DocCode - SCORE

SCORE Placeholder Sheet for IFW Content

Application Number: 18527226 Document Date: 12/01/2023

The presence of this form in the IFW record indicates that the following document type was received in electronic format on the date identified above. This content is stored in the SCORE database.

Since this was an electronic submission, there is no physical artifact folder, no artifact folder is recorded in PALM, and no paper documents or physical media exist. The TIFF images in the IFW record were created from the original documents that are stored in SCORE.

- Drawing

At the time of document entry (noted above):

- USPTO employees may access SCORE content via DAV or via the SCORE web page.
- External customers may access SCORE content via PAIR using the Supplemental Content tab.

Form Revision Date: March 1, 2019

Samsara EX1002
Samsara v. Motive Tech. Inc.
IPR2026-00034

PTO/AIA/14 (02-18)
Approved for use through 11/30/2020. OMB 0651-0032
U.S. Patent and Trademark Office; U.S. DEPARTMENT OF COMMERCE
Under the Paperwork Reduction Act of 1995, no persons are required to respond to a collection of information unless it contains a valid OMB control number.

Application Data Sheet 37 CFR 1.76	Attorney Docket Number	189908.000302
	Application Number	
Title of Invention	CAMERA INITIALIZATION FOR LANE DETECTION AND DISTANCE ESTIMATION USING SINGLE-VIEW GEOMETRY	

The application data sheet is part of the provisional or nonprovisional application for which it is being submitted. The following form contains the bibliographic data arranged in a format specified by the United States Patent and Trademark Office as outlined in 37 CFR 1.76.
This document may be completed electronically and submitted to the Office in electronic format using the Electronic Filing System (EFS) or the document may be printed and included in a paper filed application.

Secrecy Order 37 CFR 5.2:

☐ Portions or all of the application associated with this Application Data Sheet may fall under a Secrecy Order pursuant to 37 CFR 5.2 (Paper filers only. Applications that fall under Secrecy Order may not be filed electronically.)

Inventor Information:

Inventor 1 Remove

Legal Name

Prefix	Given Name	Middle Name	Family Name	Suffix
	Ali		HASSAN	

Residence Information (Select One) ○ US Residency ◉ Non US Residency ○ Active US Military Service

City	Lahore	Country of Residence	PK

Mailing Address of Inventor:

Address 1	c/o MOTIVE TECHNOLOGIES, INC.		
Address 2	55 Hawthrone Street, 4th Floor		
City	San Francisco	**State/Province**	CA
Postal Code	94105	**Country**	US

Inventor 2 Remove

Legal Name

Prefix	Given Name	Middle Name	Family Name	Suffix
	Ahmed		ALI	

Residence Information (Select One) ○ US Residency ◉ Non US Residency ○ Active US Military Service

City	Lahore	Country of Residence	PK

Mailing Address of Inventor:

Address 1	c/o MOTIVE TECHNOLOGIES, INC.		
Address 2	55 Hawthrone Street, 4th Floor		
City	San Francisco	**State/Province**	CA
Postal Code	94105	**Country**	US

Inventor 3 Remove

Legal Name

PTO/AIA/14 (02-18)
Approved for use through 11/30/2020. OMB 0651-0032
U.S. Patent and Trademark Office; U.S. DEPARTMENT OF COMMERCE
Under the Paperwork Reduction Act of 1995, no persons are required to respond to a collection of information unless it contains a valid OMB control number.

Application Data Sheet 37 CFR 1.76	Attorney Docket Number	189908.000302
	Application Number	
Title of Invention	CAMERA INITIALIZATION FOR LANE DETECTION AND DISTANCE ESTIMATION USING SINGLE-VIEW GEOMETRY	

Prefix	Given Name	Middle Name	Family Name	Suffix
	Syed Wajahat Ali	Shah	KAZMI	

Residence Information (Select One) ○ US Residency ◉ Non US Residency ○ Active US Military Service

City	Lahore	Country of Residence [i]	PK

Mailing Address of Inventor:

Address 1	c/o MOTIVE TECHNOLOGIES, INC.		
Address 2	55 Hawthrone Street, 4th Floor		
City	San Francisco	**State/Province**	CA
Postal Code	94105	**Country** [i]	US

All Inventors Must Be Listed - Additional Inventor Information blocks may be generated within this form by selecting the **Add** button. Add

Correspondence Information:

Enter either Customer Number or complete the Correspondence Information section below.
For further information see 37 CFR 1.33(a).

☐ **An Address is being provided for the correspondence Information of this application.**

Customer Number	32361		
Email Address	njdocket@gtlaw.com	Add Email	Remove Email

Application Information:

Title of the Invention	CAMERA INITIALIZATION FOR LANE DETECTION AND DISTANCE ESTIMATION USING SINGLE-VIEW GEOMETRY		
Attorney Docket Number	189908.000302	**Small Entity Status Claimed**	☐
Application Type	Nonprovisional		
Subject Matter	Utility		
Total Number of Drawing Sheets (if any)	10	**Suggested Figure for Publication (if any)**	

Filing By Reference:

Only complete this section when filing an application by reference under 35 U.S.C. 111(c) and 37 CFR 1.57(a). Do not complete this section if application papers including a specification and any drawings are being filed. Any domestic benefit or foreign priority information must be provided in the appropriate section(s) below (i.e., "Domestic Benefit/National Stage Information" and "Foreign Priority Information").

For the purposes of a filing date under 37 CFR 1.53(b), the description and any drawings of the present application are replaced by this reference to the previously filed application, subject to conditions and requirements of 37 CFR 1.57(a).

Application number of the previously filed application	Filing date (YYYY-MM-DD)	Intellectual Property Authority or Country [i]

PTO/AIA/14 (02-18)
Approved for use through 11/30/2020. OMB 0651-0032
U.S. Patent and Trademark Office; U.S. DEPARTMENT OF COMMERCE
Under the Paperwork Reduction Act of 1995, no persons are required to respond to a collection of information unless it contains a valid OMB control number.

Application Data Sheet 37 CFR 1.76	Attorney Docket Number	189908.000302
	Application Number	
Title of Invention	CAMERA INITIALIZATION FOR LANE DETECTION AND DISTANCE ESTIMATION USING SINGLE-VIEW GEOMETRY	

Publication Information:

☐ Request Early Publication (Fee required at time of Request 37 CFR 1.219)

☐ **Request Not to Publish.** I hereby request that the attached application not be published under 35 U.S.C. 122(b) and certify that the invention disclosed in the attached application **has not and will not** be the subject of an application filed in another country, or under a multilateral international agreement, that requires publication at eighteen months after filing.

Representative Information:

Representative information should be provided for all practitioners having a power of attorney in the application. Providing this information in the Application Data Sheet does not constitute a power of attorney in the application (see 37 CFR 1.32).
Either enter Customer Number or complete the Representative Name section below. If both sections are completed the customer Number will be used for the Representative Information during processing.

Please Select One:	◉ Customer Number	○ US Patent Practitioner	○ Limited Recognition (37 CFR 11.9)
Customer Number	32361		

Domestic Benefit/National Stage Information:

This section allows for the applicant to either claim benefit under 35 U.S.C. 119(e), 120, 121, 365(c), or 386(c) or indicate National Stage entry from a PCT application. Providing benefit claim information in the Application Data Sheet constitutes the specific reference required by 35 U.S.C. 119(e) or 120, and 37 CFR 1.78.
When referring to the current application, please leave the "Application Number" field blank.

Prior Application Status	Pending		Remove
Application Number	Continuity Type	Prior Application Number	Filing or 371(c) Date (YYYY-MM-DD)
	Continuation of	17493011	2021-10-04

Additional Domestic Benefit/National Stage Data may be generated within this form by selecting the **Add** button. Add

Foreign Priority Information:

This section allows for the applicant to claim priority to a foreign application. Providing this information in the application data sheet constitutes the claim for priority as required by 35 U.S.C. 119(b) and 37 CFR 1.55. When priority is claimed to a foreign application that is eligible for retrieval under the priority document exchange program (PDX)[i] the information will be used by the Office to automatically attempt retrieval pursuant to 37 CFR 1.55(i)(1) and (2). Under the PDX program, applicant bears the ultimate responsibility for ensuring that a copy of the foreign application is received by the Office from the participating foreign intellectual property office, or a certified copy of the foreign priority application is filed, within the time period specified in 37 CFR 1.55(g)(1).

Application Data Sheet 37 CFR 1.76	Attorney Docket Number	189908.000302
	Application Number	
Title of Invention	CAMERA INITIALIZATION FOR LANE DETECTION AND DISTANCE ESTIMATION USING SINGLE-VIEW GEOMETRY	

Remove

Application Number	Country[i]	Filing Date (YYYY-MM-DD)	Access Code[i] (if applicable)

Additional Foreign Priority Data may be generated within this form by selecting the **Add** button. Add

Statement under 37 CFR 1.55 or 1.78 for AIA (First Inventor to File) Transition Applications

☐ This application (1) claims priority to or the benefit of an application filed before March 16, 2013 and (2) also contains, or contained at any time, a claim to a claimed invention that has an effective filing date on or after March 16, 2013.
NOTE: By providing this statement under 37 CFR 1.55 or 1.78, this application, with a filing date on or after March 16, 2013, will be examined under the first inventor to file provisions of the AIA.

Application Data Sheet 37 CFR 1.76	Attorney Docket Number	189908.000302
	Application Number	
Title of Invention	CAMERA INITIALIZATION FOR LANE DETECTION AND DISTANCE ESTIMATION USING SINGLE-VIEW GEOMETRY	

Authorization or Opt-Out of Authorization to Permit Access:

When this Application Data Sheet is properly signed and filed with the application, applicant has provided written authority to permit a participating foreign intellectual property (IP) office access to the instant application-as-filed (see paragraph A in subsection 1 below) and the European Patent Office (EPO) access to any search results from the instant application (see paragraph B in subsection 1 below).

Should applicant choose not to provide an authorization identified in subsection 1 below, applicant **must opt-out** of the authorization by checking the corresponding box A or B or both in subsection 2 below.

NOTE: This section of the Application Data Sheet is **ONLY** reviewed and processed with the **INITIAL** filing of an application. After the initial filing of an application, an Application Data Sheet cannot be used to provide or rescind authorization for access by a foreign IP office(s). Instead, Form PTO/SB/39 or PTO/SB/69 must be used as appropriate.

1. Authorization to Permit Access by a Foreign Intellectual Property Office(s)

A. Priority Document Exchange (PDX) - Unless box A in subsection 2 (opt-out of authorization) is checked, the undersigned hereby **grants the USPTO authority** to provide the European Patent Office (EPO), the Japan Patent Office (JPO), the Korean Intellectual Property Office (KIPO), the State Intellectual Property Office of the People's Republic of China (SIPO), the World Intellectual Property Organization (WIPO), and any other foreign intellectual property office participating with the USPTO in a bilateral or multilateral priority document exchange agreement in which a foreign application claiming priority to the instant patent application is filed, access to: (1) the instant patent application-as-filed and its related bibliographic data, (2) any foreign or domestic application to which priority or benefit is claimed by the instant application and its related bibliographic data, and (3) the date of filing of this Authorization. See 37 CFR 1.14(h)(1).

B. Search Results from U.S. Application to EPO - Unless box B in subsection 2 (opt-out of authorization) is checked, the undersigned hereby **grants the USPTO authority** to provide the EPO access to the bibliographic data and search results from the instant patent application when a European patent application claiming priority to the instant patent application is filed. See 37 CFR 1.14(h)(2).

The applicant is reminded that the EPO's Rule 141(1) EPC (European Patent Convention) requires applicants to submit a copy of search results from the instant application without delay in a European patent application that claims priority to the instant application.

2. Opt-Out of Authorizations to Permit Access by a Foreign Intellectual Property Office(s)

☐ A. Applicant **DOES NOT** authorize the USPTO to permit a participating foreign IP office access to the instant application-as-filed. If this box is checked, the USPTO will not be providing a participating foreign IP office with any documents and information identified in subsection 1A above.

☐ B. Applicant **DOES NOT** authorize the USPTO to transmit to the EPO any search results from the instant patent application. If this box is checked, the USPTO will not be providing the EPO with search results from the instant application.

NOTE: Once the application has published or is otherwise publicly available, the USPTO may provide access to the application in accordance with 37 CFR 1.14.

PTO/AIA/14 (02-18)
Approved for use through 11/30/2020. OMB 0651-0032
U.S. Patent and Trademark Office; U.S. DEPARTMENT OF COMMERCE
Under the Paperwork Reduction Act of 1995, no persons are required to respond to a collection of information unless it contains a valid OMB control number.

Application Data Sheet 37 CFR 1.76	Attorney Docket Number	189908.000302
	Application Number	
Title of Invention	CAMERA INITIALIZATION FOR LANE DETECTION AND DISTANCE ESTIMATION USING SINGLE-VIEW GEOMETRY	

Applicant Information:

Providing assignment information in this section does not substitute for compliance with any requirement of part 3 of Title 37 of CFR to have an assignment recorded by the Office.

Applicant 1 Remove

If the applicant is the inventor (or the remaining joint inventor or inventors under 37 CFR 1.45), this section should not be completed. The information to be provided in this section is the name and address of the legal representative who is the applicant under 37 CFR 1.43; or the name and address of the assignee, person to whom the inventor is under an obligation to assign the invention, or person who otherwise shows sufficient proprietary interest in the matter who is the applicant under 37 CFR 1.46. If the applicant is an applicant under 37 CFR 1.46 (assignee, person to whom the inventor is obligated to assign, or person who otherwise shows sufficient proprietary interest) together with one or more joint inventors, then the joint inventor or inventors who are also the applicant should be identified in this section.

Clear

◉ Assignee	○ Legal Representative under 35 U.S.C. 117	○ Joint Inventor
○ Person to whom the inventor is obligated to assign.	○ Person who shows sufficient proprietary interest	

If applicant is the legal representative, indicate the authority to file the patent application, the inventor is:

Name of the Deceased or Legally Incapacitated Inventor:

If the Applicant is an Organization check here. ☒

Organization Name	MOTIVE TECHNOLOGIES, INC.

Mailing Address Information For Applicant:

Address 1	55 Hawthrone Street		
Address 2	4th Floor		
City	San Francisco	**State/Province**	CA
Country	US	Postal Code	94105
Phone Number		Fax Number	
Email Address			

Additional Applicant Data may be generated within this form by selecting the Add button. Add

Assignee Information including Non-Applicant Assignee Information:

Providing assignment information in this section does not substitute for compliance with any requirement of part 3 of Title 37 of CFR to have an assignment recorded by the Office.

PTO/AIA/14 (02-18)
Approved for use through 11/30/2020. OMB 0651-0032
U.S. Patent and Trademark Office; U.S. DEPARTMENT OF COMMERCE
Under the Paperwork Reduction Act of 1995, no persons are required to respond to a collection of information unless it contains a valid OMB control number.

Application Data Sheet 37 CFR 1.76	Attorney Docket Number	189908.000302
	Application Number	
Title of Invention	CAMERA INITIALIZATION FOR LANE DETECTION AND DISTANCE ESTIMATION USING SINGLE-VIEW GEOMETRY	

Assignee 1

Complete this section if assignee information, including non-applicant assignee information, is desired to be included on the patent application publication. An assignee-applicant identified in the "Applicant Information" section will appear on the patent application publication as an applicant. For an assignee-applicant, complete this section only if identification as an assignee is also desired on the patent application publication.

Remove

If the Assignee or Non-Applicant Assignee is an Organization check here. ☐

Prefix	**Given Name**	Middle Name	**Family Name**	Suffix

Mailing Address Information For Assignee including Non-Applicant Assignee:

Address 1			
Address 2			
City		**State/Province**	
Country		Postal Code	
Phone Number		Fax Number	
Email Address			

Additional Assignee or Non-Applicant Assignee Data may be generated within this form by selecting the Add button. Add

Remove

Signature:

NOTE: This Application Data Sheet must be signed in accordance with 37 CFR 1.33(b). **However, if this Application Data Sheet is submitted with the INITIAL filing of the application and either box A or B is not checked in subsection 2 of the "Authorization or Opt-Out of Authorization to Permit Access" section, then this form must also be signed in accordance with 37 CFR 1.14(c).**

This Application Data Sheet **must** be signed by a patent practitioner if one or more of the applicants is a **juristic entity** (e.g., corporation or association). If the applicant is two or more joint inventors, this form must be signed by a patent practitioner, **all** joint inventors who are the applicant, or one or more joint inventor-applicants who have been given power of attorney (e.g., see USPTO Form PTO/AIA/81) on behalf of **all** joint inventor-applicants.

See 37 CFR 1.4(d) for the manner of making signatures and certifications.

Signature	/George Zalepa/			Date (YYYY-MM-DD)	2023-12-01
First Name	George	Last Name	Zalepa	Registration Number	72706

Additional Signature may be generated within this form by selecting the Add button. Add

PTO/AIA/14 (02-18)
Approved for use through 11/30/2020. OMB 0651-0032
U.S. Patent and Trademark Office; U.S. DEPARTMENT OF COMMERCE
Under the Paperwork Reduction Act of 1995, no persons are required to respond to a collection of information unless it contains a valid OMB control number.

Application Data Sheet 37 CFR 1.76	Attorney Docket Number	189908.000302
	Application Number	
Title of Invention	CAMERA INITIALIZATION FOR LANE DETECTION AND DISTANCE ESTIMATION USING SINGLE-VIEW GEOMETRY	

This collection of information is required by 37 CFR 1.76. The information is required to obtain or retain a benefit by the public which is to file (and by the USPTO to process) an application. Confidentiality is governed by 35 U.S.C. 122 and 37 CFR 1.14. This collection is estimated to take 23 minutes to complete, including gathering, preparing, and submitting the completed application data sheet form to the USPTO. Time will vary depending upon the individual case. Any comments on the amount of time you require to complete this form and/or suggestions for reducing this burden, should be sent to the Chief Information Officer, U.S. Patent and Trademark Office, U.S. Department of Commerce, P.O. Box 1450, Alexandria, VA 22313-1450. DO NOT SEND FEES OR COMPLETED FORMS TO THIS ADDRESS. **SEND TO: Commissioner for Patents, P.O. Box 1450, Alexandria, VA 22313-1450.**

Privacy Act Statement

The Privacy Act of 1974 (P.L. 93-579) requires that you be given certain information in connection with your submission of the attached form related to a patent application or patent. Accordingly, pursuant to the requirements of the Act, please be advised that: (1) the general authority for the collection of this information is 35 U.S.C. 2(b)(2); (2) furnishing of the information solicited is voluntary; and (3) the principal purpose for which the information is used by the U.S. Patent and Trademark Office is to process and/or examine your submission related to a patent application or patent. If you do not furnish the requested information, the U.S. Patent and Trademark Office may not be able to process and/or examine your submission, which may result in termination of proceedings or abandonment of the application or expiration of the patent.

The information provided by you in this form will be subject to the following routine uses:

1 The information on this form will be treated confidentially to the extent allowed under the Freedom of Information Act (5 U.S.C. 552) and the Privacy Act (5 U.S.C. 552a). Records from this system of records may be disclosed to the Department of Justice to determine whether the Freedom of Information Act requires disclosure of these records.

2. A record from this system of records may be disclosed, as a routine use, in the course of presenting evidence to a court, magistrate, or administrative tribunal, including disclosures to opposing counsel in the course of settlement negotiations.

3 A record in this system of records may be disclosed, as a routine use, to a Member of Congress submitting a request involving an individual, to whom the record pertains, when the individual has requested assistance from the Member with respect to the subject matter of the record.

4. A record in this system of records may be disclosed, as a routine use, to a contractor of the Agency having need for the information in order to perform a contract. Recipients of information shall be required to comply with the requirements of the Privacy Act of 1974, as amended, pursuant to 5 U.S.C. 552a(m).

5. A record related to an International Application filed under the Patent Cooperation Treaty in this system of records may be disclosed, as a routine use, to the International Bureau of the World Intellectual Property Organization, pursuant to the Patent CooperationTreaty.

6. A record in this system of records may be disclosed, as a routine use, to another federal agency for purposes of National Security review (35 U.S.C. 181) and for review pursuant to the Atomic Energy Act (42 U.S.C. 218(c)).

7. A record from this system of records may be disclosed, as a routine use, to the Administrator, General Services, or his/her designee, during an inspection of records conducted by GSA as part of that agency's responsibility to recommend improvements in records management practices and programs, under authority of 44 U.S.C. 2904 and 2906. Such disclosure shall be made in accordance with the GSA regulations governing inspection of records for this purpose, and any other relevant (i.e., GSA or Commerce) directive. Such disclosure shall not be used to make determinations about individuals.

8. A record from this system of records may be disclosed, as a routine use, to the public after either publication of the application pursuant to 35 U.S.C. 122(b) or issuance of a patent pursuant to 35 U.S.C. 151. Further, a record may be disclosed, subject to the limitations of 37 CFR 1.14, as a routine use, to the public if the record was filed in an application which became abandoned or in which the proceedings were terminated and which application is referenced by either a published application, an application open to public inspections or an issued patent.

9. A record from this system of records may be disclosed, as a routine use, to a Federal, State, or local law enforcement agency, if the USPTO becomes aware of a violation or potential violation of law or regulation.

PATENT COOPERATION TREATY

From the INTERNATIONAL SEARCHING AUTHORITY

To: GEORGE ZALEPA
GREENBERG TRAURIG, LLP
ONE VANDERBILT AVENUE
NEW YORK, NY 10017

PCT

NOTIFICATION OF TRANSMITTAL OF THE INTERNATIONAL SEARCH REPORT AND THE WRITTEN OPINION OF THE INTERNATIONAL SEARCHING AUTHORITY, OR THE DECLARATION

(PCT Rule 44.1)

	Date of mailing *(day/month/year)*
Applicant's or agent's file reference 189908.000301	**FOR FURTHER ACTION** See paragraphs 1 and 4 below
International application No. PCT/US 22/45131	International filing date *(day/month/year)* 29 September 2022 (29.09.2022)
Applicant MOTIVE TECHNOLOGIES, INC.	

1. ☒ The applicant is hereby notified that the international search report and the written opinion of the International Searching Authority have been established and are transmitted herewith.

   Filing of amendments and statement under Article 19:
   The applicant is entitled, if he so wishes, to amend the claims of the international application (see Rule 46):

   When? The time limit for filing such amendments is normally two months from the date of transmittal of the international search report.

   How? Directly to the International Bureau preferably through ePCT, or on paper to:
   The International Bureau of WIPO, 34, chemin des Colombettes, 1211 Geneva 20, Switzerland

   For more detailed instructions, see the *PCT Applicant's Guide*, International Phase, paragraphs 9.004 – 9.011.

2. ☐ The applicant is hereby notified that no international search report will be established and that the declaration under Article 17(2)(a) to that effect and the written opinion of the International Searching Authority are transmitted herewith.

3. ☐ **With regard to any protest** against payment of (an) additional fee(s) under Rule 40.2, the applicant is notified that:
   - ☐ the protest together with the decision thereon has been transmitted to the International Bureau together with any request to forward the texts of both the protest and the decision thereon to the designated Offices.
   - ☐ no decision has been made yet on the protest; the applicant will be notified as soon as a decision is made.

4. **Reminders**

   The applicant may **submit comments on an informal basis on the written opinion of the International Searching Authority** to the International Bureau. These comments will be made available to the public after international publication. The International Bureau will send a copy of such comments to all designated Offices unless an international preliminary examination report has been or is to be established.

   Shortly after the expiration of **18 months from the priority date, the international application will be published** by the International Bureau. If the applicant wishes to avoid or postpone publication, a notice of withdrawal of the international application, or of the priority claim, must reach the International Bureau before the completion of the technical preparations for international publication (Rules 90*bis*.1 and 90*bis*.3).

   Within **19 months** from the priority date, but only in respect of some designated Offices, a demand for international preliminary examination must be filed if the applicant wishes to postpone the entry into the national phase until 30 months from the priority date (in some Offices even later); otherwise, the applicant must, within 20 months from the priority date, perform the prescribed acts for **entry into the national phase** before those designated Offices. In respect of other designated Offices, the time limit of **30 months** (or later) will apply even if no demand is filed within 19 months. For details about the applicable time limits, Office by Office, see www.wipo.int/pct/en/texts/time_limits.html and the *PCT Applicant's Guide*, National Chapters.

   Within **22 months from the priority date, the applicant may request that a supplementary international search be carried out** by a different International Searching Authority that offers this service (Rule 45*bis*.1). The procedure for requesting supplementary international search is described in the *PCT Applicant's Guide*, International Phase, paragraphs 8.006-8.032.

Name and mailing address of the ISA/US Mail Stop PCT, Attn: ISA/US Commissioner for Patents P.O. Box 1450, Alexandria, Virginia 22313-1450 Facsimile No. 571-273-8300	Authorized officer Kari Rodriquez Telephone No. PCT Helpdesk: 571-272-4300

Form PCT/ISA/220 (revised January 2020)

PATENT COOPERATION TREATY

From the INTERNATIONAL SEARCHING AUTHORITY

To: GEORGE ZALEPA
GREENBERG TRAURIG, LLP
ONE VANDERBILT AVENUE
NEW YORK, NY 10017

PCT

NOTIFICATION OF TRANSMITTAL OF THE INTERNATIONAL SEARCH REPORT AND THE WRITTEN OPINION OF THE INTERNATIONAL SEARCHING AUTHORITY, OR THE DECLARATION

(PCT Rule 44.1)

Applicant's or agent's file reference 189908.000301	Date of mailing *(day/month/year)* JAN 31 2023 **FOR FURTHER ACTION** See paragraphs 1 and 4 below
International application No. PCT/US 22/45131	International filing date *(day/month/year)* 29 September 2022 (29.09.2022)
Applicant MOTIVE TECHNOLOGIES, INC.	

1. ☒ The applicant is hereby notified that the international search report and the written opinion of the International Searching Authority have been established and are transmitted herewith.

   Filing of amendments and statement under Article 19:
   The applicant is entitled, if he so wishes, to amend the claims of the international application (see Rule 46):

   When? The time limit for filing such amendments is normally two months from the date of transmittal of the international search report.

   How? Directly to the International Bureau preferably through ePCT, or on paper to:
   The International Bureau of WIPO, 34, chemin des Colombettes, 1211 Geneva 20, Switzerland

   For more detailed instructions, see the *PCT Applicant's Guide*, International Phase, paragraphs 9.004 – 9.011.

2. ☐ The applicant is hereby notified that no international search report will be established and that the declaration under Article 17(2)(a) to that effect and the written opinion of the International Searching Authority are transmitted herewith.

3. ☐ **With regard to any protest** against payment of (an) additional fee(s) under Rule 40.2, the applicant is notified that:
   ☐ the protest together with the decision thereon has been transmitted to the International Bureau together with any request to forward the texts of both the protest and the decision thereon to the designated Offices.
   ☐ no decision has been made yet on the protest; the applicant will be notified as soon as a decision is made.

4. **Reminders**

   The applicant may **submit comments on an informal basis on the written opinion of the International Searching Authority** to the International Bureau. These comments will be made available to the public after international publication. The International Bureau will send a copy of such comments to all designated Offices unless an international preliminary examination report has been or is to be established.

   Shortly after the expiration of **18 months from the priority date, the international application will be published** by the International Bureau. If the applicant wishes to avoid or postpone publication, a notice of withdrawal of the international application, or of the priority claim, must reach the International Bureau before the completion of the technical preparations for international publication (Rules 90*bis*.1 and 90*bis*.3).

   Within **19 months** from the priority date, but only in respect of some designated Offices, a demand for international preliminary examination must be filed if the applicant wishes to postpone the entry into the national phase **until 30 months** from the priority date (in some Offices even later); otherwise, the applicant must, **within 20 months** from the priority date, perform the prescribed acts for **entry into the national phase** before those designated Offices. In respect of other designated Offices, the time limit of **30 months** (or later) will apply even if no demand is filed within 19 months. For details about the applicable time limits, Office by Office, see www.wipo.int/pct/en/texts/time_limits.html and the *PCT Applicant's Guide*, National Chapters.

   Within **22 months from the priority date, the applicant may request that a supplementary international search be carried out** by a different International Searching Authority that offers this service (Rule 45*bis*.1). The procedure for requesting supplementary international search is described in the *PCT Applicant's Guide*, International Phase, paragraphs 8.006-8.032.

Name and mailing address of the ISA/US Mail Stop PCT, Attn: ISA/US Commissioner for Patents P.O. Box 1450, Alexandria, Virginia 22313-1450 Facsimile No. 571-273-8300	Authorized officer Kari Rodriquez Telephone No. PCT Helpdesk: 571-272-4300

Form PCT/ISA/220 (revised January 2020)

PATENT COOPERATION TREATY

PCT

INTERNATIONAL SEARCH REPORT

(PCT Article 18 and Rules 43 and 44)

Applicant's or agent's file reference	FOR FURTHER ACTION
189908.000301	see Form PCT/ISA/220 as well as, where applicable, item 5 below.

International application No.	International filing date *(day/month/year)*	(Earliest) Priority Date *(day/month/year)*
PCT/US 22/45131	29 September 2022 (29.09.2022)	04 October 2021 (04.10.2021)

Applicant
MOTIVE TECHNOLOGIES, INC.

This international search report has been prepared by this International Searching Authority and is transmitted to the applicant according to Article 18. A copy is being transmitted to the International Bureau.

This international search report consists of a total of 2 sheets.

☐ It is also accompanied by a copy of each prior art document cited in this report.

1. **Basis of the report**

a. With regard to the **language**, the international search was carried out on the basis of:

☒ the international application in the language in which it was filed.

☐ a translation of the international application into _____ which is the language of a translation furnished for the purposes of international search (Rules 12.3(a) and 23.1(b)).

b. ☐ This international search report has been established taking into account the **rectification of an obvious mistake** authorized by or notified to this Authority under Rule 91 (Rule 43.6*bis*(a)).

c. ☐ With regard to any **nucleotide and/or amino acid sequence** disclosed in the international application, see Box No. I.

2. ☐ **Certain claims were found unsearchable** (see Box No. II).

3. ☐ **Unity of invention is lacking** (see Box No. III).

4. With regard to the **title**,

☒ the text is approved as submitted by the applicant.

☐ the text has been established by this Authority to read as follows:

5. With regard to the **abstract**,

☒ the text is approved as submitted by the applicant.

☐ the text has been established, according to Rule 38.2, by this Authority as it appears in Box No. IV. The applicant may, within one month from the date of mailing of this international search report, submit comments to this Authority.

6. With regard to the **drawings**,

a. the figure of the drawings to be published with the abstract is Figure No. 1

☒ as suggested by the applicant.

☐ as selected by this Authority, because the applicant failed to suggest a figure.

☐ as selected by this Authority, because this figure better characterizes the invention.

b. ☐ none of the figures is to be published with the abstract.

INTERNATIONAL SEARCH REPORT

International application No.
PCT/US 22/45131

A. CLASSIFICATION OF SUBJECT MATTER

IPC - INV. B60W 40/00 (2022.01)
ADD. G06T 7/33 (2022.01)

CPC - INV. B06W 40/00
ADD. G06T 7/33, G05D 1/021

According to International Patent Classification (IPC) or to both national classification and IPC

B. FIELDS SEARCHED

Minimum documentation searched (classification system followed by classification symbols)
See Search History document

Documentation searched other than minimum documentation to the extent that such documents are included in the fields searched
See Search History document

Electronic data base consulted during the international search (name of data base and, where practicable, search terms used)
See Search History document

C. DOCUMENTS CONSIDERED TO BE RELEVANT

Category*	Citation of document, with indication, where appropriate, of the relevant passages	Relevant to claim No.
X --- Y	US 2021/0049780 A1 (FIVE AI LIMITED), 18 February 2021 (18.02.2021), entire document, especially Abstract; para [0007], [0062], [0069], [0131], [0145], [0150], [0190], [0240], [0291], [0307], [0316], [0323], [0331], [0359]-[0360]	1-12, 14, 17, 19-20 --- 13, 15-16, 18
Y	US 2019/0228266 A1 (QUALCOMM INCORPORATED), 25 July 2019 (25.07.2019), entire document, especially Abstract; para [0036]-[0037], [0046], [0070]	13, 15-16
Y	US 2021/0009166 A1 (UATC, LLC), 14 January 2021 (14.01.2021), entire document, especially Abstract; para [0034]	18

☐ Further documents are listed in the continuation of Box C. ☐ See patent family annex.

* Special categories of cited documents:
"A" document defining the general state of the art which is not considered to be of particular relevance
"D" document cited by the applicant in the international application
"E" earlier application or patent but published on or after the international filing date
"L" document which may throw doubts on priority claim(s) or which is cited to establish the publication date of another citation or other special reason (as specified)
"O" document referring to an oral disclosure, use, exhibition or other means
"P" document published prior to the international filing date but later than the priority date claimed
"T" later document published after the international filing date or priority date and not in conflict with the application but cited to understand the principle or theory underlying the invention
"X" document of particular relevance; the claimed invention cannot be considered novel or cannot be considered to involve an inventive step when the document is taken alone
"Y" document of particular relevance; the claimed invention cannot be considered to involve an inventive step when the document is combined with one or more other such documents, such combination being obvious to a person skilled in the art
"&" document member of the same patent family

Date of the actual completion of the international search	Date of mailing of the international search report
27 December 2022 (27.12.2022)	JAN 31 2023
Name and mailing address of the ISA/US Mail Stop PCT, Attn: ISA/US, Commissioner for Patents P.O. Box 1450, Alexandria, Virginia 22313-1450 Facsimile No. 571-273-8300	Authorized officer Kari Rodriquez Telephone No. PCT Helpdesk: 571-272-4300

Form PCT/ISA/210 (second sheet) (July 2022)

PATENT COOPERATION TREATY

From the
INTERNATIONAL SEARCHING AUTHORITY

To: GEORGE ZALEPA
GREENBERG TRAURIG, LLP
ONE VANDERBILT AVENUE
NEW YORK, NY 10017

PCT

WRITTEN OPINION OF THE
INTERNATIONAL SEARCHING AUTHORITY

(PCT Rule 43*bis*.1)

Date of mailing *(day/month/year)*	JAN 31 2023
Applicant's or agent's file reference 189908.000301	**FOR FURTHER ACTION** See paragraph 2 below

International application No.	International filing date *(day/month/year)*	Priority date *(day/month/year)*
PCT/US 22/45131	29 September 2022 (29.09.2022)	04 October 2021 (04.10.2021)

International Patent Classification (IPC) or both national classification and IPC

IPC - INV. B60W 40/00 (2022.01)
ADD. G06T 7/33 (2022.01)
CPC - INV. B06W 40/00
ADD. G06T 7/33, G05D 1/021

Applicant MOTIVE TECHNOLOGIES, INC.

1. This opinion contains indications relating to the following items:

- [X] Box No. I Basis of the opinion
- [ ] Box No. II Priority
- [ ] Box No. III Non-establishment of opinion with regard to novelty, inventive step and industrial applicability
- [ ] Box No. IV Lack of unity of invention
- [X] Box No. V Reasoned statement under Rule 43*bis*.1(a)(i) with regard to novelty, inventive step and industrial applicability; citations and explanations supporting such statement
- [ ] Box No. VI Certain documents cited
- [ ] Box No. VII Certain defects in the international application
- [ ] Box No. VIII Certain observations on the international application

2. **FURTHER ACTION**

If a demand for international preliminary examination is made, this opinion will be considered to be a written opinion of the International Preliminary Examining Authority ("IPEA") except that this does not apply where the applicant chooses an Authority other than this one to be the IPEA and the chosen IPEA has notified the International Bureau under Rule 66.1*bis*(b) that written opinions of this International Searching Authority will not be so considered.

If this opinion is, as provided above, considered to be a written opinion of the IPEA, the applicant is invited to submit to the IPEA a written reply together, where appropriate, with amendments, before the expiration of 3 months from the date of mailing of Form PCT/ISA/220 or before the expiration of 22 months from the priority date, whichever expires later.

For further options, see Form PCT/ISA/220.

Name and mailing address of the ISA/US	Date of completion of this opinion	Authorized officer
Mail Stop PCT, Attn: ISA/US Commissioner for Patents P.O. Box 1450, Alexandria, Virginia 22313-1450 Facsimile No. 571-273-8300	27 December 2022 (27.12.2022)	Kari Rodriquez PCT Help Desk Telephone No. 571-272-4300

Form PCT/ISA/237 (cover sheet) (revised July 2022)

WRITTEN OPINION OF THE
INTERNATIONAL SEARCHING AUTHORITY

International application No.
PCT/US 22/45131

Box No. I Basis of this opinion

1. With regard to the **language**, this opinion has been established on the basis of:

   ☒ the international application in the language in which it was filed.

   ☐ a translation of the international application into _____ which is the language of a translation furnished for the purposes of international search (Rules 12.3(a) and 23.1(b)).

2. ☐ This opinion has been established taking into account the **rectification of an obvious mistake** authorized by or notified to this Authority under Rule 91 (Rule 43*bis*.1(b)).

3. ☐ With regard to any **nucleotide and/or amino acid sequence** disclosed in the international application, this opinion has been established on the basis of a sequence listing:

   a. ☐ forming part of the international application as filed.

   b. ☐ furnished subsequent to the international filing date for the purposes of international search (Rule 13ter.1(a)).

      ☐ accompanied by a statement to the effect that the sequence listing does not go beyond the disclosure in the international application as filed.

4. ☐ With regard to any nucleotide and/or amino acid sequence disclosed in the international application, this opinion has been established to the extent that a meaningful opinion could be formed without a WIPO Standard ST.26 compliant sequence listing.

5. Additional comments:

WRITTEN OPINION OF THE INTERNATIONAL SEARCHING AUTHORITY

International application No.
PCT/US 22/45131

Box No. V **Reasoned statement under Rule 43*bis*.1(a)(i) with regard to novelty, inventive step and industrial applicability; citations and explanations supporting such statement**

1. Statement

Novelty (N)	Claims	13, 15-16, 18	YES
	Claims	1-12, 14, 17, 19-20	NO
Inventive step (IS)	Claims	None	YES
	Claims	1-20	NO
Industrial applicability (IA)	Claims	1-20	YES
	Claims	None	NO

2. Citations and explanations:

Claims 1-12, 14, 17 and 19-20 lack novelty under PCT Article 33(2) as being anticipated by US 2021/0049780 A1 to FIVE AI LIMITED (hereinafter 'Five').

As to claim 1, Five teaches a method comprising: receiving, over a network from a camera device, a video comprising a set of image frames ("these images are captured as frames of short video segments recorded as the vehicle 300 drives along a road," para [0145]); identifying one or more lines in the video using a predictive model, the one or more lines including a horizon line ("The relative orientation of the camera can be captured as a "forward point" and "horizon line", as defined below," para [0190]; "Any feature in the video that is parallel to the path followed can benefit from the same speed up in annotation and single click addition by the human annotator...For example, the road markings can be annotated in this way. Both in position and type. Including centre dashed or solid lines, road edge lines, double yellow lines etc. For example, cycle lanes can be added in this way, as can pavements," para [0323]); computing at least one camera parameter based on the one or more lines ("At run time a variant of the approach proposed by [33] was followed, predicting an embedding per pixel. The prediction of Road was used to filter away pixels which are not likely to be lanes," para [0360]); overlaying the one or more lines on the video to generate an overlaid video ("The rendering component can render data of any one of the captured images on a display of the user interface 412, overlaid with its associated annotation data A(n)," para [0307]; para [0323]); transmitting the overlaid video to an annotator device for manual review ("Any feature in the video that is parallel to the path followed can benefit from the same speed up in annotation and single click addition by the human annotator...For example, the road markings can be annotated in this way. Both in position and type. Including centre dashed or solid lines, road edge lines, double yellow lines etc. For example, cycle lanes can be added in this way, as can pavements," para [0323]); receiving a confirmation from the annotator device, the confirmation indicating that the one or more lines are accurate ("The user can then cycle through the following images, quickly verifying that everything still matches up," para [0316]; "Another benefit of this technique is that the human can choose to annotate an object in an image in the video when the camera is close to it (i.e. when the object is large). This accurate annotation is then propagated to all images even when the object is small within the image...Since there is a 3D model underlying the whole sequence of images in the video, then annotations automatically generated when the object is more distant from the camera will have the accuracy of annotation when the object was large and annotated by a human. This can often be more accurate than could be achieved by a human trying to annotate the small image of the object," para [0331]); and transmitting data representing the at least one camera parameter to the camera device ("a rendering component configured to render at least one of the images and its two-dimensional image annotation data via a user interface; and a model adaptation component configured to adapt the three-dimensional structure model according to instructions received via the user interface, wherein the annotation component is configured to modify the two-dimensional image annotation data for each of the captured images based on the adapted three-dimensional structure model," para [0062]).

As to claim 2, Five teaches the method of claim 1, wherein the one or more lines includes at least one lane line of a roadway ("The modelling component may be configured to assign one of the following labels to the expected parallel structure: a road label, a lane label, a non-drivable label, an ego lane label, a non-ego lane label, a cycle or bus lane label, a parallel road marking or boundary label," para [0069]).

As to claim 3, Five teaches the method of claim 1, wherein computing the at least one camera parameter comprises predicting the at least one camera parameter using the predictive model ("At run time a variant of the approach proposed by [33] was followed, predicting an embedding per pixel. The prediction of Road was used to filter away pixels which are not likely to be lanes," para [0360]).

As to claim 4, Five teaches the method of claim 1, wherein computing the at least one camera parameter comprises predicting the at least one camera parameter using a second predictive model ("a model was trained based on [33], adopting their approach of learning per pixel embeddings whose value is optimised such that pixels within the same training instance are given similar embeddings, while the mean embedding of separate instances are simultaneously pushed apart. A cost function which learns such pixel embeddings can be written down exactly and is presented in Equations 1-4 of [33]. For comparison, the the same hyper parameters reported in that work were used. This loss was imposed as an extra output of a Road/Non-Road SegNet model trained alongside the segmentation task from scratch...At run time a variant of the approach proposed by [33] was followed, predicting an embedding per pixel. The prediction of Road was used to filter away pixels which are not likely to be lanes. Pixels were then uniformly sampled in the road area and their embeddings were clustered using the Mean Shift [37] algorithm, identifying the centres of the detected lane instances. Finally, all pixels in the road area are assigned to a single lane instance using the Euclidean distance," para [0359]-[0360]).

(PLEASE SEE SUPPLEMENTAL BOX)

Supplemental Box

In case the space in any of the preceding boxes is not sufficient.
Continuation of:
Box V.2 - Citations and explanations:

As to claim 5, Five teaches the method of claim 1, wherein the at least one camera parameter comprises a camera height and road plane normal ("FIG. 27 shows the principles of the estimation of the lane border points bi left, bi right at frame i. ci is the camera position at frame i (obtained via SfM), f is the forward direction and n is the normal vector of the road plane (both relative to the camera orientation), h is the height of the camera above the road, r is the horizontal vector across the lane and wi left, wi right are the distances to the left and right ego -lane borders," para [0150]).

As to claim 6, Five teaches the method of claim 1, further comprising: receiving, over the network from the camera device, a second video comprising a second set of images ("FIG. 17 shows an image of a SLAM reconstruction of camera positions moving through a point cloud world, where there are two sets of camera images," para [0291]); transmitting the second video to the annotator device for manual review (para [0323]); adding, by the annotator device, one or more lines to the second video to generate a second overlaid video (para [0307], [0323]); predicting, using the one or more lines in the second overlaid video, at least one camera parameter (para [0190], [0323]); and transmitting the at least one camera parameter to the annotator device (para [0062]).

As to claim 7, Five teaches the method of claim 6, further comprising: receiving a second confirmation from the annotator device, the second confirmation indicating that the at least one camera parameter are accurate (para [0316], [0331]); and transmitting data representing the one or more lines of the second video to the camera device (para [0062], [0323]).

As to claim 8, Five teaches a method comprising: receiving a video, the video comprising one or more image frames (para [0145]); generating a set of intermediate features representing the video using a backbone network ("The detection component 102 takes as an input image data of a street scene image, labelled i, and generates an output y(i) where y is a function defined by a set of model parameters of the detection component 102. This can be in the form of a feature vector derived from the image, which can be formed of raw or transformed pixel values for example," para [0131]; "By identifying distinctive reference features that appear within the images---such as those labelled F1 and F2---and matching them up across the images, triangulation can then be used to construct a 3D model of those features, as illustrated in the lower part of FIG. 7," para [0240]); inputting the set of intermediate features into a lane or horizon prediction head, the lane or horizon prediction head comprising a neural network (para [0190], [0323]); predicting a horizon line using the lane or horizon prediction head, the horizon line comprising a set of horizon markers (para [0190], [0323]); and using the horizon line to compute at least one camera parameter (para [0190], [0360]).

As to claim 9, Five teaches the method of claim 8, the backbone network comprising at least one convolutional layer ("Such images can for example be used to prepare a very large training set of annotated road images suitable for training a convolutional neural network (CNN) or other state-of-the-art machine learning (ML) structure detection component," para [0007]).

As to claim 10, Five teaches the method of claim 8, wherein the at least one camera parameter comprises one of a camera height, camera angle, and road plane normal (para [0150]).

As to claim 11, Five teaches the method of claim 8, further comprising predicting, using the lane or horizon prediction head, at least one lane line, the at least one lane line comprising a set of lane line markers (para [0069]).

As to claim 12, Five teaches the method of claim 11, wherein generating a plurality of lane key points comprises generating a plurality of lane key points for two lane lines on a roadway ("In order generate the lane position and project it back into each image, as indicated above the following need to be known or deduced," para [0229]).

As to claim 14, Five teaches the method of claim 8, wherein the lane or horizon prediction head comprises at least one convolutional layer (para [0007]).

As to claim 17, Five teaches a method comprising: receiving a video, the video comprising one or more image frames (para [0145]); generating a set of intermediate features representing the video using a backbone network (para [0131], [0240]); inputting the set of intermediate features into a camera parameter estimation head, the camera parameter estimation head comprising a neural network (para [0190], [0323]); and predicting at least one camera parameter using the camera parameter estimation head, the camera parameter estimation head trained using an output of the backbone network and an output of a lane and horizon line prediction head (para [0190], [0323]).

As to claim 19, Five teaches the method of claim 17, further comprising predicting a horizon line using the lane and horizon line prediction head, the lane and horizon line prediction head comprising a neural network configured to receive the set of intermediate features as an input (para [0190], [0323]).

As to claim 20, Five teaches the method of claim 17, wherein the camera parameter estimation head comprises at least one convolutional layer (para [0007]).

(PLEASE SEE NEXT SUPPLEMENTAL BOX)

Supplemental Box

In case **the space in any of the preceding boxes is not sufficient.**
Continuation of:
Box V.2 - Citations and explanations:

Claims 13, 15-16 lack an inventive step under PCT Article 33(3) as being obvious over Five in view of US 2019/0228266 A1 to QUALCOMM INCORPORATED (hereinafter 'Qualcomm').

As to claim 13, Five teaches the method of claim 8, but fails to explicitly teach such a method further comprising detecting a movement of a camera that captured the video and re-initializing the at least one camera parameter in response. However, Qualcomm teaches such a method further comprising detecting a movement of a camera that captured the video and re-initializing the at least one camera parameter in response ("the object tracker may fail due to various conditions, such as, for example, unstable lighting, erratic movement by a target, movement of a tracking camera, clutter in a frame, and/or occlusion of the target. Failure may cause the object tracker to search an incorrect region. The failure may be propagated over time such that if an object is lost at a frame t, the tracker may not find the object in a subsequent frame t+1, as well as a later frame t+n. That is, based on an initial tracking failure, the object tracker may lose track of the target. In conventional systems, a substantial period of time may pass between a failure time and a failure detection time...Because a substantial period of time may elapse before an object tracker recovers from the initial tracking failure, it is desirable to reduce an amount of time for determining a tracking failure. Aspects of the present disclosure are directed to detecting a tracking failure and initializing a recovery mode in response to the detected failure. The recovery mode may re-initialize the target and the search regions," para [0036]-[0037]). It would have been obvious to one of ordinary skill in the art to combine the neural network feature detection system of Five with the support for re-initializing a camera of Qualcomm, because such systems and methods allow for recovering from tracking errors caused by repositioned cameras (Qualcomm: para [0036]-[0037]). Furthermore, both Five and Qualcomm are directed to systems and methods for neural network image analysis.

As to claim 15, Five teaches the method of claim 14, but fails to explicitly teach such a method wherein the lane or horizon prediction head further comprises at least one fully connected layer receiving an output of the convolutional layer. However, Qualcomm teaches such a method wherein the lane or horizon prediction head further comprises at least one fully connected layer receiving an output of the convolutional layer ("the connections between layers of a neural network may be fully connected 502 or locally connected 504," para [0046]). It would have been obvious to one of ordinary skill in the art to combine the neural network feature detection system of Five with the support for fully-connected layers of Qualcomm, because such systems and methods allow for providing multiple types of connected layers in a neural network (Qualcomm: para [0046]). Furthermore, both Five and Qualcomm are directed to systems and methods for neural network image analysis.

As to claim 16, Five teaches the method of claim 14, but fails to explicitly teach such a method wherein the lane or horizon prediction head further comprises a layer selected from the group consisting of a recurrent neural network layer, long short-term memory layer, and gated recurrent unit layer. However, Qualcomm teaches such a method wherein the lane or horizon prediction head further comprises a layer selected from the group consisting of a recurrent neural network layer, long short-term memory layer, and gated recurrent unit layer ("The failure detection network 904 may be a trained binary classifier. In this configuration, based on the received feature maps, the failure detection network 904 determines whether tracking has failed. That is, the failure detection network 904 may classify the tracking as failed or successful. In one configuration, the failure detection network 904 is a convolutional neural network, such as a shallow convolutional neural network. In another embodiment, the failure detection network 904 is a recurrent convolutional neural network," para [0070]). It would have been obvious to one of ordinary skill in the art to combine the neural network feature detection system of Five with the support for recurrent layers of Qualcomm, because such systems and methods allow for providing multiple types of neural networks (Qualcomm: para [0070]). Furthermore, both Five and Qualcomm are directed to systems and methods for neural network image analysis.

Claim 18 lacks an inventive step under PCT Article 33(3) as being obvious over Five in view of US 2021/0009166 A1 to UATC, LLC (hereinafter 'UATC').

As to claim 18, Five teaches the method of claim 17, but fails to explicitly teach such a method wherein the backbone network, camera parameter estimation head, lane and horizon line prediction head are trained using a joint loss function, the joint loss function aggregating the losses of the lane and horizon line prediction head and the neural network. However, UATC teaches such a method wherein the backbone network, camera parameter estimation head, lane and horizon line prediction head are trained using a joint loss function, the joint loss function aggregating the losses of the lane and horizon line prediction head and the neural network ("errors can be sequentially back-propagated through each of the object detection model, the interaction model, and the recurrent model to evaluate a joint loss function. A gradient of the joint loss function can be calculated to adjust the parameter(s) to reduce the joint loss function to jointly train the models," para [0034]). It would have been obvious to one of ordinary skill in the art to combine the neural network feature detection system of Five with the support for joint loss functions of UATC, because such systems and methods allow for calculating a joint loss to help refine a neural network (UATC: para [0034]). Furthermore, both Five and UATC are directed to systems and methods for neural network image analysis.

Claims 1-20 have industrial applicability as defined by PCT Article 33(4) because the subject matter can be made or used in industry.

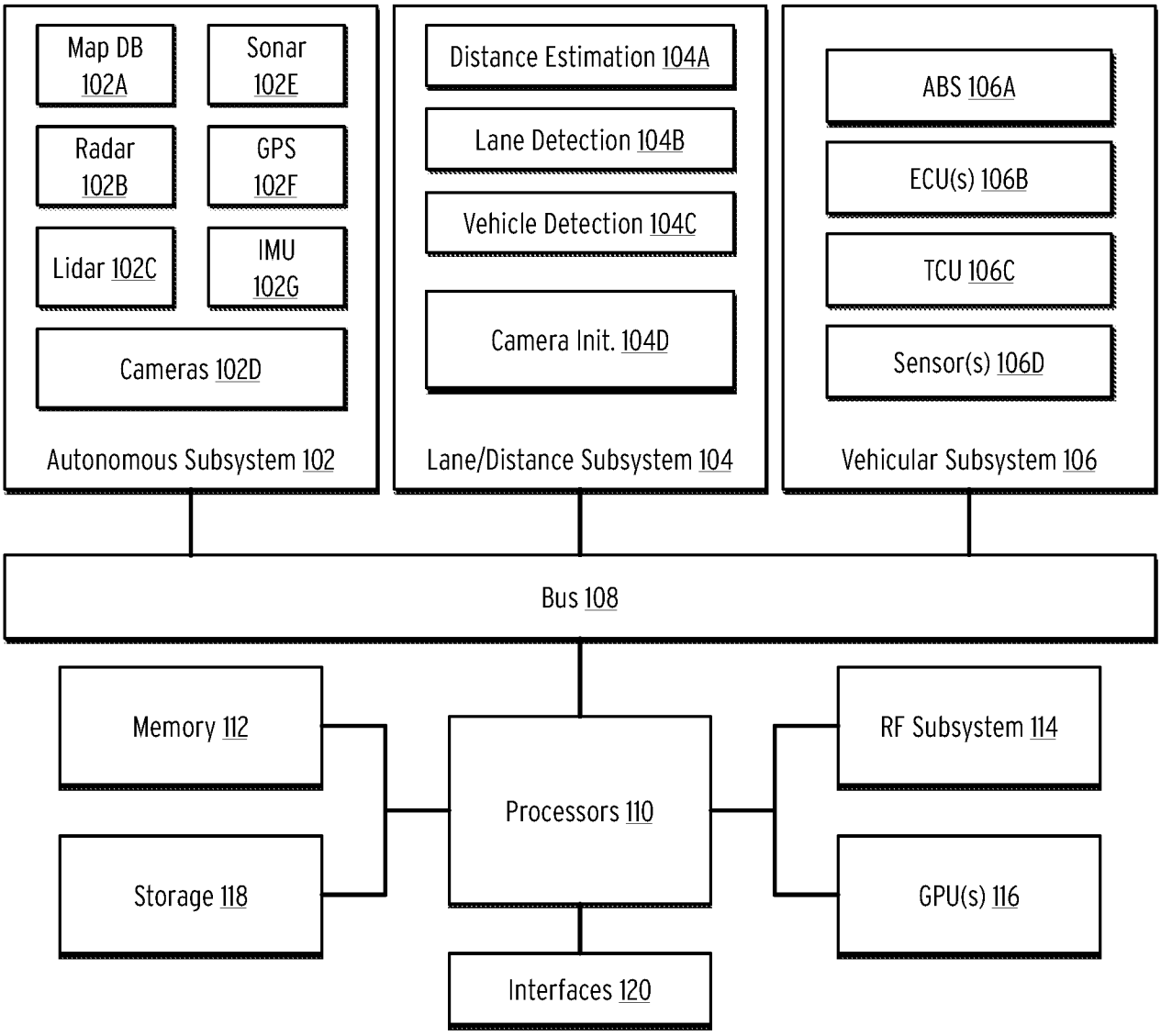
Map DB 102A
Sonar 102E
Radar 102B
GPS 102F
Lidar 102C
IMU 102G
Cameras 102D
Autonomous Subsystem 102
Distance Estimation 104A
Lane Detection 104B
Vehicle Detection 104C
Camera Init. 104D
Lane/Distance Subsystem 104
ABS 106A
ECU(s) 106B
TCU 106C
Sensor(s) 106D
Vehicular Subsystem 106
Bus 108
Memory 112
Storage 118
Processors 110
Interfaces 120
RF Subsystem 114
GPU(s) 116

FIG. 1

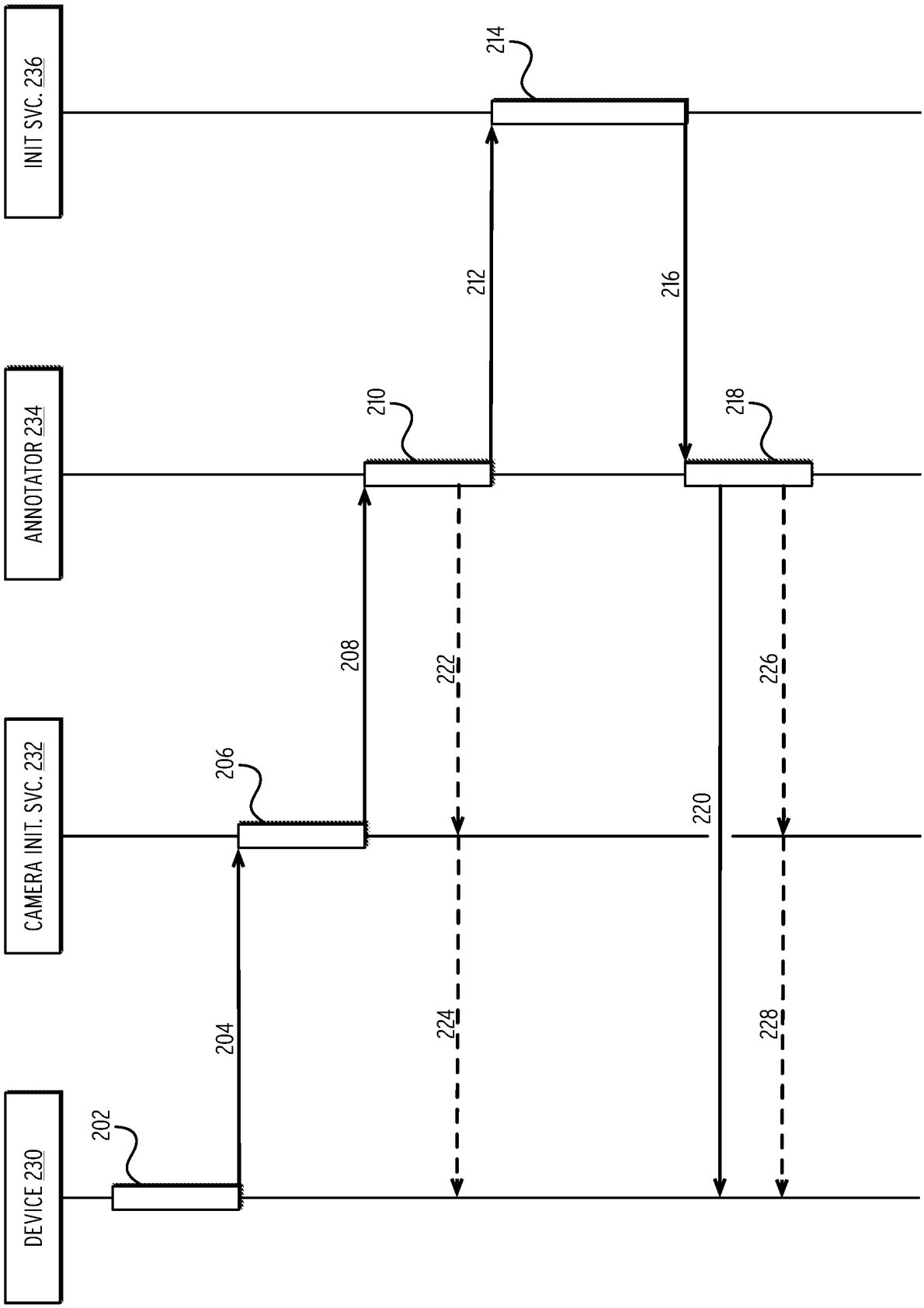
INIT SVC. 236
ANNOTATOR 234
CAMERA INIT. SVC. 232
DEVICE 230
202
204
206
208
210
212
214
216
218
220
222
224
226
228

FIG. 2

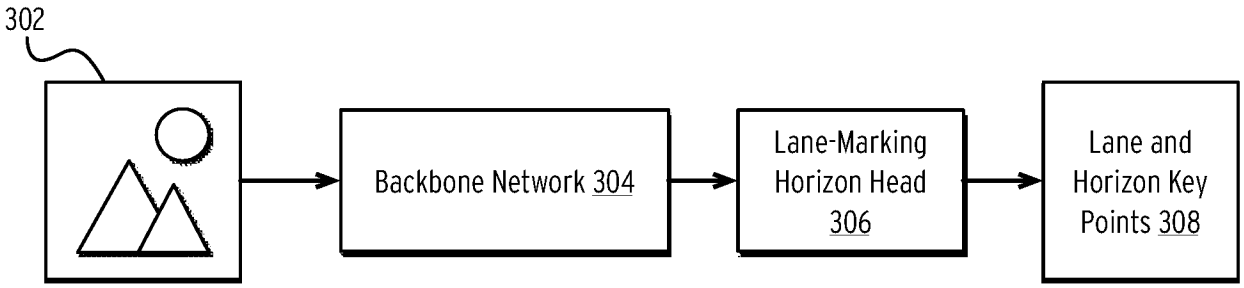

FIG. 3A

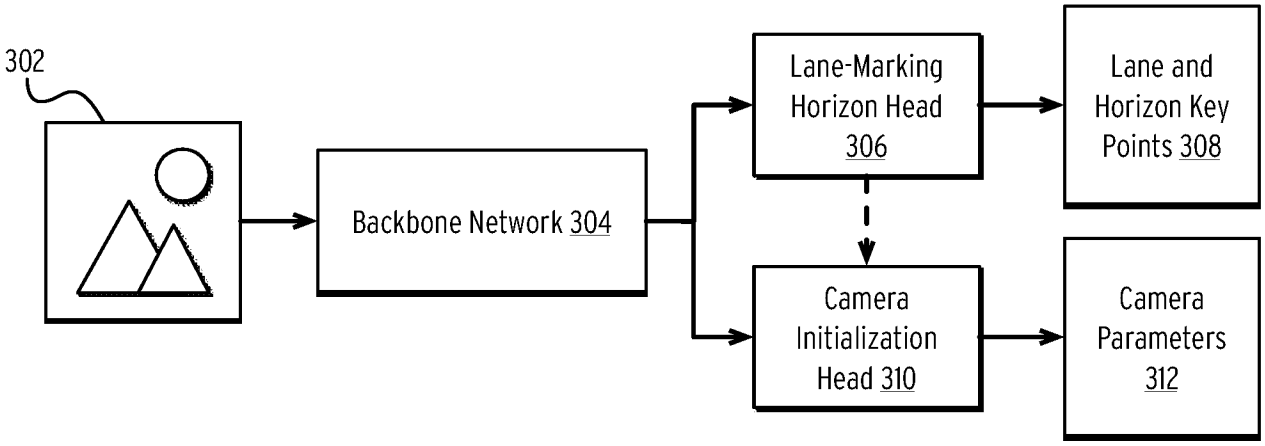

FIG. 3B

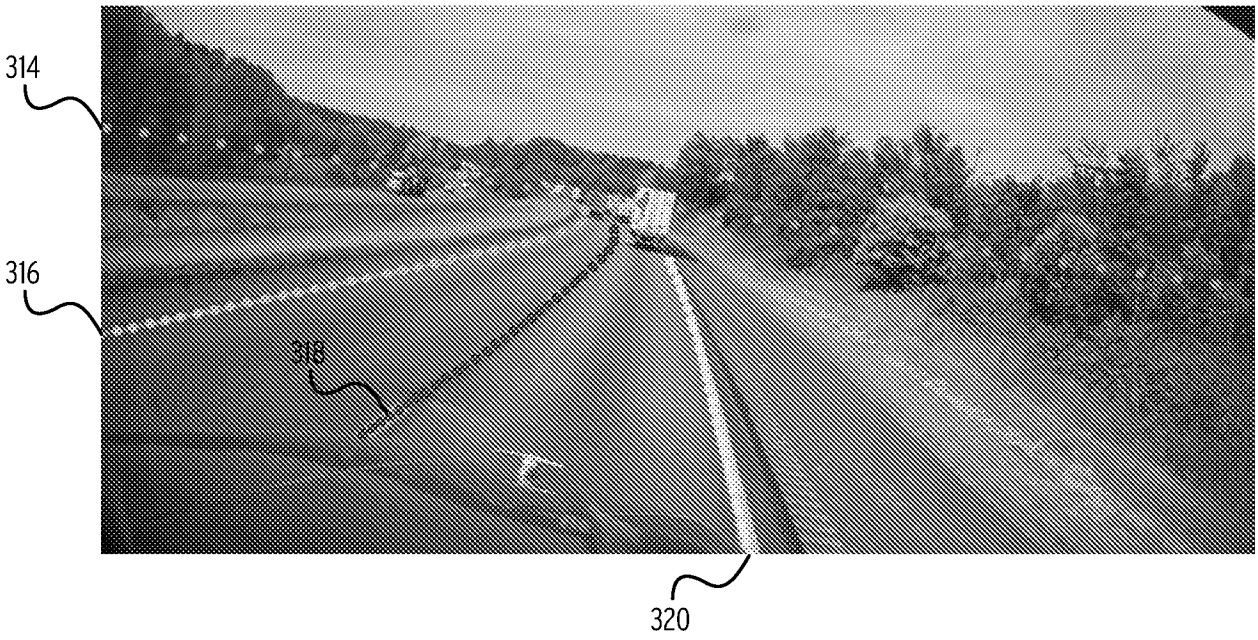

FIG. 3C

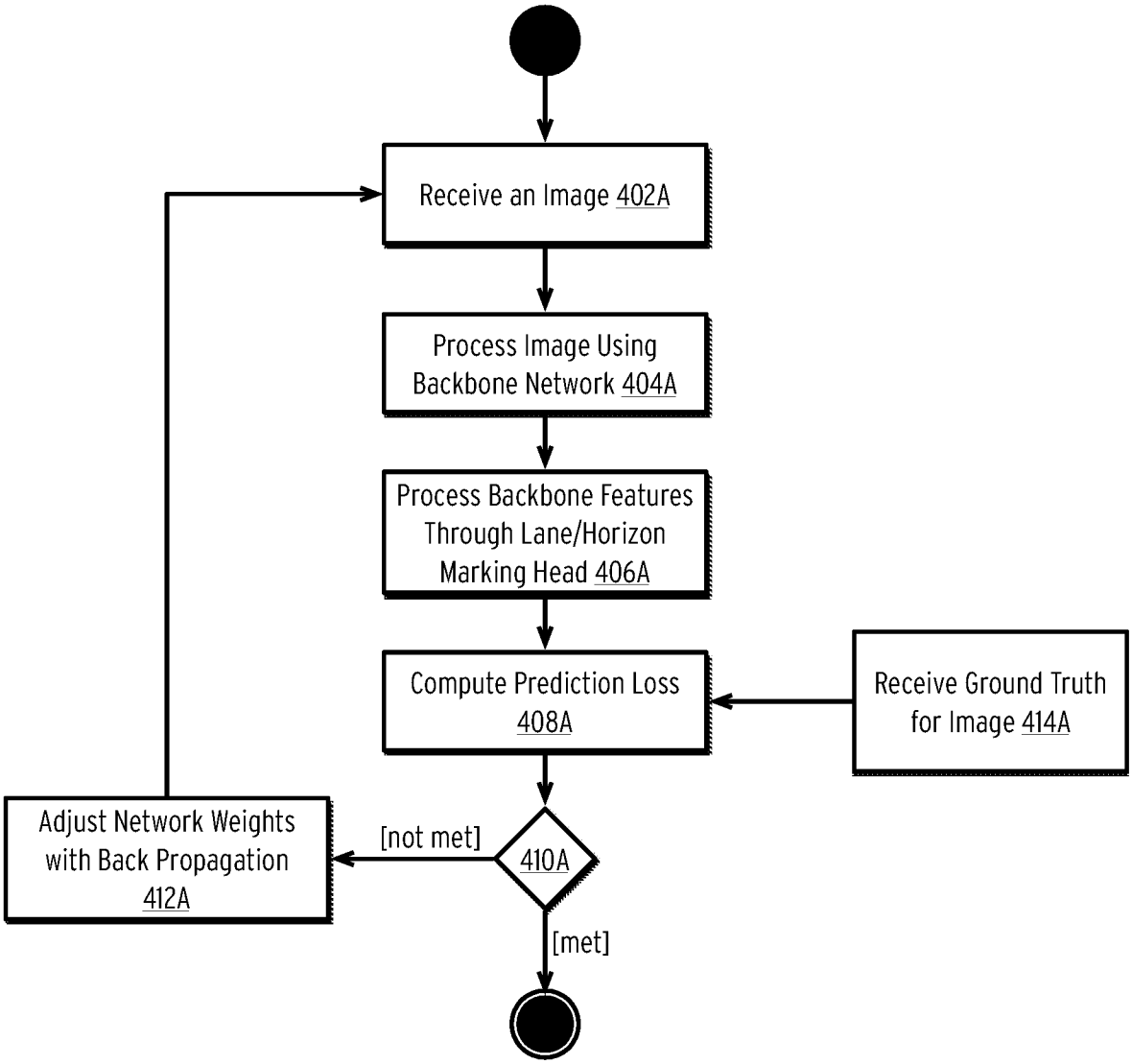
Receive an Image 402A
Process Image Using Backbone Network 404A
Process Backbone Features Through Lane/Horizon Marking Head 406A
Compute Prediction Loss 408A
Receive Ground Truth for Image 414A
410A
[not met]
[met]
Adjust Network Weights with Back Propagation 412A

FIG. 4A

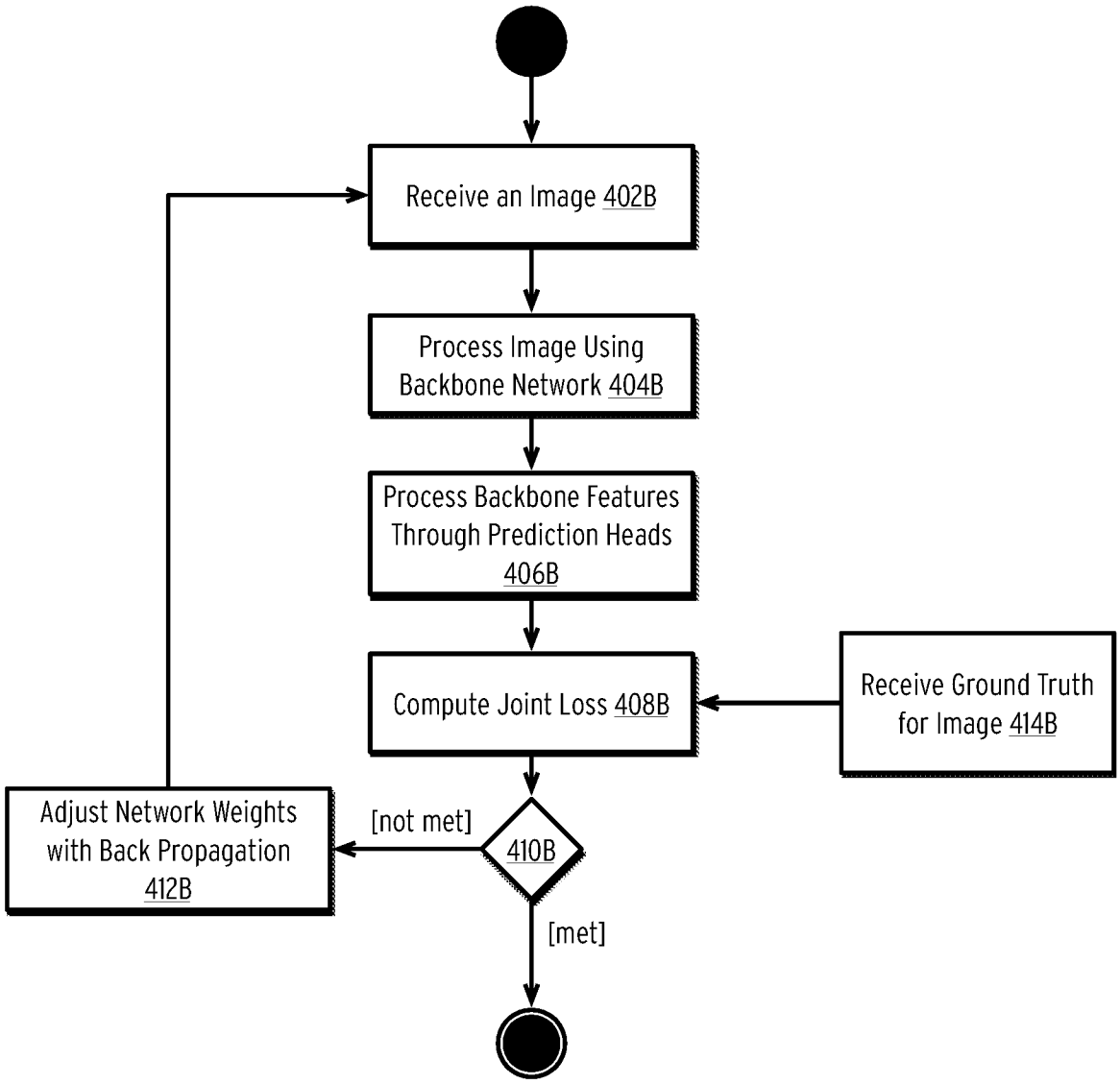
Receive an Image 402B
Process Image Using Backbone Network 404B
Process Backbone Features Through Prediction Heads 406B
Compute Joint Loss 408B
Receive Ground Truth for Image 414B
410B
[not met]
Adjust Network Weights with Back Propagation 412B
[met]

FIG. 4B

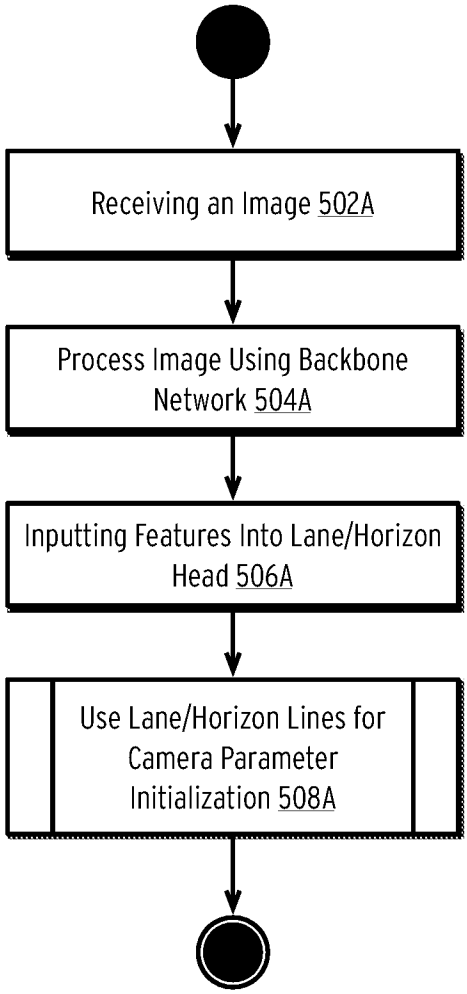
Receiving an Image 502A
Process Image Using Backbone Network 504A
Inputting Features Into Lane/Horizon Head 506A
Use Lane/Horizon Lines for Camera Parameter Initialization 508A

FIG. 5A

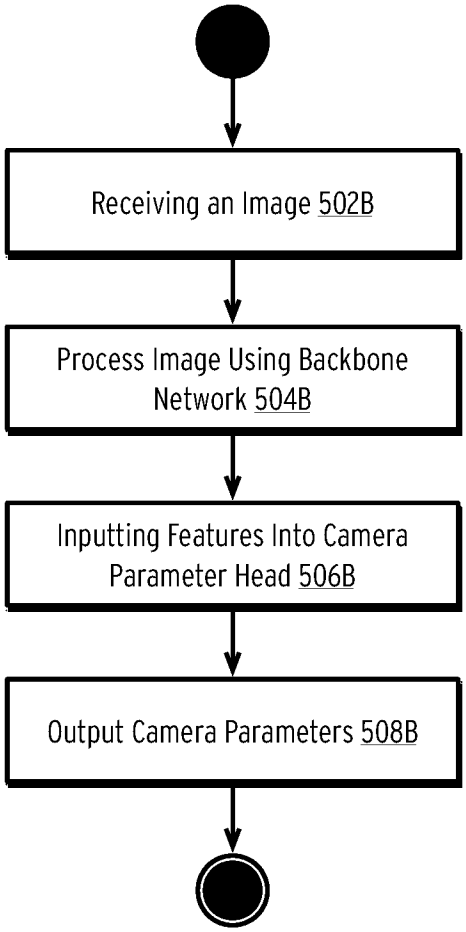
Receiving an Image 502B
Process Image Using Backbone Network 504B
Inputting Features Into Camera Parameter Head 506B
Output Camera Parameters 508B

FIG. 5B

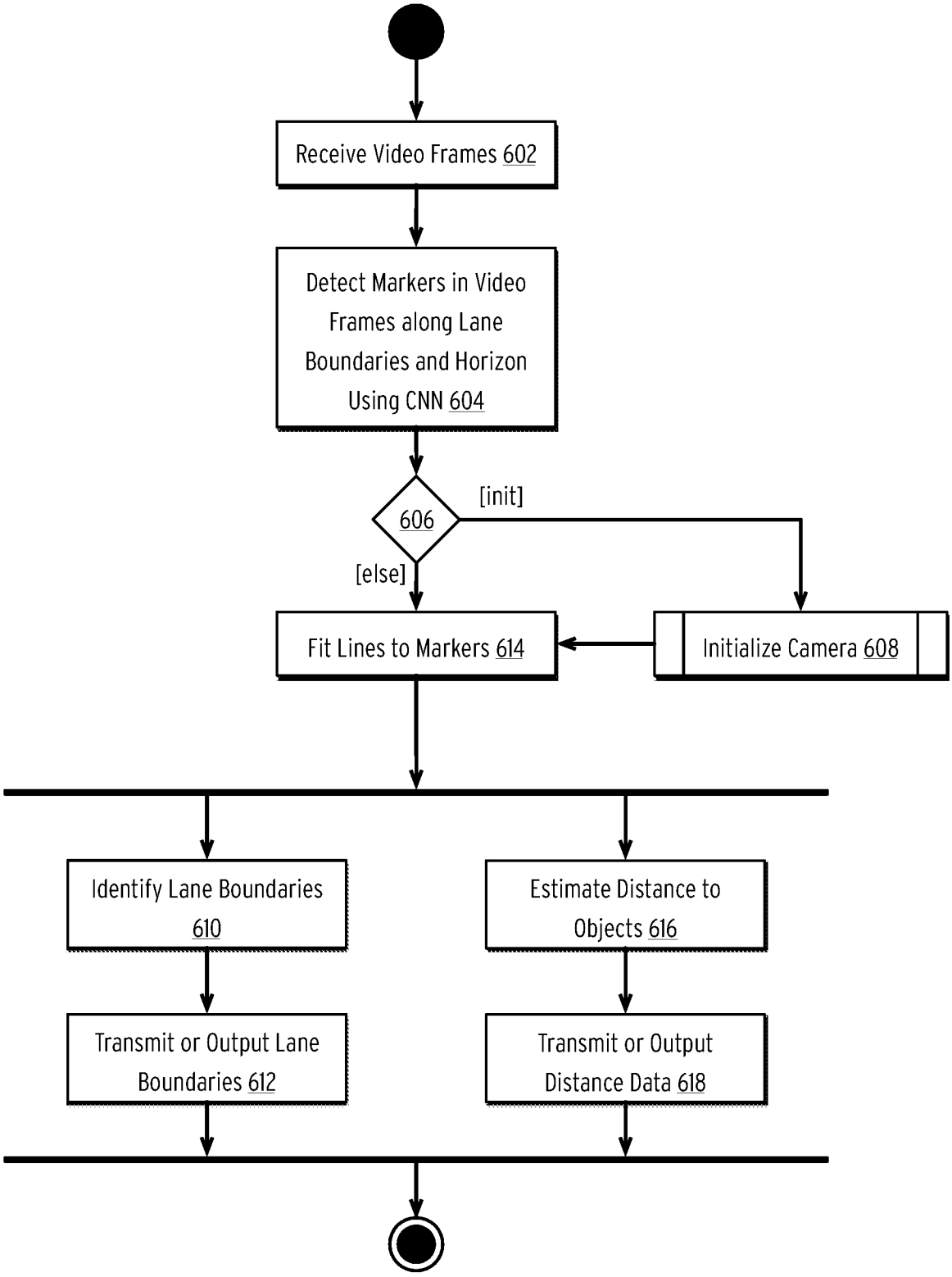
Receive Video Frames 602
Detect Markers in Video Frames along Lane Boundaries and Horizon Using CNN 604
606
[init]
[else]
Initialize Camera 608
Fit Lines to Markers 614
Identify Lane Boundaries 610
Estimate Distance to Objects 616
Transmit or Output Lane Boundaries 612
Transmit or Output Distance Data 618

FIG. 6

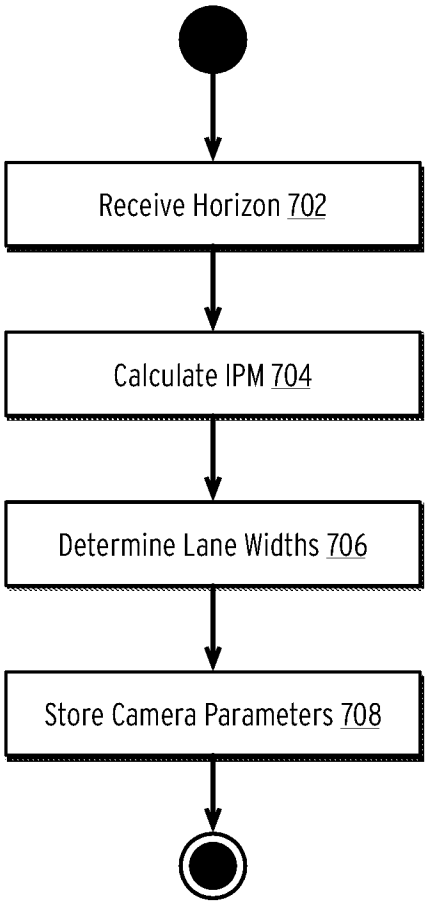
Receive Horizon 702
Calculate IPM 704
Determine Lane Widths 706
Store Camera Parameters 708

FIG. 7

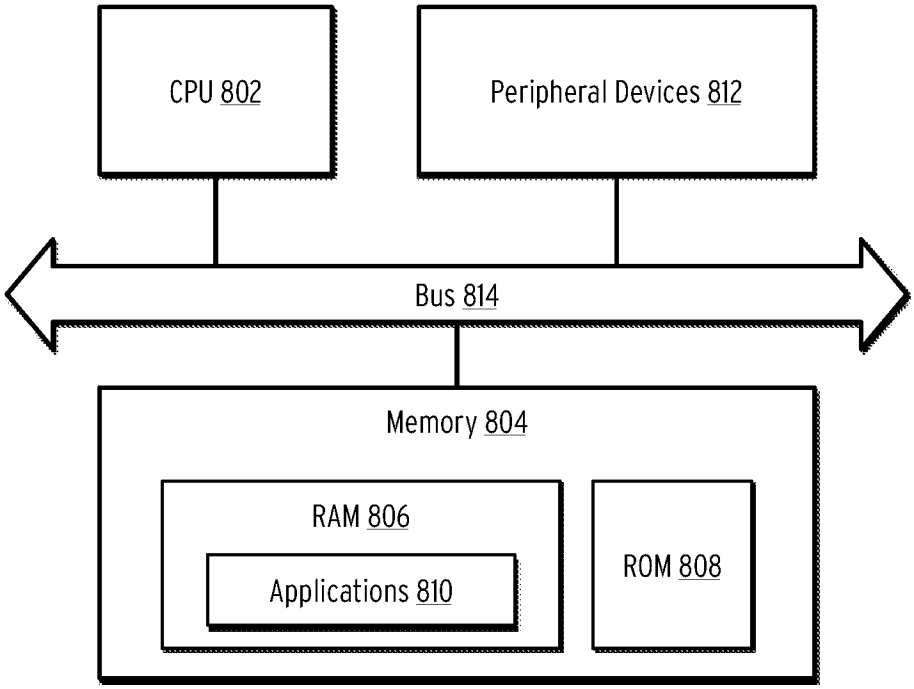
CPU 802
Peripheral Devices 812
Bus 814
Memory 804
RAM 806
Applications 810
ROM 808

FIG. 8

ABSTRACT

Disclosed are methods, devices, and computer-readable media for detecting lanes and objects in image frames of a monocular camera. In one embodiment, a method is disclosed comprising receiving a plurality of images; identifying a horizon in the plurality of images by inputting the plurality of images into a deep learning (DL) model (either stored on a local device or via a network call); determining one or more camera parameters based on the horizon; and storing or using the camera parameters to initialize a camera.

PTO/AIA/96 (08-12)
Approved for use through 11/30/2020. OMB 0651-0031
U.S. Patent and Trademark Office: U.S. DEPARTMENT OF COMMERCE
Under the Paperwork Reduction Act of 1995, no persons are required to respond to a collection of information unless it displays a valid OMB control number.

STATEMENT UNDER 37 CFR 3.73(c)

Applicant/Patent Owner: Motive Technologies, Inc.

Application No./Patent No.: Not Yet Assigned Filed/Issue Date: Concurrently Herewith

Titled: CAMERA INITIALIZATION FOR LANE DETECTION AND DISTANCE ESTIMATION USING SINGLE-VIEW GEOMETRY

Motive Technologies, Inc., a corporation

(Name of Assignee) (Type of Assignee, e.g., corporation, partnership, university, government agency, etc.)

states that, for the patent application/patent identified above, it is (choose **one** of options 1, 2, 3 or 4 below):

1. ☑ The assignee of the entire right, title, and interest.

2. ☐ An assignee of less than the entire right, title, and interest (check applicable box):

   ☐ The extent (by percentage) of its ownership interest is _____%. Additional Statement(s) by the owners holding the balance of the interest must be submitted to account for 100% of the ownership interest.

   ☐ There are unspecified percentages of ownership. The other parties, including inventors, who together own the entire right, title and interest are:

   Additional Statement(s) by the owner(s) holding the balance of the interest must be submitted to account for the entire right, title, and interest.

3. ☐ The assignee of an undivided interest in the entirety (a complete assignment from one of the joint inventors was made). The other parties, including inventors, who together own the entire right, title, and interest are:

   Additional Statement(s) by the owner(s) holding the balance of the interest must be submitted to account for the entire right, title, and interest.

4. ☐ The recipient, via a court proceeding or the like (*e.g.*, bankruptcy, probate), of an undivided interest in the entirety (a complete transfer of ownership interest was made). The certified document(s) showing the transfer is attached.

The interest identified in option 1, 2 or 3 above (not option 4) is evidenced by either (choose **one** of options A or B below):

A. ☐ An assignment from the inventor(s) of the patent application/patent identified above. The assignment was recorded in the United States Patent and Trademark Office at Reel _____, Frame _____, or for which a copy thereof is attached.

B. ☑ A chain of title from the inventor(s), of the patent application/patent identified above, to the current assignee as follows:

1. From: Inventors To: Keep Truckin, Inc.

   The document was recorded in the United States Patent and Trademark Office at
   Reel 057689, Frame 0517, or for which a copy thereof is attached.

2. From: Keep Truckin, Inc. To: Motive Technologies, Inc.

   The document was recorded in the United States Patent and Trademark Office at
   Reel 059965, Frame 0872, or for which a copy thereof is attached.

This collection of information is required by 37 CFR 3.73(b). The information is required to obtain or retain a benefit by the public which is to file (and by the USPTO to process) an application. Confidentiality is governed by 35 U.S.C. 122 and 37 CFR 1.11 and 1.14. This collection is estimated to take 12 minutes to complete, including gathering, preparing, and submitting the completed application form to the USPTO. Time will vary depending upon the individual case. Any comments on the amount of time you require to complete this form and/or suggestions for reducing this burden, should be sent to the Chief Information Officer, U.S. Patent and Trademark Office, U.S. Department of Commerce, P.O. Box 1450, Alexandria, VA 22313-1450. DO NOT SEND FEES OR COMPLETED FORMS TO THIS ADDRESS. **SEND TO: Commissioner for Patents, P.O. Box 1450, Alexandria, VA 22313-1450.**

If you need assistance in completing the form, call 1-800-PTO-9199 and select option 2.

PTO/AIA/96 (08-12)
Approved for use through 11/30/2020. OMB 0651-0031
U.S. Patent and Trademark Office; U.S. DEPARTMENT OF COMMERCE
Under the Paperwork Reduction Act of 1995, no persons are required to respond to a collection of information unless it displays a valid OMB control number.

STATEMENT UNDER 37 CFR 3.73(c)

3. From: _____ To: _____

The document was recorded in the United States Patent and Trademark Office at

Reel _____, Frame _____, or for which a copy thereof is attached.

4. From: _____ To: _____

The document was recorded in the United States Patent and Trademark Office at

Reel _____, Frame _____, or for which a copy thereof is attached.

5. From: _____ To: _____

The document was recorded in the United States Patent and Trademark Office at

Reel _____, Frame _____, or for which a copy thereof is attached.

6. From: _____ To: _____

The document was recorded in the United States Patent and Trademark Office at

Reel _____, Frame _____, or for which a copy thereof is attached.

☐ Additional documents in the chain of title are listed on a supplemental sheet(s).

☐ As required by 37 CFR 3.73(c)(1)(i), the documentary evidence of the chain of title from the original owner to the assignee was, or concurrently is being, submitted for recordation pursuant to 37 CFR 3.11.

[NOTE: A separate copy (i.e., a true copy of the original assignment document(s)) must be submitted to Assignment Division in accordance with 37 CFR Part 3, to record the assignment in the records of the USPTO. See MPEP 302.08]

The undersigned (whose title is supplied below) is authorized to act on behalf of the assignee.

/George Zalepa/	December 1, 2023
Signature	Date
George Zalepa	72706
Printed or Typed Name	Title or Registration Number

PTO/AIA/80 (07-17)
Approved for use through 03/31/2021. OMB 0651-0035
U.S. Patent and Trademark Office; U.S. DEPARTMENT OF COMMERCE
Under the Paperwork Reduction Act of 1995, no person is required to respond to a collection of information unless it displays a valid OMB control number

POWER OF ATTORNEY TO PROSECUTE APPLICATIONS BEFORE THE USPTO

I hereby revoke all previous powers of attorney given in the application identified in the attached statement under 37 CFR 3.73(c).

I hereby appoint:

[X] Practitioners associated with Customer Number: 32361

OR

[ ] Practitioner(s) named below (if more than ten patent practitioners are to be named, then a customer number must be used):

Name	Registration Number	Name	Registration Number

As attorney(s) or agent(s) to represent the undersigned before the United States Patent and Trademark Office (USPTO) in connection with any and all patent applications assigned only to the undersigned according to the USPTO assignment records or assignment documents attached to this form in accordance with 37 CFR 3.73(c).

Please change the correspondence address for the application identified in the attached statement under 37 CFR 3.73(c) to:

[X] The address associated with Customer Number: 32361

OR

[ ]

Firm or individual name		
Address		
City	State	Zip
Country		
Telephone	Email	

Assignee name and address: MOTIVE TECHNOLOGIES, INC.
55 Hawthorne Street, 4th Floor, San Francisco, CA 94105

A copy of this form, together with a statement under 37 CFR 3.73(c) (Form PTO/AIA/96 or equivalent) is required to be filed in each application in which this form is used. The statement under 37 CFR 3.73(c) may be completed by one of the practitioners appointed in this form, and must identify the application in which this Power of Attorney is to be filed.

SIGNATURE of Assignee of Record

The individual whose signature and title is supplied below is authorized to act on behalf of the assignee.

Signature [redacted] Shu White (May 19, 2022 10:37 PDT)	Date **May 19, 2022**
Name Shu White	Telephone 855-232-8506
Title General Counsel	

This collection of information is required by 37 CFR 1.31, 1.32, and 1.33. The information is required to obtain or retain a benefit by the public, which is to update (and by the USPTO to process) the file of a patent or reexamination proceeding. Confidentiality is governed by 35 U.S.C. 122 and 37 CFR 1.11 and 1.14. This collection is estimated to take 18 minutes to complete, including gathering, preparing, and submitting the completed application form to the USPTO. Time will vary depending upon the individual case. Any comments on the amount of time you require to complete this form and/or suggestions for reducing this burden, should be sent to the Chief Information Officer, U.S. Patent and Trademark Office, U.S. Department of Commerce, P.O. Box 1450, Alexandria, VA 22313-1450. DO NOT SEND FEES OR COMPLETED FORMS TO THIS ADDRESS. **SEND TO: Commissioner for Patents, P.O. Box 1450, Alexandria, VA 22313-1450.**

If you need assistance in completing the form, call 1-800-PTO-9199 and select option 2.

CAMERA CALIBRATION FOR LANE DETECTION AND DISTANCE ESTIMATION USING SINGLE-VIEW GEOMETRY AND DEEP LEARNING

CROSS-REFERENCE TO RELATED APPLICATION

[0001] This application is a continuation of, and claims the benefit of, U.S. Appl. No. 17/493,011, filed Oct. 4, 2021 and incorporated by reference in its entirety.

BACKGROUND

[0002] The disclosed embodiments relate to automotive systems and to machine learning systems for analyzing sensor data in such systems.

[0003] Multiple cameras or sensors may be installed in a vehicle to detect objects. However, the use of multiple cameras may be expensive. Sensors such as Radar and Lidar may also be used as proximity sensors, but such sensors may also be costly. In addition, a built-in monocular camera may be used to detect the relative distance to proximate objects; however, this may require the location of the camera to be predefined or preset.

BRIEF SUMMARY

[0004] The present disclosure relates to using a monocular camera (e.g., an image sensor) that may be retrofitted and adjustable within the vehicle such as, the vehicle's dashboard. Upon driving, the camera initializes itself to determine its height with respect to the ground as well as a road plane normal. Thus, the camera may be installed in various positions and later re-initialized or recalibrated as needed.

[0005] The example embodiments are directed towards initializing such a camera onboard a vehicle. In the various embodiments, parameters can include the height of the camera, the viewing angle of the camera relative to the roadway, and a ground or road plane normal vector. Various embodiments are illustrated for performing this initialization which can then be used by downstream processes such as distance estimation or lane boundary detection.

[0006] In a first embodiment, a network-based initialization system is disclosed. In this embodiment, a server-side system receives a video comprising a set of image frames and identifies

one or more lines in the video using a predictive model (e.g., a convolutional neural network). In one embodiment, the lines can include a horizon line. After identifying the horizon line, the system computes some camera parameters (e.g., height, viewing angle, road plane normal, etc.) based on the horizon line. The system then overlays the computed horizon line on the video and transmits it to an annotator device for manual review. In response, the annotator device can transmit a confirmation indicating the horizon line was accurate. In some embodiments, the annotator device can reject the horizon line and manually add the horizon line. Once the horizon line is confirmed, the system returns the camera parameters to the calling party (e.g., a camera onboard a vehicle).

[0007] In a second embodiment, an on-vehicle neural network is disclosed. In this embodiment, a camera records a video comprising one or more image frames. A backbone network generates a set of intermediate features representing the video. The intermediate features are then input into a lane or horizon prediction head (e.g., a neural network). The lane or horizon prediction head can then predict a horizon line using the lane or horizon prediction head, the horizon line comprising a set of horizon markers. Finally, the on-vehicle device can compute a camera parameter (e.g., height, viewing angle, road plane normal, etc.) based on the horizon line and lane key points.

[0008] In a third embodiment, an on-vehicle neural network is disclosed. In this embodiment, a camera records a video comprising one or more image frames. A backbone network generates a set of intermediate features representing the video. The intermediate features are then input into a camera parameter estimation head (e.g., a neural network). The on-vehicle device can then predict camera parameters using the output of the camera parameter estimation head, the camera parameter estimation head trained using an output of the backbone network, and an output of a lane and horizon line prediction head.

[0009] Various further embodiments are disclosed in the following description.

BRIEF DESCRIPTION OF THE DRAWINGS

[0010] FIG. 1 is a block diagram of a vehicle according to some embodiments of the disclosure.

[0011] FIG. 2 is an interaction diagram illustrating a method for initializing a camera according to some embodiments.

[0012] FIG. 3A is a block diagram illustrating a neural network for predicting lane and horizon lines according to some embodiments.

[0013] FIG. 3B is a block diagram illustrating a neural network for predicting lane and horizon lines and camera parameters according to some embodiments.

[0014] FIG. 3C is an illustration of the output of the neural networks of FIGS. 3A and 3B, according to some embodiments.

[0015] FIG. 4A is a flow diagram illustrating a method for training the neural network of FIG. 3A according to some embodiments.

[0016] FIG. 4B is a flow diagram illustrating a method for training the neural network of FIG. 3B according to some embodiments.

[0017] FIG. 5A is a flow diagram illustrating a method for predicting lane and horizon lines using the neural network of FIG. 3A according to some embodiments.

[0018] FIG. 5B is a flow diagram illustrating a method for predicting lane and horizon lines and camera parameters using the neural network of FIG. 3B according to some embodiments.

[0019] FIG. 6 is a flow diagram illustrating a method for detecting lane markers on a roadway and determining distances to objects according to some embodiments.

[0020] FIG. 7 is a flow diagram illustrating a method for initializing a camera installed in a vehicle according to some embodiments.

[0021] FIG. 8 is a block diagram illustrating a computing device showing an example embodiment of a computing device used in the various embodiments.

DETAILED DESCRIPTION

[0022] FIG. 1 is a block diagram of a vehicle according to some embodiments of the disclosure.

[0023] The system illustrated in FIG. 1 may be installed entirely within a vehicle. In some embodiments, some components may comprise existing autonomous vehicle subsystems, although, in some embodiments, autonomous vehicle subsystems are optional. Thus, the vehicle in FIG. 1 may comprise either an autonomous, semi-autonomous, or non-autonomous vehicle. Descriptions made herein are primarily described with respect to autonomous vehicles; however, this is not intended to be limiting.

[0024] In the illustrated embodiment, the system includes an autonomous vehicle subsystem 102 or Advanced Driver Assistance System (ADAS). In an embodiment, autonomous vehicle subsystem 102 includes map database 102A, radar devices 102B, Lidar devices 102C, digital cameras 102D, sonar devices 102E, global positioning system (GPS) receivers 102F, and inertial measurement unit (IMU) devices 102G. Each of the components of autonomous vehicle subsystem 102 comprises standard components provided in most current autonomous vehicles or ADAS. In an embodiment, map database 102A stores a plurality of high-definition three-dimensional maps used for routing and navigation. Radar devices 102B, Lidar devices 102C, digital cameras 102D, sonar devices 102E, GPS receivers 102F, and IMU devices 102G may comprise various respective devices installed at various positions throughout the autonomous vehicle as known in the art. For example, these devices may be installed along the perimeter of an autonomous vehicle to provide location awareness, collision avoidance, and another standard autonomous vehicle or ADAS functionality. As discussed, in some embodiments, the autonomous vehicle subsystem 102 may be optional or limited such as any form of an ADAS. For example, a non-autonomous vehicle may only include one camera device, such as a dash-mounted camera device. In this embodiment, the camera may be included in the sensors 106D.

[0025] Vehicular subsystem 106 is additionally included within the system. Vehicular subsystem 106 includes various anti-lock braking system (ABS) devices 106A, engine control unit (ECU) devices 106B, transmission control unit (TCU) devices 106C, and various other sensors 106D such as heat/humidity sensors, emissions sensors, etc. These components may be utilized to

control the operation of the vehicle. In some embodiments, these components perform operations in response to the streaming data generated by autonomous vehicle subsystem 102. The standard autonomous vehicle interactions between autonomous vehicle subsystem 102 and vehicular subsystem 106 are generally known in the art and are not described in detail herein.

[0026] The processing side of the system includes one or more processors 110, short-term memory 112, a radio frequency (RF) system 114, graphics processing units (GPUs) 116, long-term storage 118, and one or more interfaces 120.

[0027] One or more processors 110 may comprise central processing units, field-programmable gate array (FPGA) devices, or any range of processing devices needed to support the operations of the autonomous vehicle. Memory 112 comprises dynamic random-access memory (DRAM) or other suitable volatile memory for the temporary storage of data required by processors 110. RF system 114 may comprise a cellular transceiver and/or satellite transceiver. Long-term storage 118 may comprise one or more high-capacity solid-state drives (SSDs). In general, long-term storage 118 may be utilized to store, for example, high-definition maps, routing data, and any other data requiring permanent or semi-permanent storage. GPUs 116 may comprise one or more high throughput GPU, vector processing unit (VPU), and/or tensor processing unit (TPU) devices for processing data received from autonomous vehicle subsystem 102. Finally, interfaces 120 may comprise various display units positioned within the autonomous vehicle (e.g., an in-dash screen).

[0028] Each of the devices is connected via a bus 108. In an embodiment, bus 108 may comprise a controller area network (CAN) bus. In some embodiments, other bus types may be used (e.g., a FlexRay or Media Oriented Systems Transport, MOST, bus). Additionally, each subsystem may include one or more additional busses to handle internal subsystem communications (e.g., Local Interconnect Network, LIN, busses for lower bandwidth communications).

[0029] The system additionally includes a lane and distance subsystem 104, which performs the operations required by the methods illustrated in the following figures. The lane and distance subsystem 104 includes a distance estimation subunit 104A that can determine the distance between the system and other objects. The lane and distance subsystem 104 additionally includes

a lane detection subunit 104B that can detect lanes (including unmarked lanes) on a roadway the vehicle is operating on. The lane and distance subsystem 104 additionally includes a vehicle detection subunit 104C that can detect vehicles within image frames of a roadway the vehicle is operating on, as described in more detail herein..

[0030] In some embodiments, the lane and distance subsystem 104 may be an after-market device installed in a non-autonomous vehicle system. In other embodiments, the lane and distance subsystem 104 can be integrated into an autonomous vehicle's or ADAS processing units. Details of distance estimation subunit 104A, lane detection subunit 104B, and vehicle detection subunit 104C (and their operations) are further described herein. The lane and distance subsystem 104 additionally includes a camera initialization subunit 104D. In an embodiment, camera initialization subunit 104D can initialize a camera upon startup or upon detecting a movement or repositioning of the camera. In some embodiments, the camera initialization subunit 104D can communicate with a remote system (illustrated in FIG. 2) to initialize a camera with one or more camera parameters (e.g., camera height, camera viewing angle, and road plane normal). In other embodiments, the camera initialization subunit 104D can store one or more predictive models (e.g., as depicted in FIGS. 3A and 3B) to generate camera parameters locally. In some embodiments, a combination of approaches can be employed. For example, the camera initialization subunit 104D can locally predict camera parameters and then confirm these parameters with a remote system. Alternatively, in an embodiment, the camera initialization subunit 104D can predict a horizon line and transmit the horizon line along with lane key points to a remote system to determine camera parameters.

[0031] As will be discussed in more detail, some embodiments of the disclosure are related to lane detection in the above vehicular system. The disclosed embodiments generalize lane boundary (line or curve) detection on a rather small dataset as compared to lane region analysis which requires larger data sets. The disclosed embodiments utilize a convolutional neural network (CNN) to predict lane boundary and horizon markers directly instead of sampling them from segmentation maps. The CNN output is then passed through a post-processing pipeline to fit lines to the predicted markers generated by the CNN and to initialize lane width. At inference, if the disclosed embodiments fit two lane boundaries (e.g., lines or curves) to the detected markers jointly using the initialized lane width within a reasonable tolerance (e.g., 30%) and parallelism, the disclosed

embodiments may then predict any missing lane boundaries and handle multiple predictions through weighted averaging. The disclosed embodiments greatly improve the lane detection accuracy when compared to existing systems.

[0032] FIG. 2 is a swim lane diagram illustrating a method for initializing a camera according to some embodiments.

[0033] In process 202, a device 230 (e.g., a camera and processor installed in a vehicle) captures a video, represented as, for example, a set of one or more images. In an embodiment, process 202 can include capturing a sequence of frames. In an embodiment, the device 230 can trigger process 202 when a vehicle equipped with the device 230 is in a preferred location, such as traveling on a highway. In such an embodiment, process 202 can comprise determining the location of a vehicle and confirming that the location is near a highway or other predefined location type. In an embodiment, the device 230 can implement process 202 as a state machine executing on the device 230 that continuously monitors for a special event. Examples of special events include driving over a preset speed (e.g., 35 miles per hour) for a preset duration (e.g., sixty seconds). Once this special event is detected, process 202 can then begin capturing images for a preset duration (e.g., thirty or sixty seconds). In an embodiment, process 202 can additionally confirm a road type (e.g., determining if the vehicle is on a highway or two-lane road) before recording images.

[0034] Once process 202 records a video of the preset duration, it transmits a camera initialization event to a camera initialization service 232 in transmission 204. In the illustrated embodiment, the camera initialization service 232 can comprise a remote computing device executing the camera initialization service 232. For example, the camera initialization service 232 can comprise an application running on a remote server.

[0035] In process 206, the camera initialization service 232 receives the video transmitted in transmission 204. In an embodiment, the camera initialization service 232 can comprise a remote endpoint configured to receive network requests and process the request body (i.e., the video). In an embodiment, the camera initialization service 232 detects lane and horizon lines in the video using a predictive model, such as a deep learning or other AI model. In an embodiment, process 206 can comprise inputting the video into a predictive model, such as a CNN or other type of deep

learning model to identify lane and horizon markers in a given video file automatically. Details of this type of predictive model are provided in the description of FIG. 6 and are not repeated herein. Additionally, examples of such models are provided in FIGS. 3A and 3B. In general, the model can output a set of lane and horizon lines identified by key points or markers.

[0036] In one embodiment, if process 206 can detect at least two lanes (e.g., identified by three independent lane lines), process 206 can further include computing camera parameters for the device 230 that recorded the video. Further detail on computing camera properties based on detected lane lines is provided in commonly-owned Appl. No. 17/173,950, filed Feb. 11, 2021, and incorporated by reference in its entirety. As one example, process 206 can predict the camera height, viewing angle, and road plane normal.

[0037] In an embodiment, process 206 overlays the computed lane and horizon lines on the original video file, generating an overlaid video file. An example of such an overlaid video file is provided in FIG. 3C. In some embodiments, the overlaying of lane lines can be optional. In another embodiment, process 206 can only overlay a horizon on the original video file as part of generating an overlaid video file. Process 206 can then transmit this overlaid video file to an annotator device 234 in transmission 208.

[0038] In an embodiment, if the camera initialization service 232 fails to estimate lane or horizon lines and thus does not compute camera parameters, the camera initialization service 232 can bypass generating an overlaid video file. In such a scenario, the camera initialization service 232 can transmit the original video file in transmission 208 to enable the annotator device 234 so that the annotator device 234 can add lane markings manually, as will be discussed.

[0039] In an embodiment, the annotator device 234 can comprise a workstation or web-based application allowing for human review of automatically detected horizon and lane lines. When the annotator device 234 receives an overlaid video file, process 210 presents the overlaid video file to the human annotator. The process 210 then requests that the human annotator confirm the lane lines (if present) and horizon in the overlaid video file. If the annotator confirms the overlaid lines, the annotator can accept the lines and transmit its acceptance back to the camera initialization service 232 in transmission 222. In response, the camera initialization service 232 can then transmit the generated camera parameters back to the device 230 in transmission 224. As described

in, for example, FIG. 6, the device 230 can then use these parameters to perform lane detection and distance estimation, respectively, while a camera is in motion.

[0040] As discussed, if the annotator device 234 receives the original video file and not an overlaid video file, the annotator device 234 may manually mark lane markers and thus lane lines using an annotation interface allowing for graphical entry of lane markers and (optionally) horizons on the images in the original video file. For example, the annotator interface may allow for manual drawing of lines (e.g., via straight lines or Bezier curves) overlaid on an image in a video file. These manual entries can then be converted into lane lines of the same format output by the deep learning model of the camera initialization service 232. In an embodiment, if the annotator device 234 received an overlaid video file but determines that the overlaid lane lines or horizon is not accurate, the human annotator can manually annotate the lane lines and bypass the transmission 222. Thus, if the annotator device 234 receives an original video or receives an incorrectly labeled overlaid video file, the human annotator will manually add a horizon line and/or lane lines in process 210.

[0041] In the illustrated embodiment, if process 210 transmits an acceptance in transmission 222, the method ends after transmission 224. However, if process 210 determines that no lane lines were added by process 206 or that the added lane lines were inaccurate, the human annotator manually adds such lines, generating a second, manually overlaid video file, and transmits the manually overlaid video file to the initialization service 236 in transmission 212.

[0042] In the illustrated embodiment, the initialization service 236 executes a process 214 in response to a video file and lane line markers. In an embodiment, process 214 can comprise a deep learning or AI model that predicts camera parameters (e.g., height, IPM, etc.) based on such input data. Certainly, in some embodiments, camera initialization service 232 may employ dual models: one predicting lane lines and one predicting camera parameters based on lane lines. In such an embodiment, the initialization service 236 can reuse the model for predicting camera parameters. In some embodiments, these two models may comprise heads of a multi-headed model sharing a common backbone neural network. Details of such models are provided in FIGS. 3A and 3B.

[0043] After processing, process 214 returns a computed horizon line and camera parameters to the annotator device 234 in transmission 216. In one embodiment, the data in transmission 216

can comprise an overlaid video similar or identical to that transmitted in transmission 208. In response, the annotator device 234 performs process 218, which can be similar or identical to that of process 210. Specifically, the manually overlaid video file is reviewed by human reviewers to confirm the horizon line and/or camera parameters. If the annotator rejects the predicted horizon line and/or camera parameters, the annotator device 234 can request a new video capture by the device 230 by requesting one in transmission 220. Alternatively, if the annotator confirms that the horizon and/or camera parameters are accurate, the annotator device 234 can transmit the camera parameters to the camera initialization service 232 in transmission 226. The camera initialization service 232 can receive the camera parameters and, in some embodiments, can store the camera parameters as training data to improve the deep learning model. Further, the camera initialization service 232 can return the accepted camera parameters to the device 230 in transmission 228.

[0044] FIG. 3A is a block diagram illustrating a neural network for predicting lane and horizon lines according to some embodiments.

[0045] Systems can use the illustrated neural network in some embodiments instead of a geometric process to determine lane and horizon lines. Specifically, given an input image 302 (e.g., a video frame), a backbone network 304 can convolve the input image 302 to generate a set of intermediate features (not illustrated). The backbone network 304 feeds these intermediate features into a lane-horizon marking head 306, which outputs a plurality of key points 308 representing both the lane lines in the input image 302 as well as a horizon line in the input image 302.

[0046] In an embodiment, the lane-horizon marking head 306 can comprise a CNN configured to process images and output a sequence of points representing the horizon and/or lane lines. For example, in some embodiments, lane-horizon marking head 306 can be a fully convolutional network (FCN) that includes a plurality of convolutional blocks where each block can include one or more convolution, batch normalization, activation and up-sampling layers. In some embodiments, FCN can also be a network comprising, or based on, Unet, DeepLab, PSPNet, SCNN or EnetSAD architectures. In some embodiments, FCN can include a neck module that further processes backbone features to detect markers on fine-grain scale. The neck module can have one or more feature pyramid network (FPN), spatial pyramid pooling (SPP), recurrent neural network (RNN) or long short-term memory (LSTM) layers to take advantage of contextual

information. In an embodiment, the lane-horizon marking head 306 can be a transformer network. In some embodiment, the lane-horizon marking head 306 can further include a plurality of fully connected layers (e.g., dense layers) with optional dropout layers that output predicted lane or horizon markers.

[0047] In some embodiments, the lane-horizon marking head 306 can comprise a combined deep learning network that predicts both horizon and lane lines. In another embodiment, lane-horizon marking head 306 can comprise two separate prediction heads (e.g., deep learning models). In such an embodiment, the losses of the two separate prediction heads can be combined as a joint loss function when backpropagating.

[0048] FIG. 3C illustrates the predicted lane/horizon lines overlaid on top of an input image. As illustrated, the neural network predicts both horizon line 314 and multiple lane lines (e.g., lane line 316, lane line 318, and lane line 320).

[0049] In some embodiments, the backbone network 304 can comprise an EfficientNet backbone network. For example, in some embodiments, the backbone network 304 can comprise an EfficientNet or EfficientNet-lite backbone. In an embodiment, the backbone network 304 can further comprise a plurality of convolutional layers followed by one or more LSTM layers. In some embodiments, a max-pooling layer can be inserted between the convolutional layers and the LSTM layers. In some embodiments, a fully connected layer can be placed after the LSTM layers to process the outputs of the LSTM layers. Alternatively, or in conjunction with the foregoing, the intermediate network can comprise an RNN. In other embodiments, the intermediate network can be implemented using Gated Recurrent Unit (GRU), bidirectional GRU, or transformer layers (versus LSTM or RNN layers).

[0050] In an embodiment, the neural network is trained to predict lane and horizon key points 308. During testing, image frames are fitted with lane lines and horizon lanes based on estimated key points. As described, in some embodiments, human annotators can be used to perform this fitting, as described in the description of FIG. 2. In other embodiments, a geometric process can be performed to identify lane and horizon lines. As discussed in previous figures, once the horizon line is determined, downstream processes can use the horizon line to determine the height of a

camera and its viewing angle (i.e., road plane normal) with respect to the ground. Further, from these, downstream processes can determine the road-plane normal vector.

[0051] In some embodiments, by using a neural network, a camera device equipped with the neural network can more rapidly estimate a horizon line using a lightweight model locally installed on the camera device. As such, if the camera device is moved (either intentionally or unintentionally), the camera can automatically re-estimate the horizon lines and re-compute the camera parameters. In some embodiments, Kalman filtering can be employed to temporally smooth image and/or horizon/lane key points over time.

[0052] In some embodiments, the neural network can be employed in combination with the process depicted in FIG. 2. Specifically, the processing in FIG. 2 utilizes a remote computing system to annotate horizon and lane lines, and in some cases, manually adding lane markers. In some embodiments, a vehicular system can use the system of FIG. 3A and "fallback" to the procedure described in FIG. 2 in the event that the key points 308 cannot be accurately predicted using the system of FIG. 3A. In some embodiments, the model of FIG. 3A can provide advantages over the offline process of FIG. 2. For example, the use of the neural network can relax constraints that the vehicle needs to be driving on a highway having three or more lane lines. Indeed, just two lane-lines with a known lane-width would be sufficient for camera initialization. That is, since the model is capable of predicting the horizon line directly, previous requirements of having three lane lines in frame (e.g., to geometrically calculate a horizon line) can be relaxed. Additionally, the neural network can be configured to run directly on in-vehicle devices and does not require a cloud-based service initiation or annotator review. Further, since the camera itself can detect (or be informed of) movements, recalibration can be done on an as-needed basis.

[0053] FIG. 3B is a block diagram illustrating a neural network for predicting lane and horizon lines and camera parameters according to some embodiments.

[0054] In the illustrated embodiment, various elements have previously been discussed, such as input image 302, backbone network 304, lane-horizon marking head 306, and key points 308. The discussion of these components is not repeated herein but is incorporated by reference in its entirety.

[0055] In the illustrated embodiment, in addition to the component of the model of FIG. 3A, a separate camera parameter prediction head 310 that outputs camera parameters 312 is coupled to backbone network 304. Thus, the backbone network 304 feeds intermediate representations of input image 302 into the separate camera parameter prediction head 310, and the separate camera parameter prediction head 310 outputs corresponding camera parameters 312. In an embodiment, the camera parameters 312 can comprise a camera height and viewing angle with respect to the ground plane and the road-plane normal vector. In some embodiments, when the neural network of FIG. 3B is used, the lane-horizon marking head 306 can be modified to only predict lane lines and not a horizon line.

[0056] As with lane-horizon marking head 306, in some embodiments, the camera parameter prediction head 310 can include a plurality of convolutional blocks used to compute relationships among different objects in the scene. Each convolutional block can include, in some embodiments, one or more convolutional, batch normalization, activation or up-sampling layers. In an embodiment, the camera parameter prediction head 310 can further include a plurality of fully connected layers (e.g., dense layers) with optional dropouts to predict camera parameters. The specific arrangement of layers in the camera parameter prediction head 310 is not limiting, and other configurations may be used.

[0057] In the illustrated embodiment, the separate camera parameter prediction head 310 can predict camera parameters 312 without relying on the key points 308. Specifically, while the two heads are trained simultaneously (using a joint loss function), the individual heads can be separated and used independently. Thus, backpropagation based on the joint loss can utilize relevant features of backbone network 304 and lane-horizon marking head 306 to optimize the layers of the separate camera parameter prediction head 310. Then, in production, the input image 302 can be fed through the backbone network 304 and separate camera parameter prediction head 310 to predict camera parameters such as camera height and viewing angle.

[0058] In an embodiment, the output of the lane-horizon marking head 306 can further be used as an input to separate camera parameter prediction head 310. In such an embodiment, the key points 308 can be used as an additional feature (along with image representations) to predict the camera parameters. In some embodiments, this additional input may be optional.

[0059] In some embodiments, a joint loss is minimized, which comprises the aggregate of the loss of the lane-horizon marking head 306 ($loss_{lane-horizon}$) that evaluates the distance between the estimated and ground-truth lane/horizon key points and the loss of the separate camera parameter prediction head 310 ($loss_{cam-init}$) that comprises the loss between the estimated and ground-truth camera parameters. Thus, the joint loss minimized is equal to $loss_{joint} = loss_{lane-horizon} + loss_{cam-init}$.

[0060] In some embodiments, the neural network of FIG. 3B can provide additional advantages over current systems. For example, the neural network can directly estimate camera parameters and partially or completely eliminate the need for accurate lane and horizon detection. In addition, the illustrated neural network does not require the lane width of the road the vehicle is running on. In some embodiments, the estimation of an auxiliary horizon can also be used in formulating a fusion strategy among different methods of camera initialization (manual, geometry-based and model-based).

[0061] FIG. 4A is a flow diagram illustrating a method for training the neural network of FIG. 3A according to some embodiments.

[0062] In step 402A, the method receives an image or set of images. In one embodiment, the image in the method comprises an image captured by a camera device installed within a vehicle. Such images were discussed previously in connection with FIG. 3A, the disclosure of which is incorporated in its entirety. In some embodiments, a set of images can be received as a batch of images. In some embodiments, the image or set of images can comprise a video or video frames.

[0063] In step 404A, the method processes the image(s) using a backbone network. In an embodiment, the backbone network can comprise a backbone network such as backbone network 304, the disclosure of which is incorporated in its entirety. In some embodiments, the backbone network can include an intermediate network as discussed in the description of FIG. 3A.

[0064] In step 406A, the method inputs the features of the backbone network (and, if implemented, an intermediate network) into a lane/horizon marking head. As described in FIG. 3A, the lane/horizon marking head can comprise a neural network configured to predict lane and/or horizon markers for a given image or set of images. In some embodiments, the lane/horizon

marking head can include an RNN or LSTM layer (or layers) to refine predictions based on a sequence of images.

[0065] In step 408A, the method takes input, from step 414A, the ground truth image labels corresponding to the processed image along with all the classification prediction head's output to compute a prediction loss. Details of prediction loss and backpropagation are described in the previous FIG. 3A and are not repeated herein but are incorporated in their entirety herein. In general, the ground truth can comprise a set of expected markers or lines (e.g., horizon and/or lane markers or lines). In step 408A, the method computes the loss for each of the lane and/or horizon markers as compared to the predicted lane and/or horizon markers to determine a prediction loss.

[0066] In step 410A, the method determines if a stopping criterion is met. If so, the method ends. In one embodiment, the stopping criterion can comprise a configurable parameter set during the training of the machine learning (ML) model. In one embodiment, the stopping criterion can comprise a monitored performance metric such as the output of the loss function. Other types of stopping criteria can be utilized alone or in combination with the foregoing. For example, one stopping criterion may comprise the lack of a change in the loss function output across a configured number of epochs, a decrease in performance of the ML model, or a cap on the maximum number of allowed epochs or iterations.

[0067] In step 412A, if the method determines that the stopping criterion is not met, the method will compute partial derivatives against all trainable network parameters and back-propagates them to adjust each layer parameter, as described previously.

[0068] In brief, in steps 402A–412A, the method can repeatedly adjust the parameters in the network so as to minimize a measure of the difference (e.g., cost function) between the predicted output of the ML model and the ground truth until the stopping criterion is met. In the illustrated embodiment, if the method returns to step 402A after step 412A, the method will utilize the weights updated in step 412A. Alternatively, when the method determines that a stopping criterion is met, the method may end.

[0069] FIG. 4B is a flow diagram illustrating a method for training the neural network of FIG. 3B according to some embodiments.

[0070] In step 402B, the method receives an image. In one embodiment, the image in the method comprises an image captured by a camera device installed within a vehicle. Such images were discussed previously in connection with FIG. 3B, the disclosure of which is incorporated in its entirety. In some embodiments, a set of images can be received as a batch of images. In some embodiments, the image or set of images can comprise a video or video frames.

[0071] In step 404B, the method processes the image using a backbone network. In an embodiment, the backbone network can comprise a backbone network such as backbone network 304, the disclosure of which is incorporated in its entirety.

[0072] In step 406B, the method feeds backbone features into a plurality of prediction heads. In various embodiments, the prediction heads can include multiple prediction heads as depicted in FIG. 3B. Specifically, in an embodiment, the prediction heads include a first prediction head configured to predict lane and/or horizon lines/markers and a second prediction head configured to predict camera parameters (e.g., a height, angle with respect to a roadway, and road plane normal). In some embodiments, the method can optionally process the backbone features using an intermediate head (e.g., an intermediate network such a CNN, RNN, LSTM, GRU, etc.) prior to inputting data into the prediction heads. The specific processing of each of the prediction heads has been described previously in the descriptions of FIG. 3B and is not repeated herein but is incorporated herein in its entirety.

[0073] In step 408B, the method takes as input, from step 414B, the ground truth image labels corresponding to the processed image along with all the prediction heads' outputs to compute a single joint loss aggregating the individual losses of the plurality of prediction heads. Details of joint loss function and backpropagation are described in the previous FIG. 3B and are not repeated herein but are incorporated in their entirety herein. In general, the ground truth can comprise a set of expected markers or lines (e.g., horizon and/or lane markers or lines) as well as expected camera parameters. In step 408B, the method computes the loss for each of the expected features as compared to the predicted features and aggregates these losses to determine a joint loss.

[0074] In step 410B, the method determines if a stopping criterion is met. In one embodiment, the stopping criterion can comprise a configurable parameter set during the training of the ML model. In one embodiment, the stopping criterion can comprise a monitored performance metric

such as the output of the loss function. Other types of stopping criteria can be utilized alone or in combination with the foregoing. For example, one stopping criterion may comprise the lack of a change in the loss function output across a configured number of epochs, a decrease in performance of the ML model, or a cap on the maximum number of allowed epochs or iterations.

[0075] In step 412B, if the method determines that the stopping criterion is not met, the method computes partial derivatives against all trainable network parameters and back-propagates them to adjust each layer parameter, as described previously.

[0076] In brief, in steps 402B–412B, the method can repeatedly adjust the parameters in the network so as to minimize a measure of the difference (e.g., cost function) between the predicted output of the ML model and the ground truth until the stopping criterion is met. Alternatively, when the method determines that a stopping criterion is met, the method may end. In the illustrated embodiment, if the method returns to step 402B after the decision in step 410B, the method will utilize the weights updated in step 412B.

[0077] FIG. 5A is a flow diagram illustrating a method for predicting lane and horizon lines using the neural network of FIG. 3A according to some embodiments. As will be discussed, in some embodiments, FIG. 5A can be used as part of step 608.

[0078] In step 502A, the method receives an image or set of images. In one embodiment, the image in the method comprises an image captured by a camera device installed within a vehicle. Such images were discussed previously in connection with FIG. 3A, the disclosure of which is incorporated in its entirety. In some embodiments, a set of images can be received as a batch of images. In some embodiments, the image or set of images can comprise a video or video frames.

[0079] In step 504A, the method processes the image(s) using a backbone network. In an embodiment, the backbone network can comprise a backbone network such as backbone network 304, the disclosure of which is incorporated in its entirety. In some embodiments, the backbone network can include an intermediate network.

[0080] In step 506A, the method inputs the features of the backbone network (and, if implemented, an intermediate network) into a lane and/or horizon prediction head. In some

embodiments, the lane and/or horizon prediction head can comprise lane-horizon marking head 306, the disclosure of which is incorporated in its entirety.

[0081] In step 508A, the method uses the predicted lane and/or horizon markers or lines to compute camera parameters. Details of this step are provided in more detail in the description of FIG. 7, incorporated herein in its entirety.

[0082] FIG. 5B is a flow diagram illustrating a method for predicting lane and horizon lines and camera parameters the neural network of FIG. 3B according to some embodiments. As will be discussed, in some embodiments, FIG. 5B can be used as part of step 608.

[0083] In step 502B, the method receives an image or set of images. In one embodiment, the image in the method comprises an image captured by a camera device installed within a vehicle. Such images were discussed previously in connection with FIG. 3B, the disclosure of which is incorporated in its entirety. In some embodiments, a set of images can be received as a batch of images. In some embodiments, the image or set of images can comprise a video or video frames.

[0084] In step 504B, the method processes the image(s) using a backbone network. In an embodiment, the backbone network can comprise a backbone network such as backbone network 304, the disclosure of which is incorporated in its entirety. In some embodiments, the backbone network can include an intermediate network.

[0085] In step 506B, the method inputs the features of the backbone network (and, if implemented, an intermediate network) into a camera parameter head. In an embodiment, the camera parameter head can comprise separate camera parameter prediction head 310. In an optional embodiment, the method can further input the features of the backbone network into a lane and/or horizon prediction head. In some embodiments, the lane and/or horizon prediction head can comprise lane-horizon marking head 306, the disclosure of which is incorporated in its entirety.

[0086] In step 508B, the method outputs camera parameters. In some embodiments, the camera parameters can be stored for future use, such as during lane detection or distance estimation as described in FIG. 6. If the method predicts lane or horizon markers/lines, step 508B can further comprise outputting the predicted lane/horizon markers/lines.

[0087] FIG. 6 is a flow diagram illustrating a method for detecting lane markers on a roadway and determining distances to objects according to some embodiments of the disclosure.

[0088] In step 602, the method receives video frames. In an embodiment, the video frames are captured by a camera installed in or on a vehicle. In an embodiment, the camera is mounted at a fixed location and direction with respect to the vehicle. For example, the camera may be a dash-mounted camera. In an embodiment, the camera continuously streams video frames while in operation.

[0089] In step 604, the method detects markers (or key points) in video frames using a CNN. Reference is made to FIG. 7, which depicts one embodiment of a CNN used in step 604, according to some embodiments of the disclosure. In an alternative embodiment, the network of FIGS. 3A or 3B can alternatively be used to predict lane lines. For example, key points 308 can be used to generate horizon line key points using lane-horizon marking head 306. In such an embodiment, the lane-horizon marking head 306 can be utilized both for initialization (as will be discussed) but also during the prediction phase (e.g., to continuously identify a horizon line).

[0090] In step 606, the method determines if the system is initializing a camera. If so, the method proceeds to step 608. If not, the method proceeds to step 610. Next, in step 614, the method fits one or more lines to the markers. In some embodiments, step 614 can be optional. As illustrated, if the camera is already initialized, step 608 is bypassed, and the method proceeds directly toward step 614. In an alternative embodiment, as exemplified in FIG. 2, step 606 can be executed after step 602 and step 608 can include the network-based initialization procedure described in FIG. 2.

[0091] In an embodiment, the method determines that the system is initializing if camera parameters have not been stored for the camera. In an embodiment, the estimation of camera parameters is a one-off calculation for a given camera which is done over a small set of initial frames. Thus, each camera can be associated with a set of camera parameters and these camera parameters need only be calculated once per camera. In some embodiments, the camera parameters may be recalculated as desired or in response to a change in camera position or other intrinsic value. For example, in an embodiment, the method can determine if an orientation measured by one or more leveling devices has changed from an orientation that was present when calculating

the camera parameters. If so, the method can perform step 608 in response to detecting such a change. In one embodiment, the camera parameters can comprise a camera height and road normal vector associated with a given camera. In some embodiments, an inverse perspective mapping can then be computed based on the camera height and road normal vector.

[0092] In step 608, the method initializes the camera using the frames recorded by the camera.

[0093] In an embodiment, camera initialization involves using the horizon output by a CNN (e.g., using the methods described in FIGS. 2, 5A, or 5B) and third-party data sources to calculate a camera height and road normal vector. In some embodiments, after identifying a camera height and road normal vector, the method can further comprise calculating an IPM that can be used to synthetically rotate the viewpoint of the video frames. In some embodiments, the method can then use a lane width determined from the rotated viewpoint to fit equidistant parallel lanes in rectified view after the initialization.

[0094] In an embodiment, the methods discussed in connection with FIG. 6 may utilize horizon detection directly from lane detection network as a fifth line (in addition to four lane lines). In some embodiments, a separate neural network for horizon detection may also be used. Details of this approach are described in connection with FIGS. 3A and 3B. As an alternative, a server-side approach can be used to determine the camera parameters. Details of this approach are described in connection with FIG. 2.

[0095] FIG. 7 is a flow diagram illustrating a method for initializing a camera installed in a vehicle according to some embodiments of the disclosure. As described above, the method may only need be performed once per camera or can be performed on demand (e.g., in response to a change in camera orientation or angle) as part of a recalibration or reinitialization procedure.

[0096] In step 702, the method receives a horizon line detected using a CNN or similar model. As discussed above, in some embodiments, the horizon line can be determined by a local neural network (as in FIGS. 3A and 3B) or via a remote data source (as in FIG. 2).

[0097] In step 704, the method computes the IPM for a camera and rectifies the sample images. In an embodiment, step 704 comprises computing a road plane normal vector ($\hat{n}$) using an intrinsic camera matrix (K) and the detected horizon (l_h) according to:

$$\hat{n} = K^T l_h$$

(Equation 1)

where K^T comprises the transpose of the intrinsic camera matrix. In an embodiment, the intrinsic camera matrix comprises the geometric properties of the camera. After computing the plane normal ($\hat{n}$), the method computes the IPM (H) using:

$$H = KRK^{-1}$$

(Equation 2)

where H is the rectification homography which will rotate the camera view to align its Z-axis with the road plane normal, and R is the rotation matrix defined by:

$$R = [l_h \times \hat{n}; (l_h \times \hat{n}) \times -\hat{n}; -\hat{n}]$$

(Equation 3)

[0098] Further detail on computing an IPM is provided in commonly-owned Appl. No. 17/173,950, filed Feb. 11, 2021, and incorporated by reference in its entirety.

[0099] In some embodiments, the method may further include step 706 wherein lane widths (in pixels) of lanes in the video frames are determined.

[0100] In an embodiment, a current location is determined in step 706. As used herein, a current location can refer to a latitude and longitude, Geohash value, or other identifying value. In an embodiment, this current location is used to retrieve lane width details from a third-party mapping service. In an embodiment, the method can transmit the current location to the third-party mapping service and receive a lane width associated with the current location or, more specifically, the roadway present at the current location. If the third-party mapping service returns such data, the method can set the value of the lane width in pixels (L_{W_p}) to the return value.

[0101] In other embodiments, the third-party mapping service may not return a lane width. In such an embodiment, the third-party mapping service may provide a bird's eye image of the roadway at the current location and a resolution. In an embodiment, the resolution can comprise a unit of measurement converting pixels to physical distances. Thus, as one example, one pixel may correspond to one foot. In such an embodiment, the method can automatically identify lane lines within the image (e.g., using a CNN or other machine learning approach) and then compute the number of pixels between each lane line. The method can then convert the lane width in pixels (L_{W_p}) to a real-world lane width distance (L_{W_r}) using the returned resolution.

[0102] In an alternative embodiment, the method can rely on user input to detect lane widths. In such an embodiment, the method can display the images returned from the third-party mapping service and display the image to a user. The user can then manually identify lane lines (e.g., by using a line drawing tool, touch screen, etc.). The method can then use the user markup to compute the distance between lane lines and compute the number of pixels between each lane line. The method can then convert the number of pixels to a real-world lane width distance (L_{W_r}) using the returned resolution.

[0103] In another embodiment, the method can attempt to automatically mark lane lines using, for example, a machine learning model. The method can then display the predicted lane lines to the user to allow the user to confirm, reject, and/or adjust the predicted markers. The method can then compute the number of pixels between each lane line. The method can then convert the number of pixels to a real-world lane width distance (L_{W_r}) using the returned resolution. Details of using a machine learning model to predict lane lines and/or horizon lines are described in the descriptions of FIGS. 2, 3A, 3C, and 3B.

[0104] In some embodiments, the result of the foregoing embodiments can be inconclusive. For example, image quality of the returned third-party service images may be unsuitable for annotation of lane lines and thus the lane widths are not able to be calculated. In such an embodiment, the method can revert to a geometric algorithm to determine a lane width, as detailed in commonly-owned Appl. No. 17/173,950, filed Feb. 11, 2021.

[0105] In step 708, the method stores the camera parameters. In one embodiment, step 708 comprises storing the camera height, horizon line, and road plane normal. In some embodiments, step 708 can optionally comprise storing the IPM (H) and the lane width (L_{W_p}). In an embodiment, the camera parameters are stored in a non-volatile storage device and are associated with a camera. Thus, the camera parameters may be reused during subsequent operations performed on images captured by a given camera, as discussed fully in step 610. In some embodiments, the method may be executed directly on the camera and stored on the camera (such as on the edge hardware onboard the vehicle). In other embodiments, the value of H, lane width and camera height may be calculated off-camera and stored off-camera (such as in the cloud and stored in a cloud database).

[0106] Returning to FIG. 6, if the method determines that the camera is initialized, the method proceeds to apply the IPM to line or curves represented by the CNN-predicted markers and horizon to identify lane lines in a given frame. As illustrated, in some embodiments, the method may execute step 610 on the sample frames used to initialize the camera in step 608 as well. Details of applying an IPM to a set of image frames to detect lane lines are provided in more detail in commonly-owned Appl. No. 17/173,950, filed Feb. 11, 2021 In step 612, the method transmits or outputs the perspective lane boundaries in step 612. In an embodiment, the method may transmit the line/curve data to a downstream processing device for further processing. For example, the method may transmit the data to a lane warning system to enable the system to determine if the vehicle crosses a lane boundary. In other embodiments, the outputting of the line or curve comprises displaying the line or curve on an in-vehicle display (e.g., a dash-mounted display or mobile phone). In an embodiment, the lane boundaries may be overlaid on top of the capture video frames.

[0107] In step 616, the method can additionally detect a distance to identified objects. As illustrated, steps 616 and 618 can be done in parallel with steps 610 and 612. Further, in some embodiments, steps 610 and 616 can be triggered asynchronously.

[0108] As illustrated, in some embodiments, the method may execute step 616 on the sample frames used to initialize the camera in step 608 as well. In an embodiment, any type of object detection system may be used to identify objects (e.g., via bounding boxes) within an image including detecting objects using DL object detectors such as Faster-RCNN, MobileNet-SSD,

EfficientDets, YoloV1, YoloV2, YoloV3, YoloV4, YoloV5, and similar such systems. Details of detecting object distances in step 608 were described in commonly-owned Appl. No. 17/173,950, filed Feb. 11, 2021. Finally, in step 616, the method transmits or outputs the distance data. In an embodiment, the distance data includes distances to detected objects. In some embodiments, the distance data includes bounding boxes for the detected objects. In some embodiments, the method may further detect lane boundary or lane lines/curves and may include these in the returned data. In an embodiment, the method may transmit the line/curve data to a downstream processing device for further processing. For example, the method may transmit the data to a collision detection system to enable the system to determine if the vehicle is too close to another object or vehicle.

[0109] FIG. 8 is a block diagram of a computing device according to some embodiments of the disclosure. In some embodiments, the computing device can be used to train and use the various ML models described previously.

[0110] As illustrated, the device includes a processor or central processing unit (CPU) such as CPU 802 in communication with a memory 804 via a bus 814. The device also includes one or more input/output (I/O) or peripheral devices 812. Examples of peripheral devices include, but are not limited to, network interfaces, audio interfaces, display devices, keypads, mice, keyboard, touch screens, illuminators, haptic interfaces, global positioning system (GPS) receivers, cameras, or other optical, thermal, or electromagnetic sensors.

[0111] In some embodiments, the CPU 802 may comprise a general-purpose CPU. The CPU 802 may comprise a single-core or multiple-core CPU. The CPU 802 may comprise a system-on-a-chip (SoC) or a similar embedded system. In some embodiments, a graphics processing unit (GPU) may be used in place of, or in combination with, a CPU 802. Memory 804 may comprise a memory system including a dynamic random-access memory (DRAM), static random-access memory (SRAM), Flash (e.g., NAND Flash), or combinations thereof. In one embodiment, the bus 814 may comprise a Peripheral Component Interconnect Express (PCIe) bus. In some embodiments, the bus 814 may comprise multiple busses instead of a single bus.

[0112] Memory 804 illustrates an example of computer storage media for the storage of information such as computer-readable instructions, data structures, program modules, or other data. Memory 804 can store a basic input/output system (BIOS) in read-only memory (ROM),

such as ROM 808 for controlling the low-level operation of the device. The memory can also store an operating system in random-access memory (RAM) for controlling the operation of the device

[0113] Applications 810 may include computer-executable instructions which, when executed by the device, perform any of the methods (or portions of the methods) described previously in the description of the preceding Figures. In some embodiments, the software or programs implementing the method embodiments can be read from a hard disk drive (not illustrated) and temporarily stored in RAM 806 by CPU 802. CPU 802 may then read the software or data from RAM 806, process them, and store them in RAM 806 again.

[0114] The device may optionally communicate with a base station (not shown) or directly with another computing device. One or more network interfaces in peripheral devices 812 are sometimes referred to as a transceiver, transceiving device, or network interface card (NIC).

[0115] An audio interface in peripheral devices 812 produces and receives audio signals such as the sound of a human voice. For example, an audio interface may be coupled to a speaker and microphone (not shown) to enable telecommunication with others or generate an audio acknowledgment for some action. Displays in peripheral devices 812 may comprise liquid crystal display (LCD), gas plasma, light-emitting diode (LED), or any other type of display device used with a computing device. A display may also include a touch-sensitive screen arranged to receive input from an object such as a stylus or a digit from a human hand.

[0116] A keypad in peripheral devices 812 may comprise any input device arranged to receive input from a user. An illuminator in peripheral devices 812 may provide a status indication or provide light. The device can also comprise an input/output interface in peripheral devices 812 for communication with external devices, using communication technologies, such as USB, infrared, Bluetooth™, or the like. A haptic interface in peripheral devices 812 provides tactile feedback to a user of the client device.

[0117] A GPS receiver in peripheral devices 812 can determine the physical coordinates of the device on the surface of the Earth, which typically outputs a location as latitude and longitude values. A GPS receiver can also employ other geo-positioning mechanisms, including, but not limited to, triangulation, assisted GPS (AGPS), E-OTD, CI, SAI, ETA, BSS, or the like, to further

determine the physical location of the device on the surface of the Earth. In one embodiment, however, the device may communicate through other components, providing other information that may be employed to determine the physical location of the device, including, for example, a media access control (MAC) address, Internet Protocol (IP) address, or the like.

[0118] The device may include more or fewer components than those shown in FIG. 8, depending on the deployment or usage of the device. For example, a server computing device, such as a rack-mounted server, may not include audio interfaces, displays, keypads, illuminators, haptic interfaces, Global Positioning System (GPS) receivers, or cameras/sensors. Some devices may include additional components not shown, such as graphics processing unit (GPU) devices, cryptographic co-processors, artificial intelligence (AI) accelerators, or other peripheral devices.

[0119] The subject matter disclosed above may, however, be embodied in a variety of different forms and, therefore, covered or claimed subject matter is intended to be construed as not being limited to any example embodiments set forth herein; example embodiments are provided merely to be illustrative. Likewise, a reasonably broad scope for claimed or covered subject matter is intended. Among other things, for example, subject matter may be embodied as methods, devices, components, or systems. Accordingly, embodiments may, for example, take the form of hardware, software, firmware, or any combination thereof (other than software per se). The preceding detailed description is, therefore, not intended to be taken in a limiting sense.

[0120] Throughout the specification and claims, terms may have nuanced meanings suggested or implied in context beyond an explicitly stated meaning. Likewise, the phrase "in an embodiment" as used herein does not necessarily refer to the same embodiment and the phrase "in another embodiment" as used herein does not necessarily refer to a different embodiment. It is intended, for example, that claimed subject matter include combinations of example embodiments in whole or in part.

[0121] In general, terminology may be understood at least in part from usage in context. For example, terms, such as "and," "or," or "and/or," as used herein may include a variety of meanings that may depend at least in part upon the context in which such terms are used. Typically, "or" if used to associate a list, such as A, B or C, is intended to mean A, B, and C, here used in the inclusive sense, as well as A, B or C, here used in the exclusive sense. In addition, the term "one

or more" as used herein, depending at least in part upon context, may be used to describe any feature, structure, or characteristic in a singular sense or may be used to describe combinations of features, structures, or characteristics in a plural sense. Similarly, terms, such as "a," "an," or "the," again, may be understood to convey a singular usage or to convey a plural usage, depending at least in part upon context. In addition, the term "based on" may be understood as not necessarily intended to convey an exclusive set of factors and may, instead, allow for existence of additional factors not necessarily expressly described, again, depending at least in part on context.

[0122] The present disclosure is described with reference to block diagrams and operational illustrations of methods and devices. It is understood that each block of the block diagrams or operational illustrations, and combinations of blocks in the block diagrams or operational illustrations, can be implemented by means of analog or digital hardware and computer program instructions. These computer program instructions can be provided to a processor of a general-purpose computer to alter its function as detailed herein, a special purpose computer, application-specific integrated circuit (ASIC), or other programmable data processing apparatus, such that the instructions, which execute via the processor of the computer or other programmable data processing apparatus, implement the functions/acts specified in the block diagrams or operational block or blocks. In some alternate implementations, the functions or acts noted in the blocks can occur out of the order noted in the operational illustrations. For example, two blocks shown in succession can in fact be executed substantially concurrently or the blocks can sometimes be executed in the reverse order, depending upon the functionality or acts involved.

[0123] These computer program instructions can be provided to a processor of a general purpose computer to alter its function to a special purpose; a special purpose computer; ASIC; or other programmable digital data processing apparatus, such that the instructions, which execute via the processor of the computer or other programmable data processing apparatus, implement the functions or acts specified in the block diagrams or operational block or blocks, thereby transforming their functionality in accordance with embodiments herein.

[0124] For the purposes of this disclosure a computer readable medium (or computer-readable storage medium) stores computer data, which data can include computer program code or instructions that are executable by a computer, in machine readable form. By way of example, and

not limitation, a computer readable medium may comprise computer readable storage media, for tangible or fixed storage of data, or communication media for transient interpretation of code-containing signals. Computer readable storage media, as used herein, refers to physical or tangible storage (as opposed to signals) and includes without limitation volatile and non-volatile, removable, and non-removable media implemented in any method or technology for the tangible storage of information such as computer-readable instructions, data structures, program modules or other data. Computer readable storage media includes, but is not limited to, RAM, ROM, EPROM, EEPROM, flash memory or other solid-state memory technology, CD-ROM, DVD, or other optical storage, magnetic cassettes, magnetic tape, magnetic disk storage or other magnetic storage devices, or any other physical or material medium which can be used to tangibly store the desired information or data or instructions and which can be accessed by a computer or processor.

[0125] For the purposes of this disclosure a module is a software, hardware, or firmware (or combinations thereof) system, process or functionality, or component thereof, that performs or facilitates the processes, features, and/or functions described herein (with or without human interaction or augmentation). A module can include sub-modules. Software components of a module may be stored on a computer readable medium for execution by a processor. Modules may be integral to one or more servers or be loaded and executed by one or more servers. One or more modules may be grouped into an engine or an application.

[0126] Those skilled in the art will recognize that the methods and systems of the present disclosure may be implemented in many manners and as such are not to be limited by the foregoing exemplary embodiments and examples. In other words, functional elements being performed by single or multiple components, in various combinations of hardware and software or firmware, and individual functions, may be distributed among software applications at either the client level or server level or both. In this regard, any number of the features of the different embodiments described herein may be combined into single or multiple embodiments, and alternate embodiments having fewer than, or more than, all the features described herein are possible.

[0127] Functionality may also be, in whole or in part, distributed among multiple components, in manners now known or to become known. Thus, a myriad or software, hardware, and firmware combinations are possible in achieving the functions, features, interfaces, and preferences

described herein. Moreover, the scope of the present disclosure covers conventionally known manners for carrying out the described features and functions and interfaces, as well as those variations and modifications that may be made to the hardware or software or firmware components described herein as would be understood by those skilled in the art now and hereafter.

[0128] Furthermore, the embodiments of methods presented and described as flowcharts in this disclosure are provided by way of example to provide a more complete understanding of the technology. The disclosed methods are not limited to the operations and logical flow presented herein. Alternative embodiments are contemplated in which the order of the various operations is altered and in which sub-operations described as being part of a larger operation are performed independently.

[0129] While various embodiments have been described for purposes of this disclosure, such embodiments should not be deemed to limit the teaching of this disclosure to those embodiments. Various changes and modifications may be made to the elements and operations described above to obtain a result that remains within the scope of the systems and processes described in this disclosure.

PTO/AIA/15 (10-17)
Approved for use through 11/30/2020. OMB 0651-0032
U.S. Patent and Trademark Office; U.S. DEPARTMENT OF COMMERCE
Under the Paperwork Reduction Act of 1995 no persons are required to respond to a collection of information unless it displays a valid OMB control number.

UTILITY PATENT APPLICATION TRANSMITTAL

(Only for new nonprovisional applications under 37 CFR 1.53(b))

Attorney Docket No.	189908.000302
First Named Inventor	HASSAN, Ali
Title	CAMERA INITIALIZATION FOR LANE DETECTION AND DISTANCE ESTIMATION US
Priority Mail Express® Label No.	

APPLICATION ELEMENTS

See MPEP chapter 600 concerning utility patent application contents.

1. ☐ **Fee Transmittal Form** (PTO/SB/17 or equivalent)
2. ☐ **Applicant asserts small entity status.** See 37 CFR 1.27
3. ☐ **Applicant certifies micro entity status.** See 37 CFR 1.29. Applicant must attach form PTO/SB/15A or B or equivalent.
4. ☑ **Specification** [*Total Pages* 34] Both the claims and abstract must start on a new page. *(See MPEP § 608.01(a) for information on the preferred arrangement)*
5. ☑ **Drawing(s)** (35 U.S.C. 113) [*Total Sheets* 10]
6. **Inventor's Oath or Declaration** [*Total Pages* 3] *(including substitute statements under 37 CFR 1.64 and assignments serving as an oath or declaration under 37 CFR 1.63(e))*
   a. ☐ Newly executed (original or copy)
   b. ☑ A copy from a prior application (37 CFR 1.63(d))
7. ☑ **Application Data Sheet** ** See note below.* See 37 CFR 1.76 (PTO/AIA/14 or equivalent)
8. **CD-ROM or CD-R** in duplicate, large table, or Computer Program (*Appendix*)
   ☐ Landscape Table on CD
9. **Nucleotide and/or Amino Acid Sequence Submission** (*if applicable, items a. – c. are required*)
   a. ☐ Computer Readable Form (CRF)
   b. ☐ Specification Sequence Listing on:
      i. ☐ CD-ROM or CD-R (2 copies); or
      ii. ☐ Paper
   c. ☐ Statements verifying identity of above copies

ADDRESS TO: **Commissioner for Patents, P.O. Box 1450, Alexandria, VA 22313-1450**

ACCOMPANYING APPLICATION PAPERS

10. ☐ **Assignment Papers** (cover sheet & document(s))
    Name of Assignee _____
11. ☑ **37 CFR 3.73(c) Statement** (*when there is an assignee*) ☑ **Power of Attorney**
12. ☐ **English Translation Document** (*if applicable*)
13. ☑ **Information Disclosure Statement** (PTO/SB/08 or PTO-1449)
    ☑ Copies of citations attached
14. ☐ **Preliminary Amendment**
15. ☐ **Return Receipt Postcard** (*MPEP § 503*) (*Should be specifically itemized*)
16. ☐ **Certified Copy of Priority Document(s)** (*if foreign priority is claimed*)
17. ☐ **Nonpublication Request** Under 35 U.S.C. 122(b)(2)(B)(i). Applicant must attach form PTO/SB/35 or equivalent.
18. ☐ **Other:** _____

***Note**: (1) Benefit claims under 37 CFR 1.78 and foreign priority claims under 1.55 **must** be included in an Application Data Sheet (ADS).
(2) For applications filed under 35 U.S.C. 111, the application must contain an ADS specifying the applicant if the applicant is an assignee, person to whom the inventor is under an obligation to assign, or person who otherwise shows sufficient proprietary interest in the matter. See 37 CFR 1.46(b).

19. CORRESPONDENCE ADDRESS

☑ The address associated with Customer Number: 32361 **OR** ☐ Correspondence address below

Name					
Address					
City		State		Zip Code	
Country		Telephone		Email	

Signature	/George Zalepa/	Date	December 1, 2023
Name (Print/Type)	George Zalepa	Registration No. (Attorney/Agent)	72706

This collection of information is required by 37 CFR 1.53(b). The information is required to obtain or retain a benefit by the public which is to file (and by the USPTO to process) an application. Confidentiality is governed by 35 U.S.C. 122 and 37 CFR 1.11 and 1.14. This collection is estimated to take 12 minutes to complete, including gathering, preparing, and submitting the completed application form to the USPTO. Time will vary depending upon the individual case. Any comments on the amount of time you require to complete this form and/or suggestions for reducing this burden, should be sent to the Chief Information Officer, U.S. Patent and Trademark Office, U.S. Department of Commerce, P.O. Box 1450, Alexandria, VA 22313-1450. DO NOT SEND FEES OR COMPLETED FORMS TO THIS ADDRESS. **SEND TO: Commissioner for Patents, P.O. Box 1450, Alexandria, VA 22313-1450.**

If you need assistance in completing the form, call 1-800-PTO-9199 and select option 2.

Privacy Act Statement

The **Privacy Act of 1974 (P.L. 93-579)** requires that you be given certain information in connection with your submission of the attached form related to a patent application or patent. Accordingly, pursuant to the requirements of the Act, please be advised that: (1) the general authority for the collection of this information is 35 U.S.C. 2(b)(2); (2) furnishing of the information solicited is voluntary; and (3) the principal purpose for which the information is used by the U.S. Patent and Trademark Office is to process and/or examine your submission related to a patent application or patent. If you do not furnish the requested information, the U.S. Patent and Trademark Office may not be able to process and/or examine your submission, which may result in termination of proceedings or abandonment of the application or expiration of the patent.

The information provided by you in this form will be subject to the following routine uses:

1. The information on this form will be treated confidentially to the extent allowed under the Freedom of Information Act (5 U.S.C. 552) and the Privacy Act (5 U.S.C 552a). Records from this system of records may be disclosed to the Department of Justice to determine whether disclosure of these records is required by the Freedom of Information Act.
2. A record from this system of records may be disclosed, as a routine use, in the course of presenting evidence to a court, magistrate, or administrative tribunal, including disclosures to opposing counsel in the course of settlement negotiations.
3. A record in this system of records may be disclosed, as a routine use, to a Member of Congress submitting a request involving an individual, to whom the record pertains, when the individual has requested assistance from the Member with respect to the subject matter of the record.
4. A record in this system of records may be disclosed, as a routine use, to a contractor of the Agency having need for the information in order to perform a contract. Recipients of information shall be required to comply with the requirements of the Privacy Act of 1974, as amended, pursuant to 5 U.S.C. 552a(m).
5. A record related to an International Application filed under the Patent Cooperation Treaty in this system of records may be disclosed, as a routine use, to the International Bureau of the World Intellectual Property Organization, pursuant to the Patent Cooperation Treaty.
6. A record in this system of records may be disclosed, as a routine use, to another federal agency for purposes of National Security review (35 U.S.C. 181) and for review pursuant to the Atomic Energy Act (42 U.S.C. 218(c)).
7. A record from this system of records may be disclosed, as a routine use, to the Administrator, General Services, or his/her designee, during an inspection of records conducted by GSA as part of that agency's responsibility to recommend improvements in records management practices and programs, under authority of 44 U.S.C. 2904 and 2906. Such disclosure shall be made in accordance with the GSA regulations governing inspection of records for this purpose, and any other relevant (*i.e.*, GSA or Commerce) directive. Such disclosure shall not be used to make determinations about individuals.
8. A record from this system of records may be disclosed, as a routine use, to the public after either publication of the application pursuant to 35 U.S.C. 122(b) or issuance of a patent pursuant to 35 U.S.C. 151. Further, a record may be disclosed, subject to the limitations of 37 CFR 1.14, as a routine use, to the public if the record was filed in an application which became abandoned or in which the proceedings were terminated and which application is referenced by either a published application, an application open to public inspection or an issued patent.
9. A record from this system of records may be disclosed, as a routine use, to a Federal, State, or local law enforcement agency, if the USPTO becomes aware of a violation or potential violation of law or regulation.

PTO/SB/08a (01-22)
Approved for use through 05/31/2024. OMB 0651-0031
U.S. Patent and Trademark Office; U.S. DEPARTMENT OF COMMERCE

Under the Paperwork Reduction Act of 1995, no persons are required to respond to a collection of information unless it contains a valid OMB control number.

INFORMATION DISCLOSURE STATEMENT BY APPLICANT

(Not for submission under 37 CFR 1.99)

Application Number	
Filing Date	
First Named Inventor	HASSAN, Ali
Art Unit	
Examiner Name	
Attorney Docket Number	189908.000302

U.S.PATENTS Remove

Examiner Initial*	Cite No	Patent Number	Kind Code[1]	Issue Date	Name of Patentee or Applicant of cited Document	Pages,Columns,Lines where Relevant Passages or Relevant Figures Appear
	1	11205284	B2	2021-12-21	Dal et al.	

If you wish to add additional U.S. Patent citation information please click the Add button. Add

U.S.PATENT APPLICATION PUBLICATIONS Remove

Examiner Initial*	Cite No	Publication Number	Kind Code[1]	Publication Date	Name of Patentee or Applicant of cited Document	Pages,Columns,Lines where Relevant Passages or Relevant Figures Appear
	1	20210049780	A1	2021-02-18	Westmacot et al.	
	2	20210009166	A1	2021-01-14	Li et al.	
	3	20190009166	A1	2019-07-25	Brauch, Adam	
	4	20190102674	A1	2019-04-04	Kwant et al.	
	5	20220105947	A1	2022-04-07	Postnikov et al.	

INFORMATION DISCLOSURE STATEMENT BY APPLICANT (Not for submission under 37 CFR 1.99)		
	Application Number	
	Filing Date	
	First Named Inventor	HASSAN, Ali
	Art Unit	
	Examiner Name	
	Attorney Docket Number	189908.000302

	6	20190034740	A1	2019-01-31	Kwant et al.	
	7	20200357138	A1	2020-11-12	Xiang et al.	
	8	20180262678	A1	2018-09-13	Hunt et al.	
	9	20150177370	A1	2015-06-25	Trummer et al.	
	10	20180046867	A1	2018-02-15	Yang, Lei	
	11	20170177951	A1	2017-06-22	Yang et al.	
	12	20230106961	A1	2023-04-06	Hassan et al.	
	13	20190205667	A1	2019-07-04	Avidan et al.	

If you wish to add additional U.S. Published Application citation information please click the Add button. Add

FOREIGN PATENT DOCUMENTS Remove

Examiner Initial*	Cite No	Foreign Document Number[3]	Country Code[2] ¡	Kind Code[4]	Publication Date	Name of Patentee or Applicant of cited Document	Pages,Columns,Lines where Relevant Passages or Relevant Figures Appear	T[5]
	1							☐

If you wish to add additional Foreign Patent Document citation information please click the Add button Add

INFORMATION DISCLOSURE STATEMENT BY APPLICANT (**Not for submission under 37 CFR 1.99)**		
	Application Number	
	Filing Date	
	First Named Inventor	HASSAN, Ali
	Art Unit	
	Examiner Name	
	Attorney Docket Number	189908.000302

NON-PATENT LITERATURE DOCUMENTS Remove			
Examiner Initials*	Cite No	Include name of the author (in CAPITAL LETTERS), title of the article (when appropriate), title of the item (book, magazine, journal, serial, symposium, catalog, etc), date, pages(s), volume-issue number(s), publisher, city and/or country where published.	T[5]
	1	International Search Report and Written Opinion to corresponding International Application No. PCT/US22/45131 mailed January 31, 2023 (9 pages).	☐

If you wish to add additional non-patent literature document citation information please click the Add button Add

EXAMINER SIGNATURE			
Examiner Signature		Date Considered	

*EXAMINER: Initial if reference considered, whether or not citation is in conformance with MPEP 609. Draw line through a citation if not in conformance and not considered. Include copy of this form with next communication to applicant.

[1] See Kind Codes of USPTO Patent Documents at www.USPTO.GOV or MPEP 901.04. [2] Enter office that issued the document, by the two-letter code (WIPO Standard ST.3). [3] For Japanese patent documents, the indication of the year of the reign of the Emperor must precede the serial number of the patent document. [4] Kind of document by the appropriate symbols as indicated on the document under WIPO Standard ST.16 if possible. [5] Applicant is to place a check mark here if English language translation is attached.

INFORMATION DISCLOSURE STATEMENT BY APPLICANT (Not for submission under 37 CFR 1.99)		
	Application Number	
	Filing Date	
	First Named Inventor	HASSAN, Ali
	Art Unit	
	Examiner Name	
	Attorney Docket Number	189908.000302

CERTIFICATION STATEMENT

Please see 37 CFR 1.97 and 1.98 to make the appropriate selection(s):

☐ That each item of information contained in the information disclosure statement was first cited in any communication from a foreign patent office in a counterpart foreign application not more than three months prior to the filing of the information disclosure statement. See 37 CFR 1.97(e)(1).

OR

☐ That no item of information contained in the information disclosure statement was cited in a communication from a foreign patent office in a counterpart foreign application, and, to the knowledge of the person signing the certification after making reasonable inquiry, no item of information contained in the information disclosure statement was known to any individual designated in 37 CFR 1.56(c) more than three months prior to the filing of the information disclosure statement. See 37 CFR 1.97(e)(2).

☐ See attached certification statement.

☐ The fee set forth in 37 CFR 1.17 (p) has been submitted herewith.

☒ A certification statement is not submitted herewith.

SIGNATURE

A signature of the applicant or representative is required in accordance with CFR 1.33, 10.18. Please see CFR 1.4(d) for the form of the signature.

Signature	/George Zalepa/	Date (YYYY-MM-DD)	2023-12-01
Name/Print	George Zalepa	Registration Number	72706

This collection of information is required by 37 CFR 1.97 and 1.98. The information is required to obtain or retain a benefit by the public which is to file (and by the USPTO to process) an application. Confidentiality is governed by 35 U.S.C. 122 and 37 CFR 1.14. This collection is estimated to take 1 hour to complete, including gathering, preparing and submitting the completed application form to the USPTO. Time will vary depending upon the individual case. Any comments on the amount of time you require to complete this form and/or suggestions for reducing this burden, should be sent to the Chief Information Officer, U.S. Patent and Trademark Office, U.S. Department of Commerce, P.O. Box 1450, Alexandria, VA 22313-1450. DO NOT SEND FEES OR COMPLETED FORMS TO THIS ADDRESS. **SEND TO: Commissioner for Patents, P.O. Box 1450, Alexandria, VA 22313-1450.**

Privacy Act Statement

The Privacy Act of 1974 (P.L. 93-579) requires that you be given certain information in connection with your submission of the attached form related to a patent application or patent. Accordingly, pursuant to the requirements of the Act, please be advised that: (1) the general authority for the collection of this information is 35 U.S.C. 2(b)(2); (2) furnishing of the information solicited is voluntary; and (3) the principal purpose for which the information is used by the U.S. Patent and Trademark Office is to process and/or examine your submission related to a patent application or patent. If you do not furnish the requested information, the U.S. Patent and Trademark Office may not be able to process and/or examine your submission, which may result in termination of proceedings or abandonment of the application or expiration of the patent.

The information provided by you in this form will be subject to the following routine uses:

1. The information on this form will be treated confidentially to the extent allowed under the Freedom of Information Act (5 U.S.C. 552) and the Privacy Act (5 U.S.C. 552a). Records from this system of records may be disclosed to the Department of Justice to determine whether the Freedom of Information Act requires disclosure of these record s.

2. A record from this system of records may be disclosed, as a routine use, in the course of presenting evidence to a court, magistrate, or administrative tribunal, including disclosures to opposing counsel in the course of settlement negotiations.

3. A record in this system of records may be disclosed, as a routine use, to a Member of Congress submitting a request involving an individual, to whom the record pertains, when the individual has requested assistance from the Member with respect to the subject matter of the record.

4. A record in this system of records may be disclosed, as a routine use, to a contractor of the Agency having need for the information in order to perform a contract. Recipients of information shall be required to comply with the requirements of the Privacy Act of 1974, as amended, pursuant to 5 U.S.C. 552a(m).

5. A record related to an International Application filed under the Patent Cooperation Treaty in this system of records may be disclosed, as a routine use, to the International Bureau of the World Intellectual Property Organization, pursuant to the Patent Cooperation Treaty.

6. A record in this system of records may be disclosed, as a routine use, to another federal agency for purposes of National Security review (35 U.S.C. 181) and for review pursuant to the Atomic Energy Act (42 U.S.C. 218(c)).

7. A record from this system of records may be disclosed, as a routine use, to the Administrator, General Services, or his/her designee, during an inspection of records conducted by GSA as part of that agency's responsibility to recommend improvements in records management practices and programs, under authority of 44 U.S.C. 2904 and 2906. Such disclosure shall be made in accordance with the GSA regulations governing inspection of records for this purpose, and any other relevant (i.e., GSA or Commerce) directive. Such disclosure shall not be used to make determinations about individuals.

8. A record from this system of records may be disclosed, as a routine use, to the public after either publication of the application pursuant to 35 U.S.C. 122(b) or issuance of a patent pursuant to 35 U.S.C. 151. Further, a record may be disclosed, subject to the limitations of 37 CFR 1.14, as a routine use, to the public if the record was filed in an application which became abandoned or in which the proceedings were terminated and which application is referenced by either a published application, an application open to public inspections or an issued patent.

9. A record from this system of records may be disclosed, as a routine use, to a Federal, State, or local law enforcement agency, if the USPTO becomes aware of a violation or potential violation of law or regulation.

CLAIMS

What is claimed is:

1. A method comprising:

receiving, over a network from a camera device, a video comprising a set of image frames;

identifying one or more lines in the video using a predictive model, the one or more lines including a horizon line;

computing at least one camera parameter based on the one or more lines;

overlaying the one or more lines on the video to generate an overlaid video;

transmitting the overlaid video to an annotator device for manual review;

receiving a confirmation from the annotator device, the confirmation indicating that the one or more lines are accurate; and

transmitting data representing the at least one camera parameter to the camera device.

2. The method of claim 1, wherein the one or more lines includes at least one lane line of a roadway.

3. The method of claim 1, wherein computing the at least one camera parameter comprises predicting the at least one camera parameter using the predictive model.

4. The method of claim 1, wherein computing the at least one camera parameter comprises predicting the at least one camera parameter using a second predictive model.

5. The method of claim 1, wherein the at least one camera parameter comprises a camera height and road plane normal.

6. The method of claim 1, further comprising:

receiving, over the network from the camera device, a second video comprising a second set of images;

transmitting the second video to the annotator device for manual review;

adding, by the annotator device, one or more lines to the second video to generate a second overlaid video;

predicting, using the one or more lines in the second overlaid video, at least one camera parameter; and

transmitting the at least one camera parameter to the annotator device.

7. The method of claim 6, further comprising:

receiving a second confirmation from the annotator device, the second confirmation indicating that the at least one camera parameter are accurate; and

transmitting data representing the one or more lines of the second video to the camera device.

8. A method comprising:

receiving a video, the video comprising one or more image frames;

generating a set of intermediate features representing the video using a backbone network;

inputting the set of intermediate features into a lane or horizon prediction head, the lane or horizon prediction head comprising a neural network;

predicting a horizon line using the lane or horizon prediction head, the horizon line comprising a set of horizon markers; and

using the horizon line to compute at least one camera parameter.

9. The method of claim 8, the backbone network comprising at least one convolutional layer.

10. The method of claim 8, wherein the at least one camera parameter comprises one of a camera height, camera angle, and road plane normal.

11. The method of claim 8, further comprising predicting, using the lane or horizon prediction head, at least one lane line, the at least one lane line comprising a set of lane line markers.

12. The method of claim 11, wherein generating a plurality of lane key points comprises generating a plurality of lane key points for two lane lines on a roadway.

13. The method of claim 8, further comprising detecting a movement of a camera that captured the video and re-initializing the at least one camera parameter in response.

14. The method of claim 8, wherein the lane or horizon prediction head comprises at least one convolutional layer.

15. The method of claim 14, wherein the lane or horizon prediction head further comprises at least one fully connected layer receiving an output of the convolutional layer.

16. The method of claim 14, wherein the lane or horizon prediction head further comprises a layer selected from the group consisting of a recurrent neural network layer, long short-term memory layer, and gated recurrent unit layer.

17. A method comprising:

receiving a video, the video comprising one or more image frames;

generating a set of intermediate features representing the video using a backbone network;

inputting the set of intermediate features into a camera parameter estimation head, the camera parameter estimation head comprising a neural network; and

predicting at least one camera parameter using the camera parameter estimation head, the camera parameter estimation head trained using an output of the backbone network and an output of a lane and horizon line prediction head.

18. The method of claim 17, wherein the backbone network, camera parameter estimation head, lane and horizon line prediction head are trained using a joint loss function, the joint loss function aggregating the losses of the lane and horizon line prediction head and the neural network.

19. The method of claim 17, further comprising predicting a horizon line using the lane and horizon line prediction head, the lane and horizon line prediction head comprising a neural network configured to receive the set of intermediate features as an input.

20. The method of claim 17, wherein the camera parameter estimation head comprises at least one convolutional layer.

UNITED STATES
PATENT AND TRADEMARK OFFICE

P.O. Box 1450
Alexandria, VA 22313 - 1450
www.uspto.gov

ELECTRONIC ACKNOWLEDGEMENT RECEIPT

APPLICATION #	RECEIPT DATE / TIME	ATTORNEY DOCKET #
18/527,226	**12/01/2023 10:34:01 PM Z ET**	**189908.000302**

Title of Invention

CAMERA INITIALIZATION FOR LANE DETECTION AND DISTANCE ESTIMATION USING SINGLE-VIEW GEOMETRY

Application Information

APPLICATION TYPE	Utility - Nonprovisional Application under 35 USC 111(a)	PATENT #	-
CONFIRMATION #	7088	FILED BY	Judi Cordo
PATENT CENTER #	63465722	FILING DATE	-
CUSTOMER #	32361	FIRST NAMED INVENTOR	Ali HASSAN
CORRESPONDENCE ADDRESS	-	AUTHORIZED BY	George Zalepa

Documents

TOTAL DOCUMENTS: 12

DOCUMENT	PAGES	DESCRIPTION	SIZE (KB)
189908_000302_ads.pdf	9	Application Data Sheet	1227 KB
189908_000302_transmittal.pdf	2	Transmittal of New Application	274 KB
189908_000302_spec-SPEC.docx	29	Specification	85 KB
Warning: Bookmarks were found and have been removed.			
189908_000302_claims-CLM.docx	4	Claims	63 KB

189908_000302_abstract-ABST.docx	1	Abstract	62 KB
189908_000302_figs.pdf	10	Drawings-other than black and white line drawings	4231 KB
189908_000302_decs.pdf	3	Oath or Declaration filed	265 KB
189908_000302_assignee_statement.pdf	2	Assignee showing of ownership per 37 CFR 3.73	91 KB
189908_000302_power.pdf	1	Power of Attorney	93 KB
189908_000302_ids.pdf	5	Information Disclosure Statement (IDS) Form (SB08)	1234 KB
189908_000302_npl1_isr_wo.pdf	9	Other reference-Patent/Application/Search Documents	810 KB
189908_000302_pdf_version_of_docx_docs.pdf	34	Auxiliary PDF of Application	304 KB

Digest

DOCUMENT	MESSAGE DIGEST(SHA-512)
189908_000302_ads.pdf	5EEFEE11B57F109935FDAE1C9AE8F99EB7D501BB88C24D8E6005D719A6FBA604B0A75DD45498A898AAAADF10967052DD492BA5296F27E0665639DE6A99F0EEF0
189908_000302_transmittal.pdf	71EDDCA27F7D0D0D4D44FBF2B82ACE0964203015E99CCF045CB2ED9695B3E190FAA121DA107BE68F490A6E84D38EC552B9F836D09EA3296AE58EFD118A3478E2
189908_000302_spec-SPEC.docx	DAAD97375985FA2497864F9067C197C0AAD110C3E23A37F8B49E059000EAED49570C8A5686749E07987492A81343D2451CEFF7608976A4A9974A50958783F01C

189908_000302_claims-CLM.docx	7C79629C7CD1F1A30289A39F568C82649F9D8253E32055755BC7FCB2B34346BB201582BFC2BDD75BCF9B3AB3B46AD4143C9507B944841CE6E2D69DFB65FEA5D4
189908_000302_abstract-ABST.docx	402FB020F4150E1C77BBCF5F79378C5658A7BD6B044F379C945B2018C8562CC13287E2B5D7F8EB818A188268B2EF788F51A77EAA258C37B555E1B24703D0875C
189908_000302_figs.pdf	466F73B3DE25C0FCB0741893AFB9EBFC1BFF1E91FAA96FDFCDCD412CF565217A6FB0F0509A2AC60B7FD06E68BADB868F13DD28B46D7D1D1BA0AEA8F0D3CDBC8D
189908_000302_decs.pdf	5FB876347D1AAA14723EE81F68EEB15BDF31E2041A8B8E07CD4EDC9A9A864497DC9379765FC4351E47D895EE3278D3FAB4C06084CE1D222F777EFAF1833263A1
189908_000302_assignee_statement.pdf	B821DD1BB4B2557368FF9141F3FDF9EA734FB94B03600E186257EB55B87FE3F352F10A980F5E037782E1B2BE091F552905DE47BEAD7D60AD9E0577D508549352
189908_000302_power.pdf	CDEEBE4600CC650820CA7270549056CE53A79490BF6A2BD662BCF2D12147A7B1156CBB69A8F1E2E554F4C945CE143AFD0E8885D5AD35898F3DCAAB096B0A062D
189908_000302_ids.pdf	34D6A0BE14EF3CBD1F18A7AEE34AC8849DC1CD726C9D20B8D7AED11A097DE55717498CACE9652CD1414C737211D13BA02ED664B308D31DD3167D0837C8916A71
189908_000302_npl1_isr_wo.pdf	383C297C792B42B6F77CF17D5F29463F4843324D36B0188349BB5B47E2414D8BA5471789F6E7C010FC7F5405610A2A33AA251B63EDD3F89DC0163AE99B125941
189908_000302_pdf_version_of_docx_docs.pdf	2276C23EDDCE3A08E8C8CEBA91991503474AFD7FAE5250BD9BE14C7481BB9352A9AC8E6E2D4659BDDFD3B9FDD493A9745E673DB7EBD26A2362555BFE9F79BDB3

This Acknowledgement Receipt evidences receipt on the noted date by the USPTO of the indicated documents, characterized by the applicant, and including page counts, where applicable. It serves as evidence of receipt similar to a Post Card, as described in MPEP 503.

New Applications Under 35 U.S.C. 111

If a new application is being filed and the application includes the necessary components for filing date (see 37 CFR 1.53(b)-(d) and MPEP 506), a Filing Receipt (37 CFR 1.54) will be issued in due course and the date shown on this Acknowledgement Receipt will establish the filing date of the application

National Stage of an International Application under 35 U.S.C. 371

If a timely submission to enter the national stage of an international application is compliant with the conditions of 35 U.S.C. 371 and other applicable requirements a Form PCT/DO/EO/903 indicating acceptance of the application as a national stage submission under 35 U.S.C. 371 will be issued in addition to the Filing Receipt, in due course.

New International Application Filed with the USPTO as a Receiving Office

If a new international application is being filed and the international application includes the necessary components for an international filing date (see PCT Article 11 and MPEP 1810), a Notification of the International Application Number and of the International Filing Date (Form PCT/RO/105) will be issued in due course, subject to prescriptions concerning national security, and the date shown on this Acknowledgement Receipt will establish the international filing date of the application.

PTO/AIA/01 (06-12)
Approved for use through 11/30/2020. OMB 0651-0032
U.S. Patent and Trademark Office; U.S. DEPARTMENT OF COMMERCE
Under the Paperwork Reduction Act of 1995, no persons are required to respond to a collection of information unless it displays a valid OMB control number.

DECLARATION (37 CFR 1.63) FOR UTILITY OR DESIGN APPLICATION USING AN APPLICATION DATA SHEET (37 CFR 1.76)

Title of Invention	CAMERA CALIBRATION FOR LANE DETECTION AND DISTANCE ESTIMATION USING SINGLE-VIEW GEOMETRY AND DEEP LEARNING

As the below named inventor, I hereby declare that:

This declaration is directed to:

- [■] The attached application, or
- [ ] United States application or PCT international application number _____ filed on _____.

The above-identified application was made or authorized to be made by me.

I believe that I am the original inventor or an original joint inventor of a claimed invention in the application.

I hereby acknowledge that any willful false statement made in this declaration is punishable under 18 U.S.C. 1001 by fine or imprisonment of not more than **five** (5) years, or both.

WARNING:

Petitioner/applicant is cautioned to avoid submitting personal information in documents filed in a patent application that may contribute to identity theft. Personal information such as social security numbers, bank account numbers, or credit card numbers (other than a check or credit card authorization form PTO-2038 submitted for payment purposes) is never required by the USPTO to support a petition or an application. If this type of personal information is included in documents submitted to the USPTO, petitioners/applicants should consider redacting such personal information from the documents before submitting them to the USPTO. Petitioner/applicant is advised that the record of a patent application is available to the public after publication of the application (unless a non-publication request in compliance with 37 CFR 1.213(a) is made in the application) or issuance of a patent. Furthermore, the record from an abandoned application may also be available to the public if the application is referenced in a published application or an issued patent (see 37 CFR 1.14). Checks and credit card authorization forms PTO-2038 submitted for payment purposes are not retained in the application file and therefore are not publicly available.

LEGAL NAME OF INVENTOR

Inventor: Ali Hassan Date (Optional): _____

Signature: Ali Hassan (Sep 26, 2022 18:18 EDT)

Note: An application data sheet (PTO/SB/14 or equivalent), including naming the entire inventive entity, must accompany this form or **must have been previously filed**. Use an additional PTO/AIA/01 form for each additional inventor.

This collection of information is required by 35 U.S.C. 115 and 37 CFR 1.63. The information is required to obtain or retain a benefit by the public which is to file (and by the USPTO to process) an application. Confidentiality is governed by 35 U.S.C. 122 and 37 CFR 1.11 and 1.14. This collection is estimated to take 1 minute to complete, including gathering, preparing, and submitting the completed application form to the USPTO. Time will vary depending upon the individual case. Any comments on the amount of time you require to complete this form and/or suggestions for reducing this burden, should be sent to the Chief Information Officer, U.S. Patent and Trademark Office, U.S. Department of Commerce, P.O. Box 1450, Alexandria, VA 22313-1450. DO NOT SEND FEES OR COMPLETED FORMS TO THIS ADDRESS. **SEND TO: Commissioner for Patents, P.O. Box 1450, Alexandria, VA 22313-1450.**

If you need assistance in completing the form, call 1-800-PTO-9199 and select option 2.

PTO/AIA/01 (06-12)
Approved for use through 11/30/2020. OMB 0651-0032
U.S. Patent and Trademark Office; U.S. DEPARTMENT OF COMMERCE
Under the Paperwork Reduction Act of 1995, no persons are required to respond to a collection of information unless it displays a valid OMB control number.

DECLARATION (37 CFR 1.63) FOR UTILITY OR DESIGN APPLICATION USING AN APPLICATION DATA SHEET (37 CFR 1.76)

Title of Invention	CAMERA CALIBRATION FOR LANE DETECTION AND DISTANCE ESTIMATION USING SINGLE-VIEW GEOMETRY AND DEEP LEARNING

As the below named inventor, I hereby declare that:

This declaration is directed to:

- [x] The attached application, or
- [ ] United States application or PCT international application number _____

filed on _____.

The above-identified application was made or authorized to be made by me.

I believe that I am the original inventor or an original joint inventor of a claimed invention in the application.

I hereby acknowledge that any willful false statement made in this declaration is punishable under 18 U.S.C. 1001 by fine or imprisonment of not more than **five** (5) years, or both.

WARNING:

Petitioner/applicant is cautioned to avoid submitting personal information in documents filed in a patent application that may contribute to identity theft. Personal information such as social security numbers, bank account numbers, or credit card numbers (other than a check or credit card authorization form PTO-2038 submitted for payment purposes) is never required by the USPTO to support a petition or an application. If this type of personal information is included in documents submitted to the USPTO, petitioners/applicants should consider redacting such personal information from the documents before submitting them to the USPTO. Petitioner/applicant is advised that the record of a patent application is available to the public after publication of the application (unless a non-publication request in compliance with 37 CFR 1.213(a) is made in the application) or issuance of a patent. Furthermore, the record from an abandoned application may also be available to the public if the application is referenced in a published application or an issued patent (see 37 CFR 1.14). Checks and credit card authorization forms PTO-2038 submitted for payment purposes are not retained in the application file and therefore are not publicly available.

LEGAL NAME OF INVENTOR

Inventor: Ahmed Ali Date (Optional) : _____

Signature: ahmedali
ahmedali [Sep 10, 2021 02:00 GMT+8]

Note: An application data sheet (PTO/SB/14 or equivalent), including naming the entire inventive entity, must accompany this form or **must have been previously filed**. Use an additional PTO/AIA/01 form for each additional inventor.

This collection of information is required by 35 U.S.C. 115 and 37 CFR 1.63. The information is required to obtain or retain a benefit by the public which is to file (and by the USPTO to process) an application. Confidentiality is governed by 35 U.S.C. 122 and 37 CFR 1.11 and 1.14. This collection is estimated to take 1 minute to complete, including gathering, preparing, and submitting the completed application form to the USPTO. Time will vary depending upon the individual case. Any comments on the amount of time you require to complete this form and/or suggestions for reducing this burden, should be sent to the Chief Information Officer, U.S. Patent and Trademark Office, U.S. Department of Commerce, P.O. Box 1450, Alexandria, VA 22313-1450. DO NOT SEND FEES OR COMPLETED FORMS TO THIS ADDRESS. **SEND TO: Commissioner for Patents, P.O. Box 1450, Alexandria, VA 22313-1450.**

If you need assistance in completing the form, call 1-800-PTO-9199 and select option 2.

PTO/AIA/01 (06-12)
Approved for use through 11/30/2020. OMB 0651-0032
U.S. Patent and Trademark Office; U.S. DEPARTMENT OF COMMERCE
Under the Paperwork Reduction Act of 1995, no persons are required to respond to a collection of information unless it displays a valid OMB control number.

DECLARATION (37 CFR 1.63) FOR UTILITY OR DESIGN APPLICATION USING AN APPLICATION DATA SHEET (37 CFR 1.76)

Title of Invention	CAMERA CALIBRATION FOR LANE DETECTION AND DISTANCE ESTIMATION USING SINGLE-VIEW GEOMETRY AND DEEP LEARNING

As the below named inventor, I hereby declare that:

This declaration is directed to:

- [■] The attached application, or
- [ ] United States application or PCT international application number _____ filed on _____.

The above-identified application was made or authorized to be made by me.

I believe that I am the original inventor or an original joint inventor of a claimed invention in the application.

I hereby acknowledge that any willful false statement made in this declaration is punishable under 18 U.S.C. 1001 by fine or imprisonment of not more than **five** (5) years, or both.

WARNING:

Petitioner/applicant is cautioned to avoid submitting personal information in documents filed in a patent application that may contribute to identity theft. Personal information such as social security numbers, bank account numbers, or credit card numbers (other than a check or credit card authorization form PTO-2038 submitted for payment purposes) is never required by the USPTO to support a petition or an application. If this type of personal information is included in documents submitted to the USPTO, petitioners/applicants should consider redacting such personal information from the documents before submitting them to the USPTO. Petitioner/applicant is advised that the record of a patent application is available to the public after publication of the application (unless a non-publication request in compliance with 37 CFR 1.213(a) is made in the application) or issuance of a patent. Furthermore, the record from an abandoned application may also be available to the public if the application is referenced in a published application or an issued patent (see 37 CFR 1.14). Checks and credit card authorization forms PTO-2038 submitted for payment purposes are not retained in the application file and therefore are not publicly available.

LEGAL NAME OF INVENTOR

Inventor: Syed Wajahat Ali Shah Kazmi Date (Optional): _____

Signature: *Wajahat Ali Kazmi* Wajahat Ali Kazmi (Oct 2, 2021 09:39 GMT+3)

Note: An application data sheet (PTO/SB/14 or equivalent), including naming the entire inventive entity, must accompany this form or **must have been previously filed**. Use an additional PTO/AIA/01 form for each additional inventor.

This collection of information is required by 35 U.S.C. 115 and 37 CFR 1.63. The information is required to obtain or retain a benefit by the public which is to file (and by the USPTO to process) an application. Confidentiality is governed by 35 U.S.C. 122 and 37 CFR 1.11 and 1.14. This collection is estimated to take 1 minute to complete, including gathering, preparing, and submitting the completed application form to the USPTO. Time will vary depending upon the individual case. Any comments on the amount of time you require to complete this form and/or suggestions for reducing this burden, should be sent to the Chief Information Officer, U.S. Patent and Trademark Office, U.S. Department of Commerce, P.O. Box 1450, Alexandria, VA 22313-1450. DO NOT SEND FEES OR COMPLETED FORMS TO THIS ADDRESS. **SEND TO: Commissioner for Patents, P.O. Box 1450, Alexandria, VA 22313-1450.**

If you need assistance in completing the form, call 1-800-PTO-9199 and select option 2.

UNITED STATES
PATENT AND TRADEMARK OFFICE

P.O. Box 1450
Alexandria, VA 22313 - 1450
www.uspto.gov

ELECTRONIC PAYMENT RECEIPT

APPLICATION #	RECEIPT DATE / TIME	ATTORNEY DOCKET #
18/527,226	12/01/2023 10:34:01 PM Z ET	189908.000302

Title of Invention

CAMERA INITIALIZATION FOR LANE DETECTION AND DISTANCE ESTIMATION USING SINGLE-VIEW GEOMETRY

Application Information

APPLICATION TYPE	Utility - Nonprovisional Application under 35 USC 111(a)	PATENT #	-
CONFIRMATION #	7088	FILED BY	Judi Cordo
PATENT CENTER #	63465722	AUTHORIZED BY	George Zalepa
CUSTOMER #	32361	FILING DATE	-
CORRESPONDENCE ADDRESS	-	FIRST NAMED INVENTOR	Ali HASSAN

Payment Information

PAYMENT METHOD	PAYMENT TRANSACTION ID	PAYMENT AUTHORIZED BY
DA / 501561	E2023B1M35389800	Judi Cordo

PRE-AUTHORIZED ACCOUNT	PRE-AUTHORIZED CATEGORY
501561	37 CFR 1.16 (National application filing, search, and examination fees); 37 CFR 1.17 (Patent application and reexamination processing fees); 37 CFR 1.19 (Document supply fees); 37 CFR 1.21 (Miscellaneous fees and charges)

FEE CODE	DESCRIPTION	ITEM PRICE($)	QUANTITY	ITEM TOTAL($)
1111	UTILITY PATENT APPL. SEARCH FEE	700.00	1	700.00
1011	BASIC FILING FEE - UTILITY (PAPER FILING ALSO REQUIRES NON-ELECTRONIC FILING FEE UNDER 1.16(T))	320.00	1	320.00
1311	PATENT APPL. EXAMINATION FEE	800.00	1	800.00
			TOTAL	$1,820.00

AMOUNT:

This Acknowledgement Receipt evidences receipt on the noted date by the USPTO of the indicated documents, characterized by the applicant, and including page counts, where applicable. It serves as evidence of receipt similar to a Post Card, as described in MPEP 503.

New Applications Under 35 U.S.C. 111

If a new application is being filed and the application includes the necessary components for filing date (see 37 CFR 1.53(b)-(d) and MPEP 506), a Filing Receipt (37 CFR 1.54) will be issued in due course and the date shown on this Acknowledgement Receipt will establish the filing date of the application.

National Stage of an International Application under 35 U.S.C. 371

If a timely submission to enter the national stage of an international application is compliant with the conditions of 35 U.S.C. 371 and other applicable requirements a Form PCT/DO/EO/903 indicating acceptance of the application as a national stage submission under 35 U.S.C. 371 will be issued in addition to the Filing Receipt, in due course.

New International Application Filed with the USPTO as a Receiving Office

If a new international application is being filed and the international application includes the necessary components for an international filing date (see PCT Article 11 and MPEP 1810), a Notification of the International Application Number and of the International Filing Date (Form PCT/RO/105) will be issued in due course, subject to prescriptions concerning national security, and the date shown on this Acknowledgement Receipt will establish the international filing date of the application.

PATENT APPLICATION FEE DETERMINATION RECORD

Substitute for Form PTO-875

Application or Docket Number: 18/527,226

APPLICATION AS FILED - PART I

FOR	(Column 1) NUMBER FILED	(Column 2) NUMBER EXTRA	SMALL ENTITY RATE($)	SMALL ENTITY FEE($)	OR	OTHER THAN SMALL ENTITY RATE($)	OTHER THAN SMALL ENTITY FEE($)
BASIC FEE (37 CFR 1.16(a), (b), or (c))	N/A	N/A	N/A			N/A	320
SEARCH FEE (37 CFR 1.16(k), (i), or (m))	N/A	N/A	N/A			N/A	700
EXAMINATION FEE (37 CFR 1.16(o), (p), or (q))	N/A	N/A	N/A			N/A	800
TOTAL CLAIMS (37 CFR 1.16(i))	20 minus 20 =	* 0			OR	x =	0
INDEPENDENT CLAIMS (37 CFR 1.16(h))	3 minus 3 =	*				x =	0
APPLICATION SIZE FEE (37 CFR 1.16(s))	If the specification and drawings exceed 100 sheets of paper, the application size fee due is $310 ($155 for small entity) for each additional 50 sheets or fraction thereof. See 35 U.S.C. 41(a)(1)(G) and 37 CFR 1.16(s).						0
MULTIPLE DEPENDENT CLAIM PRESENT (37 CFR 1.16(j))							0
* If the difference in column 1 is less than zero, enter "0" in column 2.			TOTAL			TOTAL	1820

APPLICATION AS AMENDED - PART II

		(Column 1) CLAIMS REMAINING AFTER AMENDMENT		(Column 2) HIGHEST NUMBER PREVIOUSLY PAID FOR	(Column 3) PRESENT EXTRA	SMALL ENTITY RATE($)	SMALL ENTITY ADDITIONAL FEE($)	OR	OTHER THAN SMALL ENTITY RATE($)	OTHER THAN SMALL ENTITY ADDITIONAL FEE($)
AMENDMENT A	Total (37 CFR 1.16(i))	*	Minus	**	=	x =		OR	x =	
	Independent (37 CFR 1.16(h))	*	Minus	***	=	x =		OR	x =	
	Application Size Fee (37 CFR 1.16(s))									
	FIRST PRESENTATION OF MULTIPLE DEPENDENT CLAIM (37 CFR 1.16(j))							OR		
						TOTAL ADD'L FEE		OR	TOTAL ADD'L FEE	

		(Column 1) CLAIMS REMAINING AFTER AMENDMENT		(Column 2) HIGHEST NUMBER PREVIOUSLY PAID FOR	(Column 3) PRESENT EXTRA	SMALL ENTITY RATE($)	SMALL ENTITY ADDITIONAL FEE($)	OR	OTHER THAN SMALL ENTITY RATE($)	OTHER THAN SMALL ENTITY ADDITIONAL FEE($)
AMENDMENT B	Total (37 CFR 1.16(i))	*	Minus	**	=	x =		OR	x =	
	Independent (37 CFR 1.16(h))	*	Minus	***	=	x =		OR	x =	
	Application Size Fee (37 CFR 1.16(s))									
	FIRST PRESENTATION OF MULTIPLE DEPENDENT CLAIM (37 CFR 1.16(j))							OR		
						TOTAL ADD'L FEE		OR	TOTAL ADD'L FEE	

* If the entry in column 1 is less than the entry in column 2, write "0" in column 3.

** If the "Highest Number Previously Paid For" IN THIS SPACE is less than 20, enter "20".

*** If the "Highest Number Previously Paid For" IN THIS SPACE is less than 3, enter "3".

The "Highest Number Previously Paid For" (Total or Independent) is the highest found in the appropriate box in column 1.

UNITED STATES PATENT AND TRADEMARK OFFICE

UNITED STATES DEPARTMENT OF COMMERCE
United States Patent and Trademark Office
Address: COMMISSIONER FOR PATENTS
P.O. Box 1450
Alexandria, Virginia 22313-1450
www.uspto.gov

APPLICATION NUMBER	FILING or 371(c) DATE	GRP ART UNIT	FIL FEE REC'D	ATTY.DOCKET.NO	TOT CLAIMS	IND CLAIMS
18/527,226	12/01/2023		1820	189908.000302	20	3

CONFIRMATION NO. 7088

FILING RECEIPT

32361
GREENBERG TRAURIG (NY)
One Vanderbilt Avenue
NEW YORK, NY 10017

OC000000065776738

Date Mailed: 12/14/2023

Receipt is acknowledged of this non-provisional utility patent application. The application will be taken up for examination in due course. Applicant will be notified as to the results of the examination. Any correspondence concerning the application must include the following identification information: the U.S. APPLICATION NUMBER, FILING DATE, NAME OF FIRST INVENTOR, and TITLE OF INVENTION. Fees transmitted by check or draft are subject to collection.

Please verify the accuracy of the data presented on this receipt. If an error is noted on this Filing Receipt, please submit a written request for a corrected Filing Receipt, including a properly marked-up ADS showing the changes with strike-through for deletions and underlining for additions. If you received a "Notice to File Missing Parts" or other Notice requiring a response for this application, please submit any request for correction to this Filing Receipt with your reply to the Notice. When the USPTO processes the reply to the Notice, the USPTO will generate another Filing Receipt incorporating the requested corrections provided that the request is grantable.

Inventor(s)

Ali HASSAN, Lahore, PAKISTAN;
Ahmed ALI, Lahore, PAKISTAN;
Syed Wajahat Ali Shah KAZMI, Lahore, PAKISTAN;

Applicant(s)

MOTIVE TECHNOLOGIES, INC., San Francisco, CA;

Power of Attorney: The patent practitioners associated with Customer Number 32361

Domestic Priority data as claimed by applicant

This application is a CON of 17/493,011 10/04/2021

Foreign Applications for which priority is claimed (You may be eligible to benefit from the Patent Prosecution Highway program at the USPTO. Please see http://www.uspto.gov for more information.) - None.
Foreign application information must be provided in an Application Data Sheet in order to constitute a claim to foreign priority. See 37 CFR 1.55 and 1.76.

Permission to Access Application via Priority Document Exchange: Yes

Permission to Access Search Results: Yes

Applicant may provide or rescind an authorization for access using Form PTO/SB/39 or Form PTO/SB/69 as appropriate.

If Required, Foreign Filing License Granted: 12/13/2023

The country code and number of your priority application, to be used for filing abroad under the Paris Convention, is **US 18/527,226**

Projected Publication Date: 03/21/2024

Non-Publication Request: No

Early Publication Request: No

Title

CAMERA INITIALIZATION FOR LANE DETECTION AND DISTANCE ESTIMATION USING SINGLE-VIEW GEOMETRY

Preliminary Class

Statement under 37 CFR 1.55 or 1.78 for AIA (First Inventor to File) Transition Applications: No

PROTECTING YOUR INVENTION OUTSIDE THE UNITED STATES

Since the rights granted by a U.S. patent extend only throughout the territory of the United States and have no effect in a foreign country, an inventor who wishes patent protection in another country must apply for a patent in a specific country or in regional patent offices. Applicants may wish to consider the filing of an international application under the Patent Cooperation Treaty (PCT). An international (PCT) application generally has the same effect as a regular national patent application in each PCT-member country. The PCT process **simplifies** the filing of patent applications on the same invention in member countries, but **does not result** in a grant of "an international patent" and does not eliminate the need of applicants to file additional documents and fees in countries where patent protection is desired.

Almost every country has its own patent law, and a person desiring a patent in a particular country must make an application for patent in that country in accordance with its particular laws. Since the laws of many countries differ in various respects from the patent law of the United States, applicants are advised to seek guidance from specific foreign countries to ensure that patent rights are not lost prematurely.

Applicants also are advised that in the case of inventions made in the United States, the Director of the USPTO must issue a license before applicants can apply for a patent in a foreign country. The filing of a U.S. patent application serves as a request for a foreign filing license. The application's filing receipt contains further information and guidance as to the status of applicant's license for foreign filing.

Applicants may wish to consult the USPTO booklet, "General Information Concerning Patents" (specifically, the section entitled "Treaties and Foreign Patents") for more information on timeframes and deadlines for filing foreign patent applications. The guide is available either by contacting the USPTO Contact Center at 800-786-9199, or it can be viewed on the USPTO website at http://www.uspto.gov/web/offices/pac/doc/general/index.html.

For information on preventing theft of your intellectual property (patents, trademarks and copyrights), you may wish to consult the U.S. Government website, http://www.stopfakes.gov. Part of a Department of Commerce initiative, this website includes self-help "toolkits" giving innovators guidance on how to protect intellectual property in specific countries such as China, Korea and Mexico. For questions regarding patent enforcement issues, applicants may call the U.S. Government hotline at 1-866-999-HALT (1-866-999-4258).

LICENSE FOR FOREIGN FILING UNDER

Title 35, United States Code, Section 184

Title 37, Code of Federal Regulations, 5.11 & 5.15

GRANTED

The applicant has been granted a license under 35 U.S.C. 184, if the phrase "IF REQUIRED, FOREIGN FILING LICENSE GRANTED" followed by a date appears on this form. Such licenses are issued in all applications where the conditions for issuance of a license have been met, regardless of whether or not a license may be required as set forth in 37 CFR 5.15. The scope and limitations of this license are set forth in 37 CFR 5.15(a) unless an earlier license has been issued under 37 CFR 5.15(b). The license is subject to revocation upon written notification. The date indicated is the effective date of the license, unless an earlier license of similar scope has been granted under 37 CFR 5.13 or 5.14.

This license is to be retained by the licensee and may be used at any time on or after the effective date thereof unless it is revoked. This license is automatically transferred to any related applications(s) filed under 37 CFR 1.53(d). This license is not retroactive.

The grant of a license does not in any way lessen the responsibility of a licensee for the security of the subject matter as imposed by any Government contract or the provisions of existing laws relating to espionage and the national security or the export of technical data. Licensees should apprise themselves of current regulations especially with respect to certain countries, of other agencies, particularly the Office of Defense Trade Controls, Department of State (with respect to Arms, Munitions and Implements of War (22 CFR 121-128)); the Bureau of Industry and Security, Department of Commerce (15 CFR parts 730-774); the Office of Foreign AssetsControl, Department of Treasury (31 CFR Parts 500+) and the Department of Energy.

NOT GRANTED

No license under 35 U.S.C. 184 has been granted at this time, if the phrase "IF REQUIRED, FOREIGN FILING LICENSE GRANTED" DOES NOT appear on this form. Applicant may still petition for a license under 37 CFR 5.12, if a license is desired before the expiration of 6 months from the filing date of the application. If 6 months has lapsed from the filing date of this application and the licensee has not received any indication of a secrecy order under 35 U.S.C. 181, the licensee may foreign file the application pursuant to 37 CFR 5.15(b).

SelectUSA

The United States represents the largest, most dynamic marketplace in the world and is an unparalleled location for business investment, innovation, and commercialization of new technologies. The U.S. offers tremendous resources and advantages for those who invest and manufacture goods here. Through SelectUSA, our nation works to promote and facilitate business investment. SelectUSA provides information assistance to the international investor community; serves as an ombudsman for existing and potential investors; advocates on behalf of U.S. cities, states, and regions competing for global investment; and counsels U.S. economic development organizations on investment attraction best practices. To learn more about why the United States is the best country in the world to develop technology, manufacture products, deliver services, and grow your business, visit http://www.SelectUSA.gov or call +1-202-482-6800.

United States Patent and Trademark Office

Under Secretary of Commerce for Intellectual Property and
Director of the United States Patent and Trademark Office

WELCOME TO THE UNITED STATES PATENT AND TRADEMARK OFFICE (USPTO)

*Congratulations on taking the first step to protect your invention. You can now advertise or mark any products covered by this application for your invention as **"Patent Pending"** for as long as this application is pending!*

We are here to help you on the rest of your journey.

New to the process? The Patent Basics page will take you from "What is a patent?" to assistance with the application process.

- **www.uspto.gov/PatentBasics**

Consider cost savings. You might qualify for small entity or micro entity status, which means a discount on most USPTO patent fees.

- **www.uspto.gov/EntityStatus**

Become a registered electronic filer (eFiler). You'll gain access to the full capabilities of Patent Center. As a registered eFiler, you can electronically view your submission, track the progress of your application, and respond to USPTO correspondence.

- **www.uspto.gov/NewPatentFilers**

Learn how to identify which of your creative ideas might be intellectual property assets and how to protect them by using the USPTO Intellectual Property (IP) Identifier.

- **ipidentifier.uspto.gov**

We also provide Pro Se Assistance, support specifically geared for **independent inventors without an attorney or agent.** Follow the link below, call us at 866-767-3848, or email **proseassistancecenter@uspto.gov**.

- **www.uspto.gov/ProSePatents**

Need help near you? We have regional offices across the country, as well as Patent and Trademark Resource Centers in libraries in nearly every state, with specialists standing by to help you at no cost.

- **www.uspto.gov/locations**
- **www.uspto.gov/ptrc**

Contact us:

- **General information:** USPTO Contact Center
  - **www.uspto.gov/help**
- **Patent Center:**
  Patent Electronic Business Center
  - **www.uspto.gov/EBC**
- **Pre or post-examination:** Application Assistance Unit
  - **www.uspto.gov/PatentAssistance**

Want to learn more?

- **Access our free services** all in one spot. Find all of our contact centers, nationwide services, events, education, and training.
  - **www.uspto.gov/FreeServices**
- **Connect with us** on Instagram, LinkedIn, Twitter, Facebook, and YouTube.
- **Hear about resources for startups, inventors, and entrepreneurs,** as well as our initiatives engaging women, the military community, and others. These programs offer helpful tips and tricks on identifying and managing your IP, finding options for funding, and expanding your network to support your business.
  - **www.uspto.gov/startups**
  - **www.uspto.gov/inventors**
  - **www.uspto.gov/initiatives**
- We hope you connect with us by subscribing to receive important notifications by email.
  - **www.uspto.gov/subscribe**

Kathi Vidal

Kathi Vidal
Under Secretary of Commerce for Intellectual Property and
Director of the United States Patent and Trademark Office

Derrick Brent
Deputy Under Secretary of Commerce for Intellectual Property and
Deputy Director of the United States Patent and Trademark Office

UNITED STATES PATENT AND TRADEMARK OFFICE

UNITED STATES DEPARTMENT OF COMMERCE
United States Patent and Trademark Office
Address: COMMISSIONER FOR PATENTS
P.O. Box 1450
Alexandria, Virginia 22313-1450
www.uspto.gov

APPLICATION NUMBER	FILING OR 371(C) DATE	FIRST NAMED APPLICANT	ATTY. DOCKET NO./TITLE
18/527,226	12/01/2023	Ali HASSAN	189908.000302

CONFIRMATION NO. 7088

32361
GREENBERG TRAURIG (NY)
One Vanderbilt Avenue
NEW YORK, NY 10017

PUBLICATION NOTICE

OC000000070028301

Date Mailed: 03/22/2024

Title:CAMERA INITIALIZATION FOR LANE DETECTION AND DISTANCE ESTIMATION USING SINGLE-VIEW GEOMETRY

Publication No.US-2024-0096114-A1
Publication Date:03/21/2024

NOTICE OF PUBLICATION OF APPLICATION

The above-identified application will be electronically published as a patent application publication pursuant to 37 CFR 1.211, et seq. The patent application publication number and publication date are set forth above.

The publication may be accessed through the USPTO's publically available Searchable Databases via the Internet at www.uspto.gov. The direct link to access the publication is currently http://www.uspto.gov/patft/.

The publication process established by the Office does not provide for mailing a copy of the publication to applicant. A copy of the publication may be obtained from the Office upon payment of the appropriate fee set forth in 37 CFR 1.19(a)(1). Orders for copies of patent application publications are handled by the USPTO's Public Records Division. The Public Records Division can be reached by telephone at (571) 272-3150 or (800) 972-6382, by facsimile at (571) 273-3250, by mail addressed to the United States Patent and Trademark Office, Public Records Division, Alexandria, VA 22313-1450 or via the Internet.

In addition, information on the status of the application, including the mailing date of Office actions and the dates of receipt of correspondence filed in the Office, may also be accessed via the Internet through the Patent Electronic Business Center at www.uspto.gov using the public side of the Patent Application Information and Retrieval (PAIR) system. The direct link to access this status information is currently https://portal.uspto.gov/pair/PublicPair. Prior to publication, such status information is confidential and may only be obtained by applicant using the private side of PAIR.

Further assistance in electronically accessing the publication, or about PAIR, is available by calling the Patent Electronic Business Center at 1-866-217-9197.

Office of Data Managment, Application Assistance Unit (571) 272-4000, or (571) 272-4200, or 1-888-786-0101

PTO/SB/06 (09-11)
Approved for use through 1/31/2014. OMB 0651-0032
U.S. Patent and Trademark Office; U.S. DEPARTMENT OF COMMERCE
Under the Paperwork Reduction Act of 1995, no persons are required to respond to a collection of information unless it displays a valid OMB control number.

PATENT APPLICATION FEE DETERMINATION RECORD Substitute for Form PTO-875	Application or Docket Number 18/527,226	Filing Date 12/01/2023	☐ To be Mailed

ENTITY: ☑ LARGE ☐ SMALL ☐ MICRO

APPLICATION AS FILED - PART I

FOR	(Column 1) NUMBER FILED	(Column 2) NUMBER EXTRA		RATE ($)	FEE ($)
☐ BASIC FEE (37 CFR 1.16(a), (b), or (c))	N/A	N/A		N/A	
☐ SEARCH FEE (37 CFR 1.16(k), (i), or (m))	N/A	N/A		N/A	
☐ EXAMINATION FEE (37 CFR 1.16(o), (p), or (q))	N/A	N/A		N/A	
TOTAL CLAIMS (37 CFR 1.16(i))	minus 20 =	*		x $100 =	
INDEPENDENT CLAIMS (37 CFR 1.16(h))	minus 3 =	*		x $480 =	
☐ APPLICATION SIZE FEE (37 CFR 1.16(s))	If the specification and drawings exceed 100 sheets of paper, the application size fee due is $310 ($155 for small entity) for each additional 50 sheets or fraction thereof. See 35 U.S.C. 41(a)(1)(G) and 37 CFR 1.16(s).				
☐ MULTIPLE DEPENDENT CLAIM PRESENT (37 CFR 1.16(j))					
* If the difference in column 1 is less than zero, enter "0" in column 2.				TOTAL	

APPLICATION AS AMENDED - PART II

		(Column 1)		(Column 2)	(Column 3)			
AMENDMENT	03/29/2024	CLAIMS REMAINING AFTER AMENDMENT		HIGHEST NUMBER PREVIOUSLY PAID FOR	PRESENT EXTRA		RATE ($)	ADDITIONAL FEE ($)
	Total (37 CFR 1.16(i))	* 20	Minus	** 20	= 0		x $100 =	0
	Independent (37 CFR 1.16(h))	* 3	Minus	*** 3	= 0		x $480 =	0
	☐ Application Size Fee (37 CFR 1.16(s))							
	☐ FIRST PRESENTATION OF MULTIPLE DEPENDENT CLAIM (37 CFR 1.16(j))							
							TOTAL ADD'L FEE	0

		(Column 1)		(Column 2)	(Column 3)			
AMENDMENT		CLAIMS REMAINING AFTER AMENDMENT		HIGHEST NUMBER PREVIOUSLY PAID FOR	PRESENT EXTRA		RATE ($)	ADDITIONAL FEE ($)
	Total (37 CFR 1.16(i))	*	Minus	**	=		x $0 =	
	Independent (37 CFR 1.16(h))	*	Minus	***	=		x $0 =	
	☐ Application Size Fee (37 CFR 1.16(s))							
	☐ FIRST PRESENTATION OF MULTIPLE DEPENDENT CLAIM (37 CFR 1.16(j))							
							TOTAL ADD'L FEE	

* If the entry in column 1 is less than the entry in column 2, write "0" in column 3.	LIE
** If the "Highest Number Previously Paid For" IN THIS SPACE is less than 20, enter "20".	/ZETA T ADAMS/
*** If the "Highest Number Previously Paid For" IN THIS SPACE is less than 3, enter "3".	
The "Highest Number Previously Paid For" (Total or Independent) is the highest number found in the appropriate box in column 1.	

This collection of information is required by 37 CFR 1.16. The information is required to obtain or retain a benefit by the public which is to file (and by the USPTO to process) an application. Confidentiality is governed by 35 U.S.C. 122 and 37 CFR 1.14. This collection is estimated to take 12 minutes to complete, including gathering, preparing, and submitting the completed application form to the USPTO. Time will vary depending upon the individual case. Any comments on the amount of time you require to complete this form and/or suggestions for reducing this burden, should be sent to the Chief Information Officer, U.S. Patent and Trademark Office, U.S. Department of Commerce, P.O. Box 1450, Alexandria, VA 22313-1450. DO NOT SEND FEES OR COMPLETED FORMS TO THIS ADDRESS. **SEND TO: Commissioner for Patents, P.O. Box 1450, Alexandria, VA 22313-1450.**

If you need assistance in completing the form, call 1-800-PTO-9199 and select option 2.

IN THE UNITED STATES PATENT AND TRADEMARK OFFICE

Inventor(s)	A. Hassan *et al.*	Examiner	To be assigned
Serial No.	18/527,226	Art Unit	To be assigned
Filed	Dec. 1, 2023	Confirmation	7088
Title	CAMERA INITIALIZATION FOR LANE DETECTION AND DISTANCE ESTIMATION USING SINGLE-VIEW GEOMETRY		

PRELIMINARY AMENDMENT

COMMISSIONER FOR PATENTS
P.O. BOX 1450
ALEXANDRIA, VA 22313-1450

Dear Sir:

Before examination, please amend the application as follows.

LISTING OF THE CLAIMS

The following listing of claims replaces all previous listings.

1–20. (Canceled)

21. (New) A method comprising:

receiving an image of a roadway recorded by a camera device installed within a vehicle;

detecting a horizon line in the image;

overlaying a line on the image to generate an overlaid image;

transmitting the overlaid image to a computing device over a network;

receiving a modification of the line from the computing device, the modification comprising a new line at a second position;

computing a camera parameter based on the new line; and

transmitting data representing the camera parameter to the camera device.

22. (New) The method of claim 21, wherein the camera parameter comprises one of camera height, viewing angle, and road plane normal.

23. (New) The method of claim 21, wherein receiving the image of the roadway comprises receiving an image of the roadway while the vehicle is moving.

24. (New) The method of claim 23, wherein receiving the image of the roadway while the vehicle is moving comprises detecting that the vehicle is traveling above a pre-defined speed or for a pre-defined duration.

25. (New) The method of claim 21, wherein transmitting the overlaid image to the computing device over the network comprises transmitting the overlaid image to a web-based application.

26. (New) The method of claim 21, wherein receiving the modification of the line from the computing device comprises receiving an identification of a new horizon line by a user of the computing device.

27. (New) The method of claim 21, wherein transmitting the data representing the camera parameter to the camera device further comprises recomputing the camera parameter based on the modification of the line.

28. (New) A non-transitory computer-readable storage medium for tangibly storing computer program that, when executed by a computer processor, perform operations of:

receiving an image of a roadway recorded by a camera device installed within a vehicle;

detecting a horizon line in the image;

overlaying a line on the image to generate an overlaid image;

transmitting the overlaid image to a computing device over a network;

receiving a modification of the line from the computing device, the modification comprising a new line at a second position;

computing a camera parameter based on the new line; and

transmitting data representing the camera parameter to the camera device.

29. (New) The non-transitory computer-readable storage medium of claim 28, wherein the camera parameter comprises one of camera height, viewing angle, and road plane normal.

30. (New) The non-transitory computer-readable storage medium of claim 28, wherein receiving the image of the roadway comprises receiving an image of the roadway while the vehicle is moving.

31. (New) The non-transitory computer-readable storage medium of claim 30, wherein receiving the image of the roadway while the vehicle is moving comprises detecting that the vehicle is traveling above a pre-defined speed or for a pre-defined duration.

32. (New) The non-transitory computer-readable storage medium of claim 28, wherein transmitting the overlaid image to the computing device over the network comprises transmitting the overlaid image to a web-based application.

33. (New) The non-transitory computer-readable storage medium of claim 28, wherein receiving the modification of the line from the computing device comprises receiving an identification of a new horizon line by a user of the computing device.

34. (New) The non-transitory computer-readable storage medium of claim 28, wherein transmitting the data representing the camera parameter to the camera device further comprises recomputing the camera parameter based on the modification of the line.

35. (New) A device comprising:

a processor; and

a storage medium for tangibly storing thereon program logic for execution by the processor, the program logic comprising logic for:

receiving an image of a roadway recorded by a camera device installed within a vehicle;

detecting a horizon line in the image;

overlaying a line on the image to generate an overlaid image;

transmitting the overlaid image to a computing device over a network;

receiving a modification of the line from the computing device, the modification comprising a new line at a second position;

computing a camera parameter based on the new line; and

transmitting data representing the camera parameter to the camera device.

36. (New) The device of claim 35, wherein receiving the image of the roadway comprises receiving an image of the roadway while the vehicle is moving.

37. (New) The device of claim 36, wherein receiving the image of the roadway while the vehicle is moving comprises detecting that the vehicle is traveling above a pre-defined speed or for a pre-defined duration.

38. (New) The device of claim 35, wherein transmitting the overlaid image to the computing device over the network comprises transmitting the overlaid image to a web-based application.

39. (New) The device of claim 35, wherein receiving the modification of the line from the computing device comprises receiving an identification of a new horizon line by a user of the computing device.

40. (New) The device of claim 35, wherein transmitting the data representing the camera parameter to the camera device further comprises recomputing the camera parameter based on the modification of the line.

REMARKS

Claims 21 through 40 are pending. Claims 1 through 20 are hereby canceled without prejudice or disclaimer of the subject matter. Claims 21 through 40 are newly added, no new matter has been added. Examination and passage to allowance are respectfully requested.

Should there be any matters which the Examiner believes could be resolved in a telephone interview, the Examiner is requested to telephone the Applicant's undersigned attorney. In this regard, Applicant's undersigned attorney may be reached by phone at (973) 443-3241. All correspondence should continue to be directed to the below-listed address.

The Commissioner is hereby authorized to charge any required fee in connection with the submission of this paper, any additional fees which may be required, now or in the future, or credit any overpayment to Account No. 50-1561. Please ensure that the Attorney Docket Number is referred when charging any payments or credits for this case.

Respectfully submitted,
/George Zalepa/
George Zalepa
Reg. No. 72,706

GREENBERG TRAURIG, LLP
CUSTOMER NUMBER 32361
Phone: (973) 443-3241

UNITED STATES
PATENT AND TRADEMARK OFFICE

P.O. Box 1450
Alexandria, VA 22313 - 1450
www.uspto.gov

ELECTRONIC ACKNOWLEDGEMENT RECEIPT

APPLICATION #	RECEIPT DATE / TIME	ATTORNEY DOCKET #
18/527,226	**03/29/2024 07:35:00 AM Z ET**	**189908.000302**

Title of Invention

CAMERA INITIALIZATION FOR LANE DETECTION AND DISTANCE ESTIMATION USING SINGLE-VIEW GEOMETRY

Application Information

APPLICATION TYPE	Utility - Nonprovisional Application under 35 USC 111(a)	PATENT #	-
CONFIRMATION #	7088	FILED BY	Judi Cordo
PATENT CENTER #	64889313	FILING DATE	12/01/2023
CUSTOMER #	32361	FIRST NAMED INVENTOR	Ali HASSAN
CORRESPONDENCE ADDRESS	-	AUTHORIZED BY	George Zalepa

Documents

TOTAL DOCUMENTS: 3

DOCUMENT		PAGES	DESCRIPTION	SIZE (KB)
189908_000302_prelim.pdf		7	-	95 KB
189908_000302_prelim-A.PE.pdf	(1-1)	1	Preliminary Amendment	55 KB
189908_000302_prelim-CLM.pdf	(2-6)	5	Claims	84 KB
189908_000302_prelim-REM.pdf	(7-7)	1	Applicant Arguments/Remarks Made in an Amendment	27 KB

Digest

DOCUMENT	MESSAGE DIGEST(SHA-512)

189908_000302_prelim.pdf	44B05E334A9BB2EA099AC719DA84D7DBC66EA1CA743C9513 1EFA1D467EC3A57171C42536B82AEB86F83E9D2B8F4A734B9 4CD50400F758A2F821EBED124327ADE
189908_000302_prelim-A.PE.pdf	1F3BEF2E26FEDF563C2A12A565EA3B74D458B1677E75686BA EF26D2EFD7E5D73D6CFFEA05A048AB6669594A0A7E33AD36 FC2A710F1CFE243DE59F23F3FC50595
189908_000302_prelim-CLM.pdf	EFD3A06CB37B4B51965CF9B6D66D0DEC3F104A99E7D03844 DF630719C16D7107AAA3AEE6F4048BC40E30FC8562E053E37 11BC7028C3ED7B94D882DC92E4839B4
189908_000302_prelim-REM.pdf	4227A82B88DDD48D796AF5F3B7AD69F95D348393C7B820F62 BE28209C0EBCBC1119AA770C79D6CA9F112CC9D1E53C5688 8E82451292553AFE77392F0D1A77A93

This Acknowledgement Receipt evidences receipt on the noted date by the USPTO of the indicated documents, characterized by the applicant, and including page counts, where applicable. It serves as evidence of receipt similar to a Post Card, as described in MPEP 503.

New Applications Under 35 U.S.C. 111

If a new application is being filed and the application includes the necessary components for filing date (see 37 CFR 1.53(b)-(d) and MPEP 506), a Filing Receipt (37 CFR 1.54) will be issued in due course and the date shown on this Acknowledgement Receipt will establish the filing date of the application

National Stage of an International Application under 35 U.S.C. 371

If a timely submission to enter the national stage of an international application is compliant with the conditions of 35 U.S.C. 371 and other applicable requirements a Form PCT/DO/EO/903 indicating acceptance of the application as a national stage submission under 35 U.S.C. 371 will be issued in addition to the Filing Receipt, in due course.

New International Application Filed with the USPTO as a Receiving Office

If a new international application is being filed and the international application includes the necessary components for an international filing date (see PCT Article 11 and MPEP 1810), a Notification of the International Application Number and of the International Filing Date (Form PCT/RO/105) will be issued in due course, subject to prescriptions concerning national security, and the date shown on this Acknowledgement Receipt will establish the international filing date of the application.

Notice of References Cited	Application/Control No. 18/527,226	Applicant(s)/Patent Under Reexamination HASSAN et al.	
	Examiner HOWARD D BROWN JR	Art Unit 2488	Page 1 of 1

U.S. PATENT DOCUMENTS

*		Document Number Country Code-Number-Kind Code	Date YYYY-MM-DD	Name	CPC Classification	US Classification
*	A	US-20190102674-A1	2019-04-04	KWANT; Richard	G06F16/215	1/1
*	B	US-11205284-B2	2021-12-21	Dai; Xing	G06T7/80	1/1
*	C	US-20220105947-A1	2022-04-07	POSTNIKOV; Mikhail Mikhailovich	G06V20/588	1/1
*	D	US-20190034740-A1	2019-01-31	KWANT; Richard	G06V10/462	1/1
*	E	US-20200357138-A1	2020-11-12	Xiang; Jie	H04N23/54	1/1
*	F	US-20180262678-A1	2018-09-13	HUNT; Shawn	H04N23/72	1/1
*	G	US-20150177370-A1	2015-06-25	TRUMMER; Michael	G01S7/51	356/5.01
	H					
	I					
	J					
	K					
	L					
	M					

FOREIGN PATENT DOCUMENTS

*		Document Number Country Code-Number-Kind Code	Date YYYY-MM-DD	Country	Name	CPC Classification
	N					
	O					
	P					
	Q					
	R					
	S					
	T					

NON-PATENT DOCUMENTS

*		Include as applicable: Author, Title Date, Publisher, Edition or Volume, Pertinent Pages)
	U	
	V	
	W	
	X	

*A copy of this reference is not being furnished with this Office action. (See MPEP § 707.05(a).)
Dates in YYYY-MM-DD format are publication dates. Classifications may be US or foreign.

Search Notes	Application/Control No.	Applicant(s)/Patent Under Reexamination
	18/527,226	HASSAN et al.
	Examiner	Art Unit
	HOWARD D BROWN JR	2488

CPC - Searched*		
Symbol	**Date**	**Examiner**
(G06V20/588	06/07/2024	HB
G06F18/214	06/07/2024	HB
G06N3/044	06/07/2024	HB
G06T7/50	06/07/2024	HB
G06T7/75	06/07/2024	HB
G06T2207/30256	06/07/2024	HB
G06N3/0442	06/07/2024	HB
G06N3/045	06/07/2024	HB
G06N3/0464	06/07/2024	HB
G06N3/084	06/07/2024	HB
G06N3/09	06/07/2024	HB
G06V10/82	06/07/2024	HB

CPC Combination Sets - Searched*		
Symbol	**Date**	**Examiner**

US Classification - Searched*			
Class	**Subclass**	**Date**	**Examiner**

* See search history printout included with this form or the SEARCH NOTES box below to determine the scope of the search.

/HOWARD D BROWN JR/ Examiner, Art Unit 2488	

Search Notes	Application/Control No.	Applicant(s)/Patent Under Reexamination
	18/527,226	HASSAN et al.
	Examiner	Art Unit
	HOWARD D BROWN JR	2488

Search Notes		
Search Notes	**Date**	**Examiner**
Search Strategy: US-PGPUB, USPAT, USOCR, JPO, EPO, DERWENT including keywords, class/subclass, inventor, assignee	06/07/2024	HB

Interference Search			
US Class/CPC Symbol	**US Subclass/CPC Group**	**Date**	**Examiner**

/HOWARD D BROWN JR/ Examiner, Art Unit 2488	

Index of Claims	Application/Control No.	Applicant(s)/Patent Under Reexamination
	18/527,226	HASSAN et al.
	Examiner	Art Unit
	HOWARD D BROWN JR	2488

✓	Rejected	-	Cancelled	N	Non-Elected	A	Appeal
=	Allowed	÷	Restricted	I	Interference	O	Objected

CLAIMS										
☐ Claims renumbered in the same order as presented by applicant						☐ CPA		☐ T.D.		☐ R.1.47
CLAIM		DATE								
Final	Original	06/07/2024								
	1	-								
	2	-								
	3	-								
	4	-								
	5	-								
	6	-								
	7	-								
	8	-								
	9	-								
	10	-								
	11	-								
	12	-								
	13	-								
	14	-								
	15	-								
	16	-								
	17	-								
	18	-								
	19	-								
	20	-								
	21	✓								
	22	✓								
	23	✓								
	24	✓								
	25	✓								
	26	✓								
	27	✓								
	28	✓								
	29	✓								
	30	✓								
	31	✓								
	32	✓								
	33	✓								
	34	✓								
	35	✓								
	36	✓								
	37	✓								
	38	✓								
	39	✓								
	40	✓								

Doc code: IDS
Doc description: Information Disclosure Statement (IDS) Filed

PTO/SB/08a (01-22)
Approved for use through 05/31/2024. OMB 0651-0031
U.S. Patent and Trademark Office; U.S. DEPARTMENT OF COMMERCE
Under the Paperwork Reduction Act of 1995, no persons are required to respond to a collection of information unless it contains a valid OMB control number.

INFORMATION DISCLOSURE STATEMENT BY APPLICANT

(Not for submission under 37 CFR 1.99)

Application Number	18527226
Filing Date	12/01/2023
First Named Inventor	HASSAN, Ali
Art Unit	2488
Examiner Name	Howard Brown
Attorney Docket Number	189908.000302

U.S.PATENTS Remove

Examiner Initial*	Cite No	Patent Number	Kind Code[1]	Issue Date	Name of Patentee or Applicant of cited Document	Pages,Columns,Lines where Relevant Passages or Relevant Figures Appear
	1	11205284	B2	2021-12-21	Dal et al.	

If you wish to add additional U.S. Patent citation information please click the Add button. Add

U.S.PATENT APPLICATION PUBLICATIONS Remove

Examiner Initial*	Cite No	Publication Number	Kind Code[1]	Publication Date	Name of Patentee or Applicant of cited Document	Pages,Columns,Lines where Relevant Passages or Relevant Figures Appear
	1	20210049780	A1	2021-02-18	Westmacot et al.	
	2	20210009166	A1	2021-01-14	Li et al.	
	3	20190009166	A1	2019-07-25	Brauch, Adam	
	4	20190102674	A1	2019-04-04	Kwant et al.	
	5	20220105947	A1	2022-04-07	Postnikov et al.	

ALL REFERENCES CONSIDERED EXCEPT WHERE LINED THROUGH. /H.D.B/

INFORMATION DISCLOSURE STATEMENT BY APPLICANT (Not for submission under 37 CFR 1.99)		
	Application Number	
	Filing Date	
	First Named Inventor	HASSAN, Ali
	Art Unit	
	Examiner Name	
	Attorney Docket Number	189908.000302

	6	20190034740	A1	2019-01-31	Kwant et al.	
	7	20200357138	A1	2020-11-12	Xiang et al.	
	8	20180262678	A1	2018-09-13	Hunt et al.	
	9	20150177370	A1	2015-06-25	Trummer et al.	
	10	20180046867	A1	2018-02-15	Yang, Lei	
	11	20170177951	A1	2017-06-22	Yang et al.	
	12	20230106961	A1	2023-04-06	Hassan et al.	
	13	20190205667	A1	2019-07-04	Avidan et al.	

If you wish to add additional U.S. Published Application citation information please click the Add button. Add

FOREIGN PATENT DOCUMENTS Remove

Examiner Initial*	Cite No	Foreign Document Number[3]	Country Code[2] i	Kind Code[4]	Publication Date	Name of Patentee or Applicant of cited Document	Pages,Columns,Lines where Relevant Passages or Relevant Figures Appear	T[5]
	1							☐

If you wish to add additional Foreign Patent Document citation information please click the Add button Add

ALL REFERENCES CONSIDERED EXCEPT WHERE LINED THROUGH. /H.D.B/

INFORMATION DISCLOSURE STATEMENT BY APPLICANT (Not for submission under 37 CFR 1.99)		
	Application Number	
	Filing Date	
	First Named Inventor	HASSAN, Ali
	Art Unit	
	Examiner Name	
	Attorney Docket Number	189908.000302

NON-PATENT LITERATURE DOCUMENTS			Remove
Examiner Initials*	Cite No	Include name of the author (in CAPITAL LETTERS), title of the article (when appropriate), title of the item (book, magazine, journal, serial, symposium, catalog, etc), date, pages(s), volume-issue number(s), publisher, city and/or country where published.	T[5]
	1	International Search Report and Written Opinion to corresponding International Application No. PCT/US22/45131 mailed January 31, 2023 (9 pages).	☐

If you wish to add additional non-patent literature document citation information please click the Add button Add

EXAMINER SIGNATURE			
Examiner Signature	/HOWARD D BROWN JR/	Date Considered	06/06/2024

*EXAMINER: Initial if reference considered, whether or not citation is in conformance with MPEP 609. Draw line through a citation if not in conformance and not considered. Include copy of this form with next communication to applicant.

[1] See Kind Codes of USPTO Patent Documents at www.USPTO.GOV or MPEP 901.04. [2] Enter office that issued the document, by the two-letter code (WIPO Standard ST.3). [3] For Japanese patent documents, the indication of the year of the reign of the Emperor must precede the serial number of the patent document. [4] Kind of document by the appropriate symbols as indicated on the document under WIPO Standard ST.16 if possible. [5] Applicant is to place a check mark here if English language translation is attached.

ALL REFERENCES CONSIDERED EXCEPT WHERE LINED THROUGH. /H.D.B/

INFORMATION DISCLOSURE STATEMENT BY APPLICANT (Not for submission under 37 CFR 1.99)		
	Application Number	
	Filing Date	
	First Named Inventor	HASSAN, Ali
	Art Unit	
	Examiner Name	
	Attorney Docket Number	189908.000302

CERTIFICATION STATEMENT

Please see 37 CFR 1.97 and 1.98 to make the appropriate selection(s):

☐ That each item of information contained in the information disclosure statement was first cited in any communication from a foreign patent office in a counterpart foreign application not more than three months prior to the filing of the information disclosure statement. See 37 CFR 1.97(e)(1).

OR

☐ That no item of information contained in the information disclosure statement was cited in a communication from a foreign patent office in a counterpart foreign application, and, to the knowledge of the person signing the certification after making reasonable inquiry, no item of information contained in the information disclosure statement was known to any individual designated in 37 CFR 1.56(c) more than three months prior to the filing of the information disclosure statement. See 37 CFR 1.97(e)(2).

☐ See attached certification statement.

☐ The fee set forth in 37 CFR 1.17 (p) has been submitted herewith.

☒ A certification statement is not submitted herewith.

SIGNATURE

A signature of the applicant or representative is required in accordance with CFR 1.33, 10.18. Please see CFR 1.4(d) for the form of the signature.

Signature	/George Zalepa/	Date (YYYY-MM-DD)	2023-12-01
Name/Print	George Zalepa	Registration Number	72706

This collection of information is required by 37 CFR 1.97 and 1.98. The information is required to obtain or retain a benefit by the public which is to file (and by the USPTO to process) an application. Confidentiality is governed by 35 U.S.C. 122 and 37 CFR 1.14. This collection is estimated to take 1 hour to complete, including gathering, preparing and submitting the completed application form to the USPTO. Time will vary depending upon the individual case. Any comments on the amount of time you require to complete this form and/or suggestions for reducing this burden, should be sent to the Chief Information Officer, U.S. Patent and Trademark Office, U.S. Department of Commerce, P.O. Box 1450, Alexandria, VA 22313-1450. DO NOT SEND FEES OR COMPLETED FORMS TO THIS ADDRESS. **SEND TO: Commissioner for Patents, P.O. Box 1450, Alexandria, VA 22313-1450.**

ALL REFERENCES CONSIDERED EXCEPT WHERE LINED THROUGH. /H.D.B/

Privacy Act Statement

The Privacy Act of 1974 (P.L. 93-579) requires that you be given certain information in connection with your submission of the attached form related to a patent application or patent. Accordingly, pursuant to the requirements of the Act, please be advised that: (1) the general authority for the collection of this information is 35 U.S.C. 2(b)(2); (2) furnishing of the information solicited is voluntary; and (3) the principal purpose for which the information is used by the U.S. Patent and Trademark Office is to process and/or examine your submission related to a patent application or patent. If you do not furnish the requested information, the U.S. Patent and Trademark Office may not be able to process and/or examine your submission, which may result in termination of proceedings or abandonment of the application or expiration of the patent.

The information provided by you in this form will be subject to the following routine uses:

1. The information on this form will be treated confidentially to the extent allowed under the Freedom of Information Act (5 U.S.C. 552) and the Privacy Act (5 U.S.C. 552a). Records from this system of records may be disclosed to the Department of Justice to determine whether the Freedom of Information Act requires disclosure of these record s.

2. A record from this system of records may be disclosed, as a routine use, in the course of presenting evidence to a court, magistrate, or administrative tribunal, including disclosures to opposing counsel in the course of settlement negotiations.

3. A record in this system of records may be disclosed, as a routine use, to a Member of Congress submitting a request involving an individual, to whom the record pertains, when the individual has requested assistance from the Member with respect to the subject matter of the record.

4. A record in this system of records may be disclosed, as a routine use, to a contractor of the Agency having need for the information in order to perform a contract. Recipients of information shall be required to comply with the requirements of the Privacy Act of 1974, as amended, pursuant to 5 U.S.C. 552a(m).

5. A record related to an International Application filed under the Patent Cooperation Treaty in this system of records may be disclosed, as a routine use, to the International Bureau of the World Intellectual Property Organization, pursuant to the Patent Cooperation Treaty.

6. A record in this system of records may be disclosed, as a routine use, to another federal agency for purposes of National Security review (35 U.S.C. 181) and for review pursuant to the Atomic Energy Act (42 U.S.C. 218(c)).

7. A record from this system of records may be disclosed, as a routine use, to the Administrator, General Services, or his/her designee, during an inspection of records conducted by GSA as part of that agency's responsibility to recommend improvements in records management practices and programs, under authority of 44 U.S.C. 2904 and 2906. Such disclosure shall be made in accordance with the GSA regulations governing inspection of records for this purpose, and any other relevant (i.e., GSA or Commerce) directive. Such disclosure shall not be used to make determinations about individuals.

8. A record from this system of records may be disclosed, as a routine use, to the public after either publication of the application pursuant to 35 U.S.C. 122(b) or issuance of a patent pursuant to 35 U.S.C. 151. Further, a record may be disclosed, subject to the limitations of 37 CFR 1.14, as a routine use, to the public if the record was filed in an application which became abandoned or in which the proceedings were terminated and which application is referenced by either a published application, an application open to public inspections or an issued patent.

9. A record from this system of records may be disclosed, as a routine use, to a Federal, State, or local law enforcement agency, if the USPTO becomes aware of a violation or potential violation of law or regulation.

ALL REFERENCES CONSIDERED EXCEPT WHERE LINED THROUGH. /H.D.B/

Bibliographic Data

Application No: 18/527,226

Foreign Priority claimed: ○ Yes ◉ No

35 USC 119 (a-d) conditions met: ☐ Yes ☑ No ☐ Met After Allowance

Verified and Acknowledged: /HOWARD D BROWN JR/ (Examiner's Signature) | (Initials)

Title: CAMERA INITIALIZATION FOR LANE DETECTION AND DISTANCE ESTIMATION USING SINGLE-VIEW GEOMETRY

FILING or 371(c) DATE	CLASS	GROUP ART UNIT	ATTORNEY DOCKET NO.
12/01/2023	348	2488	189908.000302
RULE			

APPLICANTS

MOTIVE TECHNOLOGIES, INC., San Francisco, CA, UNITED STATES

INVENTORS

Ali HASSAN, Lahore, PAKISTAN

Ahmed ALI, Lahore, PAKISTAN

Syed Wajahat Ali Shah KAZMI, Lahore, PAKISTAN

CONTINUING DATA

This application is a CON of 17493011 10/04/2021 PAT 11875580

FOREIGN APPLICATIONS

IF REQUIRED, FOREIGN LICENSE GRANTED**

12/13/2023

STATE OR COUNTRY

PAKISTAN

ADDRESS

GREENBERG TRAURIG (NY)
One Vanderbilt Avenue
NEW YORK, NY 10017
UNITED STATES

FILING FEE RECEIVED

$1,820

PE2E SEARCH - Search History (Prior Art)

Ref #	Hits	Search Query	DBs	Default Operator	Plurals	British Equivalents	Time Stamp
L1	1	"17493011"	(US-PGPUB; USPAT; USOCR; FIT (CN, FR, WO); FPRS; EPO; JPO; DERWENT; IBM_TDB)	OR	ON	ON	2023/09/06 07:04 AM
L2	40	((("MOTIVE") near3 ("TECHNOLOGIES") near3 ("INC"))).AS,AANM.	(USPAT)	OR	ON	ON	2023/09/06 07:44 AM
L3	1065	((("HASSAN") near3 ("Ali")) OR (("ALI") near3 ("Ahmed")) OR (("KAZMI") near3 ("Syed") near3 ("Wajahat") near3 ("Ali"))).INV.	(US-PGPUB; USPAT; USOCR; EPO; JPO; DERWENT)	OR	ON	ON	2023/09/06 07:44 AM
L4	3	("20190009166" OR "20210009166" OR "20210049780").pn.	(US-PGPUB; USPAT)	OR	ON	ON	2023/09/06 07:46 AM
L5	88562	(G06V20/588 OR G06F18/214 OR G06N3/044 OR G06T7/50 OR G06T7/75 OR G06T2207/30256 OR G06N3/0442 OR G06N3/045 OR G06N3/0464 OR G06N3/084 OR G06N3/09 OR G06V10/82).cpc.	(US-PGPUB; USPAT)	OR	ON	ON	2023/09/06 07:47 AM
L6	587992	(G06V20/588 OR G06F18/214 OR G06N3/044 OR G06T7/50 OR G06T7/75 OR G06T2207/30256 OR G06N3/0442 OR G06N3/045 OR G06N3/0464 OR G06N3/084 OR G06N3/09 OR G06V10/82).cpc.	(US-PGPUB; USPAT; USOCR; FIT (CN, FR, WO); FPRS; EPO; JPO; DERWENT; IBM_TDB)	OR	ON	ON	2023/09/06 07:48 AM
L7	540505	(Road OR street WITH lane WITH line WITH bondar$3) SAME (detect$3)	(US-PGPUB; USPAT; USOCR; FIT (CN, FR, WO); FPRS; EPO; JPO; DERWENT; IBM_TDB)	OR	ON	ON	2023/09/06 07:57 AM
L8	1856	(Road OR street WITH lane WITH line WITH	(US-PGPUB; USPAT; USOCR; FIT (CN, FR,	OR	ON	ON	2023/09/06 07:59 AM

		bondar$3) SAME (detect$3) AND (horizon WITH line)	WO); FPRS; EPO; JPO; DERWENT; IBM_TDB)				
L9	466	(Road OR street WITH lane WITH line WITH bondar$3) SAME (detect$3) SAME (horizon WITH line)	(US-PGPUB; USPAT; USOCR; FIT (CN, FR, WO); FPRS; EPO; JPO; DERWENT; IBM_TDB)	OR	ON	ON	2023/09/06 08:00 AM
L10	169	5 AND (Road OR street WITH lane WITH line WITH bondar$3) SAME (detect$3) SAME (horizon WITH line)	(US-PGPUB; USPAT; USOCR; FIT (CN, FR, WO); FPRS; EPO; JPO; DERWENT; IBM_TDB)	OR	ON	ON	2023/09/06 08:01 AM
L11	443	5 AND (Road OR street WITH lane WITH line) SAME (horizon WITH line)	(US-PGPUB; USPAT; USOCR; FIT (CN, FR, WO); FPRS; EPO; JPO; DERWENT; IBM_TDB)	OR	ON	ON	2023/09/06 08:03 AM
L12	1693	(Road OR street WITH lane WITH line) SAME (horizon WITH line)	(US-PGPUB; USPAT; USOCR; FIT (CN, FR, WO); FPRS; EPO; JPO; DERWENT; IBM_TDB)	OR	ON	ON	2023/09/06 08:03 AM
L13	30	12 AND (Lane WITH mark$3) WITH (Horizon ADJ line)	(US-PGPUB; USPAT; USOCR; FIT (CN, FR, WO); FPRS; EPO; JPO; DERWENT; IBM_TDB)	OR	ON	ON	2023/09/06 08:04 AM
L14	2	12 AND (Lane WITH mark$3) WITH (Horizon ADJ line) SAME (predict$3 OR forecast$3)	(US-PGPUB; USPAT; USOCR; FIT (CN, FR, WO); FPRS; EPO; JPO; DERWENT; IBM_TDB)	OR	ON	ON	2023/09/06 01:56 PM
L15	2	(Lane ADJ line) WITH (mark$3) WITH (Horizon ADJ line) SAME (predict$3)	(US-PGPUB; USPAT; USOCR; FIT (CN, FR, WO); FPRS; EPO; JPO; DERWENT; IBM_TDB)	OR	ON	ON	2023/09/06 02:03 PM
L16	4	(Lane ADJ line) SAME (Horizon ADJ line) SAME (predict$3)	(US-PGPUB; USPAT; USOCR; FIT (CN, FR, WO); FPRS; EPO; JPO; DERWENT; IBM_TDB)	OR	ON	ON	2023/09/06 02:04 PM
L17	57	(Road OR street WITH lane WITH line WITH bondar$3) SAME (detect$3) AND (horizon WITH line) SAME network	(US-PGPUB; USPAT; USOCR; FIT (CN, FR, WO); FPRS; EPO; JPO; DERWENT; IBM_TDB)	OR	ON	ON	2023/09/11 12:31 PM
L18	28	(Road OR street WITH lane WITH line WITH bondar$3) SAME (detect$3) AND (horizon WITH line)	(US-PGPUB; USPAT)	OR	ON	ON	2023/09/11 12:37 PM

		SAME network					
L19	28	(Road OR street WITH lane WITH line WITH bondar$3) SAME (detect$3) AND (horizon WITH line) SAME (network)	(US-PGPUB; USPAT)	OR	ON	ON	2023/09/11 12:44 PM
L20	6	(Road OR street WITH lane WITH line WITH bondar$3) SAME (detect$3) AND (horizon WITH line) SAME (network WITH receiv$3)	(US-PGPUB; USPAT)	OR	ON	ON	2023/09/11 12:56 PM
L21	869	(Road OR street WITH lane WITH line WITH bondar$3) SAME (detect$3) AND (horizon WITH line) SAME (network WITH receiv$3 WITH ccd OR camera OR imag$3)	(US-PGPUB; USPAT)	OR	ON	ON	2023/09/12 10:40 AM
L22	869	(Road OR street WITH lane WITH line WITH bondar$3) SAME (detect$3) AND (horizon WITH line) SAME (network near2 receiv$3 WITH ccd OR camera OR imag$3)	(US-PGPUB; USPAT)	OR	ON	ON	2023/09/12 10:41 AM
L23	452	(Road OR street WITH lane WITH line WITH bondar$3) SAME (detect$3) AND (horizon WITH line) SAME (network near2 receiv$3 WITH ccd OR camera)	(US-PGPUB; USPAT)	OR	ON	ON	2023/09/12 10:41 AM
L24	1	(Road OR street WITH lane WITH line WITH bondar$3) SAME (detect$3) AND (horizon WITH line) SAME (network near2 receiv$3 WITH camera)	(US-PGPUB; USPAT)	OR	ON	ON	2023/09/12 10:41 AM
L25	1	(Road OR street WITH lane WITH line WITH bondar$3) SAME (detect$3) AND (horizon WITH line) SAME (network WITH receiv$3 WITH camera)	(US-PGPUB; USPAT)	OR	ON	ON	2023/09/12 10:42 AM
L26	2596	5 AND (network WITH receiv$3 WITH camera)	(US-PGPUB; USPAT)	OR	ON	ON	2023/09/12 12:04 PM
L27	0	(Road OR street WITH	(US-PGPUB; USPAT)	OR	ON	ON	2023/09/12

		lane WITH line WITH bondar$3) SAME (horizon WITH line) SAME (network WITH receiv$3 WITH camera)					12:05 PM
L28	0	(Road OR street WITH lane ADJ line) SAME (horizon WITH line) SAME (boundary) SAME (network WITH receiv$3 WITH camera)	(US-PGPUB; USPAT)	OR	ON	ON	2023/09/12 12:13 PM
L29	0	(Road OR street WITH lane ADJ line) SAME (horizon WITH line) SAME (network WITH receiv$3 WITH camera)	(US-PGPUB; USPAT)	OR	ON	ON	2023/09/12 12:13 PM
L30	850	(Road OR street WITH lane ADJ line) SAME (network WITH receiv$3 WITH camera)	(US-PGPUB; USPAT)	OR	ON	ON	2023/09/12 12:13 PM
L31	477	(Road OR street WITH lane ADJ line) SAME (network WITH receiv$3 WITH camera WITH imag$3)	(US-PGPUB; USPAT)	OR	ON	ON	2023/09/12 12:13 PM
L32	133	5 AND (Road OR street WITH lane ADJ line) SAME (network WITH receiv$3 WITH camera WITH imag$3)	(US-PGPUB; USPAT)	OR	ON	ON	2023/09/12 12:14 PM
L33	0	5 AND (Road OR street WITH lane ADJ line) SAME (network WITH receiv$3 WITH camera WITH imag$3) AND (horizion ADJ Line)	(US-PGPUB; USPAT)	OR	ON	ON	2023/09/12 12:14 PM
L34	9	5 AND (Road OR street WITH lane ADJ line) SAME (network WITH receiv$3 WITH camera WITH imag$3) AND (horizon ADJ Line)	(US-PGPUB; USPAT)	OR	ON	ON	2023/09/12 12:15 PM
L35	0	5 AND (Road OR street WITH lane ADJ line) SAME (network WITH receiv$3 WITH camera WITH imag$3) SAME (horizon ADJ Line)	(US-PGPUB; USPAT)	OR	ON	ON	2023/09/12 12:15 PM
L36	0	(Road OR street WITH lane ADJ line) SAME (network WITH receiv$3 WITH camera WITH imag$3) SAME (horizon ADJ Line)	(US-PGPUB; USPAT)	OR	ON	ON	2023/09/12 12:15 PM

L37	0	31 AND annotat	(US-PGPUB; USPAT)	OR	ON	ON	2023/09/12 03:20 PM
L38	22	31 AND (annotat$3 WITH accuracy)	(US-PGPUB; USPAT)	OR	ON	ON	2023/09/12 03:20 PM
L39	18	32 AND (annotat$3 WITH accuracy)	(US-PGPUB; USPAT)	OR	ON	ON	2023/09/12 03:21 PM
L40	0	32 AND (annotat$3 WITH accuracy WITH lines)	(US-PGPUB; USPAT)	OR	ON	ON	2023/09/12 03:24 PM
L41	0	32 AND (annotat$3 WITH accuracy WITH line)	(US-PGPUB; USPAT)	OR	ON	ON	2023/09/12 03:24 PM
L42	0	32 AND (annotat$3 WITH accuracy WITH land)	(US-PGPUB; USPAT)	OR	ON	ON	2023/09/12 03:24 PM
L43	0	32 AND (annotat$3 WITH accuracy WITH lane)	(US-PGPUB; USPAT)	OR	ON	ON	2023/09/12 03:24 PM
L44	18	32 AND (annotat$3 WITH accuracy)	(US-PGPUB; USPAT)	OR	ON	ON	2023/09/12 03:24 PM
L45	0	(predict$3 WITH horizion ADJ line)	(US-PGPUB; USPAT; USOCR; FIT (CN, FR, WO); FPRS; EPO; JPO; DERWENT; IBM_TDB)	OR	ON	ON	2023/11/18 09:31 AM
L46	53	(predict$3 WITH horizon ADJ line)	(US-PGPUB; USPAT; USOCR; FIT (CN, FR, WO); FPRS; EPO; JPO; DERWENT; IBM_TDB)	OR	ON	ON	2023/11/18 09:31 AM
L47	18	(predict$3) SAME (detect$3 WITH horizon ADJ line)	(US-PGPUB; USPAT; USOCR; FIT (CN, FR, WO); FPRS; EPO; JPO; DERWENT; IBM_TDB)	OR	ON	ON	2023/11/18 09:32 AM
L48	346	(detect$3 WITH horizon ADJ line) WITH (imag$3)	(US-PGPUB; USPAT; USOCR; FIT (CN, FR, WO); FPRS; EPO; JPO; DERWENT; IBM_TDB)	OR	ON	ON	2023/11/18 09:42 AM
L49	3220	(camera WITH parameter) SAME (Line near2 detect$3)	(US-PGPUB; USPAT; USOCR; FIT (CN, FR, WO); FPRS; EPO; JPO; DERWENT; IBM_TDB)	OR	ON	ON	2023/11/18 09:44 AM
L50	2061	(camera WITH parameter) WITH (Line near2 detect$3)	(US-PGPUB; USPAT; USOCR; FIT (CN, FR, WO); FPRS; EPO; JPO; DERWENT; IBM_TDB)	OR	ON	ON	2023/11/18 09:44 AM
L51	36426	(camera ccd WITH parameter) WITH (Line near2 detect$3)	(US-PGPUB; USPAT; USOCR; FIT (CN, FR, WO); FPRS; EPO;	OR	ON	ON	2023/11/18 09:45 AM

			JPO; DERWENT; IBM_TDB)				
L52	36326	(camera ccd near2 parameter) WITH (Line near2 detect$3)	(US-PGPUB; USPAT; USOCR; FIT (CN, FR, WO); FPRS; EPO; JPO; DERWENT; IBM_TDB)	OR	ON	ON	2023/11/18 09:45 AM
L53	46	(camera ccd near2 parameter) WITH (Line near2 detect$3) AND 48	(US-PGPUB; USPAT; USOCR; FIT (CN, FR, WO); FPRS; EPO; JPO; DERWENT; IBM_TDB)	OR	ON	ON	2023/11/18 09:45 AM
L54	53	(predict$3) WITH (horizon ADJ line)	(US-PGPUB; USPAT; USOCR; FIT (CN, FR, WO); FPRS; EPO; JPO; DERWENT; IBM_TDB)	OR	ON	ON	2023/11/18 02:40 PM
L55	36326	(camera ccd near2 parameter) WITH (Line near2 detect$3)	(US-PGPUB; USPAT; USOCR; FIT (CN, FR, WO); FPRS; EPO; JPO; DERWENT; IBM_TDB)	OR	ON	ON	2023/11/18 02:40 PM
L56	3	55 AND 54	(US-PGPUB; USPAT; USOCR; FIT (CN, FR, WO); FPRS; EPO; JPO; DERWENT; IBM_TDB)	OR	ON	ON	2023/11/18 02:41 PM
L57	50974	(camera ccd near2 parameter) SAME (Line near2 detect$3)	(US-PGPUB; USPAT; USOCR; FIT (CN, FR, WO); FPRS; EPO; JPO; DERWENT; IBM_TDB)	OR	ON	ON	2023/11/18 02:41 PM
L58	16	(predict$3) WITH (horizon ADJ line)	(US-PGPUB; USPAT; IBM_TDB)	OR	ON	ON	2023/11/18 02:44 PM
L59	43	(horizon ADJ line) SAME (lane ADJ line)	(US-PGPUB; USPAT; IBM_TDB)	OR	ON	ON	2023/11/18 06:28 PM
L60	59	(horizon ADJ line) SAME (lane ADJ line)	(US-PGPUB; USPAT; USOCR; FIT (CN, FR, WO); FPRS; EPO; JPO; DERWENT; IBM_TDB)	OR	ON	ON	2023/11/18 06:28 PM
L61	53	(horizon ADJ line) SAME (lane ADJ line) SAME (markers OR points)	(US-PGPUB; USPAT; USOCR; FIT (CN, FR, WO); FPRS; EPO; JPO; DERWENT; IBM_TDB)	OR	ON	ON	2023/11/18 06:31 PM
L62	14	("11205284" OR "20150177370" OR "20170177951" OR "20180046867" OR "20180262678" OR "20190009166" OR "20190034740" OR "20190102674" OR	(US-PGPUB; USPAT)	OR	ON	ON	2024/06/06 07:31 PM

		"20190205667" OR "20200357138" OR "20210009166" OR "20210049780" OR "20220105947" OR "20230106961").pn.					
L63	9	"11875580"	(US-PGPUB; USPAT; USOCR; FIT (CN, FR, WO); FPRS; EPO; JPO; DERWENT; IBM_TDB)	OR	ON	ON	2024/06/06 07:34 PM
L64	1	"18527226"	(US-PGPUB; USPAT; USOCR; FIT (CN, FR, WO); FPRS; EPO; JPO; DERWENT; IBM_TDB)	OR	ON	ON	2024/06/06 08:08 PM

PE2E SEARCH - Search History (Interference)

Ref #	Hits	Search Query	DBs	Default Operator	Plurals	British Equivalents	Time Stamp
N1	42	(horizon ADJ line) SAME (lane ADJ line) SAME (markers OR points)	(US-PGPUB; USPAT)	OR	ON	ON	2023/11/18 06:36 PM
N2	211	(camera WITH parameter) WITH (Line near2 detect$3)	(US-PGPUB; USPAT)	OR	ON	ON	2023/11/18 06:36 PM
N3	1	N2 AND N1	(US-PGPUB; USPAT)	OR	ON	ON	2023/11/18 06:39 PM

UNITED STATES PATENT AND TRADEMARK OFFICE

UNITED STATES DEPARTMENT OF COMMERCE
United States Patent and Trademark Office
Address: COMMISSIONER FOR PATENTS
P.O. Box 1450
Alexandria, Virginia 22313-1450
www.uspto.gov

APPLICATION NO.	FILING DATE	FIRST NAMED INVENTOR	ATTORNEY DOCKET NO.	CONFIRMATION NO.
18/527,226	12/01/2023	Ali HASSAN	189908.000302	7088

32361 7590 06/12/2024
GREENBERG TRAURIG (NY)
One Vanderbilt Avenue
NEW YORK, NY 10017

EXAMINER
BROWN JR, HOWARD D

ART UNIT	PAPER NUMBER
2488	

NOTIFICATION DATE	DELIVERY MODE
06/12/2024	ELECTRONIC

Please find below and/or attached an Office communication concerning this application or proceeding.

The time period for reply, if any, is set in the attached communication.

Notice of the Office communication was sent electronically on above-indicated "Notification Date" to the following e-mail address(es):

cordesp@gtlaw.com
mendozae@gtlaw.com
njdocket@gtlaw.com

Office Action Summary	Application No. 18/527,226	Applicant(s) HASSAN et al.	
	Examiner HOWARD D BROWN JR	Art Unit 2488	AIA (FITF) Status Yes

-- The MAILING DATE of this communication appears on the cover sheet with the correspondence address --

Period for Reply

A SHORTENED STATUTORY PERIOD FOR REPLY IS SET TO EXPIRE 3 MONTHS FROM THE MAILING DATE OF THIS COMMUNICATION.

- Extensions of time may be available under the provisions of 37 CFR 1.136(a). In no event, however, may a reply be timely filed after SIX (6) MONTHS from the mailing date of this communication.
- If NO period for reply is specified above, the maximum statutory period will apply and will expire SIX (6) MONTHS from the mailing date of this communication.
- Failure to reply within the set or extended period for reply will, by statute, cause the application to become ABANDONED (35 U.S.C. § 133). Any reply received by the Office later than three months after the mailing date of this communication, even if timely filed, may reduce any earned patent term adjustment. See 37 CFR 1.704(b).

Status

1)☑ Responsive to communication(s) filed on 12/01/2023.

☐ A declaration(s)/affidavit(s) under **37 CFR 1.130(b)** was/were filed on _____.

2a)☐ This action is **FINAL.** 2b) ☑ This action is non-final.

3)☐ An election was made by the applicant in response to a restriction requirement set forth during the interview on _____; the restriction requirement and election have been incorporated into this action.

4)☐ Since this application is in condition for allowance except for formal matters, prosecution as to the merits is closed in accordance with the practice under *Ex parte Quayle*, 1935 C.D. 11, 453 O.G. 213.

Disposition of Claims*

5) ☑ Claim(s) 21-40 is/are pending in the application.

5a) Of the above claim(s) _____ is/are withdrawn from consideration.

6) ☐ Claim(s) _____ is/are allowed.

7) ☑ Claim(s) 21-40 is/are rejected.

8) ☐ Claim(s) _____ is/are objected to.

9) ☐ Claim(s) _____ are subject to restriction and/or election requirement

* If any claims have been determined allowable, you may be eligible to benefit from the **Patent Prosecution Highway** program at a participating intellectual property office for the corresponding application. For more information, please see http://www.uspto.gov/patents/init_events/pph/index.jsp or send an inquiry to **PPHfeedback@uspto.gov.**

Application Papers

10)☐ The specification is objected to by the Examiner.

11)☑ The drawing(s) filed on 12/01/2023 is/are: a)☑ accepted or b)☐ objected to by the Examiner.

Applicant may not request that any objection to the drawing(s) be held in abeyance. See 37 CFR 1.85(a).

Replacement drawing sheet(s) including the correction is required if the drawing(s) is objected to. See 37 CFR 1.121(d).

Priority under 35 U.S.C. § 119

12)☐ Acknowledgment is made of a claim for foreign priority under 35 U.S.C. § 119(a)-(d) or (f).

Certified copies:

a)☐ All b)☐ Some** c)☐ None of the:

1.☐ Certified copies of the priority documents have been received.

2.☐ Certified copies of the priority documents have been received in Application No. _____.

3.☐ Copies of the certified copies of the priority documents have been received in this National Stage application from the International Bureau (PCT Rule 17.2(a)).

** See the attached detailed Office action for a list of the certified copies not received.

Attachment(s)

1) ☑ Notice of References Cited (PTO-892)

2) ☑ Information Disclosure Statement(s) (PTO/SB/08a and/or PTO/SB/08b) Paper No(s)/Mail Date 12/01/2023.

3) ☐ Interview Summary (PTO-413) Paper No(s)/Mail Date _____.

4) ☐ Other: _____.

DETAILED ACTION

1. This Office Action is sent in response to Applicant's communication received on 12/01/2023 for application number 18/527,226. The Office herby acknowledges receipt of the following and placed of record in file: Specification, Drawings, Abstract, Oath/Declaration, and claims.

Notice of Pre-AIA or AIA Status

2. The present application, filed on or after March 16, 2013, is being examined under the first inventor to file provisions of the AIA.

Information Disclosure Statement

3. The information disclosure statement (IDS) submitted on 12/01/2023 is in accordance with provisions of 37 CFR 1.97. Accordingly, the information disclosure statement is being considered by the examiner.

Double Patenting

4. The nonstatutory double patenting rejection is based on a judicially created doctrine grounded in public policy (a policy reflected in the statute) so as to prevent the unjustified or improper timewise extension of the "right to exclude" granted by a patent and to prevent possible harassment by multiple assignees. A nonstatutory double patenting rejection is appropriate where the conflicting claims are not identical, but at least one examined application claim is not patentably distinct from the reference claim(s) because the examined application claim is either anticipated by, or would have been obvious over, the reference claim(s). See, e.g., *In re Berg*, 140 F.3d 1428, 46 USPQ2d 1226 (Fed. Cir. 1998); *In re Goodman*, 11 F.3d 1046, 29 USPQ2d 2010 (Fed. Cir. 1993); *In re Longi*, 759 F.2d 887, 225 USPQ 645 (Fed. Cir. 1985); *In re Van*

Ornum, 686 F.2d 937, 214 USPQ 761 (CCPA 1982); *In re Vogel*, 422 F.2d 438, 164 USPQ 619 (CCPA 1970); *In re Thorington*, 418 F.2d 528, 163 USPQ 644 (CCPA 1969).

5. A timely filed terminal disclaimer in compliance with 37 CFR 1.321(c) or 1.321(d) may be used to overcome an actual or provisional rejection based on nonstatutory double patenting provided the reference application or patent either is shown to be commonly owned with the examined application, or claims an invention made as a result of activities undertaken within the scope of a joint research agreement. See MPEP § 717.02 for applications subject to examination under the first inventor to file provisions of the AIA as explained in MPEP § 2159. See MPEP §§ 706.02(l)(1) - 706.02(l)(3) for applications not subject to examination under the first inventor to file provisions of the AIA. A terminal disclaimer must be signed in compliance with 37 CFR 1.321(b).

6. The USPTO Internet website contains terminal disclaimer forms which may be used. Please visit www.uspto.gov/patent/patents-forms. The filing date of the application in which the form is filed determines what form (e.g., PTO/SB/25, PTO/SB/26, PTO/AIA/25, or PTO/AIA/26) should be used. A web-based eTerminal Disclaimer may be filled out completely online using web-screens. An eTerminal Disclaimer that meets all requirements is auto-processed and approved immediately upon submission. For more information about eTerminal Disclaimers, refer to www.uspto.gov/patents/process/file/efs/guidance/eTD-info-I.jsp.

7. Claims 21-22, 28 are rejected on the ground of nonstatutory double patenting as being unpatentable over claims 1, 5, 8 of U.S. Patent No. 11,875,580. Although the claims at issue are not identical, they are not patentably distinct from each other: Table 1 shows comparison between the instant claims and the U.S. Patent 11,875,580 B1 claims.

See Table:

App: 18/527,226	Patent: 11,875,580
21. (New) A method comprising: receiving an image of a roadway recorded by a camera device installed within a vehicle; detecting a horizon line in the image; overlaying a line on the image to generate an overlaid image; transmitting the overlaid image to a computing device over a network; receiving a modification of the line from the computing device, the modification comprising a new line at a second position; computing a camera parameter based on the new line; and transmitting data representing the camera parameter to the camera device.	1. A method comprising: receiving, over a network from a camera device, a video comprising a set of image frames; identifying one or more lines in the video using a predictive model, the one or more lines including a horizon line; computing at least one camera parameter based on the one or more lines; overlaying the one or more lines on the video to generate an overlaid video; transmitting the overlaid video to an annotator device for manual review; receiving a confirmation from the annotator device, the confirmation indicating that the one or more lines are accurate; and transmitting data representing the at least one camera parameter to the camera device.
22. (New) The method of claim 21, wherein the camera parameter comprises one of camera height, viewing angle, and road plane normal.	5. The method of claim 1, wherein the at least one camera parameter comprises a camera height and road plane normal.

28. (New) A non-transitory computer-readable storage medium for tangibly storing computer program that, when executed by a computer processor, perform operations of: receiving an image of a roadway recorded by a camera device installed within a vehicle; detecting a horizon line in the image; overlaying a line on the image to generate an overlaid image; transmitting the overlaid image to a computing device over a network; receiving a modification of the line from the computing device, the modification comprising a new line at a second position; computing a camera parameter based on the new line; and transmitting data representing the camera parameter to the camera device.	8. A method comprising: receiving a video, the video comprising one or more image frames; generating a set of intermediate features representing the video using a backbone network; inputting the set of intermediate features into a lane or horizon prediction head, the lane or horizon prediction head comprising a neural network; predicting a horizon line using the lane or horizon prediction head, the horizon line comprising a set of horizon markers; and using the horizon line to compute at least one camera parameter.

Claim Rejections - 35 USC § 103

8. The following is a quotation of 35 U.S.C. 103 which forms the basis for all obviousness rejections set forth in this Office action:

> A patent for a claimed invention may not be obtained, notwithstanding that the claimed invention is not identically disclosed as set forth in section 102, if the differences between the claimed invention and the prior art are such that the claimed invention as a whole would have been obvious before the effective filing date of the claimed invention to a person having ordinary skill in the art to which the claimed invention pertains. Patentability shall not be negated by the manner in which the invention was made.

9. The factual inquiries for establishing a background for determining obviousness under 35 U.S.C. 103 are summarized as follows:

1. Determining the scope and contents of the prior art.

2. Ascertaining the differences between the prior art and the claims at issue.

3. Resolving the level of ordinary skill in the pertinent art.

4. Considering objective evidence present in the application indicating obviousness or nonobviousness.

10. This application currently names joint inventors. In considering patentability of the claims the examiner presumes that the subject matter of the various claims was commonly owned as of the effective filing date of the claimed invention(s) absent any evidence to the contrary. Applicant is advised of the obligation under 37 CFR 1.56 to point out the inventor and effective filing dates of each claim that was not commonly owned as of the effective filing date of the later invention in order for the examiner to consider the applicability of 35 U.S.C. 102(b)(2)(C) for any potential 35 U.S.C. 102(a)(2) prior art against the later invention.

11. Claim(s) 21-40 is/are rejected under 35 U.S.C. 103 as being unpatentable over Kwant1 et al., [US Pub. No.: 2019/0034740 A1] Kwant2 et al., [US Pub. No.: 2019/0102674 A1].

Re. Claim 21. Kwant1 discloses

A method comprising: receiving an image of a roadway recorded by a camera device installed within a vehicle ***[network for receiving image signals from a vehicle camera of a roadway |Fig.1 el 113, 0076, 0081]***;

detecting a horizon line in the image ***[determining a horizontal line in the image at which a maximum number of the one or more extended road lanes crosses over a minimum horizontal extent of the horizontal line |Abstract]***;

overlaying a line on the image to generate an overlaid image ***[Fig.4 401A-C]***;

transmitting the overlaid image to a computing device over a network ***[In step 607, the horizon estimation platform 105 labels or annotates one or more map features depicted in the image based on the horizon|Fig.1 el 100, Fig.6 Step 607, 0071]***;

In the same field of endeavor Kwant2 discloses:

receiving a modification of the line from the computing device, the modification comprising a new line at a second position ***[The learner module then computes an accuracy of the predictions for the initial set of model parameters. If the accuracy or level of performance does not meet a threshold or configured level, the learner module incrementally adjusts the model parameters until the model generates predictions at a desired or configured level of accuracy with respect to the manually annotated labels in the training data (e.g., the ground truth data).|0051]***;

computing a camera parameter based on the new line ***[The machine learning system 103 generates respective distributions or probability models for the training set 401 and the reservoir set 405 according to the various embodiments described herein. These distributions are combined into a single model (e.g., the sampling distribution 401) describing a candidate observation 407's similarity to the training set and/or the candidate pool at evaluation time to either accept or reject the candidate observation 407 from the reservoir set 405 for annotation and inclusion in the training data set 403]***;

and transmitting data representing the camera parameter to the camera device ***[data representing camera parameter to the camera device |Fig. 8a]***.

Therefore, it would have been obvious to one with ordinary skill in the art before the effective filing date of the claimed invention to combine the horizon estimation using lane lines of Kwant1 with Kwant2 for selecting representative training observations for annotation in machine learning model.

Re. Claim 22, Kwant1 discloses:

The method of claim 21, wherein the camera parameter comprises one of camera height, viewing angle, and road plane normal ***[camera height, viewing angle and roadway parameters |Fig.3, 0051,0082]***.

Re. Claim 23, Kwant1 discloses:

The method of claim 21, wherein receiving the image of the roadway comprises receiving an image of the roadway while the vehicle is moving ***[images roadway are received during vehicle operation |Fig.4a-b, 5a-c]***.

Re. Claim 24, Kwant1 discloses:

The method of claim 23, wherein receiving the image of the roadway while the vehicle is moving comprises detecting that the vehicle is traveling above a pre-defined speed or for a pre-defined duration ***[vehicle speed and roadway speed level information is tracked and or received |0099, 0101]***.

Re. Claim 25, Kwant1 discloses:

The method of claim 21, wherein transmitting the overlaid image to the computing device over the network comprises transmitting the overlaid image to a web-based application ***[components of the horizon estimation system capable to transmit images over a network to a web-based application |Fig.1, 0038, 0056, 0063, 0081]***.

Re. Claim 26, Kwant1 discloses:

The method of claim 21, wherein receiving the modification of the line from the computing device comprises receiving an identification of a new horizon line by a user of the computing device ***[to account for variances in the slopes of the roadway, the horizon estimation platform 105 detects a slope of the roadway, and adjusts the horizon based on the slope. The horizon estimation platform 105, for instance, can determine the slope from one or more sensors of a vehicle… to the examiner adjusting horizon line is identifying a new horizon based captured sensor data |0057]***.

Re. Claim 27, the rejection of claim 1 is incorporated herein.

Kwant1 & Kwant2 discloses the claim limitations, as follows:

The method of claim 21, wherein transmitting the data representing the camera parameter to the camera device ***[Kwant2: data representing camera parameter to the camera device |Fig. 8a]*** further comprises recomputing the camera parameter based on the modification of the line ***[Kwant1: a parametric representation of a line can have 12 parameters in one set to describe a single lane line. |0013]***.

Re. Claim 28, This claim is interpreted and rejected for the same reason set forth in claim 21.

Re. Claim 29, This claim is interpreted and rejected for the same reason set forth in claim 22.

Re. Claim 30, This claim is interpreted and rejected for the same reason set forth in claim 23.

Re. Claim 31, This claim is interpreted and rejected for the same reason set forth in claim 24.

Re. Claim 32, This claim is interpreted and rejected for the same reason set forth in claim 25.

Re. Claim 33, This claim is interpreted and rejected for the same reason set forth in claim 26.

Re. Claim 34, This claim is interpreted and rejected for the same reason set forth in claim 27.

Re. Claim 35, This claim is interpreted and rejected for the same reason set forth in claim 1 & 28 including a device comprising: a processor ***[Fig. 14, box 1403]***;
and a storage medium for tangibly storing thereon program logic for execution by the processor ***[Fig. 14 box 1405].***

Re. Claim 36, This claim is interpreted and rejected for the same reason set forth in claims 23 & 30.

Re. Claim 37, This claim is interpreted and rejected for the same reason set forth in claims 24 & 31.

Re. Claim 38, This claim is interpreted and rejected for the same reason set forth in claims 25 & 32.

Re. Claim 39, This claim is interpreted and rejected for the same reason set forth in claims 26 & 33.

Re. Claim 40, This claim is interpreted and rejected for the same reason set forth in claims 27 & 34.

Conclusion

Any inquiry concerning this communication or earlier communications from the examiner should be directed to HOWARD D BROWN JR whose telephone number is (571)272-4371. The examiner can normally be reached Monday - Friday 7:30AM - 5:00PM EST.

Examiner interviews are available via telephone, in-person, and video conferencing using a USPTO supplied web-based collaboration tool. To schedule an interview, applicant is encouraged to use the USPTO Automated Interview Request (AIR) at http://www.uspto.gov/interviewpractice.

If attempts to reach the examiner by telephone are unsuccessful, the examiner's supervisor, Sathyanarayanan Perungavoor can be reached on 5712727455. The fax phone number for the organization where this application or proceeding is assigned is 571-273-8300.

Information regarding the status of published or unpublished applications may be obtained from Patent Center. Unpublished application information in Patent Center is available to registered users. To file and manage patent submissions in Patent Center, visit:

https://patentcenter.uspto.gov. Visit https://www.uspto.gov/patents/apply/patent-center for more information about Patent Center and https://www.uspto.gov/patents/docx for information about filing in DOCX format. For additional questions, contact the Electronic Business Center (EBC) at 866-217-9197 (toll-free). If you would like assistance from a USPTO Customer Service Representative, call 800-786-9199 (IN USA OR CANADA) or 571-272-1000.

HOWARD D. BROWN JR
Primary Examiner
Art Unit 2488

/HOWARD D BROWN JR/
Examiner, Art Unit 2488

United States Patent and Trademark Office

Office of the Commissioner for Patents

Dear Applicant,

You recently received an Office action from your examiner. Review of your patent application is under way! You can continue to advertise or mark any products covered by your application for your invention as "Patent Pending" for as long as this application is pending. This letter provides information about how to continue through the patent application process and the help available to you on your journey.

Where are you in the patent application process? Your patent application is now in step 3, Application Prosecution (www.uspto.gov/UtilityPatentGuide.) Though the Office action includes a "rejection," that does not mean that you don't have a good idea you can patent. It means your examiner believes your application is not yet ready for allowance.

Ready to respond? Responding to the Office action is your opportunity to address the issues raised by your examiner. Responses must be timely, complete, and in writing. In your response, you may want to consider amending your application (www.uspto.gov/patents/maintain/responding-office-actions).

We provide Pro Se Assistance, support specifically geared for independent inventors without an agent or attorney. Visit www.uspto.gov/ProSePatents for a consolidated list of resources, including a sample amendment format. Full description of amendment formatting can be found at www.uspto.gov/web/offices/pac/mpep/s714.html. Call us at 866-767-3848, or email proseassistancecenter@uspto.gov.

Have questions about the Office action? Contact your examiner! A conversation with your examiner (called an "interview") may help clarify and resolve any issues and possibly identify what you can patent. While an interview does not stop the clock for your official response or substitute for a response, there is no fee for an interview. To schedule a call or video, you can:

1. use the USPTO's Automated Interview Request (AIR) form (www.uspto.gov/patents/uspto-automated-interview-request-air-form);
2. file the Applicant Initiated Interview Request form (PTOL-413A) (www.uspto.gov/sites/default/files/documents/PTOL413A.pdf); or
3. contact your examiner directly via telephone (contact information is provided at the end of your Office action).

Need help near you? We have regional offices across the country (www.uspto.gov/locations), as well as Patent and Trademark Resource Centers in libraries in nearly every state (www.uspto.gov/ptrc), with specialists standing by to help you at no cost.

Become a *registered* electronic filer (registered eFiler). As a registered eFiler, you can electronically view your submission, track progress of your application, and respond to USPTO correspondence. (www.uspto.gov/NewPatentFilers)

Contact us

- General information: USPTO Contact Center — 800-786-9199 • TTY/TDD 800-877-8339 • www.uspto.gov/help
- Patent Center: Patent Electronic Business Center www.uspto.gov/EBC
- Inventors Assistance Center www.uspto.gov/inventorassistance

Want to learn more?

- Hear about resources for startups, inventors, and entrepreneurs, as well as our initiatives engaging women, the military community, and others. These programs offer helpful tips and tricks on identifying and managing your IP, finding options for funding, and expanding your network to support your business.
  - www.uspto.gov/startups
  - www.uspto.gov/inventors
  - www.uspto.gov/initiatives
- Access our free services all in one spot. Find all of our contact centers, nationwide services, events, education and training. (www.uspto.gov/FreeServices)
- Connect with us on Instagram, LinkedIn, Twitter, Facebook, and YouTube.
- Hear about the great things we are doing by subscribing at www.uspto.gov/subscribe.

Best,

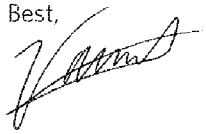

Vaishali Udupa
Commissioner for Patents
United States Patent and Trademark Office

PTO/SB/06 (09-11)
Approved for use through 1/31/2014. OMB 0651-0032
U.S. Patent and Trademark Office; U.S. DEPARTMENT OF COMMERCE
Under the Paperwork Reduction Act of 1995, no persons are required to respond to a collection of information unless it displays a valid OMB control number.

PATENT APPLICATION FEE DETERMINATION RECORD Substitute for Form PTO-875	Application or Docket Number 18/527,226	Filing Date 12/01/2023	☐ To be Mailed

ENTITY: ☑ LARGE ☐ SMALL ☐ MICRO

APPLICATION AS FILED - PART I

FOR	(Column 1) NUMBER FILED	(Column 2) NUMBER EXTRA		RATE ($)	FEE ($)
☐ BASIC FEE (37 CFR 1.16(a), (b), or (c))	N/A	N/A		N/A	
☐ SEARCH FEE (37 CFR 1.16(k), (i), or (m))	N/A	N/A		N/A	
☐ EXAMINATION FEE (37 CFR 1.16(o), (p), or (q))	N/A	N/A		N/A	
TOTAL CLAIMS (37 CFR 1.16(i))	minus 20 =	*		x $100 =	
INDEPENDENT CLAIMS (37 CFR 1.16(h))	minus 3 =	*		x $480 =	
☐ APPLICATION SIZE FEE (37 CFR 1.16(s))	If the specification and drawings exceed 100 sheets of paper, the application size fee due is $310 ($155 for small entity) for each additional 50 sheets or fraction thereof. See 35 U.S.C. 41(a)(1)(G) and 37 CFR 1.16(s).				
☐ MULTIPLE DEPENDENT CLAIM PRESENT (37 CFR 1.16(j))					
* If the difference in column 1 is less than zero, enter "0" in column 2.				TOTAL	

APPLICATION AS AMENDED - PART II

		(Column 1)		(Column 2)	(Column 3)			
AMENDMENT	09/12/2024	CLAIMS REMAINING AFTER AMENDMENT		HIGHEST NUMBER PREVIOUSLY PAID FOR	PRESENT EXTRA		RATE ($)	ADDITIONAL FEE ($)
	Total (37 CFR 1.16(i))	* 20	Minus	** 20	= 0		x $100 =	0
	Independent (37 CFR 1.16(h))	* 3	Minus	*** 3	= 0		x $480 =	0
	☐ Application Size Fee (37 CFR 1.16(s))							
	☐ FIRST PRESENTATION OF MULTIPLE DEPENDENT CLAIM (37 CFR 1.16(j))							
							TOTAL ADD'L FEE	0

		(Column 1)		(Column 2)	(Column 3)			
AMENDMENT		CLAIMS REMAINING AFTER AMENDMENT		HIGHEST NUMBER PREVIOUSLY PAID FOR	PRESENT EXTRA		RATE ($)	ADDITIONAL FEE ($)
	Total (37 CFR 1.16(i))	*	Minus	**	=		x $0 =	
	Independent (37 CFR 1.16(h))	*	Minus	***	=		x $0 =	
	☐ Application Size Fee (37 CFR 1.16(s))							
	☐ FIRST PRESENTATION OF MULTIPLE DEPENDENT CLAIM (37 CFR 1.16(j))							
							TOTAL ADD'L FEE	

* If the entry in column 1 is less than the entry in column 2, write "0" in column 3.	PSA
** If the "Highest Number Previously Paid For" IN THIS SPACE is less than 20, enter "20".	/LINDA A WISE/
*** If the "Highest Number Previously Paid For" IN THIS SPACE is less than 3, enter "3".	
The "Highest Number Previously Paid For" (Total or Independent) is the highest number found in the appropriate box in column 1.	

This collection of information is required by 37 CFR 1.16. The information is required to obtain or retain a benefit by the public which is to file (and by the USPTO to process) an application. Confidentiality is governed by 35 U.S.C. 122 and 37 CFR 1.14. This collection is estimated to take 12 minutes to complete, including gathering, preparing, and submitting the completed application form to the USPTO. Time will vary depending upon the individual case. Any comments on the amount of time you require to complete this form and/or suggestions for reducing this burden, should be sent to the Chief Information Officer, U.S. Patent and Trademark Office, U.S. Department of Commerce, P.O. Box 1450, Alexandria, VA 22313-1450. DO NOT SEND FEES OR COMPLETED FORMS TO THIS ADDRESS. **SEND TO: Commissioner for Patents, P.O. Box 1450, Alexandria, VA 22313-1450.**

If you need assistance in completing the form, call 1-800-PTO-9199 and select option 2.

IN THE UNITED STATES PATENT AND TRADEMARK OFFICE

Inventor(s)	A. Hassan *et al.*	Examiner	H. Brown Jr.
Serial No.	18/527,226	Art Unit	2488
Filed	Dec. 1, 2023	Confirmation	7088
Title	CAMERA INITIALIZATION FOR LANE DETECTION AND DISTANCE ESTIMATION USING SINGLE-VIEW GEOMETRY		

RESPONSE TO OFFICE ACTION

COMMISSIONER FOR PATENTS
P.O. BOX 1450
ALEXANDRIA, VA 22313-1450

Dear Sir:

In response to the Office Action dated June 12, 2024, please reconsider the application in view of the following remarks.

LISTING OF THE CLAIMS

The following listing of claims replaces all previous listings.

1–20. (Canceled)

21. (Previously Presented) A method comprising:

receiving an image of a roadway recorded by a camera device installed within a vehicle;

detecting a horizon line in the image;

overlaying a line on the image to generate an overlaid image;

transmitting the overlaid image to a computing device over a network;

receiving a modification of the line from the computing device, the modification comprising a new line at a second position;

computing a camera parameter based on the new line; and

transmitting data representing the camera parameter to the camera device.

22. (Previously Presented) The method of claim 21, wherein the camera parameter comprises one of camera height, viewing angle, and road plane normal.

23. (Previously Presented) The method of claim 21, wherein receiving the image of the roadway comprises receiving an image of the roadway while the vehicle is moving.

24. (Previously Presented) The method of claim 23, wherein receiving the image of the roadway while the vehicle is moving comprises detecting that the vehicle is traveling above a pre-defined speed or for a pre-defined duration.

25. (Previously Presented) The method of claim 21, wherein transmitting the overlaid image to the computing device over the network comprises transmitting the overlaid image to a web-based application.

26. (Previously Presented) The method of claim 21, wherein receiving the modification of the line from the computing device comprises receiving an identification of a new horizon line by a user of the computing device.

27. (Previously Presented) The method of claim 21, wherein transmitting the data representing the camera parameter to the camera device further comprises recomputing the camera parameter based on the modification of the line.

28. (Previously Presented) A non-transitory computer-readable storage medium for tangibly storing computer program that, when executed by a computer processor, perform operations of:

receiving an image of a roadway recorded by a camera device installed within a vehicle;

detecting a horizon line in the image;

overlaying a line on the image to generate an overlaid image;

transmitting the overlaid image to a computing device over a network;

receiving a modification of the line from the computing device, the modification comprising a new line at a second position;

computing a camera parameter based on the new line; and

transmitting data representing the camera parameter to the camera device.

29. (Previously Presented) The non-transitory computer-readable storage medium of claim 28, wherein the camera parameter comprises one of camera height, viewing angle, and road plane normal.

30. (Previously Presented) The non-transitory computer-readable storage medium of claim 28, wherein receiving the image of the roadway comprises receiving an image of the roadway while the vehicle is moving.

31. (Previously Presented) The non-transitory computer-readable storage medium of claim 30, wherein receiving the image of the roadway while the vehicle is moving comprises detecting that the vehicle is traveling above a pre-defined speed or for a pre-defined duration.

32. (Previously Presented) The non-transitory computer-readable storage medium of claim 28, wherein transmitting the overlaid image to the computing device over the network comprises transmitting the overlaid image to a web-based application.

33. (Previously Presented) The non-transitory computer-readable storage medium of claim 28, wherein receiving the modification of the line from the computing device comprises receiving an identification of a new horizon line by a user of the computing device.

34. (Previously Presented) The non-transitory computer-readable storage medium of claim 28, wherein transmitting the data representing the camera parameter to the camera device further comprises recomputing the camera parameter based on the modification of the line.

35. (Previously Presented) A device comprising:

a processor; and

a storage medium for tangibly storing thereon program logic for execution by the processor, the program logic comprising logic for:

receiving an image of a roadway recorded by a camera device installed within a vehicle;

detecting a horizon line in the image;

overlaying a line on the image to generate an overlaid image;

transmitting the overlaid image to a computing device over a network;

receiving a modification of the line from the computing device, the modification comprising a new line at a second position;

computing a camera parameter based on the new line; and

transmitting data representing the camera parameter to the camera device.

36. (Previously Presented) The device of claim 35, wherein receiving the image of the roadway comprises receiving an image of the roadway while the vehicle is moving.

37. (Previously Presented) The device of claim 36, wherein receiving the image of the roadway while the vehicle is moving comprises detecting that the vehicle is traveling above a pre-defined speed or for a pre-defined duration.

38. (Previously Presented) The device of claim 35, wherein transmitting the overlaid image to the computing device over the network comprises transmitting the overlaid image to a web-based application.

39. (Previously Presented) The device of claim 35, wherein receiving the modification of the line from the computing device comprises receiving an identification of a new horizon line by a user of the computing device.

40. (Previously Presented) The device of claim 35, wherein transmitting the data representing the camera parameter to the camera device further comprises recomputing the camera parameter based on the modification of the line.

REMARKS

Claims 21 through 40 are pending. Applicant previously canceled claims 1 through 20 without prejudice.

1 Double Patenting

The Office Action rejects claims 21, 22, and 28 on the grounds of non-statutory double patenting over claims 1, 5, and 8 of parent U.S. Pat. No. 11,875,580 (the "'580 Patent"). While Applicant does not concede that the rejection is proper, Applicant will file a terminal disclaimer in due course.

2 Rejections under 35 U.S.C. § 103

The Office Action rejects claims 1 through 20 under 35 U.S.C. § 103 over U.S. Pat. Pub. No. 2019/0034740 ("Kwant1") and U.S. Pat. Pub. No. 2019/0102674 ("Kwant2"). Applicant respectfully disagrees and traverses.

Kwant1 describes a system for "estimating a vanishing point or horizon in an image depicting one or more lanes of a roadway."[1] In short, Kwant1 builds a lane model and extends road lanes through a potential horizon.[2] Kwant1 then includes "determining a horizontal line in the image at which a maximum number of the one or more extended road lanes crosses over a minimum horizontal extent of the horizontal line."[3] This horizontal line is then used as the horizon.[4]

With respect to claim 21, the Office Action contend that Kwant1 teaches or suggests:

> overlaying a line on the image to generate an overlaid image; [and]

[1] Kwant1 at Abstract.
[2] *See id.*
[3] *Id.*
[4] *Id.*

> transmitting the overlaid image to a computing device over a network.

Applicant respectfully disagrees.

Notably, Kwant1 never performs any type of visualization of the horizon line. Instead, Kwant1 at most describes using a horizon line as a tool for *other* operations that do not include visualizing the horizon. Specifically, and as cited by the Office Action, Kwant1 describes "annotating" images.[5] However, these annotations do not involve "overlaying" the horizon as claimed. Instead, they refer to annotating *other objects* (e.g., signs) by using the horizon line as a point of reference.[6] Thus, Applicant disagrees and asserts that Kwant1 fails to describe the overlaying and transmitting steps quoted above.

Claim 21 further recites:

> receiving a modification of the line from the computing device, the modification comprising a new line at a second position;
>
> computing a camera parameter based on the new line; and
>
> transmitting data representing the camera parameter to the camera device.

The Office Action concedes that Kwant1 fails to teach or suggest this process. Applicant agrees. Similar to the discussion above, Kwant1 describes various ways in which the horizon can be used for *other* operations.[7] What Kwant1 does *not* disclose however is modifying the horizon. Indeed, Kwant1 assumes that the algorithm used to compute the horizon is accurate.

---

[5] *See generally id.* at ¶ 71.
[6] *Id.* ("The horizon estimation platform 105 can localize the any detected objects in the image 843 (e.g., the sign 845) by localizing the sign 845 based, at least in part, on a distance 847 to the estimated horizon, and then identifying the localized sign 845 by querying the geographic database for the HD location information for a matching sign in the geographic database 111.")
[7] *See generally id.* at FIG. 6 and accompanying discussion.

The Office Action cites Kwant2 as remedying this deficiency of Kwant1. Applicant respectfully disagrees.

The cited portions of Kwant2 describe a machine learning system which includes a "learner module."[8] Notably, Kwant2's discussion of this learner module is, essentially, describing backpropagation with a loss function:

> For example, during training, the machine learning system 103 uses a learner module that feeds feature sets from the training data set into the machine learning model to compute a predicted matching feature using an initial set of model parameters. The learner module then compares the predicted matching probability and the predicted feature to the ground truth data (e.g., the manually annotated feature labels) in the training data set for each observation (e.g., image) used for training. The learner module then computes an accuracy of the predictions for the initial set of model parameters. If the accuracy or level of performance does not meet a threshold or configured level, the learner module incrementally adjusts the model parameters until the model generates predictions at a desired or configured level of accuracy with respect to the manually annotated labels in the training data (e.g., the ground truth data). [9]

That is, the learner module makes a prediction on an input feature, compares the prediction to a ground truth label, and adjusts the model parameters until the predictions meet the desired accuracy rate.

This is not what is claimed.

Claim 21 recites "receiving a modification of the line from the computing device, the modification comprising a new line at a second position." Putting aside that Kwant2 describes a model training process (not a verification), nothing in Kwant2 describes computing a "new line at a second position." By contrast, Kwant2 describes predicting a "label" and the comparing it to a known label. This is a fundamentally different operation. For example, if one were to apply Kwant2 to a horizon line, it would require Kwant2 to

[8] Kwant2 at ¶ 50.
[9] *Id.*

receive an image with a horizon line, compute a label (e.g., "accurate" or "not accurate") and compare that to a ground truth label to backpropagate and tune the model. At no point does Kwant2 describe a *generative* step of computing a new line in this type of operation. As a second example, even if the labels in Kwant2 were horizontal lines,[10] there is no evidence that Kwant2 receives a horizontal line, predicts a new horizontal line, and then compares the new horizontal line to a third horizontal line. Indeed, at best, one would assume that Kwant2 receive a image with no horizon, compute the horizon, then compare the computed horizon to an expected horizon. In this example, there is no "modification" of a line.

Even if Kwant2 were construed to describe a generative model (a point not conceded), Kwant2 fails to describe "computing a camera parameter based on the new line." First, it is unclear what portion of Kwant2 is cited for this feature as the Office Action refers to "FIG. 8A" which appears in Kwant1 and not Kwant2.

Applicant notes, however, that the "parameters" tuned in Kwant2 are not *camera* parameters, they are internal weights and biases of a neural network. Simply stated, the parameters tuned in Kwant2 have no relation to a camera, but are related instead to how the machine learning system processes feature vectors. By contrast, the claims camera parameters are specifically related to the operation of a camera. As described in the specification, the horizon line can be used to adjust the settings of a camera via camera parameters. This operation is wholly absent from Kwant2. Further, FIG. 8A of Kwant1 merely describes an alert that a lane model is inconsistent. This alert does compute or update a camera parameter, it merely alerts the user of a problem. As such, neither references teaches or suggests the claimed camera parameter.

For these reasons, Applicant asserts that the cited art fails to teach or suggest each and every element of claim 1. Further, the remaining independent recite similar elements and

[10] Applicant does not concede Kwant2 operates at all in this manner, but merely presents this example to expedite prosecution. Specifically, Kwant2 only describes "feature labels" which cannot reasonably be interpreted as representing geometric objects.

are thus allowable over the cited art for at least the same reasons. Finally, the dependent claims are allowable over the cited art for at least the reasons set forth with respect to the independent claims.

As a result, the cited prior art, alone or in combination, fails to teach or suggest all elements of the claims, and thus Applicant respectfully requests the withdrawal of the rejection based upon such combination.

3 Conclusion

It is respectfully submitted that all of the Examiner's objections have been successfully traversed and that the application is now in order for allowance. Accordingly, reconsideration of the application and allowance thereof is courteously solicited. Authorization is hereby provided to charge any fees which may be required for the present filing, or credit any overpayment, to Deposit Account No. 50-2638.

Respectfully submitted,
/George Zalepa/
George Zalepa
Reg. No. 72,706

GREENBERG TRAURIG, LLP
CUSTOMER NUMBER 32361
Phone: (973) 443-3241

UNITED STATES
PATENT AND TRADEMARK OFFICE

P.O. Box 1450
Alexandria, VA 22313 - 1450
www.uspto.gov

ELECTRONIC ACKNOWLEDGEMENT RECEIPT

APPLICATION #	RECEIPT DATE / TIME	ATTORNEY DOCKET #
18/527,226	**09/12/2024 11:59:24 AM Z ET**	**189908.000302**

Title of Invention

CAMERA INITIALIZATION FOR LANE DETECTION AND DISTANCE ESTIMATION USING SINGLE-VIEW GEOMETRY

Application Information

APPLICATION TYPE	Utility - Nonprovisional Application under 35 USC 111(a)	PATENT #	-
CONFIRMATION #	7088	FILED BY	Judi Cordo
PATENT CENTER #	67147176	FILING DATE	12/01/2023
CUSTOMER #	32361	FIRST NAMED INVENTOR	Ali HASSAN
CORRESPONDENCE ADDRESS	-	AUTHORIZED BY	George Zalepa

Documents

TOTAL DOCUMENTS: 3

DOCUMENT		PAGES	DESCRIPTION	SIZE (KB)
189908_000302_response.pdf		10	-	201 KB
189908_000302_response-A....pdf	(1-1)	1	Amendment/Request for Reconsideration-After Non-Final Rejection	101 KB
189908_000302_response-CLM.pdf	(2-5)	4	Claims	110 KB
189908_000302_response-REM.pdf	(6-10)	5	Applicant Arguments/Remarks Made in an Amendment	149 KB

Digest

DOCUMENT	MESSAGE DIGEST(SHA-512)
189908_000302_response.pdf	98BB15A57DAAA4E4FD72A8F91B718A5F41FF3EA18E46C2903AAC52EE805D8F2B8AF048F5EDC05865AE2A0F200CDB7FA5E166D07DB91AA821ACC338665769DB7C
189908_000302_response-A....pdf	F865B63D090A0A13ADEBF75E2099817D29D24F68ECA120CDC25A76DA9B671968559F2C0CDE271E707550F877B37DC03694A9673F78384DC2074C5013C2344F4B
189908_000302_response-CLM.pdf	A99093E25E149AB00F9CA3D19FF1A7C27097378B85C69DDA4A5A8CA6907E686ACB6D52F15951E2255CCCFBFD394C7086FCCFC83EEEAC5CA75D333FCDE280F574
189908_000302_response-REM.pdf	C8CEF710A6BD02A12553A1683B659885E25DEB5B72A18E26BEE35076BF2F8E7A0D9FD4C81FF194C05011CFCBD3850D859B47A4364440E70EA8C6CF15D781A579

This Acknowledgement Receipt evidences receipt on the noted date by the USPTO of the indicated documents, characterized by the applicant, and including page counts, where applicable. It serves as evidence of receipt similar to a Post Card, as described in MPEP 503.

New Applications Under 35 U.S.C. 111

If a new application is being filed and the application includes the necessary components for filing date (see 37 CFR 1.53(b)-(d) and MPEP 506), a Filing Receipt (37 CFR 1.54) will be issued in due course and the date shown on this Acknowledgement Receipt will establish the filing date of the application

National Stage of an International Application under 35 U.S.C. 371

If a timely submission to enter the national stage of an international application is compliant with the conditions of 35 U.S.C. 371 and other applicable requirements a Form PCT/DO/EO/903 indicating acceptance of the application as a national stage submission under 35 U.S.C. 371 will be issued in addition to the Filing Receipt, in due course.

New International Application Filed with the USPTO as a Receiving Office

If a new international application is being filed and the international application includes the necessary components for an international filing date (see PCT Article 11 and MPEP 1810), a Notification of the International Application Number and of the International Filing Date (Form PCT/RO/105) will be issued in due course, subject to prescriptions concerning national security, and the date shown on this Acknowledgement Receipt will establish the international filing date of the application.

UNITED STATES
PATENT AND TRADEMARK OFFICE

Commissioner for Patents
United States Patent and Trademark Office
P.O. Box 1450
Alexandria, VA 22313 - 1450
www.uspto.gov

APPROVAL LETTER

APPLICATION #	FILING DATE	APPLICANT/PATENT UNDER REEXAMINATION
18/527,226	12/01/2023	Ali HASSAN

Title of Invention

CAMERA INITIALIZATION FOR LANE DETECTION AND DISTANCE ESTIMATION USING SINGLE-VIEW GEOMETRY

Electronic terminal disclaimer filed on 09/12/2024

☑ Approved

This patent is subject to a Terminal Disclaimer

Approved / Disapproved by: Electronic Terminal Disclaimer automatically approved

UNITED STATES
PATENT AND TRADEMARK OFFICE

P.O. Box 1450
Alexandria, VA 22313 - 1450
www.uspto.gov

ELECTRONIC ACKNOWLEDGEMENT RECEIPT

APPLICATION #	RECEIPT DATE / TIME	ATTORNEY DOCKET #
18/527,226	**09/12/2024 12:10:39 PM Z ET**	**189908.000302**

Title of Invention

CAMERA INITIALIZATION FOR LANE DETECTION AND DISTANCE ESTIMATION USING SINGLE-VIEW GEOMETRY

Application Information

APPLICATION TYPE	Utility - Nonprovisional Application under 35 USC 111(a)	PATENT #	-
CONFIRMATION #	7088	FILED BY	George Zalepa
PATENT CENTER #	67147451	FILING DATE	12/01/2023
CUSTOMER #	32361	FIRST NAMED INVENTOR	Ali HASSAN
CORRESPONDENCE ADDRESS	-	AUTHORIZED BY	-

Documents

TOTAL DOCUMENTS: 2

DOCUMENT	PAGES	DESCRIPTION	SIZE (KB)
petition-request.pdf	3	Terminal Disclaimer-Filed (Electronic)	44 KB
grantLetter.pdf	1	Terminal Disclaimer-Electronic-Approved	18 KB

Digest

DOCUMENT	MESSAGE DIGEST(SHA-512)
petition-request.pdf	4AF9151BDFD9A72466516AA9CD8418BA0EFC2AE03FF55018 F20E01AEE84137369AC302626430387B0102BE57BA2A390682 4E3BB09AE045AD4C0D5A9E6B71647B

grantLetter.pdf

BAD37F4EB7A8DC430CAFF88261C344AFCE5DA7ED60B5D61
D57D2174F66FE7ECF872C157814F0BFC04555747EC990BD3B
389C0FF18B25107187DFB4CD476697B2

This Acknowledgement Receipt evidences receipt on the noted date by the USPTO of the indicated documents, characterized by the applicant, and including page counts, where applicable. It serves as evidence of receipt similar to a Post Card, as described in MPEP 503.

New Applications Under 35 U.S.C. 111

If a new application is being filed and the application includes the necessary components for filing date (see 37 CFR 1.53(b)-(d) and MPEP 506), a Filing Receipt (37 CFR 1.54) will be issued in due course and the date shown on this Acknowledgement Receipt will establish the filing date of the application

National Stage of an International Application under 35 U.S.C. 371

If a timely submission to enter the national stage of an international application is compliant with the conditions of 35 U.S.C. 371 and other applicable requirements a Form PCT/DO/EO/903 indicating acceptance of the application as a national stage submission under 35 U.S.C. 371 will be issued in addition to the Filing Receipt, in due course.

New International Application Filed with the USPTO as a Receiving Office

If a new international application is being filed and the international application includes the necessary components for an international filing date (see PCT Article 11 and MPEP 1810), a Notification of the International Application Number and of the International Filing Date (Form PCT/RO/105) will be issued in due course, subject to prescriptions concerning national security, and the date shown on this Acknowledgement Receipt will establish the international filing date of the application.

UNITED STATES
PATENT AND TRADEMARK OFFICE

P.O. Box 1450
Alexandria, VA 22313 - 1450
www.uspto.gov

ELECTRONIC PAYMENT RECEIPT

APPLICATION #	RECEIPT DATE / TIME	ATTORNEY DOCKET #
18/527,226	**09/12/2024 12:10:39 PM Z ET**	**189908.000302**

Title of Invention

CAMERA INITIALIZATION FOR LANE DETECTION AND DISTANCE ESTIMATION USING SINGLE-VIEW GEOMETRY

Application Information

APPLICATION TYPE	Utility - Nonprovisional Application under 35 USC 111(a)	PATENT #	-
CONFIRMATION #	7088	FILED BY	George Zalepa
PATENT CENTER #	67147451	AUTHORIZED BY	-
CUSTOMER #	32361	FILING DATE	12/01/2023
CORRESPONDENCE ADDRESS	-	FIRST NAMED INVENTOR	Ali HASSAN

Payment Information

PAYMENT METHOD	PAYMENT TRANSACTION ID	PAYMENT AUTHORIZED BY
DA / 501561	**E20249BC11067605**	**George Zalepa**

PRE-AUTHORIZED ACCOUNT	PRE-AUTHORIZED CATEGORY
501561	**37 CFR 1.16 (National application filing, search, and examination fees); 37 CFR 1.17 (Patent application and reexamination processing fees); 37 CFR 1.19 (Document supply fees); 37 CFR 1.21 (Miscellaneous fees and charges)**

FEE CODE	DESCRIPTION	ITEM PRICE($)	QUANTITY	ITEM TOTAL($)
1814	STATUTORY DISCLAIMER, INCLUDING TERMINAL DISCLAIMER	170.00	1	170.00
			TOTAL AMOUNT:	**$170.00**

This Acknowledgement Receipt evidences receipt on the noted date by the USPTO of the indicated documents, characterized by the applicant, and including page counts, where applicable. It serves as evidence of receipt similar to a Post Card, as described in MPEP 503.

New Applications Under 35 U.S.C. 111

If a new application is being filed and the application includes the necessary components for filing date (see 37 CFR 1.53(b)-(d) and MPEP 506), a Filing Receipt (37 CFR 1.54) will be issued in due course and the date shown on this Acknowledgement Receipt will establish the filing date of the application

National Stage of an International Application under 35 U.S.C. 371

If a timely submission to enter the national stage of an international application is compliant with the conditions of 35 U.S.C. 371 and other applicable requirements a Form PCT/DO/EO/903 indicating acceptance of the application as a national stage submission under 35 U.S.C. 371 will be issued in addition to the Filing Receipt, in due course.

New International Application Filed with the USPTO as a Receiving Office

If a new international application is being filed and the international application includes the necessary components for an international filing date (see PCT Article 11 and MPEP 1810), a Notification of the International Application Number and of the International Filing Date (Form PCT/RO/105) will be issued in due course, subject to prescriptions concerning national security, and the date shown on this Acknowledgement Receipt will establish the international filing date of the application.

UNITED STATES
PATENT AND TRADEMARK OFFICE

P.O. Box 1450
Alexandria, VA 22313 - 1450
www.uspto.gov

TERMINAL DISCLAIMER TO OBVIATE A DOUBLE PATENTING REJECTION OVER A PRIOR PATENT

APPLICATION #	FILING DATE	FIRST NAMED INVENTOR	ATTORNEY DOCKET #
18527226	**12/01/2023**	**Ali HASSAN**	**189908.000302**

Title of Invention

CAMERA INITIALIZATION FOR LANE DETECTION AND DISTANCE ESTIMATION USING SINGLE-VIEW GEOMETRY

☑	Filing of terminal disclaimer does not obviate requirement for response under 37 CFR 1.111 to outstanding Office Action
☑	This electronic Terminal Disclaimer is not being used for a Joint Research Agreement.

Owner	Percent interest
MOTIVE TECHNOLOGIES, INC.	100%
Total	**100%**

The owner(s) of percent interest listed above in the instant application hereby disclaims, except as provided below, the terminal part of the statutory term of any patent granted on the instant application which would extend beyond the expiration date of the full statutory term of any patent granted on pending reference Application Number(s)

Application #	Filing Date

as the term of any patent granted on said reference application may be shortened by any terminal disclaimer filed prior to the grant of any patent on the pending reference application. The owner hereby agrees that any patent so granted on the instant application shall be enforceable only for and during such period that it and any patent granted on the reference application are commonly owned. This agreement runs with any patent granted on the instant application and is binding upon the grantee, its successors or assigns.
In making the above disclaimer, the owner does not disclaim the terminal part of any patent granted on the instant application that would extend to the expiration date of the full statutory term of any patent granted on said reference application, "as the term of any patent granted on said reference application may be shortened by any terminal disclaimer filed prior to the grant of any patent on the pending reference application," in the event that any such patent granted on the pending reference application: expires for failure to pay a maintenance fee, is held unenforceable, is found invalid by a court of competent jurisdiction, is statutorily disclaimed in whole or terminally disclaimed under 37 CFR 1.321, has all claims canceled by a reexamination certificate, is reissued, or is in any manner terminated prior to the expiration of its full statutory term as shortened by any terminal disclaimer filed prior to its grant.

The owner(s) of percent interest listed above in the instant application hereby disclaims, except as provided below, the terminal part of the statutory term of any patent granted on the instant application which would extend beyond the expiration date of the full statutory term of prior patent number(s)

Patent #
11875580

as the term of said prior patent is presently shortened by any terminal disclaimer. The owner hereby agrees that any patent so granted on the instant application shall be enforceable only for and during such period that it and the prior patent are commonly owned. This agreement runs with any patent granted on the instant application and is binding upon the grantee, its successors or assigns.
In making the above disclaimer, the owner does not disclaim the terminal part of the term of any patent granted on the instant application that would extend to the expiration date of the full statutory term of the prior patent, "as the term of said prior patent is presently shortened by any terminal disclaimer," in the event that said prior patent later:
- expires for failure to pay a maintenance fee;
- is held unenforceable;
- is found invalid by a court of competent jurisdiction;
- is statutorily disclaimed in whole or terminally disclaimed under 37 CFR 1.321;
- has all claims canceled by a reexamination certificate;
- is reissued; or
- is in any manner terminated prior to the expiration of its full statutory term as presently shortened by any terminal disclaimer.

Terminal disclaimer fee under 37 CFR 1.20(d) included with Electronic Terminal Disclaimer request.

Applicant claims the following entity status:
Regular Undiscounted

I hereby declare that all statements made herein of my own knowledge are true and that all statemnts made on information and belief are believed to be true; and further that these statements were made with the knowledge that willful false statements and the like so made are punishable by fine or imprisonment, or both, under Section 1001 of Title 18 of the United States Code and that such willful false statements may jeopardize the validity of the application or any patent issued thereon.

I certify, in accordance with 37 CFR 1.4(d)(4) that I am: An attorney or agent registered to practice before the Patent and Trademark Office who is of record in this application

Signature	Name	Registration #
/George Zalepa/	George Zalepa	72706

---

* Statement under 37 CFR 3.73(b) is required if terminal disclaimer is signed by the assignee (owner). Form PTO/SB/96 may be used for making this certification. See MPEP 324.

Doc Code: ECOMM.AUTH/ECOMM.WTDW
Doc Description: Internet Communications Authorization/Internet Communications Authorization Withdrawal

PTO/SB/439 (11-15)

AUTHORIZATION FOR INTERNET COMMUNICATIONS IN A PATENT APPLICATION OR REQUEST TO WITHDRAW AUTHORIZATION FOR INTERNET COMMUNICATIONS		
	Application No.	18/527,226
	Filing Date	December 1, 2023
	First Named Inventor	Ali HASSAN
	Art Unit	2488
	Examiner Name	HOWARD D BROWN JR
	Practitioner Docket No.	189908.000302

To: Commissioner for Patents
P.O. Box 1450
Alexandria, VA 22313-1450

I. To authorize permission for Internet Communications.

☒ Recognizing that Internet communications are not secure, I hereby authorize the USPTO to communicate with the undersigned and practitioners in accordance with 37 CFR 1.33 and 37 CFR 1.34 concerning any subject matter of this application via video conferencing, instant messaging, or electronic mail. I understand that a copy of these communications will be made of record in the application file. (MPEP 502.03)

II. To withdraw authorization for Internet Communications.

☐ The authorization given on _____, to the USPTO to communicate with the undersigned and any practitioner in accordance with 37 CFR 1.33 and 37 CFR 1.34 concerning any subject matter of this application via Internet communications such as video conferencing, instant messaging, or electronic mail is hereby withdrawn. I understand that the withdrawal is effective when approved rather than when received.

I am the

☐ applicant.

☒ attorney or agent of record. Registration number 72,706.

☐ attorney or agent acting under 37 CFR 1.34. Registration number _____.

/George Zalepa/ — Signature

September 20, 2024 — Date

George Zalepa — Typed or printed name

973-443-3241 — Telephone Number

NOTE: This form must be signed in accordance with 37 CFR 1.33. See 37 CFR 1.4 for signature requirements and certifications. Juristic entities must be represented by a patent practitioner (see 37 CFR 1.31, which is applicable to any paper filed on or after September 16, 2012, that is presented on behalf of a juristic entity, regardless of application filing date). Submit multiple forms if more than one signature is required, see below*.

☒ * Total of 1 forms are submitted.

Privacy Act Statement

The **Privacy Act of 1974 (P.L. 93-579)** requires that you be given certain information in connection with your submission of the attached form related to a patent application or patent. Accordingly, pursuant to the requirements of the Act, please be advised that: (1) the general authority for the collection of this information is 35 U.S.C. 2(b)(2); (2) furnishing of the information solicited is voluntary; and (3) the principal purpose for which the information is used by the U.S. Patent and Trademark Office is to process and/or examine your submission related to a patent application or patent. If you do not furnish the requested information, the U.S. Patent and Trademark Office may not be able to process and/or examine your submission, which may result in termination of proceedings or abandonment of the application or expiration of the patent.

The information provided by you in this form will be subject to the following routine uses:

1. The information on this form will be treated confidentially to the extent allowed under the Freedom of Information Act (5 U.S.C. 552) and the Privacy Act (5 U.S.C 552a). Records from this system of records may be disclosed to the Department of Justice to determine whether disclosure of these records is required by the Freedom of Information Act.
2. A record from this system of records may be disclosed, as a routine use, in the course of presenting evidence to a court, magistrate, or administrative tribunal, including disclosures to opposing counsel in the course of settlement negotiations.
3. A record in this system of records may be disclosed, as a routine use, to a Member of Congress submitting a request involving an individual, to whom the record pertains, when the individual has requested assistance from the Member with respect to the subject matter of the record.
4. A record in this system of records may be disclosed, as a routine use, to a contractor of the Agency having need for the information in order to perform a contract. Recipients of information shall be required to comply with the requirements of the Privacy Act of 1974, as amended, pursuant to 5 U.S.C. 552a(m).
5. A record related to an International Application filed under the Patent Cooperation Treaty in this system of records may be disclosed, as a routine use, to the International Bureau of the World Intellectual Property Organization, pursuant to the Patent Cooperation Treaty.
6. A record in this system of records may be disclosed, as a routine use, to another federal agency for purposes of National Security review (35 U.S.C. 181) and for review pursuant to the Atomic Energy Act (42 U.S.C. 218(c)).
7. A record from this system of records may be disclosed, as a routine use, to the Administrator, General Services, or his/her designee, during an inspection of records conducted by GSA as part of that agency's responsibility to recommend improvements in records management practices and programs, under authority of 44 U.S.C. 2904 and 2906. Such disclosure shall be made in accordance with the GSA regulations governing inspection of records for this purpose, and any other relevant (*i.e.*, GSA or Commerce) directive. Such disclosure shall not be used to make determinations about individuals.
8. A record from this system of records may be disclosed, as a routine use, to the public after either publication of the application pursuant to 35 U.S.C. 122(b) or issuance of a patent pursuant to 35 U.S.C. 151. Further, a record may be disclosed, subject to the limitations of 37 CFR 1.14, as a routine use, to the public if the record was filed in an application which became abandoned or in which the proceedings were terminated and which application is referenced by either a published application, an application open to public inspection or an issued patent.
9. A record from this system of records may be disclosed, as a routine use, to a Federal, State, or local law enforcement agency, if the USPTO becomes aware of a violation or potential violation of law or regulation.

UNITED STATES
PATENT AND TRADEMARK OFFICE

P.O. Box 1450
Alexandria, VA 22313 - 1450
www.uspto.gov

ELECTRONIC ACKNOWLEDGEMENT RECEIPT

APPLICATION #	RECEIPT DATE / TIME	ATTORNEY DOCKET #
18/527,226	**09/20/2024 02:14:04 PM Z ET**	**189908.000302**

Title of Invention

CAMERA INITIALIZATION FOR LANE DETECTION AND DISTANCE ESTIMATION USING SINGLE-VIEW GEOMETRY

Application Information

APPLICATION TYPE	Utility - Nonprovisional Application under 35 USC 111(a)	PATENT #	-
CONFIRMATION #	7088	FILED BY	Judi Cordo
PATENT CENTER #	67259448	FILING DATE	12/01/2023
CUSTOMER #	32361	FIRST NAMED INVENTOR	Ali HASSAN
CORRESPONDENCE ADDRESS	-	AUTHORIZED BY	George Zalepa

Documents

TOTAL DOCUMENTS: 1

DOCUMENT	PAGES	DESCRIPTION	SIZE (KB)
189908_000302_authorization_for_internet_communication.pdf	2	Internet Communications Authorization	182 KB

Digest

DOCUMENT	MESSAGE DIGEST(SHA-512)
189908_000302_authorization_for_internet_communication.pdf	8D99FAADAE46170F768E9F594E7310DD90D3778760431762FB3D196E79AD9DD44E72989C8D932C62FD20F926C9DBD62FFB5614DEDA894F3FA0CAC3C1DD9E6518

This Acknowledgement Receipt evidences receipt on the noted date by the USPTO of the indicated documents, characterized by the applicant, and including page counts, where applicable. It serves as evidence of receipt similar to a Post Card, as

described in MPEP 503.

New Applications Under 35 U.S.C. 111

If a new application is being filed and the application includes the necessary components for filing date (see 37 CFR 1.53(b)-(d) and MPEP 506), a Filing Receipt (37 CFR 1.54) will be issued in due course and the date shown on this Acknowledgement Receipt will establish the filing date of the application

National Stage of an International Application under 35 U.S.C. 371

If a timely submission to enter the national stage of an international application is compliant with the conditions of 35 U.S.C. 371 and other applicable requirements a Form PCT/DO/EO/903 indicating acceptance of the application as a national stage submission under 35 U.S.C. 371 will be issued in addition to the Filing Receipt, in due course.

New International Application Filed with the USPTO as a Receiving Office

If a new international application is being filed and the international application includes the necessary components for an international filing date (see PCT Article 11 and MPEP 1810), a Notification of the International Application Number and of the International Filing Date (Form PCT/RO/105) will be issued in due course, subject to prescriptions concerning national security, and the date shown on this Acknowledgement Receipt will establish the international filing date of the application.

Notice of References Cited	Application/Control No. 18/527,226	Applicant(s)/Patent Under Reexamination HASSAN et al.	
	Examiner HOWARD D BROWN JR	Art Unit 2488	Page 1 of 1

U.S. PATENT DOCUMENTS

*		Document Number Country Code-Number-Kind Code	Date YYYY-MM-DD	Name	CPC Classification	US Classification
*	A	US-20190102674-A1	2019-04-04	KWANT; Richard	G06F16/215	1/1
*	B	US-11205284-B2	2021-12-21	Dai; Xing	G06T7/80	1/1
*	C	US-20220105947-A1	2022-04-07	POSTNIKOV; Mikhail Mikhailovich	G06V20/588	1/1
*	D	US-20190034740-A1	2019-01-31	KWANT; Richard	G06V10/462	1/1
*	E	US-20200357138-A1	2020-11-12	Xiang; Jie	H04N23/54	1/1
*	F	US-20180262678-A1	2018-09-13	HUNT; Shawn	H04N23/80	1/1
*	G	US-20150177370-A1	2015-06-25	TRUMMER; Michael	G01S7/51	356/5.01
	H					
	I					
	J					
	K					
	L					
	M					

FOREIGN PATENT DOCUMENTS

*		Document Number Country Code-Number-Kind Code	Date YYYY-MM-DD	Country	Name	CPC Classification
	N					
	O					
	P					
	Q					
	R					
	S					
	T					

NON-PATENT DOCUMENTS

*		Include as applicable: Author, Title Date, Publisher, Edition or Volume, Pertinent Pages)
	U	
	V	
	W	
	X	

*A copy of this reference is not being furnished with this Office action. (See MPEP § 707.05(a).)
Dates in YYYY-MM-DD format are publication dates. Classifications may be US or foreign.

Search Notes	Application/Control No.	Applicant(s)/Patent Under Reexamination
	18/527,226	HASSAN et al.
	Examiner	Art Unit
	HOWARD D BROWN JR	2488

CPC - Searched*		
Symbol	**Date**	**Examiner**
(G06V20/588	09/19/2024	HB
G06F18/214	09/19/2024	HB
G06N3/044	09/19/2024	HB
G06T7/50	09/19/2024	HB
G06T7/75	09/19/2024	HB
G06T2207/30256	09/19/2024	HB
G06N3/0442	09/19/2024	HB
G06N3/045	09/19/2024	HB
G06N3/0464	09/19/2024	HB
G06N3/084	09/19/2024	HB
G06N3/09	09/19/2024	HB
G06V10/82	09/19/2024	HB

CPC Combination Sets - Searched*		
Symbol	**Date**	**Examiner**

US Classification - Searched*			
Class	**Subclass**	**Date**	**Examiner**

* See search history printout included with this form or the SEARCH NOTES box below to determine the scope of the search.

/HOWARD D BROWN JR/ Examiner, Art Unit 2488	

Search Notes	Application/Control No.	Applicant(s)/Patent Under Reexamination
	18/527,226	HASSAN et al.
	Examiner	**Art Unit**
	HOWARD D BROWN JR	2488

Search Notes		
Search Notes	**Date**	**Examiner**
Search Strategy: US-PGPUB, USPAT, USOCR, JPO, EPO, DERWENT including keywords, class/subclass, inventor, assignee	09/19/2024	HB

Interference Search			
US Class/CPC Symbol	**US Subclass/CPC Group**	**Date**	**Examiner**
G06N	3/08	09/19/2024	HB

/HOWARD D BROWN JR/ Examiner, Art Unit 2488	

Issue Classification	Application/Control No.	Applicant(s)/Patent Under Reexamination
	18/527,226	HASSAN et al.
	Examiner	**Art Unit**
	HOWARD D BROWN JR	2488

CPC						
Symbol					**Type**	**Version**
G06V	/	20	/	588	F	2022-01-01
G06T	/	7	/	75	I	2017-01-01
G06T	/	7	/	50	I	2017-01-01
G06F	/	18	/	214	I	2023-01-01
G06N	/	3	/	044	I	2023-01-01
G06T	/	2207	/	30256	A	2013-01-01

CPC Combination Sets							
Symbol					**Type**	**Set**	**Ranking**	**Version**
	/		/					

Use images from artifact folder? (•) Yes ( ) No

NONE		**Total Claims Allowed:**	
(Assistant Examiner)	(Date)	20	
/HOWARD D BROWN JR/ Examiner, Art Unit 2488	19 September 2024	O.G. Print Claim(s)	O.G. Print Figure
(Primary Examiner)	(Date)	1	1

Issue Classification	Application/Control No.	Applicant(s)/Patent Under Reexamination
	18/527,226	HASSAN et al.
	Examiner	**Art Unit**
	HOWARD D BROWN JR	2488

INTERNATIONAL CLASSIFICATION					
CLAIMED					
G06N	/	3	/	08	

NON-CLAIMED					
	/		/		

US ORIGINAL CLASSIFICATION	
CLASS	**SUBCLASS**

CROSS REFERENCE(S)						
CLASS	**SUBCLASS (ONE SUBCLASS PER BLOCK)**					

Use images from artifact folder? (•) Yes ( ) No

NONE (Assistant Examiner)	(Date)	**Total Claims Allowed:** 20	
/HOWARD D BROWN JR/ Examiner, Art Unit 2488 (Primary Examiner)	19 September 2024 (Date)	O.G. Print Claim(s) 1	O.G. Print Figure 1

Issue Classification	Application/Control No.	Applicant(s)/Patent Under Reexamination
	18/527,226	HASSAN et al.
	Examiner	**Art Unit**
	HOWARD D BROWN JR	2488

☐ Claims renumbered in the same order as presented by applicant ☐ CPA ☑ T.D. ☐ R.1.47

CLAIMS

Final	Original	Final	Original	Final	Original	Final	Original	Final	Original	Final	Original	Final	Original	Final	Original
	1		10		19	8	28	17	37						
	2		11		20	9	29	18	38						
	3		12	1	21	10	30	19	39						
	4		13	2	22	11	31	20	40						
	5		14	3	23	12	32								
	6		15	4	24	13	33								
	7		16	5	25	14	34								
	8		17	6	26	15	35								
	9		18	7	27	16	36								

Use images from artifact folder? ◉ Yes ○ No

NONE		**Total Claims Allowed:**
(Assistant Examiner)	(Date)	20
/HOWARD D BROWN JR/ Examiner, Art Unit 2488	19 September 2024	O.G. Print Claim(s): 1 / O.G. Print Figure: 1
(Primary Examiner)	(Date)	

Index of Claims	Application/Control No.	Applicant(s)/Patent Under Reexamination
	18/527,226	HASSAN et al.
	Examiner	Art Unit
	HOWARD D BROWN JR	2488

✓	Rejected	-	Cancelled	N	Non-Elected	A	Appeal
=	Allowed	÷	Restricted	I	Interference	O	Objected

CLAIMS

☐ Claims renumbered in the same order as presented by applicant ☐ CPA ☑ T.D. ☐ R.1.47

CLAIM		DATE								
Final	Original	06/07/2024	09/19/2024							
	1	-	-							
	2	-	-							
	3	-	-							
	4	-	-							
	5	-	-							
	6	-	-							
	7	-	-							
	8	-	-							
	9	-	-							
	10	-	-							
	11	-	-							
	12	-	-							
	13	-	-							
	14	-	-							
	15	-	-							
	16	-	-							
	17	-	-							
	18	-	-							
	19	-	-							
	20	-	-							
1	21	✓	=							
2	22	✓	=							
3	23	✓	=							
4	24	✓	=							
5	25	✓	=							
6	26	✓	=							
7	27	✓	=							
8	28	✓	=							
9	29	✓	=							
10	30	✓	=							
11	31	✓	=							
12	32	✓	=							
13	33	✓	=							
14	34	✓	=							
15	35	✓	=							
16	36	✓	=							
17	37	✓	=							
18	38	✓	=							
19	39	✓	=							
20	40	✓	=							

PE2E SEARCH - Search History (Prior Art)

Ref #	Hits	Search Query	DBs	Default Operator	Plurals	British Equivalents	Time Stamp
L1	1	"17493011"	(US-PGPUB; USPAT; USOCR; FIT (CN, FR, WO); FPRS; EPO; JPO; DERWENT; IBM_TDB)	OR	ON	ON	2023/09/06 07:04 AM
L2	40	((("MOTIVE") near3 ("TECHNOLOGIES") near3 ("INC"))).AS,AANM.	(USPAT)	OR	ON	ON	2023/09/06 07:44 AM
L3	1065	((("HASSAN") near3 ("Ali")) OR (("ALI") near3 ("Ahmed")) OR (("KAZMI") near3 ("Syed") near3 ("Wajahat") near3 ("Ali"))).INV.	(US-PGPUB; USPAT; USOCR; EPO; JPO; DERWENT)	OR	ON	ON	2023/09/06 07:44 AM
L4	3	("20190009166" OR "20210009166" OR "20210049780").pn.	(US-PGPUB; USPAT)	OR	ON	ON	2023/09/06 07:46 AM
L5	88562	(G06V20/588 OR G06F18/214 OR G06N3/044 OR G06T7/50 OR G06T7/75 OR G06T2207/30256 OR G06N3/0442 OR G06N3/045 OR G06N3/0464 OR G06N3/084 OR G06N3/09 OR G06V10/82).cpc.	(US-PGPUB; USPAT)	OR	ON	ON	2023/09/06 07:47 AM
L6	587992	(G06V20/588 OR G06F18/214 OR G06N3/044 OR G06T7/50 OR G06T7/75 OR G06T2207/30256 OR G06N3/0442 OR G06N3/045 OR G06N3/0464 OR G06N3/084 OR G06N3/09 OR G06V10/82).cpc.	(US-PGPUB; USPAT; USOCR; FIT (CN, FR, WO); FPRS; EPO; JPO; DERWENT; IBM_TDB)	OR	ON	ON	2023/09/06 07:48 AM
L7	540505	(Road OR street WITH lane WITH line WITH bondar$3) SAME (detect$3)	(US-PGPUB; USPAT; USOCR; FIT (CN, FR, WO); FPRS; EPO; JPO; DERWENT; IBM_TDB)	OR	ON	ON	2023/09/06 07:57 AM
L8	1856	(Road OR street WITH lane WITH line WITH	(US-PGPUB; USPAT; USOCR; FIT (CN, FR,	OR	ON	ON	2023/09/06 07:59 AM

		bondar$3) SAME (detect$3) AND (horizon WITH line)	WO); FPRS; EPO; JPO; DERWENT; IBM_TDB)				
L9	466	(Road OR street WITH lane WITH line WITH bondar$3) SAME (detect$3) SAME (horizon WITH line)	(US-PGPUB; USPAT; USOCR; FIT (CN, FR, WO); FPRS; EPO; JPO; DERWENT; IBM_TDB)	OR	ON	ON	2023/09/06 08:00 AM
L10	169	5 AND (Road OR street WITH lane WITH line WITH bondar$3) SAME (detect$3) SAME (horizon WITH line)	(US-PGPUB; USPAT; USOCR; FIT (CN, FR, WO); FPRS; EPO; JPO; DERWENT; IBM_TDB)	OR	ON	ON	2023/09/06 08:01 AM
L11	443	5 AND (Road OR street WITH lane WITH line) SAME (horizon WITH line)	(US-PGPUB; USPAT; USOCR; FIT (CN, FR, WO); FPRS; EPO; JPO; DERWENT; IBM_TDB)	OR	ON	ON	2023/09/06 08:03 AM
L12	1693	(Road OR street WITH lane WITH line) SAME (horizon WITH line)	(US-PGPUB; USPAT; USOCR; FIT (CN, FR, WO); FPRS; EPO; JPO; DERWENT; IBM_TDB)	OR	ON	ON	2023/09/06 08:03 AM
L13	30	12 AND (Lane WITH mark$3) WITH (Horizon ADJ line)	(US-PGPUB; USPAT; USOCR; FIT (CN, FR, WO); FPRS; EPO; JPO; DERWENT; IBM_TDB)	OR	ON	ON	2023/09/06 08:04 AM
L14	2	12 AND (Lane WITH mark$3) WITH (Horizon ADJ line) SAME (predict$3 OR forecast$3)	(US-PGPUB; USPAT; USOCR; FIT (CN, FR, WO); FPRS; EPO; JPO; DERWENT; IBM_TDB)	OR	ON	ON	2023/09/06 01:56 PM
L15	2	(Lane ADJ line) WITH (mark$3) WITH (Horizon ADJ line) SAME (predict$3)	(US-PGPUB; USPAT; USOCR; FIT (CN, FR, WO); FPRS; EPO; JPO; DERWENT; IBM_TDB)	OR	ON	ON	2023/09/06 02:03 PM
L16	4	(Lane ADJ line) SAME (Horizon ADJ line) SAME (predict$3)	(US-PGPUB; USPAT; USOCR; FIT (CN, FR, WO); FPRS; EPO; JPO; DERWENT; IBM_TDB)	OR	ON	ON	2023/09/06 02:04 PM
L17	57	(Road OR street WITH lane WITH line WITH bondar$3) SAME (detect$3) AND (horizon WITH line) SAME network	(US-PGPUB; USPAT; USOCR; FIT (CN, FR, WO); FPRS; EPO; JPO; DERWENT; IBM_TDB)	OR	ON	ON	2023/09/11 12:31 PM
L18	28	(Road OR street WITH lane WITH line WITH bondar$3) SAME (detect$3) AND (horizon WITH line)	(US-PGPUB; USPAT)	OR	ON	ON	2023/09/11 12:37 PM

		SAME network					
L19	28	(Road OR street WITH lane WITH line WITH bondar$3) SAME (detect$3) AND (horizon WITH line) SAME (network)	(US-PGPUB; USPAT)	OR	ON	ON	2023/09/11 12:44 PM
L20	6	(Road OR street WITH lane WITH line WITH bondar$3) SAME (detect$3) AND (horizon WITH line) SAME (network WITH receiv$3)	(US-PGPUB; USPAT)	OR	ON	ON	2023/09/11 12:56 PM
L21	869	(Road OR street WITH lane WITH line WITH bondar$3) SAME (detect$3) AND (horizon WITH line) SAME (network WITH receiv$3 WITH ccd OR camera OR imag$3)	(US-PGPUB; USPAT)	OR	ON	ON	2023/09/12 10:40 AM
L22	869	(Road OR street WITH lane WITH line WITH bondar$3) SAME (detect$3) AND (horizon WITH line) SAME (network near2 receiv$3 WITH ccd OR camera OR imag$3)	(US-PGPUB; USPAT)	OR	ON	ON	2023/09/12 10:41 AM
L23	452	(Road OR street WITH lane WITH line WITH bondar$3) SAME (detect$3) AND (horizon WITH line) SAME (network near2 receiv$3 WITH ccd OR camera)	(US-PGPUB; USPAT)	OR	ON	ON	2023/09/12 10:41 AM
L24	1	(Road OR street WITH lane WITH line WITH bondar$3) SAME (detect$3) AND (horizon WITH line) SAME (network near2 receiv$3 WITH camera)	(US-PGPUB; USPAT)	OR	ON	ON	2023/09/12 10:41 AM
L25	1	(Road OR street WITH lane WITH line WITH bondar$3) SAME (detect$3) AND (horizon WITH line) SAME (network WITH receiv$3 WITH camera)	(US-PGPUB; USPAT)	OR	ON	ON	2023/09/12 10:42 AM
L26	2596	5 AND (network WITH receiv$3 WITH camera)	(US-PGPUB; USPAT)	OR	ON	ON	2023/09/12 12:04 PM
L27	0	(Road OR street WITH	(US-PGPUB; USPAT)	OR	ON	ON	2023/09/12

		lane WITH line WITH bondar$3) SAME (horizon WITH line) SAME (network WITH receiv$3 WITH camera)					12:05 PM
L28	0	(Road OR street WITH lane ADJ line) SAME (horizon WITH line) SAME (boundary) SAME (network WITH receiv$3 WITH camera)	(US-PGPUB; USPAT)	OR	ON	ON	2023/09/12 12:13 PM
L29	0	(Road OR street WITH lane ADJ line) SAME (horizon WITH line) SAME (network WITH receiv$3 WITH camera)	(US-PGPUB; USPAT)	OR	ON	ON	2023/09/12 12:13 PM
L30	850	(Road OR street WITH lane ADJ line) SAME (network WITH receiv$3 WITH camera)	(US-PGPUB; USPAT)	OR	ON	ON	2023/09/12 12:13 PM
L31	477	(Road OR street WITH lane ADJ line) SAME (network WITH receiv$3 WITH camera WITH imag$3)	(US-PGPUB; USPAT)	OR	ON	ON	2023/09/12 12:13 PM
L32	133	5 AND (Road OR street WITH lane ADJ line) SAME (network WITH receiv$3 WITH camera WITH imag$3)	(US-PGPUB; USPAT)	OR	ON	ON	2023/09/12 12:14 PM
L33	0	5 AND (Road OR street WITH lane ADJ line) SAME (network WITH receiv$3 WITH camera WITH imag$3) AND (horizion ADJ Line)	(US-PGPUB; USPAT)	OR	ON	ON	2023/09/12 12:14 PM
L34	9	5 AND (Road OR street WITH lane ADJ line) SAME (network WITH receiv$3 WITH camera WITH imag$3) AND (horizon ADJ Line)	(US-PGPUB; USPAT)	OR	ON	ON	2023/09/12 12:15 PM
L35	0	5 AND (Road OR street WITH lane ADJ line) SAME (network WITH receiv$3 WITH camera WITH imag$3) SAME (horizon ADJ Line)	(US-PGPUB; USPAT)	OR	ON	ON	2023/09/12 12:15 PM
L36	0	(Road OR street WITH lane ADJ line) SAME (network WITH receiv$3 WITH camera WITH imag$3) SAME (horizon ADJ Line)	(US-PGPUB; USPAT)	OR	ON	ON	2023/09/12 12:15 PM

L37	0	31 AND annotat	(US-PGPUB; USPAT)	OR	ON	ON	2023/09/12 03:20 PM
L38	22	31 AND (annotat$3 WITH accuracy)	(US-PGPUB; USPAT)	OR	ON	ON	2023/09/12 03:20 PM
L39	18	32 AND (annotat$3 WITH accuracy)	(US-PGPUB; USPAT)	OR	ON	ON	2023/09/12 03:21 PM
L40	0	32 AND (annotat$3 WITH accuracy WITH lines)	(US-PGPUB; USPAT)	OR	ON	ON	2023/09/12 03:24 PM
L41	0	32 AND (annotat$3 WITH accuracy WITH line)	(US-PGPUB; USPAT)	OR	ON	ON	2023/09/12 03:24 PM
L42	0	32 AND (annotat$3 WITH accuracy WITH land)	(US-PGPUB; USPAT)	OR	ON	ON	2023/09/12 03:24 PM
L43	0	32 AND (annotat$3 WITH accuracy WITH lane)	(US-PGPUB; USPAT)	OR	ON	ON	2023/09/12 03:24 PM
L44	18	32 AND (annotat$3 WITH accuracy)	(US-PGPUB; USPAT)	OR	ON	ON	2023/09/12 03:24 PM
L45	0	(predict$3 WITH horizion ADJ line)	(US-PGPUB; USPAT; USOCR; FIT (CN, FR, WO); FPRS; EPO; JPO; DERWENT; IBM_TDB)	OR	ON	ON	2023/11/18 09:31 AM
L46	53	(predict$3 WITH horizon ADJ line)	(US-PGPUB; USPAT; USOCR; FIT (CN, FR, WO); FPRS; EPO; JPO; DERWENT; IBM_TDB)	OR	ON	ON	2023/11/18 09:31 AM
L47	18	(predict$3) SAME (detect$3 WITH horizon ADJ line)	(US-PGPUB; USPAT; USOCR; FIT (CN, FR, WO); FPRS; EPO; JPO; DERWENT; IBM_TDB)	OR	ON	ON	2023/11/18 09:32 AM
L48	346	(detect$3 WITH horizon ADJ line) WITH (imag$3)	(US-PGPUB; USPAT; USOCR; FIT (CN, FR, WO); FPRS; EPO; JPO; DERWENT; IBM_TDB)	OR	ON	ON	2023/11/18 09:42 AM
L49	3220	(camera WITH parameter) SAME (Line near2 detect$3)	(US-PGPUB; USPAT; USOCR; FIT (CN, FR, WO); FPRS; EPO; JPO; DERWENT; IBM_TDB)	OR	ON	ON	2023/11/18 09:44 AM
L50	2061	(camera WITH parameter) WITH (Line near2 detect$3)	(US-PGPUB; USPAT; USOCR; FIT (CN, FR, WO); FPRS; EPO; JPO; DERWENT; IBM_TDB)	OR	ON	ON	2023/11/18 09:44 AM
L51	36426	(camera ccd WITH parameter) WITH (Line near2 detect$3)	(US-PGPUB; USPAT; USOCR; FIT (CN, FR, WO); FPRS; EPO;	OR	ON	ON	2023/11/18 09:45 AM

			JPO; DERWENT; IBM_TDB)				
L52	36326	(camera ccd near2 parameter) WITH (Line near2 detect$3)	(US-PGPUB; USPAT; USOCR; FIT (CN, FR, WO); FPRS; EPO; JPO; DERWENT; IBM_TDB)	OR	ON	ON	2023/11/18 09:45 AM
L53	46	(camera ccd near2 parameter) WITH (Line near2 detect$3) AND 48	(US-PGPUB; USPAT; USOCR; FIT (CN, FR, WO); FPRS; EPO; JPO; DERWENT; IBM_TDB)	OR	ON	ON	2023/11/18 09:45 AM
L54	53	(predict$3) WITH (horizon ADJ line)	(US-PGPUB; USPAT; USOCR; FIT (CN, FR, WO); FPRS; EPO; JPO; DERWENT; IBM_TDB)	OR	ON	ON	2023/11/18 02:40 PM
L55	36326	(camera ccd near2 parameter) WITH (Line near2 detect$3)	(US-PGPUB; USPAT; USOCR; FIT (CN, FR, WO); FPRS; EPO; JPO; DERWENT; IBM_TDB)	OR	ON	ON	2023/11/18 02:40 PM
L56	3	55 AND 54	(US-PGPUB; USPAT; USOCR; FIT (CN, FR, WO); FPRS; EPO; JPO; DERWENT; IBM_TDB)	OR	ON	ON	2023/11/18 02:41 PM
L57	50974	(camera ccd near2 parameter) SAME (Line near2 detect$3)	(US-PGPUB; USPAT; USOCR; FIT (CN, FR, WO); FPRS; EPO; JPO; DERWENT; IBM_TDB)	OR	ON	ON	2023/11/18 02:41 PM
L58	16	(predict$3) WITH (horizon ADJ line)	(US-PGPUB; USPAT; IBM_TDB)	OR	ON	ON	2023/11/18 02:44 PM
L59	43	(horizon ADJ line) SAME (lane ADJ line)	(US-PGPUB; USPAT; IBM_TDB)	OR	ON	ON	2023/11/18 06:28 PM
L60	59	(horizon ADJ line) SAME (lane ADJ line)	(US-PGPUB; USPAT; USOCR; FIT (CN, FR, WO); FPRS; EPO; JPO; DERWENT; IBM_TDB)	OR	ON	ON	2023/11/18 06:28 PM
L61	53	(horizon ADJ line) SAME (lane ADJ line) SAME (markers OR points)	(US-PGPUB; USPAT; USOCR; FIT (CN, FR, WO); FPRS; EPO; JPO; DERWENT; IBM_TDB)	OR	ON	ON	2023/11/18 06:31 PM
L62	14	("11205284" OR "20150177370" OR "20170177951" OR "20180046867" OR "20180262678" OR "20190009166" OR "20190034740" OR "20190102674" OR	(US-PGPUB; USPAT)	OR	ON	ON	2024/06/06 07:31 PM

		"20190205667" OR "20200357138" OR "20210009166" OR "20210049780" OR "20220105947" OR "20230106961").pn.					
L63	9	"11875580"	(US-PGPUB; USPAT; USOCR; FIT (CN, FR, WO); FPRS; EPO; JPO; DERWENT; IBM_TDB)	OR	ON	ON	2024/06/06 07:34 PM
L64	1	"18527226"	(US-PGPUB; USPAT; USOCR; FIT (CN, FR, WO); FPRS; EPO; JPO; DERWENT; IBM_TDB)	OR	ON	ON	2024/06/06 08:08 PM

PE2E SEARCH - Search History (Interference)

Ref #	Hits	Search Query	DBs	Default Operator	Plurals	British Equivalents	Time Stamp
N1	42	(horizon ADJ line) SAME (lane ADJ line) SAME (markers OR points)	(US-PGPUB; USPAT)	OR	ON	ON	2023/11/18 06:36 PM
N2	211	(camera WITH parameter) WITH (Line near2 detect$3)	(US-PGPUB; USPAT)	OR	ON	ON	2023/11/18 06:36 PM
N3	1	N2 AND N1	(US-PGPUB; USPAT)	OR	ON	ON	2023/11/18 06:39 PM

UNITED STATES PATENT AND TRADEMARK OFFICE

UNITED STATES DEPARTMENT OF COMMERCE
United States Patent and Trademark Office
Address: COMMISSIONER FOR PATENTS
P.O. Box 1450
Alexandria, Virginia 22313-1450
www.uspto.gov

NOTICE OF ALLOWANCE AND FEE(S) DUE

32361 7590 09/30/2024
GREENBERG TRAURIG (NY)
One Vanderbilt Avenue
NEW YORK, NY 10017

EXAMINER
BROWN JR, HOWARD D

ART UNIT	PAPER NUMBER
2488	

DATE MAILED: 09/30/2024

APPLICATION NO.	FILING DATE	FIRST NAMED INVENTOR	ATTORNEY DOCKET NO.	CONFIRMATION NO.
18/527,226	12/01/2023	Ali HASSAN	189908.000302	7088

TITLE OF INVENTION: CAMERA INITIALIZATION FOR LANE DETECTION AND DISTANCE ESTIMATION USING SINGLE-VIEW GEOMETRY

APPLN. TYPE	ENTITY STATUS	ISSUE FEE DUE	PUBLICATION FEE DUE	PREV. PAID ISSUE FEE	TOTAL FEE(S) DUE	DATE DUE
nonprovisional	UNDISCOUNTED	$1200	$0.00	$0.00	$1200	12/30/2024

THE APPLICATION IDENTIFIED ABOVE HAS BEEN EXAMINED AND IS ALLOWED FOR ISSUANCE AS A PATENT. PROSECUTION ON THE MERITS IS CLOSED. THIS NOTICE OF ALLOWANCE IS NOT A GRANT OF PATENT RIGHTS. THIS APPLICATION IS SUBJECT TO WITHDRAWAL FROM ISSUE AT THE INITIATIVE OF THE OFFICE OR UPON PETITION BY THE APPLICANT. SEE 37 CFR 1.313 AND MPEP 1308.

THE ISSUE FEE AND PUBLICATION FEE (IF REQUIRED) MUST BE PAID WITHIN THREE MONTHS FROM THE MAILING DATE OF THIS NOTICE OR THIS APPLICATION SHALL BE REGARDED AS ABANDONED. THIS STATUTORY PERIOD CANNOT BE EXTENDED. SEE 35 U.S.C. 151. THE ISSUE FEE DUE INDICATED ABOVE DOES NOT REFLECT A CREDIT FOR ANY PREVIOUSLY PAID ISSUE FEE IN THIS APPLICATION. IF AN ISSUE FEE HAS PREVIOUSLY BEEN PAID IN THIS APPLICATION (AS SHOWN ABOVE), THE RETURN OF PART B OF THIS FORM WILL BE CONSIDERED A REQUEST TO REAPPLY THE PREVIOUSLY PAID ISSUE FEE TOWARD THE ISSUE FEE NOW DUE.

HOW TO REPLY TO THIS NOTICE:

I. Review the ENTITY STATUS shown above. If the ENTITY STATUS is shown as SMALL or MICRO, verify whether entitlement to that entity status still applies.

If the ENTITY STATUS is the same as shown above, pay the TOTAL FEE(S) DUE shown above.

If the ENTITY STATUS is changed from that shown above, on PART B - FEE(S) TRANSMITTAL, complete section number 5 titled "Change in Entity Status (from status indicated above)".

For purposes of this notice, small entity fees are 40% the amount of undiscounted fees, and micro entity fees are 20% the amount of undiscounted fees.

II. PART B - FEE(S) TRANSMITTAL, or its equivalent, must be completed and returned to the United States Patent and Trademark Office (USPTO) with your ISSUE FEE and PUBLICATION FEE (if required). If you are charging the fee(s) to your deposit account, section "4b" of Part B - Fee(s) Transmittal should be completed. If an equivalent of Part B is filed, a request to reapply a previously paid issue fee must be clearly made, and delays in processing may occur due to the difficulty in recognizing the paper as an equivalent of Part B.

III. All communications regarding this application must give the application number. Please direct all communications prior to issuance to Mail Stop ISSUE FEE unless advised to the contrary.

IMPORTANT REMINDER: Maintenance fees are due in utility patents issuing on applications filed on or after Dec. 12, 1980. It is patentee's responsibility to ensure timely payment of maintenance fees when due. More information is available at www.uspto.gov/PatentMaintenanceFees.

PART B - FEE(S) TRANSMITTAL

Complete and send this form, together with applicable fee(s), by mail or fax, or via the USPTO patent electronic filing system.

By mail, send to: Mail Stop ISSUE FEE
Commissioner for Patents
P.O. Box 1450
Alexandria, Virginia 22313-1450

By fax, send to: (571)-273-2885

INSTRUCTIONS: This form should be used for transmitting the ISSUE FEE and PUBLICATION FEE (if required). Blocks 1 through 5 should be completed where appropriate. All further correspondence will be mailed to the current correspondence address as indicated unless corrected below or directed otherwise in Block 1, by (a) specifying a new correspondence address; and/or (b) indicating a separate "FEE ADDRESS" for maintenance fee notifications. **Because electronic patent issuance may occur shortly after issue fee payment, any desired continuing application should preferably be filed prior to payment of this issue fee in order not to jeopardize copendency.**

CURRENT CORRESPONDENCE ADDRESS (Note: Use Block 1 for any change of address)

32361 7590 09/30/2024
GREENBERG TRAURIG (NY)
One Vanderbilt Avenue
NEW YORK, NY 10017

Note: A certificate of mailing can only be used for domestic mailings of the Fee(s) Transmittal. This certificate cannot be used for any other accompanying papers. Each additional paper, such as an assignment or formal drawing, must have its own certificate of mailing or transmission.

Certificate of Mailing or Transmission

I hereby certify that this Fee(s) Transmittal is being deposited with the United States Postal Service with sufficient postage for first class mail in an envelope addressed to the Mail Stop ISSUE FEE address above, or being transmitted to the USPTO via the USPTO patent electronic filing system or by facsimile to (571) 273-2885, on the date below.

(Typed or printed name)
(Signature)
(Date)

APPLICATION NO.	FILING DATE	FIRST NAMED INVENTOR	ATTORNEY DOCKET NO.	CONFIRMATION NO.
18/527,226	12/01/2023	Ali HASSAN	189908.000302	7088

TITLE OF INVENTION: CAMERA INITIALIZATION FOR LANE DETECTION AND DISTANCE ESTIMATION USING SINGLE-VIEW GEOMETRY

APPLN. TYPE	ENTITY STATUS	ISSUE FEE DUE	PUBLICATION FEE DUE	PREV. PAID ISSUE FEE	TOTAL FEE(S) DUE	DATE DUE
nonprovisional	UNDISCOUNTED	$1200	$0.00	$0.00	$1200	12/30/2024

EXAMINER	ART UNIT	CLASS-SUBCLASS
BROWN JR, HOWARD D	2488	348-135000

1. Change of correspondence address or indication of "Fee Address" (37 CFR 1.363).

❑ Change of correspondence address (or Change of Correspondence Address form PTO/AIA/122 or PTO/SB/122) attached.

❑ "Fee Address" indication (or "Fee Address" Indication form PTO/AIA/47 or PTO/SB/47; Rev 03-02 or more recent) attached. **Use of a Customer Number is required.**

2. For printing on the patent front page, list
(1) The names of up to 3 registered patent attorneys or agents OR, alternatively,
(2) The name of a single firm (having as a member a registered attorney or agent) and the names of up to 2 registered patent attorneys or agents. If no name is listed, no name will be printed.

1 _____
2 _____
3 _____

3. ASSIGNEE NAME AND RESIDENCE DATA TO BE PRINTED ON THE PATENT (print or type)

PLEASE NOTE: Unless an assignee is identified below, no assignee data will appear on the patent. If an assignee is identified below, the document must have been previously recorded, or filed for recordation, as set forth in 37 CFR 3.11 and 37 CFR 3.81(a). Completion of this form is NOT a substitute for filing an assignment.

(A) NAME OF ASSIGNEE (B) RESIDENCE: (CITY and STATE OR COUNTRY)

Please check the appropriate assignee category or categories (will not be printed on the patent) : ❑ Individual ❑ Corporation or other private group entity ❑ Government

4a. Fees submitted: ❑ Issue Fee ❑ Publication Fee (if required)

4b. Method of Payment: *(Please first reapply any previously paid fee shown above)*

❑ Electronic Payment via the USPTO patent electronic filing system ❑ Enclosed check ❑ Non-electronic payment by credit card (Attach form PTO-2038)

❑ The Director is hereby authorized to charge the required fee(s), any deficiency, or credit any overpayment to Deposit Account No. _____

5. **Change in Entity Status** (from status indicated above)

❑ Applicant certifying micro entity status. See 37 CFR 1.29

NOTE: Absent a valid certification of Micro Entity Status (see forms PTO/SB/15A and 15B), issue fee payment in the micro entity amount will not be accepted at the risk of application abandonment.

❑ Applicant asserting small entity status. See 37 CFR 1.27

NOTE: If the application was previously under micro entity status, checking this box will be taken to be a notification of loss of entitlement to micro entity status.

❑ Applicant changing to regular undiscounted fee status.

NOTE: Checking this box will be taken to be a notification of loss of entitlement to small or micro entity status, as applicable.

NOTE: This form must be signed in accordance with 37 CFR 1.31 and 1.33. See 37 CFR 1.4 for signature requirements and certifications.

Authorized Signature _____ Date _____

Typed or printed name _____ Registration No. _____

UNITED STATES PATENT AND TRADEMARK OFFICE

UNITED STATES DEPARTMENT OF COMMERCE
United States Patent and Trademark Office
Address: COMMISSIONER FOR PATENTS
P.O. Box 1450
Alexandria, Virginia 22313-1450
www.uspto.gov

APPLICATION NO.	FILING DATE	FIRST NAMED INVENTOR	ATTORNEY DOCKET NO.	CONFIRMATION NO.
18/527,226	12/01/2023	Ali HASSAN	189908.000302	7088

32361 7590 09/30/2024
GREENBERG TRAURIG (NY)
One Vanderbilt Avenue
NEW YORK, NY 10017

EXAMINER	
BROWN JR, HOWARD D	

ART UNIT	PAPER NUMBER
2488	

DATE MAILED: 09/30/2024

Determination of Patent Term Adjustment under 35 U.S.C. 154 (b)
(Applications filed on or after May 29, 2000)

The Office has discontinued providing a Patent Term Adjustment (PTA) calculation with the Notice of Allowance.

Section 1(h)(2) of the AIA Technical Corrections Act amended 35 U.S.C. 154(b)(3)(B)(i) to eliminate the requirement that the Office provide a patent term adjustment determination with the notice of allowance. See Revisions to Patent Term Adjustment, 78 Fed. Reg. 19416, 19417 (Apr. 1, 2013). Therefore, the Office is no longer providing an initial patent term adjustment determination with the notice of allowance. The Office will continue to provide a patent term adjustment determination with the Issue Notification Letter that is mailed to applicant approximately three weeks prior to the issue date of the patent, and will include the patent term adjustment on the patent. Any request for reconsideration of the patent term adjustment determination (or reinstatement of patent term adjustment) should follow the process outlined in 37 CFR 1.705.

Any questions regarding the Patent Term Extension or Adjustment determination should be directed to the Office of Patent Legal Administration at (571)-272-7702. Questions relating to issue and publication fee payments should be directed to the Customer Service Center of the Office of Patent Publication at 1-(888)-786-0101 or (571)-272-4200.

OMB Clearance and PRA Burden Statement for PTOL-85 Part B

The Paperwork Reduction Act (PRA) of 1995 requires Federal agencies to obtain Office of Management and Budget approval before requesting most types of information from the public. When OMB approves an agency request to collect information from the public, OMB (i) provides a valid OMB Control Number and expiration date for the agency to display on the instrument that will be used to collect the information and (ii) requires the agency to inform the public about the OMB Control Number's legal significance in accordance with 5 CFR 1320.5(b).

The information collected by PTOL-85 Part B is required by 37 CFR 1.311. The information is required to obtain or retain a benefit by the public which is to file (and by the USPTO to process) an application. Confidentiality is governed by 35 U.S.C. 122 and 37 CFR 1.14. This collection is estimated to take 30 minutes to complete, including gathering, preparing, and submitting the completed application form to the USPTO. Time will vary depending upon the individual case. Any comments on the amount of time you require to complete this form and/or suggestions for reducing this burden, should be sent to the Chief Information Officer, U.S. Patent and Trademark Office, U.S. Department of Commerce, P.O. Box 1450, Alexandria, Virginia 22313-1450. DO NOT SEND FEES OR COMPLETED FORMS TO THIS ADDRESS. SEND TO: Commissioner for Patents, P.O. Box 1450, Alexandria, Virginia 22313-1450. Under the Paperwork Reduction Act of 1995, no persons are required to respond to a collection of information unless it displays a valid OMB control number.

Privacy Act Statement

The Privacy Act of 1974 (P.L. 93-579) requires that you be given certain information in connection with your submission of the attached form related to a patent application or patent. The United States Patent and Trademark Office (USPTO) collects the information in this record under authority of 35 U.S.C. 2. The USPTO's system of records is used to manage all applicant and owner information including name, citizenship, residence, post office address, and other information with respect to inventors and their legal representatives pertaining to the applicant's/ owner's activities in connection with the invention for which a patent is sought or has been granted. The applicable Privacy Act System of Records Notice for the information collected in this form is COMMERCE/PAT-TM-7 Patent Application Files, available in the Federal Register at 78 FR 19243 (March 29, 2013).
https://www.govinfo.gov/content/pkg/FR-2013-03-29/pdf/2013-07341.pdf

Routine uses of the information in this record may include disclosure to:

1) law enforcement, in the event that the system of records indicates a violation or potential violation of law;
2) a federal, state, local, or international agency, in response to its request;
3) a contractor of the USPTO having need for the information in order to perform a contract;
4) the Department of Justice for determination of whether the Freedom of Information Act (FOIA) requires disclosure of the record;
5) a Member of Congress submitting a request involving an individual to whom the record pertains, when the individual has requested the Member's assistance with respect to the subject matter of the record;
6) a court, magistrate, or administrative tribunal, in the course of presenting evidence, including disclosures to opposing counsel in the course of settlement negotiations;
7) the Administrator, General Services Administration (GSA), or their designee, during an inspection of records conducted by GSA under authority of 44 U.S.C. 2904 and 2906, in accordance with the GSA regulations and any other relevant (i.e., GSA or Commerce) directive, where such disclosure shall not be used to make determinations about individuals;
8) another federal agency for purposes of National Security review (35 U.S.C. 181) and for review pursuant to the Atomic Energy Act (42 U.S.C. 218(c));
9) the Office of Personnel Management (OPM) for personnel research purposes; and
10) the Office of Management and Budget (OMB) for legislative coordination and clearance.

If you do not furnish the information requested on this form, the USPTO may not be able to process and/or examine your submission, which may result in termination of proceedings, abandonment of the application, and/or expiration of the patent.

Notice of Allowability	Application No. 18/527,226	Applicant(s) HASSAN et al.	
	Examiner HOWARD D BROWN JR	Art Unit 2488	AIA (FITF) Status Yes

-- The MAILING DATE of this communication appears on the cover sheet with the correspondence address--

All claims being allowable, PROSECUTION ON THE MERITS IS (OR REMAINS) CLOSED in this application. If not included herewith (or previously mailed), a Notice of Allowance (PTOL-85) or other appropriate communication will be mailed in due course. **THIS NOTICE OF ALLOWABILITY IS NOT A GRANT OF PATENT RIGHTS.** This application is subject to withdrawal from issue at the initiative of the Office or upon petition by the applicant. See 37 CFR 1.313 and MPEP 1308.

1. ☑ This communication is responsive to 09/12/2024.
   ☐ A declaration(s)/affidavit(s) under **37 CFR 1.130(b)** was/were filed on _____.

2. ☐ An election was made by the applicant in response to a restriction requirement set forth during the interview on _____; the restriction requirement and election have been incorporated into this action.

3. ☑ The allowed claim(s) is/are 21-40 . As a result of the allowed claim(s), you may be eligible to benefit from the **Patent Prosecution Highway** program at a participating intellectual property office for the corresponding application. For more information, please see **http://www.uspto.gov/patents/init_events/pph/index.jsp** or send an inquiry to **PPHfeedback@uspto.gov.**

4. ☐ Acknowledgment is made of a claim for foreign priority under 35 U.S.C. § 119(a)-(d) or (f).

   Certified copies:

   a) ☐ All b) ☐ Some* c) ☐ None of the:

   1. ☐ Certified copies of the priority documents have been received.
   2. ☐ Certified copies of the priority documents have been received in Application No. _____ .
   3. ☐ Copies of the certified copies of the priority documents have been received in this national stage application from the International Bureau (PCT Rule 17.2(a)).

   * Certified copies not received: _____ .

Applicant has THREE MONTHS FROM THE "MAILING DATE" of this communication to file a reply complying with the requirements noted below. Failure to timely comply will result in ABANDONMENT of this application.
THIS THREE-MONTH PERIOD IS NOT EXTENDABLE.

5. ☐ CORRECTED DRAWINGS (as "replacement sheets") must be submitted.
   ☐ including changes required by the attached Examiner's Amendment / Comment or in the Office action of Paper No./Mail Date _____ .

   Identifying indicia such as the application number (see 37 CFR 1.84(c)) should be written on the drawings in the front (not the back) of each sheet. Replacement sheet(s) should be labeled as such in the header according to 37 CFR 1.121(d).

6. ☐ DEPOSIT OF and/or INFORMATION about the deposit of BIOLOGICAL MATERIAL must be submitted. Note the attached Examiner's comment regarding REQUIREMENT FOR THE DEPOSIT OF BIOLOGICAL MATERIAL.

Attachment(s)

1. ☑ Notice of References Cited (PTO-892)
2. ☐ Information Disclosure Statements (PTO/SB/08), Paper No./Mail Date _____.
3. ☐ Examiner's Comment Regarding Requirement for Deposit of Biological Material _____.
4. ☐ Interview Summary (PTO-413), Paper No./Mail Date. _____.
5. ☐ Examiner's Amendment/Comment
6. ☑ Examiner's Statement of Reasons for Allowance
7. ☐ Other _____.

/HOWARD D BROWN JR/
Examiner, Art Unit 2488

DETAILED ACTION

1. This Office Action for U.S. Patent Application No. 18/527,226 is responsive to communications filed on 09/12/2024, in reply to the Non-Final Rejection of 06/12/2024. Currently, **claims 21-40** are pending.

Notice of Pre-AIA or AIA Status

2. The present application, filed on or after March 16, 2013, is being examined under the first inventor to file provisions of the AIA.

Terminal Disclaimer

3. The terminal disclaimer filed on 09/12/2024 disclaiming the terminal portion of any patent granted on this application which would extend beyond the expiration date has been reviewed and is accepted. The terminal disclaimer has been recorded.

Response to Arguments

4. In regard to **claims 21-40**, these claims were provisionally rejected on the grounds of nonstatutory double patenting over claims 1-20 of Patent Application 11,875,580. The Applicant submits that the filed Terminal Disclaimer is sufficient to overcome these rejections. The Examiner respectfully agrees. As such, the provisional nonstatutory double patenting rejections of claims 21-40 have been withdrawn.

REASONS FOR ALLOWANCE

5. The following is an examiner's statement of reasons for allowance: The instant invention is related to a monocular camera (e.g., an image sensor) that may be retrofitted and adjustable

within the vehicle such as, the vehicle's dashboard. Upon driving, the camera initializes itself to determine its height with respect to the ground as well as a road plane normal. Thus, the camera may be installed in various positions and later re-initialized or recalibrated as needed.

Prior art was found for the claims as follows:

Kwant1 et al., [US Pub. No.: 2019/0034740 A1] Kwant2 et al., [US Pub. No.: 2019/0102674 A1].

Re. Claim 21, Kwant1 et al., [US Pub. No.: 2019/0034740 A1] discloses

A method comprising: receiving an image of a roadway recorded by a camera device installed within a vehicle ***[network for receiving image signals from a vehicle camera of a roadway |Fig.1 el 113, 0076, 0081]***;

detecting a horizon line in the image ***[determining a horizontal line in the image at which a maximum number of the one or more extended road lanes crosses over a minimum horizontal extent of the horizontal line |Abstract]***;

overlaying a line on the image to generate an overlaid image ***[Fig.4 401A-C]***;

transmitting the overlaid image to a computing device over a network ***[In step 607, the horizon estimation platform 105 labels or annotates one or more map features depicted in the image based on the horizon|Fig.1 el 100, Fig.6 Step 607, 0071]***;

Kwant2 et al., [US Pub. No.: 2019/0102674 A1] discloses:

receiving a modification of the line from the computing device, the modification comprising a new line at a second position ***[The learner module then computes an accuracy of the predictions for the initial set of model parameters. If the accuracy or level of performance does not meet a threshold or configured level, the learner module***

incrementally adjusts the model parameters until the model generates predictions at a desired or configured level of accuracy with respect to the manually annotated labels in the training data (e.g., the ground truth data).|0051];

computing a camera parameter based on the new line ***[The machine learning system 103 generates respective distributions or probability models for the training set 401 and the reservoir set 405 according to the various embodiments described herein. These distributions are combined into a single model (e.g., the sampling distribution 401) describing a candidate observation 407's similarity to the training set and/or the candidate pool at evaluation time to either accept or reject the candidate observation 407 from the reservoir set 405 for annotation and inclusion in the training data set 403]***;

and transmitting data representing the camera parameter to the camera device ***[data representing camera parameter to the camera device |Fig. 8a]***.

Therefore, it would have been obvious to one with ordinary skill in the art before the effective filing date of the claimed invention to combine the horizon estimation using lane lines of Kwant1 with Kwant2 for selecting representative training observations for annotation in machine learning model.

6. Applicant uniquely claimed a distinct feature in the instant invention, which are not found in the prior art, either singularly or in combination. The claims are allowable because the prior art fails to disclose the claimed feature is "...detecting a horizon line in the image; overlaying a line on the image to generate an overlaid image; transmitting the overlaid image to a computing device over a network; receiving a modification of the line from the computing device, the

modification comprising a new line at a second position; computing a camera parameter based on the new line; and transmitting data representing the camera parameter to the camera device".

This feature is not found or suggested in the prior art.

7. Any comments considered necessary by applicant must be submitted no later than the payment of the issue fee and, to avoid processing delays, should preferably accompany the issue fee. Such submissions should be clearly labeled "Comments on Statement of reasons for Allowance."

8. Claims 21-40 are allowed.

Conclusion

Any inquiry concerning this communication or earlier communications from the examiner should be directed to HOWARD D BROWN JR whose telephone number is (571)272-4371. The examiner can normally be reached Monday - Friday 7:30AM - 5:00PM EST.

Examiner interviews are available via telephone, in-person, and video conferencing using a USPTO supplied web-based collaboration tool. To schedule an interview, applicant is encouraged to use the USPTO Automated Interview Request (AIR) at http://www.uspto.gov/interviewpractice.

If attempts to reach the examiner by telephone are unsuccessful, the examiner's supervisor, Sathyanarayanan Perungavoor can be reached on 5712727455. The fax phone number for the organization where this application or proceeding is assigned is 571-273-8300.

Information regarding the status of published or unpublished applications may be obtained from Patent Center. Unpublished application information in Patent Center is available to registered users. To file and manage patent submissions in Patent Center, visit: https://patentcenter.uspto.gov. Visit https://www.uspto.gov/patents/apply/patent-center for more information about Patent Center and https://www.uspto.gov/patents/docx for information about filing in DOCX format. For additional questions, contact the Electronic Business Center (EBC) at 866-217-9197 (toll-free). If you would like assistance from a USPTO Customer Service Representative, call 800-786-9199 (IN USA OR CANADA) or 571-272-1000.

HOWARD D. BROWN JR
Primary Examiner
Art Unit 2488

/HOWARD D BROWN JR/
Examiner, Art Unit 2488

PART B - FEE(S) TRANSMITTAL

Complete and send this form, together with applicable fee(s), by mail or fax, or via the USPTO patent electronic filing system.

By mail, send to: Mail Stop ISSUE FEE
Commissioner for Patents
P.O. Box 1450
Alexandria, Virginia 22313-1450

By fax, send to: (571)-273-2885

INSTRUCTIONS: This form should be used for transmitting the ISSUE FEE and PUBLICATION FEE (if required). Blocks 1 through 5 should be completed where appropriate. All further correspondence will be mailed to the current correspondence address as indicated unless corrected below or directed otherwise in Block 1, by (a) specifying a new correspondence address; and/or (b) indicating a separate "FEE ADDRESS" for maintenance fee notifications. **Because electronic patent issuance may occur shortly after issue fee payment, any desired continuing application should preferably be filed prior to payment of this issue fee in order not to jeopardize copendency.**

CURRENT CORRESPONDENCE ADDRESS (Note: Use Block 1 for any change of address)

32361 7890 09/30/2024
GREENBERG TRAURIG (NY)
One Vanderbilt Avenue
NEW YORK, NY 10017

Note: A certificate of mailing can only be used for domestic mailings of the Fee(s) Transmittal. This certificate cannot be used for any other accompanying papers. Each additional paper, such as an assignment or formal drawing, must have its own certificate of mailing or transmission.

Certificate of Mailing or Transmission

I hereby certify that this Fee(s) Transmittal is being deposited with the United States Postal Service with sufficient postage for first class mail in an envelope addressed to the Mail Stop ISSUE FEE address above, or being transmitted to the USPTO via the USPTO patent electronic filing system or by facsimile to (571) 273-2885, on the date below.

Judi Cordo	(Typed or printed name)
/Judi Cordo/	(Signature)
October 2, 2024	(Date)

APPLICATION NO.	FILING DATE	FIRST NAMED INVENTOR	ATTORNEY DOCKET NO.	CONFIRMATION NO.
18/527,226	12/01/2023	Ali HASSAN	189908.000302	7088

TITLE OF INVENTION: CAMERA INITIALIZATION FOR LANE DETECTION AND DISTANCE ESTIMATION USING SINGLE-VIEW GEOMETRY

APPLN. TYPE	ENTITY STATUS	ISSUE FEE DUE	PUBLICATION FEE DUE	PREV. PAID ISSUE FEE	TOTAL FEE(S) DUE	DATE DUE
nonprovisional	UNDISCOUNTED	$1200	$0.00	$0.00	$1200	12/30/2024

EXAMINER	ART UNIT	CLASS-SUBCLASS
BROWN JR, HOWARD D	2488	348-135000

1. Change of correspondence address or indication of "Fee Address" (37 CFR 1.363).

☐ Change of correspondence address (or Change of Correspondence Address form PTO/AIA/122 or PTO/SB/122) attached.

☐ "Fee Address" indication (or "Fee Address" Indication form PTO/AIA/47 or PTO/SB/47; Rev 03-02 or more recent) attached. **Use of a Customer Number is required.**

2. For printing on the patent front page, list
(1) The names of up to 3 registered patent attorneys or agents OR, alternatively,
(2) The name of a single firm (having as a member a registered attorney or agent) and the names of up to 2 registered patent attorneys or agents. If no name is listed, no name will be printed.

1 George David Zalepa
2 Greenberg Traurig, LLP
3

3. ASSIGNEE NAME AND RESIDENCE DATA TO BE PRINTED ON THE PATENT (print or type)

PLEASE NOTE: Unless an assignee is identified below, no assignee data will appear on the patent. If an assignee is identified below, the document must have been previously recorded, or filed for recordation, as set forth in 37 CFR 3.11 and 37 CFR 3.81(a). Completion of this form is NOT a substitute for filing an assignment.

(A) NAME OF ASSIGNEE: MOTIVE TECHNOLOGIES, INC.

(B) RESIDENCE: (CITY and STATE OR COUNTRY): San Francisco, CA

Please check the appropriate assignee category or categories (will not be printed on the patent) : ☐ Individual ☒ Corporation or other private group entity ☐ Government

4a. Fees submitted: ☒ Issue Fee ☐ Publication Fee (if required)

4b. Method of Payment: *(Please first reapply any previously paid fee shown above)*

☒ Electronic Payment via the USPTO patent electronic filing system ☐ Enclosed check ☐ Non-electronic payment by credit card (Attach form PTO-2038)

☒ The Director is hereby authorized to charge the required fee(s), any deficiency, or credit any overpayment to Deposit Account No. 50-1561

5. **Change in Entity Status** (from status indicated above)

☐ Applicant certifying micro entity status. See 37 CFR 1.29

NOTE: Absent a valid certification of Micro Entity Status (see forms PTO/SB/15A and 15B), issue fee payment in the micro entity amount will not be accepted at the risk of application abandonment.

☐ Applicant asserting small entity status. See 37 CFR 1.27

NOTE: If the application was previously under micro entity status, checking this box will be taken to be a notification of loss of entitlement to micro entity status.

☐ Applicant changing to regular undiscounted fee status.

NOTE: Checking this box will be taken to be a notification of loss of entitlement to small or micro entity status, as applicable.

NOTE: This form must be signed in accordance with 37 CFR 1.31 and 1.33. See 37 CFR 1.4 for signature requirements and certifications.

Authorized Signature /George Zalepa/ Date October 2, 2024

Typed or printed name George Zalepa Registration No. 72,706

UNITED STATES
PATENT AND TRADEMARK OFFICE

P.O. Box 1450
Alexandria, VA 22313 - 1450
www.uspto.gov

ELECTRONIC ACKNOWLEDGEMENT RECEIPT

APPLICATION #	RECEIPT DATE / TIME	ATTORNEY DOCKET #
18/527,226	**10/02/2024 08:07:32 AM Z ET**	**189908.000302**

Title of Invention

CAMERA INITIALIZATION FOR LANE DETECTION AND DISTANCE ESTIMATION USING SINGLE-VIEW GEOMETRY

Application Information

APPLICATION TYPE	Utility - Nonprovisional Application under 35 USC 111(a)	PATENT #	-
CONFIRMATION #	7088	FILED BY	Judi Cordo
PATENT CENTER #	67404295	FILING DATE	12/01/2023
CUSTOMER #	32361	FIRST NAMED INVENTOR	Ali HASSAN
CORRESPONDENCE ADDRESS	-	AUTHORIZED BY	George Zalepa

Documents

TOTAL DOCUMENTS: 1

DOCUMENT	PAGES	DESCRIPTION	SIZE (KB)
189908_000302_issue_fee_transmittal.pdf	1	Issue Fee Payment (PTO-85B)	145 KB

Digest

DOCUMENT	MESSAGE DIGEST(SHA-512)
189908_000302_issue_fee_transmittal.pdf	2E619A411CBAB393A491E34EC502013C4EEC9326F510A5DEE1F82C8D79966BBA31AA22F8656DBF3C9AA4834E47BB3AB76AB4630230280E6AA6C41033BE333FB2

This Acknowledgement Receipt evidences receipt on the noted date by the USPTO of the indicated documents, characterized by the applicant, and including page counts, where applicable. It serves as evidence of receipt similar to a Post Card, as described in MPEP 503.

New Applications Under 35 U.S.C. 111

If a new application is being filed and the application includes the necessary components for filing date (see 37 CFR 1.53(b)-(d) and MPEP 506), a Filing Receipt (37 CFR 1.54) will be issued in due course and the date shown on this Acknowledgement Receipt will establish the filing date of the application

National Stage of an International Application under 35 U.S.C. 371

If a timely submission to enter the national stage of an international application is compliant with the conditions of 35 U.S.C. 371 and other applicable requirements a Form PCT/DO/EO/903 indicating acceptance of the application as a national stage submission under 35 U.S.C. 371 will be issued in addition to the Filing Receipt, in due course.

New International Application Filed with the USPTO as a Receiving Office

If a new international application is being filed and the international application includes the necessary components for an international filing date (see PCT Article 11 and MPEP 1810), a Notification of the International Application Number and of the International Filing Date (Form PCT/RO/105) will be issued in due course, subject to prescriptions concerning national security, and the date shown on this Acknowledgement Receipt will establish the international filing date of the application.

UNITED STATES
PATENT AND TRADEMARK OFFICE

P.O. Box 1450
Alexandria, VA 22313 - 1450
www.uspto.gov

ELECTRONIC PAYMENT RECEIPT

APPLICATION #	RECEIPT DATE / TIME	ATTORNEY DOCKET #
18/527,226	**10/02/2024 08:07:32 AM Z ET**	**189908.000302**

Title of Invention

CAMERA INITIALIZATION FOR LANE DETECTION AND DISTANCE ESTIMATION USING SINGLE-VIEW GEOMETRY

Application Information

APPLICATION TYPE	Utility - Nonprovisional Application under 35 USC 111(a)	PATENT #	-
CONFIRMATION #	7088	FILED BY	Judi Cordo
PATENT CENTER #	67404295	AUTHORIZED BY	George Zalepa
CUSTOMER #	32361	FILING DATE	12/01/2023
CORRESPONDENCE ADDRESS	-	FIRST NAMED INVENTOR	Ali HASSAN

Payment Information

PAYMENT METHOD	PAYMENT TRANSACTION ID	PAYMENT AUTHORIZED BY
DA / 501561	**E202402908476602**	**Judi Cordo**

PRE-AUTHORIZED ACCOUNT	PRE-AUTHORIZED CATEGORY
501561	**37 CFR 1.16 (National application filing, search, and examination fees); 37 CFR 1.17 (Patent application and reexamination processing fees); 37 CFR 1.19 (Document supply fees); 37 CFR 1.21 (Miscellaneous fees and charges)**

FEE CODE	DESCRIPTION	ITEM PRICE($)	QUANTITY	ITEM TOTAL($)
1501	UTILITY ISSUE FEE	1200.00	1	1200.00
			TOTAL AMOUNT:	**$1,200.00**

This Acknowledgement Receipt evidences receipt on the noted date by the USPTO of the indicated documents, characterized by the applicant, and including page counts, where applicable. It serves as evidence of receipt similar to a Post Card, as described in MPEP 503.

New Applications Under 35 U.S.C. 111

If a new application is being filed and the application includes the necessary components for filing date (see 37 CFR 1.53(b)-(d) and MPEP 506), a Filing Receipt (37 CFR 1.54) will be issued in due course and the date shown on this Acknowledgement

Receipt will establish the filing date of the application

National Stage of an International Application under 35 U.S.C. 371

If a timely submission to enter the national stage of an international application is compliant with the conditions of 35 U.S.C. 371 and other applicable requirements a Form PCT/DO/EO/903 indicating acceptance of the application as a national stage submission under 35 U.S.C. 371 will be issued in addition to the Filing Receipt, in due course.

New International Application Filed with the USPTO as a Receiving Office

If a new international application is being filed and the international application includes the necessary components for an international filing date (see PCT Article 11 and MPEP 1810), a Notification of the International Application Number and of the International Filing Date (Form PCT/RO/105) will be issued in due course, subject to prescriptions concerning national security, and the date shown on this Acknowledgement Receipt will establish the international filing date of the application.

UNITED STATES PATENT AND TRADEMARK OFFICE

UNITED STATES DEPARTMENT OF COMMERCE
United States Patent and Trademark Office
Address: COMMISSIONER FOR PATENTS
P.O. Box 1450
Alexandria, Virginia 22313-1450
www.uspto.gov

APPLICATION NO.	ISSUE DATE	PATENT NO.	ATTORNEY DOCKET NO.	CONFIRMATION NO.
18/527,226	11/05/2024	12136276	189908.000302	7088

32361 7590 10/16/2024

GREENBERG TRAURIG (NY)
One Vanderbilt Avenue
NEW YORK, NY 10017

ISSUE NOTIFICATION

The projected patent number and issue date are specified above. The patent will issue electronically. The electronically issued patent is the official patent grant pursuant to 35 U.S.C. § 153. The patent may be accessed on or after the issue date through Patent Center at https://patentcenter.uspto.gov/. The patent will be available in both the public and the private sides of Patent Center. Further assistance in electronically accessing the patent, or about Patent Center, is available by calling the Patent Electronic Business Center at 1-888-217-9197.

The USPTO is implementing electronic patent issuance with a transition period, during which period the USPTO will mail a ceremonial paper copy of the electronic patent grant to the correspondence address of record. Additional copies of the patent (i.e., certified and presentation copies) may be ordered for a fee from the USPTO's Certified Copy Center at https://certifiedcopycenter.uspto.gov/index.html. The Certified Copy Center may be reached at (800)972-6382.

Determination of Patent Term Adjustment under 35 U.S.C. 154 (b)
(application filed on or after May 29, 2000)

The Patent Term Adjustment is 0 day(s). Any patent to issue from the above-identified application will include an indication of the adjustment on the front page.

If a Continued Prosecution Application (CPA) was filed in the above-identified application, the filing date that determines Patent Term Adjustment is the filing date of the most recent CPA.

Applicant will be able to obtain more detailed information by accessing the Patent Center (https://patentcenter.uspto.gov).

Any questions regarding the Patent Term Extension or Adjustment determination should be directed to the Office of Patent Legal Administration at (571)-272-7702. Questions relating to issue and publication fee payments should be directed to the Application Assistance Unit (AAU) of the Office of Patents Stakeholder Experience (OPSE), Stakeholder Support Division (SSD) at (571)-272-4200.

INVENTOR(s) (Please see PATENT CENTER site https://patentcenter.uspto.gov for additional inventors):

Ali HASSAN, Lahore, PAKISTAN;
Ahmed ALI, Lahore, PAKISTAN;
Syed Wajahat Ali Shah KAZMI, Lahore, PAKISTAN;

APPLICANT(s) (Please see PATENT CENTER site https://patentcenter.uspto.gov for additional applicants):

MOTIVE TECHNOLOGIES, INC., San Francisco, CA;

The United States represents the largest, most dynamic marketplace in the world and is an unparalleled location for business investment, innovation, and commercialization of new technologies. The USA offers tremendous resources and advantages for those who invest and manufacture goods here. Through SelectUSA, our nation works to encourage and facilitate business investment. To learn more about why the USA is the best country in the world to develop technology, manufacture products, and grow your business, visit SelectUSA.gov.

UNITED STATES PATENT AND TRADEMARK OFFICE

UNITED STATES DEPARTMENT OF COMMERCE
United States Patent and Trademark Office
Address: COMMISSIONER FOR PATENTS
P.O. Box 1450
Alexandria, Virginia 22313-1450
www.uspto.gov

APPLICATION NO.	FILING DATE	FIRST NAMED INVENTOR	ATTORNEY DOCKET NO.	CONFIRMATION NO.
18/527,226	12/01/2023	Ali HASSAN	189908.000302	7088

32361 7590 11/05/2024

GREENBERG TRAURIG (NY)
One Vanderbilt Avenue
NEW YORK, NY 10017

EXAMINER
BROWN JR, HOWARD D

ART UNIT	PAPER NUMBER
2488	

NOTIFICATION DATE	DELIVERY MODE
11/05/2024	ELECTRONIC

Please find below and/or attached an Office communication concerning this application or proceeding.

The time period for reply, if any, is set in the attached communication.

Notice of the Office communication was sent electronically on above-indicated "Notification Date" to the following e-mail address(es):

cordesp@gtlaw.com
mendozae@gtlaw.com
njdocket@gtlaw.com

APPLICATION NO.	ISSUE DATE	PATENT NO.
18/527,226	05-Nov-2024	12136276

GREENBERG TRAURIG (NY)
One Vanderbilt Avenue
NEW YORK, NY 10017

EGRANT NOTIFICATION

Your electronic patent grant (eGrant) is now available, which can be accessed via Patent Center at https://patentcenter.uspto.gov

The electronic patent grant is the official patent grant under 35 U.S.C. 153. For more information, please visit https://www.uspto.gov/electronicgrants