US009775682B2

(12) **United States Patent**
Quaid et al.

(10) **Patent No.: US 9,775,682 B2**
(45) **Date of Patent: Oct. 3, 2017**

(54) **TELEOPERATION SYSTEM WITH VISUAL INDICATOR AND METHOD OF USE DURING SURGICAL PROCEDURES**

(71) Applicant: **MAKO Surgical Corp.**, Ft. Lauderdale, FL (US)

(72) Inventors: **Arthur E. Quaid**, North Miami, FL (US); **Rony A. Abovitz**, Hollywood, FL (US)

(73) Assignee: **MAKO SURGICAL CORP.**, Fort Lauderdale, FL (US)

(*) Notice: Subject to any disclaimer, the term of this patent is extended or adjusted under 35 U.S.C. 154(b) by 0 days.

(21) Appl. No.: **15/131,683**

(22) Filed: **Apr. 18, 2016**

(65) **Prior Publication Data**

US 2016/0228204 A1 Aug. 11, 2016

Related U.S. Application Data

(60) Continuation of application No. 12/144,507, filed on Jun. 23, 2008, which is a division of application No.
(Continued)

(51) **Int. Cl.**
G06F 19/00 (2011.01)
A61B 34/30 (2016.01)
(Continued)

(52) **U.S. Cl.**
CPC ***A61B 34/30*** (2016.02); ***A61B 17/1675*** (2013.01); ***A61B 17/1695*** (2013.01);
(Continued)

(58) **Field of Classification Search**
USPC 700/264, 258, 245, 249; 600/424; 128/899; 606/1, 130
See application file for complete search history.

(56) **References Cited**

U.S. PATENT DOCUMENTS

4,747,393 A 5/1988 Medwid
4,903,536 A 2/1990 Salisbury, Jr. et al.
(Continued)

FOREIGN PATENT DOCUMENTS

EP 1059067 A1 12/2000
EP 1184684 A2 3/2002
(Continued)

OTHER PUBLICATIONS

Bainville, et al., Concepts and Methods of Registration for Computer-Integrated Surgery, Computer Assisted Orthopedic Surgery (CAOS), 1999, Hogrefe & Huber Publishers, 22 pages.
(Continued)

Primary Examiner — Ronnie Mancho
(74) *Attorney, Agent, or Firm* — Howard & Howard Attorneys PLLC

(57) **ABSTRACT**

Teleoperation systems and methods for use during a surgical procedure. The teleoperation system comprises a surgical tool and a master input device for being moved by a user. A slave device is coupled to the surgical tool and responsive to movement of the master input device. The slave device is configured to be operated in a first mode or a second mode. In the first mode, the surgical tool is placed in a desired pose with respect to a target region in response to a manual force applied to the slave device. In the second mode, the surgical tool is manipulated during the surgical procedure in response to movement of the master input device by the user. A visual indicator is coupled to the surgical tool or the slave device to emit light in the second mode to provide visual information to the user in the second mode.

27 Claims, 13 Drawing Sheets

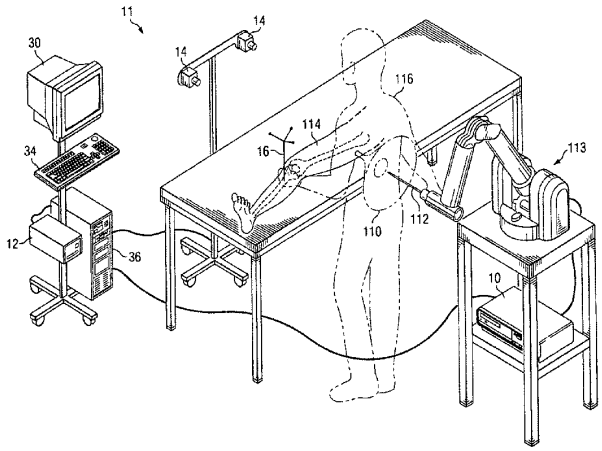

Samsara EX1024
Samsara v. Motive Tech. Inc.
IPR2026-00034

Related U.S. Application Data

11/357,197, filed on Feb. 21, 2006, now Pat. No. 8,010,180, which is a continuation-in-part of application No. 10/384,072, filed on Mar. 6, 2003, now Pat. No. 7,206,626, and a continuation-in-part of application No. 10/384,077, filed on Mar. 6, 2003, now Pat. No. 7,206,627, and a continuation-in-part of application No. 10/384,078, filed on Mar. 6, 2003, now Pat. No. 8,095,200, and a continuation-in-part of application No. 10/384,194, filed on Mar. 6, 2003, now Pat. No. 7,747,311, and a continuation-in-part of application No. 10/621,119, filed on Jul. 16, 2003, now Pat. No. 7,831,292, which is a continuation-in-part of application No. 10/384,078, filed on Mar. 6, 2003, now Pat. No. 8,095,200, and a continuation-in-part of application No. 10/384,072, filed on Mar. 6, 2003, now Pat. No. 7,206,626.

(60) Provisional application No. 60/362,368, filed on Mar. 6, 2002, provisional application No. 60/655,642, filed on Feb. 22, 2005, provisional application No. 60/759,186, filed on Jan. 17, 2006.

(51) **Int. Cl.**

A61F 2/30	(2006.01)
G06F 3/01	(2006.01)
A61B 17/16	(2006.01)
A61B 34/37	(2016.01)
A61B 34/35	(2016.01)
A61N 1/05	(2006.01)
A61N 1/36	(2006.01)
A61N 1/372	(2006.01)
A61F 2/46	(2006.01)
A61B 5/11	(2006.01)
A61B 17/17	(2006.01)
A61B 17/00	(2006.01)
A61F 2/38	(2006.01)
A61B 5/00	(2006.01)
A61B 90/00	(2016.01)
A61B 34/10	(2016.01)
A61B 34/20	(2016.01)
A61B 34/00	(2016.01)
A61B 90/14	(2016.01)

(52) **U.S. Cl.**

CPC ***A61B 17/1703*** (2013.01); ***A61B 17/1764*** (2013.01); ***A61B 34/10*** (2016.02); ***A61B 34/20*** (2016.02); ***A61B 34/35*** (2016.02); ***A61B 34/37*** (2016.02); ***A61B 34/70*** (2016.02); ***A61B 34/71*** (2016.02); ***A61B 34/74*** (2016.02); ***A61B 34/76*** (2016.02); ***A61B 90/36*** (2016.02); ***A61B 90/361*** (2016.02); ***A61B 90/37*** (2016.02); ***A61F 2/30942*** (2013.01); ***A61N 1/0534*** (2013.01); ***A61N 1/3605*** (2013.01); ***A61N 1/372*** (2013.01); ***G06F 3/016*** (2013.01); *A61B 5/1127* (2013.01); *A61B 5/745* (2013.01); *A61B 17/1677* (2013.01); *A61B 17/17* (2013.01); *A61B 17/1739* (2013.01); *A61B 17/1767* (2013.01); *A61B 34/25* (2016.02); *A61B 90/14* (2016.02); *A61B 2017/00115* (2013.01); *A61B 2017/00119* (2013.01); *A61B 2017/00725* (2013.01); *A61B 2034/102* (2016.02); *A61B 2034/105* (2016.02); *A61B 2034/107* (2016.02); *A61B 2034/108* (2016.02); *A61B 2034/207* (2016.02); *A61B 2034/2048* (2016.02); *A61B 2034/2051* (2016.02); *A61B 2034/2055* (2016.02); *A61B 2034/2059* (2016.02); *A61B 2034/2068* (2016.02); *A61B 2034/252* (2016.02); *A61B 2034/254* (2016.02); *A61B 2034/305* (2016.02); *A61B 2090/08021* (2016.02); *A61B 2090/365* (2016.02); *A61B 2090/3937* (2016.02); *A61B 2090/3983* (2016.02); *A61F 2/38* (2013.01); *A61F 2002/4632* (2013.01); *A61F 2002/4633* (2013.01); *G05B 2219/36432* (2013.01); *G05B 2219/39196* (2013.01); *G05B 2219/40478* (2013.01); *G05B 2219/45117* (2013.01); *G05B 2219/45171* (2013.01)

(56) **References Cited**

U.S. PATENT DOCUMENTS

4,979,949	A	12/1990	Matsen, III et al.	
5,046,375	A	9/1991	Salisbury, Jr. et al.	
5,086,401	A	2/1992	Glassman et al.	
5,142,930	A	9/1992	Allen et al.	
5,154,717	A	10/1992	Matsen, III et al.	
5,207,114	A	5/1993	Salisbury, Jr. et al.	
5,230,338	A	7/1993	Allen et al.	
5,236,432	A	8/1993	Matsen, III et al.	
5,279,309	A *	1/1994	Taylor	A61B 34/20 600/595
5,299,288	A	3/1994	Glassman et al.	
5,343,385	A	8/1994	Joskowicz et al.	
5,388,480	A	2/1995	Townsend	
5,399,951	A	3/1995	Lavallee et al.	
5,402,801	A	4/1995	Taylor	
5,408,409	A	4/1995	Glassman et al.	
5,445,144	A	8/1995	Wodicka et al.	
5,445,166	A	8/1995	Taylor	
5,452,941	A	9/1995	Halse et al.	
5,551,429	A	9/1996	Fitzpatrick et al.	
5,572,999	A	11/1996	Funda et al.	
5,576,727	A	11/1996	Rosenberg et al.	
5,587,937	A	12/1996	Massie et al.	
5,611,353	A	3/1997	Dance et al.	
5,625,576	A	4/1997	Massie et al.	
5,630,431	A	5/1997	Taylor	
5,638,819	A	6/1997	Manwaring et al.	
5,676,673	A	10/1997	Ferre et al.	
5,682,886	A	11/1997	Delp et al.	
5,688,280	A	11/1997	Booth et al.	
5,694,013	A	12/1997	Stewart et al.	
5,695,500	A	12/1997	Taylor et al.	
5,701,140	A	12/1997	Rosenberg et al.	
5,704,791	A	1/1998	Gillio	
5,727,554	A	3/1998	Kalend et al.	
5,766,016	A	6/1998	Sinclair et al.	
5,769,640	A	6/1998	Jacobus et al.	
5,792,147	A	8/1998	Evans et al.	
5,799,055	A	8/1998	Peshkin et al.	
5,806,518	A	9/1998	Mittelstadt	
5,831,408	A	11/1998	Jacobus et al.	
5,855,553	A	1/1999	Tajima et al.	
5,871,018	A	2/1999	Delp et al.	
5,887,121	A	3/1999	Funda et al.	
5,888,220	A	3/1999	Felt et al.	
5,898,599	A	4/1999	Massie et al.	
5,928,137	A	7/1999	Green	
5,950,629	A	9/1999	Taylor et al.	
5,976,156	A	11/1999	Taylor et al.	
5,978,696	A	11/1999	Vomlehn et al.	
5,980,535	A	11/1999	Barnett et al.	
5,984,930	A	11/1999	Maciunas et al.	
5,987,960	A	11/1999	Messner et al.	
6,002,859	A	12/1999	DiGioia, III et al.	
6,006,126	A	12/1999	Cosman	
6,006,127	A	12/1999	Van Der brug et al.	
6,017,305	A	1/2000	Bonutti	
6,033,415	A	3/2000	Mittelstadt et al.	
6,084,587	A	7/2000	Tarr et al.	

(56) **References Cited**

U.S. PATENT DOCUMENTS

6,104,158 A 8/2000 Jacobus et al.
6,109,270 A 8/2000 Mah et al.
6,111,577 A 8/2000 Zilles et al.
6,113,395 A 9/2000 Hon
6,147,674 A 11/2000 Rosenberg et al.
6,161,032 A 12/2000 Acker
6,188,728 B1 2/2001 Hurst
6,191,796 B1 2/2001 Tarr
6,201,984 B1 * 3/2001 Funda A61B 1/00193 600/407
6,205,411 B1 3/2001 Digioia, III
6,219,032 B1 4/2001 Rosenberg et al.
6,223,100 B1 4/2001 Green
6,226,566 B1 5/2001 Funda et al.
6,228,089 B1 5/2001 Wahrburg
6,231,526 B1 5/2001 Taylor et al.
6,233,504 B1 5/2001 Das et al.
6,259,806 B1 7/2001 Green
6,285,902 B1 9/2001 Kienzle et al.
6,288,705 B1 9/2001 Rosenberg et al.
6,292,174 B1 9/2001 Mallett et al.
6,300,936 B1 10/2001 Braun et al.
6,322,467 B1 11/2001 Hook et al.
6,322,567 B1 11/2001 Mittelstadt et al.
6,325,808 B1 12/2001 Bernard et al.
6,337,994 B1 1/2002 Stoianovici et al.
6,366,273 B1 4/2002 Rosenberg et al.
6,369,834 B1 4/2002 Zilles et al.
6,377,011 B1 4/2002 Ben-Ur
6,377,839 B1 4/2002 Kalfas et al.
6,385,475 B1 5/2002 Cinquin et al.
6,385,509 B2 5/2002 Das et al.
6,393,340 B2 5/2002 Funda et al.
6,405,072 B1 6/2002 Cosman
6,405,158 B1 6/2002 Massie et al.
6,416,520 B1 7/2002 Kynast et al.
6,417,638 B1 7/2002 Guy et al.
6,421,048 B1 7/2002 Shih et al.
6,424,885 B1 7/2002 Niemeyer et al.
6,430,434 B1 8/2002 Mittelstadt
6,434,416 B1 8/2002 Mizoguchi et al.
6,434,507 B1 * 8/2002 Clayton A61B 17/32002 600/104
6,443,894 B1 9/2002 Sumanaweera et al.
6,466,815 B1 10/2002 Saito et al.
6,468,265 B1 10/2002 Evans et al.
6,491,699 B1 12/2002 Henderson et al.
6,493,608 B1 12/2002 Niemeyer
6,494,039 B2 12/2002 Pratt et al.
6,499,488 B1 12/2002 Hunter et al.
6,522,906 B1 * 2/2003 Salisbury, Jr. A61B 8/12 600/102
6,533,737 B1 3/2003 Brosseau et al.
6,546,277 B1 4/2003 Franck et al.
6,547,782 B1 4/2003 Taylor
6,551,325 B2 4/2003 Neubauer et al.
6,552,722 B1 4/2003 Shih et al.
6,583,161 B1 6/2003 Medina
6,642,686 B1 11/2003 Ruch
6,665,554 B1 12/2003 Charles et al.
6,671,651 B2 12/2003 Goodwin et al.
6,674,916 B1 1/2004 Deman et al.
6,676,669 B2 1/2004 Charles et al.
6,690,964 B2 2/2004 Bieger et al.
6,692,485 B1 2/2004 Brock et al.
6,701,174 B1 3/2004 Krause et al.
6,702,821 B2 3/2004 Bonutti
6,704,694 B1 3/2004 Basdogan et al.
6,711,431 B2 3/2004 Pratt et al.
6,711,432 B1 3/2004 Krause et al.
6,748,819 B2 6/2004 Maeguchi et al.
6,750,877 B2 6/2004 Rosenberg et al.
6,757,582 B2 6/2004 Brisson et al.
6,770,078 B2 8/2004 Bonutti
6,778,850 B1 8/2004 Adler et al.
6,785,572 B2 8/2004 Yanof et al.
6,786,896 B1 9/2004 Madhani et al.
6,799,065 B1 * 9/2004 Niemeyer A61B 1/00149 600/407
6,801,801 B1 10/2004 Sati
6,810,281 B2 10/2004 Brock et al.
6,816,148 B2 11/2004 Mallett et al.
6,831,640 B2 12/2004 Shih et al.
6,850,794 B2 2/2005 Shahidi
6,853,965 B2 2/2005 Massie et al.
6,858,003 B2 * 2/2005 Evans A61B 34/32 600/103
6,859,661 B2 2/2005 Tuke
6,877,239 B2 4/2005 Leitner et al.
6,894,678 B2 5/2005 Rosenberg et al.
6,920,347 B2 7/2005 Simon et al.
6,951,535 B2 * 10/2005 Ghodoussi G06F 19/3418 600/101
6,985,133 B1 1/2006 Rodomista et al.
6,987,504 B2 1/2006 Rosenberg et al.
7,001,346 B2 2/2006 White
7,035,716 B2 4/2006 Harris et al.
7,039,866 B1 5/2006 Rosenberg et al.
7,104,996 B2 9/2006 Bonutti
7,131,073 B2 10/2006 Rosenberg et al.
7,166,114 B2 * 1/2007 Moctezuma De La Barrera G06F 19/327 606/1
7,168,042 B2 1/2007 Braun et al.
7,199,790 B2 4/2007 Rosenberg et al.
7,206,626 B2 4/2007 Quaid, III
7,206,627 B2 4/2007 Abovitz et al.
7,217,276 B2 * 5/2007 Henderson A61B 19/52 600/429
7,225,115 B2 5/2007 Jones
7,302,288 B1 * 11/2007 Schellenberg A61B 90/36 600/427
7,491,198 B2 2/2009 Kockro
7,605,800 B2 10/2009 Rosenberg
7,660,623 B2 2/2010 Hunter et al.
7,683,565 B2 3/2010 Quaid et al.
7,742,804 B2 6/2010 Faul
7,747,311 B2 6/2010 Quaid, III
7,774,044 B2 8/2010 Sauer et al.
7,831,292 B2 11/2010 Quaid et al.
7,947,050 B2 5/2011 Lee et al.
7,947,051 B2 5/2011 Lee et al.
7,974,677 B2 7/2011 Mire et al.
7,996,110 B2 8/2011 Lipow et al.
8,005,571 B2 8/2011 Sutherland et al.
8,010,180 B2 8/2011 Quaid et al.
8,095,200 B2 1/2012 Quaid, III
8,100,133 B2 * 1/2012 Mintz B25J 9/0084 128/898
8,109,942 B2 2/2012 Carson
8,273,076 B2 * 9/2012 Devengenzo A61B 19/2203 128/852
8,287,522 B2 10/2012 Moses et al.
8,391,954 B2 3/2013 Quaid, II
8,571,628 B2 10/2013 Kang et al.
8,894,634 B2 11/2014 Devengenzo et al.
8,911,499 B2 12/2014 Quaid et al.
8,996,169 B2 3/2015 Lightcap et al.
9,002,426 B2 4/2015 Quaid et al.
9,259,276 B2 * 2/2016 Mintz B25J 9/0084
2001/0002830 A1 6/2001 Rahn et al.
2001/0034530 A1 10/2001 Malackowski et al.
2001/0036245 A1 11/2001 Kiele et al.
2001/0037064 A1 11/2001 Shahidi
2001/0039422 A1 11/2001 Carol et al.
2001/0041838 A1 11/2001 Holupka et al.
2002/0038085 A1 3/2002 Immerz
2002/0082498 A1 6/2002 Wendt et al.
2002/0107521 A1 8/2002 Petersen et al.
2002/0108054 A1 8/2002 Moore et al.
2002/0120188 A1 8/2002 Brock et al.
2002/0133174 A1 9/2002 Charles et al.
2003/0112281 A1 6/2003 Sriram et al.

(56) **References Cited**

U.S. PATENT DOCUMENTS

2003/0128187 A1 7/2003 Strubbe
2003/0209096 A1 11/2003 Pandey et al.
2004/0012806 A1 1/2004 Murata
2004/0024311 A1* 2/2004 Quaid, III A61B 34/20 600/428
2004/0034282 A1 2/2004 Quaid
2004/0034283 A1 2/2004 Quaid
2004/0034302 A1 2/2004 Abovitz
2004/0102866 A1 5/2004 Harris et al.
2004/0106916 A1* 6/2004 Quaid A61B 34/20 606/1
2004/0115606 A1 6/2004 Davies
2004/0127788 A1 7/2004 Arata
2004/0128026 A1 7/2004 Harris et al.
2004/0149087 A1 8/2004 Hsien
2004/0152972 A1* 8/2004 Hunter A61B 34/20 600/424
2004/0157188 A1 8/2004 Luth et al.
2004/0167654 A1 8/2004 Grimm et al.
2004/0171924 A1 9/2004 Mire et al.
2004/0236424 A1 11/2004 Berez et al.
2005/0001831 A1 1/2005 Shih et al.
2005/0013477 A1 1/2005 Ratti et al.
2005/0027397 A1 2/2005 Niemeyer
2005/0062738 A1 3/2005 Handley et al.
2005/0093821 A1 5/2005 Massie et al.
2005/0107801 A1 5/2005 Davies et al.
2005/5011367 5/2005 Davies et al.
2005/0137599 A1 6/2005 Masini
2005/0154471 A1 7/2005 Aram et al.
2005/0165489 A1 7/2005 Michelson
2005/0197800 A1 9/2005 Goodwin et al.
2005/0203384 A1 9/2005 Sati et al.
2005/0203539 A1 9/2005 Grimm et al.
2005/0215879 A1 9/2005 Chuanggui
2005/0222830 A1 10/2005 Massie et al.
2006/0033707 A1 2/2006 Rodomista et al.
2006/0058616 A1 3/2006 Marquart et al.
2006/0084867 A1 4/2006 Tremblay et al.
2006/0098851 A1 5/2006 Shoham et al.
2006/0109266 A1 5/2006 Itkowitz et al.
2006/0133827 A1 6/2006 Becouarn et al.
2006/0142657 A1* 6/2006 Quaid A61B 17/1764 600/424
2006/0293598 A1 12/2006 Fraser
2007/0055291 A1* 3/2007 Birkmeyer A61B 90/13 606/130
2007/0142751 A1 6/2007 Kang et al.
2007/0260140 A1 11/2007 Solar et al.
2007/0270685 A1 11/2007 Kang et al.
2008/0004632 A1 1/2008 Sutherland et al.
2008/0004633 A1 1/2008 Arata et al.
2008/0010705 A1 1/2008 Quaid et al.
2008/0010706 A1 1/2008 Moses et al.
2008/0013958 A1* 1/2008 Katsuki H04B 10/1143 398/130
2008/0058945 A1 3/2008 Hajaj et al.
2009/0000626 A1 1/2009 Quaid et al.
2009/0000627 A1 1/2009 Quaid et al.
2009/0012531 A1 1/2009 Quaid et al.
2009/0012532 A1 1/2009 Quaid et al.
2009/0036902 A1* 2/2009 DiMaio A61B 19/2203 606/130
2009/0306499 A1 12/2009 Van Vorhis et al.
2010/0137882 A1 6/2010 Quaid et al.
2011/0082462 A1 4/2011 Suarez et al.
2011/0082468 A1 4/2011 Hagag et al.
2011/0082587 A1 4/2011 Ziaei et al.
2011/0213383 A1 9/2011 Lee et al.
2012/0059390 A1 3/2012 Mintz et al.
2012/0109150 A1 5/2012 Quaid et al.
2012/0109152 A1 5/2012 Quaid, III
2012/0176306 A1 7/2012 Lightcap et al.
2013/0053648 A1 2/2013 Abovitz et al.
2013/0096573 A1 4/2013 Kang et al.
2013/0096574 A1 4/2013 Kang et al.
2013/0345718 A1* 12/2013 Crawford A61B 17/025 606/130
2014/0228631 A1* 8/2014 Kwak A61B 19/2203 600/102
2014/0330073 A1* 11/2014 Ko A61B 19/2203 600/103
2015/0073437 A1 3/2015 Devengenzo et al.
2015/0320500 A1 11/2015 Lightcap et al.
2016/0228204 A1 8/2016 Quaid et al.

FOREIGN PATENT DOCUMENTS

EP 1380266 A1 1/2004
EP 1574186 6/2008
JP 09330016 A 12/1997
JP 2000279425 A 10/2000
JP 2003053684 2/2003
WO WO9501757 A1 1/1995
WO WO9617552 A1 6/1996
WO WO0035336 A2 6/2000
WO WO0200131 A1 1/2002
WO WO0224051 A1 3/2002
WO WO02060653 A2 8/2002
WO WO02061371 A1 8/2002
WO WO02061688 8/2002
WO WO03077101 A2 9/2003
WO WO2004069036 A2 8/2004
WO WO2004069040 A2 8/2004
WO WO2004069041 A2 8/2004
WO WO2004070573 A2 8/2004
WO WO2004070577 A1 8/2004
WO WO2004070580 A2 8/2004
WO WO2004070581 8/2004
WO WO2004075987 A1 9/2004
WO WO2005009215 A 2/2005
WO WO2005072629 8/2005
WO WO2005091220 A1 9/2005
WO WO2005120380 A1 12/2005
WO WO2005122916 A1 12/2005
WO WO2006004894 A2 1/2006
WO WO2006091494 A1 8/2006
WO WO2007117297 A2 10/2007

OTHER PUBLICATIONS

Burghart, et al., Robot Controlled Osteotomy in Craniofacial Surgery, 1st International Workshop on Haptic Devices in Medical Applications Proceedings, Institute for Process Control and Robotics, Jun. 23, 1999, 13 pages.

Davies, B., Computer-assisted and robotics surgery, International Congress and Symposium Series No. 223, 1997, Royal Society of Medicine Press Limited, 12 pages.

Harris, et al., Experiences with Robotic Systems for Knee Surgery, CVR Med-MRCAS'97 Proceedings of the First Joint Conference on Computer Vision, Virtual Realty, and Robotics in Medicine and Medial Robotics and Computer-Assisted Surgery, Mar. 1997, Springer, 11 pages.

Acosta, et al., "Development of a Haptic Virtual Environment", Computer-Based Medical Systems, Proceedings 12th IEEE Symposium, pp. 35-39, 1999.

Bettini. A., et al., "Vision Assisted Control for Manipulation Using Virtual Fixtures," proceedings of the 2001 Institute of Electrical and Electronics Engineers International Conference on Intelligent Robots and Systems, Oct. 29-Nov. 3, 2001, pp. 1171-1176.

Chen et al., "Force Feedback for Surgical Simulation," Proceedings of the IEEE, New York, US, vol. 86, No. 3, Mar. 1, 1998. pp. 524-530.

Colgate, J. Edward, et al., "Cobots: Robots for Collaboration with Human Operators," proceedings of International Mechanical Engineering Congress & Exhibition, DSC-vol. 58, 1996, pp. 433-439.

Davies et al, "Acrobot-using Robots and Surgeons Synergistically in Knee Surgery", 1997 British Crown Copyright, 173-178.

(56) **References Cited**

OTHER PUBLICATIONS

Fritz, et al,, "Design of a Haptic Data Visualization System for Peopie with Visual Impairments", IEEE Trans, on Rehabiliation Engineering, vol. 7, No. 3, pp. 372-384 (1999).
Leeser, Karl, et al., "Control and Exploitation of Kinematic Redundancy in Torque-Controliable Manipulators via Multiple-Jacobian Superposition," to the International Conf. on Field & Service Robotics, Dec. 8-10, 1997, 7 pages.
London Press Services, "'Acrobot' capable of delicate knee surgery," Can. Med. Assoc. J., Jun. 15, 1997, 156(12), p. 1690.
Matsuoka, Yoky, et al., "Design of Life-Size Haptic Environments," Experimental Robotics VII, 2001, pp. 461-470.
Moore, Carl A., et al., "Cobot Implementation of 3D Virtual Surfaces," proceedings of the 2002 Institute of Electrical and Electronics Engineers International Conference on Robotics & Automation, May 2002, pp. 3242-3247.
Niki, et al., "Simple Haptic Display and Object Data Design", Proceedings of the 2000 IEEE/RSJ International Conference on Intelligent Robots and Systems, pp. 967-972, 2000.
Otmane, S., et al., "Active Virtual Guides as an Apparatus for Augmented Reality Based Telemanipulation System on the Internet," presented at Institute of Electrical and Electronics Engineers Computer Society 33rd Annual Simulation Symposium ANSS 2000, held Apr, 16-20, 2000, pp. 185-191.
Press Release, "The Acrobot Company Wins Best Surgical Innovation Award," Acrobot Precision Surgical Systems, May 24, 2002, 1 page.
Quaid, Arthur E., et al., "FGS WAM: First Cadaver Trial," Z-Kat, Inc. Confidential Material, Sep. 28, 2001, pp. 1-7.
Quaid, Arthur E.r et al., "FGS WAM: Integration of Fluorotactic Guidance with the Whole-Arm Manipulator," Z-Kat, Inc. Confidential Material, Dec. 28, 2000, pp. 1-6.
Rosenberg, "Virtual Fixtures: Perceptual Tools for Telerobotic Manipulation", 1993 IEEE, 76-82.
Sayers, Craig P., et al., "An Operator Interface for Teleprogramming Employing Synthetic Fixtures," to appear in Presence, Special Issue on Networked Virtual Environments and Teleoperation, Jun. 1994, pp. 1-27.
Schneider, O., et al., "Synergistic Robotic Assistance to Cardiac Procedures," presented to Computer Assisted Radiology and Surgery on Jun. 23-26, 1999, 5 pages.
Sensable Technologies, Inc., "Freeform Feel the Difference", 2001, 4 pages.
Sensable Technologies, Inc., "FreeForm Modeling—Technical Features," 2003, 2 pages.
Tognetti, Lawrence Joseph, "Actuator Design for a Passive Haptic Display," Georgia Institute of Technology, Jun. 1999, 33 pages.
World Wide Web, http://haptics.me.jhu.edU/r.sub.-hapt.html, "Haptic Interfaces and Virtual Environments," printed on Jun. 12, 2003, 2 pages.
World Wide Web, http://haptics.me.jhu.edU/r.sub.-kine.html, "Robot Design and Kinematics," printed on Jun. 12, 2003, 2 pages.
World Wide Web, http://www.acrobot.co.uk/background.html, "The Acrobot Company Limited—Background," printed on Jul. 10, 2002, 1 page.
World Wide Web, http://www.acrobot.co.uk/home.html, "The Acrobot Company Limited—Precision Surgical Systems," printed on Jul. 10, 2002, 1 page.
World Wide Web, http://www.acrobot.co.uk/meetings.html, "The Acrobot Company Limited—Meetings and Publications," printed on Jul. 10, 2002, pp. 1-3.
World Wide Web, http://www.acrobot.co.uk/products.html, "The Acrobot Company Limited—Products," printed on Jul. 10, 2002, pp. 1-6.
World Wide Web, http://www.fcs-cs.com/robotics/content/assistance.htm, "Surgical Assistance," printed on Jun. 12, 2003, 1 page.
World Wide Web, http://www.fcs-cs.com/robotics/content/design.htm, "Virtual Design, Assembly & Maintenance," printed on Jun. 12, 2003, 1 page.
World Wide Web, http://www.fcs-cs.com/robotics/content/endeffectors.htm, "End effectors," printed on Jun. 12, 2003, 1 page.
World Wide Web, http://www.fcs-cs.com/robotics/content/hapticmaster.htm, "HapticMASTER", printed on Jun. 12, 2003, 1 page.
World Wide Web, http://www.fcs-cs.com/robotics/content/reality.htm, "Virtual Reality," printed on Jun 12, 2003, 1 page.
World Wide Web, http://www.fcs-cs.com/robotics/content/rehabilitation.htm, "Rehabilitation," printed on Jun. 12, 2003, 1 page.
World Wide Web, http://www.fcs-cs.com/robotics/content/research.htm, "Research," printed on Jun. 12, 2003, 1 page.
World Wide Web, http://www.fcs-cs.com/robotics/content/simulation.htm, "Simulation & Training," printed on Jun. 12, 2003, 1 page.
World Wide Web, http://www fcs-cs.com/robotics/content/software.htm, "Software," printed on Jun. 12, 2003, 1 page.
World Wide Web, http://www.merl.com/projects/surgSim99/, "Knee Arthroscopy Simulation," printed on Jun. 12, 2003, 2 pages.
Zilles, et al., "A Constraint-Based God-object Method for Haptic Display", IEEE Proceedings, pp. 146-151, 1995.
Abovitz et al., "The Future Use of Networked Haptic Learning Information Systems in Computer-Assisted Surgery," CAOS 2001, Jul. 6-fl, 2001, pp. 337-338.
Abovitz, "Digital surgery: the future of medicine and human-robot symbiotic Interaction," Industrial Robot: An International Journal, Oct. 2001, vol. 28, Issue 5, pp. 401-408 (abstract only).
Bennett et al., Autonomous Calibration of Single-Loop Kinematic Chains Formed by Manipulators With Passive End-Point Constraints,' IEEE Transactions on Robotics and Automation, vol. 7, pp. 597-606, 1991.
Bettini et al., "Vision assisted control for manipulation using virtual fixtures: Experiments at macro and micro scales," in Proc. 2002 IEEE Intl. Conf. on Robotics and Automation, (Washington, DC), May 2002.
Cobb et al., "A robotic system for TKR surgery," in Third Annual North American Program on Computer Assisted Orthopaedic Surgery, (Pittsburgh. PA), pp. 71-74, Jun. 1999.
Davies et al., "The use of force control in robot assisted knee surgery," in Proceedings of the First Annual Symposium on Medical Robotics and Computer Assisted Surgery, vol. 2, (Pittsburgh, PA), pp. 258-262, Sep. 1994.
Goswami, et al., "Complete Parameter Identification of a Robot Using Partial Pose Information," IEEE Control Systems Magazine, Oct. 1993.
Leeser et al.. "Computerassisted teach and play: Novel user-friendly robot teach mode using gravity compensation and backdrivability," in Proceedings of the Robotics International/SME Fifth World Conference on Robotics Research, (Cambridge. MA), Sep. 1994.
Meggiolaro, et al., "Manipulator calibration using a single endpoint contact constraint," in 26th ASME Biennial Mechanisms Conference, (Baltimore, MD), 2000.
Park et al.. "Virtual fixtures for robotic cardiac surgery," in Proc. Medical Image Computing and Computer-Assisted Intervention, (Utrecht, Netherlands), Oct 2001.
Roche, "Changing the way surgeons plan and execute minimally invasive unicompartmental knee surgery," Orthopaedic Product News, pp. 16-18, Jul./Aug. 2006.
Rosenberg. Virtual Fixtures: Perceptual overlays enhance operator performance in telepresence tasks. PhD thesis, Stanford University, Aug. 1994.
Quaid, et al., "The Use of Haptic Information Displays for Assisting in the Execution of Image-Guided Surgery Plans," Syllabus of the Computer Assisted Orthopaedic Surgery Meeting, Jul. 2001, pp. 338-340.
Quaid et al., "Haptic Informaiton Displays for Computer-Assisted Surgery," Proceedings of trie 2002 IEEE International Conference on Robotics & Automation, May 2002, pp. 2092-2097.
Townsend et al., "Teleoperator slave—WAM design methodology." Industrial Robot, vol. 26. No. 3, pp. 167-177, 1999.
Kanazides, Peter et al., "An Integrated System for Cementless Hip Replacement". Integrated Surgical Systems Department of Orthopedic Surgery, Sutter General Hospital, May/Jun. 1995, pp. 307-313.

(56) **References Cited**

OTHER PUBLICATIONS

Taylor, Russell et al., "Redundant Consistency Checking in a Precise Surgical Robot". Annual International Conference of the IEEE Engineering in Medicine and Biology Society, vol. 12, No. 5, 1990, pp. 1933-1935.
Taylor, Russell et al., "An Image-Directed Robotic System for Precise Orthopaedic Surgery", IEEE Transactions on Robotics and Automation, vol. 10, No. 3, Jun. 1994, p. 3, 261-275.
Taylor, Russell et a!., "Robotic Joint Replacement Surgery", NSF Engineering Research Center for Computer-Integrated Surgical Systems and Technology. 2000. 2001, 2004.
Hollerbach, J.M. & D. E Johnson. Virtual Environment Rendering. To appear in Human and Machine Haptics, M. Lutkosky, R. Howe, K. Salisbury, and M. Srinivasan (eds.), MIT Press, 2000 (available at http://www.cs.ubc.ca/labs/spin/publIcatIons/related/hollerbach00.pdf).
Abovitz, "Human-Interactive Medical Robotics," CAOS 2000, Jun. 15-17, 2000, pp. 71-72.
Abovitz, "Human-Interactive Medical Robotics," CAOS 2001, Jul. 6-8, 2001 .pp. 81-82.
PCT Search Report dated May 8, 2008 for corresponding PCT Application No: PCT/US2006/049216 (2 pages).
Ho, S.C. et al., "Robot Assisted Knee Surgery Establishing a Force Control Strategy Incorporating Active Motion COnstraint," IEEE Engineering in Medicine and Biology Magazine, vol. 14, No. 3, May 1, 1995, col. 2-3, p. 293.
PCT/US2006/049216, Partial Intl. Search Report, Jan. 18, 2008 (2Pgs.).

* cited by examiner

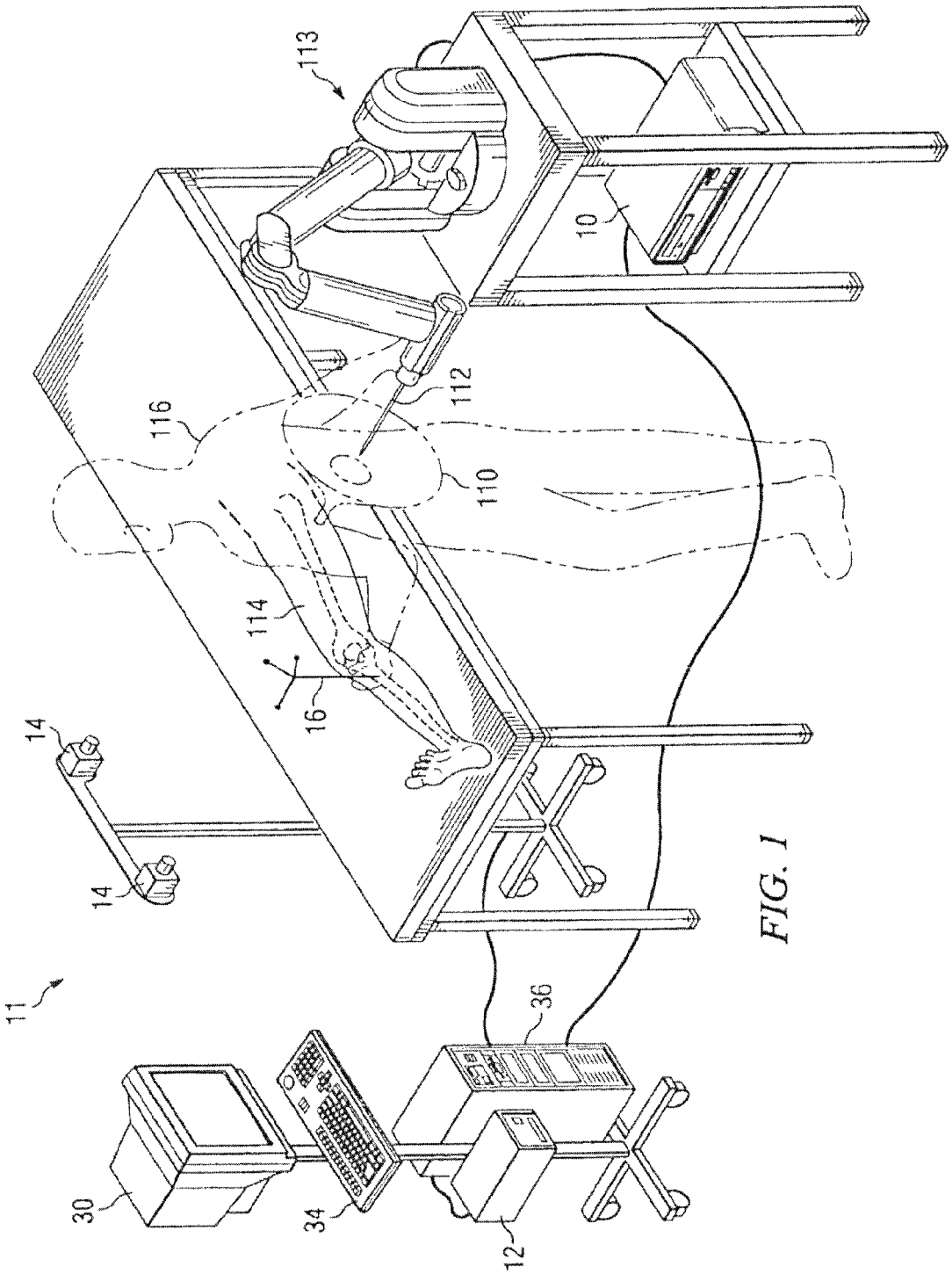

FIG. 1

FIG. 2

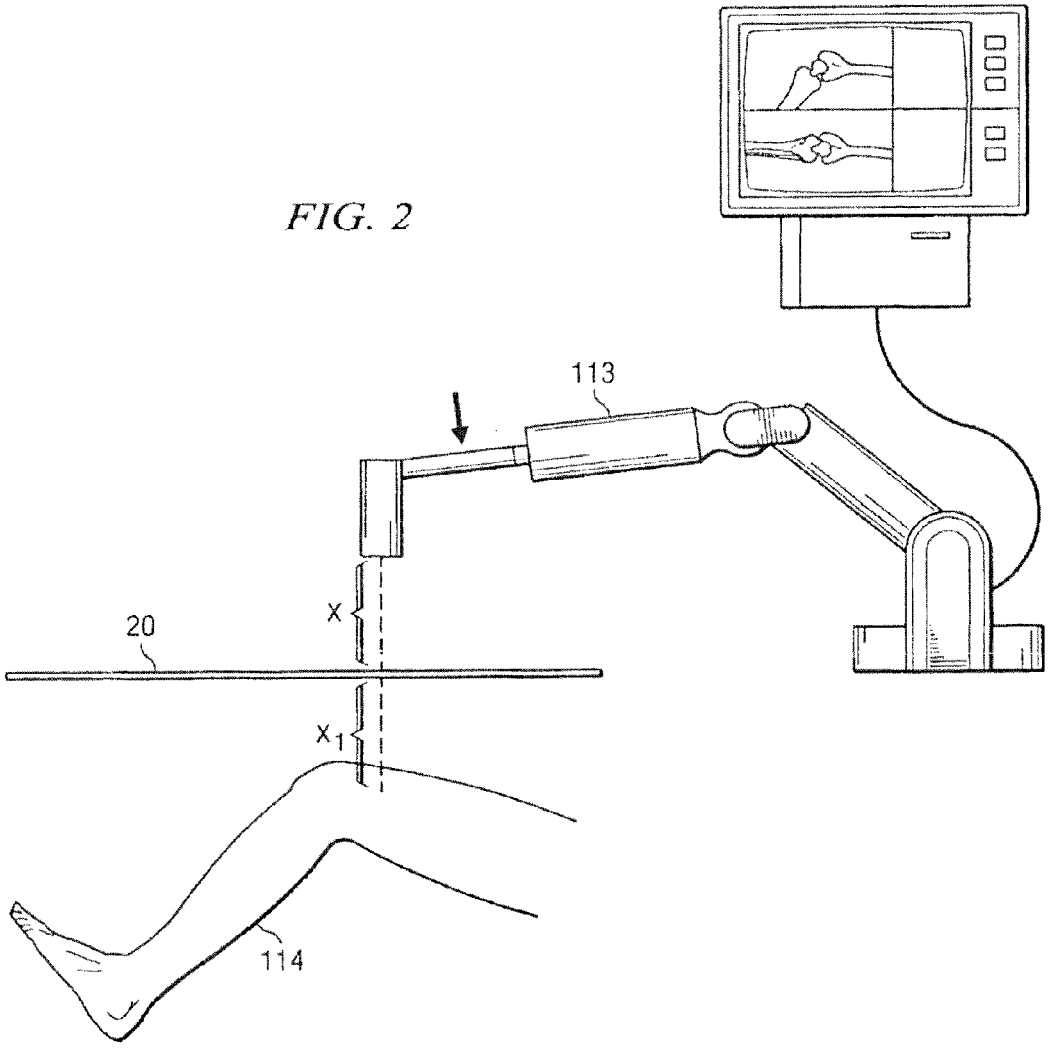

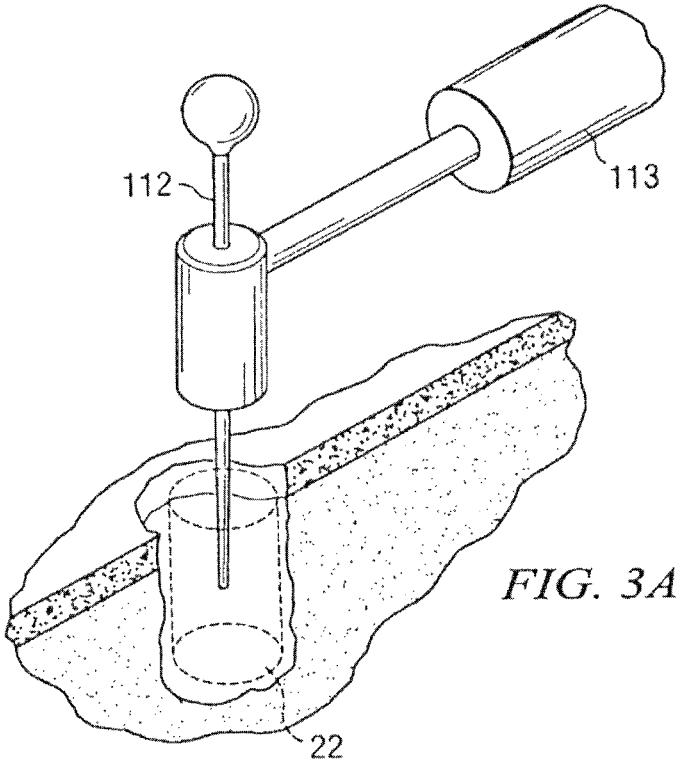

FIG. 3A

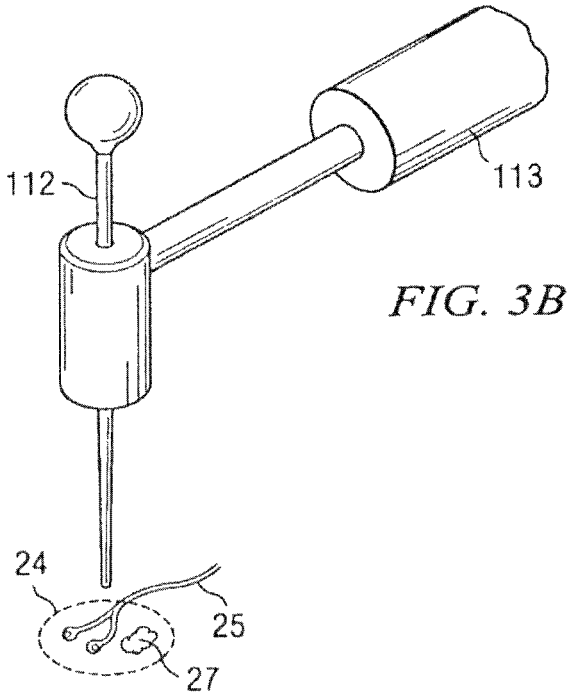

FIG. 3B

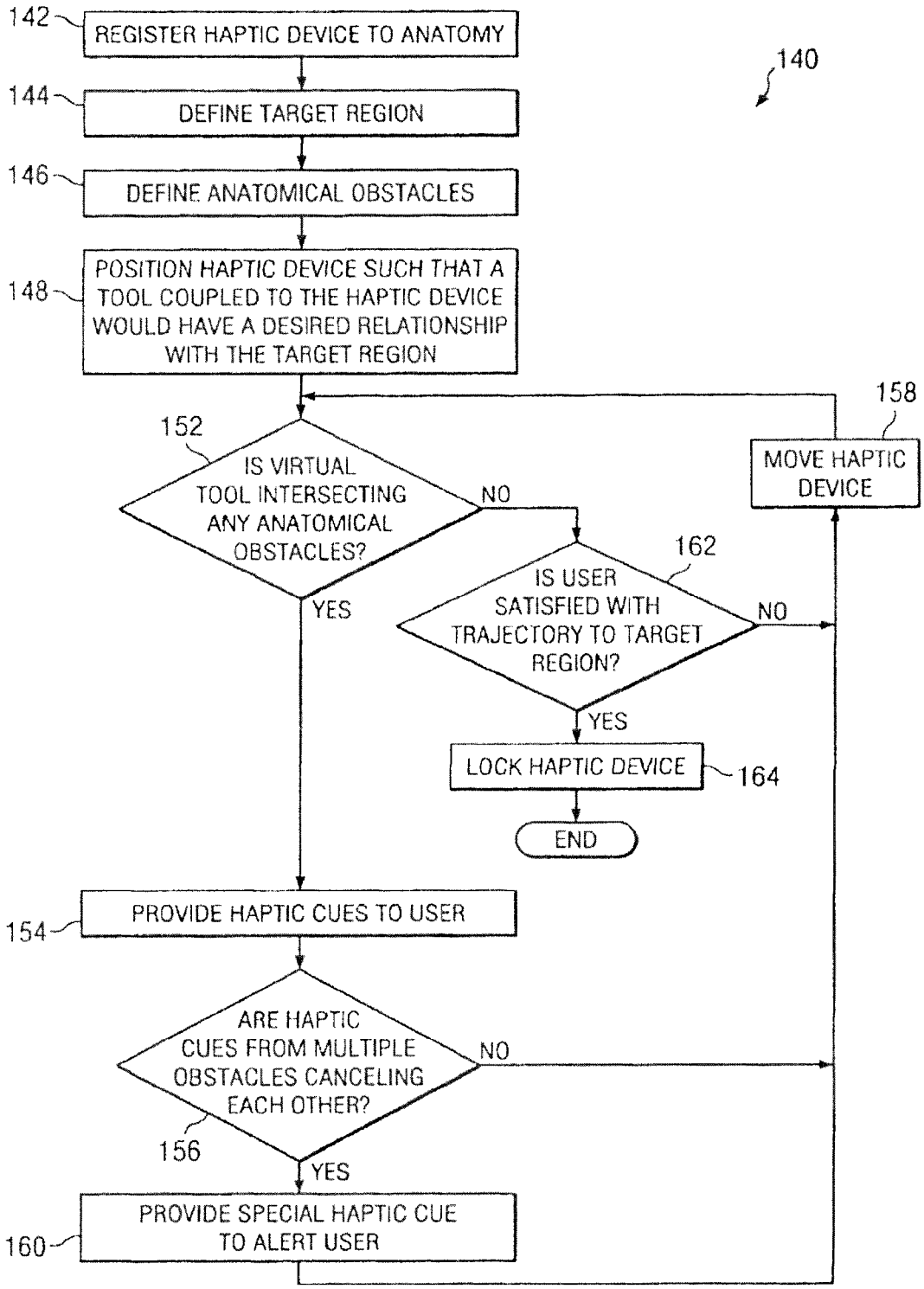
142
REGISTER HAPTIC DEVICE TO ANATOMY
140
144
DEFINE TARGET REGION
146
DEFINE ANATOMICAL OBSTACLES
148
POSITION HAPTIC DEVICE SUCH THAT A TOOL COUPLED TO THE HAPTIC DEVICE WOULD HAVE A DESIRED RELATIONSHIP WITH THE TARGET REGION
158
152
IS VIRTUAL TOOL INTERSECTING ANY ANATOMICAL OBSTACLES?
NO
MOVE HAPTIC DEVICE
162
IS USER SATISFIED WITH TRAJECTORY TO TARGET REGION?
NO
YES
YES
LOCK HAPTIC DEVICE
164
END
154
PROVIDE HAPTIC CUES TO USER
ARE HAPTIC CUES FROM MULTIPLE OBSTACLES CANCELING EACH OTHER?
NO
156
YES
160
PROVIDE SPECIAL HAPTIC CUE TO ALERT USER

FIG. 3C

FIG. 4A

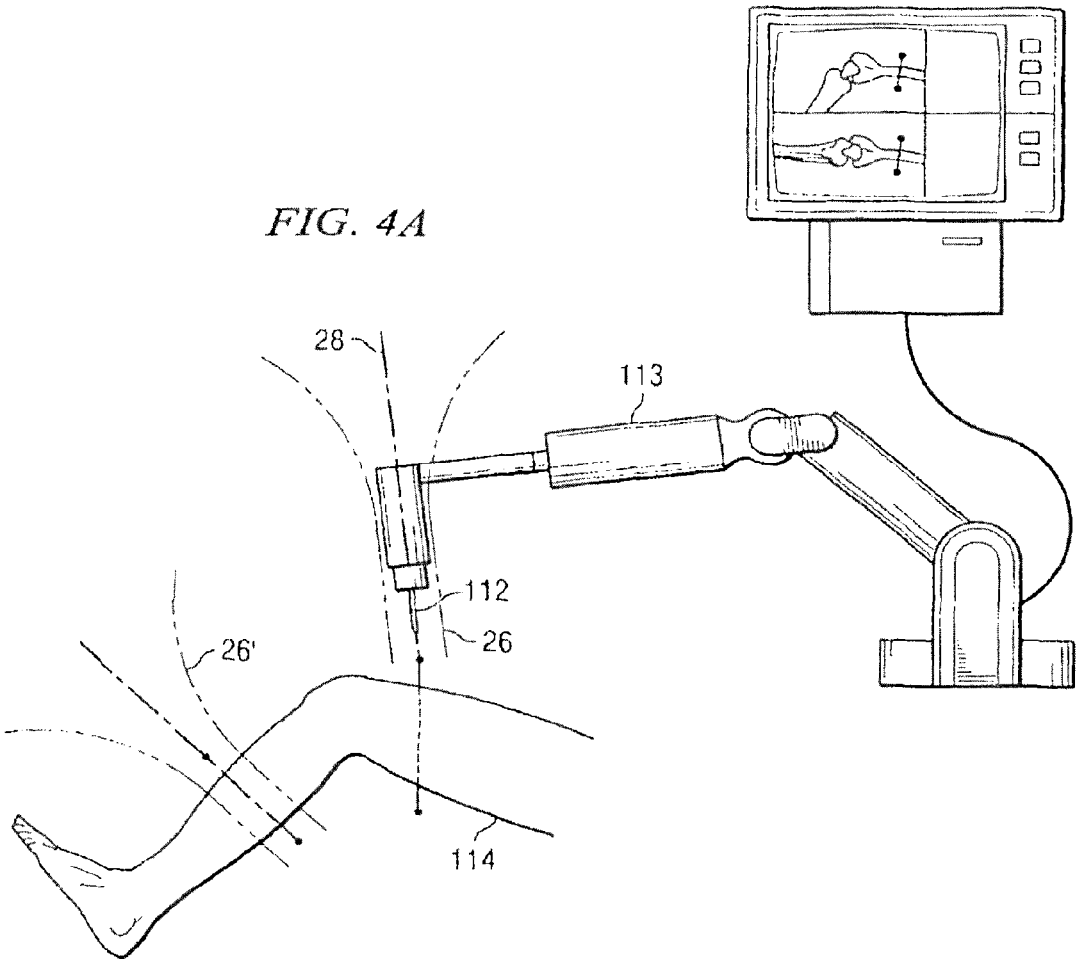

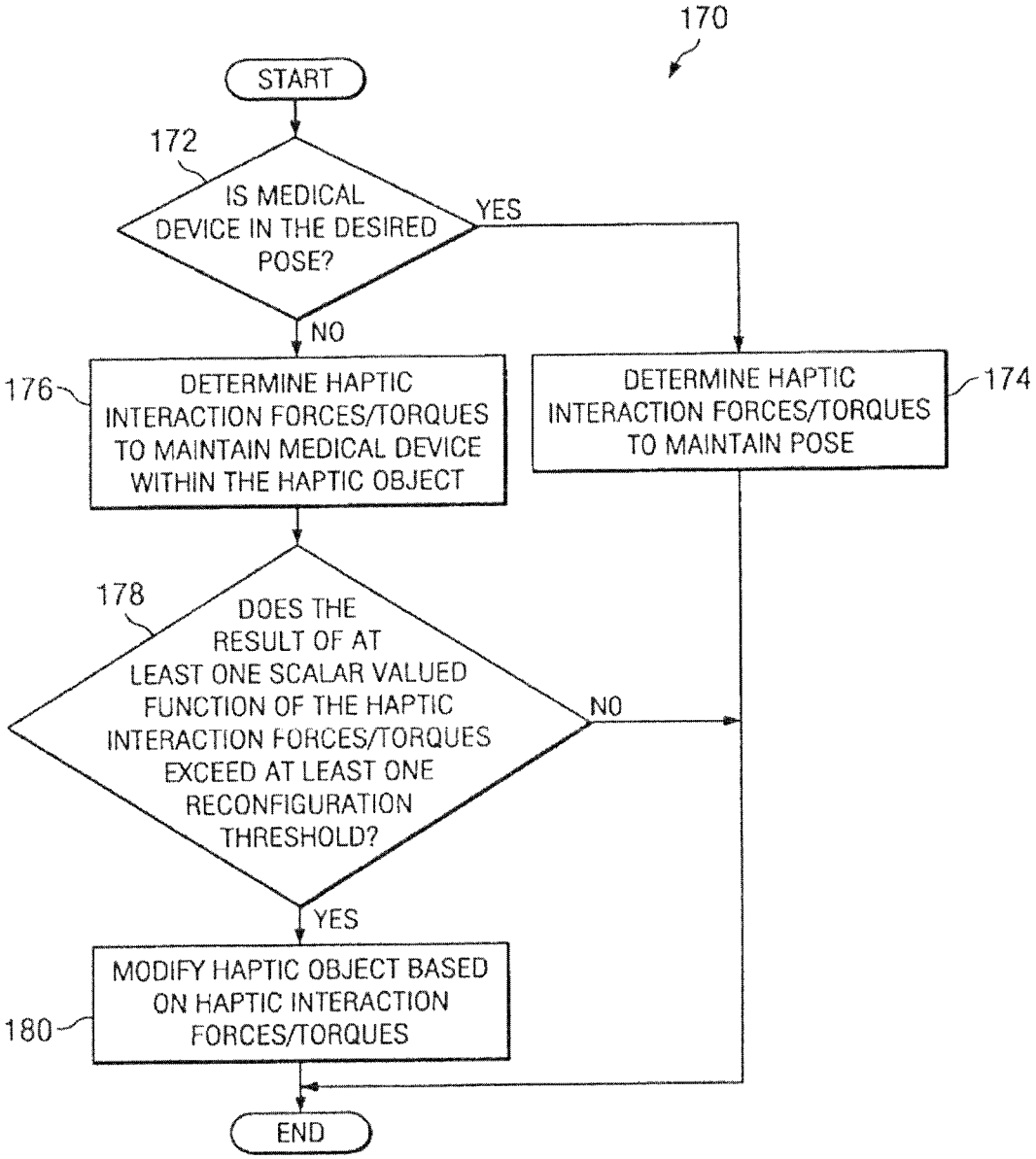
170
START
172
IS MEDICAL DEVICE IN THE DESIRED POSE?
YES
NO
176
DETERMINE HAPTIC INTERACTION FORCES/TORQUES TO MAINTAIN MEDICAL DEVICE WITHIN THE HAPTIC OBJECT
DETERMINE HAPTIC INTERACTION FORCES/TORQUES TO MAINTAIN POSE
174
178
DOES THE RESULT OF AT LEAST ONE SCALAR VALUED FUNCTION OF THE HAPTIC INTERACTION FORCES/TORQUES EXCEED AT LEAST ONE RECONFIGURATION THRESHOLD?
NO
YES
MODIFY HAPTIC OBJECT BASED ON HAPTIC INTERACTION FORCES/TORQUES
180
END

FIG. 4B

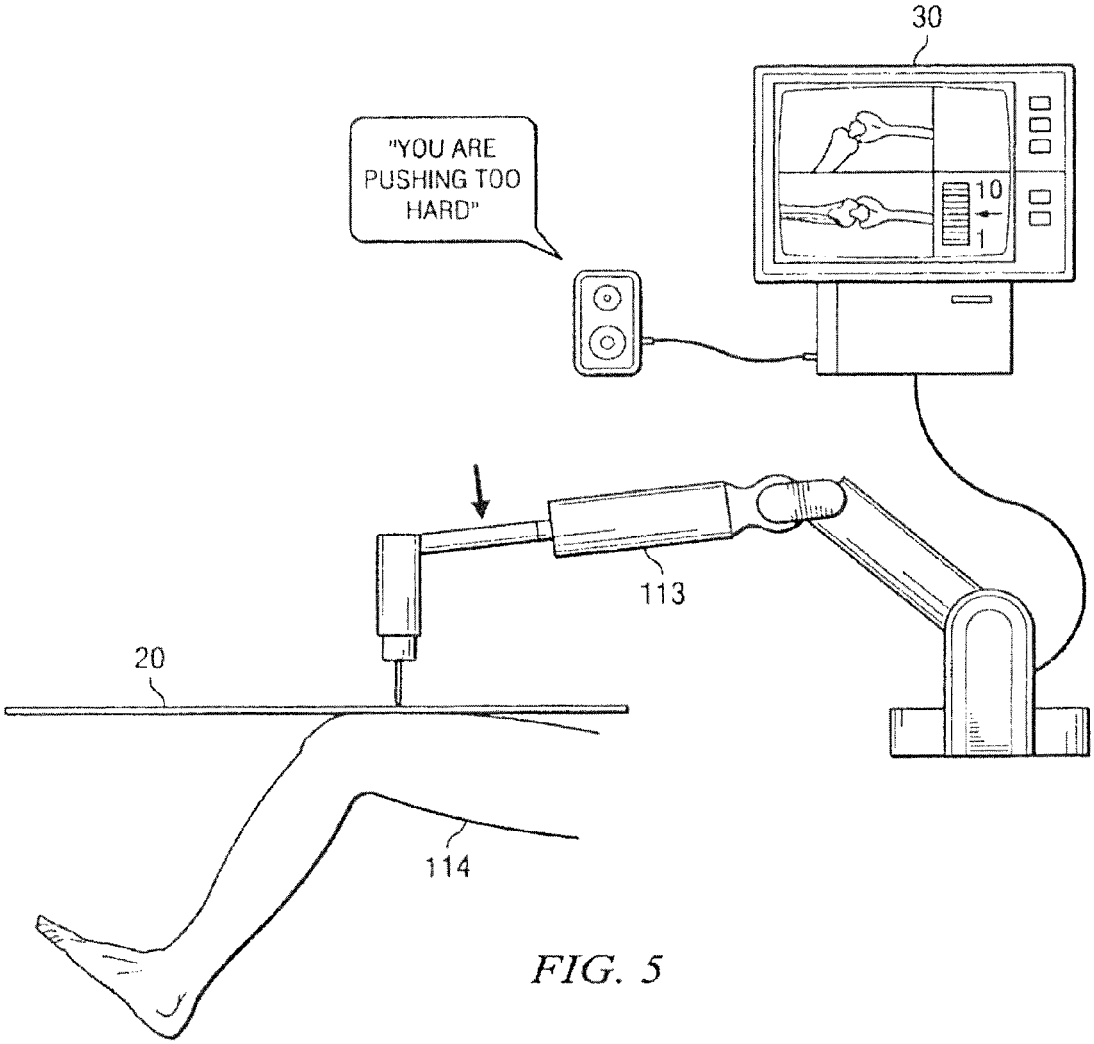

FIG. 5

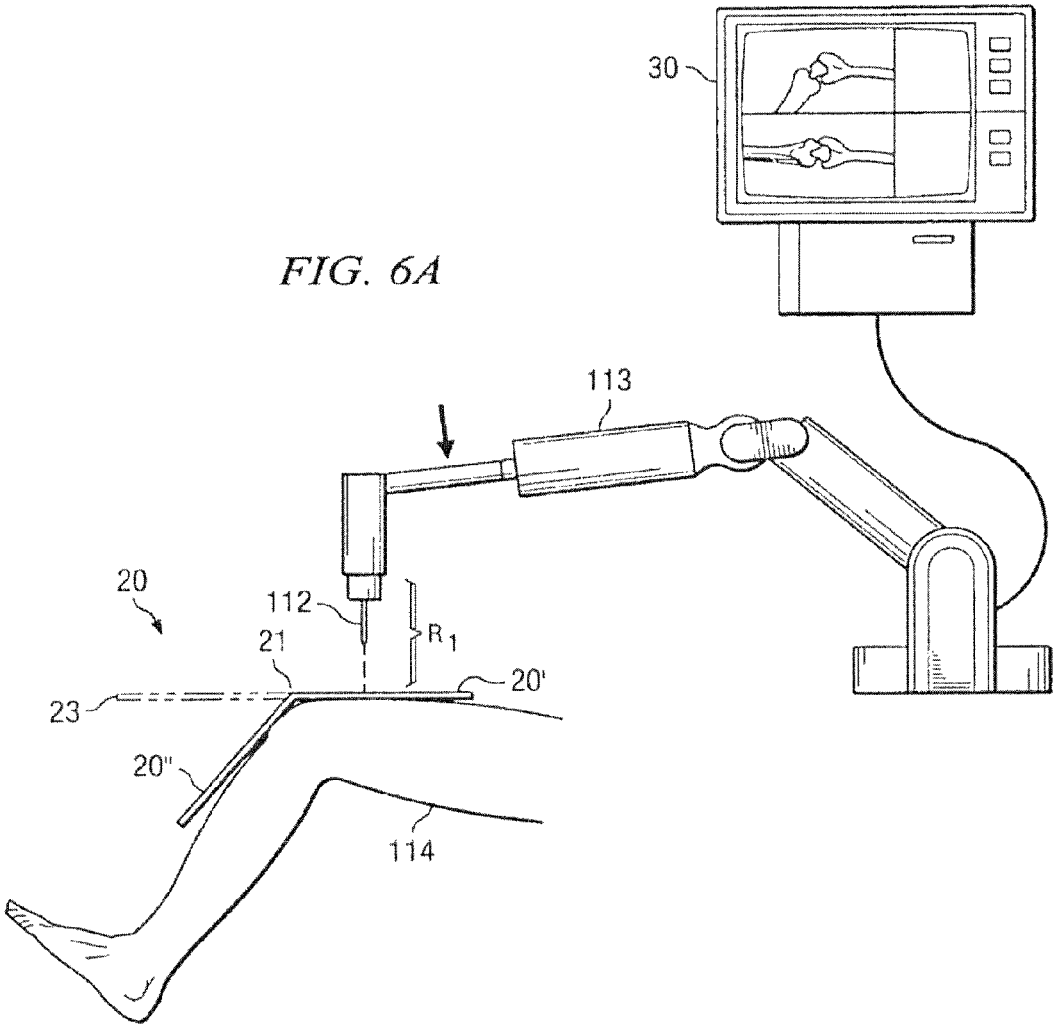

FIG. 6A

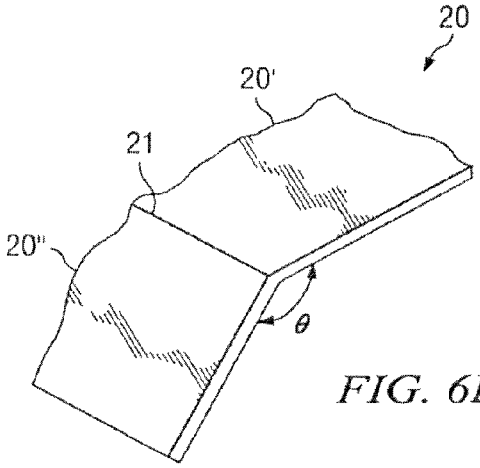

FIG. 6B

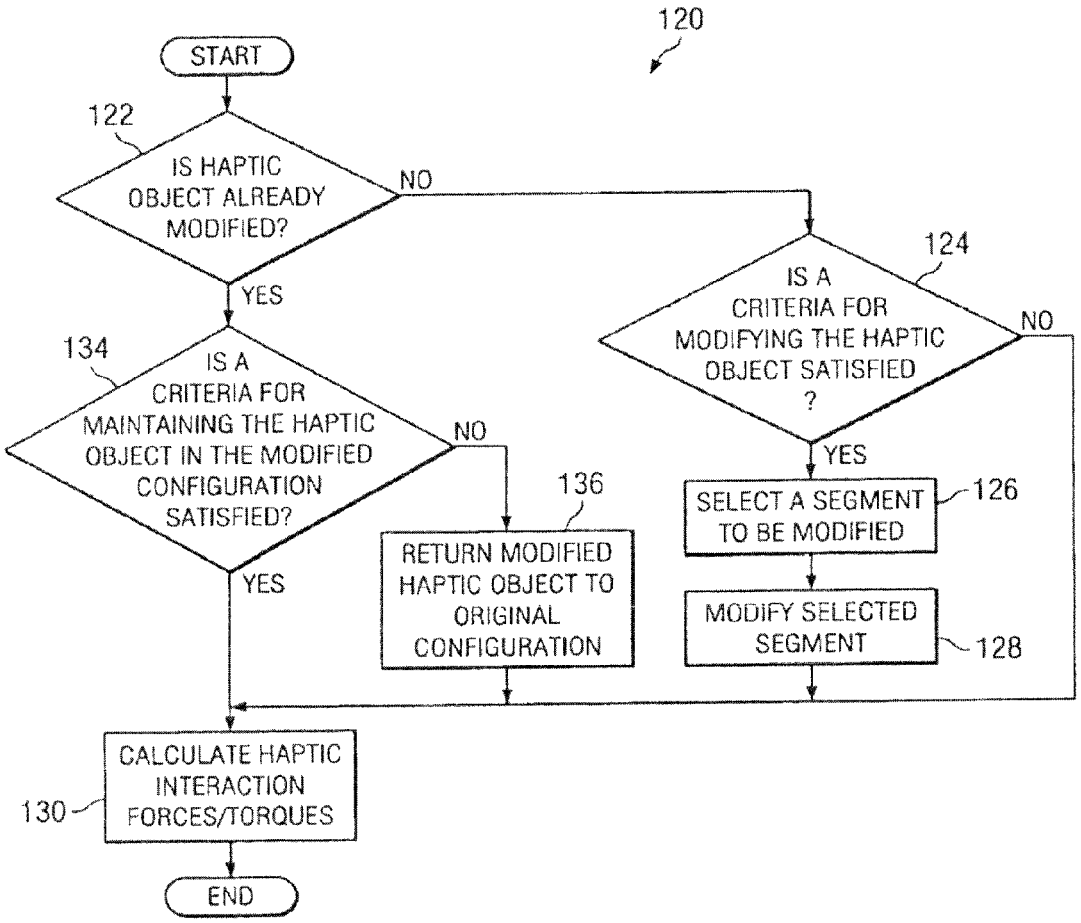
120
START
122
IS HAPTIC OBJECT ALREADY MODIFIED?
NO
YES
124
IS A CRITERIA FOR MODIFYING THE HAPTIC OBJECT SATISFIED ?
NO
YES
134
IS A CRITERIA FOR MAINTAINING THE HAPTIC OBJECT IN THE MODIFIED CONFIGURATION SATISFIED?
NO
YES
136
RETURN MODIFIED HAPTIC OBJECT TO ORIGINAL CONFIGURATION
SELECT A SEGMENT TO BE MODIFIED
126
MODIFY SELECTED SEGMENT
128
CALCULATE HAPTIC INTERACTION FORCES/TORQUES
130
END

FIG. 6C

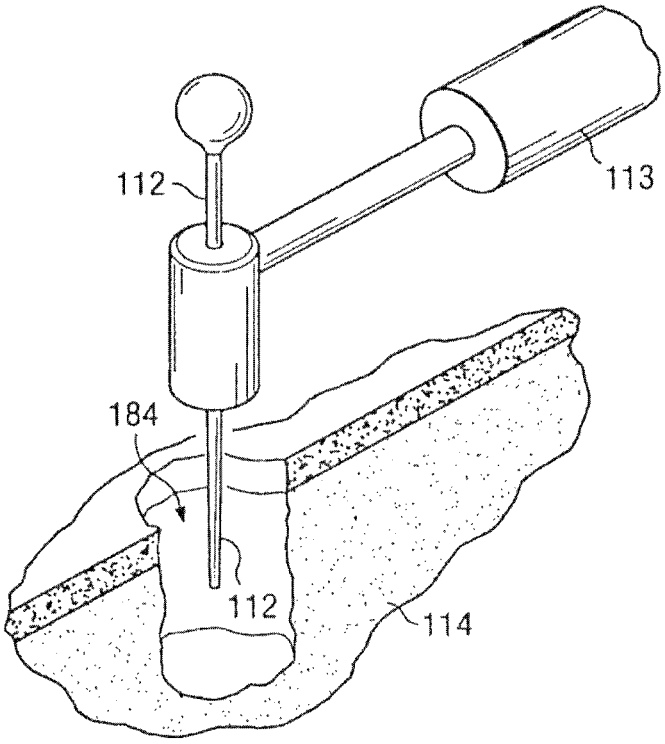

FIG. 7A

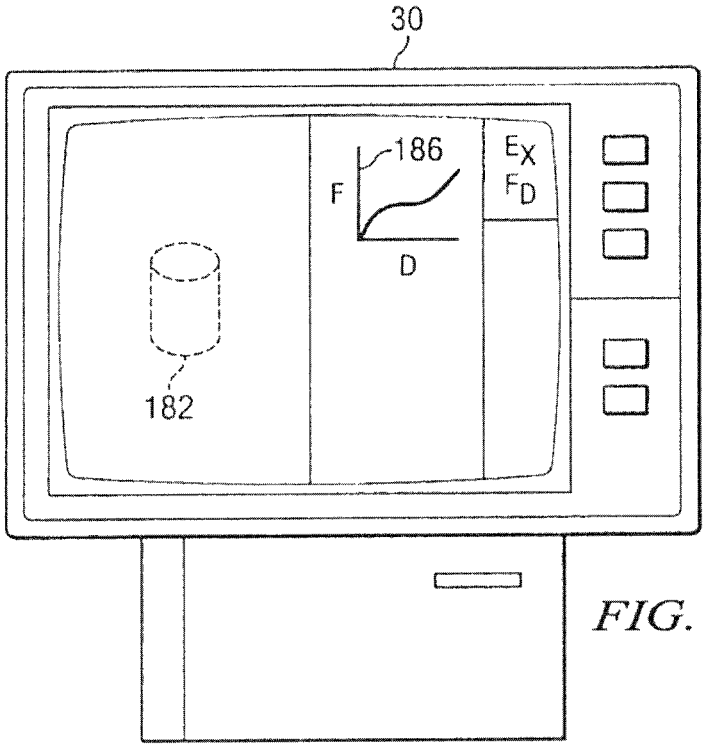

FIG. 7B

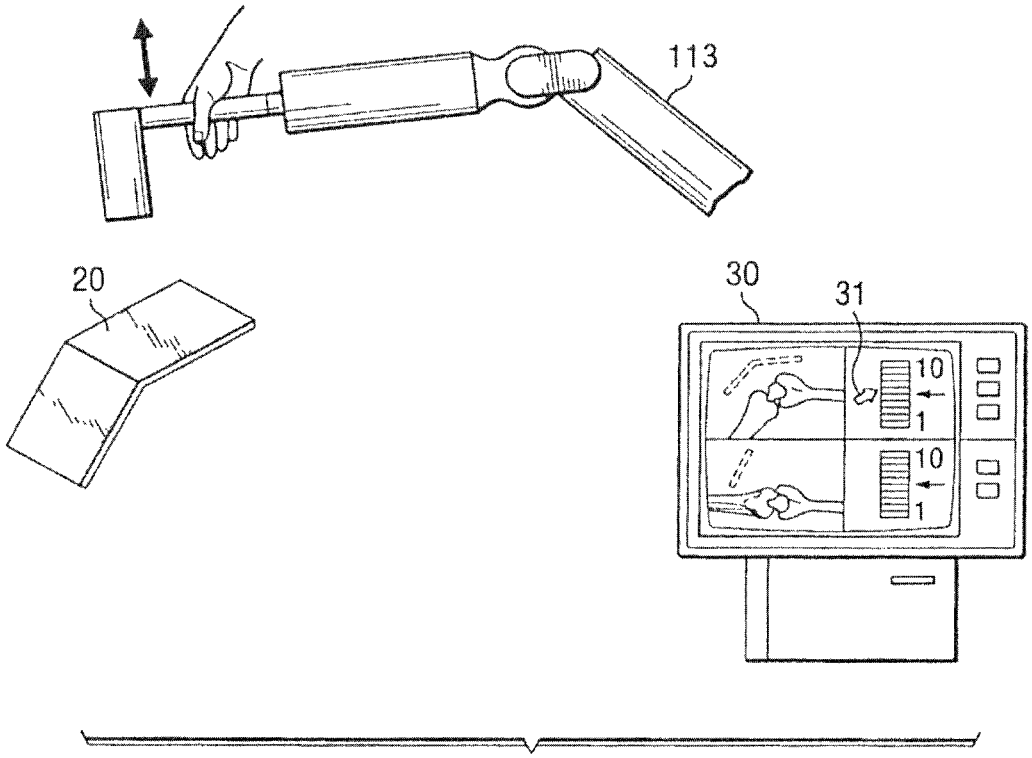

FIG. 8

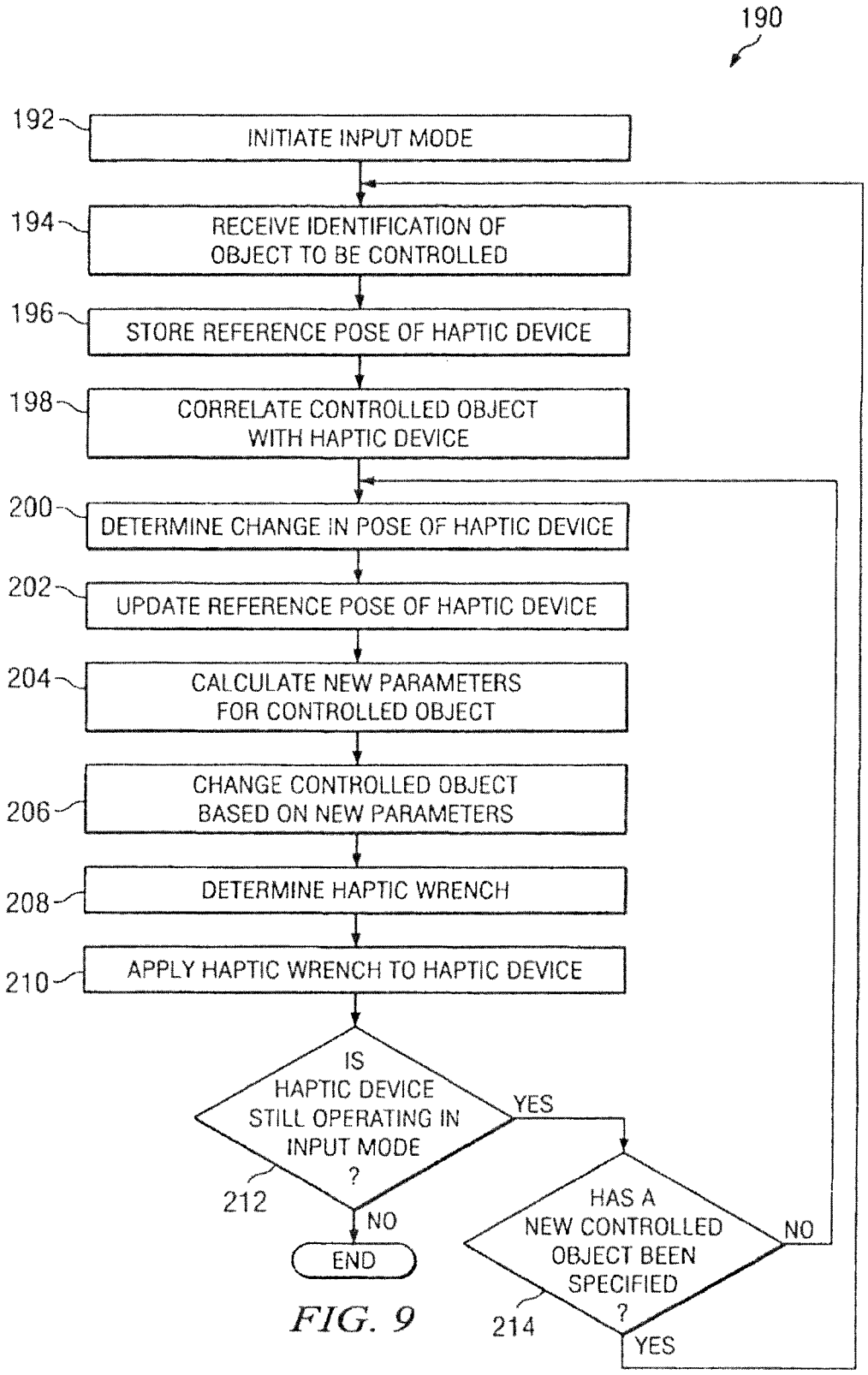
190
192
INITIATE INPUT MODE
194
RECEIVE IDENTIFICATION OF OBJECT TO BE CONTROLLED
196
STORE REFERENCE POSE OF HAPTIC DEVICE
198
CORRELATE CONTROLLED OBJECT WITH HAPTIC DEVICE
200
DETERMINE CHANGE IN POSE OF HAPTIC DEVICE
202
UPDATE REFERENCE POSE OF HAPTIC DEVICE
204
CALCULATE NEW PARAMETERS FOR CONTROLLED OBJECT
206
CHANGE CONTROLLED OBJECT BASED ON NEW PARAMETERS
208
DETERMINE HAPTIC WRENCH
210
APPLY HAPTIC WRENCH TO HAPTIC DEVICE
IS HAPTIC DEVICE STILL OPERATING IN INPUT MODE ?
212
YES
NO
END
HAS A NEW CONTROLLED OBJECT BEEN SPECIFIED ?
214
NO
YES

FIG. 9

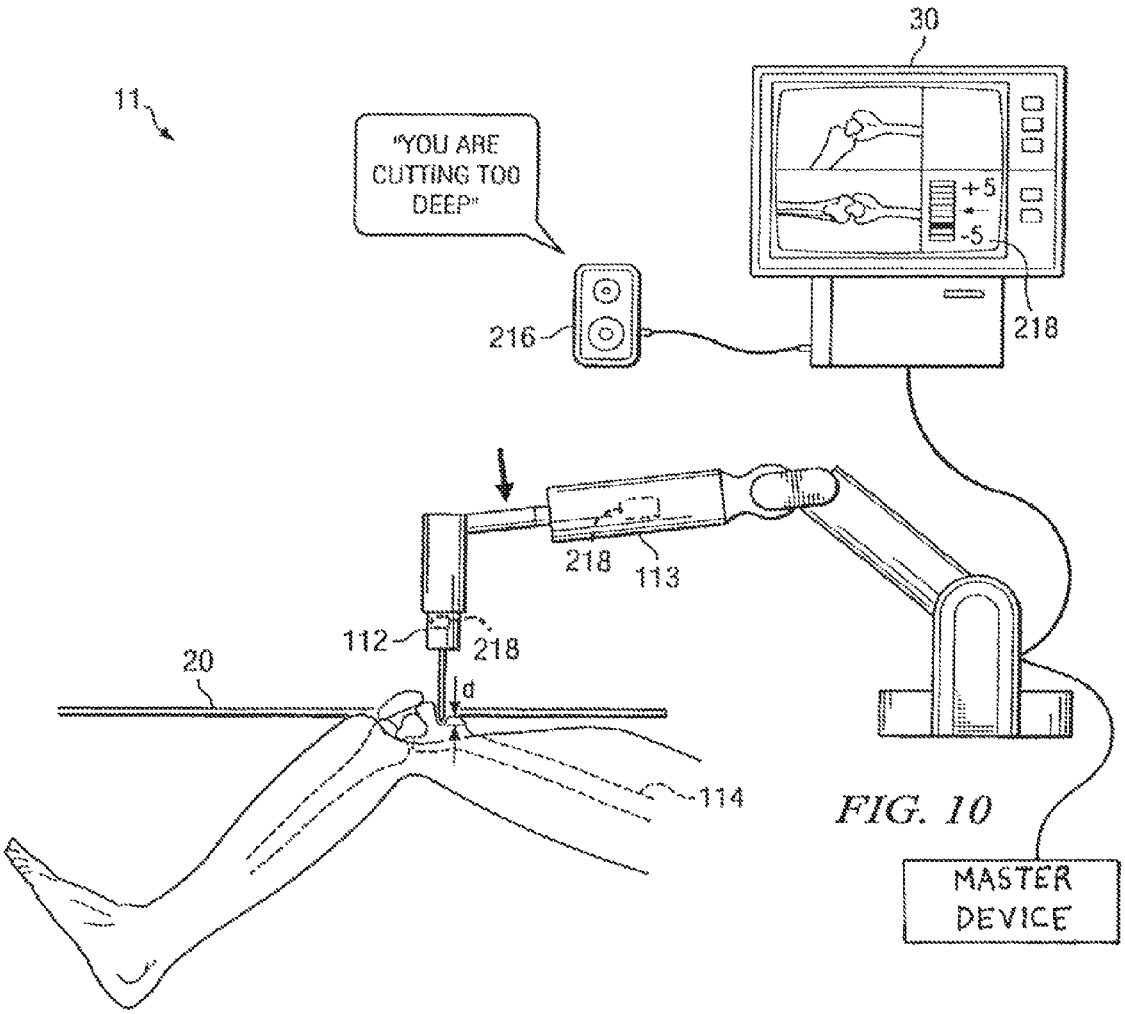
11
"YOU ARE CUTTING TOO DEEP"
30
+5
-5
216
218
218
113
112
218
20
d
114
MASTER DEVICE

FIG. 10

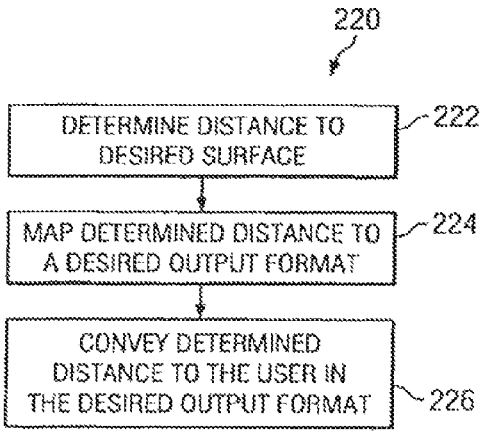
220
DETERMINE DISTANCE TO DESIRED SURFACE
222
MAP DETERMINED DISTANCE TO A DESIRED OUTPUT FORMAT
224
CONVEY DETERMINED DISTANCE TO THE USER IN THE DESIRED OUTPUT FORMAT
226

FIG. 11

TELEOPERATION SYSTEM WITH VISUAL INDICATOR AND METHOD OF USE DURING SURGICAL PROCEDURES

CROSS-REFERENCE TO RELATED APPLICATIONS

This application is continuation of U.S. patent application Ser. No. 12/144,507, filed Jun. 23, 2008, published Jan. 1, 2009, which is a divisional of U.S. patent application Ser. No. 11/357,197, filed Feb. 21, 2006, published Jun. 29, 2006, now U.S. Pat. No. 8,010,180, which is a continuation-in-part of U.S. patent application Ser. No. 10/384,072, filed Mar. 6, 2003, published Feb. 5, 2004, now U.S. Pat. No. 7,206,626; U.S. patent application Ser. No. 10/384,077, filed Mar. 6, 2003, published Feb. 19, 2004, now U.S. Pat. No. 7,206,627; U.S. patent application Ser. No. 10/384,078, filed Mar. 6, 2003, published Feb. 19, 2004, now U.S. Pat. No. 8,095,200; and U.S. patent application Ser. No. 10/384,194, filed Mar. 6, 2003, published Feb. 19, 2004, now U.S. Pat. No. 7,747,311, each of which claims priority from U.S. Provisional Patent Application No. 60/362,368, filed Mar. 6, 2002. U.S. patent application Ser. No. 11/357,197 is also a continuation-in-part of U.S. patent application Ser. No. 10/621,119, filed Jul. 16, 2003, published Jun. 3, 2004, now U.S. Pat. No. 7,831,292, which is a continuation-in-part of U.S. patent application Ser. No. 10/384,072, filed Mar. 6, 2003, published Feb. 5, 2004, now U.S. Pat. No. 7,206,626 and U.S. patent application Ser. No. 10/384,078, filed Mar. 6, 2003, published Feb. 19, 2004, now U.S. Pat. No. 8,095,200, each of which claims priority from U.S. Provisional Patent Application Ser. No. 60/362,368, filed Mar. 6, 2002. U.S. patent application Ser. No. 11/357,197 further claims priority from U.S. Provisional Patent Application Ser. No. 60/655,642, filed Feb. 22, 2005, and U.S. Provisional Patent Application Ser. No. 60/759,186, filed Jan. 17, 2006. Each of the above-referenced published applications and patents is incorporated by reference herein in its entirety.

TECHNICAL FIELD OF THE INVENTION

The present invention relates generally to computer-assisted surgery systems and surgical navigation systems, and more particularly to a teleoperation system with visual indicator and method of use during surgical procedures.

BACKGROUND OF THE INVENTION

The functions of a computer-assisted surgery (CAS) system may include pre-operative planning of a procedure, presenting pre-operative diagnostic information and images in useful formats, presenting status information about a procedure as it takes place, and enhancing performance. The CAS system may be used for procedures in traditional operating rooms, interventional radiology suites, mobile operating rooms or outpatient clinics. Many approaches to CAS have been attempted commercially. The procedure may be any medical procedure, whether surgical or non-surgical.

Navigation systems are used to display the positions of surgical tools with respect to pre- or intraoperative image datasets. These images include intraoperative images, such as two-dimensional fluoroscopic images, and preoperative three dimensional images generated using, for example, magnetic resonance imaging (MRI), computer tomography (CT) and positron emission tomography (PET). The most popular navigation systems make use of a tracking or localizing system. These systems locate markers attached or

fixed to an object, such as an instrument or a patient, and track the position of markers. These tracking systems are optical and magnetic, but also include acoustic systems. Optical systems have a stationary stereo camera pair that observes passive reflective markers or active infrared LEDs attached to the tracked tools. Magnetic systems have a stationary field generator that emits a magnetic field that is sensed by small coils integrated into the tracked tools. These systems are sensitive to nearby metal objects.

While navigation systems are relatively easy to integrate into the operating room, a fundamental limitation is that they have restricted means of communication with the surgeon. Most systems transmit information to the surgeon via a computer monitor. Conversely, the surgeon transmits information to the system via a keyboard and mouse, touch-screen, voice commands, control pendant, or foot pedals, and also by moving the tracked tool. The visual displays of navigation systems may at best display multiple slices through three-dimensional diagnostic image datasets, which are not easy to interpret for complex 3-D geometries. These displays also require the surgeon to focus his visual attention away from the surgical field.

When defining a plan using a tracked tool, it can be difficult to simultaneously position the tool appropriately in multiple degrees of freedom (DOFs). Similarly, when aligning a tracked instrument with a plan, it is difficult to control the position of the tool in multiple simultaneous DOFs, especially where high-accuracy is desirable. It is perhaps not a coincidence that navigation systems have had their largest acceptance in cranial neurosurgery, where most applications involve specifying a trajectory to a feature of interest without hitting critical features. Often, the tip of the tool is pressed against the anatomy and pivoted, effectively decoupling the position and orientation planning of the trajectory.

Autonomous robots have been applied commercially to joint replacement procedures. These systems make precise bone resections, improving implant fit and placement relative to techniques that rely on manual instruments. Registration is performed by having the robot touch fiducial markers screwed into the bones or a series of points on the bone surfaces. Cutting is performed autonomously with a high-speed burr, although the surgeon can monitor progress and interrupt it if necessary. Bones must be clamped in place during registration and cutting, and are monitored for motion, which then requires re-registration. Deficiencies reported by users of these systems include the large size of the robot, poor ergonomics, the need for rigidly clamping the bone for the 45-60 minutes required for registration and cutting, and the need for increasing the incision by 50-100 mm to provide adequate access for the robot. Furthermore, autonomous robots generally function best in highly structured environments, as evidenced by the rigid clamping of the bones of interest and making larger incisions to keep soft tissue away from the robot.

Except for specific steps of some surgical procedures, modern surgeries do not tend to provide well-structured environments for autonomous robots. A robot is generally not able to keep track of the surgical staff and instrumentation required to support a procedure. Although strict management of the operating environment might make this possible, the complexity of the human body will always provide a high degree of unstructuredness.

Robotic technology can also be used to improve upon standard practice without requiring autonomous operation. Notable commercial systems of this type include teleoperated robotic systems for laproscopic surgeries ranging from gall-bladder removal to closed-chest beating heart coronary

surgery. These systems provide a console for the surgeon that includes a high-fidelity display and a master input device. The slave robot is coupled to the master and physically interacts with the anatomy. The benefits of these systems are primarily in providing an ergonomic working environment for the surgeon while improving dexterity through motion scaling and tremor reduction. Although the master console would normally be in the same room as the patient, an interesting byproduct of these systems is that they enable telesurgery. However, the robots have minimal autonomy in these systems, which is not surprising given the complexity involved in manipulating and altering soft tissue.

SUMMARY OF THE INVENTION

A teleoperation system is provided for use during a surgical procedure. The teleoperation system comprises a surgical tool and a master input device for being moved by a user. A slave device is coupled to the surgical tool and responsive to movement of the master input device. The slave device is configured to be operated in a first mode to place the surgical tool in a desired pose with respect to a target region and a second mode to manipulate the surgical tool during the surgical procedure. A visual indicator is coupled to the slave device and configured to emit light in the second mode to provide visual information to the user in the second mode.

A teleoperation system is provided for use during a surgical procedure. The teleoperation system comprises a surgical tool and a master input device for being moved by a user. A slave device is coupled to the surgical tool and responsive to movement of the master input device. The slave device is configured to be operated in a first mode to place the surgical tool in a desired pose with respect to a target region and a second mode to manipulate the surgical tool during the surgical procedure. A visual indicator is coupled to the surgical tool and configured to emit light in the second mode to provide visual information to the user in the second mode.

A method for using a teleoperation system during a surgical procedure is provided. The teleoperation system comprises a surgical tool, a master input device, a slave device, and a visual indicator. The slave device is operable in a first mode to place the surgical tool in a desired pose with respect to a target region in response to a manual force applied to the slave device. The method comprises controlling the slave device in a second mode, different than the first mode, to manipulate the surgical tool during the surgical procedure in response to movement of the master input device. The method further comprises visually indicating information to the user in the second mode by emitting light with the visual indicator in the second mode.

BRIEF DESCRIPTION OF THE DRAWINGS

For a more complete understanding of the present invention, the objects and advantages thereof, reference is now made to the following descriptions taken in connection with the accompanying drawings in which:

FIG. **1** is a diagrammatic illustration of an exemplary operating room in which a haptic device is used with a computer-assisted surgery system;

FIG. **2** illustrates an exemplary haptic device being used in conjunction with a computer-assisted surgery system;

FIGS. **3**A and **3**B illustrate different types of haptic objects;

FIG. **3**C is a flowchart of an exemplary method for intra-operative haptic planning of a surgical procedure;

FIG. **4**A illustrates the use of a dynamic haptic object for placement of a haptic device;

FIG. **4**B is a flowchart of a method for interactive haptic positioning of a medical device coupled to a haptic device;

FIG. **5** illustrates the use of an exemplary haptic device in conjunction with a computer-assisted surgery system;

FIG. **6**A illustrates an exemplary haptic device being used for haptic sculpting of physical objects;

FIG. **6**B illustrates an exemplary haptic object for haptic sculpting of physical objects;

FIG. **6**C is a flowchart of a method for dynamically modifying a haptic object;

FIGS. **7**A and **7**B illustrate the use of an exemplary haptic device and a surgical tool to define a haptic object;

FIG. **8** illustrates the use of an exemplary haptic device as an input device;

FIG. **9** is a flowchart of a representative method for using a haptic device as an input device;

FIG. **10** illustrates a system for conveying depth information during a medical procedure; and

FIG. **11** is a flowchart of a method for conveying depth information during a medical procedure.

DETAILED DESCRIPTION OF THE DRAWINGS

In the following description, like numerals refer to like elements. References to "surgeon" include any user of a computer-assisted surgical system, a surgeon being typically a primary user. References to "surgical procedure" include any medical procedure, whether interventional or non-interventional, an interventional procedure being typically the primary procedure.

A haptic device is a mechanical or electro-mechanical device that interacts and communicates with a user, such as a surgeon, using sensory information such as touch, force, velocity, position, and/or torque. Some robots may be used as haptic devices, though haptic devices may include devices that are not necessarily considered to be robots in a conventional sense. Haptic devices typically have little autonomy.

In general, a component of interest may be optionally coupled to the haptic devices. A component of interest may comprise a medical device, for example a surgical tool, a microscope, a laser range finder, a camera, a surgical light, an endoscope, an ultrasound probe, a radiotherapy device, interventional medical tools, rehabilitative systems for physical therapy, and/or the like. The terms "medical device", "surgical device" and "surgical tool" are used interchangeably herein.

For example, when used during surgery, such devices cooperatively hold a surgical instrument in conjunction with the surgeon. The surgeon moves the surgical instrument with the assistance of, or input from, the haptic device. Alternatively, in a teleoperation system, the haptic device may exclusively hold the surgical instrument. In such an implementation, the surgeon moves a "master" haptic device that is coupled to a "slave" device in order to interactively manipulate the surgical tool. In a teleoperation system, the master haptic device may be physically separated from the surgical site to provide a more ergonomic or immersive working position for the surgeon and/or allow the surgeon to perform the surgery remotely. In an impedance mode, a haptic device measures or senses the pose (position, orientation, velocity, and/or acceleration) of the surgical instrument and applies forces and/or torques ("wrench") to the

instrument. In an "admittance" mode, a haptic device measures the wrench at some location on the device (or surgical instrument) and acts to modify the position of the instrument. There may be a static, quasi-static, or dynamic mapping between the sensed pose and output wrench. Common mappings may include wrenches that result from the tool interacting with "virtual" objects defined by or with input from a user, which may include mathematical or simulated mechanical constraints.

A "haptic object" is used herein to describe such a mapping. In some cases, a haptic object may only produce non-zero outputs for certain joint angles of the haptic device, or only for certain endpoint positions and/or orientations of the haptic device. A haptic object may be a smoothly time varying mapping and/or may only exist for certain times. A haptic object may have an associated spatial or geometric representation that corresponds to locations where the mapping is discontinuous or has other properties that can be felt by the user when interacting with the haptic object. For example, if a haptic object only produces non-zero outputs when the endpoint of the haptic device lies within a spherical region in space, then it may be useful to present a corresponding spherical representation to the user. However, a haptic object may not necessarily have such a clearly defined boundary or similar internal structures. A haptic object may be active over the entire range of endpoint positions, endpoint orientations, and/or joint positions of the haptic device or only a portion of these ranges. There may be multiple haptic objects active at any given time, possibly in overlapping portions of space.

A "haptic cue" is used to describe an aspect of the mapping of a haptic object. Having a cue may convey information or produce a desired effect when the user interacts with the haptic object. Haptic cues and haptic objects do not necessarily correspond to user interface or software programming components in a particular embodiment and may be simply one of many ways to design, implement, present to the user the mappings between the inputs and outputs of the haptic device.

The reduction or elimination of autonomy increases the comfort level of users, such as surgeons. Any time a robot moves autonomously, the surgeon is no longer in control and must simply observe the robot's progress. Robot motions have to be slow to provide adequate time for the surgeon to respond should something unusual happen. If, however, a robot acts, at least mostly, in a passive manner, even if capable of active motions, then the surgeon does not cede control to the robot.

Using a device capable of active motions in such a way that it only acts like a passive device from the user's perspective has advantages. Active actuators can be used to counteract the effect of gravity, allowing a greater variety of mechanism designs. The device can be used in an autonomous mode for performing automated testing and service procedures.

FIG. **1** is a diagrammatic illustration of an exemplary operating room in which a haptic device **113** is used with a computer-assisted surgery system **11**. Computer-assisted surgery system **11** comprises a display device **30**, an input device **34**, and a processor based system **36**, for example a computer. Input device **34** may be any input device now known or later developed, for example, a keyboard, a mouse, a trackball, and/or the like. Display device **30** may be any display device now known or later developed for displaying two-dimensional and/or three-dimensional images, for example a monitor, a wearable display, a projection display, a head-mounted display, stereoscopic views, a display device capable of displaying image(s) projected from an image projecting device, for example a projector, and/or the like. If desired, display device **30** may be a display device capable of displaying a holographic image. If desired, display device **30** may be a touch screen and be used as an input device.

Haptic device **113** is, in the illustrated example, a robotic device. Haptic device **113** may be controlled by a processor based system, for example a computer **10**. Computer **20** may also include power amplification and input/output hardware. Haptic device **113** may communicate with computer-assisted surgery system **11** by any communication mechanism now known or later developed, whether wired or wireless.

Also shown in FIG. **1** is a storage medium **12** coupled to processor based system **36**. Storage medium **12** may accept a digital medium which stores software and/or other data. A surgical tool or instrument **112** is shown coupled to haptic device **113**. Surgical tool **112** is preferably mechanically coupled to haptic device **113**, such as by attaching or fastening it. However, if desired, surgical tool **112** may be coupled, either directly or indirectly, to haptic device **113** by any other method, for example magnetically. If desired, vacuum may be used to couple surgical tool **112** to haptic device **113**. Surgical tool **112** may be haptically controlled by a surgeon remotely or haptically controlled by a surgeon **116** present in proximity to surgical tool **112**.

Haptic object **110** is a virtual object used to guide and/or constrain the movement and operations of surgical tool **112** to a target area inside a patient's anatomy **114**, for example the patient's leg. In this example, haptic object **110** is used to aid the surgeon to target and approach the intended anatomical site of the patient. Haptic feedback forces are used to slow and/or stop the surgical tool's movement if it is detected that a portion of surgical tool **112** will intrude or cross over predefined boundaries of the haptic object. Furthermore, haptic feedback forces can also be used to attract (or repulse) surgical tool **112** toward (or away from) haptic object **110** and to (or away from) the target. If desired, surgeon **116** may be presented with a representation of the anatomy being operated on and/or a virtual representation of surgical tool **112** and/or haptic object **110** on display **30**.

When surgical tool **112** is haptically controlled by a surgeon remotely, for example when conducting a teleoperation, the surgeon controls the movement of the surgical tool using the master haptic device and/or a real or simulated display of the surgical tool, patient anatomy, and/or additional haptic or visual objects designed to aid the surgical procedure. Haptic feedback forces may be transmitted by slave haptic device **113** to the surgeon at the remote location via the master haptic device to guide the surgeon. Alternatively, the haptic feedback forces may be generated at the master device and transmitted to the surgeon directly. In some cases either the slave or master device may be a positioning device with little or no haptic capabilities.

The CAS system preferably includes a localization or tracking system that determines or tracks the position and/or orientation of various trackable objects, such as surgical instruments, tools, haptic devices, patients, and/or the like. The tracking system continuously determines, or tracks, the position of one or more trackable markers disposed on, incorporated into, or inherently a part of the trackable objects, with respect to a three-dimensional coordinate frame of reference. Markers can take several forms, including those that can be located using optical (or visual), magnetic or acoustical methods. Furthermore, at least in the case of optical or visual systems, location of an object's position may be based on intrinsic features, landmarks,

shape, color, or other visual appearances, that, in effect, function as recognizable markers.

Any type of tracking system may be used, including optical, magnetic, and/or acoustic systems, that may or may not rely on markers. Present day tracking systems are typically optical, functioning primarily in the infrared range. They usually include a stationary stereo camera pair that is focused around the area of interest and sensitive to infrared radiation. Markers emit infrared radiation, either actively or passively. An example of an active marker is a light emitting diodes (LEDs). An example of a passive marker is a reflective marker, such as ball-shaped marker with a surface that reflects incident infrared radiation. Passive systems require an infrared radiation source to illuminate the area of focus. A magnetic system may have a stationary field generator that emits a magnetic field that is sensed by small coils integrated into the tracked tools.

With information from the tracking system on the location of the trackable markers, CAS system **11** is programmed to be able to determine the three-dimensional coordinates of an end point or tip of a tool and, optionally, its primary axis using predefined or known (e.g. from calibration) geometrical relationships between trackable markers on the tool and the end point and/or axis of the tool. A patient, or portions of the patient's anatomy, can also be tracked by attachment of arrays of trackable markers. In the illustrated example, the localizer is an optical tracking system that comprises one or more cameras **14** that preferably track a probe **16**. As shown in FIG. **1**, cameras **14** may be coupled to processor based system **36**. If desired, cameras **14** may be coupled to computer **10**. Probe **16** may be a conventional probe now known or later developed. If desired, the probe may be rigidly attached to haptic device **113** or integrated into the design of haptic device **113**.

If desired, in an implementation, processor based system **36** may comprise a portion of image guided surgery software to provide minimal user functionality e.g., retrieval of previously saved surgical information, preoperative surgical planning, determining the position of the tip and axis of instruments, registering a patient and preoperative and/or intraoperative diagnostic image datasets to the coordinate system of the tracking system, etc. Image guided surgery using this method may not be possible with the computer alone. As such, full user functionality may be enabled by providing the proper digital medium to storage medium **12** coupled to computer **36**. The digital medium may comprise an application specific software module. The digital medium may also comprise descriptive information concerning the surgical tools and other accessories. The application specific software module may be used to assist a surgeon with planning and/or navigation during specific types of procedures. For example, the software module may display predefined pages or images corresponding to specific steps or stages of a surgical procedure. At a particular stage or part of a module, a surgeon may be automatically prompted to perform certain tasks or to define or enter specific data that will permit, for example, the module to determine and display appropriate placement and alignment of instrumentation or implants or provide feedback to the surgeon. Other pages may be set up to display diagnostic images for navigation and to provide certain data that is calculated by the system for feedback to the surgeon. Instead of or in addition to using visual means, the CAS system could also communicate information in ways, including using audibly (e.g. using voice synthesis) and tactilely, such as by using a haptic interface of device. For example, in addition to indicating visually a trajectory for a drill or saw on the screen, a CAS system may feedback to a surgeon information whether he is nearing some object or is on course with an audible sound. To further reduce the burden on the surgeon, the module may automatically detect the stage of the procedure by recognizing the instrument picked up by a surgeon and move immediately to the part of the program in which that tool is used.

The software module may be such that it can only be used a predefined number of times. If desired, the software module functions only when used in conjunction with the portion of the image guided surgery software that resides on computer **36**. The software which resides on computer **36** in conjunction with the software on the digital medium processes electronic medical diagnostic images, registers the acquired images to the patient's anatomy, and/or registers the acquired images to any other acquired imaging modalities, e.g., fluoroscopy to CT, MRI, etc. if desired, the image datasets may be time variant, i.e. image datasets taken at different times may be used. Media storing the software module can be sold bundled with disposable instruments specifically intended for the procedure. Thus, the software module need not be distributed with the CAS system. Furthermore, the software module can be designed to work with specific tools and implants and distributed with those tools and implants. Moreover, CAS system can be used in some procedures without the diagnostic image datasets, with only the patient being registered. Thus, the CAS system need not support the use of diagnostic images in some applications—i.e. an imageless application.

An example of the illustrated robotic arm is a robotic arm manufactured by Barrett Technology, and referred to as the "Whole-Arm Manipulator" or "WAM". This robotic arm has a cable transmission, which provides high bandwidth, back-drivability, and force fidelity. However, other robotic devices capable of impedance or admittance modes of haptic interaction could be used. For example, direct-drive systems or systems with other types of low-friction transmissions or systems with a combination of transmission types may also be well-suited to serve as a haptic device for surgical applications. Furthermore, the haptic device need not necessarily take the form of a robotic arm. The WAM robotic arm has a four degrees of freedom of movement. However, it is augmented by a 1-DOF direct-drive wrist for trajectory-based medical applications. If desired, degrees of freedom may be added or removed without affecting the scope of the illustrated invention.

Though it has some advantages, a cable transmission has some disadvantages. It requires careful installation and maintenance to prevent the possibility of failure during a procedure. Furthermore, a cable transmission is not as stiff as geared transmissions. Similar deficiencies may also be found in haptic devices using other types of transmissions.

These deficiencies may be addressed by augmenting existing position sensors that are mounted on drive motors with additional redundant sensors. These sensors may be of various types, including without limitation rotary encoders or resolvers, tilt sensors, heading (compass) sensors, sensors that detect the direction of gravity, an optical, magnetic or acoustical tracking system (such as optical camera systems of the type commonly used to track surgical instruments), or laser-based position sensing. The output of these sensors can be compared with the original sensors to detect discrepancies that may indicate problems in the transmissions or sensors. In addition, the added sensors can be used to detect both low bandwidth deflections in the cable transmissions, which the system can then easily compensate for using well-known control techniques. The sensor may also detect

the high bandwidth deflections in the cable transmissions, which can provide an additional input to the servo loop and permit improved stability of the servo system, using well-known control techniques for systems that include sensors on both the drive and load sides of a transmission. The sensor can also improve the accuracy of the determination of the pose of the arm by reducing or eliminating the effect of deflections of the arm links and/or transmission. Such sensors could also be used to overcome similar deficiencies in robotic devices using other types of transmission systems.

When performing surgery, a haptic device capable of holding a tool, e.g. a drill guide or other similar constraint or attachment mechanism for surgical tools is positioned relative to the patient such that it can attain the poses appropriate for a variety of approaches for a particular procedure. It is also registered to the physical anatomy such that it can correlate information in diagnostic or planning image datasets, which can be two or three dimensional, to locations in physical space using well-known registration techniques. The image datasets may be one or more images generated using for example, magnetic resonance imaging (MRI), computer tomography (CT), positron emission tomography (PET), magnetic resonance angiography (MRA), single photon emission computed tomography (SPECT), magnetic resonance venography (MRV), contrast enhanced MR venography (CEMRV), CT angiography, CT myelography, MR angiography, MR myelography, fluoroscopy, optical imaging, isotope imaging, ultrasound microscopy, laproscopic ultrasound, and MR spectrometry. Such images may include, for example, x-ray images, digital x-ray images, computer tomography images, MRI images, MRA images, MR spectrometric images, PET images, MRV images, SPECT images, CEMRV images, CT angiographic images, CT myelographic images, MR myelographic images, flair images, two-dimensional fluoroscopic images, three-dimensional fluoroscopic images, two-dimensional ultrasonic images, three-dimensional ultrasonic images, ultrasound microscopy images, laproscopic ultrasound images, optical images, isotopic images, laser depth maps, line arts, sketches, "cartoon" representations, holographic images, and/or the like.

Features to be avoided, such as blood vessels, tendons, nerves, and critical areas of the brain can be automatically, semi-automatically, or manually defined on the image datasets. Features targeted by the procedure, such as tumors, osteophytes, anatomical targets for deep-brain stimulation, biopsy sites, anatomical sites for implant placement, or other regions of the anatomy can also be automatically, semi-automatically, or manually defined on the image datasets.

The image dataset(s), coupled with definitions of features to be avoided, can be used to create haptic "cues" that indicate to the surgeon that a violation of sensitive anatomy is taking place. A general function of these types of cues is to apply forces and/or torques that tend to repulse the haptic device from poses where an instrument attached to the device would, for example, impact the defined critical features. Similarly, the image dataset(s), coupled with the definitions of features to be targeted can also used to create haptic cues that indicate to the surgeon that the desired target region would be reached by the surgical instrument appropriately attached to the haptic arm. A general function of these types of cues is to attract the haptic device to such poses or lock the haptic device into these poses once they are attained.

While the haptic device can be deployed as a fully integrated component of a computer-aided surgery system, there are advantages to having the haptic device act as an optional peripheral to such a system. The system is then convenient to use for procedures that do not require the use of the haptic device. There are also development and architectural advantages to this approach. The haptic device will likely require a real-time operating system or special motion control hardware to generate high-frequency updates for the haptic control system. The computer-aided surgery system will have different requirements, such as fast graphics processing hardware and compatibility requirements with a range of user input and output devices, so that there are advantages of having two computer systems to meet the differing uses. Separating the computer surgery and haptic arm components also has safety advantages. The haptic device therefore preferably contains only computing software and hardware that is necessary for ensuring high-performance, stable, and safe operation. The computer aided surgery system can contain software and hardware for connecting to a hospital network, displaying various graphical views, supporting various user input/output devices, managing libraries of implant and instrument databases, and/or any other functionality useful in such a system. This architecture also allows developers with minimal knowledge of haptic systems to build applications that use the haptic device. The physical interface between these two systems can be wired or wireless, such as a serial, USB, or other cable communications interface, or wireless ethernet, wireless serial, infra-red or other wireless communications system. The software interface between these systems would include a set of commands that allows the computer aided surgery system to control operation of the haptic device. For example, the computer-aided surgery system may send a command to the haptic device requesting it to enter into a joystick-like input mode with certain stiffness parameters. The haptic arm system checks if the parameters are safe and otherwise acceptable, and then enters into such a mode or responds with an appropriate error message. The computer-aided surgery system and haptic device may also be integrated into a single system unit, or may be implemented using a single or a multi-processor computing device. The CAS system, the haptic device and/or computer **10** may also be integrated into another piece of equipment, such as an imaging equipment (e.g., fluoroscopy, CT, MR, ultrasound, and/or the like), an equipment cart in the room where the medical procedure is performed, and/or the like.

Referring to FIG. **2**, representative "haptic object" **20** is a two-dimensional virtual plane. However, it is only an example of haptic objects generally, which may be zero (e.g. a point), one (e.g. a virtual line or path), two (e.g. a virtual plane or flat surface), or three dimensional (e.g. a virtual curved surface, a cube or other solid object), and may have simple or complex geometric shapes. Haptic object **20** is preferably defined with respect to the space of a physical object, such as patient anatomy **114**. Haptic object **20** is defined to guide and/or constrain the movement of haptic device **113**. The distance between haptic device **113** and haptic object **20** is shown in FIG. **2** by X and the distance between patient's anatomy **114** and haptic object **20** is shown by X**1**. Haptic object **20** may be used in connection with generating force feedback on haptic device **113**. The generation of force feedback may also depend on various factors, for example, the velocity at which haptic device **113** is approaching patient's anatomy **114**, the position of haptic device **113**, haptic object **20**, and/or the like. An algorithm which computes the current position of haptic device **113** relative to haptic object **20** may be used to provide information to the surgeon about the location of haptic device **113** relative to haptic object **20**. When haptic device **113** comes

within a predefined distance of haptic object **20**, a stiffness parameter may be changed to make it more difficult to move haptic device **113**. If desired, force may be applied in a direction away from anatomy **114** to resist the movement of haptic device **113** toward anatomy **114** or to move haptic device **113** away from anatomy **114**.

It may not be appropriate to implement rigid haptic objects, such as virtual surfaces and walls, in certain cases. A surgeon will lose the ability to feel the anatomy in any direction that is rigidly constrained by the haptic device. In many applications, precise localization of anatomical features cannot be achieved by simply combining diagnostic datasets with a tool tracking system or precision robotic devices. Changes in the anatomy after the diagnostic datasets are taken, unsensed motion in the kinematic chain connecting the anatomical features of interest and the tracking system's camera or haptic device, registration errors, and inaccuracies in the localization devices will contribute to positioning errors. Although CAS systems may be used to position the surgical tool very close to the target region, more accurate positioning is often difficult or prohibitively costly. In some medical procedures, such as pedicle screw placement in the upper thoracic and cervical portions of the spine, deep brain neurosurgical procedures, etc., a slight inaccuracy may adversely affect the medical procedure being performed. Therefore, it is desirable in these types of procedures that a surgeon retain an ability to feel the anatomy.

Haptic devices can be used for registering patients to CAS systems and diagnostic data sets of the patient's anatomy, for example, by attaching a probe and touching it to a few selected anatomical landmarks, implanted fiducials, or multiple points on a surface of interest. They can be used for haptic exploration of diagnostic datasets to augment the visual display of this information. This exploration may occur intra-operatively while registered to the actual patient anatomy or pre-operatively in a purely virtual way. This haptic exploration is especially useful for exploring complex three-dimensional structures, where the surgeon's highly developed sense of touch can be used to explore complexities or subtleties of the dataset that may be difficult or impossible to display adequately on a two-dimensional or even three-dimensional visual display.

While performing traditional freehand surgery, surgeons rely on local anatomical features to ensure proper positioning of the surgical tool. If the ability of the surgeon to feel the patient anatomy is preserved, the surgeon can explore the local anatomy and correct these localization errors based on his expert knowledge of structures of interest. In this way, the final positioning is determined by nearby anatomical features rather than a tracking system sitting across the operating room or a robot whose base may not be rigidly connected to the patient.

A portion of surgical tool **112** coupled with a haptic device, for example the tip of surgical tool **112**, may be used to sense properties of the local anatomy. The properties of the local anatomy may be used to position surgical tool **112** or to verify the proper positioning of surgical tool **112**. The properties that may be sensed or monitored by the tool include electrical properties of the anatomy, force, pressure, stiffness, conductivity, etc. The information from the tip may be provided back to CAS system **11**. The information may then, if desired, be correlated with information from diagnostic image datasets of the patient. If desired, information from the tool may be used to augment or replace the information from the image datasets. In either case the information may be used for better placement of surgical tool **112**.

Location or position information of the tool may be sensed and provided back to CAS system **11** without the use of a separate sensor. The surgeon may manually move surgical tool **112** to the desired position. Position information of the tip of surgical tool **112** in the desired position may be determined directly by CAS system **11** and/or computer **10** without the use of a separate sensor. Other properties of the anatomy may be sensed by placing sensors at the tip of surgical tool **112**. The output from the sensors may be provided back to CAS system **11** for processing.

The collected information may be used for a variety of purposes, such as alerting the user to registration errors, fully or partially correcting registration errors, displaying graphical representations of the information on display device **30**, defining haptic objects to assist the user, displaying graphical representations of the information on display device **30** superimposed over one or more images of the anatomy, and/or the like. If desired, the collected information may be logged for use in machine learning techniques.

The combination of a haptic device and a CAS system is also useful for combining haptic exploration of diagnostic datasets and use of the haptic device as a primary input device for planning. In this way, haptic exploration naturally leads the user to a suitable plan for performing a procedure. Additionally, in some circumstances it is possible to have the haptic device and the tool coupled with it in the correct position for performing a procedure as a result of this exploration/planning process, eliminating the need to move the haptic device into position as a separate step.

Referring to FIG. **3**A, it may be desirable in certain procedures to confine the surgical instrument to a small working volume, in which case it may stay within a working area inside a haptic object during the entire procedure. It may be necessary in certain cases to segment or define manually certain important features, but for most applications automated segmentation of the diagnostic datasets will be sufficient for providing appropriate haptic feedback.

In the illustrated embodiment, one or more attractive haptic objects are associated with a target region for performing the surgical procedure and one or more repulsive haptic objects are associated with anatomical features to be avoided during the surgical procedure. For example, as shown in FIG. **3**A, haptic object **22** defines a working area or volume for constraining movement of surgical tool **112**. On the other hand, as shown in FIG. **3**B, haptic object **24** defines a working area or volume for constraining movement of surgical tool **112** so that it is prevented from coming close to critical regions, such as nerves **25**, organs **27**, etc. For example, once the haptic objects are defined, the user performs surgical planning by pushing haptic device **113** around until a pose is found where the cues from the attractive haptic objects are active indicating that surgical tool **112**, when attached to haptic device **113**, would reach the target region, and where the cues from the repulsive haptic objects are inactive, indicating that surgical tool **112** would not penetrate any of the defined sensitive anatomical regions. In most cases, these requirements will not fully constrain the pose of the arm and the user can move the arm within this range of acceptable approaches based on any secondary criteria a user finds appropriate. In some cases, the arm may achieve an equilibrium state where multiple attractive or repulsive haptic cues act in opposite directions. The user might mistake this configuration to be an acceptable pose, even though the target region might not be

reached or the critical anatomy regions might be violated. The user may be alerted to this situation in a number of ways, including audible or visual indicators, or by a haptic cue such as a vibration of haptic device **113**. The user could then correct this situation by pushing the haptic device away from this pose. Once in a pose satisfactory to the user, haptic device **113** can be locked into position, using hardware brakes, control serving techniques, or any other appropriate method to provide a stable physical reference for the surgical procedure.

If fine adjustments are desired, the haptic device can be operated using a mode where motion scaling, constraints, or other methods are used to make such corrections that might otherwise be beyond the dexterity of the surgeon. For example, a control servo can be enabled to lock the device to a certain finite stiffness at the approximate desired pose. The surgeon can then make fine adjustments to this pose using a variety of methods. For example, the surgeon may use a touch screen, a keyboard, a mouse, a trackball or voice inputs. If desired, the surgeon may push the end of the haptic device in the desired direction. In response to these inputs, the system would adjust the desired pose appropriately, possibly in small increments that would be difficult to achieve by direct positioning of the haptic device. It may be desirable to lock only a portion of the pose so that the surgeon can focus on a more limited number of adjustments at one time. This fine adjustment may occur after the coarse haptic positioning is complete, simultaneous with the coarse haptic positioning, or interleaved with the coarse haptic positioning.

For example, selecting a trajectory for a cranial neurosurgical procedure such as a biopsy, tumor resection, or deep-brain stimulation is a complicated 3-D planning problem. The surgeon must find a path to a target area while avoiding blood vessels and sensitive areas of the brain. If these regions can be turned into repulsive haptic objects, planning such a procedure may be as simple as applying a haptic constraint that keeps the trajectory of a tool guide passing through the target of interest, and allowing the user to pivot the device about this point until it settles into a suitable pose where none of the repulsive haptic objects are violated.

FIG. **3**C is a flowchart of an exemplary method **140** for intraoperative haptic planning of a surgical procedure. Haptic device **113** is placed in the operating room such that surgical tool **112** may be positioned over a large portion of a clinically reasonable range of surgical approaches for a given surgical procedure. Surgical planning using method **140** is performed in the presence of the patient and preferably without surgical tool **112** being coupled to haptic device **113**. Surgical tool **112** may be a non-contact medical device, such as a diagnostic or therapeutic radiation source. If desired, surgical planning using method **140** may be performed with surgical tool **112** coupled to haptic device **113** but being in a retracted state. When surgical tool **112** comprises a non-contact medical device, it is preferably in a disabled state. A representation of the anatomy of the patient to be operated on may be displayed on display device **30** along with a "virtual tool". The virtual tool may be a high-fidelity representation or a schematic representation of surgical tool **112**, such as an axis, a point, or other feature of surgical tool **112**. The virtual tool indicates relative to the anatomy of the patient, the position and/or angle of surgical tool **112** or some portion thereof if the surgical tool had been coupled to haptic device **113** in its normal or enabled state.

In step **142**, haptic device **113** is registered to the anatomy of the patient. If desired, the representation of the anatomy of the patient displayed on display device **30** may also be registered with the anatomy of the patient so that information in diagnostic or planning datasets may be correlated to locations in the physical space. Any method for registering, now known or later developed, may be used. In step **144**, the target region is defined. The target region may be, for example, a tumor, an osteophyte, an anatomical target for deep-brain stimulation, a bone channel, and/or the like. The target region may be defined in any manner now known or later developed. For example, the user, such as the surgeon, may manually identify the target region on display device **30**. If desired, the surgeon may define the target region by touching one or more points on the target region or circling the target region on display device **30** with a tool. Alternatively, the surgeon may define the target region by pointing a tool mounting axis of haptic device **113** to the target region or by using haptic device **113** as an input device. Preferably, the identified target region is automatically highlighted on display device **30**. The tool mounting axis of haptic device **113** may be of any shape, for example curved, straight, and/or the like. Regardless of the manner in which the target region is defined, it is desirable that once defined, the target region be clearly displayed on display device **30** for confirmation. One or more attractive haptic objects, such as haptic object **22** of FIG. **3**A, may be associated with the target region.

In step **146**, anatomical obstacles to be avoided are defined. The anatomical obstacles comprise features to be avoided during surgery, such as major blood vessels, tendons, nerves, critical areas of the brain, organs, healthy bones or other tissues, and/or the like. The anatomical obstacles may be defined in any manner now known or later developed. For example, the surgeon may manually identify the anatomical obstacles on display device **30**. If desired, the surgeon may define the anatomical obstacles by touching one or more points on the anatomical obstacles or circling the anatomical obstacles on display device **30** with a tool. Alternatively, the surgeon may define the anatomical obstacles by pointing the tool mounting axis of haptic device **113** to the anatomical obstacles or by using haptic device **113** as an input device. Preferably, the identified anatomical obstacles are highlighted on display device **30**. Regardless of the manner in which the anatomical obstacles are defined, it is desirable that, once defined, the anatomical obstacles are clearly displayed on display device **30** for confirmation. One or more repulsive haptic objects, such as haptic object **24** of FIG. **3**B, may be associated with the defined anatomical obstacles. Preferably, each anatomical obstacle has one repulsive haptic object associated with it, although if desired more than one repulsive haptic object may be associated with an anatomical obstacle.

In step **148**, haptic device **113** is positioned, preferably by the surgeon, such that if surgical tool **112** were coupled to haptic device **113** or if surgical tool **112** were in an operating state, then the appropriate portion of the surgical tool would have the desired relationship with the target region. For example, when coupled to haptic device **113**, surgical tool **112** would penetrate the target region. Surgical tool **112** is in its operating state when it is coupled to haptic device **113** and is not retracted and/or is not disabled. Step **148** is preferably performed without regard to whether or not the tool may intersect the anatomical obstacles in this position. A virtual tool displayed on display device **30** is such that it's position and orientation corresponds to the position and orientation of surgical tool **112** if surgical tool **112** had been mounted on haptic device **113** or if surgical tool **112** were in its normal operating state. Thus, the surgeon may position

haptic device **113** in the desired pose while viewing the display on device **30**, such that the virtual tool has the appropriate relation with the target region.

In step **152**, a determination is made as to whether the virtual tool is intersecting any anatomical obstacles. If the virtual tool is not intersecting any anatomical obstacles, then the process starting at step **162** is executed. Otherwise, the process starting at step **154** is executed. In step **154**, haptic cues are provided by haptic device **113** to the user. The haptic cues may be provided to the user based on one or more haptic objects, for example the attractive haptic object(s) associated with the target region and/or the repulsive haptic object(s) associated with the anatomical obstacles. The repulsive haptic object(s) generate forces and/or torques that guide haptic device **113** away from poses where the virtual tool would intersect the anatomical obstacles. Preferably, the repulsive haptic cues are active when the virtual tool penetrates the repulsive haptic objects or is in proximity to the repulsive haptic objects. The attractive haptic object(s) cause the haptic device to generate forces and/or torques that guide haptic device **113** toward poses where the virtual tool has the desired relationship with the target region.

It is possible that the position of haptic device **113** may be such that cues from multiple haptic objects cancel each other out even though the virtual tool may be violating the anatomical obstacles. As such, in step **156**, a determination is made as to whether haptic cues from multiple obstacles are canceling each other out. If haptic cues from multiple obstacles are not canceling each other out, then the process starting at step **158** may be executed. If haptic cues from multiple obstacles are canceling each other out, then in step **160**, a special haptic cue, for example a vibration, may be provided to alert the user of this situation and the process starting at step **158** may be executed.

In step **158**, haptic device **113** is moved, preferably by the surgeon. Haptic device **113** is preferably moved based at least in part on the haptic cues provided by haptic device **113** to the surgeon. The position of surgical tool **112** had it been coupled to haptic device **113** is tracked by the virtual tool and displayed on display device **30**. Preferably, the user moves haptic device **113** until an equilibrium pose is found. In the equilibrium position, the cues created by the attractive haptic objects are active and those created by the repulsive haptic objects are inactive. The process starting at step **152** may then be executed to determine whether the virtual tool is intersecting any anatomical obstacles.

In step **162**, a determination is made as to whether the user is satisfied with the trajectory to the target region. The user may make this determination by viewing the virtual tool relative to the target region as illustrated on display device **30**. If the user is not satisfied with the position and/or the orientation of the virtual tool, then the process starting at step **158** may be executed. If the user is satisfied with the position and the orientation of the virtual tool relative to the target region and the obstacles, then the process starting at step **164** may be executed. The user may indicate its satisfaction in one or more of a number of ways. For example, the user may issue a voice command to indicate that it is satisfied with the position and orientation of the virtual tool. If desired, the user may activate a foot pedal or a button associated with the computer-assisted surgery system or haptic device **113** to indicate its satisfaction. If desired, the user may indicate its satisfaction via a touch screen, a keyboard, a mouse, and/or the like, associated with the computer-assisted surgery system or haptic device **113**. In step **164**, haptic device **113** may be locked in the current pose.

Once the pose of haptic device **113** is locked, the surgical procedure may be performed, for example by coupling surgical tool **112** to haptic device **113** or by placing surgical tool **112** in its fully functional or operational configuration. Because the pose of surgical tool **112** relative to the anatomy has already been determined with the aid of the virtual tool, surgical tool **112** will achieve the desired position when it is coupled to haptic device **113** or when it is configured for use.

The illustrated method for intra-operative haptic planning of a surgical procedure may be implemented in software, hardware, or a combination of both software and hardware. The steps discussed herein need not be performed in the stated order. Several of the steps could be performed concurrently with each other. Furthermore, if desired, one or more of the above described steps may be optional or may be combined without departing from the scope of the present invention. Furthermore, one or more of the above described steps may be performed outside the operating room to save time spent in the operating room. For example, steps **144** and **146** may be performed prior to bringing the patient into the operating room and prior to step **142**.

A technical advantage of this exemplary embodiment for intraoperative haptic planning of a surgical procedure is that it provides for tighter coupling of the planning and execution phases of the surgical procedure. Planning for the surgical procedure is preferably performed intra-operatively with respect to the patient. Thus, when planning is complete, the haptic device is in position for executing the surgical plan. No additional motion of the haptic device is required to initiate the execution phase. Furthermore, by using a virtual tool to determine the trajectory of the real surgical tool to the target region, injury to anatomical features may be avoided during the planning phase.

A haptic object may be of any shape or size. As shown in FIG. **4**A, haptic object **26** may be funnel shaped to guide a medical device, for example a surgical tool, coupled to haptic device **113** toward a target area on anatomy **114** of the patient. The path of the haptic object may depend on a surgical plan. An algorithm may be used to create the funnel shaped haptic object illustrated in FIG. **4**A. The information desired to create the funnel shaped haptic object may be based on a surgical plan. If desired, haptic object **26** may move with haptic device **113**. This allows guidance of the surgical tool toward the target area from the current position of haptic device **113**. Thus, the surgical tool may be guided toward the target area from any position in proximity to anatomy **114**. Furthermore, the surgical tool may be guided from a current pose to a desired pose.

Haptic object **26** may be of any shape, for example, a line, a curve, a cylinder, a funnel, and/or the like. Haptic object **26** is, in the illustrated example, defined as a virtual pathway to facilitate interactive positioning of haptic device **113** and/or surgical tool **112** coupled to haptic device **113** at a desired position. Haptic object **26** guides surgical tool **112** coupled to haptic device **113** from an initial position and/or pose toward a target area and/or a desired pose relative to anatomy **114** of the patient. If desired, haptic object **26** may guide surgical tool **112** to the target area along a path or trajectory **28**. The path or trajectory **28** from the initial position to the target area may depend on the surgical plan. The path may be of any shape, for example a straight line, a curve, a funnel, a cylinder, and/or the like. Based at least in part on haptic object **26**, haptic forces are applied to haptic device **113** as the user moves the surgical tool or haptic

device to guide the user in moving the surgical tool **112** along path **28** toward the target area.

Haptic object **26** is preferably steerable or reconfigurable. For example, the haptic object may be defined to move or to change position and/or orientation as the haptic device (or the surgical tool or instrument coupled to it) moves. This allows, for example, the user to guide surgical tool **112** toward the target area from almost any position in proximity to anatomy **114**. This reconfigurability or steerability of haptic object **26** also allows the user to guide surgical tool **112** to the desired pose from its current position and/or pose.

Haptic object **26** may also be allowed to move from a pre-defined path or position in order to avoid obstacles, preferably without deviating from the target area. This is especially useful in avoiding obstacles in the path of haptic device **113** that computer-assisted surgery system **11** may not be aware of Thus, surgical tool **112** may be steered by the user toward the target area without colliding with other surgical tools and equipment, the patient, or operating room staff.

Steering, moving or reconfiguring is, in a preferred embodiment, in response to application of a force or torque on the haptic device or the haptic object that exceeds a threshold value. For example, if the user pushes haptic device **113** against the haptic object with a force that exceeds a threshold, then the haptic object will be repositioned, reconfigured or modified to a new configuration based on the input force or torque. Preferably, haptic object **26** moves in the direction of the force or torque thereby providing an intuitive method for repositioning or realigning haptic object **26**.

If desired, haptic object **26** may move to a new location if the target area is changed. Thus, as shown in FIG. **4**A, haptic object **26** may be moved from an initial position to a new position, as shown by haptic object **26'**, in response to a change in the target area.

In an alternative embodiment, haptic object **26** may be defined as virtual linear or non-linear springs, dampers, clutches, and/or the like, logically applied to one or more joints of haptic device **113**. One or more joints of haptic device **113** may comprise virtual detents corresponding to the final desired pose of haptic device **113**. Preferably, standard joint-space control techniques are used to implement the haptic objects at each joint and conventional inverse kinematics techniques are used to determine the joint positions corresponding to the desired Cartesian position/angle of the haptic device. The user may avoid obstacles by specifying the sequence in which the joints of haptic device **113** "lock" into their detents. The user may be permitted to modify the selected sequence by "unlocking" joints during positioning of surgical tool **112**, especially if the sequence is determined through a trial-and-error technique. Interactive unlocking of a joint by the user may be based on the magnitude, duration or dynamic property of the force and/or the torque at that joint by the user. A graphical user interface, a footswitch, a keyboard, a button, and/or the like, communicatively coupled to haptic device **113** may be used to unlock a joint. If desired, once the desired pose is achieved, the ability to unlock the joints may be disabled to prevent inadvertent motion of haptic device **113**.

In another alternative embodiment, haptic object **26** may be defined by virtual linear or non-linear springs, dampers, clutches, and/or the like, logically associated with one or more redundant degrees-of-freedom of haptic device **113**. For example, if a haptic device comprising of four joints is used to position the tip of surgical tool **112**, then the haptic device **113** may be moved along one of the degrees-of-freedom without affecting the position of the tip. Haptic object **26** may be associated with the redundant degree-of-freedom to permit the user to interactively modify the position of haptic device **113**.

FIG. **4**B is a flowchart of a method **170** for interactive haptic positioning of a medical device, for example surgical tool **112** mounted to haptic device **113**, using a reconfigurable or steerable haptic object **26**, all as shown in FIG. **4**A. If desired, the reconfigurability of the haptic object may be user-configurable such that the user may turn this feature ON or OFF depending on the application or depending on the step of a particular application. When the reconfiguration feature is enabled, method **170** is preferably executed periodically.

In step **172**, a determination is made as to whether the medical device is in a desired pose. This determination may be made by using sensing information from one or more position sensors, such as encoders or resolvers, which may be integrated in the haptic device. If desired, this determination may be made by using sensing information from an external device, such as a laser interferometer, a camera, and/or other tracking device.

If in step **172**, it is determined that the medical device is in the desired pose, then in step **174**, haptic interaction forces and/or torques to maintain the pose of the medical device are determined. This determination may be made based at least in part on the position and/or velocity of the haptic device and/or the medical device relative to the desired pose. Any control algorithm now known or later developed may be used for this determination, for example, robust control, adaptive control, hybrid position/force control, Proportional-Derivative (PD) control, Proportional-Integral-Derivative (PID) control, Cartesian based control, inverse Jacobian control, transpose Jacobian control, and/or the like. The determined haptic interaction forces and/or torques may be transformed and provided to the haptic device. If in step **172**, it is determined that the medical device is not in the desired pose, then in step **176**, haptic interaction forces and/or torques to maintain the medical device within a haptic object are determined so that the medical device may be guided toward the target area. In step **178**, a determination is made as to whether the result of at least one scalar valued function of the haptic interaction forces and/or torques calculated in step **176** exceeds at least one reconfiguration threshold. The reconfiguration threshold may be user-configurable. A scalar valued function computes a value based on one or more input values. In an exemplary embodiment, the scalar valued function may be the square root of the sum of the squares of the input values. A scalar valued function may be applied to one or more haptic interaction forces to provide a scalar value. The resulting scalar value may be compared to the reconfiguration threshold. Dynamic properties of the haptic interaction forces and/or torques, such as direction, duration, and/or the like, may also be considered.

If the result of none of the scalar valued functions exceeds the reconfiguration threshold, then the process ends. Otherwise in step **180**, haptic object **26** is modified based at least in part on the haptic interaction forces and/or torques. For example, if the surgeon guides the haptic device such that the haptic device in effect pushes against the haptic object, the value of the scalar valued function of the haptic interaction forces and/or torques generated to keep the haptic device within the haptic object may exceed the reconfiguration threshold. In such a case, it is desirable that the haptic object be modified, for example in the direction of the force applied by the surgeon such that the surgical tool is main-

tained within the haptic object. The modification of the haptic object may comprise changing the size of the haptic object, changing the shape of the haptic object, pivoting the haptic object along the target area of the patient's anatomy, and/or the like.

A technical advantage of this exemplary embodiment for interactive haptic positioning of a medical device is that by modifying a haptic object based on the haptic interaction forces and/or torques, greater flexibility is provided to the surgeon. Thus, the surgeon may approach the target area without colliding with other surgical tools and equipment, the patient or operating room staff, and still be provided with haptic cues to enable the surgeon to guide the surgical tool to the target area.

The illustrated method for interactive positioning of a haptic device using a reconfigurable (repositionable, steerable) haptic object may be used in any situation where it is desirable to move the haptic device, optionally coupling a component of interest, such as a medical device, for example a surgical tool, and/or the like, within a cluttered or safety-critical environment. If desired, the haptic device itself may be the component of interest. The illustrated method may be used in a variety of applications, such as a procedure where virtual constraints and/or haptic cues are used to move the component of interest into a predefined location and/or orientation and safety or other concerns make autonomous device motions undesirable. For example, the method may be used in an implant placement procedure, a biopsy procedure, deposition of therapeutic implants, diagnostic palpation of internal or external anatomy, tumor removal, radiation therapy, artistic or commercial sculpting, artistic or commercial painting, scientific or engineering experiments, such as surface digitizing, sample collection, circuit board probing, manual assembly, fabrication or testing of mechanical and/or electronic components or assemblies, material handling, and/or the like.

For rehabilitation and/or physical therapy applications, a haptic device may be coupled to the patient using an orthotic device, which may require the patient to grasp a handle. In such an embodiment, the haptic device may be coupled to a computer system having a user console. The computer system may or may not be a CAS system, but may be a computer system designed for rehabilitative or physical therapy applications. If desired, the computer system may be integrated with computer **10**. The orthotic device may have straps, braces, shells, or cast features to provide a firm or loose connection as desired. The orthotic device allows the haptic device to guide, monitor, and/or assist rehabilitative motions or other exercises. For example, the patient or a therapist may couple the patient's arm or leg to the haptic device and lead it through a desired motion while the haptic device records the properties of the motion. The motion can then be repeated multiple times without the assistance of the therapist. The haptic device may also be used to monitor the patient's efforts to move by noticing how much effort is required to move the patient, or through the use of force sensing devices which may be coupled to the haptic device at or near the location where the patient interfaces with the haptic device. The haptic device may also be used to simply constrain the patient's motion to the defined path which requires the patient to advance along the defined path using their own strength. Modes where there is a shared effort between the patient and the haptic device may also be advantageous. It is desirable that when used in this manner, the haptic device operate in a safe manner because it is so close to the patient, who may have only partial function in one or more extremities. It may be undesirable for the haptic device to move to new positions automatically or autonomously. However, it may be desirable to reposition the haptic device, for example to permit initial attachment to or grasping by the patient, so that the haptic device may be moved to different starting positions between different exercises or repetitions of the same exercise, or in the course of performing the rehabilitative motions or exercises. A physical therapist may provide the interactive input for repositioning the haptic device. If desired, the patient may provide such input while interfacing with the haptic device.

The illustrated method for interactive haptic positioning of a surgical tool using a reconfigurable or steerable haptic object may be implemented in software, hardware, or a combination of both software and hardware. The steps discussed herein need not be performed in the stated order. Several of the steps could be performed concurrently with each other. Furthermore, if desired, one or more of the above described steps may be optional or may be combined without departing from the scope of the present invention.

Referring now to FIG. **5**, when the user interacts with a haptic object, such as haptic object **20**, it is sometimes desirable to know the magnitude of forces applied to the haptic object or the amount that a real or virtual tool or implant is penetrating the haptic object. For non-trivial haptic objects, or those with complicated two or three dimensional forms, it may be difficult to present this information in a manner that is simple for the user to understand. However, the desirable piece of information is often the local penetration distance or haptic repulsion force. While these can be up to three-dimensional vector quantities, the magnitude (or length) of such vectors, possibly in the direction of a local unit normal of the haptic object, are most useful for augmenting the haptic interaction of the user. These magnitudes are simple one-dimensional quantities and can be conveyed to the user in a variety of methods, including meters, dials, numerical displays, graphs, and other visual methods, but also with audio, tactile, haptic, or other means.

Though a complete message is conveyed directly by haptic device **113** to the hand of the surgeon, a visual or audible display can be used to support rich interactions between the user and the system. For example, well known and commercially available speech recognition techniques can be used to provide a verbal method for the user to communicate information or instructions to the computer aided surgery system. Speech output from the computer aided surgery system **11** can also be used for communicating information to the user including status information, warning messages, event notification, and responses to user queries, whether communicated verbally or through some other method. Computer monitors, projection displays, wearable displays, head-mounted displays, stereoscopic views, holographic displays, and/or other visual display devices can be used to provide schematic anatomic representations, images of diagnostic datasets, instructions or guides for the surgical procedure, depictions of virtual and haptic objects, system status information, patient information, and other information that is easily communicated over a visual display. Any other input or output device could similarly be used to augment the haptic interaction between the user and the computer surgery system.

A visual and/or audio display of the penetration into a haptic object of a predetermined stiffness of a surgical device's depth, force and/or velocity is provided. The haptic object is based upon information from the computer-assisted surgical system. The display is one-dimensional in order to

facilitate the communication of the local penetration magnitude of the surgical device into the haptic object.

During surgery, the haptic device may be used to enhance the performance of the surgeon in, for example, such tasks as holding a tool steady, making straight cuts, or moving a tool tip along a path or surface. The haptic device can replace mechanical cutting jigs and alignment apparatus used for aiding in the placement of and preparation of anatomy for implanted medical devices. Virtual haptic surfaces may be used to replace physical cutting blocks. The virtual haptic surfaces in this instance are preferably software entities that can be easily and cheaply created from the models of the implant. The virtual haptic surfaces can be created with curved shapes, which more closely match the underlying anatomy and enable implant designs that require less bone or tissue removal.

Sculpting of a physical object, such as a bone, frequently requires multiple planar features to be created in the bone and/or on the surface of the bone. A haptic object may be defined to assist in such sculpting. The shape of the defined haptic object may correspond substantially to the desired resulting shape of the physical object after sculpting. The physical object and the haptic object may have segments or surfaces with abrupt transitions and/or may have portions with short radius of curvature. As such, it is possible that a surgical tool coupled to the haptic device and being used to sculpt the physical object may abruptly fall off one segment causing unintentional damage to the physical object or other objects in the vicinity of the physical object, or be distracting or disturbing to the user. A segment may be one-dimensional, two-dimensional or three-dimensional.

In order to address this problem, haptic object is dynamically modified during sculpting in order to prevent the surgical tool or the haptic device from following an abrupt transition from one segment of the haptic object to another segment. Preferably, the haptic object remains in the modified form only so long as it is desirable to prevent abrupt transitioning of the surgical tool or the haptic device from one segment to another. Once the cutting or portion thereof is complete, the haptic object may be returned to its original configuration, for example to its original shape, size, orientation, and/or the like. The modification of the haptic object may comprise creating another haptic segment that prevents the surgical tool from following an abrupt transition from one segment of the haptic object to another segment of the haptic object, modifying an existing segment of the haptic object, for example by extending the existing segment beyond its boundary, and/or the like.

FIG. **6**A illustrates an exemplary haptic device being used for haptic sculpting of physical objects with high curvature. FIG. **6**B illustrates an exemplary haptic object **20** for haptic sculpting of physical objects with high curvature. Referring now to FIGS. **6**A and **6**B, in certain cases, the desired shape for an anatomical region to be prepared with the aid of a haptic object may include sharp external edges. It is difficult to properly execute cuts without slipping off these edges, resulting in rounding of the edges and other unwanted artifacts in the resulting contour of the anatomy. An improved method for preparing these types of shapes involves dynamically enabling and disabling portions of the haptic surface. In particular, this method is helpful if a haptic object contains at least one sharp external edge where the local angle between the two portions joined by the edge as depicted in FIGS. **6**A and **6**B is less than 180 degrees. The method includes a way of selecting one of these portions, which may include any of the user input modalities mentioned herein, but the preferred method is based on proximity to the haptic object. When one of the portions is selected, that portion of the haptic object is extended beyond the joining edge to provide a continuous guide surface. When the extension is no longer required, the user can return the haptic object to its original configuration by moving the haptic arm away from the portion or using any other input modality.

For example, in a total or unicompartmental knee replacement procedure, multiple planar cuts are often required to prepare the femur for the femoral implant. A haptic object is defined in software that contains portions closely related to the desired femoral cuts. In experiments, when the user attempts to resect the bone using a cutting burr mounted in the haptic arm using the full haptic object, it is difficult to make the straight cuts without slipping from one portion to another and frequently moving the burr beyond the desired region. This slipping may result in damage to tendons, blood vessels, ligaments, and other structures and distract the user. If instead, each cutting plane of the haptic object is extended when the user brings the cutting burr within close proximity to that portion, it is much easier to create straight cuts without moving beyond the local anatomical site. The portion is returned to its original extent by simply moving back away from it, at which time the user can bring the cutting burr into contact with any of the other portions to extend them in a similar manner. While foot pedals, voice commands, or other input modalities can be used to control the extension of each plane, controlling them in the preferred manner described previously requires no additional hardware and is extremely simple for the user. However, a visual display of the haptic object and the extended portion is also helpful for helping the user to understand more complex haptic objects, especially where their view of the cutting is limited due to obstructions or a minimally-invasive technique.

FIG. **6**A shows an exemplary system for dynamically extending a haptic object. A representation of the physical object, for example the anatomy of the patient to be sculpted, may be displayed on display device **30**. The representation of the physical object may comprise a two-dimensional or three-dimensional drawing or image. The image could be, for example, a two-dimensional medical diagnostic dataset or a three-dimensional medical diagnostic dataset of the patient. In FIG. **6**A, haptic object **20** includes two different portions (**20'** and **20"**) divided by a well defined edge **21**. When haptic device **113**, the surgical tool, or the virtual surgical tool comes within a predefined distance, say R**1**, of one portion, say portion **20'**, that portion of haptic object **20** is activated. If desired, the activated portion of the haptic object **20** may be extended as shown by the broken lines **23** in FIG. **6**A. When haptic device **113** moves to within a predefined distance of another portion, say portion **20"**, the new portion of haptic object **20** may be activated. If desired, the newly activated portion of haptic object **20** may be extended.

It is desirable that haptic object **20** with high curvature be logically divided into or be approximated by a plurality of portions or segments without high curvature. For example, as shown in FIG. **6**A, haptic object **20** may be logically divided into a plurality of portions **20'** and **20"** separated by an edge **21**. Although, it is preferable to logically divide a haptic object into a plurality of segments, the haptic object itself may be defined using a logical combination of a plurality of segments. For example, a plurality of segments may be initially defined and the haptic object may be defined as a logical combination of one or more of the plurality of segments. If desired, the haptic object may comprise a

regular or irregular arrangement of volume elements, or voxels, some or all of which may be labeled. It may be desirable to only label the voxels on the surface of the object in this manner.

FIG. **6**C is a flowchart of a method **120** for dynamically modifying a haptic object, such as haptic object **20** of FIGS. **6**A and **6**B. If desired, the dynamic modification feature may be user-configurable such that the user may turn this feature ON or OFF depending on the application or depending on the step of a particular application. When the dynamic modification feature is enabled, method **120** is preferably executed periodically.

In step **122**, a determination is made as to whether a configuration of the haptic object, say haptic object **20**, has already been modified, for example by modifying a segment of the haptic object or by adding a new segment. In the preferred embodiment, the value of a configuration flag may be checked to determine if haptic object **20** has already been modified. If haptic object **20** has not already been modified, then in step **124**, a determination is made as to whether one or more criteria for modifying the configuration of haptic object **20** is satisfied. The criteria may be proximity of surgical tool **112** coupled to haptic device **113** to haptic object **20**, penetration of haptic object **20** by surgical tool **112**, gestural motions of surgical tool **112**, gestural or other motion of surgical tool **112** relative to the position of haptic object **20**, a fixed or variable time period, detection of an unwanted slippage over edge **21**, and/or the like. If desired, the criteria may be proximity of the representation of surgical tool **112** to haptic object **20**, penetration of the boundaries of haptic object **20** by the representation of surgical tool **112**, gestural or other motion of the representation of surgical tool **112** relative to the position of haptic object **20**, and/or the like. When modification of the configuration of haptic object **20** comprises modifying a segment of haptic object **20**, preferably the same criteria is used to determine if any of the segments should be modified. However, if desired, different segments may be modified based on different criteria. In such an embodiment, each of the plurality of segments may have one or more criteria associated with it.

If in step **124**, it is determined that at least one criteria for modifying the configuration of haptic object **20** is satisfied, then in step **126**, the segment to be modified is selected. Alternatively, a segment in proximity to which a new haptic segment is to be created may be selected in step **126**. In an alternative embodiment, the process starting at step **126** may be executed if a predefined logical combination of a set of criteria are satisfied. Preferably, the segment that is closest to haptic device **113** is selected. However, if desired, other criteria may be used to select a segment. For example, if surgical tool **112** has crossed an edge between two or more segments since the last time method **120** was executed, then one of the segments associated with the edge that was crossed may be selected. Alternatively, the segment being penetrated by surgical tool **112** may be selected. In step **128**, the configuration of the selected segment is modified, preferably by extending the selected segment in a desired direction of movement of haptic device **113**. The configuration flag may be set to indicate that haptic object **20** has been modified.

The method for modifying the configuration of the selected segment is preferably based at least in part on the manner in which the haptic object is represented. This representation may be based on surface polygons, voxels, non-uniform rational B-splines (NURBs), constructive solid geometry, and/or any other method for representing haptic objects now known or later developed. The modified segment may be represented in any manner which may or may not be the same as those used to represent the original haptic object. Preferably, the selected segment is extended such that the extended portion is continuous with the segment along one of its high curvature edges. The extension may be flat or curved. The segment may be extended a fixed or variable distance beyond the original segment, or could be extended to intersect another portion of the haptic object or the edge of a workspace. The method used for extending the segment depends on the method used for representing the extension. For example, if a haptic object is represented with surface polygons, then the polygons that lie within the segment of interest and adjacent to one of its boundaries are identified. A neighboring segment that lies beyond the original segment and has the same normal direction as the original polygon may be enabled. For a voxel representation, the voxels may be labeled to indicate whether they behave as solid or filled regions of space for configurations of the haptic object with different extended segments, which may be automatically, semi-automatically, or manually designed. The selected neighboring segment may be added to the haptic object. Thus, as illustrated in FIG. **6**A, if portion **20'** of haptic object **20** is the selected segment, then portion **20'** may be extended beyond its original boundary, for example as shown by broken lines **23**. Alternatively, if desired, a new haptic segment may be created in proximity to the selected segment.

In step **130**, haptic interaction forces and/or torques for the haptic object are calculated. The haptic interaction forces and/or torques may be transformed and provided to haptic device **113**. For example, it may be desirable to compute appropriate forces and torques for the actuators of the haptic device to apply such that the desired haptic interaction forces and/or torques will be produced. In some cases, it may be desirable to alter position or velocity commands to the actuators to produce the desired effect. The haptic interaction forces and/or torques from the selected segment may be used to guide haptic device **113** in a desired direction away from, toward, or aligned with physical object **114** to be sculpted. The haptic interaction forces and/or torques may be repulsive, attractive, frictional, viscous, impulsive, detent, regulatory (for example designed to maintain cutting speeds or feed rates), and/or the like. If desired, the haptic interaction forces and/or torques may be calculated using a mathematical, control theory, or machine learning algorithm.

If in step **124**, it is determined that the criteria for modifying the configuration of haptic object **20** is not satisfied, then the process starting at step **130** may be executed.

If in step **122**, it is determined that the configuration of haptic object **20** has already been modified, then in step **134**, a determination is made as to whether one or more predefined criteria for maintaining haptic object **20** in the modified configuration is satisfied. These criteria may or may not be the same as those considered when the configuration of haptic object **20** was initially modified. Preferably, if at least one criterion for maintaining the haptic object in the modified configuration is satisfied, then the process starting at step **130** may be executed. Otherwise, in step **136**, the modified haptic object is returned to its original configuration. The configuration flag may be reset to indicate that haptic object **20** has not been modified. After execution of step **136**, the process starting at step **130** may be executed. In an alternative embodiment, the process starting at step

130 may be executed if in step 134 it is determined that a predefined logical combination of a set of criteria are satisfied.

As illustrated in FIG. 6A, when haptic device 113 or surgical tool 112 coupled to haptic device 113 comes within a predefined distance R1 of one portion of haptic object 20, say portion 20', that portion of haptic object 20 may be activated and modified such that it extends beyond its original boundary as shown by dashed lines 23. While haptic device 113 or surgical tool 112 is in close proximity to portion 20' or maintains contact with portion 20', portion 20' remains modified. Surgical tool 112 may be used during that time to sculpt the portion of physical object 114 corresponding to portion 20' to a desired shape. When the sculpting of the portion of physical object 114 corresponding to portion 20' is completed, the user may move haptic device 113 away from portion 20'. Portion 20' may then be returned to its original configuration. When haptic device 113 or surgical tool 112 moves to within a predefined distance of another portion of haptic object 20, say portion 20", portion 20" of haptic object 20 may be activated and modified such that it extends beyond its original boundary.

The illustrated method for dynamically modifying a haptic object may be used in a variety of applications, such as any procedure where a virtual constraint and/or haptic cues are used to guide a user using a haptic device for sculpting a physical object or shape that has high curvature. For example, the method may be used in fabrication of components for consumer or industrial products, for the reproduction or creation of artistic pieces, such as sculptures, for shaping bones in an orthopedic procedure, and/or the like.

The illustrated method for dynamically modifying a haptic object may be implemented in software, hardware, or a combination of both software and hardware. The steps discussed herein need not be performed in the stated order. Several of the steps could be performed concurrently with each other. Furthermore, if desired, one or more of the above described steps may be optional or may be combined without departing from the scope of the present invention.

A technical advantage of this exemplary embodiment for dynamically modifying a haptic object is that the sculpting of the physical object may be performed in a more controlled manner. Thus, during a surgical procedure, unintentional damage to parts of the body may be avoided and the user can feel more comfortable using the system. Another technical advantage is that the user does not have to move its attention away from the working volume when switching from one segment to another segment of the haptic object. Yet another technical advantage is that shapes with high curvature may be operated on more easily than if only the entire haptic object were used.

FIG. 8 illustrates the use of an exemplary haptic device 113 as an input device. Haptic device 113 and a haptic object 20 in real space are illustrated. Haptic device 113 may also be used as an input device, allowing information to pass from the user to CAS system 11, and providing functionality similar to common user interface devices, such as a mouse, touchpad, keyboard, joystick, flight controller, haptic joystick, or any other input device. When used as an input device, it may be used for defining anatomical reference geometry, manipulating the position and/or orientation of virtual implants, manipulating the position and/or orientation of surgical approach trajectories, manipulating the position and/or orientation of bone resections, and the selection or placement of any other anatomical or surgical feature. Haptic device 113 may also be used for more generic user interface functions, including but not limited to, moving a cursor 31 (FIG. 8), selecting buttons or other similar user interface objects, selecting pull-down menus, manipulating on-screen dials, knobs, and other controls. When in this user-input mode the haptic device can be constrained to move in only certain directions which may be defined relative to the position of a predetermined portion of the haptic device, relative to the position of the patient or a portion of the patient anatomy, or relative to images or 3-D models of schematic, virtual, atlas, or actual patient anatomical features. The predetermined portion of the haptic device may be capable of moving.

As illustrated in display 30 of FIG. 8, haptic device 113 may be used as an input device to change the position, shape, size, etc. of haptic object 20. An example of an application of haptic device 113 used in this mode is planning the placement of a knee implant. After acquiring appropriate anatomical images of the anatomy of interest, the computer surgery system enters a mode where a cursor appears on a display visible to the user. The user grasps the arm to move the position of the cursor, possibly in multiple views. When satisfied with the position of the cursor, the user fixes it in the desired position through the use of a foot pedal, button, wired or wireless control pendant, voice command, or other input, or through the application of a force or torque to the haptic arm, or moving the haptic arm in a distinctive gesture, such as a tap, twist, or other gesture that is easily distinguishable from the user interactions during the cursor positioning. After the first position is set, a second cursor is used to define the endpoint of a line connecting to the two or three-dimensional position of the first cursor. The second cursor is moved, as above, to define an anatomical axis of the femur bone and its position is fixed using one of the above mentioned techniques. The two or three dimensional position and orientation of the implant can then be manipulated by the user using the haptic device as an input device. The implant is constrained by the system such that one of its surfaces is perpendicular to the anatomical reference line, but its position and orientation can be adjusted by the user. It is also possible to allow deviations from the anatomical axis, possibly coupled with displays of such deviations relative to anatomical reference frames familiar to the user. For example, the varus/valgus angle of the implant relative to the anatomical reference line can be adjusted and displayed to allow appropriate alignment of the knee implants. This general technique can be adapted to plan the approach and/or placement of minimally invasive hip and knee implants, trauma fixation pins, pedicle screws, biopsy needles, radioactive beads, radiotherapy beam emitter, or any other medical device.

With a haptic device, the surgeon can use tools identical or very similar to those used in standard practice. By exploiting the haptic features of the device, the need for awkward teach pendants or GUI-based robot controls may be reduced or eliminated. Switching between freehand and assisted steps of a procedure is quickly performed by simply pushing the device out of the way, similar to familiar operating room objects such as microscopes and overhead lights. While the systems may be internally complex, the surgeon must be shielded from this complexity so that he can focus all of his attention on his patient.

For example, the haptic arm can hold itself at a reference position using a joint-based or Cartesian control algorithm. The user applies forces and/or torques to the arm, either on an interaction handle or end-effector or at any point on the arm, which cause the arm to deflect from the reference position. The amount and direction of the deflection is continuously communicated to the computer system to

modify the position of any desired virtual reference geometric feature or user interface object.

In another example, the haptic arm can hold itself at a reference position using a joint-based or Cartesian control algorithm but with two degrees of freedom left unconstrained. The user can then move the arm in the unconstrained directions to provide two-dimensional control of a user-interface object, such as a cursor, implant, or other geometric or virtual surface entity. A similar technique can be used for one degree of freedom manipulation of objects, such as user interface slider bars, implant lengths, positions of objects along a reference trajectory, or any other one-dimensional control such as audio volume, image brightness, object scaling, image zooming, and the like. A similar technique can be used for higher than three degree of freedom positioning of implants or virtual or haptic objects. The haptic object's position may also be constrained relative to any relevant anatomical features for a particular application. For example, a knee implant may be constrained to have the proper alignment relative to the anatomical axis of the leg, or to achieve proper ligament balance, but with the other degrees of freedom controllable by the user in the manner described above.

The stiffness or damping of the control algorithm may vary in different directions to indicate preferential directions of motion which may be aligned with any direction as described in the previous paragraph. This stiffness variation may include zero stiffness along certain directions or may lock the user to the preferred directions once the deviation from the reference position exceeds some threshold value. This stiffness variation assists with simplifying the planning process by allowing the user to focus their attention on a limited number of degrees of freedom at a time. For example, the user may set the position of an implant along one or two directions first, then set the position of the implant along an additional direction or directions without disturbing the set directions.

The stiffness and damping variations can occur automatically depending on the physical interaction of the user with the haptic device and does not require the use of another input device such as a voice command, control pendant, or foot pedal. Any such simplification has benefits in reducing service costs, simplified system use, and improved safety. This general method of planning also allows the surgeon to perform planning without having to leave the normal operating position to interact with the computer-aided surgery system or requiring an assistant to control the computer-aided surgery system or requiring the introduction of additional input devices other than the haptic device which is already being used for execution of the surgical plan. An additional benefit of this use of a haptic device is that the motion of the controlled object can be scaled relative to the motion of the arm, so that it can be positioned to a precision better than the user can position a real object, eliminating the deleterious effects of the user's hand tremor and any force disturbances arising from friction, backlash, magnetic detent forces, and other force disturbances arising from the haptic arm. It should be noted that the primary function of the object controlled by the haptic device is something other than monitoring the pose of the haptic device or monitoring the pose of a component of interest that may or may not be coupled to the haptic device.

FIGS. **7**A and **7**B illustrate the use of a haptic device and a surgical tool to define a haptic object. In the illustrated example, haptic device **113** is being used as an input device to define haptic object **182**. In order to use haptic device **113** as an input device to define haptic object **182**, the user grasps surgical tool **112** coupled to haptic device **113**. If desired, the user may grasp haptic device **113** itself. Using surgical tool **112** the user traces the boundaries of a desired region, for example a portion of the anatomy with respect to which the haptic object is to be defined. The user may trace the boundary, for example by touching the end of surgical tool **112** to portions of the desired region of the anatomy. The motion of surgical tool **112** may be recorded and the locations of the endpoints traced by the user computed. The geometry and/or location of haptic object **182** may be determined based at least in part on the location of the endpoints. A haptic device creation mode may be used to specify the desired shape of the haptic object. For example, to create a cylindrical haptic object that corresponds to a resected portion **184** of anatomy **114**, the user can trace a plurality of points on the boundary of resected portion **184**. An appropriate cylindrical haptic object may be created using any technique now known or later developed.

Material and other properties of the anatomy may be defined by probing the anatomy. For example, surgical tool **112** may include a force measurement device coupled to the tip of surgical tool **112**. Alternatively, if desired, instead of surgical tool **112**, a probe comprising a force measurement device may be coupled to haptic device **113**. When the user interfaces the force measurement device against a portion of anatomy **114**, the force may be measured by the force measurement device. The measured force may be displayed as a function of the distance the anatomy moves, if any, upon application of the force. The stiffness of that portion of anatomy **114** may be calculated as the ratio of the force to the distance. If desired, haptic device **113** itself may be interfaced with a portion of anatomy **114** and the force determined based on the torques provided by the actuators. In such an embodiment, haptic device **113** may make small or large movements or press against portions of anatomy **114** in an autonomous mode without any physical assistance from the user. The force may be determined using any Jacobian method now known or later developed. The graphical representation **186** of FIG. **7**B illustrates the force with which surgical tool **112** comes in contact with anatomy **114** as a function of displacement of anatomy **114**.

If desired, other types of sensing devices may be coupled to haptic device **113** or surgical tool **112** to determine other properties of anatomy **114**. These properties may be used to determine the type of tissue that is in proximity to haptic device **113**. Thus, haptic device **113** may be used to differentiate between hard and soft bones, healthy and diseases tissues, different types of healthy tissues, boundaries of anatomical structures, etc. Based on information received from haptic device **113**, the type of the tissue may be automatically determined by CAS system **11** and displayed on display device **30**.

FIG. **9** is a flowchart of a representative method **190** for using haptic device **113** as an input device. In step **192**, the input mode is initiated. The user may initiate the input mode by any mechanism now known or later developed. For example, the user may use a graphical user interface, a footswitch, a keyboard, a button, and/or the like, to indicate that the user desires to use haptic device **113** as an input device. Haptic device **113** may control a plurality of objects. However, it is desirable that it only control a single object at one time. As such, in step **194**, an identification of an object to be controlled is received. The controlled object may be a cursor, a button, an on-screen dial, a knob, a slider bar, or other similar user interface object, a virtual implant, a surgical approach trajectory, a bone resection, and/or the like. The user may select the object to be controlled by any

method now known or later developed, for example by selecting the object using a conventional input device.

In step **196**, a reference pose for haptic device **113** may be stored. The reference pose is preferably the current pose of haptic device **113**. For example, in this step, position information about the tip of haptic device **113** may be stored. In step **198**, the controlled object is correlated with haptic device **113**. The correlation of the controlled object with haptic device **113** is desirable so that movement of haptic device **113** may be translated or mapped into a corresponding movement or action relative to the controlled object. The correlation or mapping allows a determination of the amount or direction of movement of the controlled object in response to movement of haptic device **113**. For example, the user may specify that movement of haptic device **113** by one unit should cause a controlled object, for example cursor **31**, to move by ten pixels on display device **30**.

The user may move haptic device **113** around to control the object selected in step **194**. In step **200**, a change in pose of haptic device **113** is determined. The change in pose of haptic device **113** is preferably determined relative to the reference pose of haptic device **113**. The change in pose of haptic device **113** may comprise, for example, a change in position of the tip of haptic device **113**.

In step **202**, the reference pose of haptic device **113** may be updated. Preferably, the reference pose is updated based at least in part on the change in pose of haptic device **113**. If desired, the reference pose may be updated based at least in part on a wrench applied to haptic device by the user. The wrench may be explicitly measured by a sensor. If desired, the wrench may be implicit in that the haptic device can determine that a wrench is being applied.

In step **204**, new parameters for the controlled object are calculated. The parameters of the controlled object may be, for example its pose, position, angle, size, color, shape, orientation, view direction, brightness, contrast, table indices, status, mode, configuration, and/or the like. The new parameters may be calculated based on the change in pose of haptic device **113** and/or the wrench applied to haptic device by the user. If desired, the new parameters may be calculated based on the change in reference pose of haptic device **113**. Preferably, correlation information obtained in step **198** is used to calculate the new parameters. The new parameters may be used to change the controlled object. Thus, for example, when the controlled object is cursor **31** and there is a change in pose of haptic device **113**, then a new pose for the controlled object may be determined based on the new parameters. In step **206**, the controlled object is changed based on the new parameters. Thus, for example, if the controlled object is cursor **31**, then the position of cursor **31** on display device **30** may be changed based at least in part on the new parameters calculated in step **204**.

In step **208**, a haptic wrench applied by the haptic device to the medical device and/or the user is determined. The haptic wrench may be determined based on the new parameters of the controlled object, the change in pose of haptic device **113**, and/or the current pose of haptic device **113**.

In step **210**, the determined haptic wrench is applied to haptic device **113**. Instead of allowing haptic device **113** to be moved in any direction, it may be desirable to constrain the movement of haptic device **113**. The determined haptic wrench when applied to haptic device **113** prevents it from moving in certain undesirable directions. For example, if the controlled object is capable of moving in only one dimension, it may be desirable to constrain the motion of haptic device **113** so that haptic device **113** moves in only one direction. As another example, when the object being controlled is cursor **31** on display device **30**, then it may be desirable to constrain the movement of haptic device **113** to a two-dimensional plane corresponding to display device **30**. As a further example, if it is not desirable for haptic device **113** to move large distances from the reference pose, the haptic wrench may act to return haptic device **113** to the reference pose in one or more directions.

Within the input mode, haptic device **113** may be used in a position control mode or a rate control mode. In the position control mode, the change in pose of the controlled object tracks the change in pose of haptic device **113**. For example, if haptic device **113** is moved in a particular direction by one unit, the controlled object moves in a corresponding direction by a corresponding amount. When haptic device **113** is released, it stays in its new pose.

On the other hand, in the rate control mode, the displacement of haptic device **113** from the reference pose and/or the wrench applied to the haptic device by the user, may control the velocity of the controlled object. For example, if haptic device **113** is maintained in its reference pose (or if no wrench is applied to the haptic device by the user), then the rate of movement of the controlled object is zero. The displacement of haptic device **113** from the reference pose (or the magnitude of the wrench applied by the user to the haptic device) determines the velocity of movement of the controlled object with the velocity of movement being proportional to the displacement of the controlled object (or to the magnitude of the wrench applied to the haptic device). When it is desirable to move the controlled object, haptic device **113** is simply moved (or pushed) in the direction of the desired motion of the controlled object. When haptic device **113** is released it moves back to the reference pose due to application, in step **210**, of the haptic wrench determined in step **208**. Thus, in the rate control mode, the controlled object may be moved a substantial distance without substantially moving haptic device **113**.

In step **212**, a determination is made as to whether haptic device **113** is still operating in the input mode. If haptic device **113** is not operating in the input mode, then the process terminates. Otherwise, in step **214**, a determination is made as to whether a new object to be controlled has been specified. If a new object to be controlled has not been specified then the process starting at step **200** to determine the change in pose of haptic device **113** may be executed. Otherwise, the process starting at step **194** to receive identification of the new object to be controlled is executed.

For example, in one embodiment, the reference pose may be associated with the desired trajectory of a drill guide attached to haptic device **113**. In such an embodiment, updating the reference pose in step **202** comprises changing the desired trajectory of the drill guide. When the user moves haptic device **113** from the reference pose for a prolonged period of time, the reference pose will be updated to move in the direction of the user's deflection. If, in step **210**, an appropriate haptic feedback wrench is applied, then upon release of haptic device **113** by the user, haptic device **113** will assume the new reference pose. When the user is satisfied with the reference pose and the input mode is terminated in step **212**, haptic device **113** will be in a pose such that the drill guide is aligned with the desired trajectory.

The illustrated method for using a haptic device as an input device may be implemented in software, hardware, or a combination of both software and hardware. The steps discussed herein need not be performed in the stated order. Several of the steps could be performed concurrently with each other. Furthermore, if desired, one or more of the above

described steps may be optional or may be combined without departing from the scope of the present invention.

A technical advantage of using a haptic device as an input device in the manner described above is that the use of an additional input device may be avoided thereby reducing the clutter in the operating room.

FIG. **10** illustrates a system for conveying scalar information during a medical, surgical or interventional procedure. Haptic device **113** may be deployed as a fully integrated component of CAS system **11** or act as an optional peripheral to such a system. Location or position information of tool **112** coupled to haptic device **113** may be sensed and provided back to CAS system **11** with or without the use of sensor(s) **14**.

Medical, surgical and interventional procedures will be referred to collectively as "medical procedures." The medical procedure may involve resecting a portion of an anatomy, such as for a joint replacement, joint resurfacing, tumor removal, bone deformity correction and/or the like. If desired, the medical procedure may involve applying a synthetic, biologic, or therapeutic substance to a surface or region of interest, or placing a sensor, probe, implant or radioactive material in a desired position, surface or volume. When a user interacts, for example, with a haptic object, it is sometimes desirable to know the magnitude of forces applied to the haptic object or the amount that a real or virtual tool or implant is penetrating the haptic object. For non-trivial haptic objects, or those with complicated two or three dimensional forms, it may be difficult to present this information in a manner that is simple for the user to understand. The desirable piece of information is often the local distance to a surface of interest or to a desired position, the local penetration distance of the surface of interest, or haptic repulsion force. While these can be up to three-dimensional vector quantities, the magnitude (or length) of such vectors, possibly in the direction of a local unit normal to the haptic object, are most useful for augmenting the haptic interaction of the user. These magnitudes are simple one-dimensional quantities and can be conveyed to the user in a variety of methods, including meters, dials, numerical displays, graphs, and other visual methods, but also with audio, tactile, haptic, or other means.

In the exemplary embodiment of FIG. **10**, CAS system **11** is communicatively coupled to an audio source **216**, for example a speaker, and display device **30**. During an exemplary medical procedure, anatomy **114**, which in the embodiment of FIG. **10** is a bone, is to be cut along haptic object **20** using the surface of haptic object **20** as a guide surface. During the medical procedure, one-dimensional information, for example information regarding the scalar distance D of the tip of tool **112** from the surface of an object of interest, for example haptic object **20**, is provided to the user, preferably but not necessarily automatically. CAS system **11** may be programmed, for example, to automatically provide this scalar information based on the stage of the procedure, the type of tool being used, the tool's position or proximity to an object (including surface) of interest, or other cues that assist CAS system **11** in identifying the object with respect to which magnitude information will be determined and displayed.

In an exemplary embodiment, prior to initiation of the cutting operation, the value of D is positive. A value of zero for D indicates that the tip of cutting tool **112** is at the desired depth inside anatomy **114**. In the exemplary embodiment, the desired depth is at the surface of haptic object **20**. A negative value for D indicates that the depth of the tip of cutting tool **112** inside the bone is more than that desired. One-dimensional information may be communicated to the surgeon by any of a variety of methods, such as visual, audio, tactile, haptic, and/or the like. For example, a visual indicator **218**, for example a level meter, a dial, numerical displays, graphs, etc., may be used to indicate the value of D on display device **30** or any other device in proximity to the user. If desired, audio source **216**, visual indicator **218** and/or display device **30** may be provided closer to the user, for example on tool **112**, haptic arm **113**, other handheld tools, instruments or accessories, or wearable visual, audio, haptic, or tactile displays. For example, tool **112** may include a simple display device or a multi-colored indicator, for example a multi-colored LED indicator, a multi-colored lamp indicator, a LED level meter, and/or the like, to indicate the cutting depth to the user. In such an embodiment, the user does not need to take their attention away from the surgical working area. Similarly, tool **112** may include an audio source to indicate the cutting depth to the user. In such an embodiment, the audio indication from audio source **216** may be easily heard by the user because of its proximity to the user.

If desired, audio indicators or tones from speaker **216** may be provided instead of or in addition to visual indicator **218**. For example, a series of beeps may be provided to indicate the value of D. As the value of D decreases, the interval between the beeps may be reduced correspondingly. If desired, the beeps may turn into a buzzing or any other sound when the value of D becomes zero and into a different sound, for example, a high pitched sound when the value of D becomes negative. In an exemplary embodiment, a positive value for D is an acceptable value and a negative value for D is an unacceptable value.

An advantage of providing an audio indicator is that the surgeon does not have to take his/her eyes off the patient's anatomy, such as bone **114**. However, if the noise in the operating room makes it difficult for the surgeon to hear an audio indicator, then a visual indicator may be more appropriate.

If a haptic system or device is used, such as shown in the illustrated exemplary embodiment, a tactile indication may be provided through haptic arm **113** or through an auxiliary device. In an embodiment, haptic arm **113** vibrates to provide tactile indication to the user. The frequency, amplitude, waveform, and/or other property of vibration of haptic arm **113** is dependent on distance D. In another embodiment, a vibrating device may be provided on the user's body. The frequency, amplitude, waveform, and/or other property of vibration of the vibrating device is dependent on distance D. An advantage of providing a tactile indication is that the surgeon does not have to take his/her eyes off bone **114**.

Because the one-dimensional information is easy to communicate to the user, the user is able to focus his attention on the task of cutting knowing that an audio indication, a tactile indication or a quick glance at visual indicator **218** will inform him if he is cutting to the appropriate depth.

Depth information may also be displayed to the user in situations where the user is not using a haptic device. For example, the user may be cutting the bone freehand with a tool whose pose is tracked by a tracking system. In such an embodiment, the user does not have the benefit of the haptic feedback that will tend to apply forces to the tool that keep it on the surface of a haptic object or prevent it from penetrating a haptic object. Instead of a haptic object, a simple geometric object, e.g., a curve, a point, line, a surface or a volume, may be used as the object of interest. The object of interest may be identified to the CAS system or the CAS system may determine it based on other information it has. For example, the object of interest may be defined directly with respect to the patient or with respect to a diagnostic image of the patient, or it can be derived or determined by the CAS system from other anatomical points or features

identifiable by a user. The CAS system knows the position of the tool relative to the object of interest and displays one-dimensional depth information. In such a system, D may be calculated by determining the distance from the tip of tool **112** to the desired depth of cut of the object of interest. If desired, the object of interest may comprise a curve, a point, a surface, a line, a volume, or a set of desired positions. The object of interest may be a haptic object, a geometric object and/or the desired shape of the portion of the anatomy.

If desired, in an alternative embodiment, the one dimensional depth display may be augmented with two-dimensional representations of the cutting depth at each point on the surface or three-dimensional representations of each point in space. The two-dimensional or three-dimensional representation may be a schematic or realistic depiction of the surface of interest. A property, for example color, brightness, and/or the like, of points of the surface of interest may be based at least in part on the distance between the tool and the respective points when the tool was closest to the respective points during the medical procedure. For example, different colors may be used to denote the distance between the tool and the points. The position of the tool when it was closest to a point during the medical procedure is determined and the distance between the tool and the point calculated. The color of the point reflects the distance from the tool to the point when it was closest to that point.

FIG. **11** is a flowchart of a method **220** for conveying depth information during a medical procedure. Method **220** is preferably executed periodically. In step **222**, the distance of tool **112** from the desired surface is determined. Preferably, the distance D of the tip of tool **112** from the surface of an object, such as haptic object **20**, is determined. The process for determining a value for D depends upon how the object is represented internally. This representation of the object may be based on surface polygons, voxels, NURBs, constructive solid geometry, and/or any other method for representing geometrical objects now known or later developed. The distance from the current location of tool **112** to an appropriate point on the surface of haptic object **20** is calculated. The calculated distance is assigned a positive or negative value depending on the relative position of the tip of tool **112** and bone **114** with respect to the surface of haptic object **20**. In the example illustrated in FIG. **10**, if the tip of tool **112** and bone **114** are on opposite sides of the surface of haptic object **20**, then D is assigned a positive value. Otherwise, D is assigned a negative value.

In step **224**, the determined distance is mapped to a desired output format for display to the user. For example, the distance may be mapped to an appropriate color, audio frequency, time period, sound, image, haptic cue, and/or the like. Preferably, the mapping is performed based at least in part on the value of D. Table A below shows an exemplary mapping table for a system where visual signals are provided to the user.

TABLE A

D (Millimeter)	OUTPUT FORMAT
1-2	Green light
0.1-0.99	Yellow Light
0.0-0.09	Red Light
<0.0	Black Light

In step **226**, the determined distance is conveyed to the user in the desired output format. If the desired output format is a visual indicator, then in an exemplary embodiment an indicator of the appropriate color is displayed. For example, as specified in exemplary Table A, if the value of D is within an acceptable range, say between 1 and 2 millimeters, then a green indicator is displayed, if the value of D is between 0.1 and 0.99 millimeters, then a yellow indicator is displayed, if the value of D is between 0.0 and 0.09 millimeters, then a red indicator is displayed and if the value of D is in an unacceptable range, say less than zero, then a black indicator is displayed. In the embodiment of FIG. **10**, information about distance D is displayed by level meter **218**. As the value of D changes, the color of a level in level meter **218** is changed. If the desired output format is an audio indicator, then in an exemplary embodiment, distance information is conveyed by beeps as discussed herein with reference to FIG. **10**.

A technical advantage of an exemplary embodiment of the present invention is that during a medical procedure information about the depth of a tool may be provided to the user in a simple manner so that the user may focus his/her attention on the medical procedure.

What is claimed is:

1. A teleoperation system for use during a surgical procedure, said teleoperation system comprising:

a surgical tool;

a master input device to be moved by a user;

a slave device coupled to said surgical tool and responsive to movement of said master input device, said slave device configured to be operated in a first mode to place said surgical tool in a desired pose with respect to a target region and a second mode to manipulate said surgical tool during the surgical procedure; and

a visual indicator coupled to and disposed on said slave device and configured to emit light in said second mode to provide visual information to the user in said second mode.

2. The teleoperation system of claim **1**, wherein said visual indicator is configured to emit light in a plurality of different colors in said second mode to provide visual information to the user in said second mode.

3. The teleoperation system of claim **2**, wherein said visual indicator comprises a multi-colored LED indicator.

4. The teleoperation system of claim **3**, further comprising a display configured to display said surgical tool.

5. The teleoperation system of claim **1**, further comprising a control system configured to lock said slave device in a desired pose.

6. The teleoperation system of claim **5**, wherein said control system is configured to adjust said desired pose of said slave device in response to receiving a manual force on said slave device.

7. The teleoperation system of claim **5**, wherein said control system is configured to lock only a portion of said slave device so that the user can adjust said slave device.

8. The teleoperation system of claim **1**, further comprising a control system configured to constrain a trajectory of a tool guide passing through the target region.

9. The teleoperation system of claim **8**, wherein said control system is configured to allow the user to pivot said tool guide about a pivot point while constraining said trajectory.

10. A teleoperation system for use during a surgical procedure, said teleoperation system comprising:

a surgical tool;

a master input device to be moved by a user;

a slave device coupled to said surgical tool and responsive to movement of said master input device, said slave device configured to be operated in a first mode to place

said surgical tool in a desired pose with respect to a target region and a second mode to manipulate said surgical tool during the surgical procedure; and

a visual indicator coupled to and disposed on said surgical tool and configured to emit light in said second mode to provide visual information to the user in said second mode.

11. The teleoperation system of claim **10**, wherein said visual indicator is configured to emit light in a plurality of different colors in said second mode to provide visual information to the user in said second mode.

12. The teleoperation system of claim **11**, wherein said visual indicator comprises a multi-colored LED indicator.

13. The teleoperation system of claim **12**, further comprising a display configured to display said surgical tool.

14. The teleoperation system of claim **10**, further comprising a control system configured to lock said slave device in a desired pose.

15. The teleoperation system of claim **14**, wherein said control system is configured to adjust said desired pose of said slave device in response to receiving a manual force on said slave device.

16. The teleoperation system of claim **14**, wherein said control system is configured to lock only a portion of said slave device so that the user can adjust said slave device.

17. The teleoperation system of claim **10**, further comprising a control system configured to constrain a trajectory of a tool guide passing through the target region.

18. The teleoperation system of claim **17**, wherein said control system is configured to allow the user to pivot said tool guide about a pivot point while constraining said trajectory.

19. A method for using a teleoperation system during a surgical procedure, the teleoperation system comprising a surgical tool, a master input device to be moved by a user, a slave device coupled to the surgical tool, and a visual indicator on the slave device, the slave device operable in a first mode to place the surgical tool in a desired pose with respect to a target region in response to a manual force applied to the slave device, said method comprising the steps of:

controlling the slave device in a second mode, different than the first mode, to manipulate the surgical tool during the surgical procedure in response to movement of the master input device by the user; and

in the second mode, visually indicating information to the user by emitting light with the visual indicator on the slave device.

20. The method of claim **19**, further comprising emitting light in a plurality of different colors in the second mode to provide visual information to the user in the second mode.

21. The method of claim **20**, wherein the visual indicator comprises a multi-colored LED indicator.

22. The method of claim **21**, further comprising displaying the surgical tool on a display.

23. The method of claim **19**, further comprising locking the slave device in a desired pose.

24. The method of claim **23**, wherein locking the slave device in the desired pose is further defined as locking only a portion of the slave device so that the user can adjust the slave device.

25. The method of claim **19**, further comprising constraining a trajectory of a tool guide passing through the target region.

26. The method of claim **25**, further comprising enabling the tool guide to be pivoted about a pivot point while constraining the trajectory.

27. The teleoperation system of claim **1**, wherein said slave device comprises a robotic arm with said visual indicator coupled to and disposed on said robotic arm.

* * * * *