US011863340B2

(12) **United States Patent**
Jun et al.

(10) **Patent No.: US 11,863,340 B2**
(45) **Date of Patent: Jan. 2, 2024**

(54) **METHOD AND SYSTEM FOR CONTROLLING HOME APPLIANCE**

(71) Applicant: **SAMSUNG ELECTRONICS CO., LTD.**, Suwon-si (KR)

(72) Inventors: **Joonsik Jun**, Suwon-si (KR); **Heungryong Oh**, Suwon-si (KR)

(73) Assignee: **SAMSUNG ELECTRONICS CO., LTD.**, Suwon-si (KR)

(*) Notice: Subject to any disclaimer, the term of this patent is extended or adjusted under 35 U.S.C. 154(b) by 0 days.

(21) Appl. No.: **17/944,808**

(22) Filed: **Sep. 14, 2022**

(65) **Prior Publication Data**

US 2023/0083403 A1 Mar. 16, 2023

Related U.S. Application Data

(63) Continuation of application No. PCT/KR2022/013672, filed on Sep. 14, 2022.

(30) **Foreign Application Priority Data**

Sep. 14, 2021 (KR) 10-2021-0122773

(51) **Int. Cl.**
H04L 12/28 (2006.01)
H04W 4/80 (2018.01)
(Continued)

(52) **U.S. Cl.**
CPC ***H04L 12/2809*** (2013.01); ***H04L 12/2827*** (2013.01); ***H04W 4/023*** (2013.01);
(Continued)

(58) **Field of Classification Search**
CPC H04L 12/2809; H04L 12/2827; H04L 2012/2841; H04W 4/80; H04W 4/023; H04W 84/18
(Continued)

(56) **References Cited**

U.S. PATENT DOCUMENTS

8,548,519 B2 10/2013 Onozawa
8,600,295 B2 12/2013 Rappaport
(Continued)

FOREIGN PATENT DOCUMENTS

CN 210042235 U 2/2020
JP 2007-158447 A 6/2007
(Continued)

OTHER PUBLICATIONS

MQTT-Based Surveillance System of IoT Using UWB Real Time Location System Norrdine et al. International Conferences on Internet of Things (iThings) and IEEE Green Computing 2020 (pp. 216-221).*

(Continued)

Primary Examiner — Tauqir Hussain
(74) *Attorney, Agent, or Firm* — Sughrue Mion, PLLC

(57) **ABSTRACT**

A method of controlling a home appliance includes receiving a distance measurement request signal from a user equipment; transmitting, based on the received distance measurement request signal, an ultra-wideband (UWB) communication module activation signal to the user equipment and a second home appliance that includes a UWB antenna; receiving, from the second home appliance, a location measurement value of the user equipment measured with respect to the second home appliance, the location measurement value being based on a UWB signal between the user equipment and the second home appliance; determining location information about the user equipment, based on the location measurement value of the user equipment; receiving, from a first home appliance that does not include a UWB antenna, information about the first home appliance; and registering the first home appliance in the server device, based on the received information about the
(Continued)

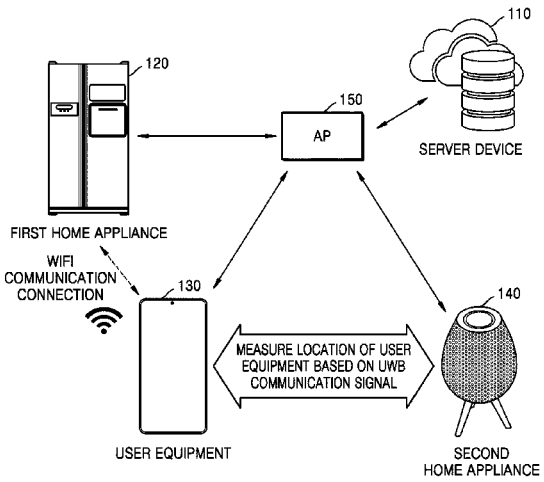

first home appliance and the location information about the user equipment.

20 Claims, 24 Drawing Sheets

(51) **Int. Cl.**
H04W 4/02 (2018.01)
H04W 84/18 (2009.01)

(52) **U.S. Cl.**
CPC ***H04W 4/80*** (2018.02); *H04L 2012/2841* (2013.01); *H04W 84/18* (2013.01)

(58) **Field of Classification Search**
USPC 709/223
See application file for complete search history.

(56) **References Cited**

U.S. PATENT DOCUMENTS

11,070,568	B2 *	7/2021	Ektare	H04L 43/10
11,082,296	B2 *	8/2021	Du	H04L 41/065
11,087,005	B2 *	8/2021	Cheng	H04L 63/0227
11,115,799	B1 *	9/2021	Du	H04L 63/205
11,394,729	B2 *	7/2022	Verma	H04L 63/1433
11,405,778	B2 *	8/2022	Omsberg	H04W 12/63
11,451,571	B2 *	9/2022	Du	H04L 63/20
2016/0149716	A1 *	5/2016	Raj	H04L 12/2827 700/275
2016/0150298	A1 *	5/2016	Kim	H04Q 9/00 340/870.02
2016/0233678	A1 *	8/2016	Tuller	D06F 33/46
2017/0195318	A1 *	7/2017	Liu	H04L 67/10
2018/0295148	A1 *	10/2018	Mayorgo	H04L 63/20
2019/0255893	A1 *	8/2019	Van Wiemeersch	B60C 23/0479
2019/0289648	A1 *	9/2019	Kim	H04W 8/26
2019/0357339	A1 *	11/2019	Kim	H05B 47/105
2020/0322177	A1 *	10/2020	Kim	G05B 19/042
2021/0106134	A1 *	4/2021	Deng	A47B 9/10
2021/0320681	A1	10/2021	Baek et al.	
2022/0001836	A1	1/2022	Baek et al.	
2023/0231591	A1 *	7/2023	Russell	H04B 1/38 455/552.1

FOREIGN PATENT DOCUMENTS

KR	10-1745709	B1	6/2017
KR	10-1902715	B1	9/2018
KR	10-2019-0066141	A	6/2019
KR	10-2003797	B1	8/2019
KR	10-2019-0115513	A	10/2019
KR	10-2060815	B1	12/2019
KR	10-2072097	B1	1/2020
KR	10-2020-0049269	A	5/2020
KR	10-2521850	B1	4/2023
KR	10-2551302	B1	7/2023

OTHER PUBLICATIONS

Norrdine, Abdelmoumen, et al., "MQTT-Based Surveillance System of IoT Using UWB Real", 2020 International Conferences on Internet of Things (iThings) and IEEE Green Computing and Communications (GreenCom) and IEEE Cyber, Physical and Social Computing (CPSCom) and IEEE Smart Data (SmartData) and IEEE Congress on Cybermatics (Cybermatics), Nov. 2, 2020, pp. 216-221. (7 pages total).

Lee, Youngjae et al., "IoT-based data transmitting system using a UWB and RFID system in smart warehouse", 2017 Ninth International Conference on Ubiquitous and Future Networks (ICUFN), Jul. 4, 2017, pp. 545-547. (4 pages total).

Ling, Rejina Wei Choi, et al., "High precision UWB-IR indoor positioning system for IoT applications", 2018 IEEE 4th World Forum on Internet of Things (WF-oT), Feb. 5, 2018, pp. 135-139. (6 pages total).

International Search Report and Written Opinion dated Dec. 28, 2022 by the International Searching Authority in International Patent Application No. PCT/KR2022/013672. (PCT/ISA/220, PCT/ISA/210 & PCT/ISA/237).

Xiaomi, "Introducing Xiaomi UWB Technology", 2020, https://www.youtube.com/watch?v=DGBxL3Ndhww(0:23-1:25 & screen shot).

* cited by examiner

FIG. 1

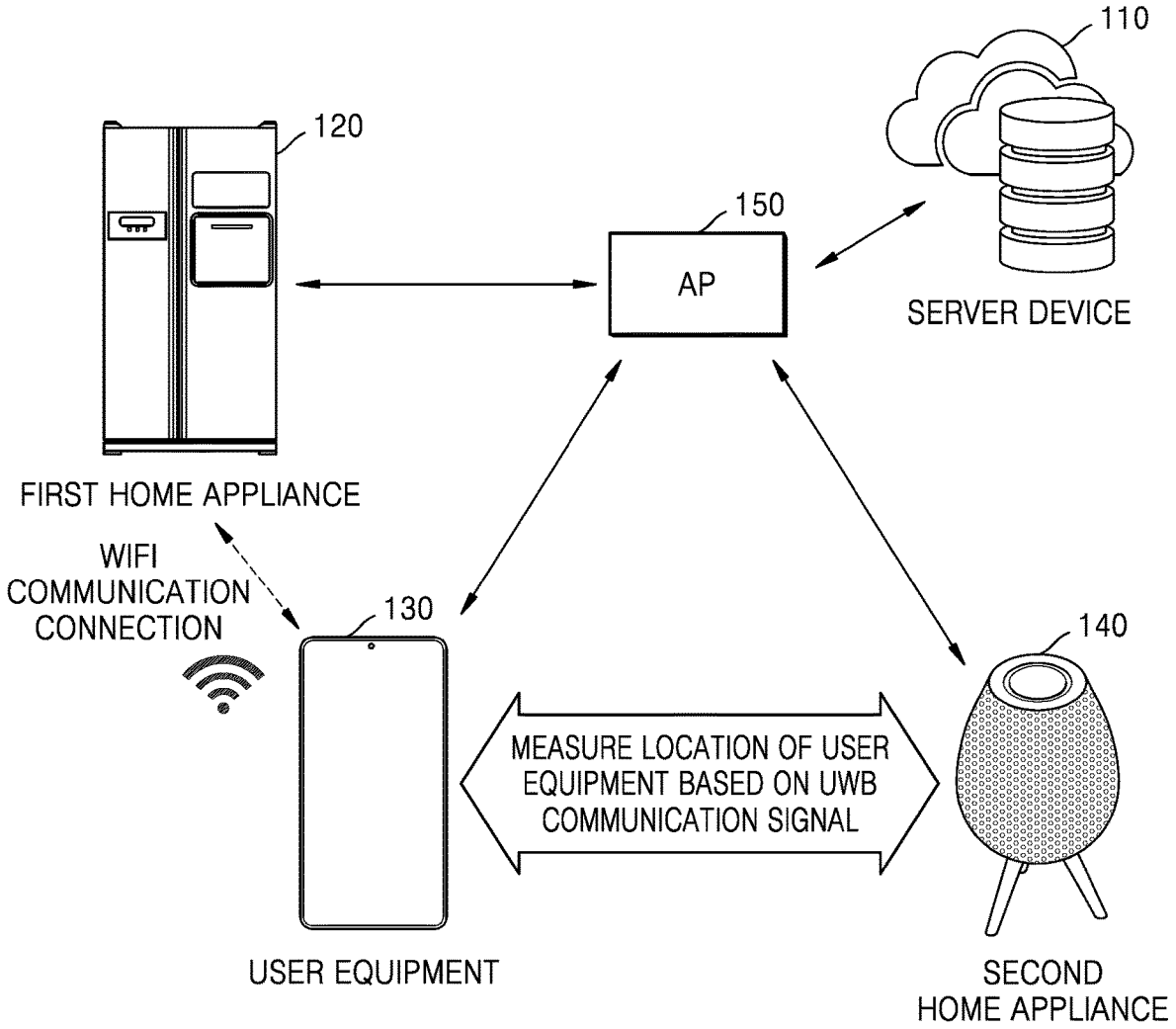
110
120
150
AP
SERVER DEVICE
FIRST HOME APPLIANCE
WIFI
COMMUNICATION
CONNECTION
130
140
MEASURE LOCATION OF USER
EQUIPMENT BASED ON UWB
COMMUNICATION SIGNAL
USER EQUIPMENT
SECOND
HOME APPLIANCE

FIG. 2

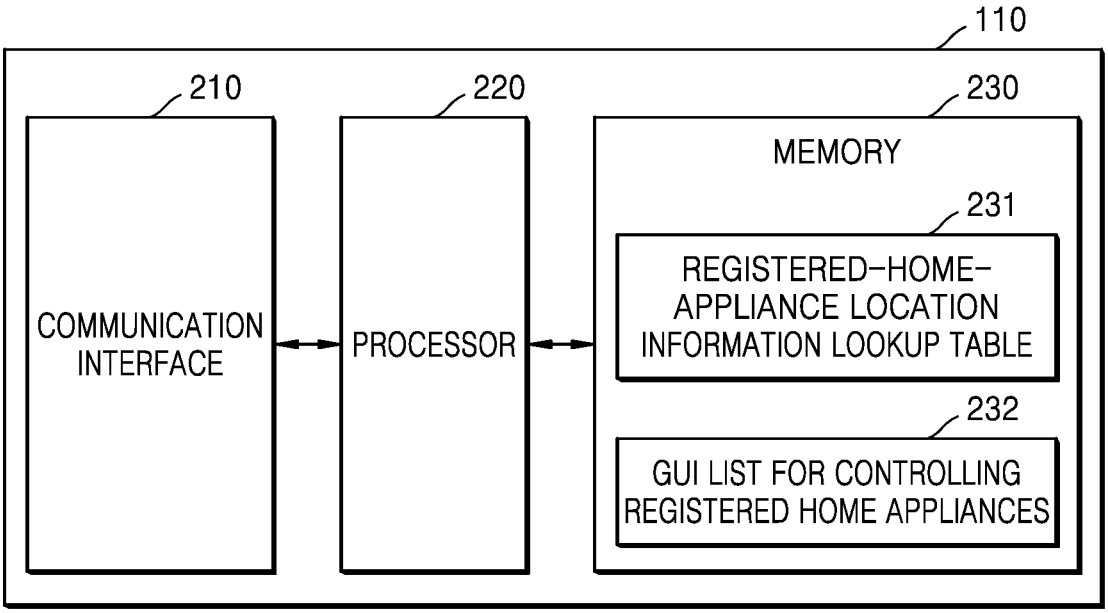
110
210
220
230
MEMORY
231
COMMUNICATION INTERFACE
PROCESSOR
REGISTERED-HOME-APPLIANCE LOCATION INFORMATION LOOKUP TABLE
232
GUI LIST FOR CONTROLLING REGISTERED HOME APPLIANCES

FIG. 3

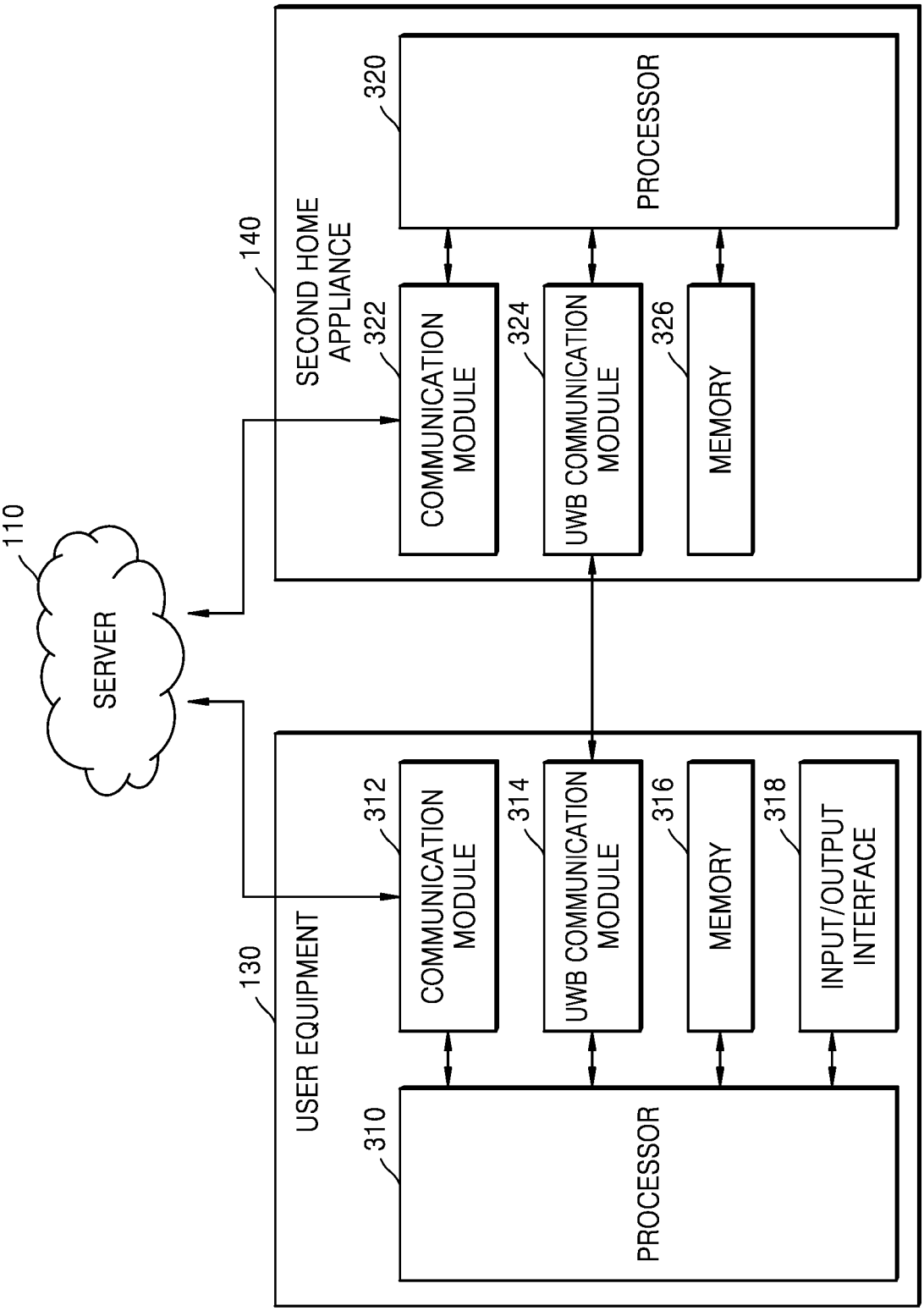
110
SERVER
140
SECOND HOME APPLIANCE
320
PROCESSOR
322
COMMUNICATION MODULE
324
UWB COMMUNICATION MODULE
326
MEMORY
130
USER EQUIPMENT
310
PROCESSOR
312
COMMUNICATION MODULE
314
UWB COMMUNICATION MODULE
316
MEMORY
318
INPUT/OUTPUT INTERFACE

FIG. 4

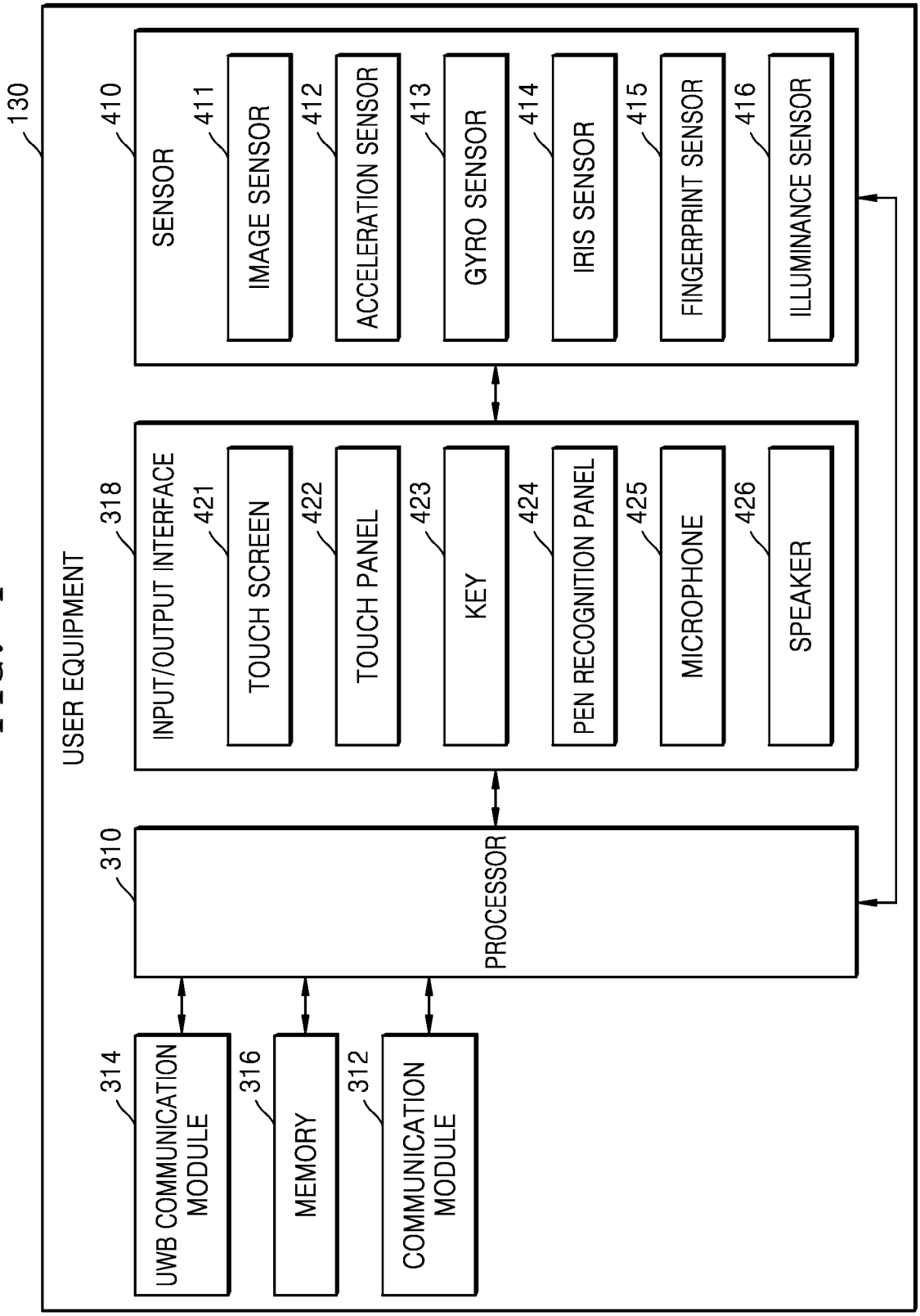
130
USER EQUIPMENT
410
SENSOR
411
IMAGE SENSOR
412
ACCELERATION SENSOR
413
GYRO SENSOR
414
IRIS SENSOR
415
FINGERPRINT SENSOR
416
ILLUMINANCE SENSOR
318
INPUT/OUTPUT INTERFACE
421
TOUCH SCREEN
422
TOUCH PANEL
423
KEY
424
PEN RECOGNITION PANEL
425
MICROPHONE
426
SPEAKER
310
PROCESSOR
314
UWB COMMUNICATION MODULE
316
MEMORY
312
COMMUNICATION MODULE

FIG. 5

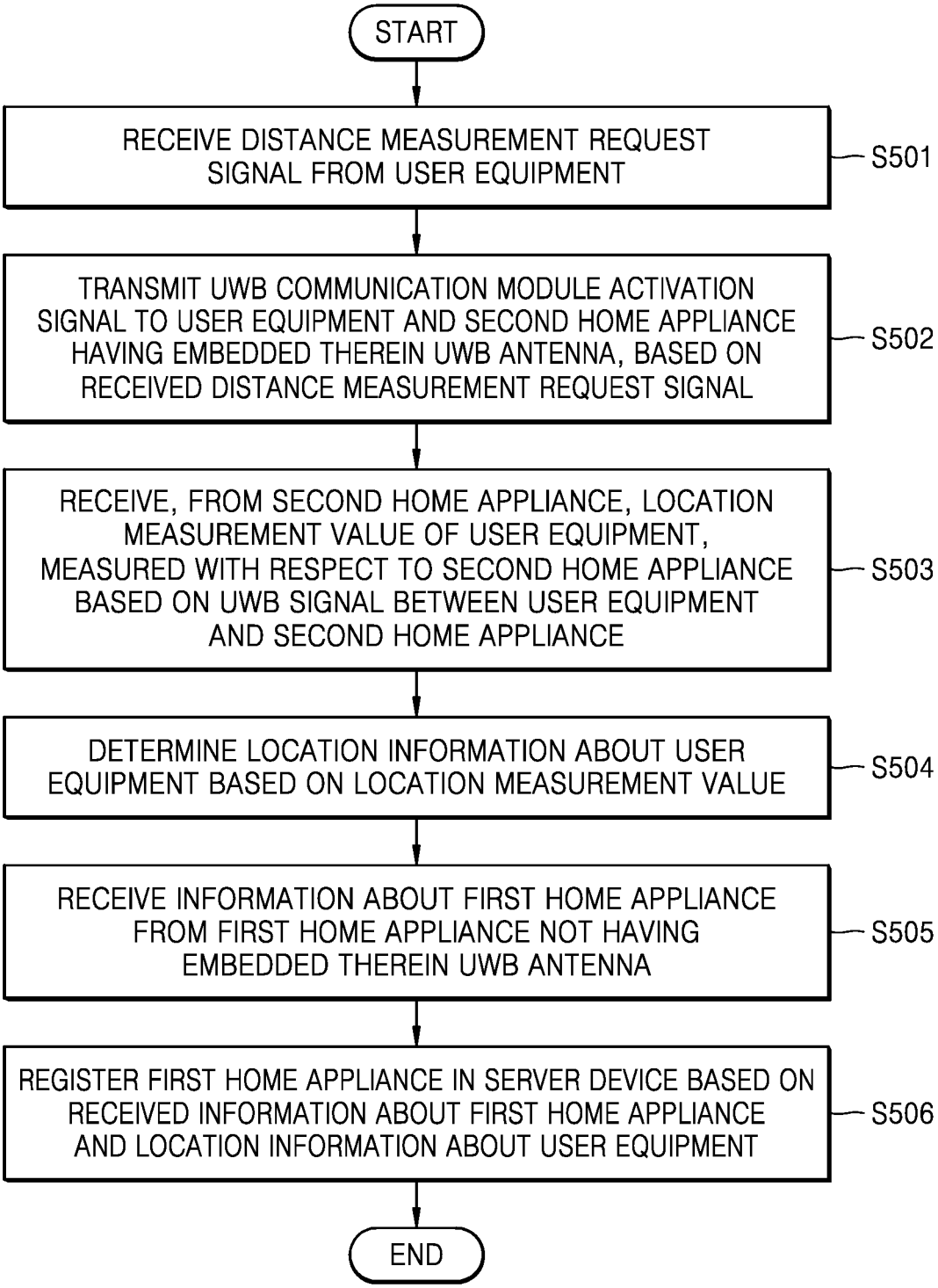
START
RECEIVE DISTANCE MEASUREMENT REQUEST SIGNAL FROM USER EQUIPMENT
S501
TRANSMIT UWB COMMUNICATION MODULE ACTIVATION SIGNAL TO USER EQUIPMENT AND SECOND HOME APPLIANCE HAVING EMBEDDED THEREIN UWB ANTENNA, BASED ON RECEIVED DISTANCE MEASUREMENT REQUEST SIGNAL
S502
RECEIVE, FROM SECOND HOME APPLIANCE, LOCATION MEASUREMENT VALUE OF USER EQUIPMENT, MEASURED WITH RESPECT TO SECOND HOME APPLIANCE BASED ON UWB SIGNAL BETWEEN USER EQUIPMENT AND SECOND HOME APPLIANCE
S503
DETERMINE LOCATION INFORMATION ABOUT USER EQUIPMENT BASED ON LOCATION MEASUREMENT VALUE
S504
RECEIVE INFORMATION ABOUT FIRST HOME APPLIANCE FROM FIRST HOME APPLIANCE NOT HAVING EMBEDDED THEREIN UWB ANTENNA
S505
REGISTER FIRST HOME APPLIANCE IN SERVER DEVICE BASED ON RECEIVED INFORMATION ABOUT FIRST HOME APPLIANCE AND LOCATION INFORMATION ABOUT USER EQUIPMENT
S506
END

FIG. 6

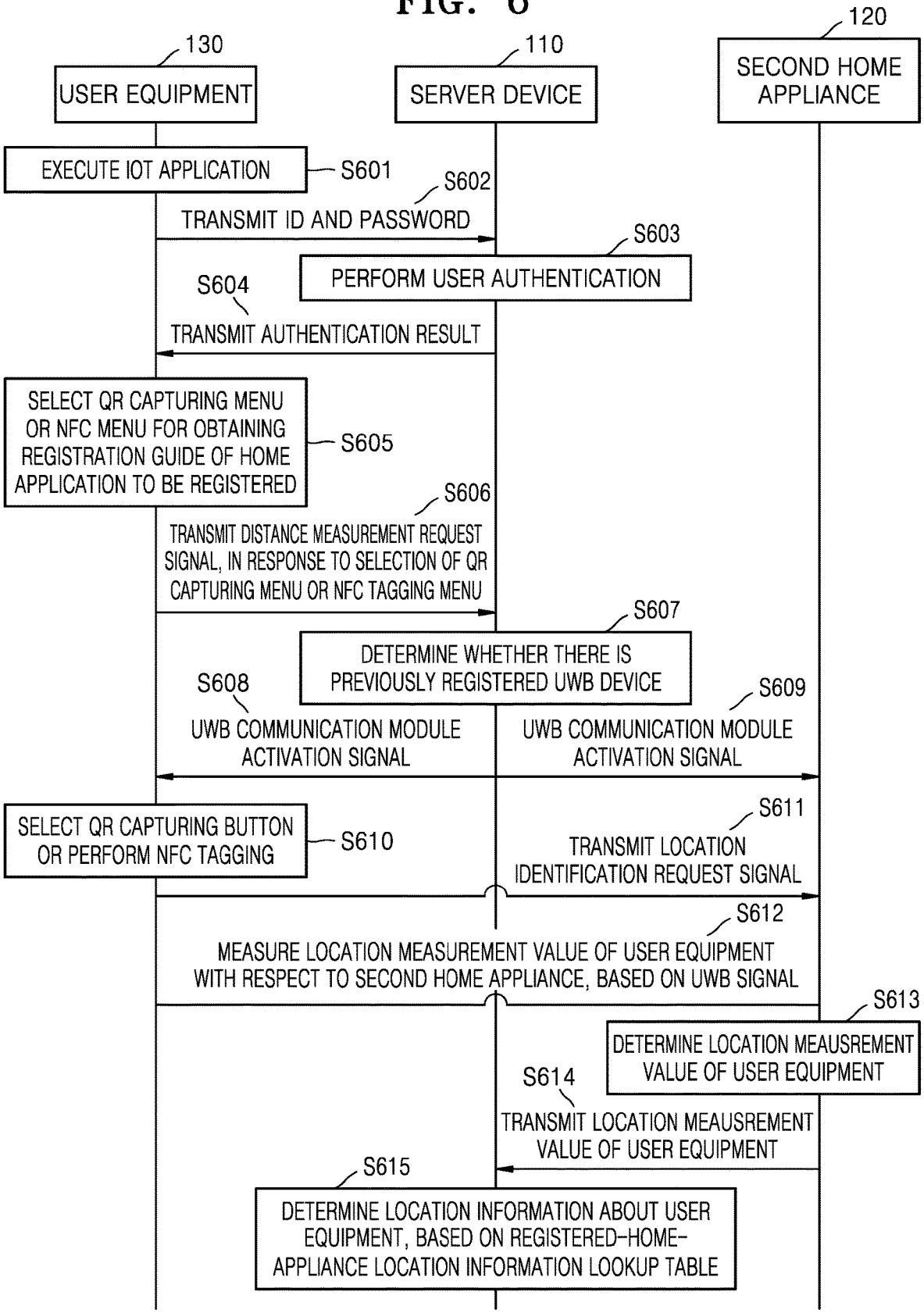
130
USER EQUIPMENT
110
SERVER DEVICE
120
SECOND HOME APPLIANCE
EXECUTE IOT APPLICATION
S601
S602
TRANSMIT ID AND PASSWORD
S603
PERFORM USER AUTHENTICATION
S604
TRANSMIT AUTHENTICATION RESULT
SELECT QR CAPTURING MENU OR NFC MENU FOR OBTAINING REGISTRATION GUIDE OF HOME APPLICATION TO BE REGISTERED
S605
S606
TRANSMIT DISTANCE MEASUREMENT REQUEST SIGNAL, IN RESPONSE TO SELECTION OF QR CAPTURING MENU OR NFC TAGGING MENU
S607
DETERMINE WHETHER THERE IS PREVIOUSLY REGISTERED UWB DEVICE
S608
UWB COMMUNICATION MODULE ACTIVATION SIGNAL
S609
UWB COMMUNICATION MODULE ACTIVATION SIGNAL
SELECT QR CAPTURING BUTTON OR PERFORM NFC TAGGING
S610
S611
TRANSMIT LOCATION IDENTIFICATION REQUEST SIGNAL
S612
MEASURE LOCATION MEASUREMENT VALUE OF USER EQUIPMENT WITH RESPECT TO SECOND HOME APPLIANCE, BASED ON UWB SIGNAL
S613
DETERMINE LOCATION MEAUSREMENT VALUE OF USER EQUIPMENT
S614
TRANSMIT LOCATION MEAUSREMENT VALUE OF USER EQUIPMENT
S615
DETERMINE LOCATION INFORMATION ABOUT USER EQUIPMENT, BASED ON REGISTERED-HOME-APPLIANCE LOCATION INFORMATION LOOKUP TABLE

FIG. 7

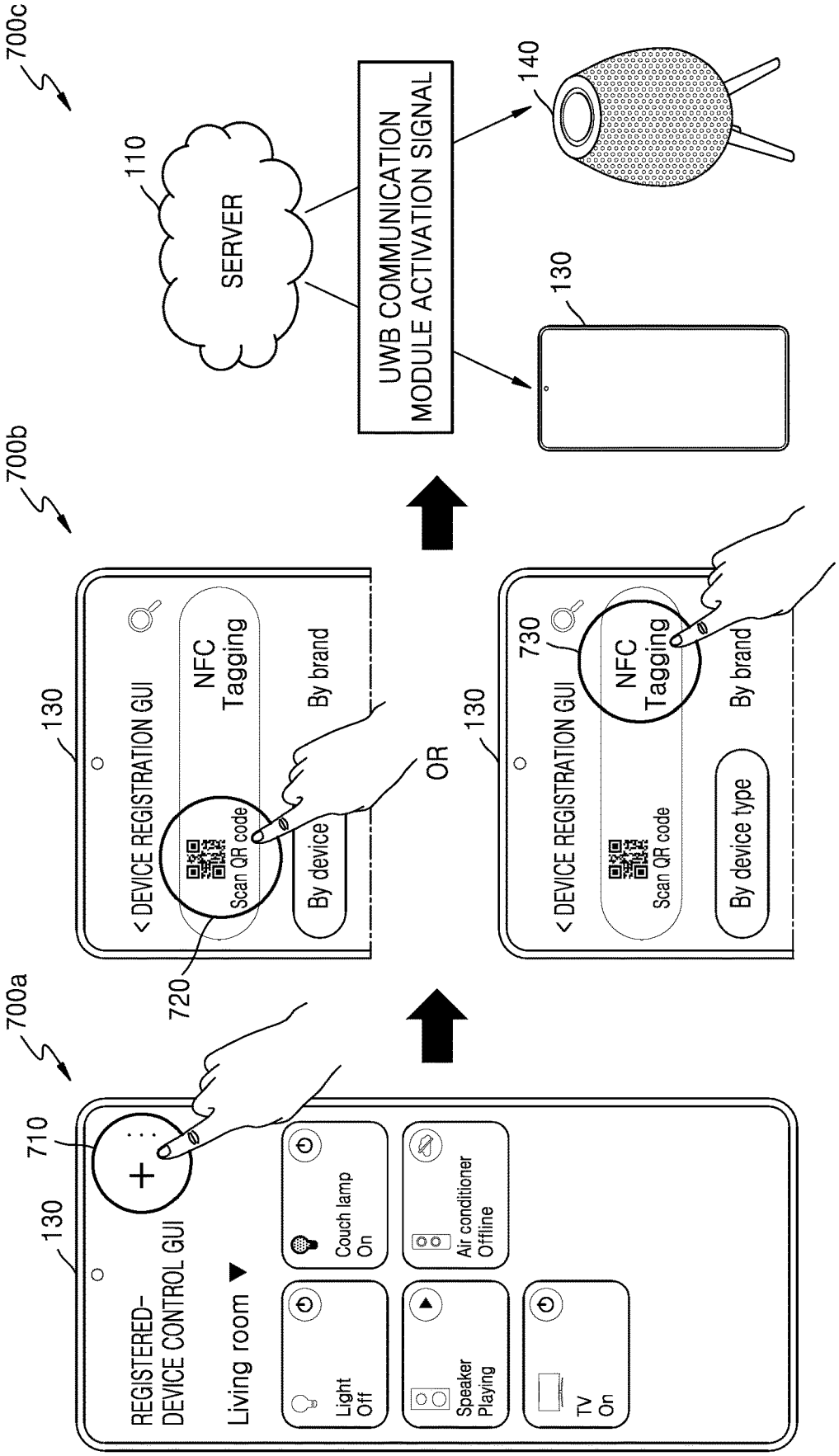
700a
700b
700c
130
REGISTERED-DEVICE CONTROL GUI
Living room
Light Off
Couch lamp On
Speaker Playing
Air conditioner Offline
TV On
710
720
< DEVICE REGISTRATION GUI
Scan QR code
NFC Tagging
By device
By brand
OR
730
By device type
110
SERVER
UWB COMMUNICATION MODULE ACTIVATION SIGNAL
140

FIG. 8

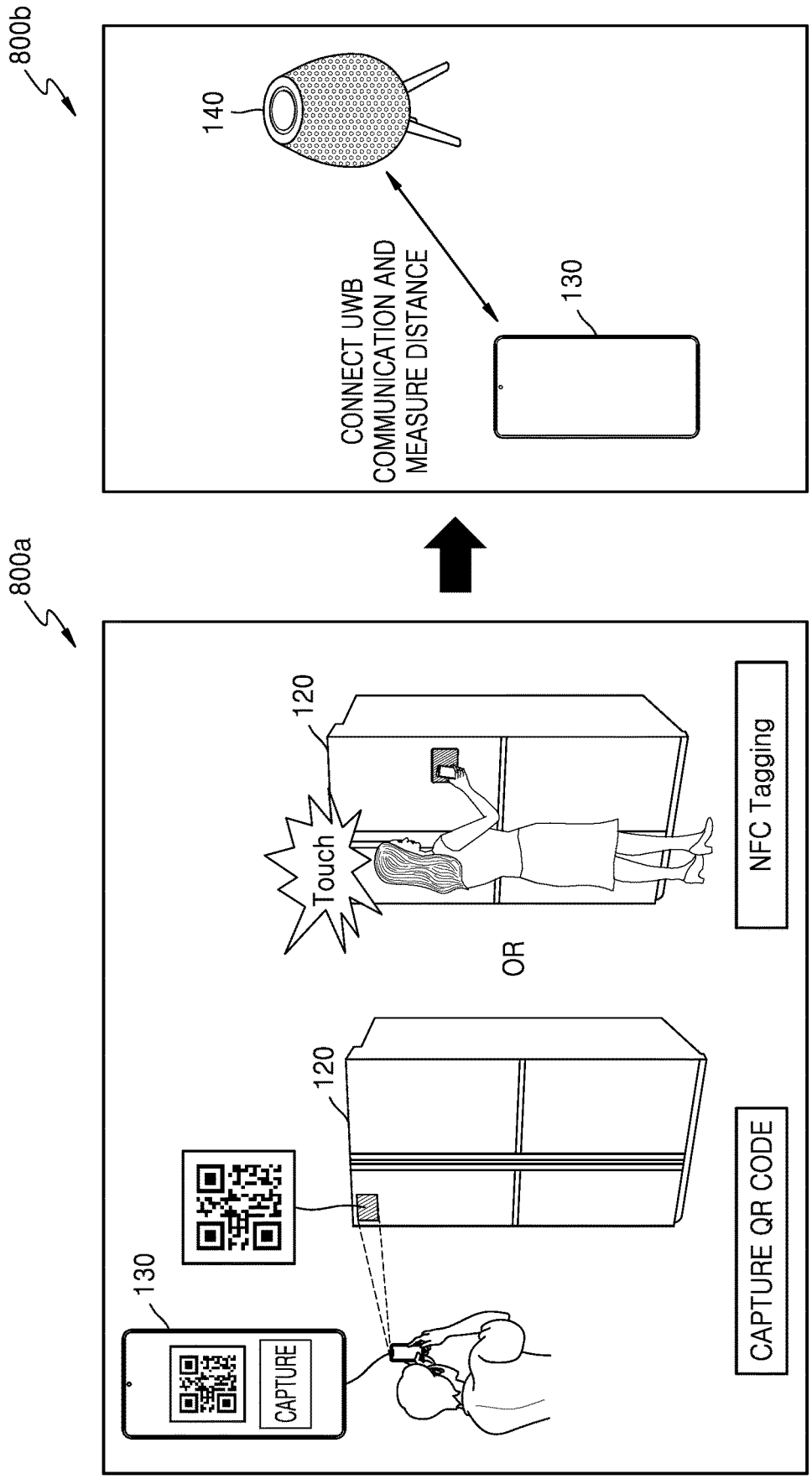
800b
140
CONNECT UWB
COMMUNICATION AND
MEASURE DISTANCE
130
800a
120
Touch
NFC Tagging
OR
120
130
CAPTURE
CAPTURE QR CODE

FIG. 9

900b

Parameter	Size(bits)	Note
ToF result	0/32	ToF result
AoA azimuth result	0/16	AoA azimuth result
AoA elevation result	0/16	AoA elevation result

900c

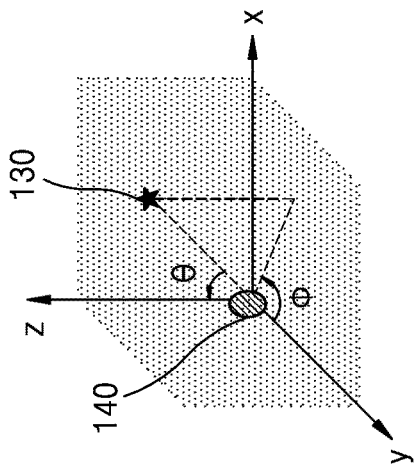

900a

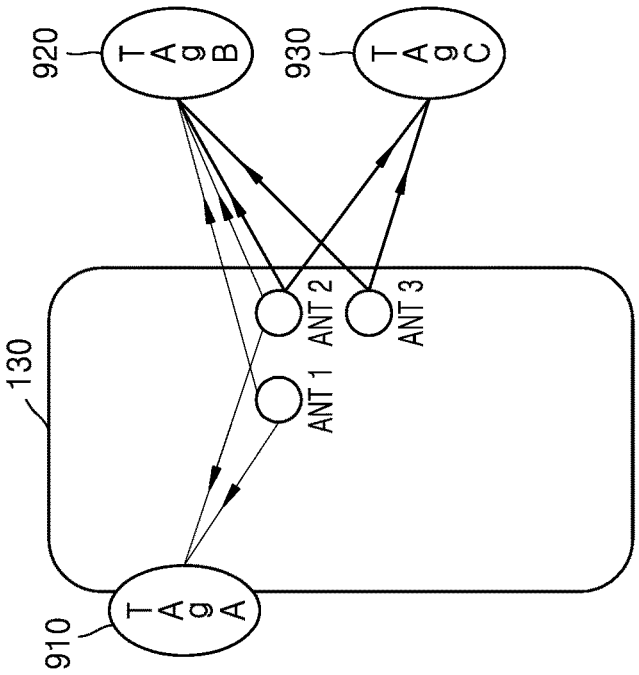

FIG. 10

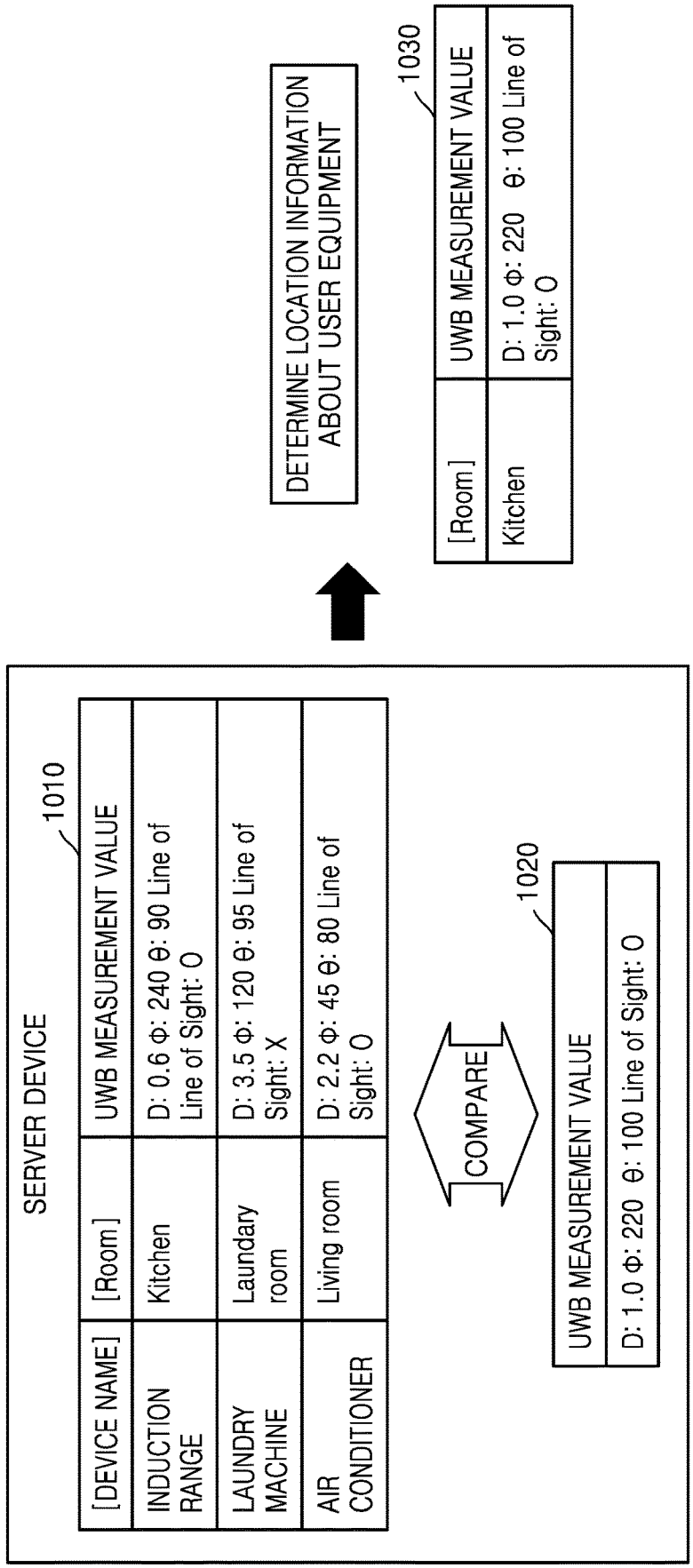
SERVER DEVICE
1010
[DEVICE NAME]
[Room]
UWB MEASUREMENT VALUE
INDUCTION RANGE
Kitchen
D: 0.6 Φ: 240 θ: 90 Line of Line of Sight: O
LAUNDRY MACHINE
Laundary room
D: 3.5 Φ: 120 θ: 95 Line of Sight: X
AIR CONDITIONER
Living room
D: 2.2 Φ: 45 θ: 80 Line of Sight: O
COMPARE
1020
UWB MEASUREMENT VALUE
D: 1.0 Φ: 220 θ: 100 Line of Sight: O
DETERMINE LOCATION INFORMATION ABOUT USER EQUIPMENT
1030
[Room]
UWB MEASUREMENT VALUE
Kitchen
D: 1.0 Φ: 220 θ: 100 Line of Sight: O

FIG. 11

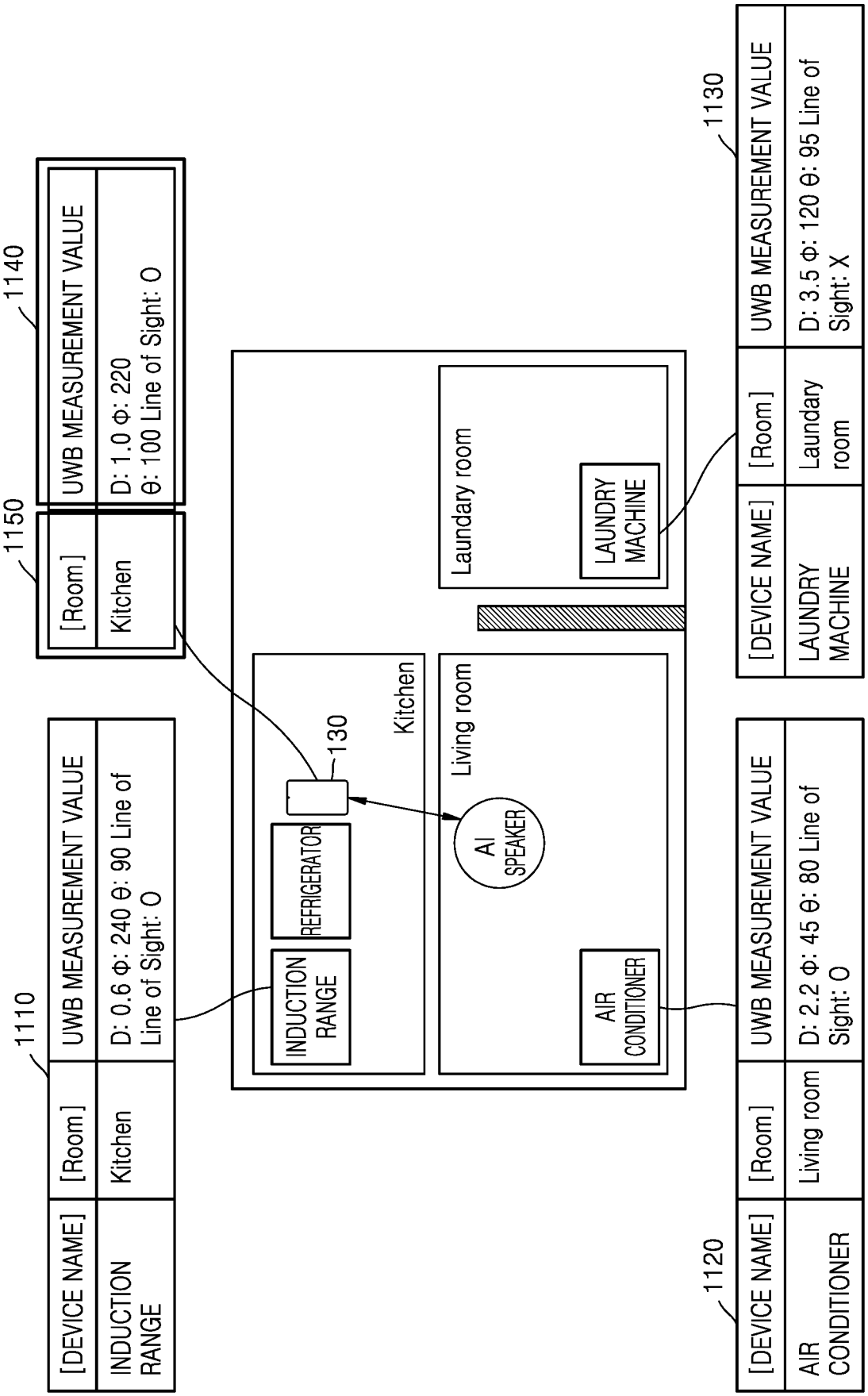
1110
[DEVICE NAME]
INDUCTION RANGE
[Room]
Kitchen
UWB MEASUREMENT VALUE
D: 0.6 Φ: 240 θ: 90 Line of Line of Sight: O
1150
[Room]
Kitchen
1140
UWB MEASUREMENT VALUE
D: 1.0 Φ: 220 θ: 100 Line of Sight: O
INDUCTION RANGE
REFRIGERATOR
130
Kitchen
AI SPEAKER
Living room
AIR CONDITIONER
Laundary room
LAUNDRY MACHINE
1120
[DEVICE NAME]
AIR CONDITIONER
[Room]
Living room
UWB MEASUREMENT VALUE
D: 2.2 Φ: 45 θ: 80 Line of Sight: O
1130
[DEVICE NAME]
LAUNDRY MACHINE
[Room]
Laundary room
UWB MEASUREMENT VALUE
D: 3.5 Φ: 120 θ: 95 Line of Sight: X

FIG. 12

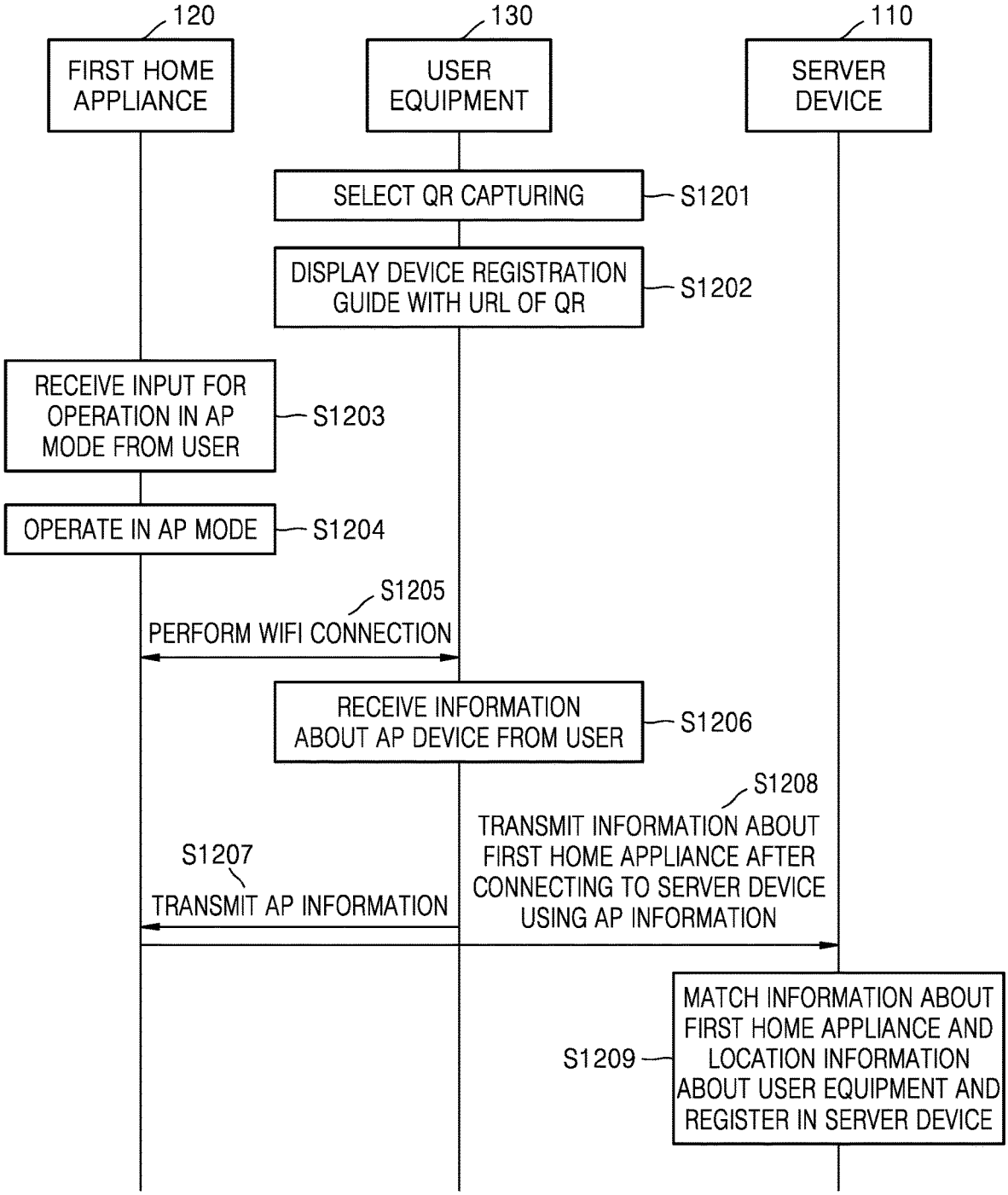
120
FIRST HOME APPLIANCE
130
USER EQUIPMENT
110
SERVER DEVICE
SELECT QR CAPTURING
S1201
DISPLAY DEVICE REGISTRATION GUIDE WITH URL OF QR
S1202
RECEIVE INPUT FOR OPERATION IN AP MODE FROM USER
S1203
OPERATE IN AP MODE
S1204
S1205
PERFORM WIFI CONNECTION
RECEIVE INFORMATION ABOUT AP DEVICE FROM USER
S1206
S1208
TRANSMIT INFORMATION ABOUT FIRST HOME APPLIANCE AFTER CONNECTING TO SERVER DEVICE USING AP INFORMATION
S1207
TRANSMIT AP INFORMATION
MATCH INFORMATION ABOUT FIRST HOME APPLIANCE AND LOCATION INFORMATION ABOUT USER EQUIPMENT AND REGISTER IN SERVER DEVICE
S1209

FIG. 13

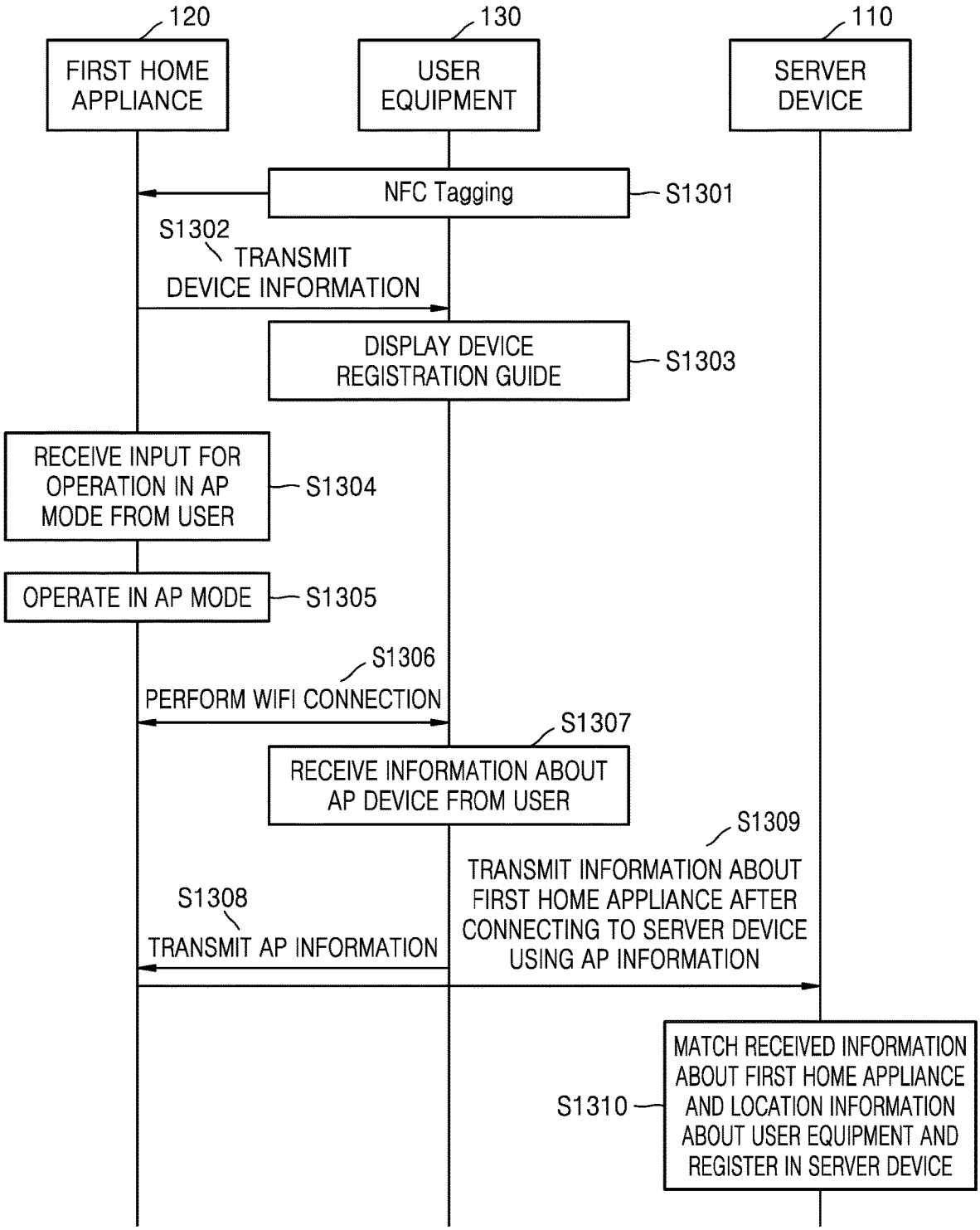
120
FIRST HOME APPLIANCE
130
USER EQUIPMENT
110
SERVER DEVICE
NFC Tagging
S1301
S1302
TRANSMIT DEVICE INFORMATION
DISPLAY DEVICE REGISTRATION GUIDE
S1303
RECEIVE INPUT FOR OPERATION IN AP MODE FROM USER
S1304
OPERATE IN AP MODE
S1305
S1306
PERFORM WIFI CONNECTION
S1307
RECEIVE INFORMATION ABOUT AP DEVICE FROM USER
S1309
TRANSMIT INFORMATION ABOUT FIRST HOME APPLIANCE AFTER CONNECTING TO SERVER DEVICE USING AP INFORMATION
S1308
TRANSMIT AP INFORMATION
MATCH RECEIVED INFORMATION ABOUT FIRST HOME APPLIANCE AND LOCATION INFORMATION ABOUT USER EQUIPMENT AND REGISTER IN SERVER DEVICE
S1310

FIG. 14A

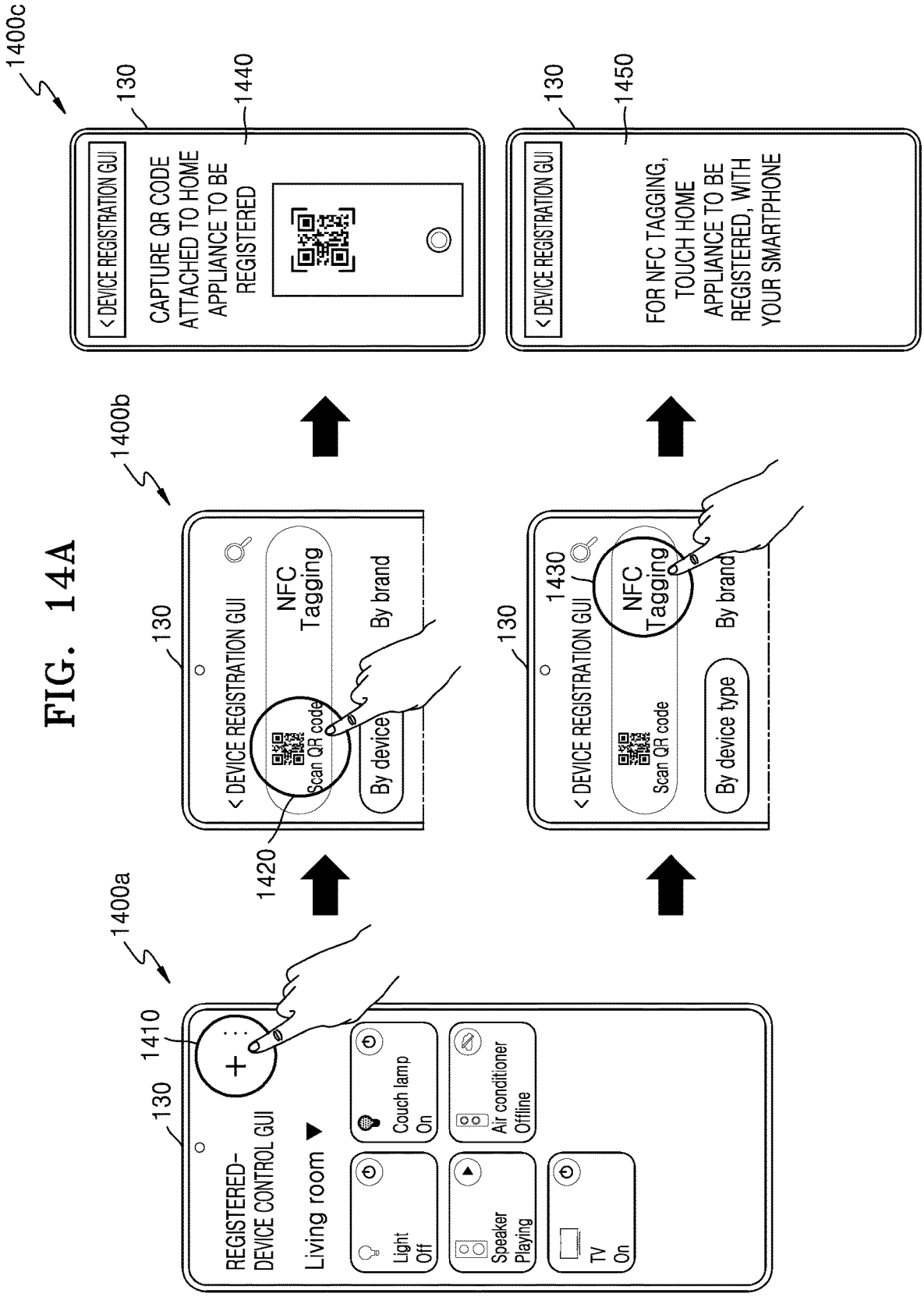
1400a
130
1410
REGISTERED-DEVICE CONTROL GUI
Living room
Light Off
Couch lamp On
Speaker Playing
Air conditioner Offline
TV On
1400b
130
< DEVICE REGISTRATION GUI
Scan QR code
NFC Tagging
By device
By brand
1420
130
< DEVICE REGISTRATION GUI
Scan QR code
NFC Tagging
By device type
By brand
1430
1400c
130
< DEVICE REGISTRATION GUI
CAPTURE QR CODE ATTACHED TO HOME APPLIANCE TO BE REGISTERED
1440
130
< DEVICE REGISTRATION GUI
FOR NFC TAGGING, TOUCH HOME APPLIANCE TO BE REGISTERED, WITH YOUR SMARTPHONE
1450

FIG. 14B

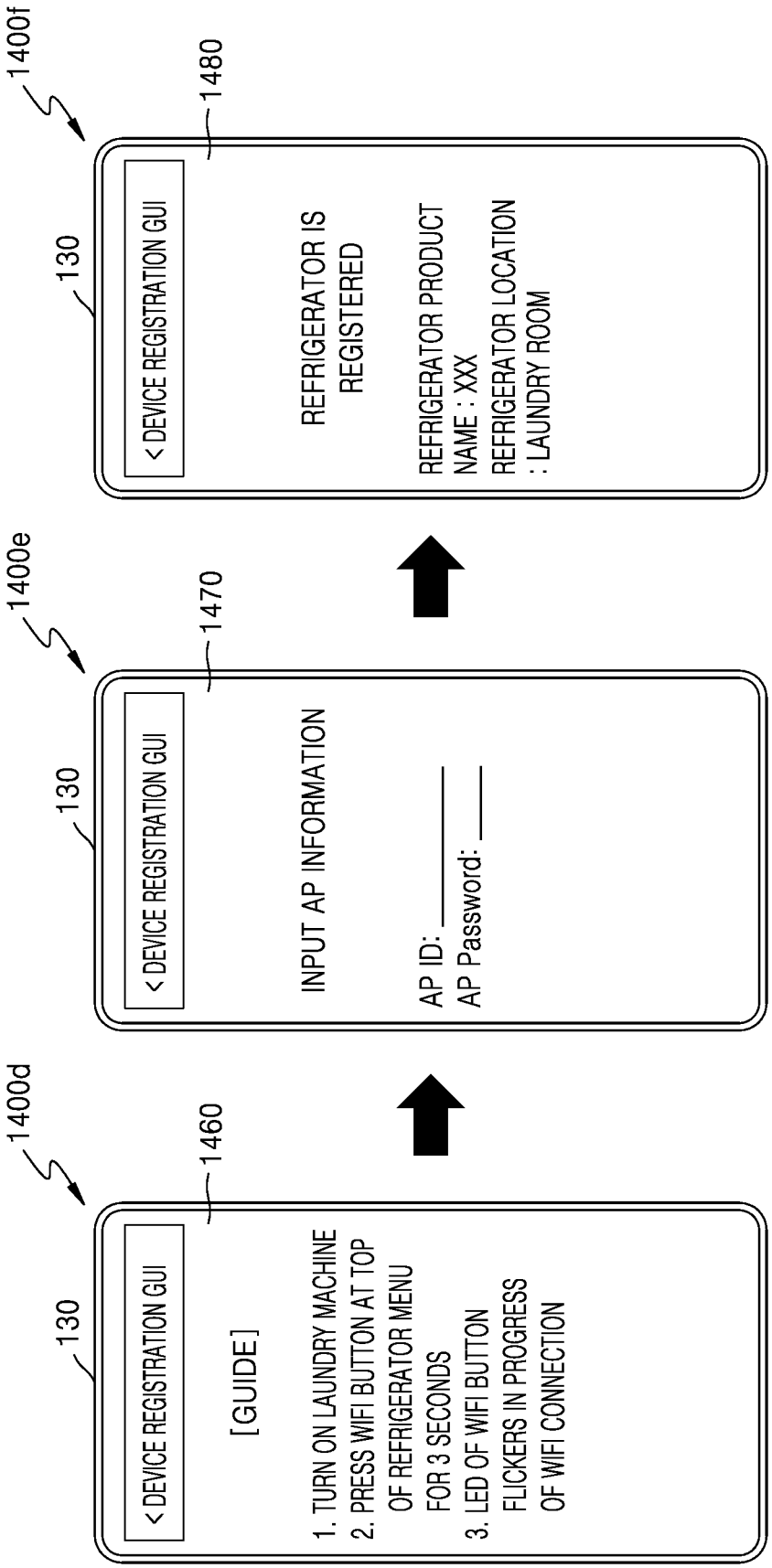
1400d
130
< DEVICE REGISTRATION GUI
1460
[GUIDE]
1. TURN ON LAUNDRY MACHINE
2. PRESS WIFI BUTTON AT TOP OF REFRIGERATOR MENU FOR 3 SECONDS
3. LED OF WIFI BUTTON FLICKERS IN PROGRESS OF WIFI CONNECTION
1400e
130
< DEVICE REGISTRATION GUI
1470
INPUT AP INFORMATION
AP ID: _____
AP Password: _____
1400f
130
< DEVICE REGISTRATION GUI
1480
REFRIGERATOR IS REGISTERED
REFRIGERATOR PRODUCT NAME : XXX
REFRIGERATOR LOCATION : LAUNDRY ROOM

FIG. 15

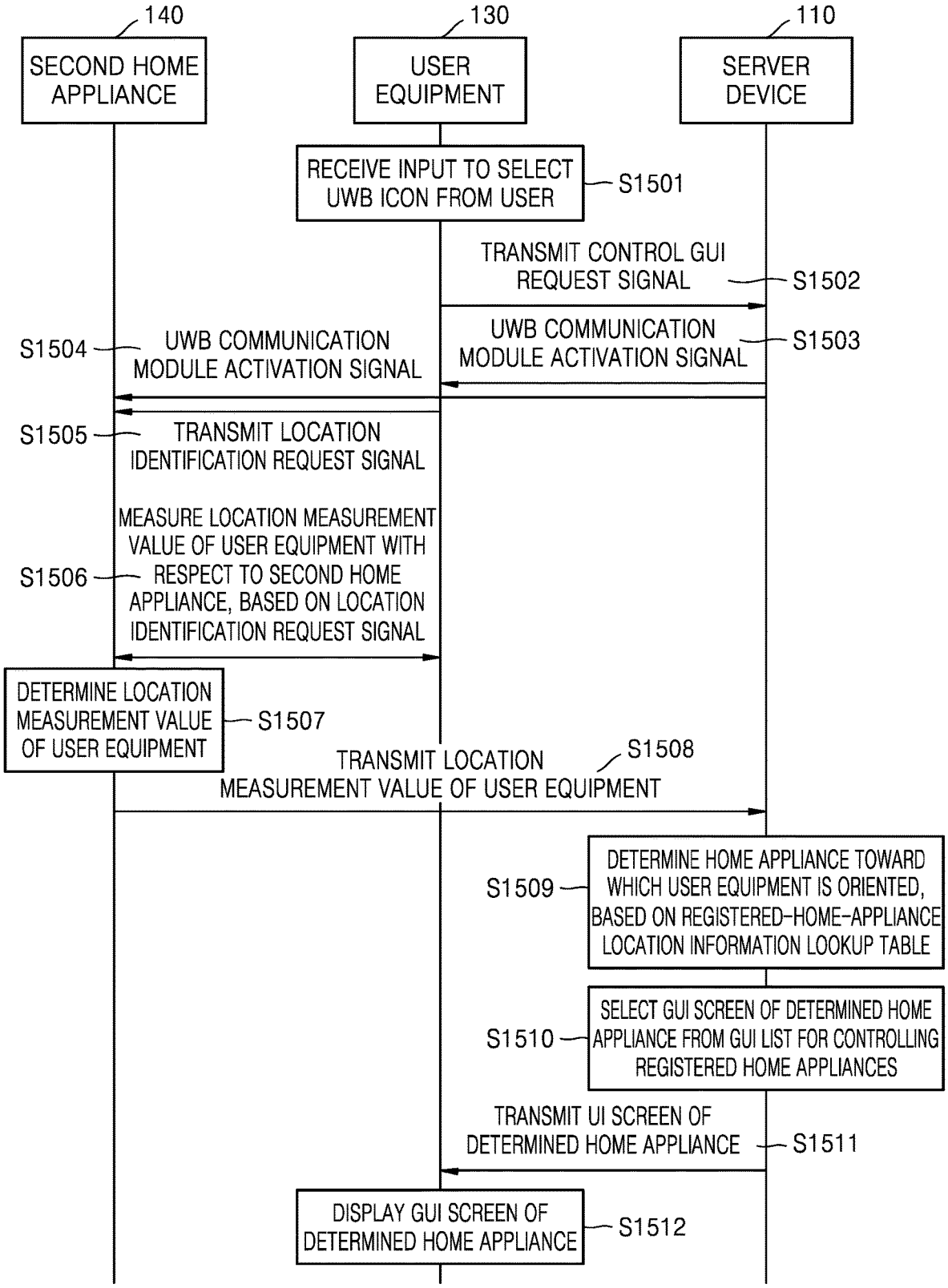
140
SECOND HOME APPLIANCE
130
USER EQUIPMENT
110
SERVER DEVICE
RECEIVE INPUT TO SELECT UWB ICON FROM USER
S1501
TRANSMIT CONTROL GUI REQUEST SIGNAL
S1502
UWB COMMUNICATION MODULE ACTIVATION SIGNAL
S1503
S1504
UWB COMMUNICATION MODULE ACTIVATION SIGNAL
S1505
TRANSMIT LOCATION IDENTIFICATION REQUEST SIGNAL
MEASURE LOCATION MEASUREMENT VALUE OF USER EQUIPMENT WITH RESPECT TO SECOND HOME APPLIANCE, BASED ON LOCATION IDENTIFICATION REQUEST SIGNAL
S1506
DETERMINE LOCATION MEASUREMENT VALUE OF USER EQUIPMENT
S1507
TRANSMIT LOCATION MEASUREMENT VALUE OF USER EQUIPMENT
S1508
DETERMINE HOME APPLIANCE TOWARD WHICH USER EQUIPMENT IS ORIENTED, BASED ON REGISTERED-HOME-APPLIANCE LOCATION INFORMATION LOOKUP TABLE
S1509
SELECT GUI SCREEN OF DETERMINED HOME APPLIANCE FROM GUI LIST FOR CONTROLLING REGISTERED HOME APPLIANCES
S1510
TRANSMIT UI SCREEN OF DETERMINED HOME APPLIANCE
S1511
DISPLAY GUI SCREEN OF DETERMINED HOME APPLIANCE
S1512

FIG. 16

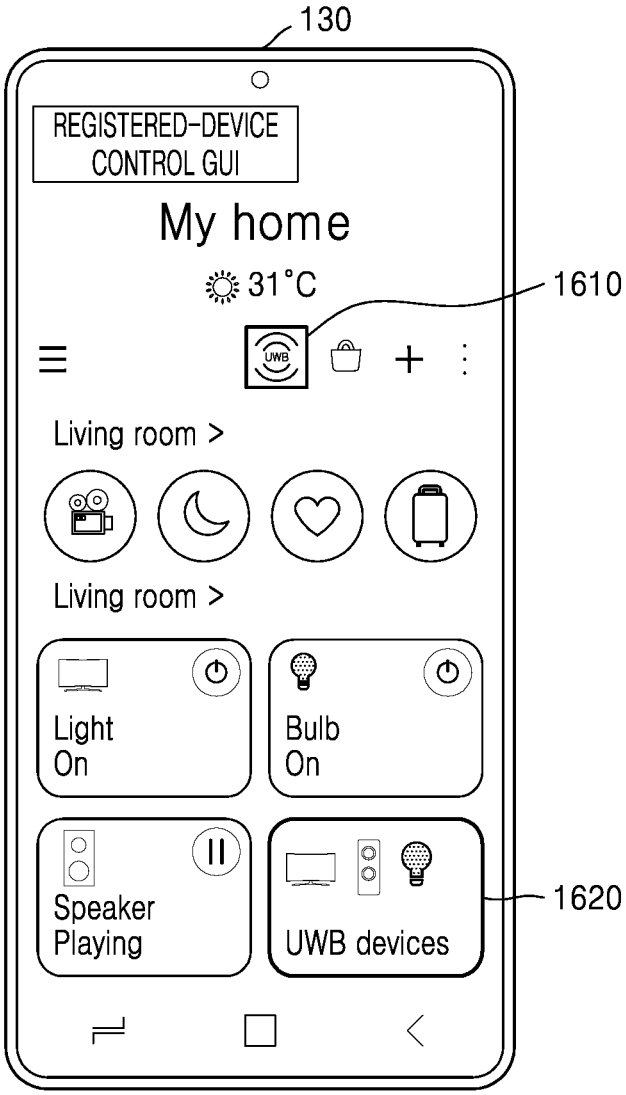
130
REGISTERED-DEVICE CONTROL GUI
My home
31°C
1610
UWB
Living room >
Living room >
Light
On
Bulb
On
Speaker
Playing
UWB devices
1620

FIG. 17

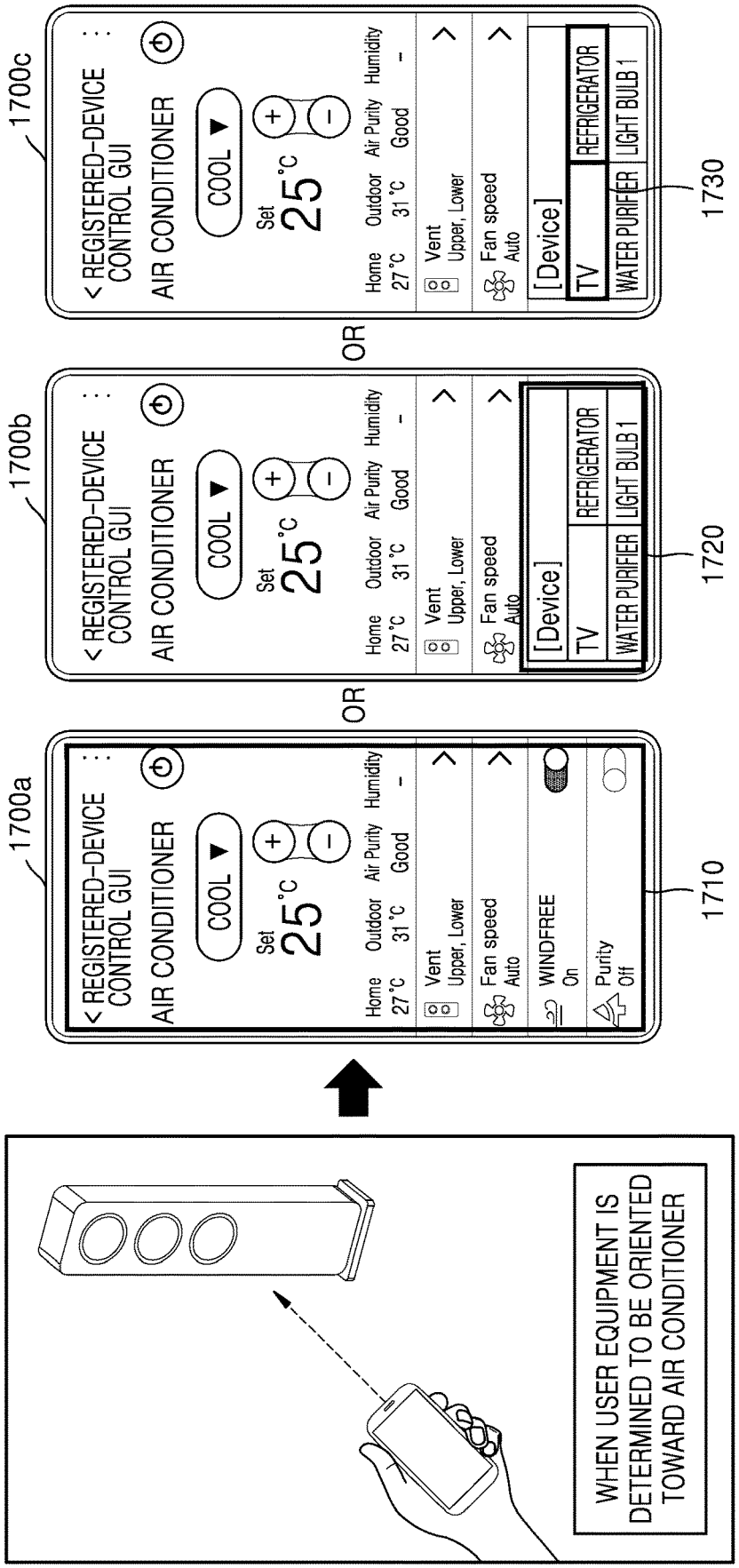
WHEN USER EQUIPMENT IS DETERMINED TO BE ORIENTED TOWARD AIR CONDITIONER
1700a
< REGISTERED-DEVICE CONTROL GUI
AIR CONDITIONER
COOL
Set 25 °C
Home 27 °C
Outdoor 31 °C
Air Purity Good
Humidity -
Vent Upper, Lower
Fan speed Auto
WINDFREE On
Purity Off
1710
OR
1700b
< REGISTERED-DEVICE CONTROL GUI
AIR CONDITIONER
COOL
Set 25 °C
Home 27 °C
Outdoor 31 °C
Air Purity Good
Humidity -
Vent Upper, Lower
Fan speed Auto
[Device]
TV
REFRIGERATOR
WATER PURIFIER
LIGHT BULB1
1720
OR
1700c
< REGISTERED-DEVICE CONTROL GUI
AIR CONDITIONER
COOL
Set 25 °C
Home 27 °C
Outdoor 31 °C
Air Purity Good
Humidity -
Vent Upper, Lower
Fan speed Auto
[Device]
TV
REFRIGERATOR
WATER PURIFIER
LIGHT BULB1
1730

FIG. 18

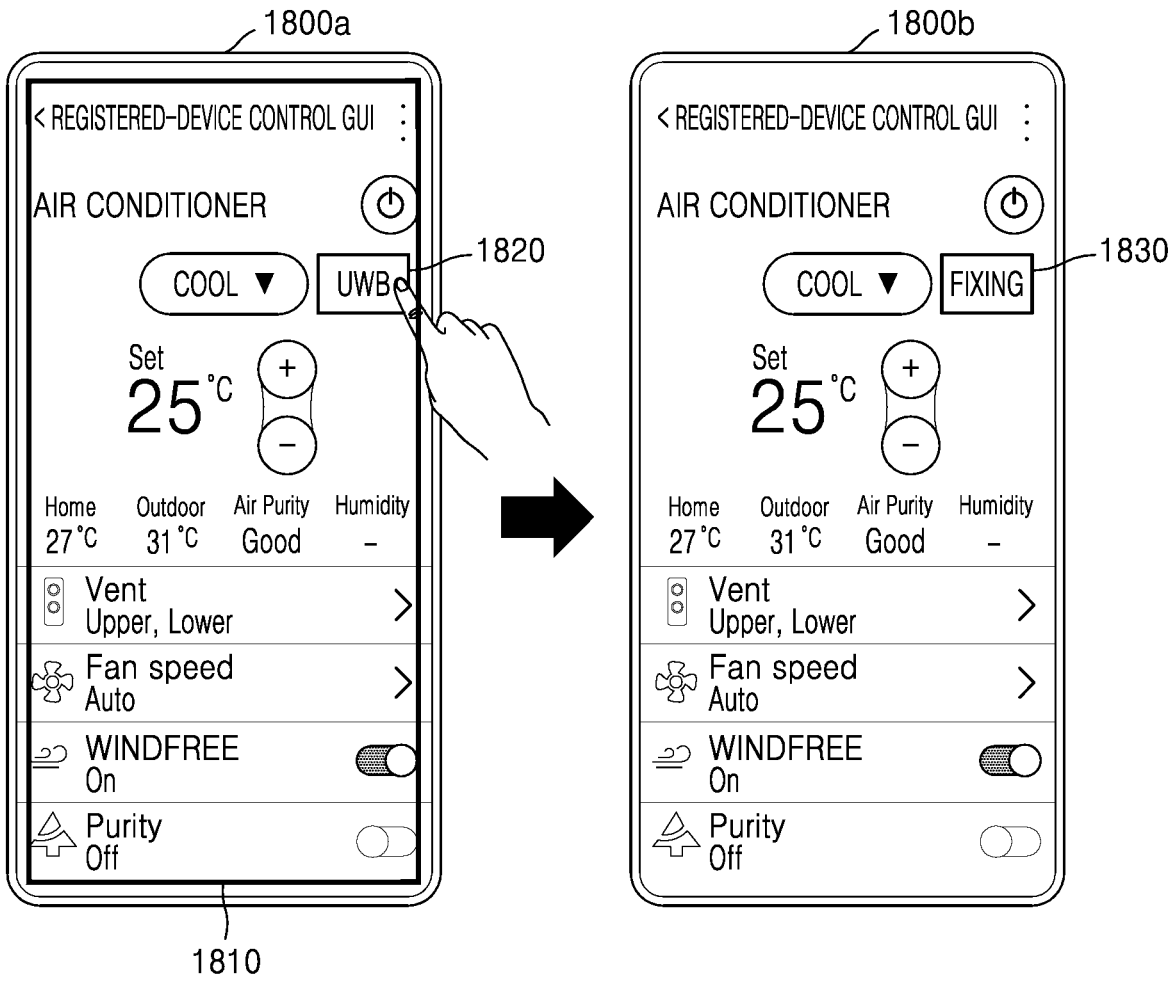
1800a
< REGISTERED-DEVICE CONTROL GUI
AIR CONDITIONER
COOL ▼
UWB
1820
Set
25 °C
Home
27 °C
Outdoor
31 °C
Air Purity
Good
Humidity
-
Vent
Upper, Lower
Fan speed
Auto
WINDFREE
On
Purity
Off
1810
1800b
< REGISTERED-DEVICE CONTROL GUI
AIR CONDITIONER
COOL ▼
FIXING
1830
Set
25 °C
Home
27 °C
Outdoor
31 °C
Air Purity
Good
Humidity
-
Vent
Upper, Lower
Fan speed
Auto
WINDFREE
On
Purity
Off

FIG. 19

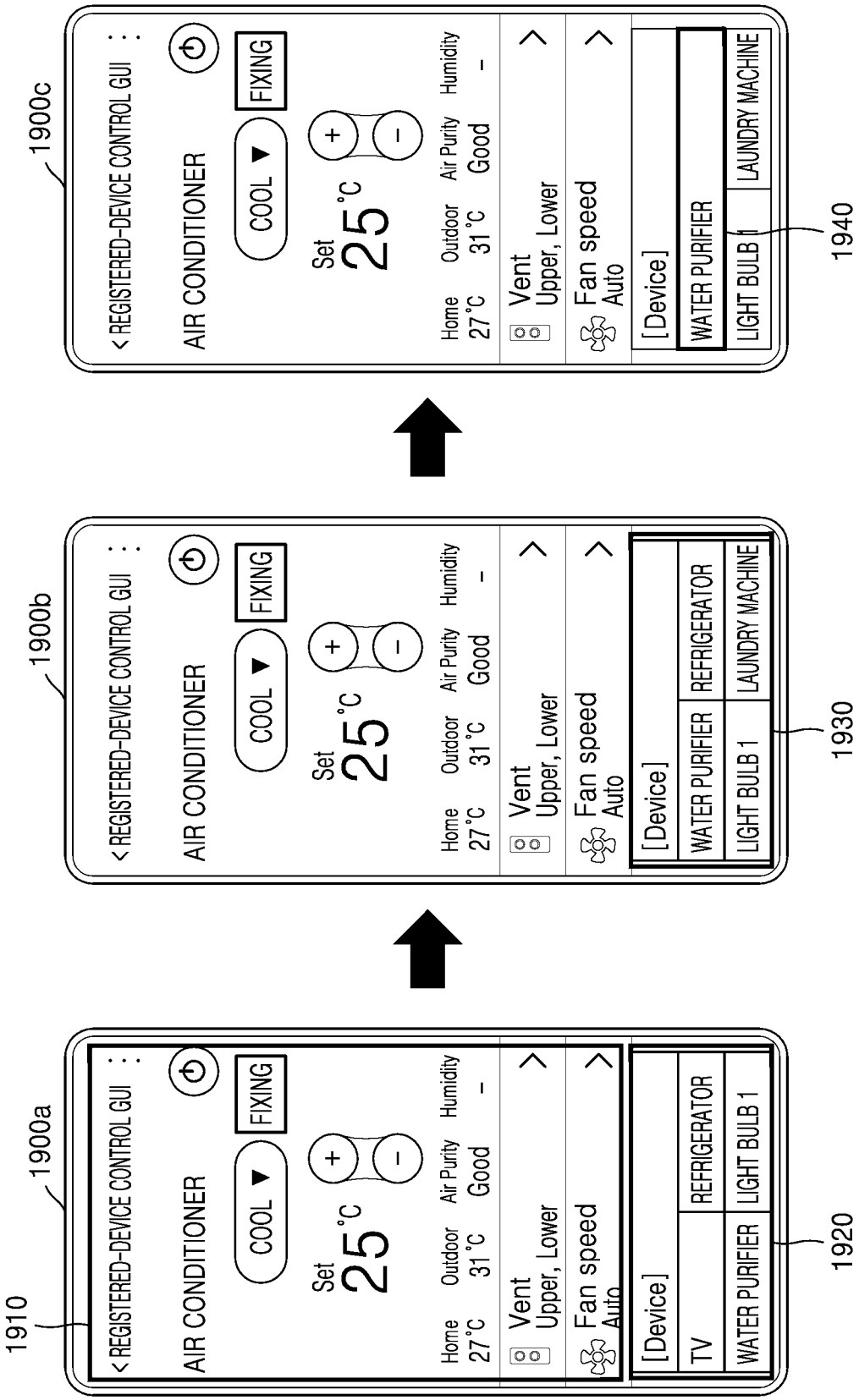
1900a
1910
< REGISTERED-DEVICE CONTROL GUI
AIR CONDITIONER
COOL
FIXING
Set
25 °C
Home 27 °C
Outdoor 31 °C
Air Purity Good
Humidity -
Vent
Upper, Lower
Fan speed
Auto
[Device]
TV
REFRIGERATOR
WATER PURIFIER
LIGHT BULB 1
1920
1900b
< REGISTERED-DEVICE CONTROL GUI
AIR CONDITIONER
COOL
FIXING
Set
25 °C
Home 27 °C
Outdoor 31 °C
Air Purity Good
Humidity -
Vent
Upper, Lower
Fan speed
Auto
[Device]
WATER PURIFIER
REFRIGERATOR
LIGHT BULB 1
LAUNDRY MACHINE
1930
1900c
< REGISTERED-DEVICE CONTROL GUI
AIR CONDITIONER
COOL
FIXING
Set
25 °C
Home 27 °C
Outdoor 31 °C
Air Purity Good
Humidity -
Vent
Upper, Lower
Fan speed
Auto
[Device]
WATER PURIFIER
LIGHT BULB 1
LAUNDRY MACHINE
1940

FIG. 20

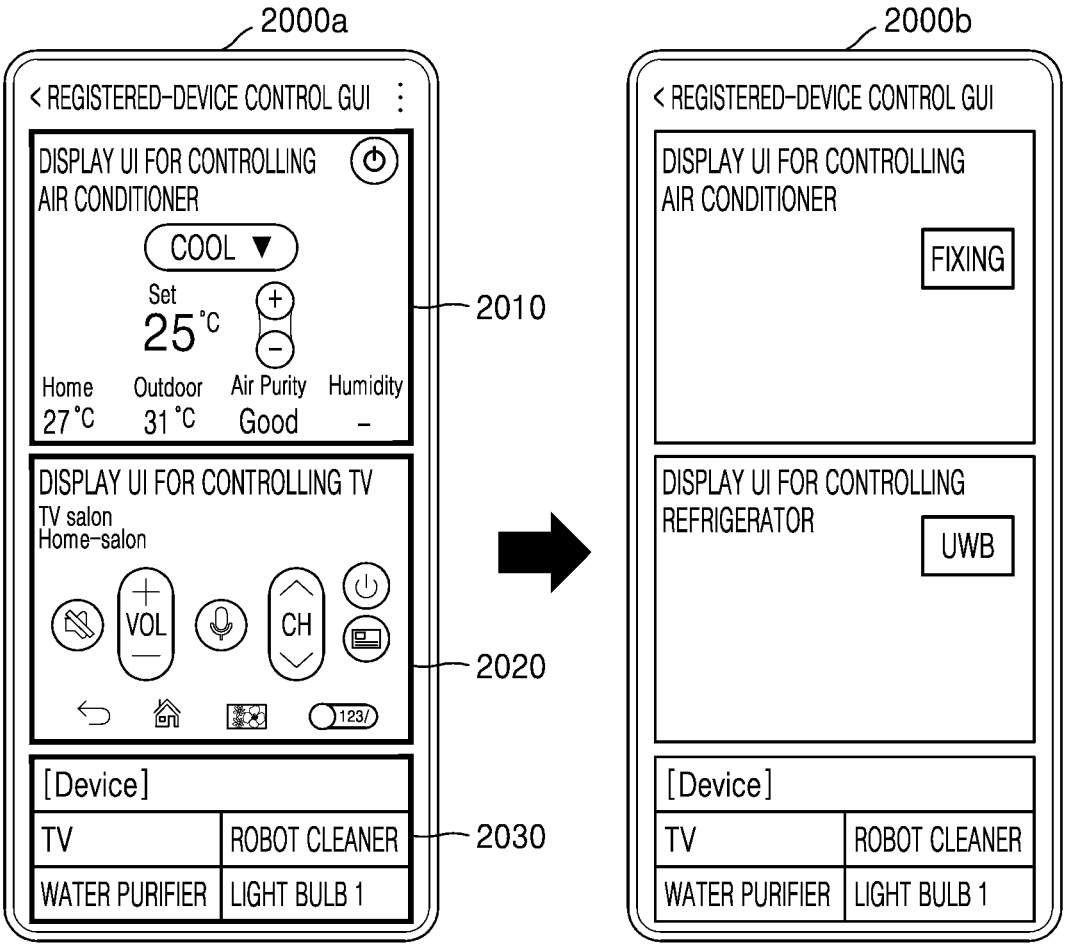
2000a
< REGISTERED-DEVICE CONTROL GUI
DISPLAY UI FOR CONTROLLING AIR CONDITIONER
COOL
Set
25 °C
Home
27 °C
Outdoor
31 °C
Air Purity
Good
Humidity
-
2010
DISPLAY UI FOR CONTROLLING TV
TV salon
Home-salon
VOL
CH
123/
2020
[Device]
TV
ROBOT CLEANER
WATER PURIFIER
LIGHT BULB 1
2030
2000b
< REGISTERED-DEVICE CONTROL GUI
DISPLAY UI FOR CONTROLLING AIR CONDITIONER
FIXING
DISPLAY UI FOR CONTROLLING REFRIGERATOR
UWB
[Device]
TV
ROBOT CLEANER
WATER PURIFIER
LIGHT BULB 1

FIG. 21

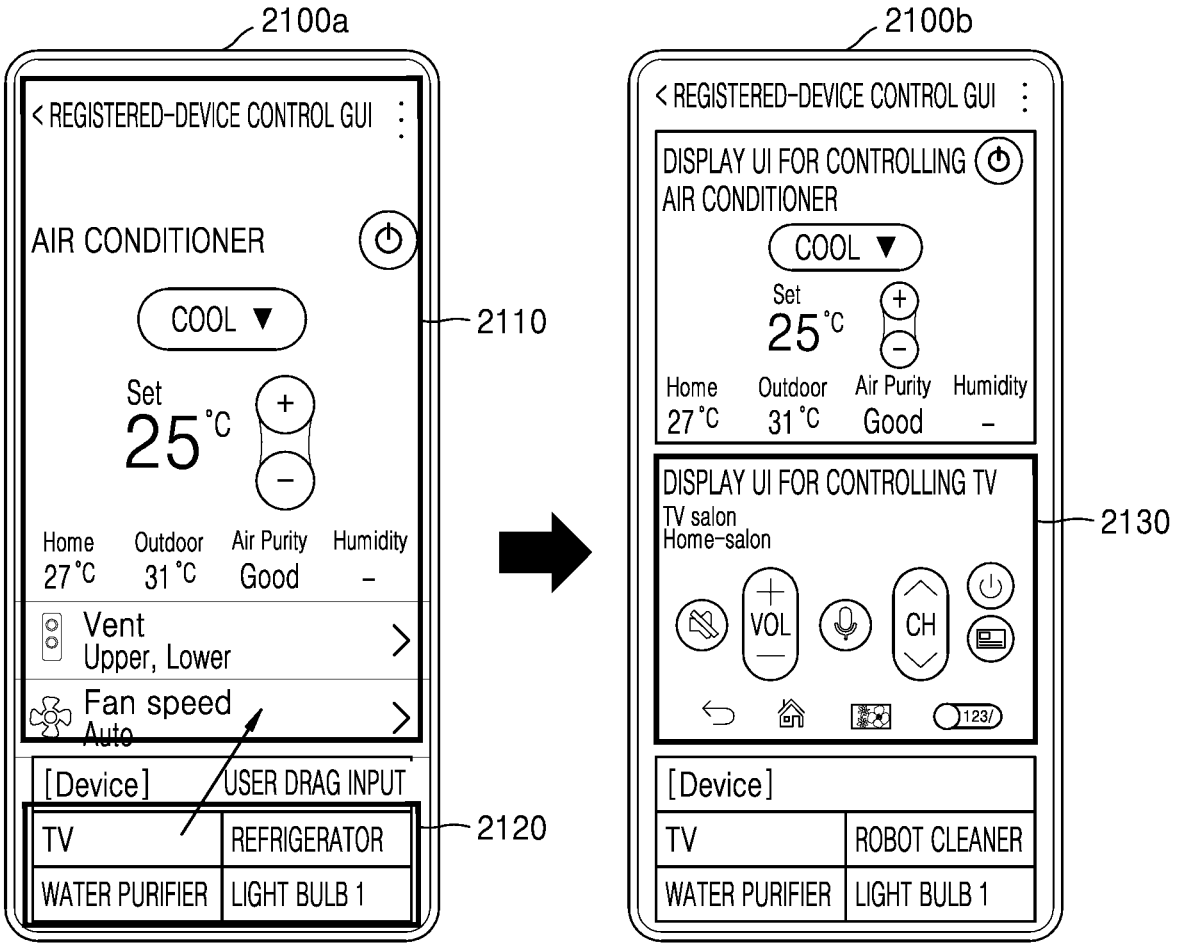
2100a
< REGISTERED-DEVICE CONTROL GUI
AIR CONDITIONER
COOL ▼
Set
25 °C
Home
27 °C
Outdoor
31 °C
Air Purity
Good
Humidity
-
Vent
Upper, Lower
Fan speed
Auto
[Device]
USER DRAG INPUT
TV
REFRIGERATOR
WATER PURIFIER
LIGHT BULB 1
2110
2120
2100b
< REGISTERED-DEVICE CONTROL GUI
DISPLAY UI FOR CONTROLLING AIR CONDITIONER
COOL ▼
Set
25 °C
Home
27 °C
Outdoor
31 °C
Air Purity
Good
Humidity
-
DISPLAY UI FOR CONTROLLING TV
TV salon
Home-salon
VOL
CH
123/
[Device]
TV
ROBOT CLEANER
WATER PURIFIER
LIGHT BULB 1
2130

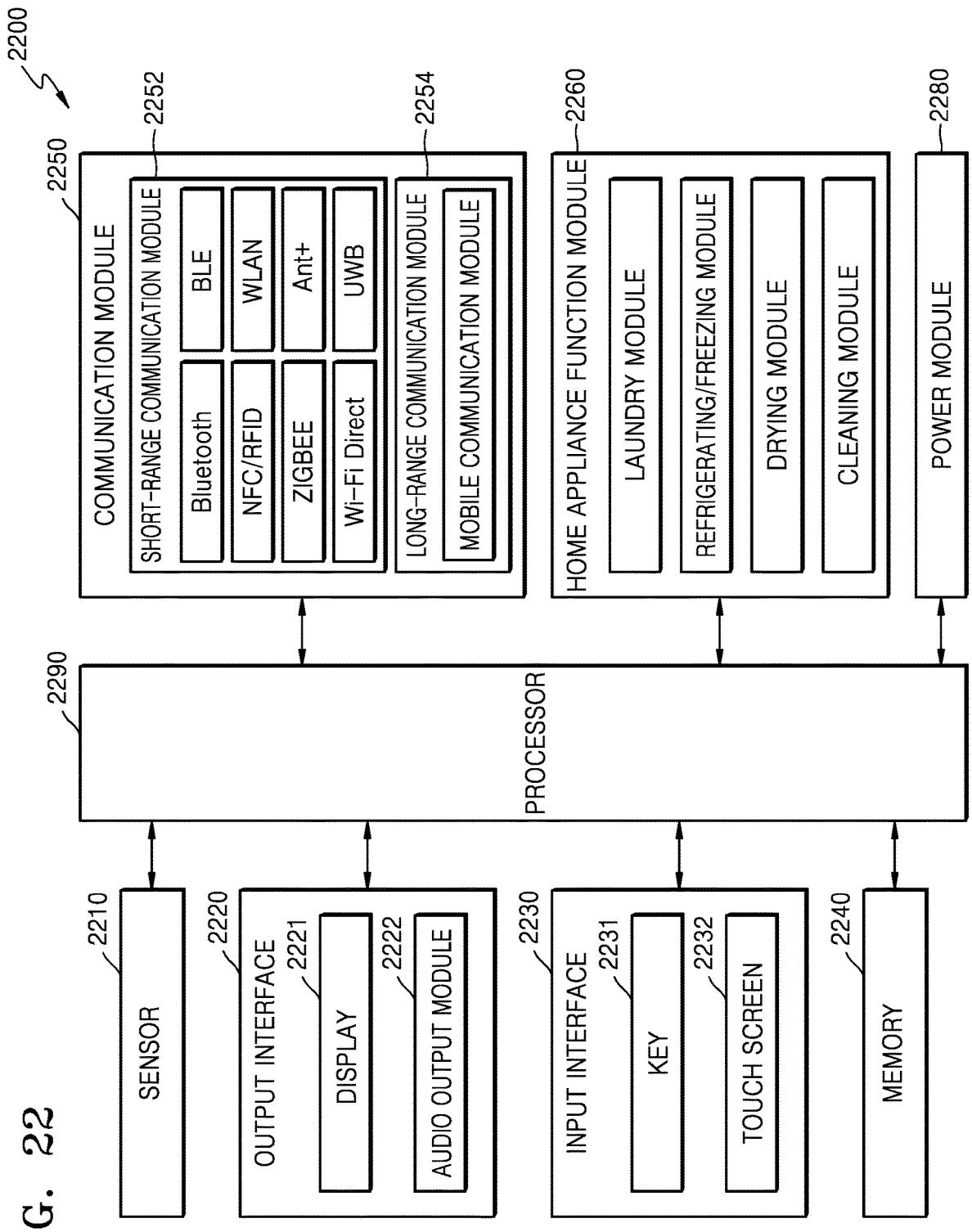
2200
2250
COMMUNICATION MODULE
2252
SHORT-RANGE COMMUNICATION MODULE
Bluetooth
BLE
NFC/RFID
WLAN
ZIGBEE
Ant+
Wi-Fi Direct
UWB
2254
LONG-RANGE COMMUNICATION MODULE
MOBILE COMMUNICATION MODULE
2260
HOME APPLIANCE FUNCTION MODULE
LAUNDRY MODULE
REFRIGERATING/FREEZING MODULE
DRYING MODULE
CLEANING MODULE
2280
POWER MODULE
2290
PROCESSOR
2210
SENSOR
2220
OUTPUT INTERFACE
2221
DISPLAY
2222
AUDIO OUTPUT MODULE
2230
INPUT INTERFACE
2231
KEY
2232
TOUCH SCREEN
2240
MEMORY

FIG. 22

FIG. 23

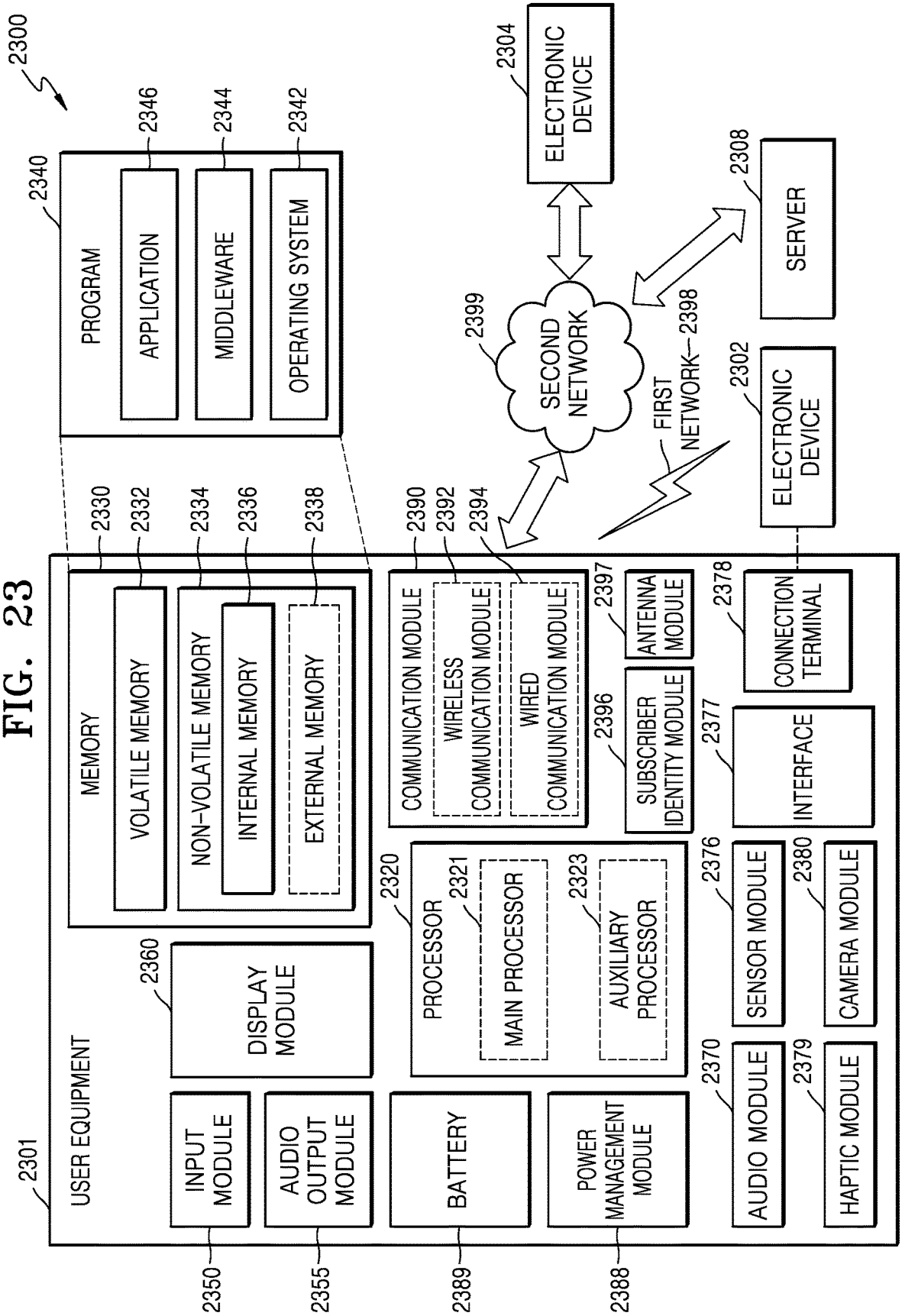
2300
2340
PROGRAM
2346
APPLICATION
2344
MIDDLEWARE
2342
OPERATING SYSTEM
2304
ELECTRONIC DEVICE
2308
SERVER
2399
SECOND NETWORK
2398
FIRST NETWORK
2302
ELECTRONIC DEVICE
2301
USER EQUIPMENT
2330
MEMORY
2332
VOLATILE MEMORY
2334
NON-VOLATILE MEMORY
2336
INTERNAL MEMORY
2338
EXTERNAL MEMORY
2390
COMMUNICATION MODULE
2392
WIRELESS COMMUNICATION MODULE
2394
WIRED COMMUNICATION MODULE
2397
ANTENNA MODULE
2396
SUBSCRIBER IDENTITY MODULE
2378
CONNECTION TERMINAL
2377
INTERFACE
2360
DISPLAY MODULE
2320
PROCESSOR
2321
MAIN PROCESSOR
2323
AUXILIARY PROCESSOR
2376
SENSOR MODULE
2380
CAMERA MODULE
2370
AUDIO MODULE
2379
HAPTIC MODULE
INPUT MODULE
AUDIO OUTPUT MODULE
BATTERY
POWER MANAGEMENT MODULE
2350
2355
2389
2388

METHOD AND SYSTEM FOR CONTROLLING HOME APPLIANCE

CROSS-REFERENCE TO RELATED APPLICATION

This application is a bypass continuation application of International Application No. PCT/KR2022/013672, filed Sep. 14, 2022, which claims priority to Korean Patent Application No. 10-2021-0122773, filed on Sep. 14, 2021, in the Korean Intellectual Property Office, the disclosures of which are incorporated by reference herein in their entireties.

BACKGROUND

1. Field

The disclosure relate to a method and system for controlling an in-house home appliance by using location information about a user equipment, which is obtained through a home appliance including an ultra-wideband (UWB) communication module.

2. Description of Related Art

With the widespread use of Internet of Things (IoT) products, people's lives have improved as objects around them are connected to the Internet. However, many types of IoT products do not often include ultra-wideband (UWB) communication modules as smartphones do, and thus, there is a problem in accurately measuring locations of the IoT products without UWB modules. Thus, when such an IoT product is registered in a server, a user input to set a location of the IoT product has to be received from a user, resulting user inconvenience.

SUMMARY

Embodiments of the disclosure provide a server device, a control method of the server device, and a control method of a user equipment to address a difficulty caused by failing to accurately measure a location of a home appliance that does not include a ultra-wideband (UWB) communication module, and to solve a problem in terms of user convenience in a process of connecting a home appliance in a state of a new product before network connection to a network and registering the home appliance in a server.

According to an aspect of the disclosure, a method, performed by a server device, of controlling a home appliance, includes: receiving a distance measurement request signal from a user equipment; transmitting, based on the received distance measurement request signal, an ultra-wideband (UWB) communication module activation signal to the user equipment and a second home appliance that includes a UWB antenna; receiving, from the second home appliance, a location measurement value of the user equipment measured with respect to the second home appliance, the location measurement value being based on a UWB signal between the user equipment and the second home appliance; determining location information about the user equipment, based on the location measurement value of the user equipment; receiving, from a first home appliance that does not include a UWB antenna, information about the first home appliance; and registering the first home appliance in the server device, based on the received information about the first home appliance and the location information about the user equipment.

The method may further include identifying, based on the received distance measurement request signal, the second home appliance as an appliance including the UWB antenna and being registered in the server device.

The distance measurement request signal may be transmitted from the user equipment to the server device based on a selection of a quick response (QR) capturing menu or a near field communication (NFC) tagging menu on a device registration graphical user interface (GUI) displayed on the user equipment to register the first home appliance.

The receiving the location measurement value of the user equipment may include receiving location information about the user equipment measured with respect to the second home appliance based on a location identification request signal, and the location identification request signal may be a UWB signal transmitted from the user equipment to the second home appliance based on selection of a QR capturing button of the user equipment or performing NFC tagging with the user equipment.

The location measurement value may include azimuth information about the user equipment, measured with respect to the second home appliance, elevation information about the user equipment, measured with respect to the second home appliance, and distance information between the second home appliance and the user equipment.

The determining the location information about the user equipment may include determining the location information about the user equipment based on a comparison of information in a location information lookup table stored in the server device with the location measurement value of the user equipment.

The receiving the information about the first home appliance may include receiving, based on access point (AP) information received by the first home appliance from the user equipment, the information about the first home appliance from the first home appliance through a Wireless Fidelity (WiFi) communication channel established between the user equipment and the first home appliance.

The information about the first home appliance may include a product name of the first home appliance, a manufacturing date of the first home appliance, and state information about the first home appliance.

The method may further include: receiving a control graphical user interface (GUI) request signal from the user equipment; based on the received control GUI request signal, transmitting the UWB communication module activation signal to the user equipment and the second home appliance; receiving, from the second home appliance, the location measurement value of the user equipment measured in response to a location identification request signal transmitted from the user equipment; determining a third home appliance toward which the user equipment is oriented, based on the location measurement value of the user equipment; and providing a GUI for controlling the determined third home appliance to the user equipment.

According to an aspect of the disclosure, a server device includes: a communication interface configured to communicate with a user equipment and at least one home appliance; a memory storing one or more instructions; and at least one processor configured to execute the one or more instructions to: receive, via the communication interface, a distance measurement request signal from a user equipment; control the communication interface to transmit, based on the received distance measurement request signal, an ultra-

wideband (UWB) communication module activation signal to the user equipment and a second home appliance that includes a UWB antenna; receive, from the second home appliance via the communication interface, a location measurement value of the user equipment measured with respect to the second home appliance, the location measurement value being based on a UWB signal between the user equipment and the second home appliance; determine location information about the user equipment, based on the location measurement value of the user equipment; receive, from a first home appliance that does not include a UWB antenna, information about the first home appliance; and register the first home appliance in the server device, based on the received information about the first home appliance and the location information about the user equipment.

The at least one processor may be further configured to execute the one or more instructions to identify, based on the received distance measurement request signal, the second home appliance as an appliance including the UWB antenna and being registered in the server device.

The distance measurement request signal may be transmitted from the user equipment to the server device, based on a selection of a quick response (QR) capturing menu or a near field communication (NFC) tagging menu on a device registration graphical user interface (GUI) displayed on the user equipment to register the first home appliance.

The at least one processor may be further configured to execute the one or more instructions to receive the location measurement value of the user equipment by receiving location information about the user equipment measured with respect to the second home appliance based on a location identification request signal, and the location identification request signal may be a UWB signal transmitted from the user equipment to the second home appliance based on selecting selection of a QR capturing button of the user equipment or performing NFC tagging with the user equipment.

The location measurement value may include azimuth information about the user equipment, measured with respect to the second home appliance, elevation information about the user equipment, measured with respect to the second home appliance, and distance information between the second home appliance and the user equipment.

The at least one processor may be further configured to execute the one or more instructions to determine the location information about the user equipment based on a comparison of information in a location information lookup table stored in the server device with the location measurement value of the user equipment.

The at least one processor may be further configured to execute the one or more instructions to receive the information about the first home appliance by receiving, based on access point (AP) information received by the first home appliance from the user equipment, the information about the first home appliance from the first home appliance through a Wireless Fidelity (WiFi) communication channel established between the user equipment and the first home appliance.

The information about the first home appliance may include a product name of the first home appliance, a manufacturing date of the first home appliance, and state information about the first home appliance.

The at least one processor may be further configured to execute the one or more instructions to: receive, via the communication interface, a control graphical user interface (GUI) request signal from the user equipment; control the communication interface to transmit the UWB communication module activation signal to the user equipment and the second home appliance, based on the received control GUI request signal; receive, from the second home appliance via the communication interface, the location measurement value of the user equipment measured in response to a location identification request signal transmitted from the user equipment; determine a third home appliance toward which the user equipment is oriented, based on the location measurement value of the user equipment; and control the communication interface to provide a graphical user interface (GUI) for controlling the determined third home appliance to the user equipment.

According to an aspect of the disclosure, a non-transitory computer-readable recording medium has recorded thereon a computer program that is executable by a computer to perform the method.

According to an aspect of the disclosure, a method of controlling a user equipment, includes: receiving a user input to select a quick response (QR) capturing menu or a near field communication (NFC) tagging menu on a device registration graphical user interface (GUI) displayed on the user equipment; transmitting a distance measurement request signal to a server device, based on the received user input; transmitting a location identification request signal, to a second home appliance identified by the server device as registered and including a UWB antenna, based on a user of the user equipment selecting a QR capturing button of the user equipment or performing NFC tagging with the user equipment; receiving a user input to input access point (AP) information in the device registration GUI displayed on the user equipment; and transmitting the received AP information to a first home appliance identified by a QR capture or an NFC tag.

BRIEF DESCRIPTION OF THE DRAWINGS

The above and other aspects, features, and advantages of certain embodiments of the present disclosure will be more apparent from the following description taken in conjunction with the accompanying drawings, in which:

FIG. **1** is a diagram illustrating a system for controlling a home appliance according to an embodiment of the disclosure;

FIG. **2** is a block diagram illustrating a structure of a server device according to an embodiment of the disclosure;

FIG. **3** is a diagram illustrating a user equipment, a second home appliance, and a server device according to an embodiment of the disclosure;

FIG. **4** is a block diagram illustrating a structure of a user equipment according to an embodiment of the disclosure;

FIG. **5** is a flow diagram illustrating a method, performed by a server device, of controlling a home appliance according to an embodiment of the disclosure;

FIG. **6** is a sequence diagram illustrating a method, performed by a server device in cooperation with other devices, of determining location information about a user equipment according to an embodiment of the disclosure;

FIG. **7** depicts an illustrative example of operation of a method, performed by a server device, of transmitting an ultra-wideband (UWB) communication module activation signal according to an embodiment of the disclosure;

FIG. **8** depicts an illustrative example of operation of a method for measuring, by a second home appliance, a location of a user equipment according to an embodiment of the disclosure;

FIG. **9** depicts an illustrative example of operation of a method, performed by a second home appliance, of mea-

suring a location of a user equipment by using a UWB signal according to an embodiment of the disclosure;

FIG. **10** depicts an illustrative example of operation of a method, performed by a server device, of determining location information about a user equipment according to an embodiment of the disclosure;

FIG. **11** further depicts an illustrative example of operation of a method, performed by a server device, of determining location information about a user equipment according to an embodiment of the disclosure;

FIG. **12** is a sequence diagram illustrating a method, performed by a server device in cooperation with other devices, of receiving information about a first home appliance according to an embodiment of the disclosure;

FIG. **13** is a sequence diagram illustrating another method, performed by a server device in cooperation with other devices, of receiving information about a first home appliance according to an embodiment of the disclosure;

FIGS. **14**A and **14**B depict illustrative examples of operation of a graphical user interface (GUI) provided by a server device to a user equipment to register a first home appliance in a certain account, according to an embodiment of the disclosure;

FIG. **15** is a sequence diagram illustrating a method, performed by a server device in cooperation with other devices, of providing a registered-home appliance control GUI to a user equipment, according to an embodiment of the disclosure;

FIG. **16** depicts an illustrative example of a registered-device control GUI displayed by a user equipment, according to an embodiment of the disclosure;

FIG. **17** depicts an illustrative example of a home appliance control GUI, displayed by a user equipment, according to an embodiment of the disclosure;

FIG. **18** depicts an illustrative example of operation of a method, performed by a user terminal, of providing a UWB mode and a fixed mode in a registered-device control GUI, according to an embodiment of the disclosure;

FIG. **19** depicts an illustrative example of operation of a method, performed by a user equipment, of providing information related to a neighboring home appliance in a fixed mode, according to an embodiment of the disclosure;

FIG. **20** depicts an illustrative example of operation of a method, performed by a user equipment, of providing a plurality of home appliance control GUIs, according to an embodiment of the disclosure;

FIG. **21** depicts another illustrative example of operation of a method, performed by a user equipment, of providing a plurality of home appliance control GUIs, according to an embodiment of the disclosure;

FIG. **22** is a block diagram illustrating structures of a first home appliance and a second home appliance according to an embodiment of the disclosure; and

FIG. **23** is a block diagram illustrating a structure of a user equipment in a network environment, according to various embodiments of the disclosure.

DETAILED DESCRIPTION

Throughout the disclosure, the expression "at least one of a, b or c" indicates any of: only a, only b, only c, both a and b, both a and c, both b and c, all of a, b, and c, or variations thereof.

Terms used herein will be described in brief, and the disclosed embodiments of the disclosure will be described in detail.

Although terms used in the disclosure are selected with general terms popularly used at present under the consideration of functions in the disclosure, the terms may vary according to the intention of those of ordinary skill in the art, judicial precedents, introduction of new technology, etc. In addition, in a specific case, the applicant voluntarily may select terms, and in this case, the meaning of the terms is disclosed in a corresponding description part of an embodiment of the disclosure. Thus, the terms used in the disclosure should be defined not by the simple names of the terms but by the meaning of the terms and the contents throughout the disclosure.

Throughout the entirety of the specification of the disclosure, when it is assumed that a certain part includes a certain component, the term 'including' means that a corresponding component may further include other components unless specially described to the contrary. The term used in the embodiments of the disclosure such as "unit" or "module" indicates a unit for processing at least one function or operation, and may be implemented in hardware, software, or in a combination of hardware and software.

Hereinafter, embodiments of the disclosure will be described in detail with reference to the attached drawings to allow those of ordinary skill in the art to easily carry out the embodiments of the disclosure. However, an embodiment of the disclosure may be implemented in several different forms, and is not limited to the embodiment of the disclosure described herein. To clearly describe an embodiment of the disclosure, parts that are not associated with the description have been omitted from the drawings, and throughout the entire disclosure, identical reference numerals refer to identical parts.

The disclosure will primarily describe various components as "home appliances" or "appliances" as an example use case. However, it is noted that the principles disclosed within are broadly applicable to a variety of devices and are not limited to the contexts of appliances or residential homes.

FIG. **1** is a diagram illustrating a system for controlling a home appliance according to an embodiment of the disclosure.

Referring to FIG. **1**, a system for controlling a home appliance (hereinafter, a home appliance control system) according to an embodiment of the disclosure may include a server device **110**, a first home appliance **120**, a user equipment **130**, and a second home appliance **140**. However, all the illustrated components are not essential components. A home appliance control system may be implemented by more components than the illustrated components or fewer components than the illustrated components.

The first home appliance **120** and the second home appliance **140**, according to an embodiment of the disclosure, may communicate with the user equipment **130** through wireless fidelity (WiFi) communication. The first home appliance **120** and the second home appliance **140** may connect to the server device **110** through an access point (AP) device **150**. The first home appliance **120** and the second home appliance **140** may perform WiFi communication with the AP device **150** and may connect to the server device **110** by connecting to the Internet through the AP device **150**. The second home appliance **140**, according to an embodiment of the disclosure, may be an ultra-wideband (UWB) device including a UWB communication module, and may measure a location of the user equipment **130** based on a UWB measurement signal. The first home appliance **120** according to an embodiment of the disclosure may not include a UWB communication module.

The first home appliance **120** may provide various functions while communicating with the user equipment **130** and the server device **110**. For example, the first home appliance **120** may connect to the server device **110** and may be registered in the server device **110**. The first home appliance **120** may provide various functions through an application executed on the user equipment **130**. The application may operate in conjunction with the server device **110**. The application may provide a function such as monitoring, control, automation, voice assistant, etc., of the first home appliance **120**. When the first home appliance **120** is registered in the server device **110**, it may mean that device information about the first home appliance **120** (a model name, a serial number, a manufacturing date, etc.), user account information about the first home appliance **120**, network information about the first home appliance **120** (an Internet protocol (IP) address, etc.), and so forth are stored in the server device **110**. Thus, on an application executed on the user equipment **130**, a user logging in through a user account may transmit a control command for controlling the first home appliance **120** to the server device **110**, and the server device **110** may transmit the control command to the first home appliance **120** based on the network information about the first home appliance **120**.

To provide such an application function, the first home appliance **120** needs to be registered in the server device **110** and has to establish communication with the server device **110**. The first home appliance **120** may not be able to provide an application function and various functions provided in the server device **110**, in a new product state of not yet being registered in the server device **110** after release from a factory. Such a new product state may be referred to as an out-of-box (00B) state.

As described above, the new product state may mean a state where the first home appliance **120** is not registered in the server device **110**. To register the first home appliance **120** in the server device **110**, the first home appliance **120** has to switch to a network connection mode to establish WiFi communication connection with the user equipment **130**, and has to receive information for connection of the AP device **150** (a service set identifier (SSID) of the AP device **150**, an ID of the AP device **150**, a password, an authentication scheme, an encryption method, an authentication key, etc.) from the user equipment **130**.

In this case, to switch the first home appliance **120** to the network connection mode for WiFi communication connection with the user equipment **130**, it is necessary for the user to operate a button of the first home appliance **120**. For example, when the first home appliance **120** is an air cleaner, the user may switch the air cleaner to the network connection mode to establish WiFi communication with the user equipment **130** by long pressing an air volume button of the air cleaner or long pressing a reservation button of a remote control of the air cleaner. In this case, a method to switch to the network connection mode varies from home appliance to home appliance, such that the user may in various cases capture a quick response (QR) code attached onto a surface of the first home appliance **120** using the user equipment **130** or perform near field communication (NFC) tagging by touching an NFC tag region of the first home appliance **120** using the user equipment **130**, whereby the first home appliance **120** may obtain a guide to switch to the network connection mode.

In a general registration process of a home appliance, information (a product name, a product serial number, a manufacturing date, etc.) of the home appliance may be automatically transmitted to the server device **110**, but a location of the home appliance may be designated by a user input. For example, when a home appliance is a refrigerator, a user input to set a location of the refrigerator as a "kitchen" may be required. In this case, a user input to designate a location of a home appliance is required, causing a problem in terms of user convenience and a difficulty in designating an exact location of the home appliance. When a home appliance to be registered includes a UWB communication module, a UWB signal may be received from another home appliance including the UWB communication module and an exact location of the home appliance to be registered may be measured based on the received UWB signal. However, in case of a home appliance without a UWB communication module, it is difficult to measure an exact location of the home appliance. Herein, the first home appliance **120** to be registered is assumed to be a home appliance without a UWB communication module.

Thus, according to an embodiment of the disclosure, a technique of utilizing the user equipment **130** including a UWB communication module and the second home appliance **140** including a UWB communication module to register the location of the first home appliance **120** without a UWB communication module is proposed.

In order for the user to register the first home appliance **120** in the server device **110**, a process of communication connection between the user equipment **130** and the first home appliance **120** is required. The first home appliance **120** to which the user equipment **130** is to connect, and/or a type of the first home appliance **120**, may be recognized by an action of capturing a QR code displayed on the first home appliance **120** by using the user equipment **130**, or by an action of placing the user equipment **130** in adjacent to the NFC tag region of the first home appliance **120** to perform NFC tagging. Either such action requires that the user equipment **130** and the first home appliance **120** are to be located very close to each other during registration of the first home appliance **120**. Thus, when the location of the user equipment **130** is measured, the location of the user equipment **130** may be registered as the location of the first home appliance **120**.

According to an embodiment of the disclosure, the second home appliance **140** may include a UWB communication module, and the second home appliance **140** may be a home appliance already registered in the server device **110**. According to an embodiment of the disclosure, the second home appliance **140** may serve as a reference point for measuring a relative location of the user equipment **130** located adjacent to the first home appliance **120**, and thus may be secured in position due to a fixed location thereof in the house. For example, the second home appliance **140** may include, but is not limited to, an artificial intelligence (AI) speaker, an induction range, an illuminating device, etc.

According to an embodiment of the disclosure, to receive a guide for registering the first home appliance **120** in the server device **110**, the user may capture the QR code displayed on the first home appliance **120** at a distance very close to the first home appliance **120**, or may touch the user equipment **130** to an NFC tag region of the first home appliance **120** to perform NFC tagging. When the user selects a QR capturing button of the user equipment **130** or performs NFC tagging, a location identification request signal may be transmitted from the user equipment **130** to the second home appliance **140**.

The second home appliance **140** according to an embodiment of the disclosure may measure a location of the user equipment **130** based on the received location identification request signal. The second home appliance **140** may mea-

sure a relative location measurement value of the user equipment **130** with respect to the second home appliance **140**, based on a UWB signal that is the location identification request signal transmitted from a UWB antenna embedded in the user equipment **130**. In this case, the location measurement value of the user equipment **130** may include azimuth information and elevation information about the user equipment **130** measured with respect to the second home appliance **140** and distance information about the user equipment **130** with respect to the second home appliance **140**. That is, the second home appliance **140** may measure, as the location measurement value, coordinates at which the user equipment **130** is located in a spherical coordinate system having the second home appliance **140** as the origin.

The second home appliance **140** according to an embodiment of the disclosure may transmit the measured location measurement value of the user equipment **130** to the server device **110**. The server device **110** according to an embodiment of the disclosure may determine location information about the user equipment **130** based on a registered location information lookup table of a home appliance (for brevity, hereinafter, a "lookup table"). The server device **110** according to an embodiment of the disclosure may have stored a lookup table including location information about a registered home appliance in the house and a location measurement value of the registered home appliance. For example, when an air conditioner in the house is registered in the server device **110**, the lookup table may have stored a model name of the air conditioner, location information about the air conditioner (a "living room" where the air conditioner is installed), and a location measurement value of the air conditioner (coordinates at which the air conditioner is located with respect to the second home appliance **140**).

The server device **110** according to an embodiment of the disclosure may compare the received location measurement value of the user equipment **130** with the location measurement value of the registered home appliance, included in the lookup table, to determine the location information about the user equipment **130**. For example, when it is determined that the location measurement value of the user equipment **130** is most similar to the location measurement value of the registered air conditioner as a result of comparison between the location measurement value of the user equipment **130** and the lookup table, the location information about the user equipment **130** may be determined as the location information about the registered air conditioner. Thus, when the location information about the registered air conditioner is a "living room", the location information about the user equipment **130** may be determined as the "living room".

Together with a process, performed by the server device **110** according to an embodiment of the disclosure, of determining the location information about the user equipment **130**, registration of the first home appliance **120** may be performed. When the user captures the QR code attached onto the surface of the first home appliance **120** to be registered, by using the user equipment **130**, or performs NFC tagging by touching the user equipment **130** to the NFC tag region of the first home appliance **120**, a registration guide of the first home appliance **120** may be displayed on the user equipment **130**. According to an embodiment of the disclosure, when the first home appliance **120** switches to the network connection mode based on the registration guide and WiFi communication is established between the user equipment **130** and the first home appliance **120**, information about the AP device **150** may be transmitted from the user equipment **130** to the first home appliance **120**. The first home appliance **120** may connect to the server device **110** based on the received information about the AP device **150**, and transmit information (a product name, a product serial number, a manufacturing date, etc.) of the first home appliance **120** to the server device **110**. The first home appliance **120** may transmit user account information received from the user equipment **130** to the server device **110** to allow the server device **110** to store the user account information together.

The server device **110**, according to an embodiment of the disclosure, may use, as the location information about the first home appliance **120**, the location information about the user equipment **130** determined based on the location measurement value of the user equipment **130** transmitted from the second home appliance **140**. The server device **110**, according to an embodiment of the disclosure, may register the first home appliance **120** in the server device **110**, based on the information about the first home appliance **120** transmitted from the first home appliance **120** and the location information about the first home appliance **120**. The server device **110**, according to an embodiment of the disclosure, may update the lookup table by matching the information about the first home appliance **120**, the location information about the first home appliance **120**, and the location measurement value of the first home appliance **120** (which is the same as the location measurement value of the user equipment **130**).

According to an embodiment of the disclosure, in registration of the first home appliance **120**, an exact location of which is difficult to measure because of absence of the UWB communication module therein, the location of the user equipment **130** located closest to the first home appliance **120** may be used as the location of the first home appliance **120**. In this case, by using the UWB communication module included in the user equipment **130** and the UWB communication module included in the second home appliance **140**, the location of the user equipment **130** may be accurately measured. Thus, the location of the first home appliance **120** including no UWB communication module may be accurately recognized by the server device **110**.

FIG. **2** is a block diagram illustrating a structure of a server device according to an embodiment of the disclosure.

Referring to FIG. **2**, the server device **110** may include a communication interface **210**, a processor **220**, and a memory **230**. However, all the illustrated components are not essential components. The server device **110** may be implemented by more or less components than the illustrated components.

Hereinafter, the aforementioned components will be described sequentially.

The communication interface **210** may include one or more components that enable communication between the server device **110** and the first home appliance **120**, between the server device **110** and the user equipment **130**, or between the server device **110** and the second home appliance **140**.

According to an embodiment of the disclosure, the communication interface **210** may receive a distance measurement request signal from the user equipment **130**. The distance measurement request signal may be transmitted from the user equipment **130** to the server device **110** when a user input to select a QR capturing menu or an NFC tagging menu is received in a device registration graphical user interface (GUI) of the user equipment **130**. The distance measurement request signal, according to an embodiment of the disclosure, may be a signal allowing the server device **110** to identify existence of a home appliance including a

UWB communication module among registered home appliances in relation to a user account.

According to an embodiment of the disclosure, the communication interface **210** may transmit a UWB communication module activation signal to the user equipment **130** and the second home appliance **140** based on the received distance measurement request signal. The UWB communication module activation signal may induce activation of the UWB antennas respectively included in the user equipment **130** and the second home appliance **140** to induce a preparation stage for the second home appliance **140** to measure the location of the user equipment **130**.

According to an embodiment of the disclosure, the communication interface **210** may receive a location identification request signal from the user equipment **130**, and transmit the received location identification request signal to the second home appliance **140**. The location identification request signal may be transmitted from the user equipment **130** to the server device **110** when the user presses the QR capturing button of the user equipment **130**, or when the user touches the NFC tag region of the first home appliance **120** using the user equipment **130** to perform NFC tagging. The location identification request signal, according to an embodiment of the disclosure, may induce the second home appliance **140** to measure a location measurement value of the user equipment **130** based on a UWB signal transmitted from the UWB antenna of the user equipment **130**.

According to an embodiment of the disclosure, the communication interface **210** may receive a location measurement value of the user equipment **130** from the second home appliance **140**. In this case, the location measurement value of the user equipment **130** may include azimuth information and elevation information about the user equipment **130** with respect to the second home appliance **140** and distance information about the user equipment **130** with respect to the second home appliance **140**.

According to an embodiment of the disclosure, the communication interface **210** may receive information about the first home appliance **120** from the first home appliance **120**. The first home appliance **120** may receive information about the AP device **150** from the user equipment **130** in a registration process, and connect to the server device **110** based on the received information about the AP device **150**, and transmit the information about the first home appliance **120** to the server device **110**.

According to an embodiment of the disclosure, the communication interface **210** may receive a control GUI screen request signal from the user equipment **130**. In this case, the control GUI screen request signal may request a control GUI screen of a home appliance toward which the user equipment **130** is oriented.

The processor **220** may control an overall operation of the server device **110** by using a program, an instruction, or information stored in the memory **230**. The processor **220** may be implemented as one or more processors. The processor **220** may control an operation of components included in the server device **110**.

According to an embodiment of the disclosure, the processor **220** may determine whether there is a home appliance including a UWB communication module among home appliances registered in the server device **110**, based on the distance measurement request signal transmitted from the user equipment **130**. The processor **220** may identify a home appliance having these qualities and designate it for use in later processes as the second home appliance **140**.

According to an embodiment of the disclosure, the processor **220** may determine the location information about the user equipment **130**, based on the location measurement value of the user equipment **130** transmitted from the second home appliance **140**. The processor **220** may determine the location information about the user equipment **130** by using a registered-home-appliance location information lookup table **231** in the memory **230**. According to an embodiment of the disclosure, the processor **220** may compare a location measurement value of a registered home appliance stored in the registered-home-appliance location information lookup table **231** with the location measurement value of the user equipment **130**, in order to use location information about a registered home appliance, determined to be closest, as the location information about the user equipment **130**.

According to an embodiment of the disclosure, the processor **220** may register the first home appliance **120** based on the information about the first home appliance **120** received from the first home appliance **120**. As the location information about the first home appliance **120**, the location information about the user equipment **130** may be used.

According to an embodiment of the disclosure, when the processor **220** receives the location measurement value of the user equipment **130** from the second home appliance **140** after receiving the control GUI request signal from the user equipment **130**, the processor **220** may determine a third home appliance toward which the user equipment **130** is oriented. The processor **220** may determine the third home appliance toward which the user equipment **130** is oriented, by using the registered-home-appliance location information lookup table **231** in the memory **230**. According to an embodiment of the disclosure, the processor **220** may recognize the location of the user equipment **130** in the house through the location measurement value of the user equipment **130**, and compare the location of the user equipment **130** with a location measurement value of a registered home appliance stored in the registered-home-appliance location information lookup table **231** to determine the third home appliance toward which the user equipment **130** is oriented.

According to an embodiment of the disclosure, the processor **220** may select a GUI screen for controlling the third home appliance determined in a GUI list **232** for controlling registered home appliances in the memory **230**, and provide the selected GUI screen for controlling the third home appliance to the user equipment **130**.

The memory **230** may store a program for processing the processor **220** and store input/output data. For example, the memory **230** may store the registered-home-appliance location information lookup table **231** and the GUI list **232** for controlling the registered home appliances.

The registered-home-appliance location information lookup table **231** may be information in which information (a model name, a serial number, and a manufacturing date) of home appliances registered in the server device **110**, location information (places where the home appliances are installed) of the registered home appliances, and location measurement values (coordinates at which the home appliances are located with respect to the second home appliance **140**) of the registered home appliances are matched and stored.

The GUI list **232** for controlling the registered home appliances may be information where GUIs that may be provided to the user equipment **130** to control the home appliances registered in the server device **110** are stored. For example, when the air conditioner is registered in the server device **110**, a GUI for controlling a temperature of the air conditioner or changing a mode of the air conditioner may be included in the GUI list **232** for controlling the registered home appliances.

FIG. **3** is a diagram illustrating a user equipment, a second home appliance, and a server device according to an embodiment of the disclosure.

According to an embodiment of the disclosure, the second home appliance **140** may include a processor **320**, a communication module **332**, a UWB communication module **324**, and a memory **326**.

The second home appliance **140** may be an electronic device that performs a certain function. The second home appliance **140** may be arranged in a certain position in the house. The second home appliance **140** may serve as a reference point for measuring a relative location of the user equipment **130** located close to the first home appliance **120** and may be fixed at a certain position in the house without moving. The second home appliance **140** may include, for example, an AI speaker, an induction range, an illuminating device, a refrigerator, a kimchi refrigerator, a laundry machine, a television (TV), an air conditioner, an air cleaner, a steam closet, an oven, a microwave, an audio output device, a smart home hub device, etc.

The second home appliance **140** may perform its original function by including a certain home appliance function module. For example, in a refrigerator, the home appliance function module may include a cooler, a container, a door, a temperature sensor, a door opening/closing sensor, a lamp, etc. In another example, in a laundry machine, the home appliance function module may include a washing tub, a motor, a door, a door opening/closing sensor, a water supply unit, a drain unit, etc. In another example, in a vacuum cleaner, the home appliance function module may include a vacuum suction assembly, a dust container, a brush, etc.

The processor **320** may control an overall operation of the second home appliance **140**. The processor **320** may be implemented as one or more processors. The processor **320** may perform a certain operation by executing an instruction or a command stored in the memory **326**. The processor **320** may control an operation of components included in the second home appliance **140**.

The communication module **322** may wirelessly or wiredly communicate with an external device. The communication module **322** may communicate with the user equipment **130** and the server device **110**. The communication module **322** may communicate with the user equipment **130** by using a short-range communication scheme. For example, the communication module **322** may communicate with the user equipment **130** through Bluetooth or WiFi communication connection. The communication module **322** may communicate with the server device **110** by using a long-range communication scheme. For example, the communication module **322** may communicate with the AP device **150** through WiFi and with the server device **110** through a long-range communication network connected to the AP device **150**.

The communication module **322** may include a wireless communication module (e.g., a cellular communication module, a short-range wireless communication module, a global navigation satellite system (GNSS) communication module) or a wired communication module (e.g., a local area network (LAN) communication module or a power line communication module). The communication module **322** may perform short-range communication, and may use, for example, Bluetooth, Bluetooth Low Energy (BLE), short-range wireless communication (near field communication (NFC)), a wireless local area network (WLAN) (Wireless Fidelity (WiFi)), Zigbee, infrared data association (IrDA) communication, WiFi Direct (WFD), Ant+ communication, etc. In another example, the communication module **322** may perform short-range communication, and may communicate with an external device, for example, through a legacy cellular network, a 5-Generation (5G) network, a next-generation communication network, Internet, a computer network (e.g., a local area network (LAN) or a wide area network (WAN)), etc.

The communication module **322** may establish communication with the user equipment **130** and the server device **110** under control of the processor **320**. The communication module **322** may transmit a control signal and data to the user equipment **130** and the server device **110** or receive a control signal and data from the user equipment **130** and the server device **110**.

The second home appliance **140** may be registered at an account registered in the server device **110** and may communicate with the server device **110**. The second home appliance **140** may communicate with the user equipment **130** through a communication connection such as Bluetooth, WiFi, etc. According to an embodiment of the disclosure, the second home appliance **140** may communicate with another home appliance through a home network.

The UWB communication module **324** may include one or more components for allowing reception of a UWB signal transmitted from the UWB antenna included in the user equipment **130**. The UWB communication module **324** may include one or more components for causing communication between the user equipment **130** and the second home appliance **140**.

According to an embodiment of the disclosure, the UWB communication module **324** may include one or more components for allowing reception of a UWB signal. According to an embodiment of the disclosure, the UWB communication module **324** may include one or more components for causing UWB communication. UWB communication, which is ultra-wideband communication, may mean wireless communication to transmit large-volume information with low power over a wider band than an existing spectrum. Unlike a BLE communication technique for inferring existence of a user equipment in a specific space, a UWB communication technique may accurately determine a location where the user equipment exists. When the UWB communication technique is used, azimuth information and elevation information about the user equipment **130** with respect to the second home appliance **140** and distance information about the user equipment **130** with respect to the second home appliance **140** may be accurately measured. That is, when the UWB communication technique is used, the location of the user equipment **130** with respect to the second home appliance **140** may be accurately measured as coordinates of a spherical coordinate system.

The UWB communication module **324** according to an embodiment of the disclosure may include at least one UWB antenna. The at least one UWB antenna may receive a UWB signal transmitted from the UWB communication module **324** of the user equipment **130**, and measure the exact location of the user equipment **130** based on the received UWB signal.

The UWB communication module **324** according to an embodiment of the disclosure may establish UWB communication with the user equipment **130** under control of the processor **320**. The UWB communication module **324** may transmit a control signal and data to the user equipment **130** or receive a control signal and data from the user equipment **130**.

The memory **326** may store various information, data, an instruction, a program, etc., required for an operation of the second home appliance **140**. The memory **326** may include

at least one of or a combination of volatile memory or non-volatile memory. The memory **326** may include a storage medium of at least one type of a flash memory type, a hard disk type, a multimedia card micro type, a card type memory (e.g., an SD or XD memory, etc.), a RAM, an SRAM, a ROM, an EEPROM, a PROM, a magnetic memory, a magnetic disk, an optical disk, or the like. The memory **326** may correspond to a web storage or a cloud server that performs a storage function on the Internet.

The user equipment **130** may include a processor **310**, a communication module **312**, a UWB communication module **314**, a memory **316**, and an input/output interface **318**.

The processor **310** may control an overall operation of the user equipment **130**. The processor **310** may be implemented as one or more processors. The processor **310** may perform a certain operation by executing an instruction or a command stored in the memory **326**.

The communication module **312** may wirelessly or wiredly communicate with an external device. The communication module **312** may communicate with the second home appliance **140** and the server device **110**. The communication module **312** may communicate with the second home appliance **140** through a short-range communication scheme. The communication module **312** may communicate with the server device **110** by using a long-range communication scheme.

The communication module **312** may include a wireless communication module (e.g., a cellular communication module, a short-range wireless communication module, a GNSS communication module) or a wired communication module (e.g., an LAN communication module or a power line communication module). The communication module **312** may perform short-range communication, and may use, for example, Bluetooth, BLE, short-range wireless communication (NFC), a WLAN (WiFi), Zigbee, IrDA communication, WFD, Ant+ communication, etc. In another example, the communication module **312** may perform short-range communication, and may communicate with an external device, for example, through a legacy cellular network, a 5G network, a next-generation communication network, Internet, a computer network (e.g., an LAN or a WAN), etc.

The communication module **312** may establish communication with the second home appliance **140** and the server device **110** under control of the processor **310**. The communication module **312** may transmit a control signal and data to the second home appliance **140** and the server device **110** or receive a control signal and data from the second home appliance **140** and the server device **110**.

The UWB communication module **314** may include one or more components for allowing transmission of a UWB signal that may be received by the UWB antenna included in the second home appliance **140**. The UWB communication module **314** may include one or more components for causing communication between the user equipment **130** and the second home appliance **140**.

The UWB communication module **314** according to an embodiment of the disclosure may include a UWB antenna. The UWB communication module **314** according to an embodiment of the disclosure may include at least three UWB antennas. After the user equipment **130** receives a user input to select the QR capturing button or performs NFC tagging after the UWB communication module activation signal from the server device **110**, the location identification request signal may be transmitted from the user equipment **130** to the second home appliance **140**. The location identification request signal according to an embodiment of the disclosure may be a UWB signal transmitted from the UWB antenna of the user equipment **130** to the UWB antenna of the second home appliance **140**. The second home appliance **140** may accurately measure the location of the user equipment **130** with respect to the second home appliance **140** based on the location identification request signal that is transmitted to the second home appliance **140** by using the UWB antenna.

The UWB communication module **314** may establish communication with the second home appliance **140** under control of the processor **310**, and may transmit or receive a control signal and data to or from the second home appliance **140**.

The memory **316** may store various information, data, an instruction, a program, etc., required for an operation of the user equipment **130**. The memory **316** may include at least one of or a combination of volatile memory or non-volatile memory. The memory **316** may include a storage medium of at least one type of a flash memory type, a hard disk type, a multimedia card micro type, a card type memory (e.g., an SD or XD memory, etc.), a RAM, an SRAM, a ROM, an EEPROM, a PROM, a magnetic memory, a magnetic disk, an optical disk, or the like. The memory **316** may correspond to a web storage or a cloud server that performs a storage function on the Internet.

The memory **316** stores an application for registering the first home appliance **120** or controlling the first home appliance **120** and the second home appliance **140**. The processor **310** may execute an application to register the first home appliance **120** or control the first home appliance **120** and the second home appliance **140**. The application may provide registration of the first home appliance **120** and monitoring, control, automation, a voice assistance, etc., of the first home appliance **120** and the second home appliance **140**. The memory **316** may previously store an application or receive an application from a cloud server and store the application.

The input/output interface **318** may receive commands or data to be used in a component (e.g., the processor **310**) of the user equipment from the outside (e.g., from a user) of the user equipment **130**. The input/output interface **318** may include, for example, a touch screen, a touch pad, a key, a microphone, a mouse, a keyboard, or a digital pen (e.g., a stylus pen). The input/output interface **318** may include, for example, a display, a speaker, a vibration device, etc.

The input/output interface **318** may provide a GUI related to an application and receive a user input being input through the GUI. The input/output interface **318** may have more abundant features than input/output interfaces of the first home appliance **120** and the second home appliance **140**. For example, the input/output interface **318** may include a touch screen, a key, a microphone, a speaker, a vibration device, etc., but the first home appliance **120** and the second home appliance **140** may include a limited number of keys and a small-size display. Embodiments of the disclosure may receive a control input to control the first home appliance **120** and the second home appliance **140** through the user equipment **130**, exploiting the fact of the user equipment **130** having more abundant input/output features than the first home appliance **120** and the second home appliance **140**.

FIG. **4** is a block diagram illustrating a structure of a user equipment according to an embodiment of the disclosure.

The user equipment **130** according to an embodiment of the disclosure may include the processor **310**, the communication module **312**, the UWB communication module **314**, the memory **316**, the input/output interface **318**, and a sensor **410**. The user equipment **130** may include abundant input/

output and sensor features when compared to the first home appliance **120** and the second home appliance **140**. For example, the input/output interface **318** may include a touch screen **421**, a touch panel **422**, a key **423**, a pen recognition panel **424**, a microphone **425**, a speaker **426**, etc. The sensor **410** may include an image sensor **411**, an acceleration sensor **412**, a gyro sensor **413**, an iris sensor **414**, a fingerprint sensor **415**, an illuminance sensor **416**, etc.

The user equipment **130** may control the first home appliance **120** and the second home appliance **140** by using the input/output interface **318** and the sensor **410**. The user equipment **130** may execute an application for controlling the first home appliance **120** and the second home appliance **140**, and establish communication connection with the first home appliance **120** and the second home appliance **140**. The user equipment **130** may receive a control signal in various forms through an application. The control signal may be input through the touch screen **421**, the touch panel **422**, the key **423**, the pen recognition panel **424**, the microphone **425**, etc. The user equipment **130** may provide an output in various forms through an application. The output of the application may be output through the touch screen **421**, the speaker **426**, etc. In an embodiment of the disclosure, the touch screen **421** and the touch panel **422** may be formed as one piece.

FIG. **5** is a flow diagram illustrating a method, performed by a server device, of controlling a home appliance according to an embodiment of the disclosure.

In operation S**501**, the server device **110**, according to an embodiment of the disclosure, may receive a distance measurement request signal from the user equipment **130**.

According to an embodiment of the disclosure, the user may register the first home appliance **120** in the server device **110** and desire to conveniently control the first home appliance **120** through an application installed in the user equipment **130**. In a process of registering the first home appliance **120** by using the user equipment **130**, information (a product name, a product serial number, a manufacturing date, etc.) of the first home appliance **120** may be automatically transmitted to the server device **110**. However, the first home appliance **120** lacks a UWB antenna, such that there may be a difficulty in automatically designating the location of the first home appliance **120** in the server device **110** by using the UWB communication technique. Thus, according to an embodiment of the disclosure, to register the first home appliance **120** in the server device **110**, a scheme may be proposed to measure the location of the user equipment **130** including the UWB antenna located close to the first home appliance **120** by using the UWB communication technique, and to use the measured location of the user equipment **130** as the location of the first home appliance **120**.

According to an embodiment of the disclosure, the user equipment **130** may display, on a display, a registered-device control GUI for controlling home appliances registered in the server device **110**. The user equipment **130** may display a device registration GUI on the display by receiving a user input to select a certain button (e.g., a plus (+) indication) displayed on the registered-device control GUI. According to an embodiment of the disclosure, the user may register the first home appliance **120** in the server device **110** through the device registration GUI displayed on the user equipment **130**.

According to an embodiment of the disclosure, to register the first home appliance **120** in the server device **110**, the first home appliance **120** has to receive information for connection to the AP device **150** from the user equipment **130**. To receive the information for connection to the AP device **150**, WiFi communication has to be established between the first home appliance **120** and the user equipment **130** such that the first home appliance **120** has to switch to the network connection mode. In this case, a method to switch to the network connection mode varies from home appliance to home appliance, such that the user may capture a QR code attached onto the first home appliance **120** using the user equipment **130** or perform NFC tagging by touching an NFC tag region of the first home appliance **120** using the user equipment **130**, whereby the first home appliance **120** may obtain a guide to switch to the network connection mode.

To this end, the user equipment **130** may receive a user input to select a QR code capturing menu or an NFC tagging menu in the device registration GUI. In this case, when the user equipment **130** receives the user input to select the QR code capturing menu or the NFC tagging menu from the user, the user equipment **130** may display a QR code capturing screen or a screen on which a method for performing NFC tagging is described. A process of receiving the user input to select the QR code capturing menu or the NFC tagging menu from the user equipment **130** may be the first process to register the first home appliance **120** in the server device **110**. Thus, at this time, the user equipment **130** may transmit a distance measurement request signal to the server device **110**.

According to an embodiment of the disclosure, when the user equipment **130** receives the user input to select the QR code capturing menu or the NFC tagging menu in the device registration GUI, the user equipment **130** may transmit the distance measurement request signal to the server device **110**. According to an embodiment of the disclosure, when the server device **110** receives the distance measurement request signal from the user equipment **130**, the server device **110** may identify existence of a home appliance having embedded therein a UWB antenna capable of measuring the location of the user equipment **130** (hereinafter, a UWB home appliance) among home appliances registered in the server device **110**.

In operation S**502**, the server device **110**, according to an embodiment of the disclosure, may transmit a UWB communication module activation signal to the user equipment **130** and to the second home appliance **140** having embedded therein a UWB antenna, based on the received distance measurement request signal.

According to an embodiment of the disclosure, when the server device **110** receives the distance measurement request signal from the user equipment **130**, the server device **110** may identify existence of the UWB home appliance registered in the same user account as a user account of the user equipment **130** in the server device **110**. In this case, the registered UWB home appliance may be a home appliance that serves as a reference point with respect to which the location of the user equipment **130** is measured. The server device **110** may store location information about another registered home appliance in the house with respect to the registered UWB home appliance, as a lookup table (hereinafter, a registered-home appliance location information lookup table). According to an embodiment of the disclosure, the UWB home appliance registered in the server device **110** may be the second home appliance **140**.

According to an embodiment of the disclosure, where there is a registered UWB home appliance, the server device **110** may transmit the UWB communication module activation signal to the user equipment **130** and the second home appliance **140**. According to an embodiment of the disclosure, the UWB antenna included in the second home appli-

ance **140** may receive a UWB signal transmitted from the UWB antenna included in the user equipment **130**. In this case, the UWB communication module activation signal may be a signal for activating sensors of the UWB antennas respectively included in the user equipment **130** and the second home appliance **140**.

In operation S**503**, the server device **110**, according to an embodiment of the disclosure, may receive, from the second home appliance **140**, a location measurement value of the user equipment **130** measured with respect to the second home appliance **140** based on the UWB signals of the user equipment **130** and the second home appliance **140**. On the other hand, the server device **110** may receive the location measurement value of the user equipment **130** measured with respect to the second home appliance **140**, from the user equipment **130**.

According to an embodiment of the disclosure, to receive a guide for switching the first home appliance **120** to the network connection mode, the user may capture the QR code attached to the first home appliance **120** by using the user equipment **130** or touch an NFC tag region of the first home appliance **120** using the user equipment **130** to perform NFC tagging. In this case, to capture the QR code attached to the first home appliance **120**, the user equipment **130** needs to be located very close to the first home appliance **120**. To cause NFC tagging between the first home appliance **120** and the user equipment **130**, the user equipment **130** has to be attached to a certain region of the first home appliance **120** or be placed very close to the certain region, such that the user equipment **130** may be located very close to the first home appliance **120** in this case. Thus, in the case that the location of the user equipment **130** may be measured at a moment when the user presses a QR code capturing button or NFC tagging is performed, the measured location of the user equipment **130** may be used as the location of the first home appliance **120**.

According to an embodiment of the disclosure, when the user equipment **130** receives a user input to select the QR capturing button or NFC tagging is performed between the user equipment **130** and the first home appliance **120**, the location identification request signal may be transmitted from the user equipment **130** to the second home appliance **140**. According to an embodiment of the disclosure, the location identification request signal may be a UWB signal transmitted from the UWB antenna included in the user equipment **130** to the UWB antenna included in the second home appliance **140**.

According to an embodiment of the disclosure, the second home appliance **140** may measure a relative location measurement value of the user equipment **130** with respect to the second home appliance **140**, based on a UWB signal that is the received location identification request signal. In this case, the location measurement value of the user equipment **130** may include azimuth information and elevation information about the user equipment **130** measured with respect to the second home appliance **140** and distance information between the second home appliance **140** and the user equipment **130**. The server device **110** according to an embodiment of the disclosure may receive the location measurement value of the user equipment **130** from the second home appliance **140**.

In operation S**504**, the server device **110**, according to an embodiment of the disclosure, may determine the location information about the user equipment **130** based on the location measurement value.

According to an embodiment of the disclosure, the server device **110** may determine the location information about the user equipment **130** based on a a location information lookup table of registered home appliances (hereinafter, a "lookup table") stored in the server device **110**. According to an embodiment of the disclosure, the server device **110** may have stored a lookup table including location information and location measurement values of home appliances registered in the server device **110**. Herein, the location measurement values of the registered home appliances may mean values measured with respect to the second home appliance **140**, like the location measurement value of the user equipment **130**.

The server device **110** according to an embodiment of the disclosure may compare the location measurement value of the user equipment **130** with the location measurement values of the registered home appliances, included in the lookup table, to identify a registered home appliance determined to be most similar to the location measurement value of the user equipment **130**. The server device **110** according to an embodiment of the disclosure may determine the location information about the user equipment **130** by using the location information about the registered home appliance, which is determined to be most similar to the location measurement value of the user equipment **130**, as the location information about the user equipment **130**. Herein, the location information may mean information about a place, such as a room or section of a building, where an appliance is installed. For example, when a TV is installed in a living room of a house, the location information about the TV may indicate the living room.

In operation S**505**, the server device **110**, according to an embodiment of the disclosure, may receive information about the first home appliance **120** from the first home appliance **120** having no UWB antenna embedded therein.

According to an embodiment of the disclosure, a process of measuring the location of the user equipment **130** with respect to the second home appliance **140** may be performed simultaneously with a process of registering the first home appliance **120**. The process of registering the first home appliance **120** may be performed through WiFi communication established between the first home appliance **120** and the user equipment **130**.

According to an embodiment of the disclosure, the user equipment **130** may receive a user input to capture a QR code attached to the first home appliance **120**, thus identifying a uniform resource locator (URL) address included in the QR code and provide a guide for switching the first home appliance **120** to the network connection mode to the user. The user equipment **130** may establish NFC communication with the first home appliance **120** by performing NFC tagging with the first home appliance **120**. The user equipment **130** may be provided with the guide for switching the first home appliance **120** to the network connection mode from the first home appliance **120** through the established NFC communication, and provide the provided guide to the user.

In this case, the user may manipulate the first home appliance **120** according to the provided guide to switch the first home appliance **120** to the network connection mode, and establish WiFi communication between the first home appliance **120** and the user equipment **130**. The first home appliance **120**, according to an embodiment of the disclosure, may use a software enabled AP (SoftAP) that enables the first home appliance **120** to be recognized as a virtual AP. The SoftAP may be a WLAN client, but may be implemented as software serving as a wireless AP. The SoftAP may operate like the wireless AP. The first home appliance **120** may drive the SoftAP by using a WiFi module. The user

equipment **130** may establish WiFi communication connection with the first home appliance **120** by connecting to the SoftAP of the first home appliance **120**, and perform WiFi communication with the first home appliance **120**. WiFi communication connection between the user equipment **130** and the first home appliance **120** by using the SoftAP may correspond to WiFi Direct.

According to an embodiment of the disclosure, through WiFi communication established between the first home appliance **120** and the user equipment **130**, information about the AP device **150** (an SSID of the AP device **150**, an ID of the AP device **150**, a password, an authentication scheme, an encryption method, an authentication key, etc.) may be transmitted from the user equipment **130** to the first home appliance **120**. The first home appliance **120** may connect to the server device **110** based on the information about the AP device **150**, and transmit information (a product name, a product serial number, a manufacturing date, etc.) of the first home appliance **120** to the server device **110**. The first home appliance **120** may transmit user account information received from the user equipment **130** to the server device **110**.

In operation S**506**, the server device **110**, according to an embodiment of the disclosure, may register the first home appliance **120** in the server device **110** based on the received information about the first home appliance **120** and the location information about the user equipment **130**.

The server device **110**, according to an embodiment of the disclosure, may use the determined location information about the user equipment **130** as the location information about the first home appliance **120**. According to an embodiment of the disclosure, when the user registers the first home appliance **120** in the server device **110**, the user needs to locate the user equipment **130** at a distance very close to the first home appliance **120** and thus may use the location information about the user equipment **130** as the location information about the first home appliance **120**. For example, to register a refrigerator installed in the kitchen in the server device **110**, the user may obtain a guide for registering the refrigerator in the server device **110** by capturing the QR code attached onto a front surface of the refrigerator, and at this time, the location information about the user equipment **130** may be determined. The location of the user equipment **130** determined when the user captures the QR code on the front surface of the refrigerator is the same as the location of the refrigerator, such that the location information about the user equipment **130** determined at this time may be used as the location information about the refrigerator.

The server device **110** according to an embodiment of the disclosure may register the first home appliance **120** in the server device **110**, based on the location information about the first home appliance **120** that is the same as the location information about the user equipment **130** and the information about the first home appliance **120**. The server device **110**, according to an embodiment of the disclosure, may register the first home appliance **120** at a certain account of the server device **110**, based on the location information about the first home appliance **120** and the information about the first home appliance **120**. The server device **110**, according to an embodiment of the disclosure, may match the information about the first home appliance **120**, the location information about the first home appliance **120** (which is the same as the location information about the user equipment **130**), and the location measurement value of the first home appliance **120** (which is the same as the location measurement value of the user equipment **130**) to update them in the location information lookup table of registered home appliances.

According to an embodiment of the disclosure, after the first home appliance **120** is registered in the server device **110**, the first home appliance **120** may transmit state information, sensor information, monitoring information, a support request, a data processing request, etc., of the first home appliance **120** to the server device **110**. After the first home appliance **120** is registered in the server device **110**, the first home appliance **120** may receive a control signal from the server device **110** and operate.

Referring to FIG. **6**, a detailed description will be made of an operation, performed by the server device **110**, of receiving a location measurement value of the user equipment **130** from the second home appliance **140** and determining location information about the user equipment **130**.

FIG. **6** is a sequence diagram illustrating a method, performed by a server device in cooperation with other devices, of determining location information about a user equipment according to an embodiment of the disclosure.

The user equipment **130** according to an embodiment of the disclosure may execute an IoT application in operation S**601**, and transmit an ID and a password for execution of the IoT application to the server device **110** in operation S**602**. The IoT application installed in the user equipment **130**, according to an embodiment of the disclosure, may be an application capable of providing a function such as monitoring, control, automation, voice assistance, etc., of a home appliance registered at a certain account of the server device **110**.

The server device **110** according to an embodiment of the disclosure may perform user authentication in operation S**603** and transmit an authentication result to the user equipment **130** in operation S**604**. The server device **110** according to an embodiment of the disclosure may determine whether the ID and the password received from the user equipment **130** match an ID and a password stored in the server device **110** to perform user authentication. The server device **110** according to an embodiment of the disclosure may perform user authentication, and when the user equipment **130** is authenticated as a legitimate user, an authentication result may be transmitted to the user equipment **130**. The server device **110**, according to an embodiment of the disclosure, may provide the registered-device control GUI to the user equipment **130**. Referring to an illustrative scenario **700***a* depicted in FIG. **7**, registered home appliances (an illuminating device, an air conditioner, a TV, a speaker) may be controlled through the registered-device control GUI displayed on the display of the user equipment **130**.

In operation S**605**, the user equipment **130**, according to an embodiment of the disclosure, may receive a user input to select a QR capturing menu or an NFC tagging menu for obtaining a registration guide of a home appliance to be registered, from a device registration GUI.

Referring to the illustrative scenario **700***a* of FIG. **7**, the registered-device control GUI may be displayed on the display of the user equipment **130**, and the user may control not only the registered home appliances, but also attempt registration of a new home appliance, through the registered-device control GUI. According to an embodiment of the disclosure, the user equipment **130** may display the device registration GUI on the display by receiving a user input to select a plus button **710** that is a certain button displayed on the registered-device control GUI.

Referring to an illustrative scenario **700***b* depicted in FIG. **7**, the device registration GUI may be displayed on the display of the user equipment **130**, and a QR capturing menu **720** or an NFC tagging menu **730** may be included in the device registration GUI. The user may start a series of processes for registering a home appliance by selecting the QR capturing menu **720** or the NFC tagging menu **730** displayed on the device registration GUI.

In operation S**606**, the user equipment **130**, according to an embodiment of the disclosure, may transmit a distance measurement request signal from the user equipment **130** to the server device **110** in response to selection of the QR capturing menu or the NFC tagging menu. The distance measurement request signal according to an embodiment of the disclosure may be a signal serving as a trigger for determining whether a home appliance having embedded therein a UWB antenna capable of measuring a location of the user equipment **130** is registered in the server device **110**.

In operation S**607**, the server device **110**, according to an embodiment of the disclosure, may determine whether there is a UWB device having embedded therein a UWB antenna among home appliances registered at a certain account of the server device **110**. The UWB device, according to an embodiment of the disclosure, may be a device that serves as a reference point with respect to which the location of the user equipment **130** may be measured. For the described method of FIG. **6**, the second home appliance **140** is such a UWB device, and is so identified at operation S**607**.

In operations S**608** and S**609**, the server device **110**, according to an embodiment of the disclosure, may transmit the UWB communication module activation signal to the user equipment **130** and the second home appliance **140**. Referring to an illustrative scenario **700***c* depicted in FIG. **7**, the server device **110** may transmit the UWB communication module activation signal to the user equipment **130**, and to the second home appliance **140** that is a UWB device registered in the server device **110**. According to an embodiment of the disclosure, the UWB communication module activation signal may be a signal inducing activation of the UWB antennas respectively included in the user equipment **130** and the second home appliance **140** to exchange UWB signals with the user equipment **130** and the second home appliance **140**.

In operation S**610**, the user equipment **130**, according to an embodiment of the disclosure, may receive an input to select a QR capturing button or detect that NFC tagging is performed. According to an embodiment of the disclosure, to receive a guide for switching a home appliance to be registered to the network connection mode, the user may capture the QR code attached to the home appliance by using the user equipment **130** or touch a home appliance using the user equipment **130** to perform NFC tagging. Referring to an illustrative scenario **800***a* depicted in FIG. **8**, when a home appliance to be registered is a refrigerator, the user may capture the QR code attached onto the front surface of the refrigerator, or may touch a certain region (an NFC tag region) on the front surface of the refrigerator using the user equipment **130** to perform NFC tagging between the refrigerator and the user equipment **130**.

When the user equipment **130** captures the QR code attached onto the front surface of the refrigerator or is caused to touch the NFC tag region of the refrigerator to perform NFC tagging, the user equipment **130** is expected to be located at a distance very close to the refrigerator. Thus, when the user equipment **130** receives the user input to capture the QR code or detects that NFC tagging is performed, the location of the user equipment **130** may be used as a location of the refrigerator when the location of the user equipment **130** may be measured.

In operation S**611**, the user equipment **130**, according to an embodiment of the disclosure, may transmit the location identification request signal to the second home appliance **140**. According to an embodiment of the disclosure, when the user equipment **130** captures the QR code attached to a home appliance (the refrigerator) to be registered or performs NFC tagging with the home appliance (the refrigerator) to be registered, the user equipment **130** may transmit the location identification request signal to the second home appliance **140**.

According to an embodiment of the disclosure, the location identification request signal may be a UWB signal transmitted from the UWB antenna included in the user equipment **130** to the UWB antenna included in the second home appliance **140**. Referring to an illustrative scenario **800***b* depicted in FIG. **8**, the location identification request signal may be transmitted from the user equipment **130**, which is located very close to the refrigerator, to the second home appliance **140**. The second home appliance **140** may measure the location of the user equipment **130** based on the location identification request signal.

In operation S**612**, the second home appliance **140**, according to an embodiment of the disclosure, may measure the location measurement value of the user equipment **130** based on the UWB signal that is the location identification request signal. The location measurement value of the user equipment **130**, according to an embodiment of the disclosure, may include azimuth information and elevation information about the user equipment **130** measured with respect to the second home appliance **140** and distance information between the second home appliance **140** and the user equipment **130**. In addition, the location measurement value of the user equipment **130**, according to an embodiment of the disclosure, may include information related to existence of a wall on a linear distance between the second home appliance **140** and the user equipment **130**.

Referring to an illustrative scenario **900***a* depicted in FIG. **9**, the user equipment **130** may include three UWB antennas ANT **1**, ANT **2**, and ANT **3**. A tag A **910**, a tag B **920**, and a tag C **930** may indicate UWB antennas included in the second home appliance **140**. The tag A **910** may detect UWB signals received from the antenna ANT **1** and the antenna ANT **2**, but may fail to detect a UWB signal received from the antenna ANT **3**. The tag B **920** may detect the UWB signals received from the antennas ANT **1**, ANT **2**, and ANT **3**. The tag C **930** may detect the UWB signals received from the antenna ANT **2** and the antenna ANT **3**, but may fail to detect the UWB signal received from the antenna ANT **1**. Thus, the relative location of the user equipment **130** may be measured as a different value according to the location of the second home appliance **140**.

Referring to data of a data chart **900***b* presented in FIG. **9**, the UWB antenna included in the second home appliance **140** may measure a time-of-flight (ToF) result (or distance) between the user equipment **130** and the second home appliance **140**, an angle of arrival (AoA) azimuth result of the user equipment with respect to the second home appliance **140**, and an AoA elevation result.

According to an embodiment of the disclosure, the UWB antenna included in the second home appliance **140** may measure a distance between the second home appliance **140** and the user equipment **130** by using a double-side two-way ranging (DS-TWR) technique. The DS-TWR technique may determine a time of flight of a UWB signal transmitted from the user equipment **130** and multiply the determined time of

flight by a speed of light to measure a distance between the second home appliance **140** and the user equipment **130**.

According to an embodiment of the disclosure, the UWB antenna included in the second home appliance **140** may measure an azimuth and an elevation of the user equipment **130** with respect to the second home appliance **140** by using an AoA-based positioning method. In this case, referring to an example positional chart **900***c* presented in FIG. **9**, the azimuth (Φ) may be an angle formed between a z axis and the user equipment **130** when the second home appliance **140** is assumed to exist at the origin. The elevation (θ) may be an angle formed between an x axis and the user equipment **130** when the second home appliance **140** is assumed to exist at the origin.

In operation S**613**, the second home appliance **140**, according to an embodiment of the disclosure, may determine the location measurement value of the user equipment **130**.

In operation S**614**, the second home appliance **140**, according to an embodiment of the disclosure, may transmit the location measurement value of the user equipment **130** to the server device **110**. Alternatively, the second home appliance **140** may transmit the location measurement value of the user equipment **130** to the user equipment **130** which may then transmit the location measurement value thereof to the server device **110**.

In operation S**615**, the server device **110**, according to an embodiment of the disclosure, may determine the location information about the user equipment **130** based on the registered-home-appliance location information lookup table. A detailed description of a method, performed by the server device **110**, of determining location information about the user equipment **130** will be described with reference to FIG. **10**.

In the illustrative embodiment described with reference to FIGS. **6** to **9**, an example is described where the first home appliance **120** is a home appliance not registered in the server device **110**, but the disclosure is not limited thereto. That is, the first home appliance **120** may be a home appliance already registered in the server device **110**, wherein the server device **110** does not yet store the location information measurement value of the first home appliance **120**. The user equipment **130** may perform an NFC tagging or QR code capturing process of the first home appliance **120**, and in this case, the location information measurement value measured between the user equipment **130** and the second home appliance **140** may match and be stored in the first home appliance **120**.

FIG. **10** depicts an illustrative example of operation of a method, performed by a server device, of determining location information about a user equipment according to an embodiment of the disclosure.

According to an embodiment of the disclosure, the server device **110** may have stored a lookup table including location information and location measurement values of home appliances registered in the server device **110**. Herein, a lookup table including location information and location measurement values of registered home appliances may be referred to as a "registered-home-appliance location information lookup table". Referring to FIG. **10**, when an induction range, a laundry machine, and an air conditioner are registered in the server device **110**, the location information and the location measurement values of the registered home appliances may be stored in a lookup table **1010**.

The location information about the registered home appliance, according to an embodiment of the disclosure, may mean a location where the registered home appliance is installed. Referring to the lookup table **1010** of FIG. **10**, location information about the induction range may be stored as a kitchen, location information about the refrigerator may be stored as a laundry room, and location information about the air conditioner may be stored as a living room.

The location measurement value of the registered home appliance according to an embodiment of the disclosure may include an azimuth (Φ) parameter value and an elevation (θ) parameter value of the registered home appliance with respect to the second home appliance **140**, a distance (D) between the second home appliance **140** and the registered home appliance, and a line of sight indicator value indicating whether an obstacle exists on a linear path between the registered home appliance and the second home appliance **140**.

Referring to the lookup table **1010** of FIG. **10**, a location measurement value of the induction range may include a distance value (D: 0.6), an azimuth parameter value (Φ: 240 degrees), an elevation parameter value (θ: 90 degrees), and information indicating that no obstacle exists on the linear path. The location measurement value of the refrigerator may include a distance value (D: 3.5), an azimuth parameter value(Φ: 120 degrees), an elevation parameter value(θ: 95 degrees), and information indicating that an obstacle exists on the linear path. The location measurement value of the air conditioner may include a distance value (D: 2.2), an azimuth parameter value(Φ: 45 degrees), an elevation parameter value(θ: 80 degrees), and information indicating that no obstacle exists on the linear path.

The server device **110** according to an embodiment of the disclosure may compare location measurement values of home appliances stored in the lookup table **1010** with the location measurement value of the user equipment **130** and determine, as the location information about the user equipment **130**, location information about a registered home appliance determined to be most similar to the location measurement value of the user equipment **130**.

A location measurement value **1020** of the user equipment **130** of FIG. **10** may include a distance value (D: 1.0), an azimuth parameter value(Φ: 220 degrees), an elevation parameter value(θ: 100 degrees), and information indicating that no obstacle exists on the linear path. In this case, the server device **110** may compare that a location measurement value **1020** of the user equipment **130** with location measurement values of the induction range, the laundry machine, and the air conditioner and determine that the location measurement value **1020** of the user equipment **130** is most similar to the location measurement value of the induction range. When the server device **110** determines that the location measurement value **1020** of the user equipment **130** is most similar to the location measurement value of the induction range, the location information about the induction range may be determined as the location information about the user equipment **130**.

The server device **110** according to an embodiment of the disclosure may determine a kitchen, which is location information about the induction range, as the location information about the user equipment **130**. The server device **110**, according to an embodiment of the disclosure, may store information **1030** including the determined location information and the location measurement value of the user equipment **130** in data.

FIG. **11** further depicts an illustrative example of operation of a method, performed by a server device, of determining location information about a user equipment according to an embodiment of the disclosure.

Referring to FIG. **11**, a refrigerator may be a home appliance not registered in the server device **110**, and the user equipment **130** may be located at a distance very close to the refrigerator to register the refrigerator in the server device **110**. Thus, the location information about the user equipment **130** may be used as the location information about the refrigerator to be registered.

Referring to FIG. **11**, the induction range may be located in the kitchen in the house, the air conditioner may be located in the living room in the house, and the laundry machine may be located in the laundry room in the house. All of the induction range, the air conditioner, and the laundry machine may be home appliances previously registered in the server device **110**. The location information about the induction range, the air conditioner, and the laundry machine and the location measurement value measured with respect to an AI speaker that is the second home appliance **140** may be stored in lookup tables **1110**, **1120**, and **1130** of the server device **110**.

According to an embodiment of the disclosure, the server device **110** may compare location measurement values included in the lookup tables **1110**, **1120**, and **1130** of registered home appliances, stored in the server device **110**, with a location measurement value **1140** of the user equipment **130** and determine that the user equipment **130** is located closest to the induction range. In this case, the server device **110** may determine location information **1150** of the user equipment **130** as the kitchen that is the location information about the induction range.

According to an embodiment of the disclosure, the server device **110** may determine the location information about the user equipment **130**, considering the registered home appliance and a line of sight indicating whether an obstacle exists on the linear path of the AI speaker that is the second home appliance **140**. For example, referring to FIG. **11**, the laundry machine may be installed in the laundry room, and a wall may exist between the AI speaker and the laundry machine. In this case, information indicating whether an obstacle exists in the location measurement value of the laundry machine may be a value indicating that "an obstacle exists". Thus, when the line of sight indicating whether the obstacle exists in the location measurement value of the user equipment **130** indicates that "no obstacle exists", then it is highly likely that the location information about the user equipment **130** is not the laundry room.

FIG. **12** is a sequence diagram illustrating a method, performed by a server device in cooperation with other devices, of receiving information about a first home appliance according to an embodiment of the disclosure.

In the series of processes illustrated in FIG. **12**, the user equipment **130** is provided with a guide for registering the first home appliance **120** in the server device **110** by capturing the QR code attached to the front surface of the first home appliance **120**, and registers the first home appliance **120** in the server device **110** based on the provided guide.

According to an embodiment of the disclosure, to register the first home appliance **120** in the server device **110**, information about the first home appliance **120** has to be transmitted to the server device **110**.

In operation S**1201**, the user equipment **130**, according to an embodiment of the disclosure, may receive the user input to capture the QR code attached to the front surface of the first home appliance **120**. The user equipment **130** may display a camera GUI for capturing the QR code when receiving the user input to select the QR capturing menu in the device registration GUI. The user may capture the QR code attached onto the front surface of the first home appliance **120** by using the camera GUI displayed on the user equipment **130**.

In operation S**1202**, the user equipment **130**, according to an embodiment of the disclosure, may display a device registration guide by using an URL of the QR code. The user equipment **130** according to an embodiment of the disclosure may identify an URL address in the captured QR code. The user equipment **130** may display a device registration guide included in the identified URL address on the user equipment **130**. In this case, the device registration guide may include a manipulation method of the first home appliance **120** for switching the first home appliance **120** to the network connection mode. For example, when the first home appliance **120** is a laundry machine, a WiFi button on the front surface of the laundry machine needs to be pressed to switch the laundry machine to the network connection mode. In this case, the device registration guide may include information indicating that a user input to press a WiFi button of the laundry machine for several seconds is required.

In operation S**1203**, the first home appliance **120**, according to an embodiment of the disclosure, may receive a user input to operate in an AP mode. The user input, according to an embodiment of the disclosure, may be an input to press a certain button of the first home appliance **120** for switching of the first home appliance **120** to the network connection mode that is the AP mode. For example, when the first home appliance **120** is the laundry machine, a user input to select a WiFi button on the front surface of the laundry machine may have to be received to switch the laundry machine to the network connection mode that is the AP mode.

In operation S**1204**, the first home appliance **120**, according to an embodiment of the disclosure, may operate in the AP mode in response to the user input. The first home appliance **120**, according to an embodiment of the disclosure, may use a soft AP to allow the first home appliance **120** to be recognized as a virtual AP, so as to establish WiFi communication with the user equipment **130**. When the first home appliance **120**, according to an embodiment of the disclosure, receives the user input to operate in the AP mode, the first home appliance **120** may operate the soft AP by using the WiFi module.

In operation S**1205**, according to an embodiment of the disclosure, WiFi communication may be established between the first home appliance **120** and the user equipment **130**. The user equipment **130**, according to an embodiment of the disclosure may connect to the soft AP of the first home appliance **120** to establish WiFi communication connection with the first home appliance **120**, and perform WiFi communication with the first home appliance **120**. By using the soft AP according to an embodiment of the disclosure, WiFi communication connection established between the user equipment **130** and the first home appliance **120** may correspond to a WiFi Direct scheme.

In operation S**1206**, the user equipment **130** according to an embodiment of the disclosure may receive information about the AP device **150** from the user. The information about the AP device **150** according to an embodiment of the disclosure may include an SSID of the AP device **150**, and an ID, a password, an authentication scheme, an encryption method, and an authentication key, etc., of the AP device **150**. In operation S**1207**, the user equipment **130**, according to an embodiment of the disclosure, may transmit the received information about the AP device **150** to the first home appliance **120**.

In operation S**1208**, the first home appliance **120**, according to an embodiment of the disclosure, may connect to the server device **110** by using the received information about the AP device **150**, and then may transmit the information about the first home appliance **120** to the server device **110**. The first home appliance **120**, according to an embodiment of the disclosure, may connect to the AP device **150** by using the information (the ID, password, etc.) of the AP device **150**, and connect to the server device **110** through the Internet connected to the AP device **150**. The information about the first home appliance **120**, according to an embodiment of the disclosure, may be information including a product name, a product serial number, a manufacturing date, etc., of the first home appliance **120**. The information about the first home appliance **120** may lack information related to the location of the first home appliance **120**.

In operation S**1209**, the server device **110**, according to an embodiment of the disclosure, may match the received information about the first home appliance **120** and the location information about the user equipment **130**, and register the first home appliance **120** in the server device **110**. According to an embodiment of the disclosure, when the user registers the first home appliance **120** in the server device **110**, the user may use the location information about the user equipment **130** as the location information about the first home appliance **120** because the user equipment **130** is located at a distance very close to the first home appliance **120**. According to an embodiment of the disclosure, the server device **110** may update registered-home-appliance location information lookup table by matching the information about the first home appliance **120** and the location information about the user equipment **130** simultaneously with registering the first home appliance **120** in the server device **110**.

FIG. **13** is sequence diagram illustrating another method, performed by a server device in cooperation with other devices, of receiving information about a first home appliance according to an embodiment of the disclosure.

In the series of processes illustrated in FIG. **13**, a guide for registering the first home appliance **120** in the server device **110** is provided using an NFC scheme by locating the user equipment **130** close to the NFC tag region of the first home appliance **120**, and the first home appliance **120** is registered based on the provided guide.

According to an embodiment of the disclosure, to register the first home appliance **120** in the server device **110**, information about the first home appliance **120** has to be transmitted to the server device **110**.

In operation S**1301**, the user equipment **130**, according to an embodiment of the disclosure, may perform NFC tagging and transmit, to the first home appliance **120**, information indicating that NFC tagging is performed. According to an embodiment of the disclosure, the user equipment **130** may establish NFC communication with the first home appliance **120** as the user equipment **130** is located adjacent to the NFC tag region included in the first home appliance **120**.

In operation S**1302**, the first home appliance **120**, according to an embodiment of the disclosure, may transmit device information to the user equipment **130**. According to an embodiment of the disclosure, the device information may include the manipulation method of the first home appliance **120** for switching the first home appliance **120** to the network connection mode. According to an embodiment of the disclosure, the first home appliance **120** may transmit the device information to the user equipment **130** through NFC communication established with the user equipment **130**.

In operation S**1303**, the user equipment **130**, according to an embodiment of the disclosure, may display the device registration guide. The device registration guide, according to an embodiment of the disclosure, may be a guide including the manipulation method of the first home appliance **120** for switching the first home appliance **120** to the network connection mode. The user equipment **130** may display the device registration guide on the display of the user equipment **130**.

A description of operations S**1304** to S**1310** is the same as a description of operations S**1203** to S**1209** of FIG. **12**, and thus will be omitted.

FIGS. **14**A and **14**B depict illustrative examples of operation of a GUI provided by a server device to a user equipment to register a first home appliance in a certain account, according to an embodiment of the disclosure.

Referring to an illustrative scenario **1400***a* depicted in FIG. **14**A, the user equipment **130** may display the registered-device control GUI on the display. According to an embodiment of the disclosure, the user equipment **130** may receive a user input to control registered home appliances through the registered-device control GUI. Referring to the illustrative scenario **1400***a* of FIG. **14**, the registered-device control GUI may display a list of the registered home appliances (e.g., an illuminating device, a speaker device, an air conditioner, and a TV), and the user may control a home appliance by selecting the home appliance to be controlled from the list. According to an embodiment of the disclosure, the user equipment **130** may receive a user input to register a new home appliance through the registered-device control GUI. According to an embodiment of the disclosure, the user equipment **130** may provide the device registration GUI for device registration to the user by receiving a user input to select a plus button **1410** that is a certain button displayed on the registered-device control GUI.

Referring to an illustrative scenario **1400***b* depicted in FIG. **14**A, the user equipment **130** may display the device registration GUI on the display. According to an embodiment of the disclosure, the device registration GUI may include a QR code capturing menu **420** or an NFC tagging menu **1430**. The user may select the QR code capturing menu **1420** or the NFC tagging menu **1430**, displayed on the device registration GUI, thereby starting a series of processes for registering a home appliance in the server device **110**. When a QR code is attached to a home appliance to be registered, the user may be provided with a guide for home appliance registration by capturing the QR code attached to the home appliance with the user equipment **130**. Thus, in this case, in the device registration GUI, the QR code capturing menu **1420** may be selected. When an NFC tag region is included in the home appliance to be registered, the user may be provided with a guide for home appliance registration by locating the user equipment **130** in adjacent to the NFC tag region. Thus, in this case, in the device registration GUI, the NFC tagging menu **1430** may be selected.

Referring to an illustrative scenario **1400***c* depicted in FIG. **14**A, the user equipment **130** may display an interface **1440** for capturing a QR code in response to reception of a user input to select the QR code capturing menu **1420**. The interface **1440** for capturing the QR code may display a camera screen for capturing the QR code, together with a guide phrase such as "Capture the QR code attached to the home appliance to be registered". The user may capture the QR code attached to the home appliance by using the camera screen.

Referring to the illustrative scenario **1400***c* of FIG. **14**A, the user equipment **130** may display an interface **1450** for NFC tagging in response to reception of a user input to select the NFC tagging menu **1430**. The interface **1450** for NFC tagging may display a guide phrase such as "For NFC tagging, touch the home appliance to be registered, with your smartphone". By placing the user equipment **130** adjacent to an NFC tag region of the home appliance to be registered, the user may induce NFC tagging between the user equipment **130** and the home appliance.

Referring to an illustrative scenario **1400***d* depicted in FIG. **14**B, the user equipment **130** may display a device registration guide **1460**. When the user captures a QR code of the home appliance to be registered using the user equipment **130**, the user equipment **130** may identify an URL address from the captured QR code. The user equipment **130** may display the device registration guide included in the identified URL address. When the user locates the user equipment **130** on the NFC tag region of the home appliance, the user equipment **130** may be provided with the device registration guide **1460** from the home appliance through NFC communication established with the home appliance. The user equipment **130** may display the provided device registration guide **1460**. For example, when the home appliance to be registered is the laundry machine, the device registration guide **1460** may include a manipulation method of the laundry machine to register the laundry machine in the server device **110**. At this time, the device registration guide **1460** may include a guide such as "Turn on the laundry machine and press the WiFi button at the top of the menu of the laundry machine for 3 seconds".

Referring to an illustrative scenario **1400***e* depicted in FIG. **14**B, the user equipment **130** may display an interface **1470** for receiving AP information. According to an embodiment of the disclosure, when the home appliance to be registered receives the user input and operates in the AP mode, WiFi communication may be established between the user equipment **130** and the home appliance. In this case, to enable the home appliance to be registered to connect to the server device **110**, the user has to provide information about the AP device **150**. Thus, when the user equipment **130** determines that the home appliance operates in the AP mode and WiFi communication is established between the home appliance and the user equipment **130**, the user equipment **130** may display the interface **1470** for receiving a user input with respect to the information about the AP device **150**. The user may provide information for connecting to the AP device **150** to the home appliance, by inputting the ID and password of the AP device **150**.

According to an embodiment of the disclosure, the home appliance, having received the information about the AP device **150**, may connect to the AP device **150** and connect to the server device **110** through the Internet connected to the AP device **150**. The home appliance, according to an embodiment of the disclosure, may connect to the server device **110**, provide information about the home appliance (e.g. a product name, a serial number, and a manufacturing date of the home appliance), and register the home appliance in the server device **110**. In this case, the information about the home appliance does not include information related to the location of the home appliance, but the server device **110** may use location information about the user equipment **130** transmitted from a UWB device (e.g. the second home appliance **140**) existing in the house as the information about the home appliance.

Referring to an illustrative scenario **1400***f* depicted in FIG. **14**B, the user equipment **130** may display an interface **1480** indicating that the home appliance is registered. For example, when the laundry machine is registered, the interface **1480** may show a product name and a location of the laundry machine.

FIG. **15** is a sequence diagram illustrating a method, performed by a server device in cooperation with other devices, of providing a registered-home appliance control GUI to a user equipment, according to an embodiment of the disclosure.

According to an embodiment of the disclosure, the user may control the home appliance registered in the server device **110** through the registered-device control GUI displayed on the user equipment **130**. When the UWB sensor of the user equipment **130** is already activated, the location of the user equipment **130** may be measured. The server device **110** may determine a third home appliance toward which the user equipment **130** is oriented, based on the measured location of the user equipment **130**, and provide a GUI for controlling the third home appliance to the user equipment **130**.

The user equipment **130** according to an embodiment of the disclosure may receive a user input to select a UWB icon in operation S**1501**, and the user equipment **130** may transmit a control GUI request signal to the server device **110** in operation S**1502**.

Referring to an illustrative example of a GUI depicted in FIG. **16**, the user equipment **130**, according to an embodiment of the disclosure, may transmit the control GUI request signal to the server device **110** by receiving a user input to select a UWB icon **1610** displayed on the registered-device control GUI. The user equipment **130**, according to another embodiment of the disclosure, may transmit the control GUI request signal to the server device **110** by receiving a user input to select a "UWB Device" icon **1620** from a list of registered home appliances, displayed on the registered-device control GUI. The user equipment **130**, according to another embodiment of the disclosure, may transmit the control GUI request signal to the server device **110** by receiving a user input to pull down an upper bar of the user equipment **130** and to select a "UWB Device" icon displayed on the upper bar.

In operations S**1503** and S**1504**, the server device **110**, according to an embodiment of the disclosure, may transmit the UWB communication module activation signal to the user equipment **130** and the second home appliance **140**. According to an embodiment of the disclosure, the UWB communication module activation signal may be a signal for activating sensors of the UWB antennas respectively included in the user equipment **130** and the second home appliance **140** to exchange UWB signals with the user equipment **130** and the second home appliance **140**.

In operation S**1505**, the user equipment **130**, according to an embodiment of the disclosure, may transmit the location identification request signal to the second home appliance **140**. According to an embodiment of the disclosure, the location identification request signal may be a UWB signal transmitted from the UWB antenna included in the user equipment **130** to the UWB antenna included in the second home appliance **140**.

In operation S**1506**, the second home appliance **140**, according to an embodiment of the disclosure, may measure the location measurement value of the user equipment **130** based on the UWB signal that is the location identification request signal. The location measurement value of the user equipment **130**, according to an embodiment of the disclosure, may include azimuth information and elevation information about the user equipment **130** measured with respect

to the second home appliance **140** and distance information between the second home appliance **140** and the user equipment **130**. The location measurement value of the user equipment **130** may include information about a direction in which the user equipment **130** is oriented.

The second home appliance **140**, according to an embodiment of the disclosure, may determine the location measurement value of the user equipment **130** in operation S**1507** and transmit the location measurement value of the user equipment **130** to the server device **110** in operation S**1508**.

In operation S**1509**, the server device **110**, according to an embodiment of the disclosure, may determine a third home appliance toward which the user equipment **130** is oriented, based on the registered-home-appliance location information lookup table. The server device **110**, according to an embodiment of the disclosure, may compare location measurement values of home appliances, included in the registered-home-appliance location information lookup table, with the location measurement value of the user equipment **130**, to determine the third home appliance toward which the user equipment is oriented. The server device **110** may determine the third home appliance that is a home appliance toward which the user equipment **130** is oriented, among the registered home appliances, based on a direction of the user equipment **130** included in the location measurement value and a difference in location measurement value between the user equipment **130** and the home appliances.

In operation S**1510**, the server device **110**, according to an embodiment of the disclosure, may select a GUI screen for controlling the determined third home appliance from a GUI list for controlling the registered home appliances. According to an embodiment of the disclosure, the GUI list for controlling the registered home appliances may be information where GUIs that may be provided to the user equipment **130** to control the home appliances registered in the server device **110** are stored. For example, when the user equipment **130** is determined to be oriented toward the air conditioner, the server device **110** may select a GUI for controlling the air conditioner from the GUI list for controlling the registered home appliances.

The server device **110**, according to an embodiment of the disclosure, may provide the selected GUI to the user equipment **130** in operation S**1511**, and the user equipment **130** may display the provided GUI on the display in operation S**1512**.

In an embodiment of the disclosure, operations S**1508** to S**1511** are described as being performed by the server device **110**, but the disclosure is not limited thereto. That is, the second home appliance **140** may transmit the location measurement value of the user equipment **130** to the user equipment **130**. Thereafter, the user equipment **130** may determine the home appliance toward which the user equipment **130** is oriented, based on the registered-home-appliance location information lookup table, stored in the user equipment **130**. Thereafter, the user equipment **130** may display a GUI screen for controlling the determined home appliance thereon.

FIG. **17** depicts an illustrative example of a home appliance control GUI, displayed by a user equipment, according to an embodiment of the disclosure.

Referring to FIG. **17**, the user equipment **130**, according to an embodiment of the disclosure, may display a GUI for controlling the home appliance toward which the user equipment **130** is determined to be oriented, on the display. Hereinbelow, a description will be made on the assumption that the user equipment **130** is oriented toward the air conditioner among the home appliances registered in the server device **110**.

Referring to an illustrative scenario **1700***a* depicted in FIG. **17**, the user equipment **130**, according to an embodiment of the disclosure, may provide, to the user, an air conditioner control GUI for controlling the air conditioner toward which the user equipment **130** is oriented. According to an embodiment of the disclosure, the user may control the current temperature of the air conditioner, control a mode (a cooling mode or a dehumidifying mode) of the air conditioner, obtain information related to the current temperature, control a speed of a fan of the air conditioner, control ON/OFF of a windless mode of the air conditioner, etc., through an air conditioner control GUI **1710**.

Referring to an illustrative scenario **1700***b* depicted in FIG. **17**, the user equipment **130**, according to an embodiment of the disclosure, may display information **1720** related to other peripheral devices under the air conditioner control GUI **1710** for controlling the air conditioner toward which the user equipment **130** is determined to be oriented. The information **1720** related to the other peripheral devices may be a text or an image indicating a device name, a device type, etc. In this case, the user equipment **130** may display the information **1720** related to the other peripheral devices as default settings, but may display the information **1720** related to the other peripheral devices when the user inputs a drag input under a screen of the air conditioner control GUI **1710**. The information **1720** related to the other peripheral devices may include a list of home appliances, which are registered in the server device **110** and have location measurement values measured with respect to a UWB device and stored in the server device **110**. The user may select a home appliance included in the information **1720** related to the other peripheral devices, thus being provided with a GUI for controlling the home appliance. For example, even when the current air conditioner control GUI **1710** is displayed on the user equipment **130**, the user may select a TV from the information **1720** related to the other peripheral devices at the bottom, thus being provided with a GUI for controlling the TV.

Referring to an illustrative scenario **1700***c* depicted in FIG. **17**, the user equipment **130**, according to an embodiment of the disclosure, may display the other peripheral devices as indicated by **1730** under the air conditioner control GUI **1710**, taking account of location measurement values of the other peripheral devices with respect to the UWB device. In this case, a home appliance located adjacent to the direction in which the user equipment **130** is oriented may be displayed in bold or in a large font, and a home appliance located in a direction far from the direction in which the user equipment **130** is oriented may be displayed in a default font or displayed small. For example, while the user equipment **130** is determined to be oriented toward the air conditioner and thus the air conditioner control GUI **1710** is mainly provided, when the user equipment **130** is determined to be located in a direction adjacent to the TV and the refrigerator, then the TV and the refrigerator may be displayed in bold or in large fonts when compared to a water purifier and a light bulb device.

FIG. **18** depicts an illustrative example of operation of a method, performed by the user equipment **130**, of providing a UWB mode and a fixed mode in a registered-device control GUI, according to an embodiment of the disclosure.

Referring to an illustrative scenario **1800***a* depicted in FIG. **18**, an air conditioner control GUI **1810** may include a UWB icon **1820** for an operation in the UWB mode. When

the UWB icon **1820** is displayed on the air conditioner control GUI **1810**, a to-be-controlled-home appliance GUI may change with a direction in which the user equipment **130** is oriented. For example, when the direction of the user equipment **130** is changed from the direction in which the user equipment **130** is oriented toward the air conditioner to the direction in which the user equipment **130** is oriented toward the TV, the user equipment **130** may change from the air conditioner control GUI **1810** to a TV control GUI and provide the TV control GUI to the user.

Referring to an illustrative scenario **1800***b* depicted in FIG. **18**, the air conditioner control GUI **1810** for controlling the air conditioner may include a fixing icon **1830** for an operation in the fixed mode. Upon receiving an input to touch the UWB icon **1820** from the user, the user equipment **130**, according to an embodiment of the disclosure, may change the UWB icon **1820** to the fixing icon **1830** and provide the air conditioner control GUI **1810** in the fixed mode. The user equipment **130**, according to an embodiment of the disclosure, may receive a particular gesture or a particular voice command as well as a user input to touch the UWB icon **1820**, thereby changing the UWB icon **1820** to the fixing icon **1830**. According to an embodiment of the disclosure, when the air conditioner control GUI **1810** is changed to the fixed mode, the user equipment **130** may fixedly display an existing to-be-controlled-home appliance GUI even in the case that the direction in which the user equipment **130** is oriented is changed. For example, when the air conditioner control GUI **1810** is in the fixed mode, the user equipment **130** may fixedly provide the air conditioner control GUI **1810** even in the case that the user changes the direction of the user equipment **130** from the direction in which the user equipment **130** is oriented toward the air conditioner to the direction in which the user equipment **130** is oriented toward the TV.

According to an embodiment of the disclosure, the user equipment **130** may automatically switch the device control GUI from the UWB mode to the fixed mode. When receiving a touch input to control a device by using the device control GUI from the user, the user equipment **130**, according to an embodiment of the disclosure, may determine that the user is to continue device control, and automatically switch from the UWB mode to the fixed mode. For example, when the user controls the temperature of the air conditioner by using the air conditioner control GUI **1810**, the user equipment **130** may determine that the user continues to control the air conditioner, and automatically switch the air conditioner control GUI **1810** to the fixed mode.

According to an embodiment of the disclosure, the user equipment **130** may automatically switch the device control GUI from the fixed mode to the UWB mode. When the user equipment **130**, according to an embodiment of the disclosure, does not receive any input from the user for a specific time, the user equipment **130** may determine that the user is not intending to control the device further, and may automatically switch the device control GUI from the fixed mode to the UWB mode. For example, when the user does not make any manipulation using the air conditioner control GUI **1810**, the user equipment **130** may determine that the user is not intending to control the air conditioner further, and may automatically switch the air conditioner control GUI **1810** to the UWB mode.

FIG. **19** depicts an illustrative example of operation of a method, performed by a user equipment, of providing information related to a neighboring home appliance in a fixed mode, according to an embodiment of the disclosure.

Referring to an illustrative scenario **1900***a* depicted in FIG. **19**, the user equipment **130**, according to an embodiment of the disclosure, may display a GUI for controlling the home appliance toward which the user equipment **130** is determined to be oriented. When the user equipment **130** is determined to be oriented toward the air conditioner, the user equipment **130** may display an air conditioner control GUI **1910**. The user equipment **130**, according to an embodiment of the disclosure, may provide the air conditioner control GUI **1910** in the "fixed mode", and in the fixed mode, a to-be-controlled home appliance GUI may continue to provide the air conditioner control GUI **1910** even when the direction in which the user equipment **130** is oriented is changed. The user equipment **130**, according to an embodiment of the disclosure, may provide the air conditioner control GUI **1910** in the fixed mode, and at the same time, display information **1920** related to other peripheral devices under the air conditioner control GUI **1910**. The information **1920** related to the other peripheral devices may include a list of home appliances, which are registered in the server device **110** and have location measurement values measured with respect to a UWB device and stored in the server device **110**. For example, the user equipment **130** may display an icon for selecting a TV, a refrigerator, a water purifier, and a light bulb **1** in the information **1920** related to the other peripheral devices. For example, when the user selects the TV, the user equipment **130** may change the air conditioner control GUI **1910** to a TV control GUI.

Referring to an illustrative scenario **1900***b* depicted in FIG. **19**, when the direction in which the user equipment **130** is oriented is changed, the air conditioner control GUI **1910** is not changed, but a list of home appliances included in information **1930** related to the other peripheral devices may be changed. According to an embodiment of the disclosure, in the fixed mode, even when the direction in which the user equipment **130** is oriented is changed, the air conditioner control GUI **1910** that is a main control GUI is not changed. However, according to the direction in which the user equipment **130** is oriented, the information **1930** related to the other peripheral devices may be updated by changing the order of the information **1930** or adding information to or deleting information from the information **1930**. For example, when it is determined that the direction in which the user equipment **130** is oriented is closer to the water purifier and farther away from the TV, the information **1930** related to the other peripheral devices may be updated such that the water purifier is changed to a higher order and the TV is deleted.

Referring to an illustrative scenario **1900***c* depicted in FIG. **19**, when it becomes clear that the direction in which the user equipment **130** is oriented is toward a particular home appliance, the user equipment **130** may highlight and display the particular home appliance in information **1940** related to the other peripheral devices. For example, when it becomes apparent that the direction in which the user equipment **130** is oriented is toward the water purifier, the air conditioner control GUI **1910** is displayed in the main GUI because of the fixed mode. In this case, the user equipment **130** may highlight and display an icon indicating the water purifier in the information **1940** related to the other peripheral devices.

FIG. **20** depicts an illustrative example of operation of a method, performed by a user equipment, of providing a plurality of home appliance control GUIs, according to an embodiment of the disclosure.

Referring to an illustrative scenario **2000***a* depicted in FIG. **20**, the user equipment **130**, according to an embodi-

ment of the disclosure, may simultaneously display a plurality of home appliance control GUIs. When the direction in which the user equipment **130** is oriented is determined as a plurality of home appliances rather than one home appliance, the user equipment **130** may simultaneously display the plurality of home appliance control GUIs. For example, the user equipment **130** may be oriented toward both the air conditioner and the TV. Alternatively, it may be difficult to determine whether the direction in which the user equipment **130** is oriented is the air conditioner or the TV. In this case, the user equipment **130** may display an air conditioner control GUI **2010** and a TV control GUI **2020** at the same time. According to an embodiment of the disclosure, the user may simultaneously control the air conditioner and the TV by using the air conditioner control GUI **2010** and the TV control GUI **2020** displayed on the user equipment **130**. The user equipment **130**, according to an embodiment of the disclosure, may display information **2030** related to the other peripheral devices under the air conditioner control GUI **2010** and the TV control GUI **2020**.

Referring to an illustrative scenario **2000***b* depicted in FIG. **20**, the user equipment **130**, according to an embodiment of the disclosure, may provide the air conditioner control GUI **2010** in the fixed mode and the TV control GUI **2020** in the UWB mode. In this case, when the direction in which the user equipment **130** is oriented is changed, the air conditioner control GUI **2010** provided in the fixed mode may continue to be provided. However, the TV control GUI **2020** provided in the UWB mode may be changed to a GUI for controlling a home appliance located in a direction in which the user equipment **130** is actually oriented.

FIG. **21** depicts another illustrative example of operation of a method, performed by a user equipment, of providing a plurality of home appliance control GUIs, according to an embodiment of the disclosure.

Referring to an illustrative scenario **2100***a* depicted in FIG. **21**, the user equipment **130** may display an air conditioner control GUI **2110** and information **2120** related to the other peripheral devices. According to an embodiment of the disclosure, the user equipment **130** may receive an input to drag a particular home appliance icon to a main screen in the information **2120** related to the other peripheral devices. For example, the user may desire to control the air conditioner and the TV at the same time. In this case, the user may desire to display the air conditioner control GUI **2010** and a TV control GUI at the same time on the user equipment **130**. According to an embodiment of the disclosure, the user may be provided with the TV control GUI by dragging a TV icon included in the information **2120** related to the other peripheral devices to the main screen.

Referring to an illustrative scenario **2100***b* depicted in FIG. **21**, the user equipment **130** may display the air conditioner control GUI **2110** at the top and a TV control GUI **2130** at the bottom. According to an embodiment of the disclosure, in response to an input to drag the TV icon from the user, the TV control GUI **2130** may be displayed under the air conditioner control GUI **2110**. In this case, the order of a GUI screen displayed in an upper end and a GUI screen displayed in a lower end may be changed according to a user's drag input. For example, when the user desires to display the TV control GUI **2130** in the upper end, the user may drag the TV control GUI **2130** to the upper end while selecting the TV control GUI **2130**. In this case, the TV control GUI **2130** may be displayed in the upper end and the air conditioner control GUI **2110** may be displayed in the lower end.

FIG. **22** is a block diagram illustrating structures of a first home appliance and a second home appliance according to an embodiment of the disclosure.

The first home appliance **120** and the second home appliance **140**, according to an embodiment of the disclosure, may each correspond to a home appliance **2200**. The home appliance **2200**, according to an embodiment of the disclosure, may include a sensor **2210**, an output interface **2220**, an input interface **2230**, a memory **2240**, a communication module **2250**, a home appliance function module **2260**, a power module **2280**, and a processor **2290**. The home appliance **2200** may include various combinations of components shown in FIG. **22**, and all the components shown in FIG. **22** are not essential components.

The home appliance **2200** of FIG. **22** may correspond to the second home appliance **140** described with reference to FIG. **3**, the memory **2240** may correspond to the memory **326** described with reference to FIG. **3**, the processor **1590** may correspond to the processor **320** described with reference to FIG. **3**, and the communication module **2250** may correspond to the communication module **322** described with reference to FIG. **3**.

The sensor **2210** may include various types of sensors, for example, an image sensor, an infrared sensor, an ultrasonic sensor, a lidar sensor, a human detection sensor, a motion detection sensor, a proximity sensor, an illuminance sensor, etc. A function of each sensor may be intuitively construed from a name of the sensor by those of ordinary skill in the art, and thus will not be described in detail.

The output interface **2220** may include a display **2221**, an audio output module **2222**, etc. The output interface **2220** may output various notifications, messages, information, etc., generated by the processor **2290**.

The input interface **2230** may include a key **2231**, a touch screen **2232**, etc. The input interface **2230** may receive a user input and transmit the same to the processor **2290**.

The memory **2240** may store various information, data, an instruction, a program, etc., required for an operation of the home appliance **2200**. The memory **2240** may include at least one of volatile memory or non-volatile memory, or a combination thereof. The memory **2240** may include a storage medium of at least one type of a flash memory type, a hard disk type, a multimedia card micro type, a card type memory (e.g., a secure digital (SD) or extreme digital (XD) memory, etc.), a random-access memory (RAM), a static random-access memory (SRAM), a read-only memory (ROM), an electrically erasable programmable read-only memory (EEPROM), a programmable read-only memory (PROM), a magnetic memory, a magnetic disk, or an optical disk. Moreover, the home appliance **2200** may operate a web storage or a cloud server that performs a storage function on the Internet.

The communication module **2250** may include at least one of a short-range wireless communication module **2252** or a long-range wireless communication module **2254**, or a combination thereof. The communication module **2250** may include at least one antenna for wireless communication with another device.

The short-range wireless communication module **2252** may include, but not limited to, a Bluetooth communication module, a Bluetooth Low Energy (BLE) communication module, a near field communication (NFC) module, a wireless local area network (WLAN) (Wireless Fidelity (WiFi)) communication module, a ZigBee communication module, an infrared Data Association (IrDA) communication module, a WiFi Direct (WFD) communication module, an ultra-

wideband (UWB) communication module, an Ant+ communication module, a microwave (uWave) communication module, etc.

The long-range wireless communication module **2254** may include a communication module performing various types of long-range communication, and may include a mobile communication module. The mobile communication module may transmit and receive a radio signal to and from at least one of a base station, an external terminal, or a server over a mobile communication network. Herein, the radio signal may include various forms of data corresponding to transmission/reception of a voice call signal, a video communication call signal, or a text/multimedia message.

The home appliance function module **2260** may include an operation module that performs the original function of the home appliance **2200**. When the home appliance **2200** is a laundry machine, the home appliance function module **2260** may include a washing module. The washing module may include a washing tube, a water supply unit, a motor, a door, a detergent inlet, and the like. When the home appliance **2200** is a refrigerator, the home appliance function module **2260** may include a refrigerating/freezing module. The refrigerating/freezing module may include a container, a cooler, a door, a temperature sensor, etc. When the home appliance **2200** is a drying machine, the home appliance function module **2260** may include a drying module. The drying module may include a laundry container, a motor, a dehumidifying unit, a drain unit, a door, a dust filter, a condenser, and the like. When the home appliance **2200** is a cleaning machine, the home appliance function module **2260** may include a cleaning module. The cleaning module may include a vacuum suction unit, a dust bin, a filter, a dust transfer pipe, and so forth.

The processor **2290** may control an overall operation of the home appliance **2200**. The processor **2290** may control components of the home appliance **2200** by executing a program stored in the memory **2240**.

According to an embodiment of the disclosure, the processor **2290** may include a separate network processing unit (NPU) that performs a machine learning model. The processor **2290** may also include a central processing unit (CPU), a graphic processing unit (GPU), etc.

FIG. **23** is a block diagram illustrating a structure of a user equipment **2301** in a network environment **2300**, according to various embodiments of the disclosure.

The user equipment **2301** of FIG. **23** may correspond to the user equipment **130** described above. The processor **310** described with reference to FIG. **3** may correspond to a processor **2320**, and the communication module **312** described with reference to FIG. **3** may correspond to a communication module **2390**. The memory **316** described with reference to FIG. **3** may correspond to a memory **2330**, and the input/output interface **318** described with reference to FIG. **3** may correspond to an input module **2350**, an audio output module **2355**, a display module **2360**, an audio module **2370**, and a haptic module **2379**. The first home appliance **120** and the second home appliance **140** may correspond to an electronic device **2302** or an electronic device **2304**.

Referring to FIG. **23**, in the network environment **2300**, the user equipment **2301** may communicate with the electronic device **2302** via a first network **2398** (e.g., a short-range wireless communication network), or may communicate with at least one of the electronic device **2304** or a server **2308** via a second network **2399** (e.g., a long-range wireless communication network). According to an embodiment of the disclosure, the user equipment **2301** may communicate with the electronic device **2304** via the server **2308**. According to an embodiment of the disclosure, the user equipment **2301** may include a processor **2320**, a memory **2330**, an input module **2350**, an audio output module **2355**, a display module **2360**, an audio module **2370**, a sensor module **2376**, an interface **2377**, a connection terminal **2378**, a haptic module **2379**, a camera module **2380**, a power management module **2388**, a battery **2389**, a communication module **2390**, a subscriber identification module **2396**, or an antenna module **2397**. In some embodiments of the disclosure, at least one (e.g., the connection terminal **2378**) of the components may be omitted from or one or more other components to the user equipment **2301**. In some embodiments of the disclosure, some of the components (e.g., the sensor module **2376**, the camera module **2380**, or the antenna module **2397**) may be integrated into one component (e.g., the display module **2360**).

The processor **2320** may control at least one another component (e.g., a hardware or software component) of the user equipment **2301** connected to the processor **2320** by executing software (e.g., the program **2340**), and may perform various data processing or operations. According to an embodiment of the disclosure, the processor **2320** as at least a part of data processing or operations may store a command or data received from another component (e.g., the sensor module **2376** or the communication module **290**) in the volatile memory **2332**, process the command or data stored in the volatile memory **2332**, and store resulting data in the non-volatile memory **2334**. According to an embodiment of the disclosure, the processor **2320** may include a main processor **2321** (e.g., a CPU or an application processor) or an auxiliary processor **2323** (e.g., a GPU, an NPU, an image signal processor (ISP), a sensor hub processor, or a communication processor) capable of operating independently of or together with the main processor **2321**. For example, when the user equipment **2301** includes the main processor **2321** and the auxiliary processor **2323**, the auxiliary processor **2323** may use lower power than the main processor **2321** or may be configured to be specialized for a specific function. The auxiliary processor **2323** may be implemented separately from or as a part of the main processor **2321**.

The auxiliary processor **2323** may control at least some of functions or states related to at least one (e.g., the display module **2360**, the sensor module **2376**, or the communication module **2390**) of the components of the user equipment **2301**, in place of the main processor **2321** in an inactive (e.g., sleep) state of the main processor **2321** or together with the main processor **2321** in an active (e.g., application execution) state of the main processor **2321**. According to an embodiment of the disclosure, the auxiliary processor **2323** (e.g., the image signal processor or the communication processor) may be implemented as a part of another component (e.g., the camera module **2380** or the communication module **2390**) functionally related thereto. According to an embodiment of the disclosure, the auxiliary processor **2323** (e.g., the NPU) may include a hardware structure specialized for processing an AI model. The AI model may be generated through machine learning. Such learning may be performed by the user equipment **2301** that executes the AI model, or through a separate server (e.g., the server **2308**). Examples of a learning algorithm may include, but is not limited to, for example, supervised learning, unsupervised learning, semi-supervised learning, or reinforcement learning. The AI model may include a plurality of artificial neural network layers. The artificial neural network may be, but is not limited to, a deep neural network (DNN), a convolutional neural network (CNN), a recurrent neural network (RNN), a

restricted Boltzmann machine (RBM), a deep belief network (DBN), a bidirectional recurrent deep neural network (BRDNN), deep Q-network or a combination of two or more thereof. The AI model may additionally or alternatively include a software structure as well as the hardware structure.

The memory **2330** may store various data used by at least one component (e.g., the processor **2320** or the sensor module **2376**). Data may include input data or output data regarding, for example, software (e.g., the program **2340**) and a command related thereto. The memory **2330** may include the volatile memory **2332** or the non-volatile memory **2334**.

The program **2340** may be stored as software in the memory **2330**, and may include an operating system **2342**, middleware **2344**, or an application **2346**.

The input module **2350** may receive commands or data to be used in a component (e.g., the processor **2320**) of the user equipment **2301** from the outside (e.g., a user) of the user equipment **2301**. The input module **2350** may include, for example, a microphone, a mouse, a keyboard, a key (e.g., a button), or a digital pen (e.g., a stylus pen).

The audio output module **2355** may output an audio signal to the outside of the user equipment **2301**. The audio output module **2355** may include, for example, a speaker or a receiver. The speaker may be used for a general purpose such as multimedia reproduction or record play. The receiver may be used to receive an incoming call. According to an embodiment of the disclosure, the receiver may be implemented separately from or as a part of the speaker.

The display module **2360** may visually provide information to the outside (e.g., the user) of the user equipment **2301**. The display module **2360** may include, for example, a display, a hologram display device, or a projector, and a control circuit for controlling the corresponding device. According to an embodiment of the disclosure, the display module **2360** may include a touch sensor configured to detect a touch or a pressure sensor configured to measure a strength of a force generated by the touch.

The audio module **2370** may convert sound into an electrical signal or convert an electrical signal into sound. According to an embodiment of the disclosure, the audio module **2370** may obtain sound through the input module **2350** or output sound through an external electronic device (e.g., the electronic device **2302**, for example, a speaker or a headphone) directly or wirelessly connected to the audio output module **2355** or the user equipment **2301**.

The sensor module **2376** may sense an operating state (e.g., power or a temperature) of the user equipment **2301**, or an outer environmental state (e.g., a user state), and may generate an electrical signal or a data value corresponding to the sensed state. According to an embodiment of the disclosure, the sensor module **2376** may include, e.g., a gesture sensor, a gyro sensor, a pressure sensor, a magnetic sensor, an acceleration sensor, a grip sensor, a proximity sensor, a color sensor, an infrared (IR) sensor, a biometric sensor, a temperature sensor, a humidity sensor, or an illuminance sensor.

The interface **2377** may support one or more designated protocols that may be used in order for the user equipment **2301** (e.g., the electronic device **2302**) to be directly or wirelessly connected to the external electronic device (e.g., the electronic device **2302**). According to an embodiment of the disclosure, the interface **2377** may include, for example, a high-definition multimedia interface (HDMI), a universal serial bus (USB) interface, a secure digital (SD) card interface, or an audio interface.

The connection terminal **2378** may include a connector through which the user equipment **2301** may be physically connected to the external electronic device (e.g., the electronic device **2302**). According to an embodiment of the disclosure, the connection terminal **2378** may include, for example, an HDMI connector, a USB connector, an SD card connector, or an audio connector (e.g., a headphone connector).

The haptic module **2379** may convert the electrical signal into a mechanical stimulation (e.g., vibration or motion) or an electric stimulation that the user may sense through a tactile or motion sensation. According to an embodiment of the disclosure, the haptic module **2379** may include, for example, a motor, a piezoelectric element, or an electric stimulation device.

The camera module **2380** may capture a still image and a moving image. According to an embodiment of the disclosure, the camera module **2380** may include one or more lenses, image sensors, image signal processors, or flashes.

The power management module **2388** may manage the power supplied to the user equipment **2301**. According to an embodiment of the disclosure, the power management module **2388** may be implemented as at least a part of, for example, a power management integrated circuit (PMIC).

The battery **2389** may supply electric power to at least one component of the user equipment **2301**. According to an embodiment of the disclosure, the battery **2389** may include, for example, a non-rechargeable primary battery, a rechargeable secondary battery, or a fuel cell.

The communication module **2390** may support establishment of a direct (wired) communication channel and a wireless communication channel between the user equipment **2301** and an external electronic device (e.g., the electronic device **2302**, the electronic device **2304**, or the server **2308**), and execution of communication through the established communication channel. The communication module **2390** may operate independently of the processor **2320** (e.g., the application processor), and may include one or more communication processors that support direct (e.g., wired) communication or wireless communication. According to an embodiment of the disclosure, the communication module **2390** may include a wireless communication module **2392** (e.g., a cellular communication module, a short-range wireless communication module, or a global navigation satellite system (GNSS) communication module) or a wired communication module **2394** (e.g., a local area network (LAN) communication module or a power line communication (PLC) module). The communication module **2390** may communicate with the external electronic device **2304** through the first network **2398** (e.g., a short-range communication network such as Bluetooth, WiFi Direct or IrDA) or the second network **2399** (e.g., a long-range communication network such as a legacy cellular network, a 5th-Generation (5G) network, a next-generation communication network, Internet, or a computer network (e.g., a LAN or WAN)). Such various kinds of communication modules may be integrated as one component (e.g., a single chip) or may be implemented as a plurality of components (e.g., a plurality of chips) separately from one another. The wireless communication module **2392** may identify or authenticate the user equipment **2301** in a communication network such as the first network **2398** or the second network **2399** by using subscriber information (e.g., an international mobile subscriber identifier (IMSI)) stored in the subscriber identification module **2396**.

The wireless communication module **2392** may support a 5G network and next-generation communication technol-

ogy, e.g., new radio (NR) access technology, after a 4th-Generation (4G) network. The NR access technology may support high-speed transmission (enhanced mobile broadband (eMBB)) of high-volume data, terminal power minimization and access of multiple terminals (massive machine type communications (mMTC)), or high reliability and low latency (ultra-reliable and low-latency communications (URLLC)). The wireless communication module **2392** may support, for example, a high-frequency band (e.g., an mmWave band) to achieve a high data transmission rate. The wireless communication module **2392** may support various techniques for securing performance in the high-frequency band, e.g., beamforming, massive multiple-input and multiple-output (MIMO), full dimensional (FD)-MIMO, an array antenna, analog beamforming, or a large-scale antenna. The wireless communication module **2392** may support various requirements prescribed in the user equipment **2301**, an external electronic device (e.g., the electronic device **2304**), or a network system (e.g., the second network **2399**). According to an embodiment of the disclosure, the wireless communication module **2392** may support a peak data rate (e.g., 20 Gbps or more) for eMBB implementation, a loss coverage (e.g., 164 dB or less) for mMTC implementation, or user-plane latency (e.g., 0.5 ms or less or a round trip of 1 ms or less for each of a downlink (DL) and an uplink (UL) for URLLC implementation.

The antenna module **2397** may transmit or receive a signal or power to or from outside (e.g., an external electronic device). According to an embodiment of the disclosure, the antenna module **2397** may include an antenna including a conductor formed on a substrate (e.g., a printed circuit board (PCB)) or a radiator having a conductive pattern. According to an embodiment of the disclosure, the antenna module **2397** may include a plurality of antennas (e.g., an array antenna). In this case, at least one antenna suitable for a communication scheme used in a communication network such as the first network **2398** or the second network **2399** may be selected from, for example, the plurality of antennas, by the communication module **2390**. The signal or power may be transmitted or received between the communication module **2390** and the external electronic device through the selected at least one antenna. According to some embodiments of the disclosure, a component (e.g., a radio frequency integrated circuit (RFIC)) as well as the radiator may be additionally formed as a part of the antenna module **2397**.

According to various embodiments of the disclosure, the antenna module **2397** may form an mmWave antenna module. According to an embodiment of the disclosure, the mmWave antenna module may include a PCB, an RFIC disposed on a first surface (e.g., a bottom surface) of the PCB or adjacent to the first surface and capable of supporting a designated high-frequency band (e.g., an mmWave band), and a plurality of antennas (e.g., an array antenna) disposed on a second surface (e.g., a top surface or a side surface) of the PCB or adjacent to the second surface and capable of transmitting or receiving a signal in the designated high-frequency band.

At least some of the components may be connected to one another via a communication scheme between peripheral devices (e.g., a bus, general purpose input and output (GPIO), a serial peripheral interface (SPI), or a mobile industry processor interface (MIPI)) and may exchange signals (e.g., a command or data).

According to an embodiment of the disclosure, a command or data may be transmitted or received between the user equipment **2301** and the external electronic device **2304** through the server **2308** connected to the second network **2399**. Each of the external electronic devices **2302** and the **2304** may be of a type that is the same as or different from the user equipment **2301**. According to an embodiment of the disclosure, all or some of operations performed in the user equipment **2301** may be performed in one or more of the external electronic devices **2302**, **2304**, and **2308**. For example, when the user equipment **2301** has to perform a certain function or service automatically or in response to a request from the user or another device, the user equipment **2301** may request one or more external electronic devices to perform at least a part of the function or service, instead of performing the function or service. The one or more external electronic devices having received the request may execute at least a part of the requested function or service or an additional function or service related to the request, and transmit a result of execution to the user equipment **2301**. The user equipment **2301** may intactly or additionally process the result and provide a result of the processing as at least a part of a response to the request. To this end, for example, cloud computing, distributed computing, mobile edge computing (MEC), or client-server computing may be used. The user equipment **2301** may provide an ultra-low latency service by using the distributed computing or the MEC. In another embodiment of the disclosure, the external electronic device **1604** may include an Internet of Things (IoT) device. The server **2308** may be an intelligent server using machine learning and/or a neural network. According to an embodiment of the disclosure, the external electronic device **2304** or the server **2308** may be included in the second network **2399**. The user equipment **2301** may apply an intelligent service (e.g., a smart home, a smart city, a smart car, or health care) based on 5G communication technology and IoT-related technology.

A term "module" used in various embodiments of this document may include a unit implemented with hardware, software, or firmware, and may be mutually compatibly used with a term such as logic, a logic block, a part, or a circuit. The module may be a component configured as one piece or a minimum unit of the component, which performs one or more functions, or a part thereof. For example, according to an embodiment of the disclosure, the module may be implemented in the form of an application specific integrated circuit (ASIC).

Various embodiments of this document may be implemented as software (e.g., a program) including one or more instructions stored in a storage medium readable by a machine (e.g., the user equipment **130**, the first home appliance **120**, or the second home appliance **140**). For example, a processor of a machine (e.g., the user equipment **130**, the first home appliance **120**, or the second home appliance **140**) may call at least one of the one or more stored instructions from the storage medium and execute the instruction. This may enable the machine to operate to perform at least one function according to the at least one called instruction. The one or more instructions may include a code generated by a compiler or a code executable by an interpreter. A machine-readable storage medium may be provided in the form of a non-transitory storage medium. Wherein, the term "non-transitory" simply means that the storage medium is a tangible device, and does not include a signal (e.g., an electromagnetic wave), but this term does not differentiate between where data is semi-permanently stored in the storage medium and where the data is temporarily stored in the storage medium.

According to an embodiment of the disclosure, a method according to various embodiments of the disclosure may be

included and provided in a computer program product. The computer program product may be traded as a product between a seller and a buyer. The computer program product may be distributed in the form of a machine-readable storage medium (e.g., compact disc read only memory (CD-ROM)), or be distributed (e.g., downloaded or uploaded) online via an application store (e.g., Play Store™), or between two user devices (e.g., smart phones) directly. In the case of online distribution, at least a part of a computer program product may be at least temporarily stored in a machine-readable storage medium such as a memory of a server of a manufacturer, a server of an application store, or a relay server, or may be generated temporarily.

According to various embodiments of the disclosure, each of the above-described components (e.g., a module or program) may include a single entity or a plurality of entities, some of which may be separately disposed on other components. According to various embodiments of the disclosure, one or more of the above-described components or operations may be omitted or one or more other components or operations may be added. Alternatively or additionally, a plurality of components (e.g., modules or programs) may be integrated into one component. In this case, the integrated component may perform one or more functions of each of the plurality of components in a manner that is the same as or similar to a corresponding component of the plurality of components before the integration. According to various embodiments of the disclosure, operations performed by a module, a program, or other components may be executed sequentially, in parallel, repeatedly, or heuristically, or one or more of the operations may be executed in a different order or omitted, or one or more other operations may be added.

What is claimed is:

1. A method, performed by a server device, of controlling a home appliance, the method comprising:

receiving a distance measurement request signal from a user equipment;

transmitting, based on the received distance measurement request signal, an ultra-wideband (UWB) communication module activation signal to the user equipment and a second home appliance that includes a UWB antenna;

receiving, from the second home appliance, a location measurement value of the user equipment measured with respect to the second home appliance, the location measurement value being based on a UWB signal between the user equipment and the second home appliance;

determining location information about the user equipment, based on the location measurement value of the user equipment;

receiving, from a first home appliance that does not include a UWB antenna, information about the first home appliance; and

registering the first home appliance in the server device, based on the received information about the first home appliance and the location information about the user equipment.

2. The method of claim **1**, further comprising identifying, based on the received distance measurement request signal, the second home appliance as an appliance including the UWB antenna and being registered in the server device.

3. The method of claim **1**, wherein the distance measurement request signal is transmitted from the user equipment to the server device based on a selection of a quick response (QR) capturing menu or a near field communication (NFC) tagging menu on a device registration graphical user interface (GUI) displayed on the user equipment to register the first home appliance.

4. The method of claim **1**, wherein the receiving the location measurement value of the user equipment comprises receiving location information about the user equipment measured with respect to the second home appliance based on a location identification request signal, and

wherein the location identification request signal is a UWB signal transmitted from the user equipment to the second home appliance based on selection of a QR capturing button of the user equipment or performing NFC tagging with the user equipment.

5. The method of claim **1**, wherein the location measurement value comprises azimuth information about the user equipment, measured with respect to the second home appliance, elevation information about the user equipment, measured with respect to the second home appliance, and distance information between the second home appliance and the user equipment.

6. The method of claim **1**, wherein the determining the location information about the user equipment comprises determining the location information about the user equipment based on a comparison of information in a location information lookup table stored in the server device with the location measurement value of the user equipment.

7. The method of claim **1**, wherein the receiving the information about the first home appliance comprises receiving, based on access point (AP) information received by the first home appliance from the user equipment, the information about the first home appliance from the first home appliance through a Wireless Fidelity (WiFi) communication channel established between the user equipment and the first home appliance.

8. The method of claim **7**, wherein the information about the first home appliance comprises a product name of the first home appliance, a manufacturing date of the first home appliance, and state information about the first home appliance.

9. The method of claim **1**, further comprising:

receiving a control graphical user interface (GUI) request signal from the user equipment;

based on the received control GUI request signal, transmitting the UWB communication module activation signal to the user equipment and the second home appliance;

receiving, from the second home appliance, the location measurement value of the user equipment measured in response to the location identification request signal transmitted from the user equipment;

determining a third home appliance toward which the user equipment is oriented, based on the location measurement value of the user equipment; and

providing a GUI for controlling the determined third home appliance to the user equipment.

10. A server device comprising:

a communication interface configured to communicate with a user equipment and at least one home appliance;

a memory storing one or more instructions; and

at least one processor configured to execute the one or more instructions to:

receive, via the communication interface, a distance measurement request signal from a user equipment;

control the communication interface to transmit, based on the received distance measurement request signal, an ultra-wideband (UWB) communication module

activation signal to the user equipment and a second home appliance that includes a UWB antenna;

receive, from the second home appliance via the communication interface, a location measurement value of the user equipment measured with respect to the second home appliance, the location measurement value being based on a UWB signal between the user equipment and the second home appliance;

determine location information about the user equipment, based on the location measurement value of the user equipment;

receive, from a first home appliance that does not include a UWB antenna, information about the first home appliance; and

register the first home appliance in the server device, based on the received information about the first home appliance and the location information about the user equipment.

11. The server device of claim **10**, wherein the at least one processor is further configured to execute the one or more instructions to identify, based on the received distance measurement request signal, the second home appliance as an appliance including the UWB antenna and being registered in the server device.

12. The server device of claim **10**, wherein the distance measurement request signal is transmitted from the user equipment to the server device, based on a selection of a quick response (QR) capturing menu or a near field communication (NFC) tagging menu on a device registration graphical user interface (GUI) displayed on the user equipment to register the first home appliance.

13. The server device of claim **10**, wherein the at least one processor is further configured to execute the one or more instructions to receive the location measurement value of the user equipment by receiving location information about the user equipment measured with respect to the second home appliance based on a location identification request signal, and

wherein the location identification request signal is a UWB signal transmitted from the user equipment to the second home appliance based on selecting selection of a QR capturing button of the user equipment or performing NFC tagging with the user equipment.

14. The server device of claim **10**, wherein the location measurement value comprises azimuth information about the user equipment, measured with respect to the second home appliance, elevation information about the user equipment, measured with respect to the second home appliance, and distance information between the second home appliance and the user equipment.

15. The server device of claim **10**, wherein the at least one processor is further configured to execute the one or more instructions to determine the location information about the user equipment based on a comparison of information in a location information lookup table stored in the server device with the location measurement value of the user equipment.

16. The server device of claim **10**, wherein the at least one processor is further configured to execute the one or more instructions to receive the information about the first home appliance by receiving, based on access point (AP) information received by the first home appliance from the user equipment, the information about the first home appliance from the first home appliance through a Wireless Fidelity (WiFi) communication channel established between the user equipment and the first home appliance.

17. The server device of claim **16**, wherein the information about the first home appliance comprises a product name of the first home appliance, a manufacturing date of the first home appliance, and state information about the first home appliance.

18. The server device of claim **10**, wherein the at least one processor is further configured to execute the one or more instructions to:

receive, via the communication interface, a control graphical user interface (GUI) request signal from the user equipment;

control the communication interface to transmit the UWB communication module activation signal to the user equipment and the second home appliance, based on the received control GUI request signal;

receive, from the second home appliance via the communication interface, the location measurement value of the user equipment measured in response to a location identification request signal transmitted from the user equipment;

determine a third home appliance toward which the user equipment is oriented, based on the location measurement value of the user equipment; and

control the communication interface to provide a graphical user interface (GUI) for controlling the determined third home appliance to the user equipment.

19. A non-transitory computer-readable recording medium having recorded thereon a computer program that is executable by a computer to perform the method of claim **1**.

20. A method of controlling a user equipment, the method comprising:

receiving a user input to select a quick response (QR) capturing menu or a near field communication (NFC) tagging menu on a device registration graphical user interface (GUI) displayed on the user equipment;

transmitting a distance measurement request signal to a server device, based on the received user input;

transmitting a location identification request signal, to a second home appliance identified by the server device as registered and including a UWB antenna, based on a user of the user equipment selecting a QR capturing button of the user equipment or performing NFC tagging with the user equipment;

receiving a user input to input access point (AP) information in the device registration GUI displayed on the user equipment; and

transmitting the received AP information to a first home appliance identified by a QR capture or an NFC tag.

* * * * *