US010523258B2

(12) United States Patent
Hong et al.

(10) Patent No.: US 10,523,258 B2
(45) Date of Patent: Dec. 31, 2019

(54) **COMMUNICATION DEVICE TO PERFORM WIRELESS COMMUNICATION AND WIRELESS POWER TRANSFER, AND ELECTRODE DEVICE TO TRANSMIT AND RECEIVE ELECTRICAL SIGNAL FROM TARGET**

(71) Applicant: **Samsung Electronics Co., Ltd.**, Suwon-si (KR)

(72) Inventors: **Young Jun Hong**, Seoul (KR); **Jaechun Lee**, Seoul (KR); **Joonseong Kang**, Suwon-si (KR); **Wonseok Lee**, Yongin-si (KR); **Junyeub Suh**, Suwon-si (KR)

(73) Assignee: **Samsung Electronics Co., Ltd.**, Suwon-si (KR)

(*) Notice: Subject to any disclaimer, the term of this patent is extended or adjusted under 35 U.S.C. 154(b) by 0 days.

(21) Appl. No.: **15/898,316**

(22) Filed: **Feb. 16, 2018**

(65) **Prior Publication Data**

US 2018/0254793 A1 Sep. 6, 2018

(30) **Foreign Application Priority Data**

Mar. 6, 2017 (KR) 10-2017-0028377
Nov. 13, 2017 (KR) 10-2017-0150580

(51) **Int. Cl.**
H04B 1/40 (2015.01)
H02J 50/12 (2016.01)
(Continued)

(52) **U.S. Cl.**
CPC ***H04B 1/40*** (2013.01); ***A61N 1/0551*** (2013.01); ***A61N 1/0556*** (2013.01); ***H02J 50/12*** (2016.02);
(Continued)

(58) **Field of Classification Search**
CPC H04B 1/40; H04B 5/0031; H04B 5/0037; H02J 50/12; H02J 7/025
See application file for complete search history.

(56) **References Cited**

U.S. PATENT DOCUMENTS

9,242,105 B2 1/2016 Brockway et al.
9,409,023 B2 8/2016 Burdick et al.
(Continued)

FOREIGN PATENT DOCUMENTS

JP 10203059 * 8/1998
JP 2004-21484 A 1/2004
(Continued)

OTHER PUBLICATIONS

Extended European Search Report dated Jun. 8, 2018, in corresponding European Application No. 181598921 (7 pages, in English).
(Continued)

Primary Examiner — Nguyen T Vo
(74) *Attorney, Agent, or Firm* — NSIP Law

(57) **ABSTRACT**

A communication device includes: a coil disposed around a core area of the communication device; a processor disposed in the core area and configured to establish communication with an external device through the coil; and a discrete element disposed on the coil and connected to the processor through a via.

18 Claims, 27 Drawing Sheets

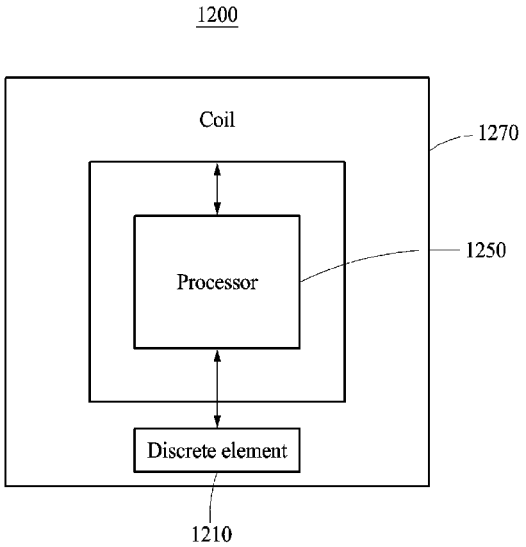

(51) **Int. Cl.**
A61N 1/05 (2006.01)
H04B 5/00 (2006.01)
H02J 7/02 (2016.01)

(52) **U.S. Cl.**
CPC ***H04B 5/0031*** (2013.01); ***H04B 5/0037*** (2013.01); *H02J 7/025* (2013.01)

(56) **References Cited**

U.S. PATENT DOCUMENTS

2003/0103015	A1*	6/2003	Oh	H01Q 1/246 343/867
2004/0124983	A1*	7/2004	Kuroda	G06K 19/0723 340/572.1
2011/0054583	A1	3/2011	Litt et al.	
2011/0112601	A1	5/2011	Meadows et al.	
2011/0224767	A1	9/2011	Inman	
2013/0310911	A1	11/2013	Tai et al.	
2013/0328723	A1*	12/2013	Rappaport	H04B 1/3838 342/372
2015/0170017	A1	6/2015	Murayama et al.	
2016/0067497	A1	3/2016	Levine et al.	
2016/0121115	A1	5/2016	Guillory et al.	
2016/0126744	A1	5/2016	Jeong et al.	
2016/0196230	A1*	7/2016	Pihet	G06F 13/4027 710/314
2017/0047636	A1	2/2017	Lee et al.	
2017/0290157	A1	10/2017	Sturcken et al.	

FOREIGN PATENT DOCUMENTS

JP	2008-146567	A	6/2008
JP	2014-514043	A	6/2014
KR	10-1183558	B1	9/2012
KR	10-2013-0045306	A	5/2013
KR	10-2013-0112233	A	10/2013
KR	10-2018-0055069	A	5/2018
WO	WO 2017/036895	A1	3/2017

OTHER PUBLICATIONS

Extended European Search Report dated Jul. 24, 2018, in corresponding European Application No. 181583048 (7 pages, in English).

Frieda Koopman, et al., "Pilot Study of Stimulation of the Cholinergic Anti-inflammatory Pathway with an Implantable Vagus Nerve Stimulation Device in Patients with Rheumatoid Arthritis," *Proceedings of the ACR/ARHP Annual Meeting,* Washington, DC, Nov. 2012 (1 page, in English).

* cited by examiner

FIG. 1

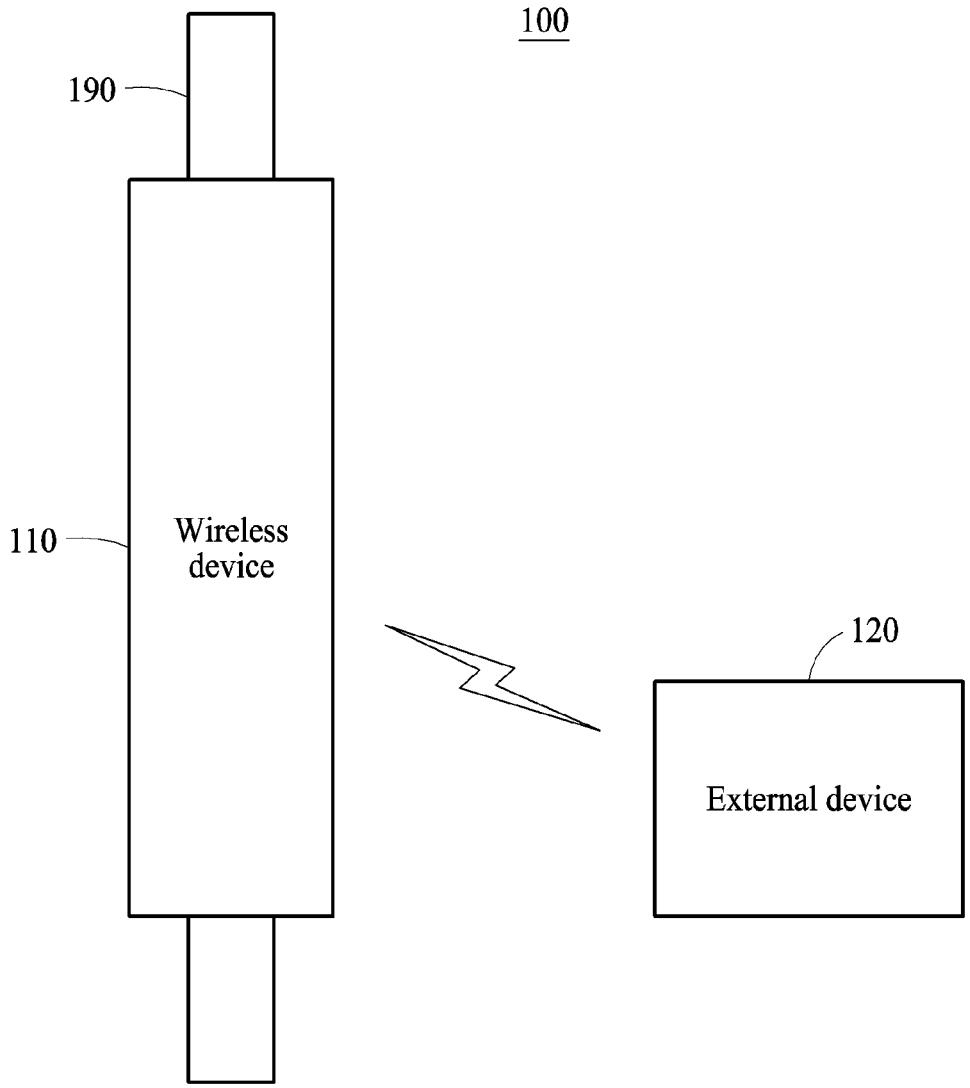

FIG. 2

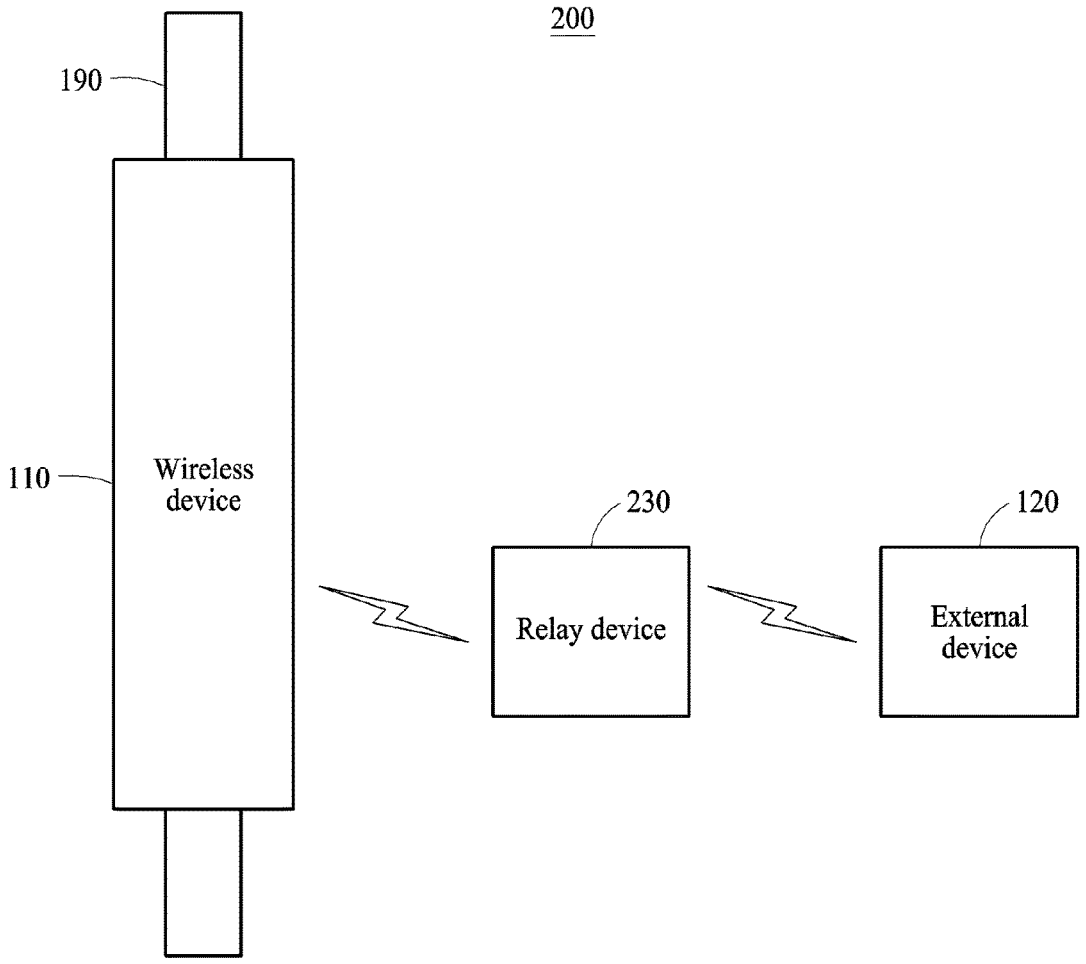
200
190
110
Wireless device
230
Relay device
120
External device

FIG. 3

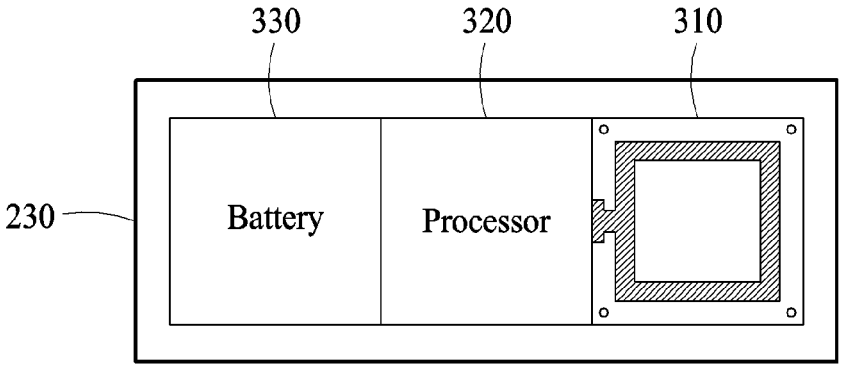

FIG. 4

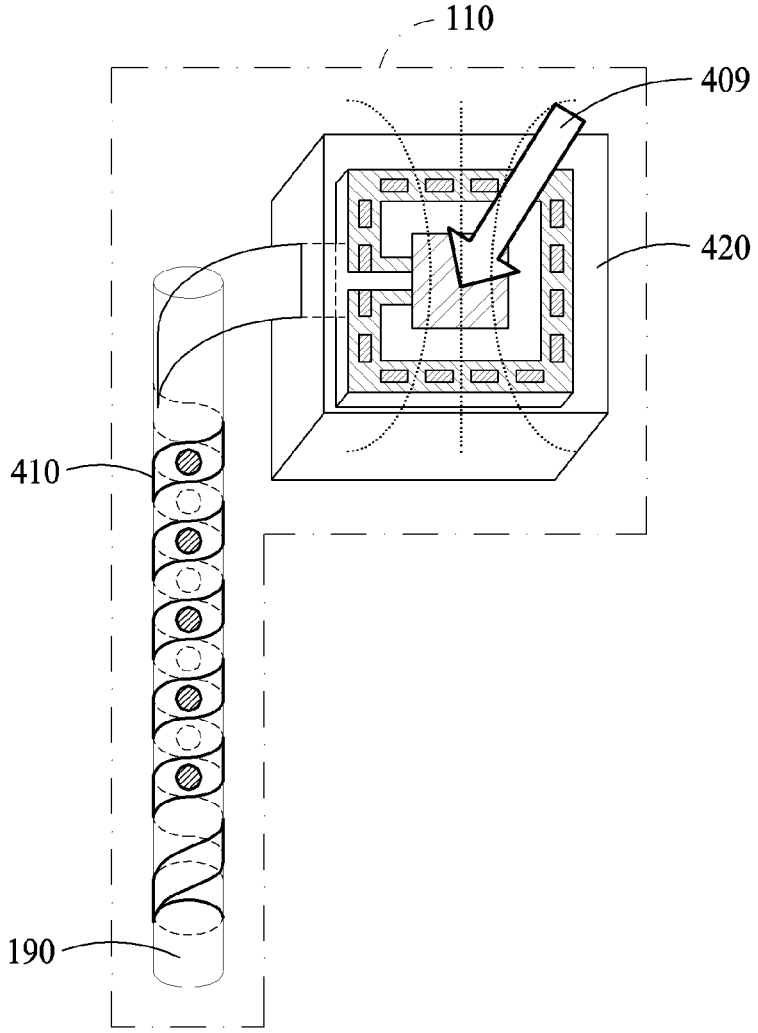

FIG. 5

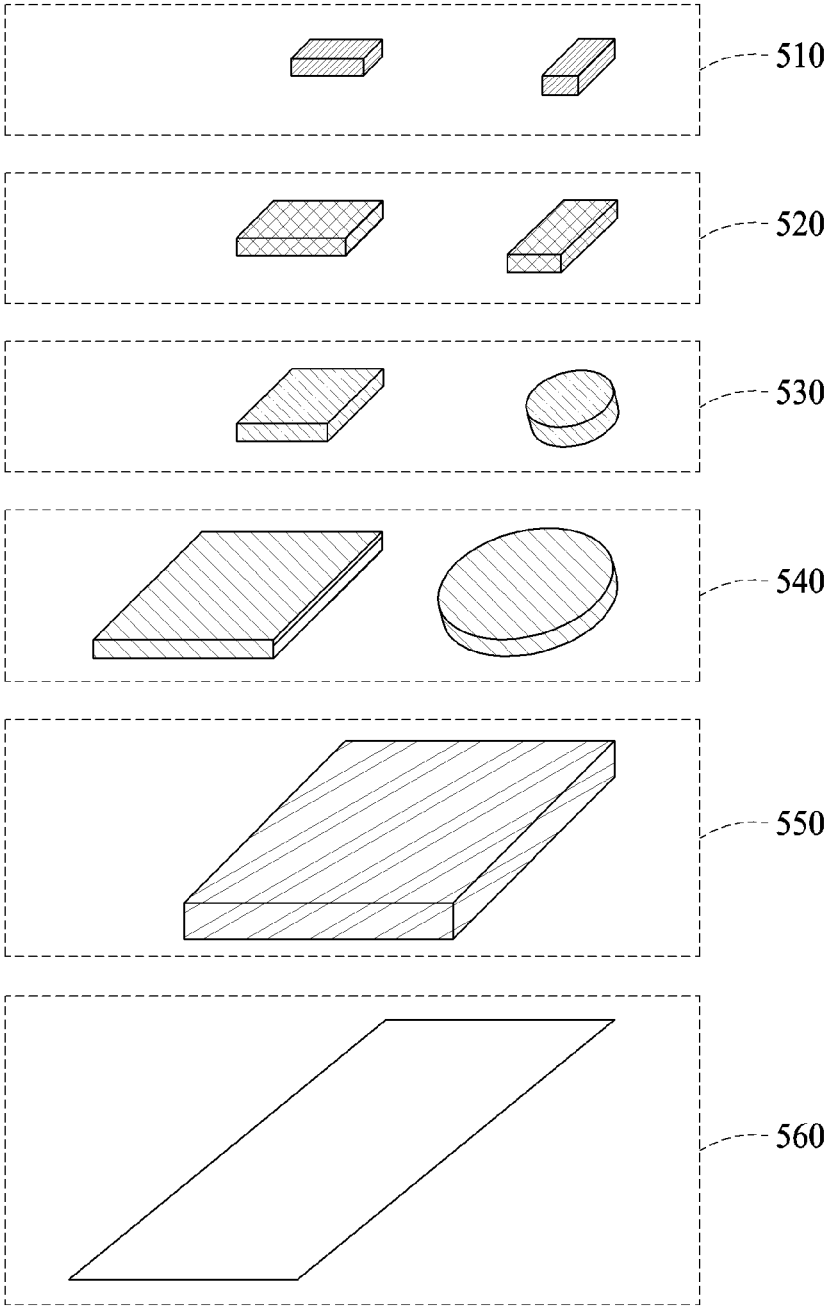

FIG. 6

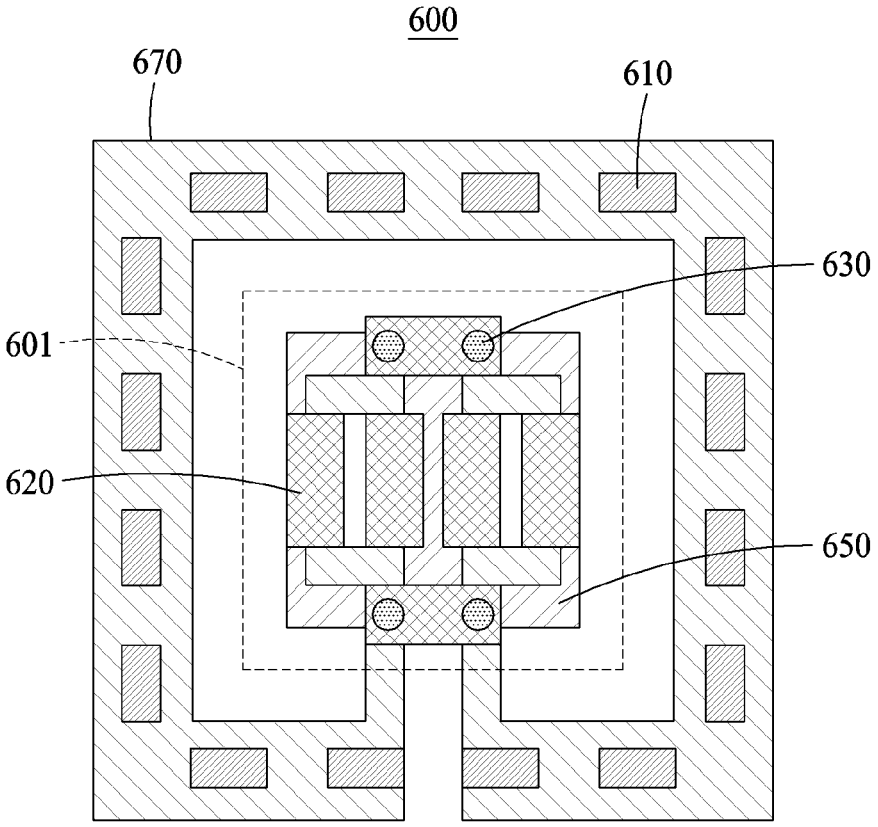

FIG. 7

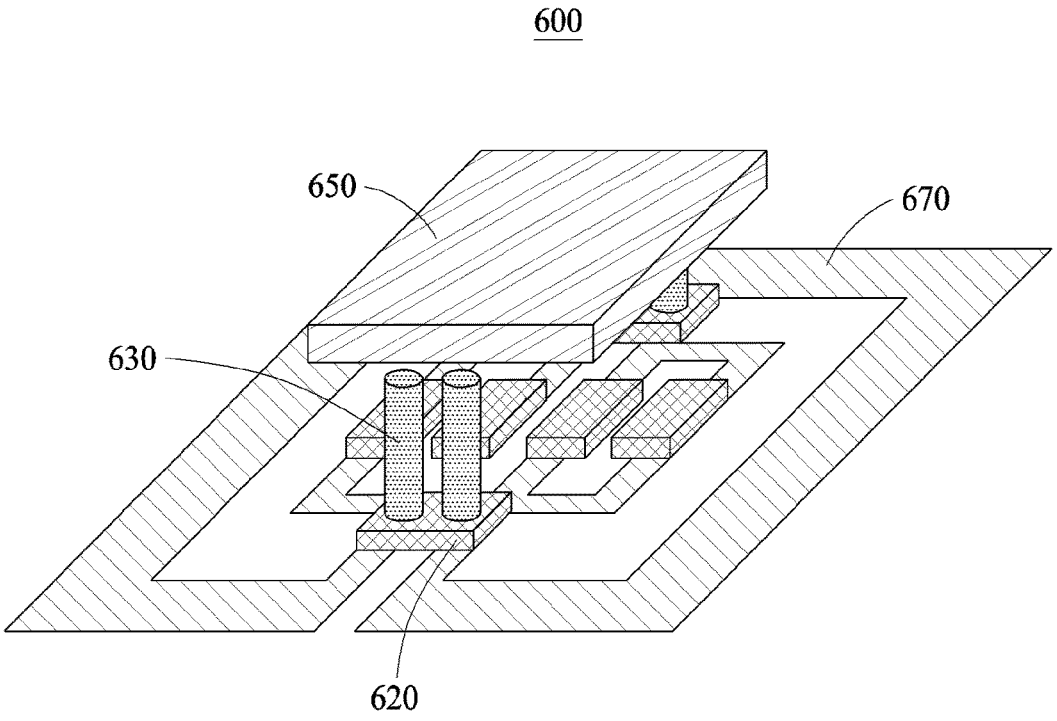

FIG. 8

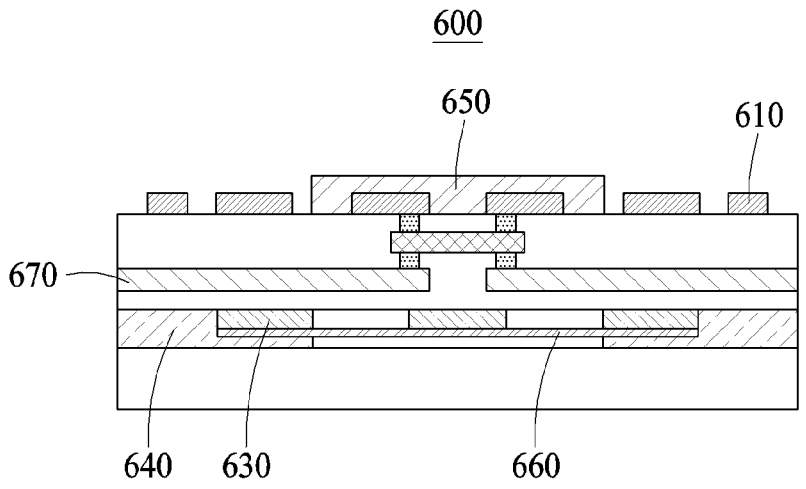

FIG. 9

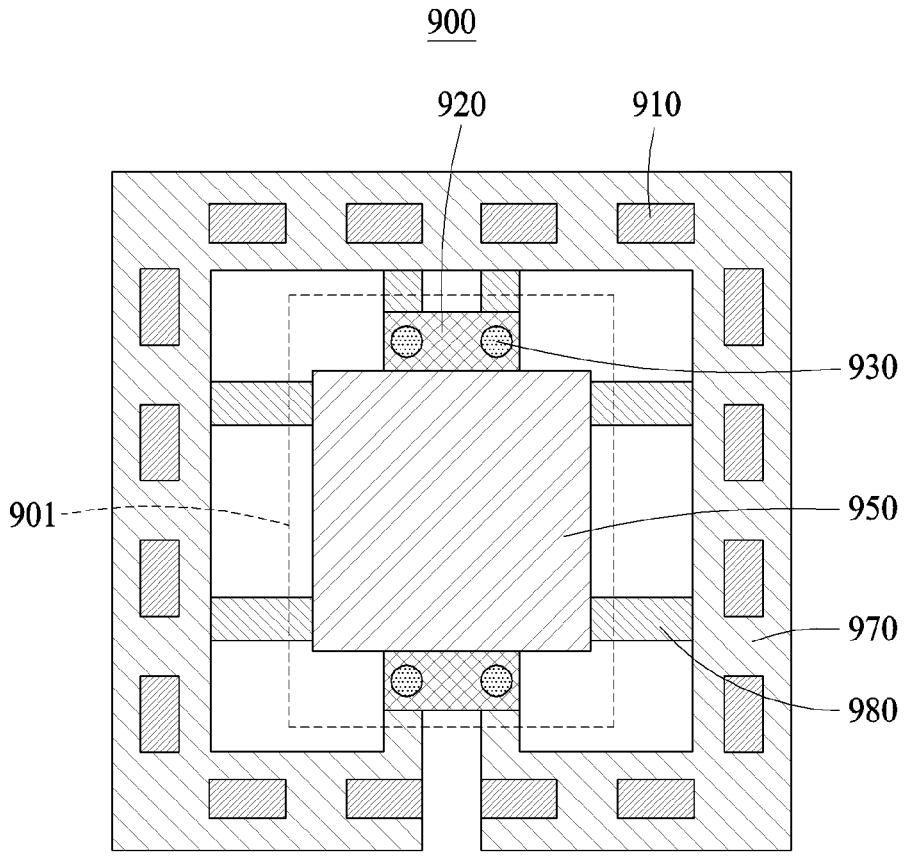

FIG. 10

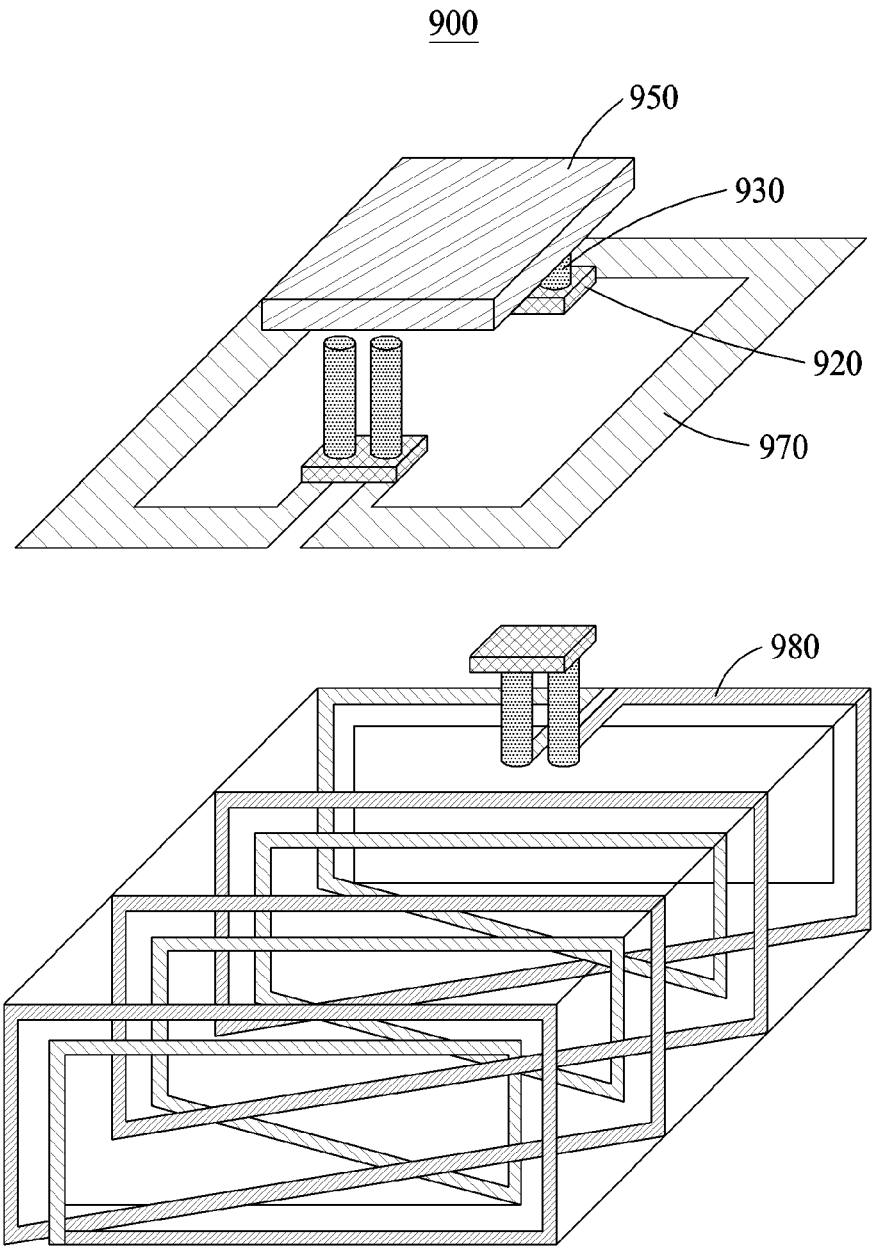

FIG. 11

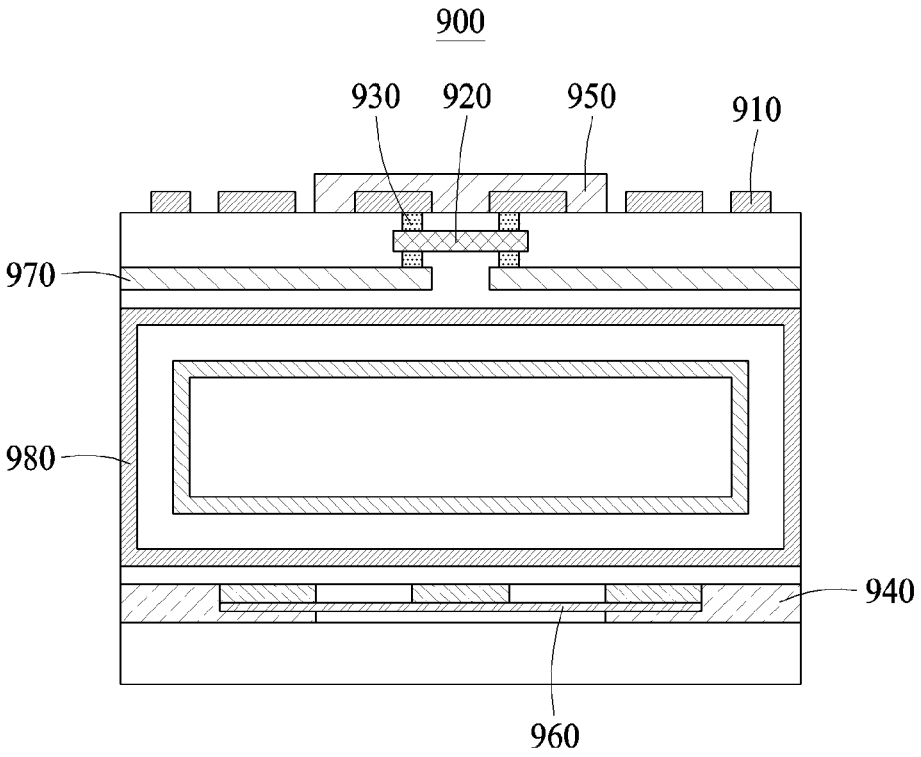

FIG. 12

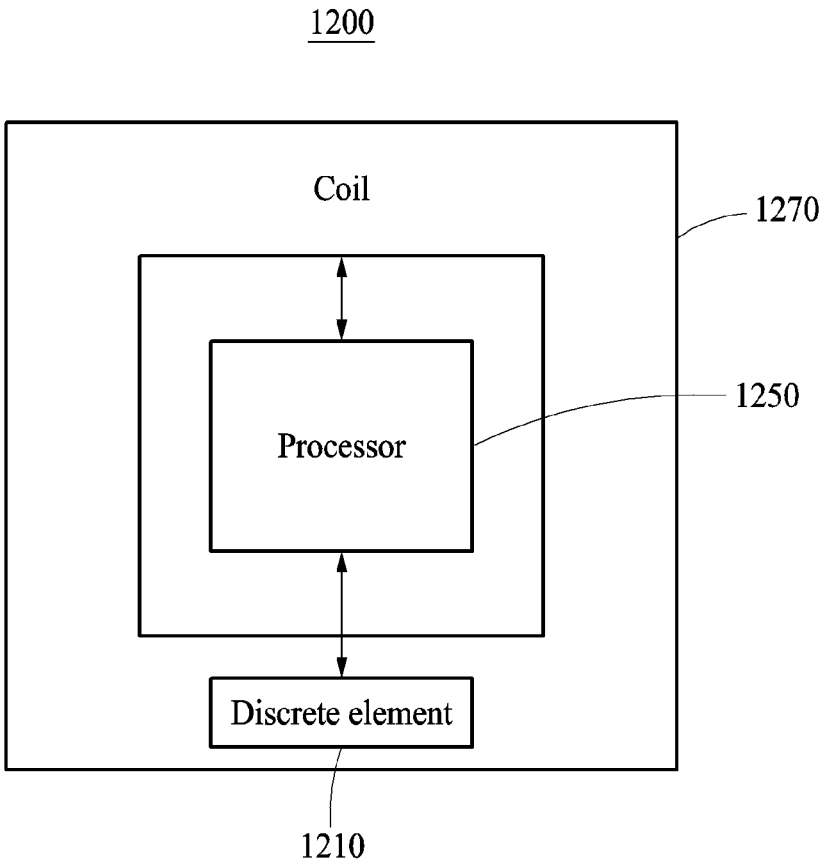

FIG. 13

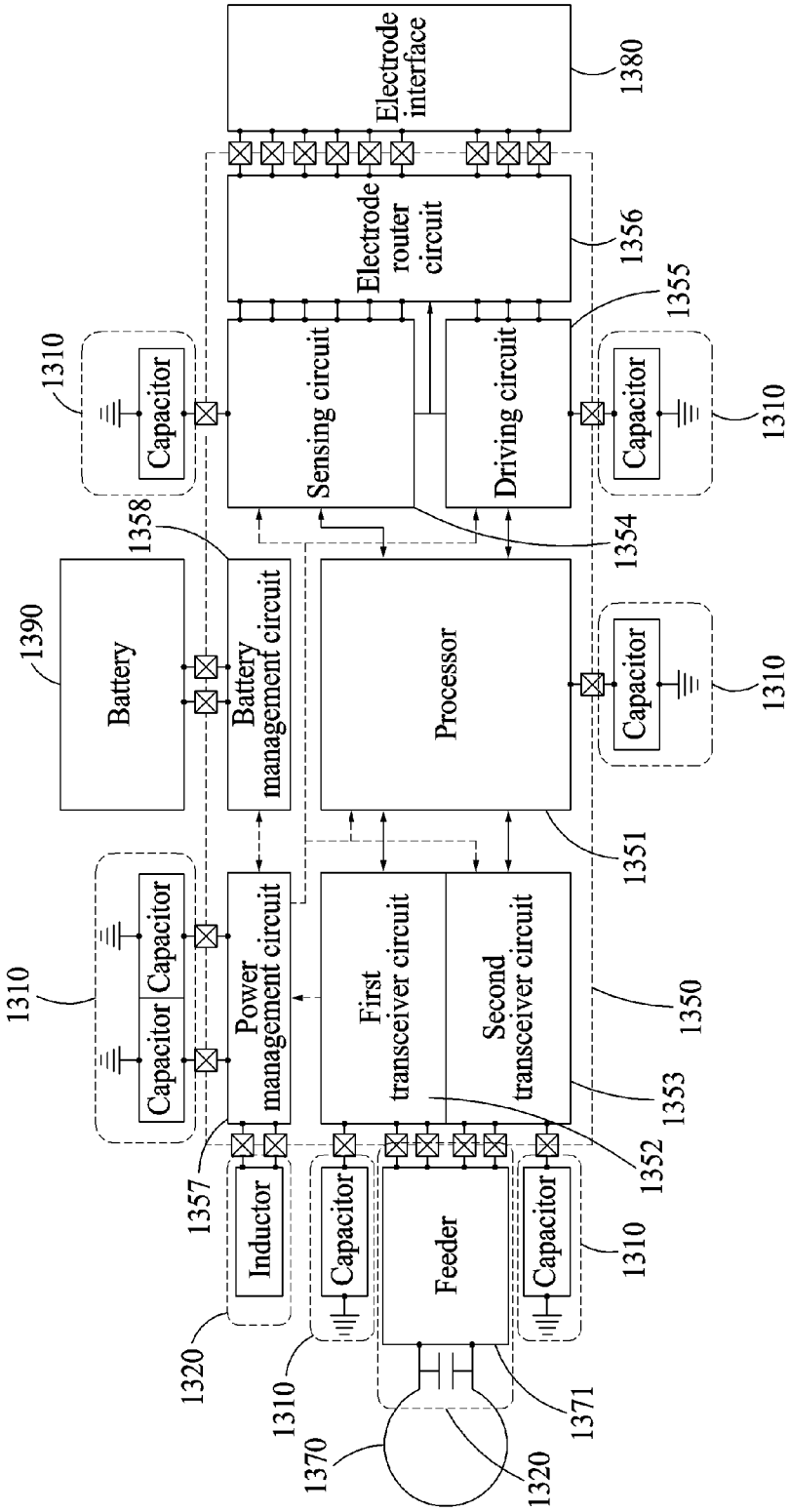
1300
Electrode interface
1380
Electrode router circuit
1356
1355
Sensing circuit
Driving circuit
1354
1358
Battery
1390
Battery management circuit
Processor
1351
Capacitor
1310
Power management circuit
First transceiver circuit
Second transceiver circuit
1350
1353
1352
1357
Inductor
1320
Feeder
1371
1370

FIG. 14

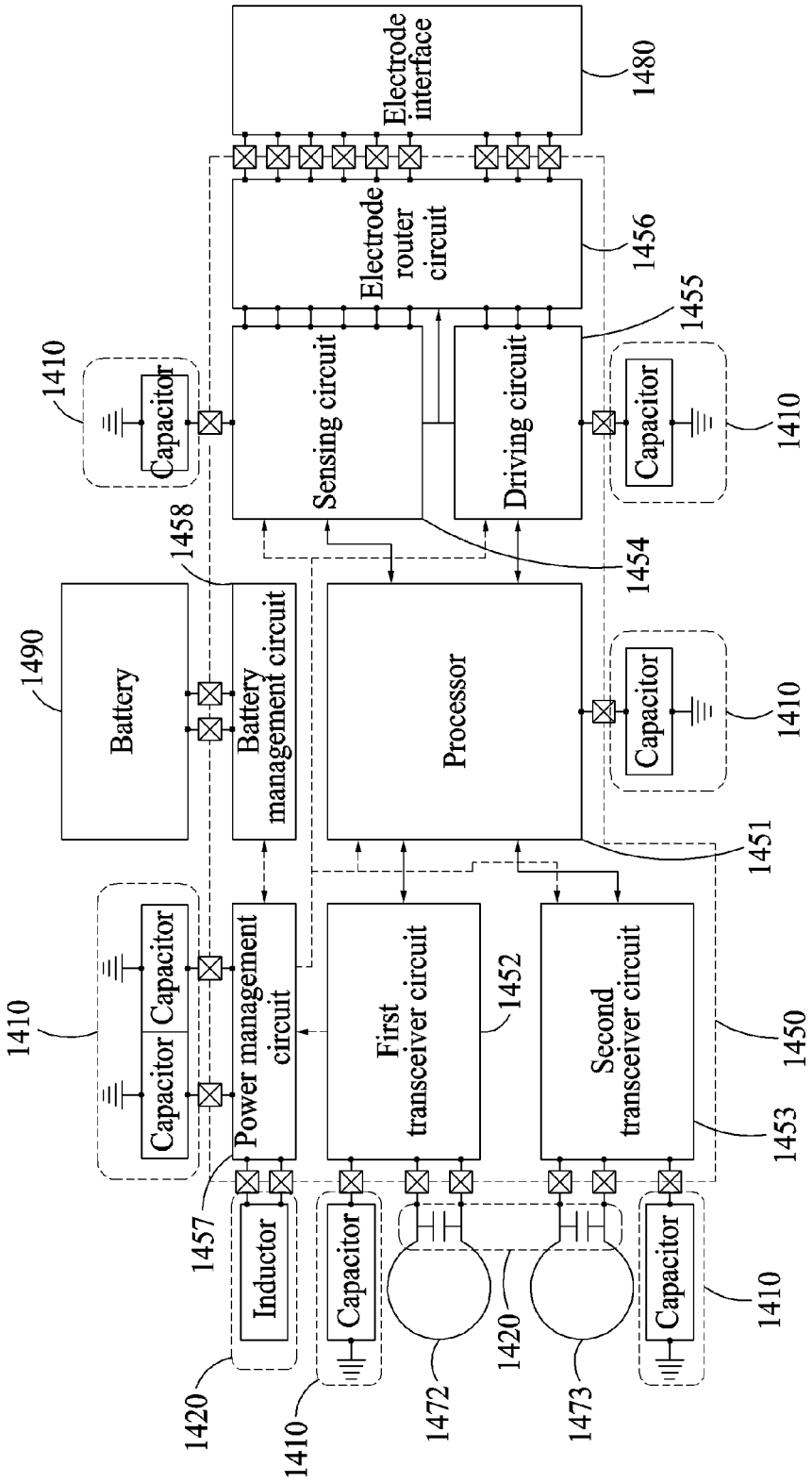
1400
Electrode interface
1480
Electrode router circuit
1456
1455
Sensing circuit
Driving circuit
1454
Capacitor
1410
1458
Battery
1490
Battery management circuit
Processor
1451
Capacitor
Capacitor
Power management circuit
1457
First transceiver circuit
1452
Second transceiver circuit
1453
1450
Inductor
1420
1472
1473

FIG. 15

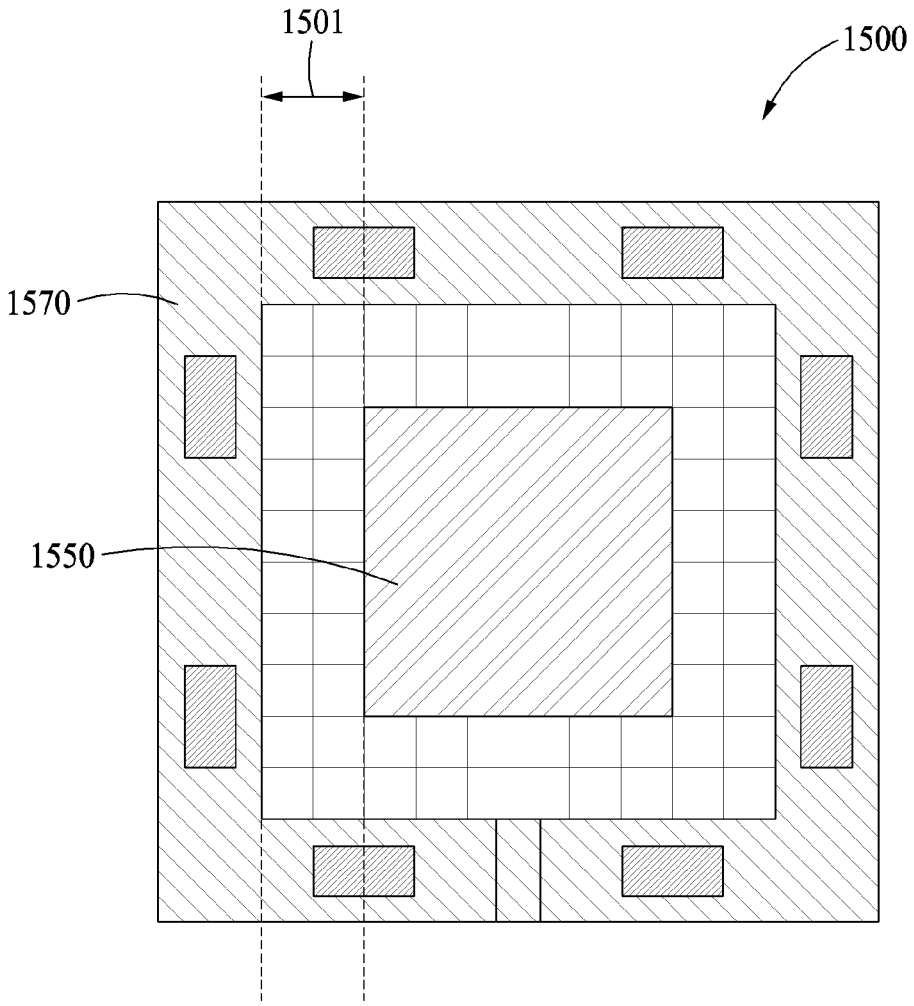

FIG. 16

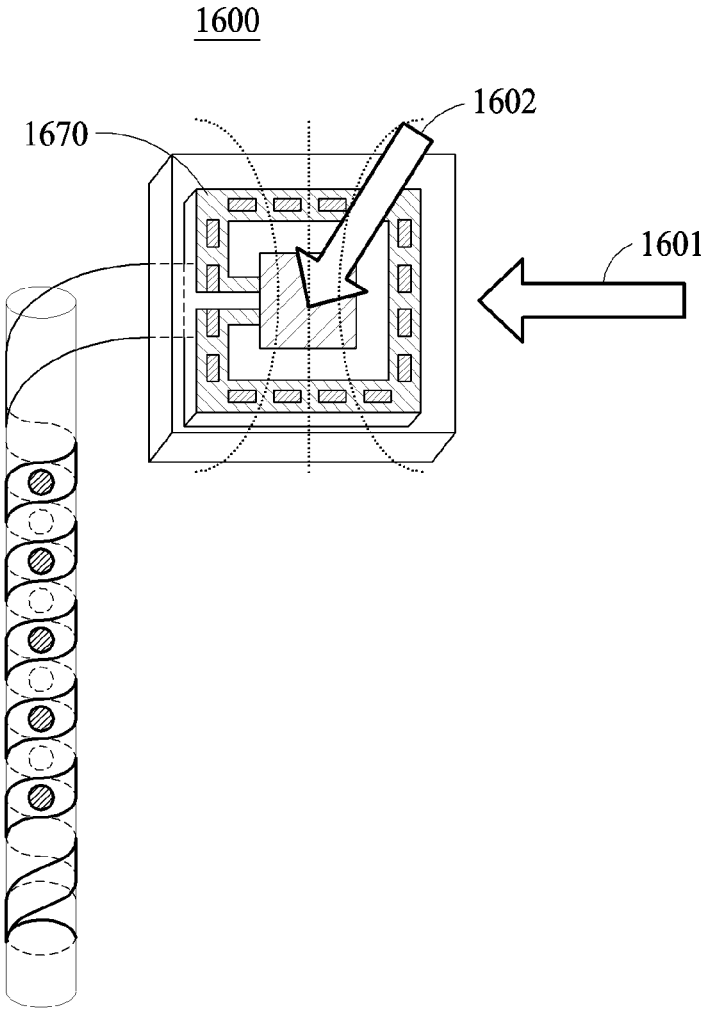

FIG. 17

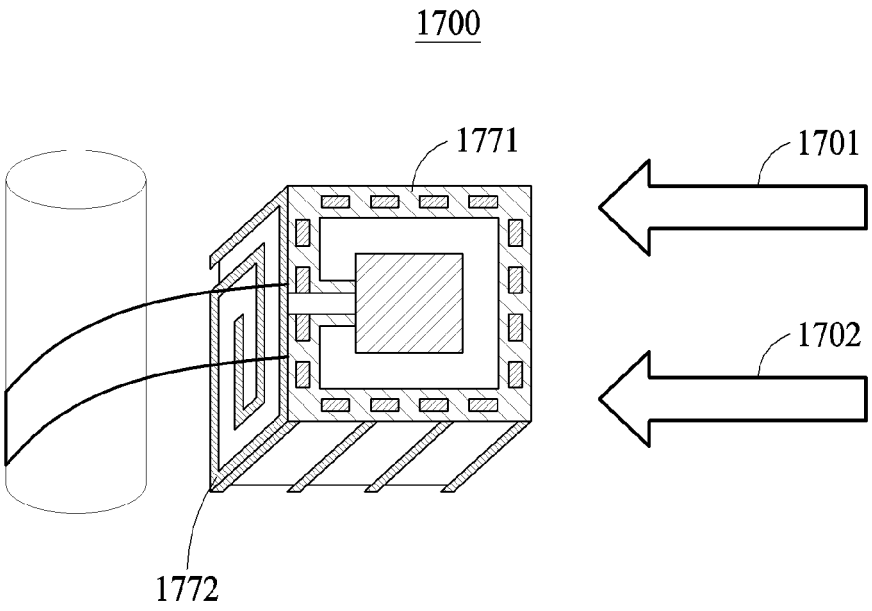

FIG. 18

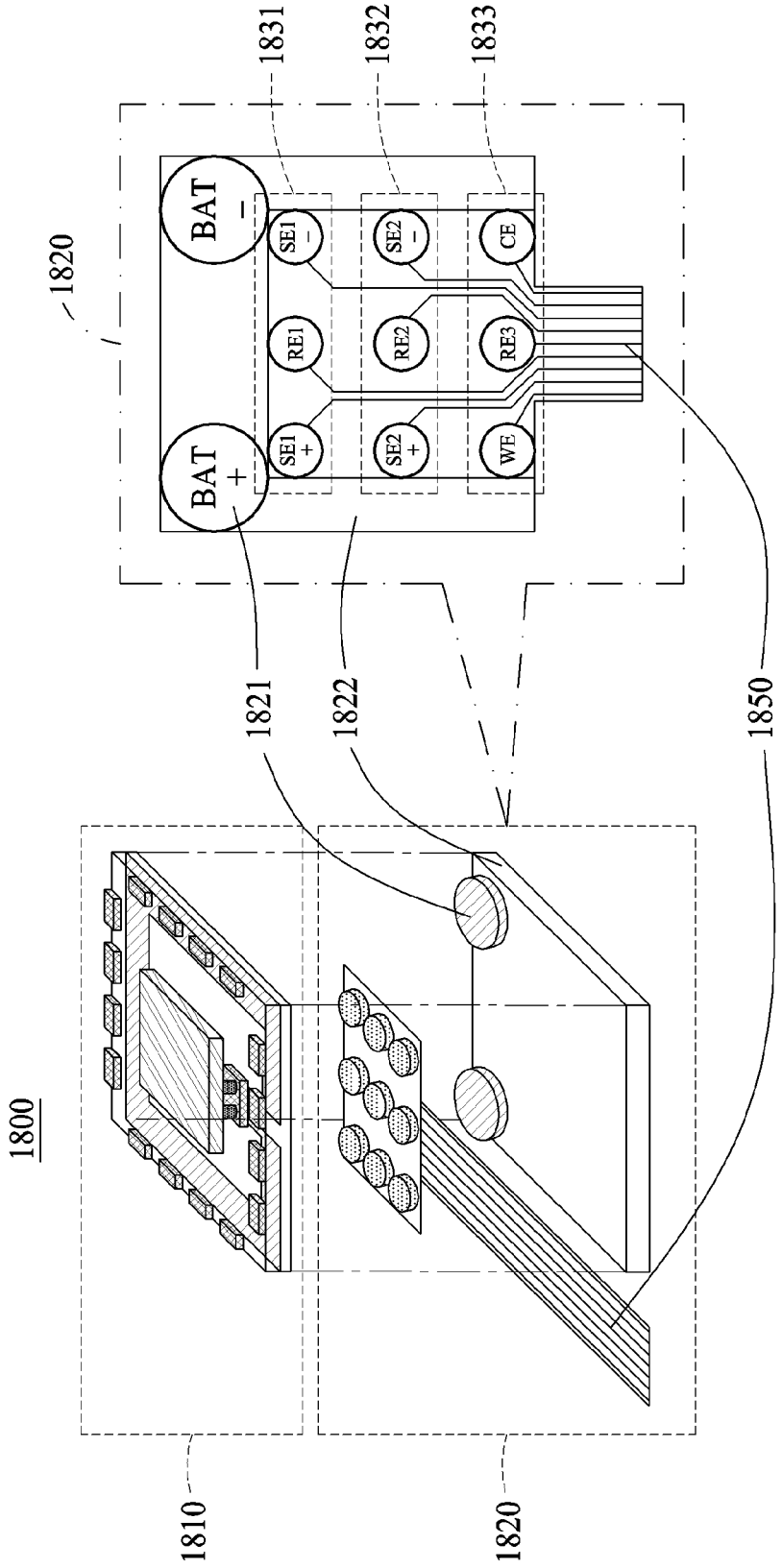
1831
1832
1833
1820
BAT −
BAT +
SE1 −
SE2 −
CE
RE1
RE2
RE3
SE1 +
SE2 +
WE
1821
1822
1850
1800
1810
1820

FIG. 19

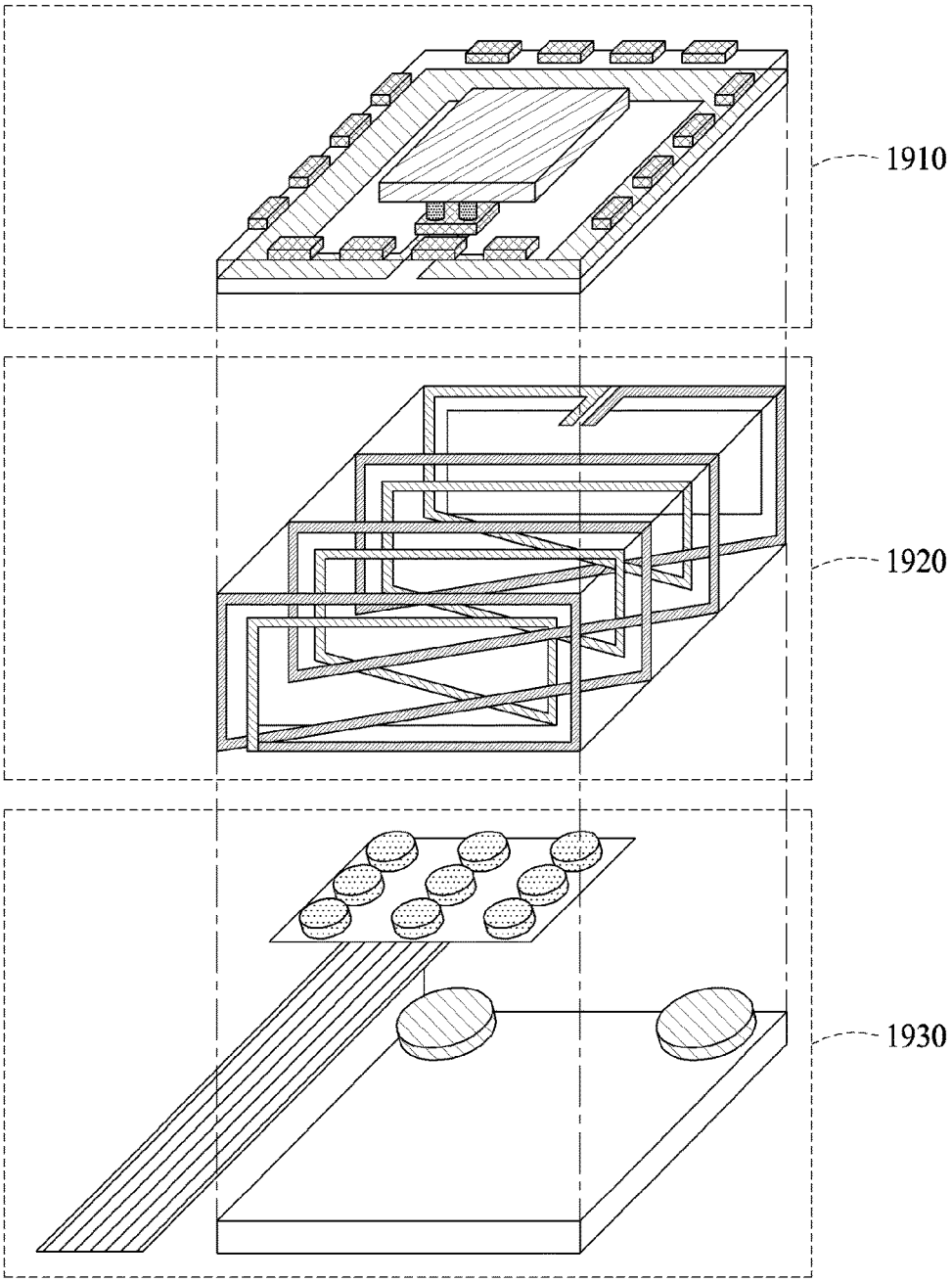

FIG. 20

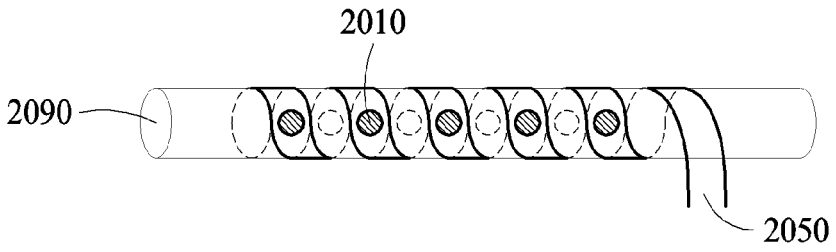

FIG. 21

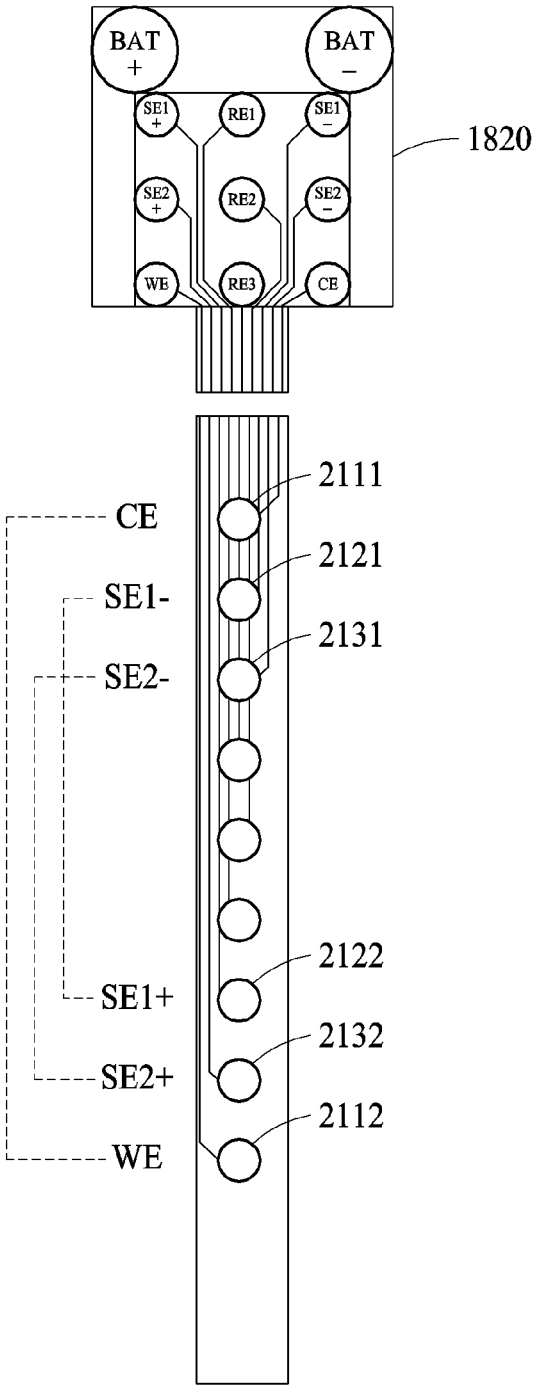
BAT +
BAT −
SE1 +
RE1
SE1 −
SE2 +
RE2
SE2 −
WE
RE3
CE
1820
2111
2121
2131
2122
2132
2112
CE
SE1-
SE2-
SE1+
SE2+
WE

FIG. 22

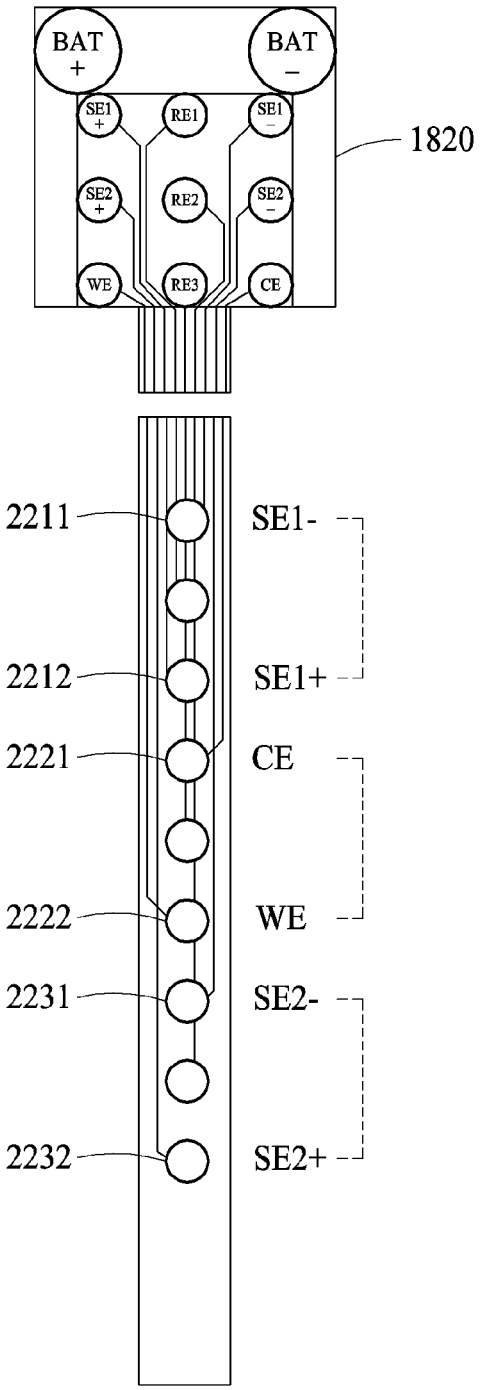
BAT +
BAT −
SE1 +
RE1
SE1 −
SE2 +
RE2
SE2 −
WE
RE3
CE
1820
2211
SE1-
2212
SE1+
2221
CE
2222
WE
2231
SE2-
2232
SE2+

FIG. 23

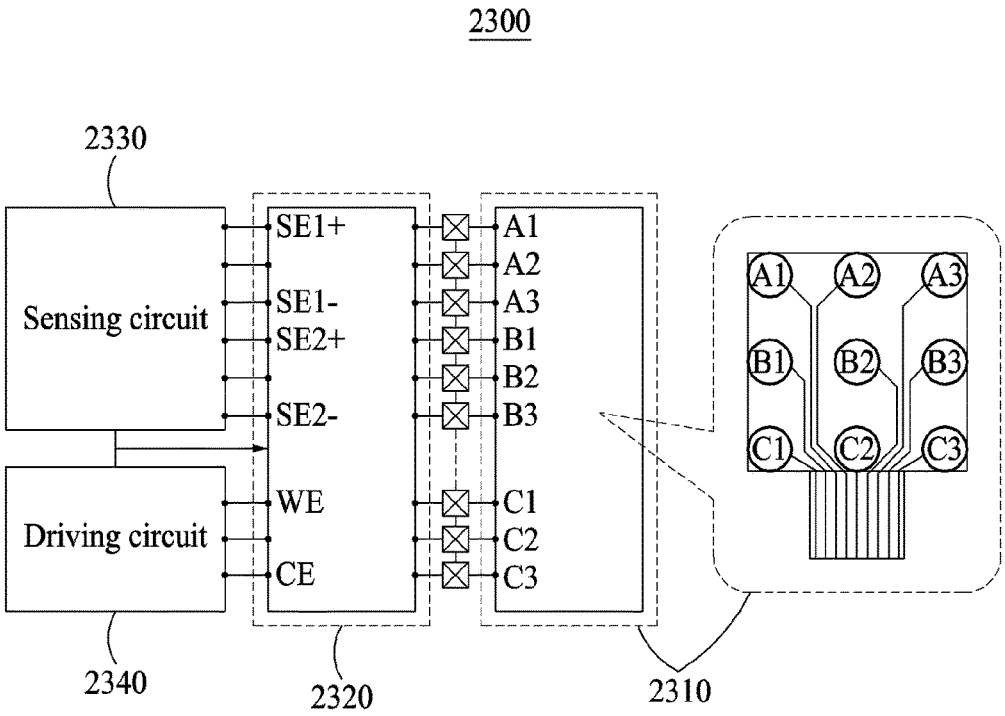
2300
2330
Sensing circuit
Driving circuit
SE1+
SE1-
SE2+
SE2-
WE
CE
A1
A2
A3
B1
B2
B3
C1
C2
C3
2340
2320
2310

FIG. 24

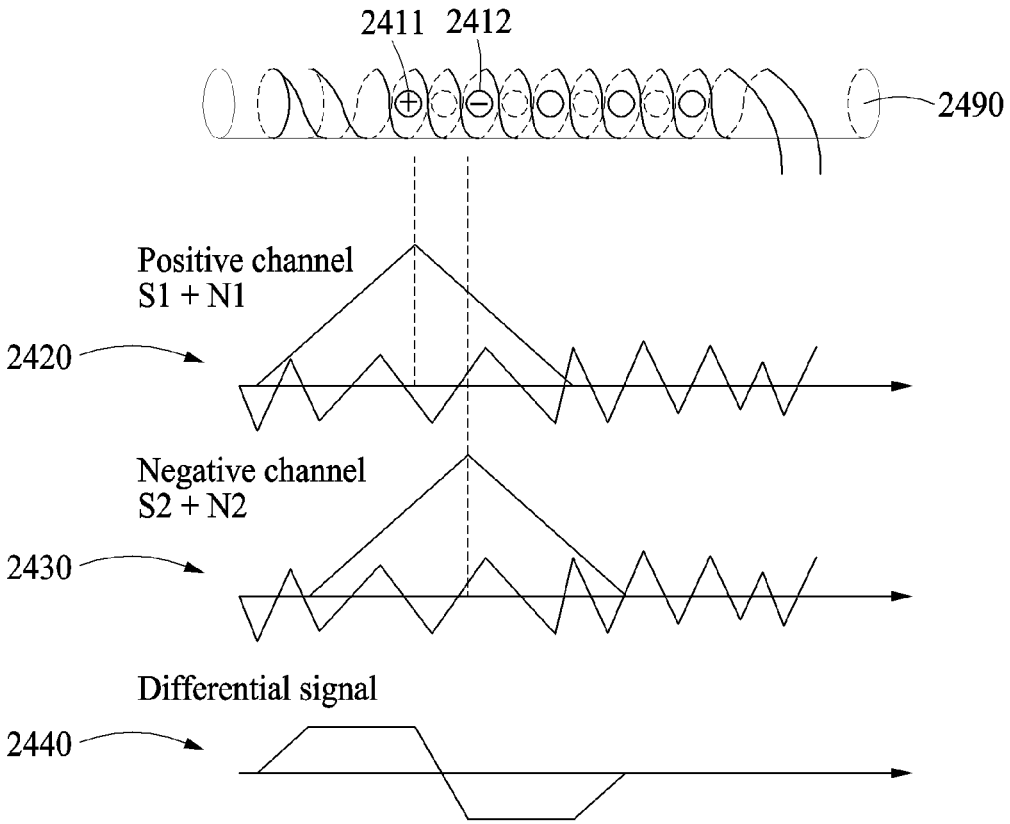
2411
2412
2490
Positive channel
S1 + N1
2420
Negative channel
S2 + N2
2430
Differential signal
2440

FIG. 25

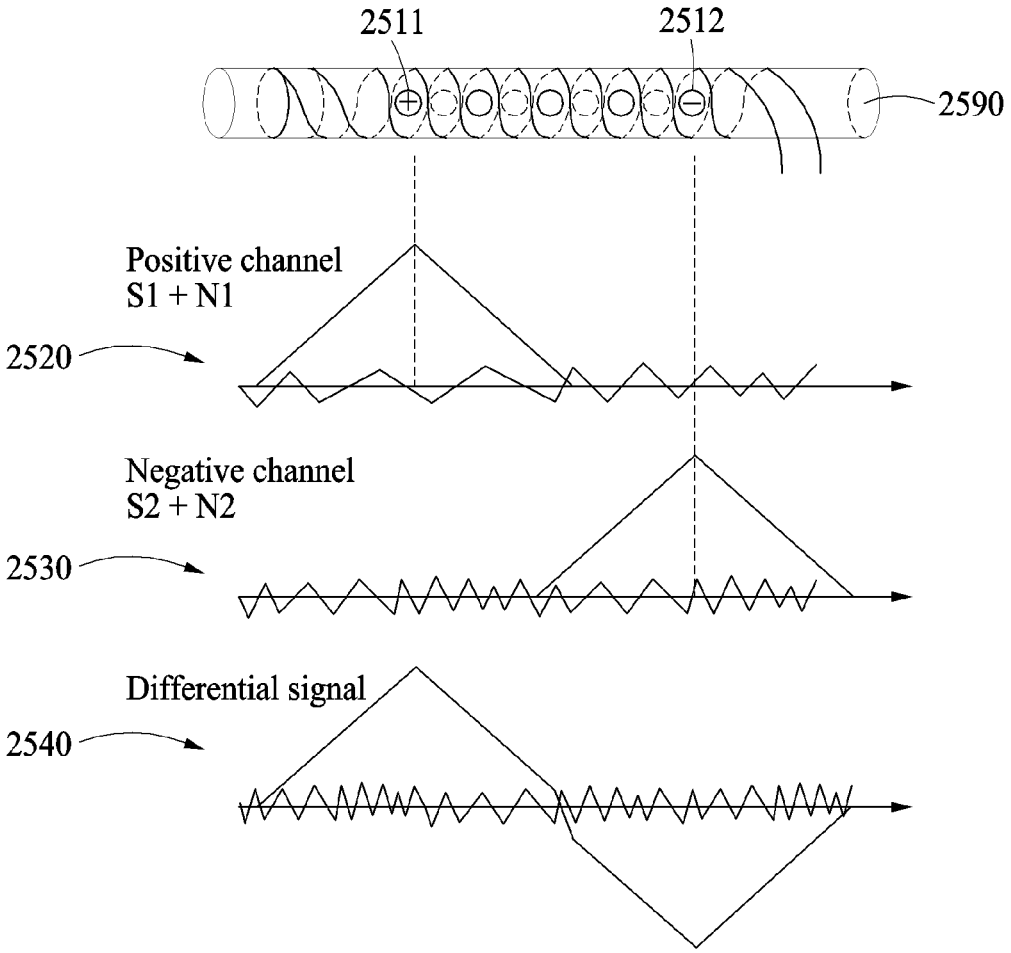
2511
2512
2590
Positive channel
S1 + N1
2520
Negative channel
S2 + N2
2530
Differential signal
2540

FIG. 26

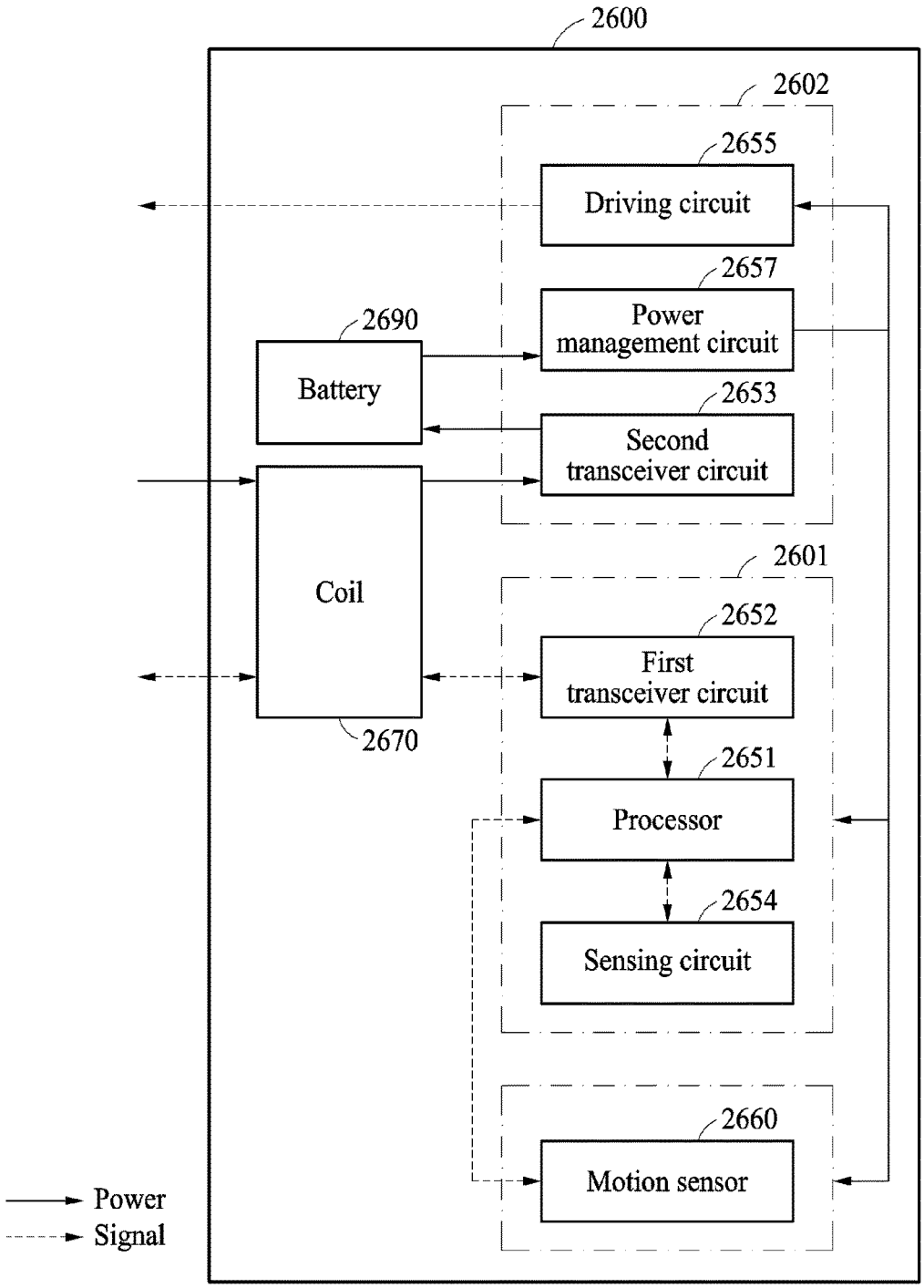
2600
2602
2655
Driving circuit
2657
Power management circuit
2690
Battery
2653
Second transceiver circuit
Coil
2670
2601
2652
First transceiver circuit
2651
Processor
2654
Sensing circuit
2660
Motion sensor
Power
Signal

FIG. 27

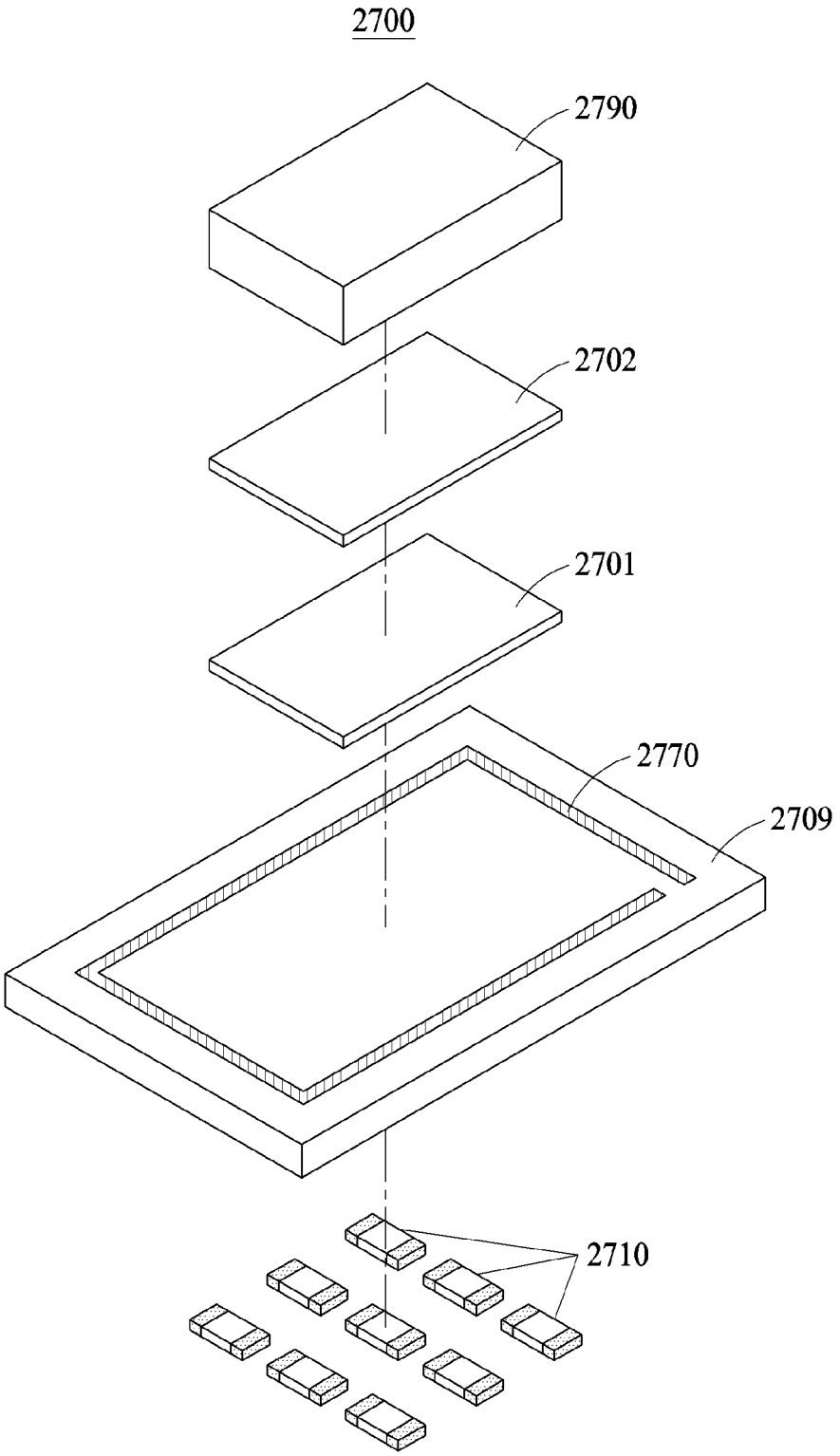

COMMUNICATION DEVICE TO PERFORM WIRELESS COMMUNICATION AND WIRELESS POWER TRANSFER, AND ELECTRODE DEVICE TO TRANSMIT AND RECEIVE ELECTRICAL SIGNAL FROM TARGET

CROSS-REFERENCE TO RELATED APPLICATIONS

This application claims the benefit under 35 USC § 119(a) of Korean Patent Application No. 10-2017-0028377 filed on Mar. 6, 2017, and Korean Patent Application No. 10-2017-0150580 filed on Nov. 13, 2017, in the Korean Intellectual Property Office, the entire disclosures of which are incorporated herein by reference for all purposes.

BACKGROUND

1. Field

The following description relates to a communication device and an electrode device.

2. Description of Related Art

Amid the development of communication technology and wireless power transfer technology, such as, for example, short-range wireless communication and Bluetooth, an electronic device, for example, a mobile communication device includes an antenna device that operates in various different frequency bands.

By using multiple antenna modules, transmission and reception of a wireless signal of various frequency bands and a wireless power transmission and reception may be enabled, and also a data transfer rate and a wireless power transfer rate in the transmission and reception may be improved. However, due to a limited space for the antenna modules, a size of the antenna modules to be mounted in a mobile communication device may be restricted.

SUMMARY

This Summary is provided to introduce a selection of concepts in a simplified form that are further described below in the Detailed Description. This Summary is not intended to identify key features or essential features of the claimed subject matter, nor is this Summary intended to be used as an aid in determining the scope of the claimed subject matter.

In one general aspect, a communication device includes: a coil disposed around a core area of the communication device; a processor disposed in the core area and configured to establish communication with an external device through the coil; and a discrete element disposed on the coil and connected to the processor through a via.

The processor may be disposed in a layer distinguished from the coil.

The discrete element may include a passive element configured to separate voltages of circuits in a chip including the processor.

The discrete element may include any one or any combination of any two or more of a capacitor, an inductor, and a resistor, which is connected to a chip including the processor through the via, and is arranged in an outer edge ring area of the coil in a layer distinguished from the coil.

The communication device may further include: a first transceiver circuit configured to transmit and receive, through the coil, a signal of a first bandwidth; and a second transceiver circuit configured to transmit and receive, through the coil, a signal of a second bandwidth that is different from the first bandwidth, wherein the first transceiver circuit and the second transceiver circuit are included in a chip including the processor.

The first transceiver circuit may be configured to operate at a voltage less than or equal to a first threshold voltage. The second transceiver circuit may be configured to operate at a voltage greater than or equal to a second threshold voltage that is greater than the first threshold voltage.

The communication device may further include: an electrode router circuit connected to electrodes, wherein the electrode router circuit is included in a chip including the processor.

The electrode router circuit may be configured to connect a first electrode among the electrodes to a sensing circuit, and connect a second electrode among the electrodes to a driving circuit. The sensing circuit may be configured to detect, through the first electrode, an electrical signal corresponding to a point to which the first electrode is attached. The driving circuit may be configured to apply, through the second electrode, an electrical signal to a point to which the second electrode is attached.

The sensing circuit may be configured to operate at a voltage less than or equal to a first threshold voltage. The driving circuit may be configured to operate at a voltage greater than or equal to a second threshold voltage that is greater than the first threshold voltage.

The coil may include a first partial coil configured to resonate in a first bandwidth, and a second partial coil configured to resonate in a second bandwidth that is different from the first bandwidth. The first partial coil and the second partial coil may share a loop.

The first partial coil may include a loop configured to generate a magnetic field in a first direction. The second partial coil may include a loop configured to generate an electric field in the first direction.

The communication device may further include: an embedded element disposed in a layer distinguished from a layer including the coil and a layer including the processor, and connected to the processor through the via; and a motion sensor configured to sense a motion of the communication device.

A chip including the processor may be spaced from the coil by a distance greater than or equal to a threshold distance.

The processor may be connected to electrodes arranged to cover a target, and may be configured to receive an electrical signal from or provide an electrical signal to some of the electrodes.

The processor may be configured to allocate a sensing channel to one or more electrodes among the electrodes, and allocate a stimulating channel to one or more remaining electrodes among the electrodes, based on the received electrical signal.

In another general aspect, an electrode device includes: a substrate formed of a flexible material and configured to cover a target; electrodes disposed on a face of the substrate that is configured to be in contact with the target in a longitudinal direction of the substrate; and an electrode router configured to connect the electrodes to a processor.

The substrate may helically cover the target.

The electrode router may be configured to transfer, to the processor, an electrical signal detected through a first electrode among the electrodes, and apply an electrical signal to a point of the target that is in contact with a second electrode, among the electrodes, that is different from the first electrode.

The processor may be configured to allocate a sensing channel of the electrode router to one or more electrodes among the electrodes, and allocate a stimulating channel of the electrode router to one or more remaining electrodes among the electrodes.

The electrodes may be classified based on channels, and electrodes corresponding to a same channel among the channels may be disposed to be adjacent to each other on the substrate.

The electrodes may be classified based on channels, and electrodes corresponding to a same channel among the channels may be arranged not to be adjacent to each other on the substrate.

The processor may be configured to allocate a sensing channel of the electrode router to one or more electrodes among the electrodes, and allocate a stimulating channel of the electrode router to one or more other electrodes among the electrodes, based on an electrical signal detected from the target.

The processor may be configured to allocate channels to the electrodes and arrange electrodes corresponding to a same channel among the channels to be adjacent to each other on the substrate, in response to common noise of a value greater than or equal to a threshold value being included in an electrical signal detected from the target.

The processor may be configured to allocate channels to the electrodes and arrange electrodes corresponding to a same channel among the channels not to be adjacent to each other on the substrate, in response to common noise of a value less than a threshold value being included in an electrical signal detected from the target.

In another general aspect, a wireless device includes: a substrate configured to cover a nerve; electrodes disposed on the substrate and configured to contact the nerve; an electrode router connected to the electrodes; and a processor configured to allocate the electrodes to channels based on a common noise in a signal from the nerve.

The channels may include a stimulating channel to stimulate the nerve and a sensing channel to sense the signal from the nerve.

The processor may be further configured to allocate first adjacent electrodes among the electrodes to the stimulating channel, in response to a value of the common noise being greater than or equal to a threshold value, and allocate second adjacent electrodes among the electrodes to the sensing channel, in response to the value of the common noise being greater than or equal to the threshold value.

The processor may be further configured to allocate first non-adjacent electrodes among the electrodes to the stimulating channel, in response to a value of the common noise being less than a threshold value, and allocate second non-adjacent electrodes among the electrodes to the sensing channel, in response to the value of the common noise being less than the threshold value.

Other features and aspects will be apparent from the following detailed description, the drawings, and the claims.

BRIEF DESCRIPTION OF THE DRAWINGS

FIGS. **1** and **2** are diagrams illustrating examples of a wireless system.

FIG. **3** is a diagram illustrating an example of a relay device.

FIG. **4** is a diagram illustrating an example of a wireless device.

FIG. **5** is a diagram illustrating examples of elements included in a wireless device.

FIGS. **6** through **8** are diagrams illustrating an example of a structure of a communication device.

FIGS. **9** through **11** are diagrams illustrating another example of a structure of a communication device.

FIGS. **12** through **14** are diagrams illustrating example configurations of communication devices.

FIG. **15** is a diagram illustrating an example of a distance between a coil and a chip of a communication device.

FIGS. **16** and **17** are diagrams illustrating examples of structures of coils communication devices.

FIGS. **18** and **19** are diagrams illustrating examples of a communication device and an example of an electrode device.

FIG. **20** is a diagram illustrating an example of an arrangement of electrodes of an electrode device.

FIGS. **21** and **22** are diagrams illustrating examples of an arrangement of electrode channels of an electrode device.

FIG. **23** is a diagram illustrating an example of a dynamic allocation of electrode channels of an electrode device.

FIGS. **24** and **25** are diagrams illustrating examples of a differential signal based on an allocation of electrode channels.

FIGS. **26** and **27** are diagrams illustrating another example of a configuration of a communication device.

Throughout the drawings and the detailed description, unless otherwise described or provided, the same drawing reference numerals will be understood to refer to the same elements, features, and structures. The drawings may not be to scale, and the relative size, proportions, and depiction of elements in the drawings may be exaggerated for clarity, illustration, and convenience.

DETAILED DESCRIPTION

The following detailed description is provided to assist the reader in gaining a comprehensive understanding of the methods, apparatuses, and/or systems described herein. However, various changes, modifications, and equivalents of the methods, apparatuses, and/or systems described herein will be apparent after an understanding of the disclosure of this application. For example, the sequences of operations described herein are merely examples, and are not limited to those set forth herein, but may be changed as will be apparent after an understanding of the disclosure of this application, with the exception of operations necessarily occurring in a certain order. Also, descriptions of features that are known in the art may be omitted for increased clarity and conciseness.

The features described herein may be embodied in different forms, and are not to be construed as being limited to the examples described herein. Rather, the examples described herein have been provided merely to illustrate some of the many possible ways of implementing the methods, apparatuses, and/or systems described herein that will be apparent after an understanding of the disclosure of this application.

Throughout the specification, when an element, such as a layer, region, or substrate, is described as being "on," "connected to," or "coupled to" another element, it may be directly "on," "connected to," or "coupled to" the other element, or there may be one or more other elements intervening therebetween. In contrast, when an element is described as being "directly on," "directly connected to," or "directly coupled to" another element, there can be no other elements intervening therebetween.

As used herein, the term "and/or" includes any one and any combination of any two or more of the associated listed items.

Although terms such as "first," "second," and "third" may be used herein to describe various members, components, regions, layers, or sections, these members, components, regions, layers, or sections are not to be limited by these terms. Rather, these terms are only used to distinguish one member, component, region, layer, or section from another member, component, region, layer, or section. Thus, a first member, component, region, layer, or section referred to in examples described herein may also be referred to as a second member, component, region, layer, or section without departing from the teachings of the examples.

Spatially relative terms such as "above," "upper," "below," and "lower" may be used herein for ease of description to describe one element's relationship to another element as shown in the figures. Such spatially relative terms are intended to encompass different orientations of the device in use or operation in addition to the orientation depicted in the figures. For example, if the device in the figures is turned over, an element described as being "above" or "upper" relative to another element will then be "below" or "lower" relative to the other element. Thus, the term "above" encompasses both the above and below orientations depending on the spatial orientation of the device. The device may also be oriented in other ways (for example, rotated 90 degrees or at other orientations), and the spatially relative terms used herein are to be interpreted accordingly.

The terminology used herein is for describing various examples only, and is not to be used to limit the disclosure. The articles "a," "an," and "the" are intended to include the plural forms as well, unless the context clearly indicates otherwise. The terms "comprises," "includes," and "has" specify the presence of stated features, numbers, operations, members, elements, and/or combinations thereof, but do not preclude the presence or addition of one or more other features, numbers, operations, members, elements, and/or combinations thereof.

Unless otherwise defined, all terms, including technical and scientific terms, used herein have the same meaning as commonly understood by one of ordinary skill in the art to which this disclosure pertains based on an understanding of the present disclosure. Terms, such as those defined in commonly used dictionaries, are to be interpreted as having a meaning that is consistent with their meaning in the context of the relevant art and the present disclosure, and are not to be interpreted in an idealized or overly formal sense unless expressly so defined herein.

The features of the examples described herein may be combined in various ways as will be apparent after an understanding of the disclosure of this application. Further, although the examples described herein have a variety of configurations, other configurations are possible as will be apparent after an understanding of the disclosure of this application.

FIGS. **1** and **2** are diagrams illustrating examples of wireless systems **100** and **200**, respectively.

Referring to FIG. **1**, the wireless system **100** includes a wireless device **110** and an external device **120**. Referring to FIG. **2**, the wireless system **200** further includes a relay device **230**.

The wireless device **110** performs wireless communication with the external device **120**. The wireless device **110** establishes direct communication with the external device **120**, or establishes communication with the external device **120** through the relay device **230**. The wireless device **110** is configured to cover a target **190**, and applies an electrical signal to the target **190** or detects an electrical signal from the target **190**. The wireless device **110** transfers a signal detected from the target **190** to the external device **120**. In addition, the wireless device **110** applies an electrical signal to the target **190** on a periodic basis. The wireless device **110** changes, for example, an electrical signal applying period, an arrangement of electrodes, and a strength, based on a control signal received from the external device **120**.

Further, the wireless device **110** wirelessly receives power from either one or both of the external device **120** and the relay device **230**. The wireless device **110** charges an embedded battery based on power received from either one or both of the external device **120** and the relay device **230**. For example, in a case in which power of the battery is discharged to be less than or equal to a threshold power, the wireless device **110** requests either one or both of the external device **120** and the relay device **230** to wirelessly transmit power. The wireless device **110** is attached to the target **190**, or disposed to transmit and receive power through a magnetic field direction that is the same as a magnetic field direction of the relay device **230**. Through a mutual resonance formed between the relay device **230** and a coil, the wireless device **110** may perform a wireless power transfer or a wireless power transmission.

The relay device **230** relays communication between the wireless device **110** and the external device **120**. The relay device **230** performs information exchanges between the wireless device **110** and the external device **120**. For example, the relay device **230** receives, from the wireless device **110**, an electrical signal detected by the wireless device **110** and transfers the received electrical signal to the external device **120**. In another example, the relay device **230** transfers, to the wireless device **110**, information or an instruction received from the external device **120**.

The relay device **230** is worn on an object associated with the target **190**. The relay device **230** is attached to a portion of the object that is adjacent to the target **190**. The object is, for example, a human being and an animal, and the target **190** may be a nerve. The portion adjacent to the target **190** may be skin adjacent to a vagus nerve. The nerve may be a vagus nerve. In such a case, the wireless device **110** applies an electrical signal to the vagus nerve within a range of a voltage, a current, and power that does not cause damage to a human body to stimulate the vagus nerve.

In addition, the relay device **230** provides the wireless device **110** with power charged in the battery. A size of the wireless device **110** may be relatively smaller than a size of the relay device **230**, and a capacity of the battery may also be relatively small. In response to a request for a wireless power transfer being received from the wireless device **110**, the relay device **230** provides power to the wireless device **110** to charge the battery of the wireless device **110**. The relay device **230** charges the battery of the wireless device **110** to extend an operating time of the wireless device **110**. A detailed structure of the relay device **230** will be described hereinafter with reference to FIG. **3**.

The external device **120** is, for example, a device configured to collect information received from the wireless device **110** or transfer, to the wireless device **110**, a command or an instruction to control an operation of the wireless device **110**. In addition, the external device **120** wirelessly provides power to either one or both of the wireless device **110** and the relay device **230**. For example, the external device **120** processes information received from the wireless device **110**, and outputs a result of the processing as visual information and auditory information.

According to an example, the wireless device **110** and the relay device **230** are produced to be smaller in size based on an arrangement of the coil, discrete elements, and embedded elements. In addition, the wireless device **110** and the relay device **230** may perform wireless communication and wireless charging more effectively based on a direction in which the coil included in the wireless device **110** and the relay device **230** is arranged.

When the wireless device **110** is inserted in the object and attached to the target **190**, and the relay device **230** is attached to the object, the wireless device **110** and the relay device **230** may have a high transmission efficiency with a small size, using a structure in which coil resonance directions are mutually arranged. In a case in which the object is a human body, the wireless device **110** may be inserted inside the human body from a surface of the human body, and the wireless device **230** may be attached outside the surface of the human body.

According to an example, the wireless device **110** continuously applies an electrical signal to the target **190**, for example, a human nerve, to treat a patient suffering from a neurotic disorder such as epilepsy. In addition, the wireless device **110** may apply an electrical signal to the target **190** to relieve or prevent a chronic pain from, for example, rheumatoid arthritis. Further, the relay device **230** may have a high power transmission efficiency for the wireless device **110**, without a need to cover a circumference of the object, for example, a neckline, by the relay device **230**.

FIG. **3** is a diagram illustrating an example of the relay device **230**.

Referring to FIG. **3**, the relay device **230** includes a coil **310**, a processor **320**, and a battery **330**. The relay device **230** is formed of flexible materials, and thus can be closely attached, in a form of a bandage, to a curved surface of an object.

The coil **310** is designed to have a resonance direction matching a resonance direction of a wireless device inserted in the object. The coil **310** forms a mutual resonance with respect to a coil of the wireless device. For example, the coil **310** is designed to have a resonant frequency matching a resonant frequency of the coil of the wireless device.

The processor **320** is disposed on a flexible substrate, and controls an operation of the relay device **230**. For example, the processor **320** receives power from an external device through the coil **310** and charges the battery **330**. The processor **320** transfers power charged in the battery **330** to the wireless device through the coil **310**.

The battery **330** is formed of a flexible material, and provides power to each module of the relay device **230**. For example, in response to power of the battery **330** being consumed, the relay device **230** is replaced by a new relay device by a user. Thus, the user may conveniently replace the relay device **230**, which is attached to an external surface of the object, without replacing the battery **330** of the wireless device **110**, which is inserted in the object.

FIG. **4** is a diagram illustrating an example of the wireless device **110**.

Referring to FIG. **4**, the wireless device **110** includes an electrode device **410** and a communication device **420**.

The electrode device **410** includes electrodes arranged to cover a target **190**. Channels may be allocated to the electrodes. The channels include, for example, a sensing channel used to sense or detect an electrical signal and a stimulating channel used to apply an electrical signal. Thus, the electrode device **410** may simultaneously perform an operation of sensing or detecting an electrical signal from the target **190** and an operation of applying an electrical signal to the target **190** through different channels.

The communication device **420** includes a coil that may be resonant along with a relay device (e.g., the relay device **230**) present outside an object. For example, the coil **310** included in the relay device **230** and the coil included in the communication device **420** are designed to have a same or similar resonant frequency. In addition, the coil of the communication device **420** may form a resonance direction **409** that is the same as that of the relay device **230**. Elements may be arranged in an upper space and a lower space from the coil of the communication device **420**, within a limited form factor. A housing of the wireless device **110** is coated with a water-repellent or water-proof coating. The housing of the wireless device **110** is formed of a biocompatible material, and packages the wireless device **110**. An interface of the electrode device **410**, for example, a neural interface, is disposed to cover the target **190**, for example, a nerve, through a linear arrangement of the electrodes. An electrode of the neural interface of the electrode device **410** is arranged to be in contact with the target **190**.

FIG. **5** is a diagram illustrating examples of elements included in the wireless device **110**. Elements included in the wireless device **110** may be classified by a function and a size of each of the components.

Referring to FIG. **5**, a discrete element **510** is an element arranged on a coil and connected to a chip through a vertical interconnect access (via). In one example, the discrete element **510** is a passive element configured to separate voltages of circuits in the chip, which includes a processor. The discrete element **510** is, for example, a capacitor, an inductor, and a resistor connected to the chip, which includes the processor, through the via. A size of the discrete element **510** is less than or equal to, for example, 0.6×0.3 millimeters (mm).

An embedded element **520** is an element disposed in a layer distinguished from a layer including the coil and a layer including the processor, and connected to the processor through the via. A size of the embedded element **520** is between, for example, 2×1.6 mm and 1×0.5 mm.

An electrode contact **530** is a contact connected to an electrode. For example, the electrode contact **530** is formed of a conductive metal material. A size of the electrode contact **530** may be less than or equal to, for example, 1×1 mm.

A battery contract **540** is a contact connected to a battery. For example, the battery contact **540** is formed of a conductive metal material. The battery contact **540** may be less than or equal to, for example, 2×2 mm.

A chip package **550** is a chip configured to perform various functions. The chip includes, for example, a communication-related circuit, an electrode-related circuit, and a battery-related circuit. The circuits included in the chip will be described in detail with reference to FIGS. **13** and **14**. A size of the chip package **550** may be less than or equal to, for example, 3×3 mm.

A substrate **560** is an element on which the coil, the discrete element **510**, the embedded element **520**, the electrode contact **530**, the battery contact **540**, and the chip package **550** are disposed. For example, the substrate **560** is formed of a biocompatible and flexible material. A size of the substrate **560** may be less than or equal to, for example, 5×5 mm in a communication device, and may be between 2×30 mm and 2×50 mm in an electrode device.

According to an example, the wireless device **110** may be smaller in size by using a structure in which the elements described above are stacked. For example, the discrete

element **510** is arranged on the coil and a signal received through the coil is transferred to the processor through the via, and thus a mounting space may be provided. In addition, the chip package **550** and the embedded element **520** are disposed in a core area of the communication device **420**. The coil is disposed around the core area, and the core area is laterally spaced from the coil by a threshold distance. For example, the core area corresponds to an interior region of an area bounded by the coil. The mounting space may be embodied as a three-dimensional (3D) space. The chip package **550** will also be referred to as a chip.

FIGS. **6** through **8** are diagrams illustrating an example of a structure of a communication device **600**.

FIG. **6** is a top view of the communication device **600**, FIG. **7** is a perspective view of the communication device **600**, and FIG. **8** is a front view of the communication device **600**.

Referring to FIGS. **6** through **8**, discrete elements **610**, a chip **650**, and embedded elements **620** are disposed in an upper layer that is above a layer including a coil **670** of the communication device **600**. An electrode contact **630**, a battery contact **640**, and a substrate **660** are disposed in a lower layer that is below the layer including the coil **670**. For example, a processor included in the chip **650** is disposed in a layer distinguished from the coil **670**. In other words, the processor included in the chip **650** and the coil **670** are disposed in different layers.

In one example, the discrete elements **610** are arranged on the coil **670** in a layer, for example, the upper layer, that is distinguished from the layer including the coil **670**. For example, the discrete elements **610** are arranged in an outer edge ring area excluding a core area **601**, around which the coil **670** is disposed, in the layer distinguished from the coil **670**. Thus, the discrete elements **610** may be less affected by a magnetic field or an electric field that is formed by the coil **670** in the core area **601**. For example, the discrete elements **610** are arranged on the coil **670** to be separate from each other by a preset or specified distance. In addition, the discrete elements **610** are arranged along the coil **670** at a preset or specified interval, for example, an interval obtained by dividing a circumference length of the coil **670** by a number of the discrete elements **610**.

The chip **650**, including the processor, is disposed in the core area **601**.

The embedded elements **620** are disposed in a layer distinguished from the layer including the coil **670** and the layer including the processor. For example, in a case in which an embedded element having a large size or a large area is to be disposed on the coil **670**, the embedded element is disposed in the core area **601** in a layer under a layer including the chip **650**.

In one example, the embedded elements **620** include an isolated network circuit configured to separate a signal of a first bandwidth and a signal of a second bandwidth. The embedded elements **620** also include a first capacitor that is connected to a first partial coil in the coil **670** to receive the signal of the first bandwidth, and a second capacitor that is connected to a second partial coil in the coil **670** to receive the signal of the second bandwidth. In this example, the first partial coil and the second partial coil share at least one loop.

For example, the isolated network circuit blocks an inflow of the signal of the second bandwidth into a first transceiver circuit configured to transmit and receive the signal of the first bandwidth through the first partial coil. Similarly, the isolated network circuit blocks an inflow of the signal of the first bandwidth into a second transceiver circuit configured to transmit and receive the signal of the second bandwidth through the second partial coil. For example, the isolated network circuit includes a band-stop filter at a front end of the first transceiver circuit to block the signal of the second bandwidth, and a band-stop filter at a front end of the second transceiver circuit to block the signal of the first bandwidth.

The second bandwidth is a bandwidth allocated for a wireless power transfer, and the first bandwidth is a bandwidth allocated for wireless communication. For example, the second bandwidth indicates a frequency bandwidth that is lower than the first bandwidth. The bandwidths are not limited to the preceding example, and the second bandwidth and the first bandwidth may vary based on a design.

The electrode contact **630**, the battery contact **640**, and the substrate **660**, which are disposed in the lower layer below the layer including the coil **670**, are connected to the chip **650** through a via. The electrode contact **630**, the battery contact **640**, and the substrate **660** transmit and receive a signal with the chip **650** through the via.

FIGS. **9** through **11** are diagrams illustrating another example of a structure of a communication device **900**.

FIG. **9** is a top view of the communication device **900**, FIG. **10** is a perspective view of the communication device **900**, and FIG. **11** is a front view of the communication device **900**.

Elements disposed in an upper layer above a coil in the communication device **900**, for example, discrete elements **910**, embedded elements **920**, an electrode contact **930**, and a chip **950** illustrated in FIGS. **9** through **11**, may be arranged similarly to the discrete elements **610**, the embedded elements **620**, the electrode contact **630**, and the chip **650** as illustrated in FIGS. **6** through **8**.

The coil includes a first partial coil **970** configured to resonate in a first bandwidth and a second partial coil **980** configured to resonate in a second bandwidth different from the first bandwidth.

The first partial coil **970** and the second partial coil **980** are designed to have different resonance directions. For example, a resonance direction of the first partial coil **970** is orthogonal to a resonance direction of the second partial coil **980**. In one example, the first partial coil **970** includes a loop configured to generate an electric field, E-field, in a first direction and the second partial coil **980** includes a loop configured to generate a magnetic field, H-field, in a second direction. The first direction and the second direction may be orthogonal to each other. In addition, the second partial coil **980** includes a loop configured to generate the E-field in the first direction orthogonal to the second direction, while generating the H-field in the second direction. Thus, the first partial coil **970** and the second partial coil **980** may be disposed to enable a wireless power transfer and wireless communication in a same direction without hindering the H-field and the E-field of each.

For example, as illustrated in FIG. **9**, the first partial coil **970** includes planar loops, and the second partial coil **980** includes double helical loops. In addition, as illustrated in FIGS. **10** and **11**, the second partial coil **980** is disposed to occupy a 3D space below a layer including the first partial coil **970**.

The battery contact **940** and the substrate **960** are disposed in a layer below the second partial coil **980**.

FIGS. **12** through **14** are diagrams illustrating examples of configurations of communication devices.

FIG. **12** is a diagram illustrating a configuration of a communication device **1200**.

Referring to FIG. **12**, the communication device **1200** includes a discrete element **1210**, a processor **1250**, and a coil **1270**.

The coil **1270** is used to establish wireless communication with either one or both of a relay device and an external device, which is present outside an object, or wirelessly receive power from either one or both of the relay device and the external device.

The processor **1250** is disposed in a core area around which the coil **1270** is disposed, and establishes communication with the external device through the coil **1270**. The processor **1250** is connected to electrodes arranged in a form covering a target, and receives an electrical signal from at least one of the electrodes or provides an electrical signal to at least one of the electrodes.

The discrete element **1210** is arranged on the coil **1270** and connected to the processor **1250** through a via. As described above, the discrete element **1210** is disposed in an area of the coil **1270** that is in a layer distinguished from the coil **1270**, and thus a mounting space may be secured in the communication device **1200**. As illustrated in FIG. **12**, the discrete element **1210** is arranged in the layer distinguished from the coil **1270** in an area including the coil **1270**, for example, a planar area. For example, the area including the coil **1270** is provided in a form of an outer edge ring, and the discrete element **1210** is arranged in an outer edge ring area in the layer distinguished from the coil **1270**.

FIG. **13** is a diagram illustrating a circuit of a communication device **1300**, which corresponds to the communication device **600** illustrated in FIGS. **6** through **8**.

Referring to FIG. **13**, the communication device **1300** includes discrete elements **1310**, embedded elements **1320**, a chip **1350**, a coil **1370**, an electrode interface **1380**, and a battery **1390**.

The discrete elements **1310** separate voltages of circuits in the chip **1350** including a processor **1351**. For example, the discrete elements **1310** decouple noise of a power supply, for example, a power management circuit **1357**, from the circuits. As described above, the discrete elements **1310** are arranged on the coil **1370** and connected to the chip **1350** through a via. In FIGS. **13** and **14**, ⊠ indicates a connection through the via.

The embedded elements **1320** include an inductor connected to the power management circuit **1357** in the chip **1350**. In addition, the embedded elements **1320** include a capacitor configured to set a resonant frequency of a feeder **1371** configured to feed power to the coil **1370** and a resonant frequency of the coil **1370**.

The chip **1350** includes the processor **1351**, a first transceiver circuit **1352**, a second transceiver circuit **1353**, a sensing circuit **1354**, a driving circuit **1355**, an electrode router circuit **1356**, the power management circuit **1357**, and a battery management circuit **1358**.

The first transceiver circuit **1352** transmits and receives a signal of a first bandwidth through the coil **1370**. For example, the first transceiver circuit **1352** transmits and receives the signal of the first bandwidth through a first partial coil of the coil **1370**. The second transceiver circuit **1353** transmits and receives a signal of a second bandwidth different from the first bandwidth through the coil **1370**. For example, the second transceiver circuit **1353** transmits and receives the signal of the second bandwidth through a second partial coil of the coil **1370**. The first partial coil and the second partial coil share at least one loop. As illustrated in FIG. **13**, the first transceiver circuit **1352** and the second transceiver circuit **1353** are included in the chip **1350** including the processor **1351**. For example, the first transceiver circuit **1352** performs wireless communication through the signal of the first bandwidth, and the second transceiver circuit **1353** wirelessly receives power through the second bandwidth. The wireless communication may be far-field communication, and a wireless power transfer may be near-field communication.

The sensing circuit **1354** detects, through a first electrode, an electrical signal corresponding to a point on an object (e.g., human body) to which the first electrode is attached. The first electrode is an electrode connected to the sensing circuit **1354** through the electrode router circuit **1356** among electrodes included in the electrode interface **1380**. The first electrode is also an electrode to which a sensing channel is allocated. The sensing circuit **1354** detects an electrical signal from a target, for example, a human nerve.

The driving circuit **1355** applies, through a second electrode, an electrical signal to a point on the object to which the second electrode is attached. The second electrode is an electrode connected to the driving circuit **1355** through the electrode router circuit **1356** among the electrodes included in the electrode interface **1380**. The second electrode is also an electrode to which a stimulating channel is allocated. The driving circuit **1355** applies an electrical signal of a magnitude or amplitude that may not cause damage to the target, for example, a human nerve.

The sensing circuit **1354** and the driving circuit **1355** may be analog front ends (AFEs).

The electrode router circuit **1356** is connected to the electrodes. The electrode router circuit **1356** is included in the chip **1350** including the processor **1351**. The electrode router circuit **1356** connects the first electrode among the electrodes to the sensing circuit **1354**, and connects the second electrode among the electrodes to the driving circuit **1355**.

The power management circuit **1357** is a circuit used to supply power to each of the other circuits of the communication device **1300**. For example, the power management circuit **1357** manages power received through the coil **1370** and obtained from the battery **1390**, and distributes the power to each of the other circuits.

The battery management circuit **1358** charges or discharges the battery **1390**. For example, the battery management circuit **1358** charges the battery **1390** with power obtained through the power management circuit **1357**. In addition, the battery management circuit **1358** provides the power management circuit **1357** with power obtained from the battery **1390**.

FIG. **14** is a diagram illustrating a circuit of a communication device **1400**, which corresponds to the communication device **900** illustrated in FIGS. **9** through **11**.

Discrete elements **1410**, a chip **1450**, an electrode interface **1480**, and a battery **1490**, which are included in a communication device **1400** illustrated in FIG. **14**, may be similar to the discrete elements **1310**, the chip **1350**, the electrode interface **1380**, and the battery **1390**, which are included in the communication device **1300** illustrated in FIG. **13**. In addition, a processor **1451**, a sensing circuit **1454**, a driving circuit **1455**, an electrode router circuit **1456**, a power management circuit **1457**, and a battery management circuit **1458**, which are included in the chip **1450** illustrated in FIG. **14**, may be similar to the processor **1351**, the sensing circuit **1354**, the driving circuit **1355**, the electrode router circuit **1356**, the power management circuit **1357**, and the battery management circuit **1358**, which are included in the chip **1350** illustrated in FIG. **13**.

Referring to FIG. **14**, the communication device **1400** includes a first partial coil **1472** and a second partial coil **1473**. The first partial coil **1472** and the second partial coil **1473** are connected to a first transceiver circuit **1452** and a

second transceiver circuit **1453**, respectively. The first transceiver circuit **1452** transmits and receives a signal of a first bandwidth, and the second transceiver circuit **1453** transmits and receives a signal of a second bandwidth.

One embedded element among embedded elements **1420** is a first capacitor connected to the first partial coil **1472** and configured to set a resonant frequency of the first partial coil **1472**. Another embedded element among the embedded elements **1420** is a second capacitor connected to the second partial coil **1473** and configured to set a resonant frequency of the second partial coil **1473**. In addition, yet another embedded element among the embedded elements **1420** is an inductor connected to the power management circuit **1457**.

FIG. **15** is a diagram illustrating an example of a distance between a coil **1570** and a chip **1550** of a communication device **1500**.

Referring to FIG. **15**, the chip **1550** including a processor is spaced from the coil **1570** by a distance **1501** that is greater than or equal to a threshold distance. In response to the distance **1501** between the coil **1570** and the chip **1550** increasing, a radiation efficiency of the coil **1570** may be improved.

For example, in a case in which the distance **1501** between the coil **1570** and the chip **1550** is 1 millimeter (mm), the radiation efficiency may be degraded by approximately 2 decibels (dB) compared to a structure in which only the coil **1570** is arranged. In a case in which the distance **1501** between the coil **1570** and the chip **1550** is less than 1 mm, the radiation efficiency may be degraded by approximately 5 dB compared to the structure in which only the coil **1570** is arranged.

In addition, an arrangement of discrete elements on the coil **1570** may reduce a degradation of the radiation efficiency of the coil **1570**. For example, as illustrated in FIG. **15**, eight discrete elements each having a length of 1 mm and a width of 0.05 mm are arranged in an area of the coil **1570**, and the radiation efficiency is degraded by only −0.4 dB.

Thus, by arranging discrete elements in another layer distinguished from the coil **1570** in a planar area corresponding to the coil **1570**, the radiation efficiency of the coil **1570** may be minimally degraded and the communication device may have a structure for which a space utilization is maximized.

FIGS. **16** and **17** are diagrams illustrating examples of structures of coils of communication devices.

Referring to FIG. **16**, a coil **1670** of a communication device **1600** includes a first partial coil and a second partial coil, and the first partial coil and the second partial coil share at least one loop.

In one example, the first partial coil and the second partial coil are designed to have a same resonance axis, and a direction of a magnetic field, for example, a second direction **1602** illustrated in FIG. **16**, that is generated by the coil **1670** follows the resonance axis. For example, the first partial coil transmits and receives a signal used for wireless communication, and the wireless communication is established by generating an electric field, E-field, in a first direction **1601**. In addition, the second partial coil wirelessly receives power, and the power is wirelessly received by generating a magnetic field, H-field, in the second direction **1602**.

As illustrated in FIG. **16**, the first partial coil and the second partial coil have the same direction of the magnetic field, for example, the second direction **1602**. In this example, the direction of the electric field and the direction of the magnetic field may be orthogonal to each other, and thus the first partial coil may establish the wireless communication through the electric field E-field in the first direction **1601**, and the second partial coil may wirelessly receive power through the magnetic field H-field in the second direction **1602**. The first direction **1601** and the second direction **1602** may be orthogonal to each other.

Thus, a structure in which the first partial coil and the second partial coil share at least one loop may be designed to be a planar structure to minimize a space. In addition, directions for the wireless communication and the wireless power transfer may be separated, as in the first direction **1601** of the wireless communication and the second direction **1602** of the wireless power transfer.

FIG. **17** is a diagram illustrating a communication device **1700** in which a resonance direction of a first partial coil **1771** and a resonance direction of a second partial coil **1772** are orthogonal to each other.

Referring to FIG. **17**, a first partial coil **1771** is configured to be in a planar loop structure, and a second partial coil **1772** is configured to be in a 3D double helical loop structure.

For example, a direction of a magnetic field of the first partial coil **1771** and a direction of a magnetic field of the second partial coil **1772** are designed to be orthogonal to each other. Since a direction of an electric field and a direction of a magnetic field may be orthogonal to each other, the first partial coil **1771** includes a loop configured to generate an electric field, E-field, in a first direction **1701**, and the second partial coil **1772** includes a loop configured to generate a magnetic field, H-field, in a first direction **1702**. The first partial coil **1771** establishes wireless communication in the first direction **1701**, and the second partial coil **1772** wirelessly receives power from the first direction **1702**. Thus, a communication device **1700** may perform the wireless communication and a wireless power transfer in the same first directions **1701** and **1702**.

Thus, by arranging the direction of the magnetic field and the direction of the electric field as described above, a communication distance and a power transmission efficiency may be improved when the communication device **1700** is inserted in an object, for example, a human body.

FIGS. **18** and **19** are diagrams illustrating examples of communication devices and an example of an electrode device.

FIG. **18** is a diagram illustrating an example of a wireless device **1800** having a structure in which a communication device **1810** including a coil having a planar structure is integrated with an electrode device **1820**.

The communication device **1810** illustrated in FIG. **18** may be configured similarly to the communication device **600** illustrated in FIGS. **6** through **8**.

The electrode device **1820** includes a substrate **1850** on which electrodes are arranged, and a battery **1822**.

A battery contact **1821** is disposed on the battery **1822**. Power of the battery **1822** is transferred to the communication device **1810** through the battery contact **1821**. The battery contact **1821** includes a positive contact and a negative contact.

The electrodes are arranged on the substrate **1850**. The electrodes are classified based on channels, for example, sensing channels **1831** and **1832**, and a stimulating channel **1833**.

The sensing channels **1831** and **1832** are channels to detect or sense an electrical signal from a target. The sensing channels **1831** and **1832** include a first sensing channel **1831** and a second sensing channel **1832**. Each of the sensing channels **1831** and **1832** includes a positive electrode, a negative electrode, and a reference electrode. Thus, each of

the sensing channels **1831** and **1832** may obtain a differential signal. A number of sensing channels is not limited to the example described above, and may vary based on a design.

The stimulating channel **1833** includes a working electrode, a counter electrode, and a reference electrode.

FIG. **19** is a diagram illustrating a communication device **1910** that is configured similarly to the communication device **900** described with reference to FIGS. **9** through **11**.

Referring to FIG. **19**, a circuit **1910** corresponding to a first partial coil and a circuit **1920** corresponding to a second partial coil are stacked or laminated in sequential order. For example, the circuit **1910** corresponding to the first partial coil including a planar loop is disposed in an upper layer, and the circuit **1920** corresponding to the second partial coil, which includes a double helical loop that has a resonance direction orthogonal to the first partial coil is three-dimensionally disposed in a middle layer. An electrode device **1930** is disposed in a lower layer. The electrode device **1930** may be configured similarly to the electrode device **1820** illustrated in FIG. **18**.

The communication device may minimize a degradation of radiation performance of the circuit **1910** corresponding to the first partial coil and the circuit **1920** corresponding to the second partial coil, and may also maximize a stacking efficiency using a 3D structure.

FIG. **20** is a diagram illustrating an example of an arrangement of electrodes of an electrode device.

Referring to FIG. **20**, an electrode device includes electrodes **2010**.

The electrodes **2010** are arranged on a face of a substrate **2050** that is in contact with a target **2090** in a longitudinal direction of the substrate **2050**. For example, the electrodes **2010** are arranged in line at preset or specified intervals therebetween along the substrate **2050**. Each of the electrodes **2010** is allocated to one of a sensing channel and a stimulating channel. The electrodes **2010** are formed of a biocompatible metal.

The substrate **2050** is formed of a flexible material, and covers the target **2090**. For example, the substrate **2050** is thin and long with a small width and a great length, and arranged to helically cover the target **2090**. The substrate **2050** is provided in a form of a helical thread. The substrate **2050** is formed of a material suitable for a living body.

An electrode router (not shown) connects the electrodes **2010** and a processor. The electrode router is also referred to as an electrode router circuit as illustrated in FIGS. **13** and **14**. The electrode router transfers, to the processor, an electrical signal detected or sensed through a first electrode among the electrodes **2010**. The electrode router applies an electrical signal to a point of the target **2090** in contact with a second electrode that is different from the first electrode among the electrodes **2010**. The first electrode is an electrode allocated to the sensing channel, and the second electrode is an electrode allocated to the stimulating channel.

FIGS. **21** and **22** are diagrams illustrating examples of an arrangement of electrode channels of the electrode device **1820** of FIG. **18**.

FIG. **21** is a diagram illustrating an example of an arrangement of electrodes on a substrate connected to the electrode device **1820** illustrated in FIG. **18**.

In one example, electrodes are classified based on channels, and electrodes belonging to a same channel among the channels are arranged not to be adjacent to each other on a substrate. For example, a positive electrode and a negative electrode that correspond to a single differential signal in a same channel are arranged as far apart as possible on the substrate.

As illustrated in FIG. **21**, a counter electrode CE **2111** and a working electrode WE **2112** of a stimulating channel are arranged as far apart as possible on the substrate. A negative electrode SE**1**– **2121** and a positive electrode SE**1**+ **2122** of a first sensing channel are arranged not to be adjacent to each other. Similarly, a negative electrode SE**2**– **2131** and a positive electrode SE**2**+ **2132** of a second sensing channel are arranged not to be adjacent to each other. A reference electrode RE of each channel is arranged on a central portion of the substrate, and operates as a ground.

In a case in which corresponding electrodes in a same channel are arranged as far apart as possible from each other, a signal amplification effect may be obtained as illustrated in FIG. **25**.

FIG. **22** is a diagram illustrating another example of an arrangement of electrodes on a substrate connected to the electrode device **1820** illustrated in FIG. **18**.

In one example, electrodes are classified based on channels, and electrodes belonging to a same channel among the channels are arranged to be adjacent to each other on a substrate. For example, a positive electrode and a negative electrode that correspond to a single differential signal in a same channel are arranged to be adjacent to each other on the substrate.

As illustrated in FIG. **22**, a negative electrode SE**1**– **2211** and a positive electrode SE**1**+ **2212** of a first sensing channel are arranged adjacent to each other along with a reference electrode RE. A negative electrode SE**2**– **2231** and a positive electrode SE**2**+ **2232** of a second sensing channel are arranged adjacent to each other along with a reference electrode RE. A counter electrode CE **2221** and a working electrode WE **2222** of a stimulating channel are arranged adjacent to each other along with a reference channel.

FIG. **23** is a diagram illustrating an example of a dynamic allocation of electrode channels of an electrode device **2300**.

Referring to FIG. **23**, the electrode device **2300** includes an electrode interface **2310**, an electrode router **2320**, a sensing circuit **2330**, and a driving circuit **2340**.

The electrode interface **2310** includes electrodes and a substrate on which the electrodes are arranged.

The electrode router **2320** is connected to the electrodes on the substrate. The electrode router **2320** transfers an electrical signal received from each electrode to a processor (not shown) through the sensing circuit **2330** based on channels allocated to the electrodes. In addition, the electrode router **2320** transfers an electrical signal received from the processor to the electrode interface **2310** through the driving circuit **2340**.

The sensing circuit **2330** detects or senses an electrical signal from a connected electrode through the electrode router **2320**.

The driving circuit **2340** applies an electrical signal to a connected electrode through the electrode router **2320**.

In one example, in response to a control command of the processor, the electrode router **2320** changes a mapping of a channel to be allocated to each electrode. Here, the term "allocate" may be used for both electrodes and channels, and allocating an electrode to a channel and allocating a channel to an electrode are construed herein as having a same meaning. For example, in response to the control command of the processor, the electrode router **2320** allocates a sensing channel of the electrode router **2320** to at least a portion (e.g., one or more) of the electrodes by connecting the at least a portion of the electrodes to the sensing circuit **2330**. In addition, in response to the control command of the processor, the electrode router **2320** allocates a stimulating channel of the electrode router **2320** to at least a portion

(e.g., one or more) of remaining electrodes among the electrodes by connecting the at least a portion of the remaining electrodes to the driving circuit **2340**. As illustrated in FIG. **23**, the electrodes include electrodes A**1**, A**2**, A**3**, B**1**, B**2**, B**3**, C**1**, C**2**, and C**3**, and the electrode router **2320** allocates, to the electrodes, a positive electrode SE**1+** and a negative electrode SE− of a first sensing channel, a positive electrode SE**2+** and a negative electrode SE**2−** of a second sensing channel, and a working electrode WE and a counter electrode CE of the stimulating channel.

As described above, the processor controls the electrode router **2320** to control a connection among the sensing circuit **2330**, the driving circuit **2340**, and the electrode interface **2310**. For example, the processor allocates at least a portion of the electrodes to the sensing channel of the electrode router, and at least a portion of remaining electrodes among the electrodes to the stimulating channel of the electrode router **2320**. For another example, the processor allocates at least a portion of the electrodes to the sensing channel of the electrode router **2320**, and at least another portion of the electrodes to the stimulating channel of the electrode router **2320**, based on an electrical signal detected from a target. Such a dynamic channel allocation performed based on the electrical signal detected from the target will be described in detail with reference to FIGS. **24** and **25**.

FIGS. **24** and **25** are diagrams illustrating examples of a differential signal based on an allocation of electrode channels.

As described above, a processor may allocate a sensing channel to at least a portion of electrodes, and a stimulating channel to at least a portion of remaining electrodes among the electrodes.

For example, as illustrated in FIG. **24**, in response to an electrical signal detected from a target **2490** including a threshold value or greater of common noise, the processor allocates the channels to the electrodes to arrange electrodes belonging to a same channel to be adjacent to each another on a substrate.

As illustrated in FIG. **24**, in a case in which electrodes allocated to a same channel are arranged adjacent to each other, common noise is removed from a differential signal **2440** associated with a first signal **2420** detected from a positive channel **2411** of the sensing channel and a second signal **2430** detected from a negative channel **2412** of the sensing channel. Thus, the processor may obtain a signal that is robust against the common noise by arranging electrodes of a same channel to be adjacent to each other in response to the threshold value or greater of common noise being detected.

For another example, as illustrated in FIG. **25**, in response to the electrical signal detected from a target **2590** including common noise of a value less than the threshold value, the processor allocates the channels to the electrodes to arrange electrodes belonging to a same channel not to be adjacent to each other on the substrate.

As illustrated in FIG. **25**, in a case in which electrodes allocated to a same channel are arranged not to be adjacent to each other, an amplitude of a differential signal **2540** associated with a first signal **2520** detected from a positive channel **2511** of a sensing channel and a second signal **2530** detected from a negative channel **2512** of the sensing channel is amplified. Thus, in response to the common noise being low (e.g., less than the threshold value), the processor may obtain an amplified electrical signal by arranging electrodes of a same channel to be far apart from each other.

As described above, a processor of a wireless device, a communication device, and an electrode device may dynamically map channels to be allocated to linearly arranged electrodes based on a period and an amplitude of an electrical signal detected from a target being observed. Thus, after the wireless device is inserted in an object, the wireless device may determine an optimal electrode arrangement without being separated from the object.

In addition to detection, in terms of stimulation, the wireless device, the communication device, and the electrode device may apply an electrical signal to the target through a current path having a higher signal-to-noise ratio (SNR). Thus, power to be used for electrostimulation applied to the target may be adjusted, and thus power efficiency may be improved.

FIGS. **26** and **27** are diagrams illustrating another example of a configuration of a communication device **2600**.

Referring to FIG. **26**, the communication device **2600** includes a first chip package **2601**, a second chip package **2602**, a motion sensor **2660**, a coil **2670**, and a battery **2690**. The first chip package **2601** and the second chip package **2602** may be embodied in a form of a single chip. However, the form is not limited to the example provided above, and thus the first chip package **2601** and the second chip package **2602** may be embodied in a form of separate chips.

The first chip package **2601** may be a chip configured to operate at a voltage less than or equal to a first threshold voltage. The voltage less than or equal to the first threshold voltage may also be referred to as a low voltage. In an example, a first transceiver circuit **2652**, a processor **2651**, and a sensing circuit **2654** that are included in the first chip package **2601** operate at such a low voltage. For example, when the first threshold voltage is designed to be 2 volts (V), the first chip package **2601** applies a low voltage of 1.8V to the first transceiver circuit **2652**, the processor **2651**, and the sensing circuit **2654**.

However, examples are not limited to the example described above. For example, the first chip package **2601** may be configured to operate in a first voltage range. The first voltage range may be a range of the low voltage less than or equal to the first threshold voltage.

For example, when the first voltage range is designed to be 1.6V to 2V, the first chip package **2601** applies a low voltage of 1.7V or 1.9V to the first transceiver circuit **2652**, the processor **2651**, and the sensing circuit **2654**. The first chip package **2601** operating at the low voltage may operate mainly to transmit a signal.

The second chip package **2602** may be a chip configured to operate at a voltage greater than or equal to a second threshold voltage. The voltage greater than or equal to the second threshold voltage may also be referred to as a high voltage. The second threshold voltage may be greater than the first threshold voltage. In an example, a second transceiver circuit **2653**, a driving circuit **2655**, and a power management circuit **2657** that are included in the second chip package **2602** operate at such a high voltage. For example, when the second threshold voltage is designed to be 11V, the second chip package **2602** applies a high voltage of 12V to the second transceiver circuit **2653**, the driving circuit **2655**, and the power management circuit **2657**.

However, examples are not limited to the example described above. For example, the second chip package **2602** may be embodied to operate in a second voltage range. The second voltage range may be a range of the high voltage greater than or equal to the second threshold voltage. For example, when the second voltage range is designed to be 11V to 13V, the second chip package **2602** applies a high voltage of 11.5V or 12.5V to the second transceiver circuit **2653**, the driving circuit **2655**, and the power management

circuit **2657**. The second chip package **2602** operating at the high voltage may operate mainly to manage a voltage.

In FIG. **26**, a solid line arrow indicates power transfer, and a broken line arrow indicates signal transfer. As illustrated, power received through the coil **2670** is transferred to the battery **2690** through the second transceiver circuit **2653**. The power management circuit **2657** provides the power received from the battery **2690** to the remaining circuits. Also, a signal received through the coil **2670** is transferred to the processor **2651** through the first transceiver circuit **2652**. The processor **2651** processes the signal and transfers the processed signal to other circuits, or processes a signal transferred from the other circuits.

In an example, the communication device **2600** reduces power consumption by applying, to the first chip package **2601**, a voltage less than a voltage applied to the second chip package **2602**.

The motion sensor **2660** senses a motion of the communication device **2600**. The motion sensor **2660** is embodied as, for example, an acceleration sensor and a geomagnetic field sensor. The motion sensor **2660** may measure an acceleration applied to the communication device **2600**.

The processor **2651**, the first transceiver circuit **2652**, and the second transceiver circuit **2653**, the sensing circuit **2654**, the driving circuit **2655**, the power management circuit **2657**, the coil **2670**, and the battery **2690** may operate or be configured as described with reference to FIGS. **13** and **14**.

FIG. **27** illustrates a stacked structure of a communication device **2700** corresponding to the communication device **2600** of FIG. **26**.

Referring to FIG. **27**, the communication device **2700** includes a structure in which a substrate **2709**, a coil **2770**, a first chip package **2701**, a second chip package **2702**, and a battery **2790** are stacked in a sequential order. For example, as illustrated, the components of the communication device **2700** are stacked on a first surface of the substrate **2709** in an order of the first chip package **2701**, the second chip package **2702**, and the battery **2790**. In addition, a motion sensor may be stacked in a layer including the battery **2790**, or stacked on the battery **2790**.

A discrete element **2710** is stacked on a second surface of the substrate **2709** that is opposite to the first surface on which the first chip package **2701**, the second chip package **2702**, and the battery **2790** are staked. The discrete element **2710** is, for example, a decoupling capacitor.

The coil **2770**, the first chip package **2701**, the second chip package **2702**, and the battery **2790** may operate or be configured as described with reference to the first chip package **2601**, the second chip package **2602**, and the battery **2690** of FIG. **26**, and the substrate **2709** may be the same as the substrate **560** described above with reference to FIG. **5**.

The processors **320**, **1250**, **1351**, **1451**, and **2651** in FIGS. **1**, **12**, **13**, **14**, and **26**, respectively, and other components that perform the operations described in this application are implemented by hardware components configured to perform the operations described in this application that are performed by the hardware components. Examples of hardware components that may be used to perform the operations described in this application where appropriate include controllers, sensors, generators, drivers, memories, comparators, arithmetic logic units, adders, subtractors, multipliers, dividers, integrators, and any other electronic components configured to perform the operations described in this application. In other examples, one or more of the hardware components that perform the operations described in this application are implemented by computing hardware, for example, by one or more processors or computers. A processor or computer may be implemented by one or more processing elements, such as an array of logic gates, a controller and an arithmetic logic unit, a digital signal processor, a microcomputer, a programmable logic controller, a field-programmable gate array, a programmable logic array, a microprocessor, or any other device or combination of devices that is configured to respond to and execute instructions in a defined manner to achieve a desired result. In one example, a processor or computer includes, or is connected to, one or more memories storing instructions or software that are executed by the processor or computer. Hardware components implemented by a processor or computer may execute instructions or software, such as an operating system (OS) and one or more software applications that run on the OS, to perform the operations described in this application. The hardware components may also access, manipulate, process, create, and store data in response to execution of the instructions or software. For simplicity, the singular term "processor" or "computer" may be used in the description of the examples described in this application, but in other examples multiple processors or computers may be used, or a processor or computer may include multiple processing elements, or multiple types of processing elements, or both. For example, a single hardware component or two or more hardware components may be implemented by a single processor, or two or more processors, or a processor and a controller. One or more hardware components may be implemented by one or more processors, or a processor and a controller, and one or more other hardware components may be implemented by one or more other processors, or another processor and another controller. One or more processors, or a processor and a controller, may implement a single hardware component, or two or more hardware components. A hardware component may have any one or more of different processing configurations, examples of which include a single processor, independent processors, parallel processors, single-instruction single-data (SISD) multiprocessing, single-instruction multiple-data (SIMD) multiprocessing, multiple-instruction single-data (MISD) multiprocessing, and multiple-instruction multiple-data (MIMD) multiprocessing.

Instructions or software to control computing hardware, for example, one or more processors or computers, to implement the hardware components and perform the methods as described above may be written as computer programs, code segments, instructions or any combination thereof, for individually or collectively instructing or configuring the one or more processors or computers to operate as a machine or special-purpose computer to perform the operations that are performed by the hardware components and the methods as described above. In one example, the instructions or software include machine code that is directly executed by the one or more processors or computers, such as machine code produced by a compiler. In another example, the instructions or software includes higher-level code that is executed by the one or more processors or computer using an interpreter. The instructions or software may be written using any programming language based on the block diagrams and the flow charts illustrated in the drawings and the corresponding descriptions in the specification, which disclose algorithms for performing the operations that are performed by the hardware components and the methods as described above.

The instructions or software to control computing hardware, for example, one or more processors or computers, to implement the hardware components and perform the meth-

ods as described above, and any associated data, data files, and data structures, may be recorded, stored, or fixed in or on one or more non-transitory computer-readable storage media. Examples of a non-transitory computer-readable storage medium include read-only memory (ROM), random-access memory (RAM), flash memory, CD-ROMs, CD-Rs, CD+Rs, CD-RWs, CD+RWs, DVD-ROMs, DVD-Rs, DVD+Rs, DVD-RWs, DVD+RWs, DVD-RAMs, BD-ROMs, BD-Rs, BD-R LTHs, BD-REs, magnetic tapes, floppy disks, magneto-optical data storage devices, optical data storage devices, hard disks, solid-state disks, and any other device that is configured to store the instructions or software and any associated data, data files, and data structures in a non-transitory manner and provide the instructions or software and any associated data, data files, and data structures to one or more processors or computers so that the one or more processors or computers can execute the instructions. In one example, the instructions or software and any associated data, data files, and data structures are distributed over network-coupled computer systems so that the instructions and software and any associated data, data files, and data structures are stored, accessed, and executed in a distributed fashion by the one or more processors or computers.

While this disclosure includes specific examples, it will be apparent to one of ordinary skill in the art that various changes in form and details may be made in these examples without departing from the spirit and scope of the claims and their equivalents. The examples described herein are to be considered in a descriptive sense only, and not for purposes of limitation. Descriptions of features or aspects in each example are to be considered as being applicable to similar features or aspects in other examples. Suitable results may be achieved if the described techniques are performed in a different order, and/or if components in a described system, architecture, device, or circuit are combined in a different manner, and/or replaced or supplemented by other components or their equivalents. Therefore, the scope of the disclosure is defined not by the detailed description, but by the claims and their equivalents, and all variations within the scope of the claims and their equivalents are to be construed as being included in the disclosure.

What is claimed is:

1. A communication device, comprising:

a coil disposed around a core area of the communication device;

a processor disposed only in the core area and configured to establish communication with an external device through the coil; and

a discrete element disposed on the coil and connected to the processor through a via, wherein the discrete element comprises any one or any combination of any two or more of a capacitor, an inductor, and a resistor.

2. The communication device of claim **1**, wherein the processor is disposed in a layer distinguished from the coil.

3. The communication device of claim **1**, wherein the discrete element comprises a passive electronic component configured to separate voltages, by electrically decoupling circuits of circuits in a chip including the processor.

4. The communication device of claim **1**, wherein the discrete element is connected to a chip comprising the processor through the via, and is arranged in an outer edge ring area of the coil in a layer distinguished from the coil.

5. The communication device of claim **1**, further comprising:

a first transceiver circuit configured to transmit and receive, through the coil, a signal of a first bandwidth; and

a second transceiver circuit configured to transmit and receive, through the coil, a signal of a second bandwidth that is different from the first bandwidth,

wherein the first transceiver circuit and the second transceiver circuit are included in a chip comprising the processor.

6. The communication device of claim **5**, wherein

the first transceiver circuit is configured to operate at a voltage less than or equal to a first threshold voltage, and

the second transceiver circuit is configured to operate at a voltage greater than or equal to a second threshold voltage that is greater than the first threshold voltage.

7. The communication device of claim **1**, further comprising:

an electrode router circuit connected to electrodes of an electrode device,

wherein the electrode router circuit is included in a chip comprising the processor.

8. The communication device of claim **7**, wherein

the electrode router circuit is configured to connect a first electrode among the electrodes to a sensing circuit, and connect a second electrode among the electrodes to a driving circuit,

the sensing circuit is configured to detect, through the first electrode, an electrical signal corresponding to a point to which the first electrode is attached, and

the driving circuit is configured to apply, through the second electrode, an electrical signal to a point to which the second electrode is attached.

9. The communication device of claim **8**, wherein

the sensing circuit is configured to operate at a voltage less than or equal to a first threshold voltage, and

the driving circuit is configured to operate at a voltage greater than or equal to a second threshold voltage that is greater than the first threshold voltage.

10. The communication device of claim **1**, wherein the coil comprises

a first partial coil configured to resonate in a first bandwidth, and

a second partial coil configured to resonate in a second bandwidth that is different from the first bandwidth, and

the first partial coil and the second partial coil share a loop.

11. The communication device of claim **10**, wherein

the first partial coil comprises a loop configured to generate a magnetic field in a first direction, and

the second partial coil comprises a loop configured to generate an electric field in the first direction.

12. The communication device of claim **1**, further comprising:

an embedded element disposed in a layer distinguished from a layer comprising the coil and a layer including the processor, and connected to the processor through the via, wherein the embedded element comprises either one or both of a capacitor or an inductor; and

a motion sensor configured to sense a motion of the communication device.

13. The communication device of claim **1**, wherein a chip comprising the processor is spaced from the coil by a distance greater than or equal to a threshold distance.

14. The communication device of claim **1**, wherein the processor is connected to electrodes of an electrode device arranged to cover a target area associated with an object, and

is configured to receive an electrical signal from or provide an electrical signal to some of the electrodes.

15. The communication device of claim **14**, wherein the processor is configured to allocate a sensing channel configured to receive the electrical signal from the electrodes using one or more electrodes among the electrodes, and allocate a stimulating channel configured to provide an electrical signal to the target area using one or more remaining electrodes among the electrodes, based on the received electrical signal.

16. A communication device, comprising:

a coil disposed around a core area of the communication device;

a processor disposed in the core area and configured to establish communication with an external device through the coil;

a discrete element disposed on the coil and connected to the processor through a via, wherein the discrete element comprises any one or any combination of any two or more of a capacitor, an inductor, and a resistor, which is connected to a chip comprising the processor through the via; and

an electrode router circuit connected to electrodes of an electrode device, wherein

the electrode router circuit is configured to connect a first electrode among the electrodes to a sensing circuit, and connect a second electrode among the electrodes to a driving circuit,

the sensing circuit is configured to detect, through the first electrode, an electrical signal corresponding to a point to which the first electrode is attached, and

the driving circuit is configured to apply, through the second electrode, an electrical signal to a point to which the second electrode is attached.

17. The communication device of claim **16**, wherein the electrode router circuit is included in a chip comprising the processor.

18. A communication device, comprising:

a coil disposed around a core area of the communication device;

a processor disposed in the core area and configured to establish communication with an external device through the coil,

wherein the processor is connected to electrodes arranged to cover a target area associated with an object, and is configured to receive an electrical signal from or provide an electrical signal to some of the electrodes, and

wherein the processor is configured to allocate a sensing channel configured to receive the electrical signal from the electrodes using one or more electrodes among the electrodes, and allocate a stimulating channel configured to provide an electrical signal to the target area using one or more remaining electrodes among the electrodes, based on the received electrical signal; and

a discrete element disposed on the coil and connected to the processor through a via, wherein the discrete element comprises any one or any combination of any two or more of a capacitor, an inductor, and a resistor, which is connected to a chip comprising the processor through the via.

* * * * *