US008075468B2

(12) **United States Patent**
Min et al.

(10) **Patent No.: US 8,075,468 B2**
(45) **Date of Patent: Dec. 13, 2011**

(54) **SYSTEMS AND METHODS FOR MID-PROCESSING CALCULATION OF BLOOD COMPOSITION**

(75) Inventors: **Kyungyoon Min**, Kildeer, IL (US); **Richard I. Brown**, Northbrook, IL (US)

(73) Assignee: **Fenwal, Inc.**, Lake Zurich, IL (US)

(*) Notice: Subject to any disclaimer, the term of this patent is extended or adjusted under 35 U.S.C. 154(b) by 390 days.

(21) Appl. No.: **12/394,375**

(22) Filed: **Feb. 27, 2009**

(65) **Prior Publication Data**

US 2009/0215602 A1 Aug. 27, 2009

Related U.S. Application Data

(60) Provisional application No. 61/031,987, filed on Feb. 27, 2008.

(51) **Int. Cl.**
B01D 21/26 (2006.01)
B04B 3/00 (2006.01)

(52) **U.S. Cl.** **494/37**; 494/10; 494/35

(58) **Field of Classification Search** 494/10, 494/35, 37

See application file for complete search history.

(56) **References Cited**

U.S. PATENT DOCUMENTS

3,244,363	A	4/1966	Hein
3,489,145	A	1/1970	Judson et al.
4,010,894	A	3/1977	Kellogg et al.
4,094,461	A	6/1978	Kellogg et al.
4,189,382	A	2/1980	Zine, Jr. et al.
4,303,193	A	12/1981	Latham, Jr. et al.
4,402,680	A	9/1983	Schoendorfer
4,596,657	A	6/1986	Wisdom
4,640,785	A	2/1987	Carroll et al.
4,647,279	A	3/1987	Mulzet et al.
4,708,712	A	11/1987	Mulzet
4,713,176	A	12/1987	Schoendorfer et al.
4,776,964	A	10/1988	Schoendorfer et al.
4,798,577	A	1/1989	Brenneman et al.
4,806,252	A	2/1989	Brown et al.
4,816,168	A	3/1989	Carrol et al.
4,818,418	A	4/1989	Saunders
4,834,890	A	5/1989	Brown et al.
4,867,887	A	9/1989	Smith
4,871,462	A	10/1989	Fischel et al.
4,895,666	A	1/1990	Franzen et al.
4,911,833	A	3/1990	Schoendorfer et al.
4,944,883	A	7/1990	Schoendorfer et al.
4,954,264	A	9/1990	Smith
4,957,637	A	9/1990	Cornell

(Continued)

FOREIGN PATENT DOCUMENTS

WO	WO 88/06460	9/1988

Primary Examiner — Walter Griffin
Assistant Examiner — Timothy Cleveland
(74) *Attorney, Agent, or Firm* — Cook Alex Ltd.

(57) **ABSTRACT**

Blood separation methods are provided for mid-processing calculation of blood composition. Blood is conveyed into a device having an outlet line and the device is spun to separate platelets from the blood. A flow of platelets is conveyed from the device by the outlet line and the platelets in the outlet line are optically measured. With said optical measurement, a current platelet yield, a platelet pre-count, the volume of blood to process to collect a target amount of platelets, and/or the processing time required to collect a target amount of platelets is calculated. The optical measurement can also be used to calculate an amount of storage fluid to convey into a collection container with the platelets.

10 Claims, 68 Drawing Sheets

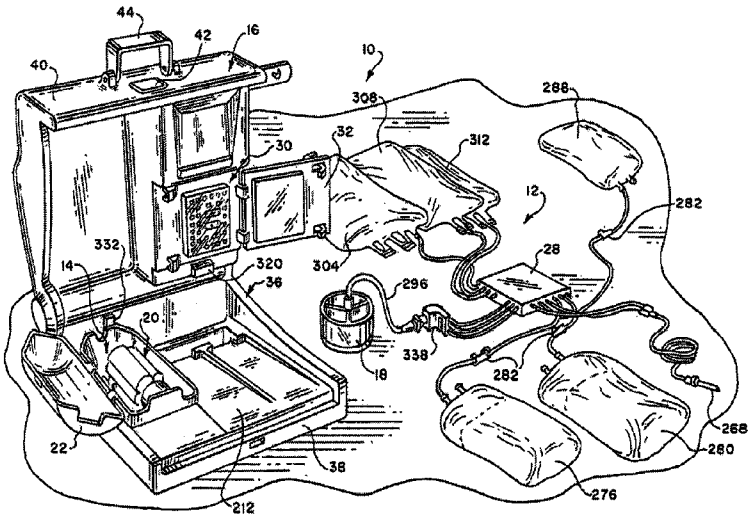

Terumo v. Haemonetics - IPR2026-00046
Petitioner Terumo Exhibit 1006-0001

U.S. PATENT DOCUMENTS

4,957,638	A	9/1990	Smith	
4,964,976	A	10/1990	Lysaght et al.	
4,981,585	A	1/1991	Kelley et al.	
4,985,153	A	1/1991	Kuroda et al.	
5,061,381	A	10/1991	Burd	
5,071,570	A	12/1991	Shiraki et al.	
5,076,911	A	12/1991	Brown et al.	
5,100,564	A	3/1992	Pall et al.	
5,124,434	A	6/1992	O'Brien	
5,173,193	A	12/1992	Schembri	
5,186,844	A	2/1993	Burd et al.	
5,217,627	A	6/1993	Pall et al.	
5,232,437	A	8/1993	Lysaght et al.	
5,258,126	A	11/1993	Pall et al.	
5,281,342	A	1/1994	Biesel et al.	
5,311,980	A	5/1994	Munkner et al.	
5,316,540	A	5/1994	McMannis et al.	
5,370,802	A	12/1994	Brown	
5,386,734	A	2/1995	Pusinelli	
5,387,187	A	2/1995	Fell et al.	
5,427,695	A *	6/1995	Brown	494/37
5,454,958	A	10/1995	Fiehler	
5,456,845	A	10/1995	Nishimura et al.	
5,458,566	A	10/1995	Herrig et al.	
5,494,592	A	2/1996	Latham, Jr. et al.	
5,506,333	A	4/1996	O'Brien et al.	
5,523,004	A	6/1996	Tanokura et al.	
5,545,339	A	8/1996	Bormann et al.	
5,547,591	A	8/1996	Hagihara et al.	
5,556,557	A	9/1996	O'Brien et al.	
5,585,007	A	12/1996	Antanavich et al.	
5,603,845	A	2/1997	Holm	
5,607,579	A	3/1997	Latham, Jr. et al.	
5,616,254	A	4/1997	Pall et al.	
5,632,905	A	5/1997	Haynes	
5,634,893	A	6/1997	Rishton	
5,637,082	A	6/1997	Pages et al.	
5,651,766	A	7/1997	Kingsley et al.	
5,653,887	A	8/1997	Wahl et al.	
5,663,051	A	9/1997	Vlasselaer	
5,690,815	A	11/1997	Krasnoff et al.	
5,693,232	A	12/1997	Brown et al.	
5,702,357	A	12/1997	Bainbridge et al.	
5,704,888	A	1/1998	Hlavinka et al.	
5,704,889	A	1/1998	Hlavinka et al.	
5,707,876	A	1/1998	Levine	
5,720,716	A	2/1998	Blakeslee et al.	
5,722,926	A	3/1998	Hlavinka et al.	
5,722,946	A	3/1998	Mudloff et al.	
5,728,060	A	3/1998	Kingsley et al.	
5,733,253	A	3/1998	Headley et al.	
5,738,796	A	4/1998	Bormann et al.	
5,750,025	A	5/1998	Holmes et al.	
5,769,811	A	6/1998	Stacey et al.	
5,779,660	A	7/1998	Kingsley et al.	
5,788,662	A	8/1998	Antanavich et al.	
5,792,038	A	8/1998	Hlavinka	
5,837,150	A	11/1998	Langley et al.	
5,840,502	A	11/1998	Van Vlasselaer	
5,849,203	A	12/1998	Brown et al.	
5,853,382	A	12/1998	Kingsley et al.	
5,855,773	A	1/1999	LaSota	
5,858,238	A	1/1999	McRea et al.	
5,858,253	A	1/1999	Holm	
5,876,321	A	3/1999	Hlavinka et al.	
5,876,611	A	3/1999	Shettigar	
5,879,280	A	3/1999	Hlavinka et al.	
5,882,289	A	3/1999	Sakota et al.	
5,904,645	A	5/1999	Hlavinka	
5,906,570	A	5/1999	Langley et al.	
5,913,768	A	6/1999	Langley et al.	
5,939,319	A	8/1999	Hlavinka et al.	
5,951,877	A	9/1999	Langley et al.	
5,958,250	A *	9/1999	Brown et al.	494/37
5,961,842	A	10/1999	Min et al.	
5,964,724	A	10/1999	Rivera et al.	
5,971,948	A	10/1999	Pages et al.	
6,007,509	A	12/1999	Kingsley et al.	
6,022,306	A	2/2000	Dumont et al.	
6,027,655	A	2/2000	Holm	
6,027,657	A	2/2000	Min et al.	
6,051,146	A	4/2000	Green et al.	
6,053,856	A	4/2000	Hlavinka	
6,063,297	A	5/2000	Antanavich et al.	
6,071,422	A	6/2000	Hlavinka et al.	
6,071,423	A	6/2000	Brown et al.	
6,099,491	A	8/2000	Headley et al.	
6,102,883	A	8/2000	Kingsley et al.	
6,106,727	A	8/2000	Krasnoff et al.	
6,113,554	A	9/2000	Gilcher et al.	
6,127,656	A	10/2000	Blakeslee et al.	
6,179,801	B1	1/2001	Holmes et al.	
6,196,987	B1	3/2001	Holmes et al.	
6,200,287	B1	3/2001	Keller et al.	
6,234,989	B1	5/2001	Brierton et al.	
6,251,284	B1	6/2001	Bishof et al.	
6,267,925	B1	7/2001	Pages	
6,296,602	B1	10/2001	Headley	
6,312,607	B1	11/2001	Brown et al.	
6,315,709	B1	11/2001	Garibaldi et al.	
6,322,488	B1	11/2001	Westberg et al.	
6,322,709	B1	11/2001	Krasnoff et al.	
6,334,842	B1	1/2002	Hlavinka et al.	
6,348,156	B1	2/2002	Vishnoi et al.	
6,354,986	B1	3/2002	Hlavinka et al.	
6,361,518	B1	3/2002	Brierton et al.	
6,361,700	B2	3/2002	Gates et al.	
6,379,322	B1	4/2002	Kingsley et al.	
6,387,263	B1	5/2002	Bhaskar et al.	
6,398,972	B1	6/2002	Blasetti et al.	
6,402,702	B1	6/2002	Gilcher et al.	
6,440,372	B1	8/2002	Pages	
6,464,624	B2	10/2002	Pages	
6,471,855	B1	10/2002	Odak et al.	
6,475,175	B1	11/2002	Rivera et al.	
6,497,674	B1	12/2002	Steele et al.	
6,524,231	B1	2/2003	Westberg et al.	
6,537,445	B2	3/2003	Muller	
6,558,307	B2	5/2003	Headley	
6,582,349	B1	6/2003	Cantu et al.	
6,596,180	B2	7/2003	Baugh et al.	
6,605,223	B2	8/2003	Jorgensen et al.	
6,610,002	B2	8/2003	Dolecek	
6,613,009	B1	9/2003	Bainbridge et al.	
6,632,191	B1	10/2003	Headley et al.	
6,641,552	B1	11/2003	Kingsley et al.	
6,649,072	B2	11/2003	Brandt et al.	
6,652,476	B2	11/2003	Langley et al.	
6,695,803	B1	2/2004	Robinson et al.	
6,705,983	B1	3/2004	Rochat	
6,706,008	B2	3/2004	Vishnoi et al.	
6,709,377	B1	3/2004	Rochat	
6,730,055	B2	5/2004	Bainbridge et al.	
6,736,768	B2	5/2004	Felt et al.	
6,743,192	B1	6/2004	Sakota et al.	
6,752,777	B1	6/2004	Takagi et al.	
6,773,389	B2	8/2004	Hlavinka et al.	
6,773,413	B2	8/2004	Keller et al.	
6,790,371	B2	9/2004	Dolecek	
6,800,054	B2	10/2004	Westberg et al.	
6,802,982	B2	10/2004	Brown	
6,849,039	B2	2/2005	Min et al.	
6,855,119	B2	2/2005	Rivera et al.	
6,875,191	B2	4/2005	Smith et al.	
6,890,291	B2	5/2005	Robinson et al.	
6,899,666	B2	5/2005	Brown	
6,899,813	B2	5/2005	Dolecek et al.	
6,902,539	B2	6/2005	Bainbridge et al.	
6,945,948	B2	9/2005	Bainbridge et al.	
6,982,038	B2	1/2006	Dolecek et al.	
6,994,790	B2	2/2006	Corbin, III et al.	
7,008,393	B2	3/2006	Robinson et al.	
7,011,761	B2	3/2006	Muller	
7,029,430	B2	4/2006	Hlavinka et al.	
7,033,512	B2	4/2006	Hlavinka et al.	
7,037,428	B1	5/2006	Robinson et al.	
7,044,941	B2	5/2006	Mathias et al.	

7,087,177	B2	8/2006	Min et al.
7,094,197	B2	8/2006	Hlavinka et al.
7,115,205	B2	10/2006	Robinson et al.
7,166,217	B2	1/2007	Holmes et al.
7,211,037	B2	5/2007	Briggs et al.
7,297,272	B2	11/2007	Min et al.
7,332,125	B2	2/2008	Cianci et al.
2001/0000185	A1	4/2001	Keller et al.
2001/0048892	A1	12/2001	Bainbridge et al.
2001/0051569	A1	12/2001	Headley
2002/0011452	A1	1/2002	Mari et al.
2002/0014462	A1	2/2002	Muller
2002/0020680	A1	2/2002	Jorgensen
2002/0033370	A1	3/2002	Bainbridge et al.
2002/0058575	A1	5/2002	Hlavinka et al.
2002/0090319	A1	7/2002	Vandlik et al.
2002/0104808	A1	8/2002	Blasetti et al.
2002/0128581	A1	9/2002	Vishnoi et al.
2002/0128583	A1	9/2002	Min et al.
2002/0128584	A1	9/2002	Brown et al.
2002/0142909	A1	10/2002	Sakota
2002/0147094	A1	10/2002	Dolecek
2002/0177799	A1	11/2002	Rivera et al.
2002/0183677	A1	12/2002	Chang et al.
2003/0052065	A1	3/2003	Rosiello
2003/0066807	A1	4/2003	Suzuki
2003/0102272	A1	6/2003	Brown
2003/0155312	A1	8/2003	Ivansons et al.
2003/0181305	A1	9/2003	Briggs et al.
2003/0191005	A1	10/2003	Coelho et al.
2003/0195455	A1	10/2003	Bainbridge et al.
2003/0205538	A1	11/2003	Dorian et al.
2003/0211927	A1	11/2003	Cantu et al.
2003/0233064	A1	12/2003	Arm et al.
2004/0026341	A1	2/2004	Hogberg et al.
2004/0065626	A1	4/2004	Woo
2004/0079707	A1	4/2004	Smith et al.
2004/0082459	A1	4/2004	Min et al.
2004/0104182	A1	6/2004	Holmes et al.
2004/0124157	A1	7/2004	Briggs et al.
2004/0127841	A1	7/2004	Briggs
2004/0147865	A1	7/2004	Cianci et al.
2004/0185998	A1	9/2004	Hlavinka et al.
2004/0195190	A1	10/2004	Min et al.
2004/0222168	A1	11/2004	Frey et al.
2004/0230152	A1	11/2004	Bainbridge et al.
2004/0236263	A1	11/2004	Van Waeg et al.
2004/0245189	A1	12/2004	Robinson et al.
2004/0249332	A1	12/2004	Bainbridge et al.
2004/0256318	A1	12/2004	Iida et al.
2005/0010158	A1	1/2005	Brugger et al.
2005/0029190	A1	2/2005	Effenhauser et al.
2005/0045567	A1	3/2005	Holmes et al.
2005/0082237	A1	4/2005	Dolecek et al.
2005/0137516	A1	6/2005	Min et al.
2005/0203469	A1	9/2005	Bobroff et al.
2006/0043007	A1	3/2006	Tarumi et al.
2006/0058167	A1	3/2006	Ragusa et al.
2006/0067857	A1	3/2006	Samolyk
2006/0186061	A1	8/2006	Briggs et al.
2006/0189469	A1	8/2006	Briggs et al.
2006/0226090	A1	10/2006	Robinson et al.
2007/0140898	A1	6/2007	Olsen et al.
2007/0140899	A1	6/2007	Olsen et al.

* cited by examiner

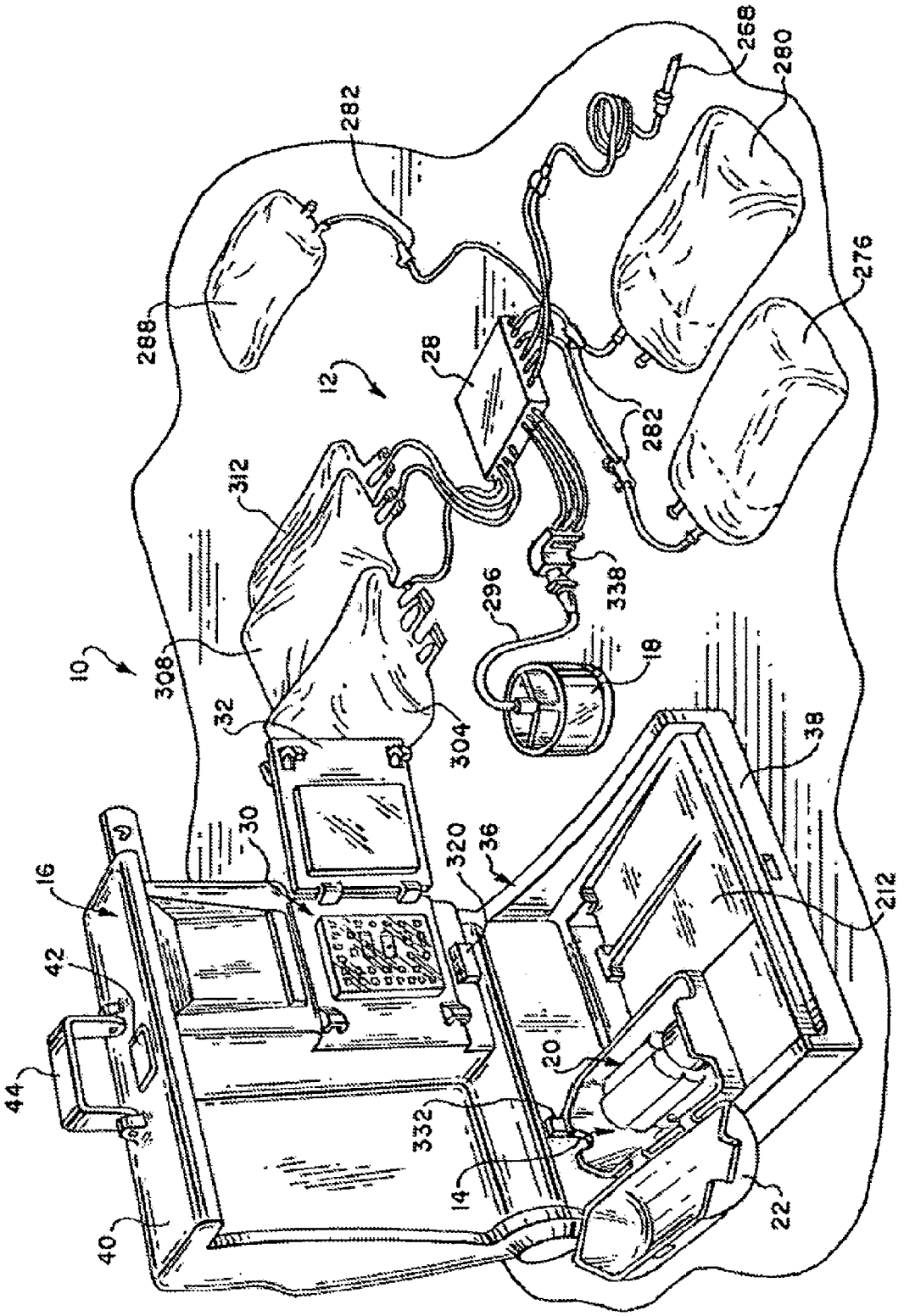
10
12
14
16
18
20
22
28
30
32
36
38
40
42
44
212
258
276
280
282
288
296
304
308
312
320
332
338

FIG. 1

FIG. 2

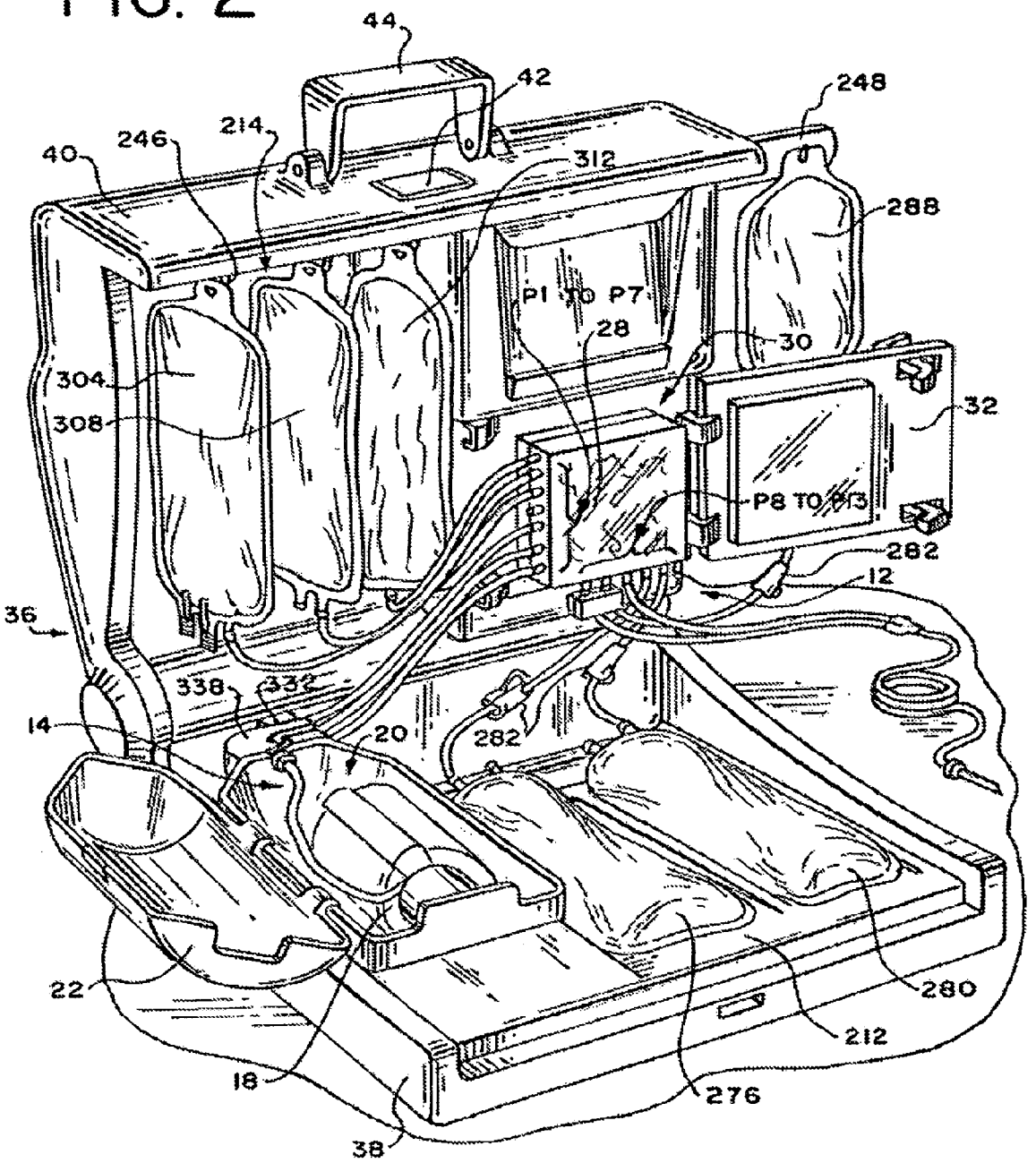
44
42
248
40
246
214
312
288
P1 TO P7
28
30
304
308
32
P8 TO P13
282
12
36
338
332
14
20
282
22
280
212
18
276
38

FIG. 3

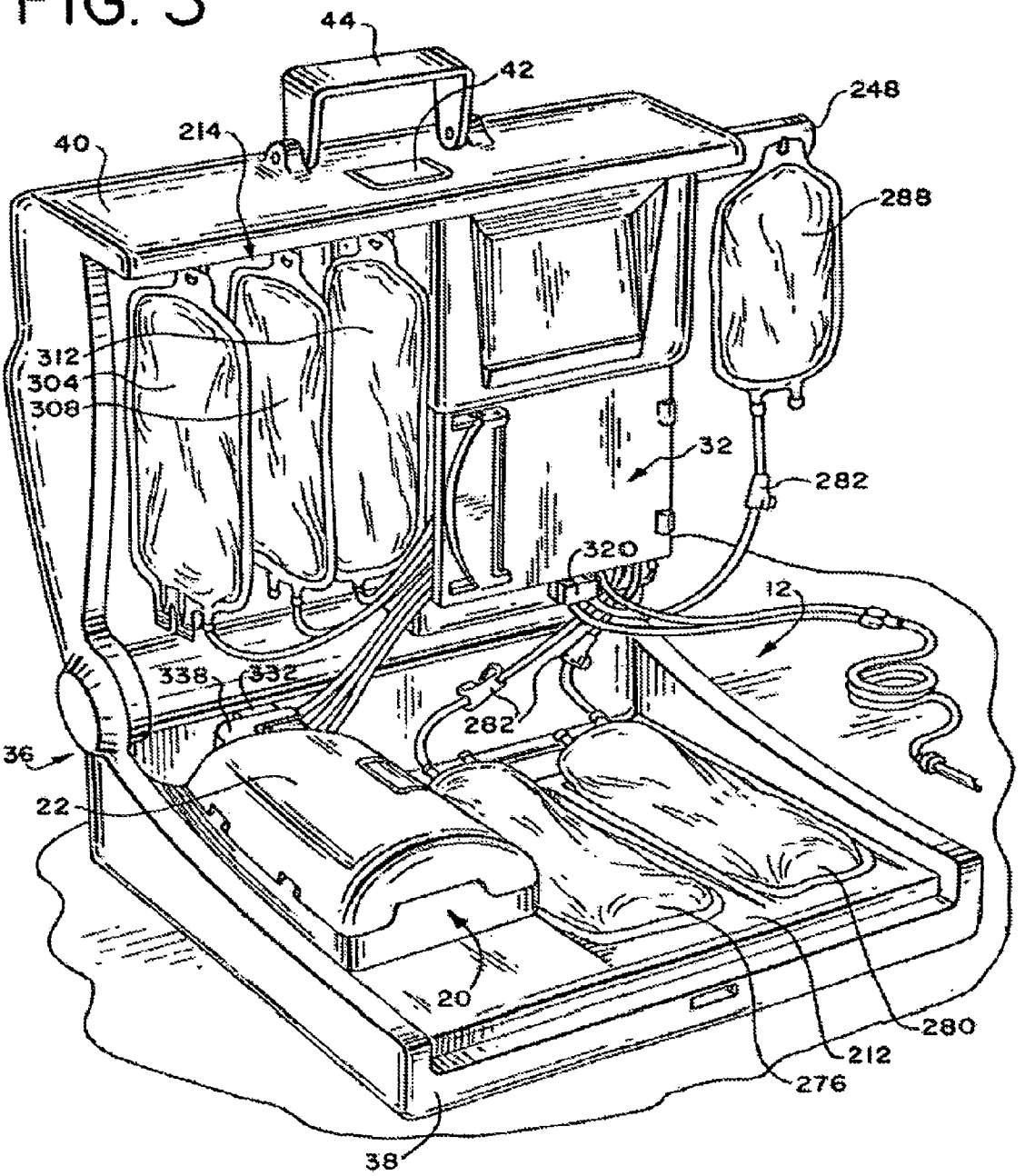
44
42
248
40
214
288
312
304
308
32
282
320
12
338
332
282
36
22
20
280
212
276
38

FIG. 4

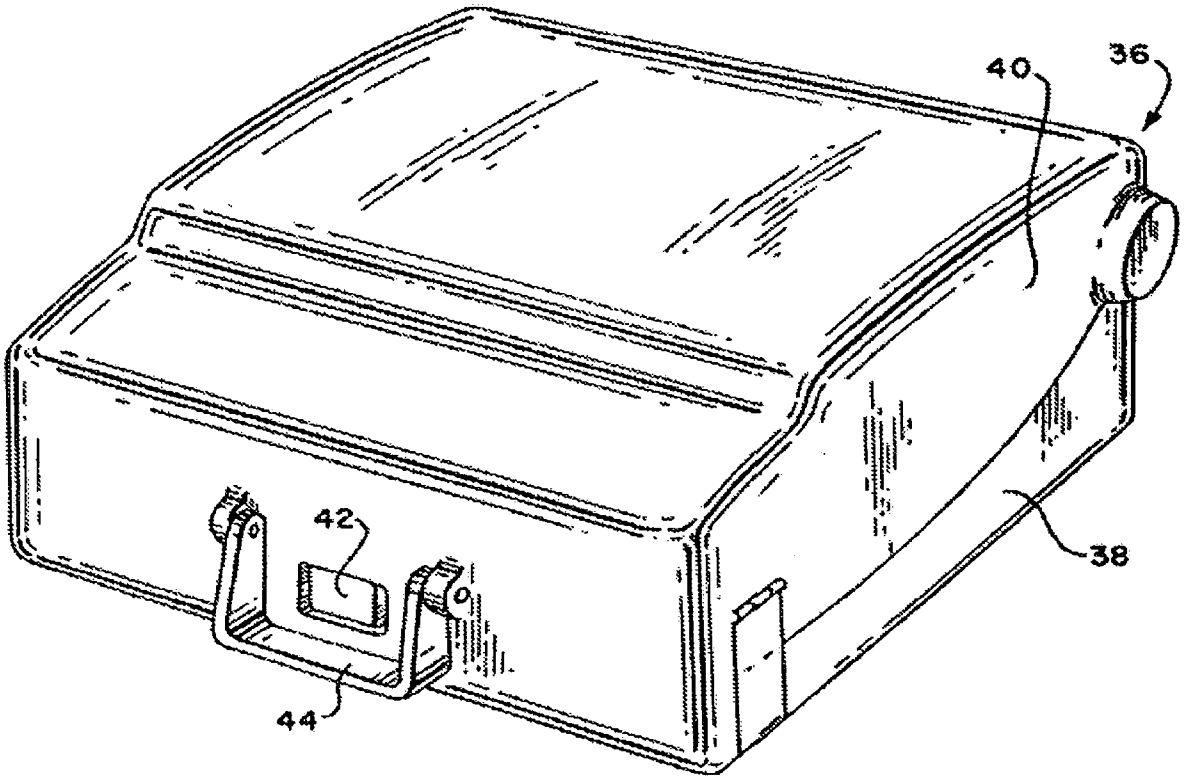

FIG. 5

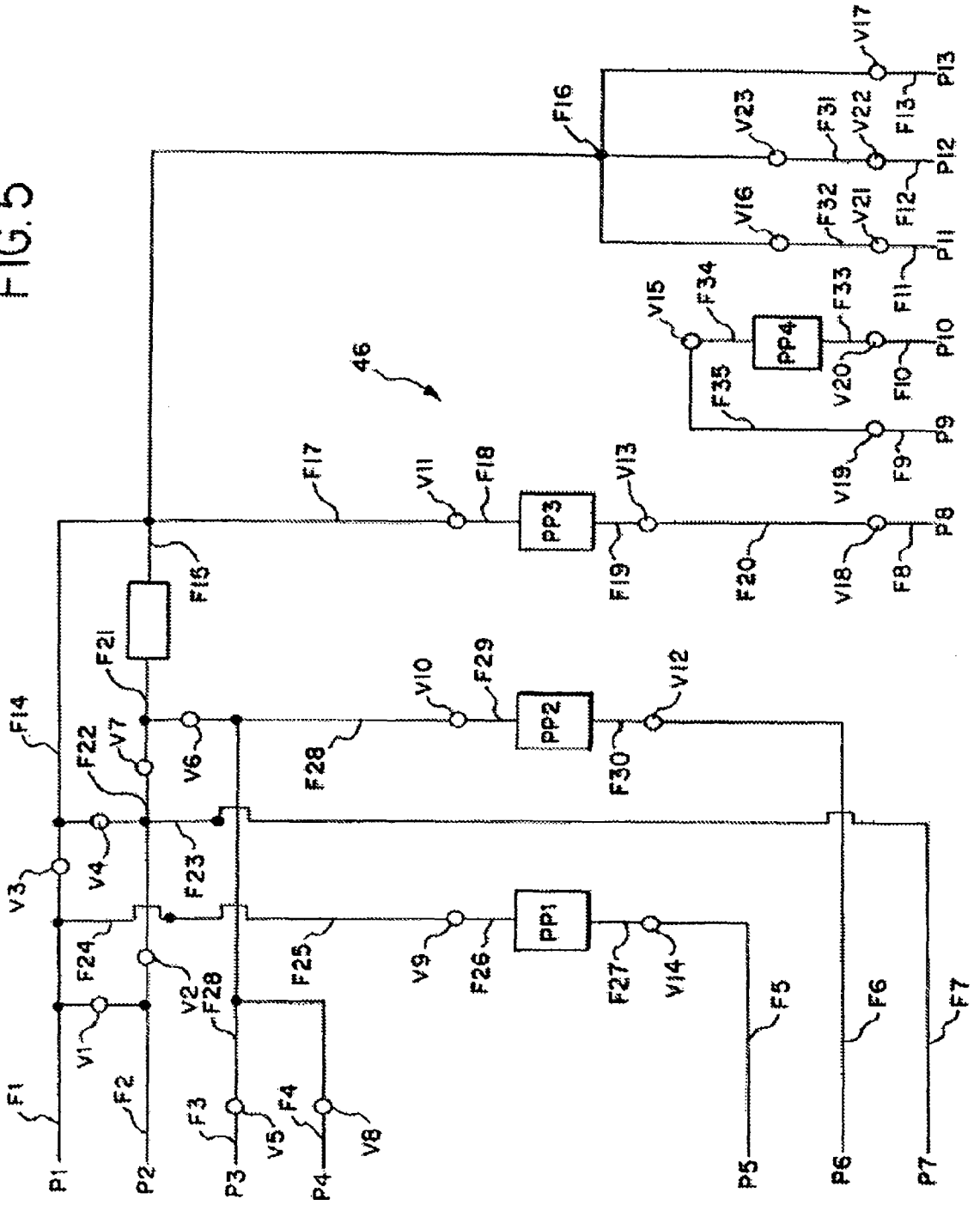
46
PP1
PP2
PP3
PP4
F1
F2
F3
F4
F5
F6
F7
F8
F9
F10
F11
F12
F13
F14
F15
F16
F17
F18
F19
F20
F21
F22
F23
F24
F25
F26
F27
F28
F29
F30
F31
F32
F33
F34
F35
V1
V2
V3
V4
V5
V6
V7
V8
V9
V10
V11
V12
V13
V14
V15
V16
V17
V18
V19
V20
V21
V22
V23
P1
P2
P3
P4
P5
P6
P7
P8
P9
P10
P11
P12
P13

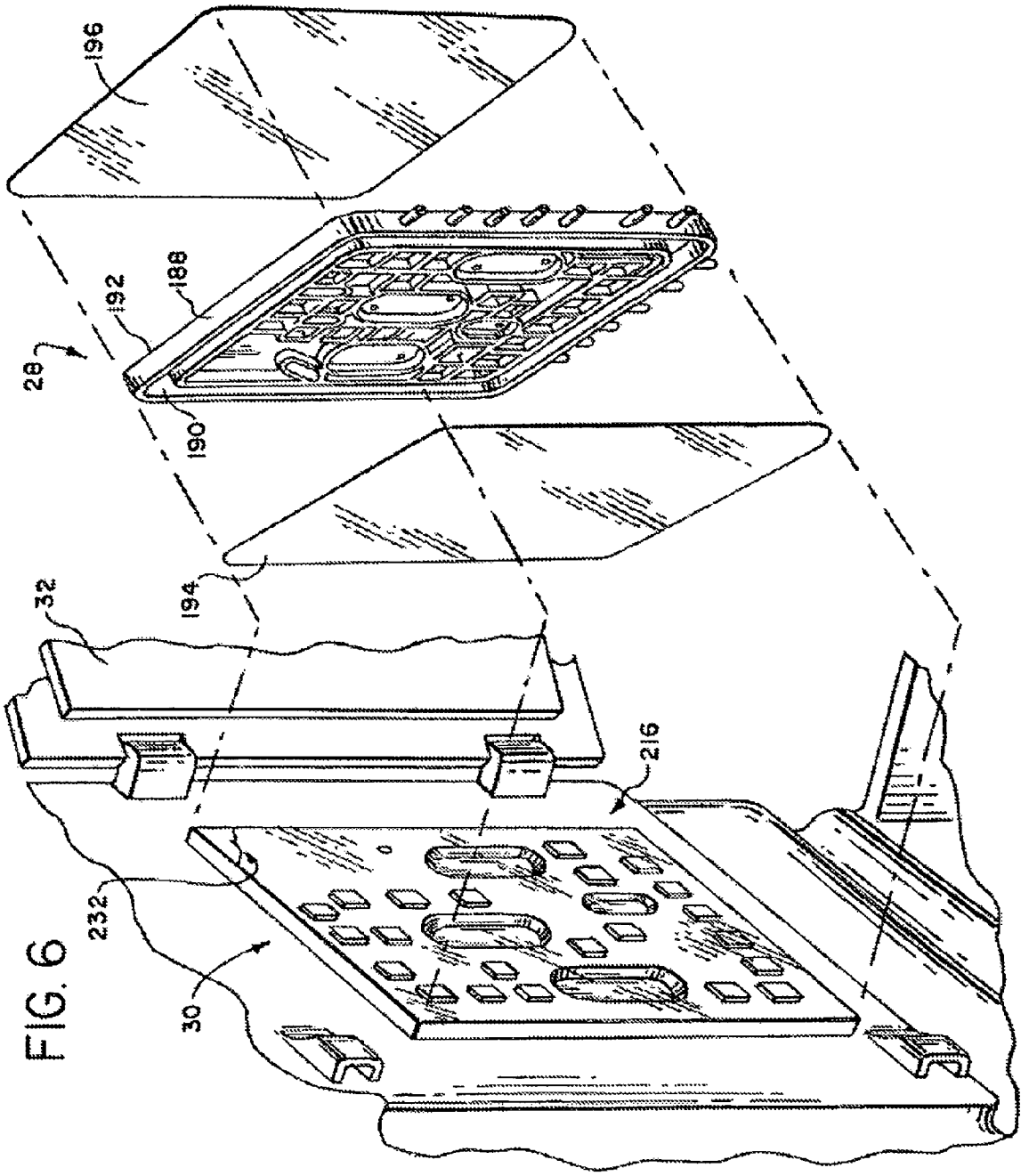

FIG. 6

FIG. 7

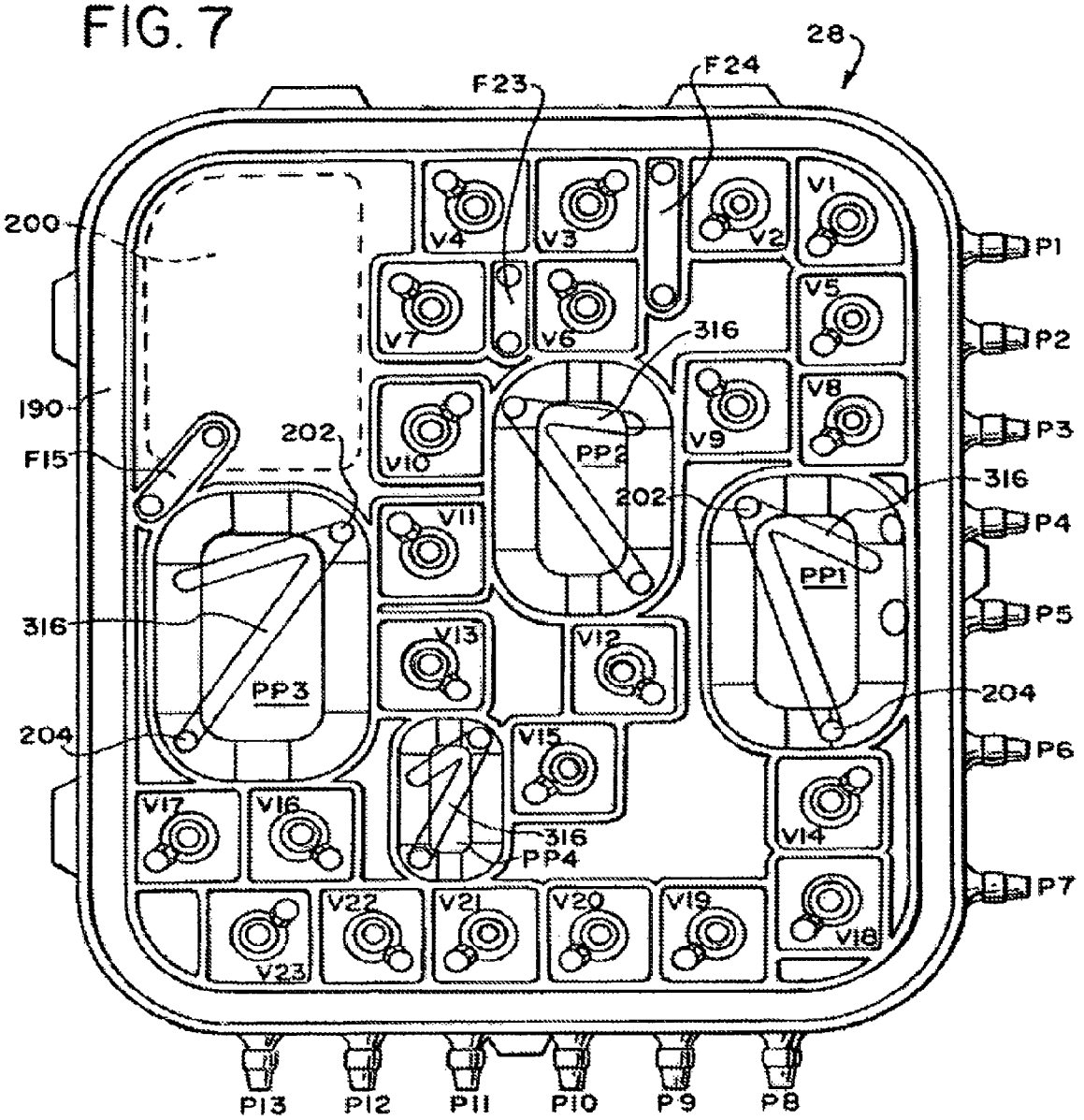
28
F23
F24
200
190
F15
202
316
204
PP1
PP2
PP3
PP4
V1
V2
V3
V4
V5
V6
V7
V8
V9
V10
V11
V12
V13
V14
V15
V16
V17
V18
V19
V20
V21
V22
V23
P1
P2
P3
P4
P5
P6
P7
P8
P9
P10
P11
P12
P13

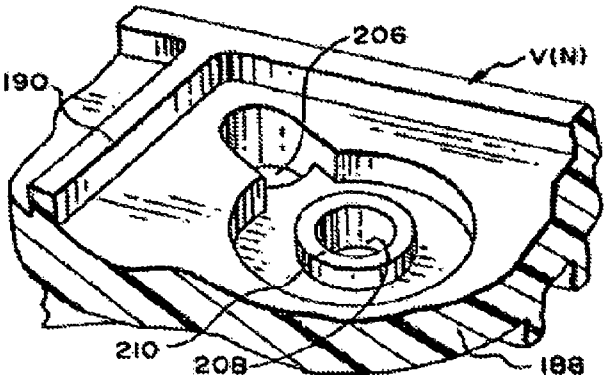
206
V(N)
190
210
208
188

FIG. 8

FIG. 9

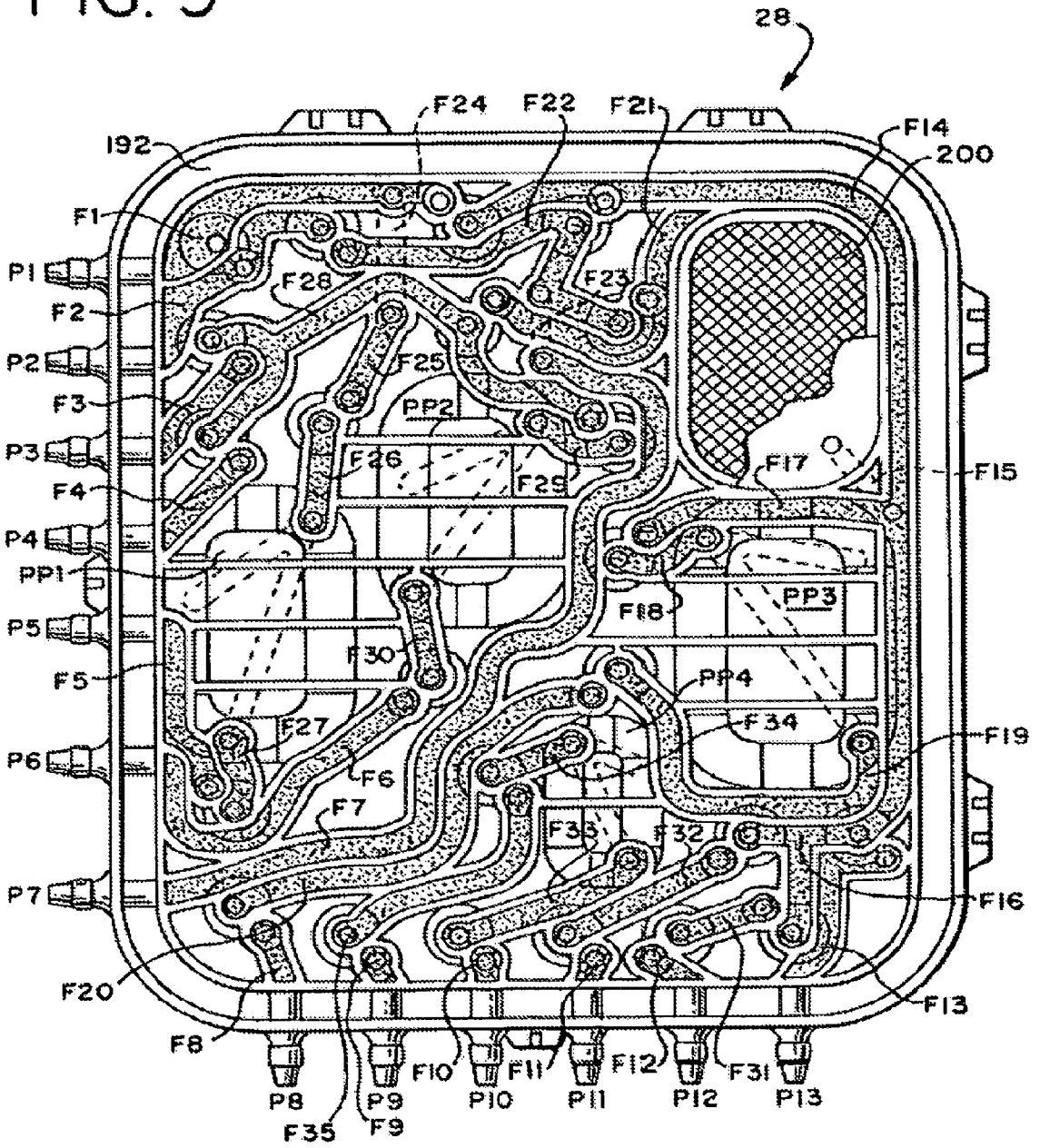
28
F24
F22
F21
F14
192
200
F1
P1
F28
F23
F2
P2
F25
F3
PP2
P3
F26
F29
F17
F15
F4
P4
PP1
F18
PP3
P5
F30
F5
PP4
F27
F34
F19
P6
F6
F7
F33
F32
P7
F16
F20
F13
F8
F10
F11
F12
F31
P8
P9
P10
P11
P12
P13
F35
F9

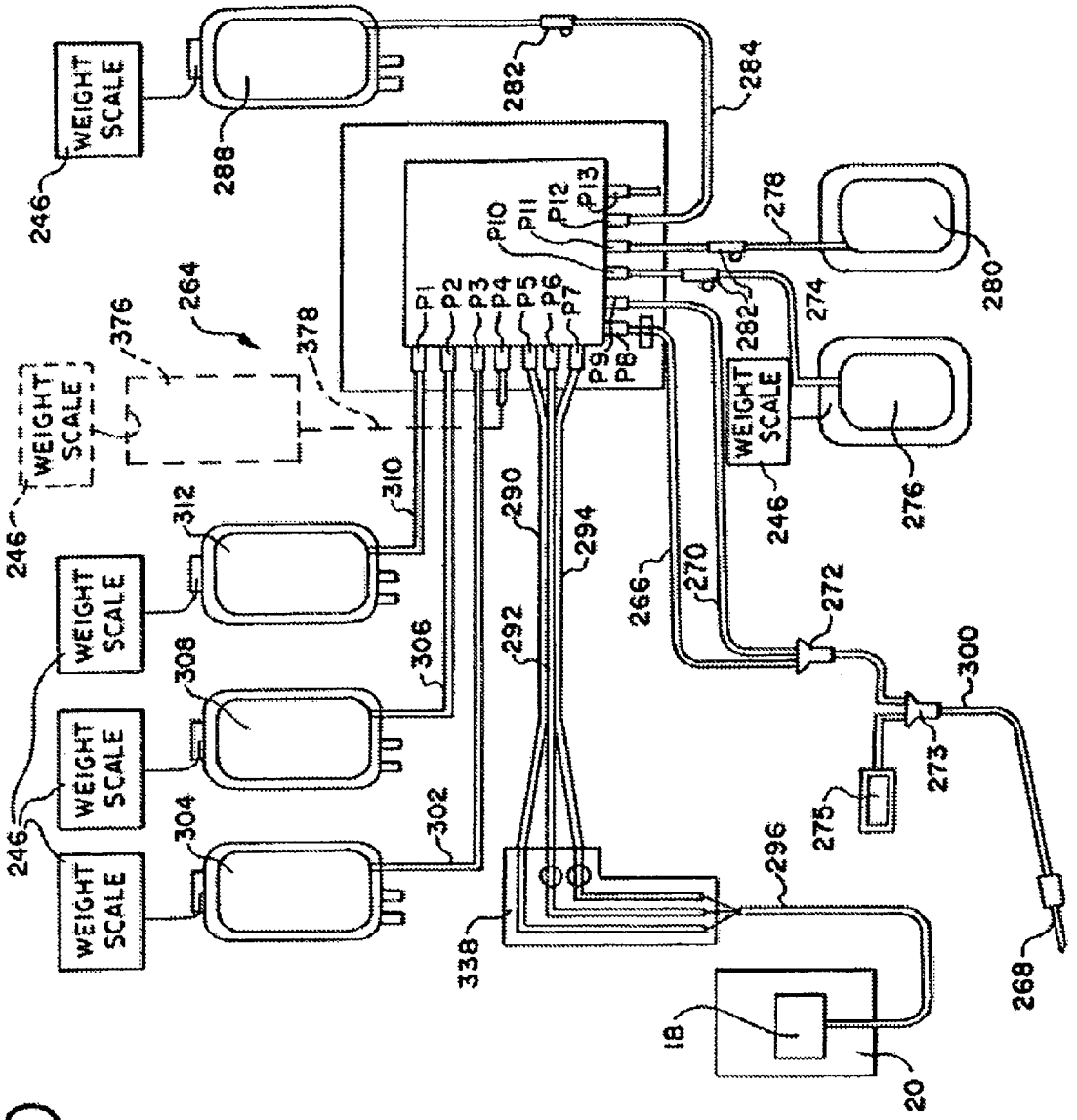
WEIGHT SCALE
246
288
282
284
278
280
274
276
264
376
378
P1
P2
P3
P4
P5
P6
P7
P8
P9
P10
P11
P12
P13
310
312
308
306
304
302
290
292
294
266
270
272
273
275
300
296
338
18
20
268

FIG. 10

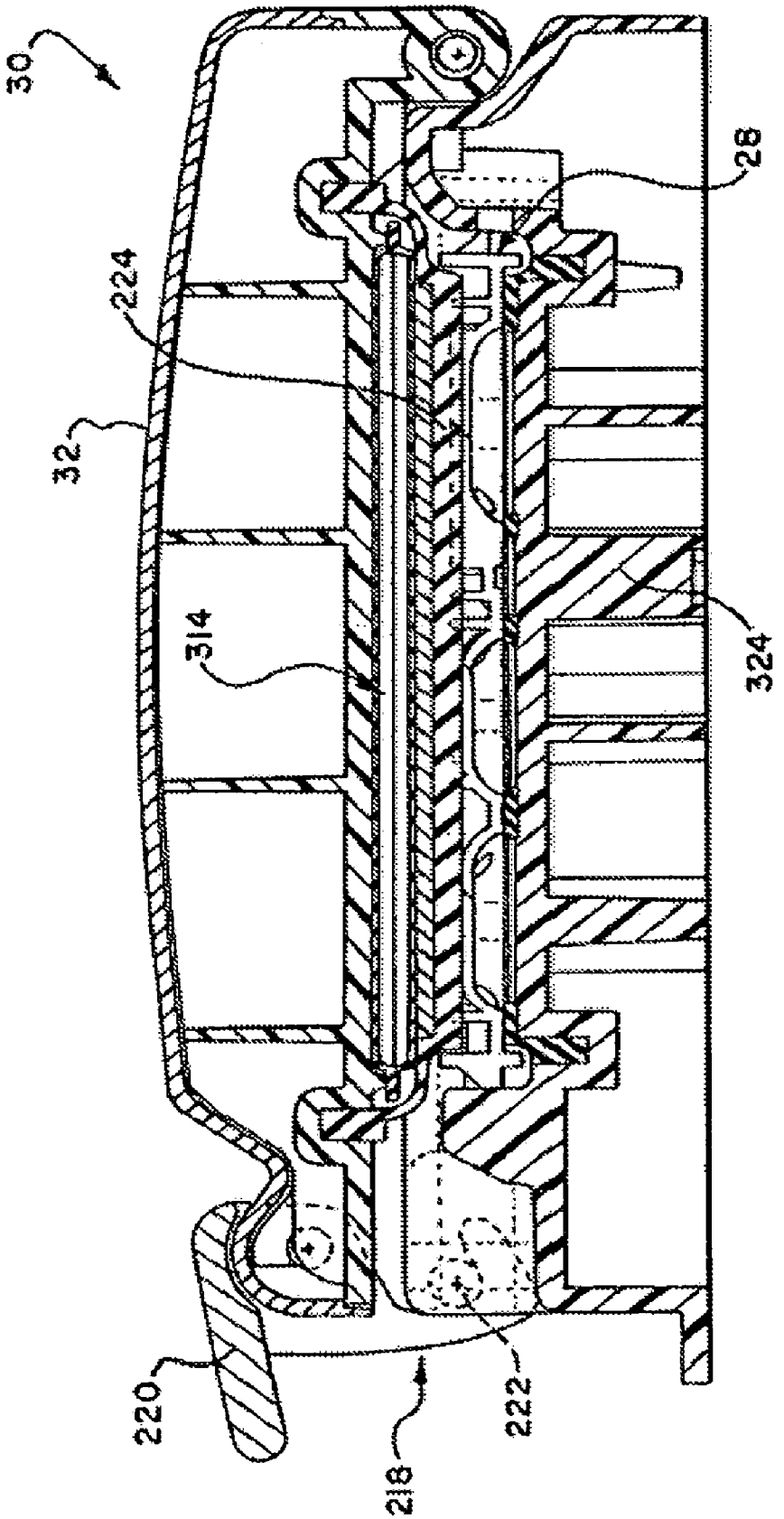

FIG. 11

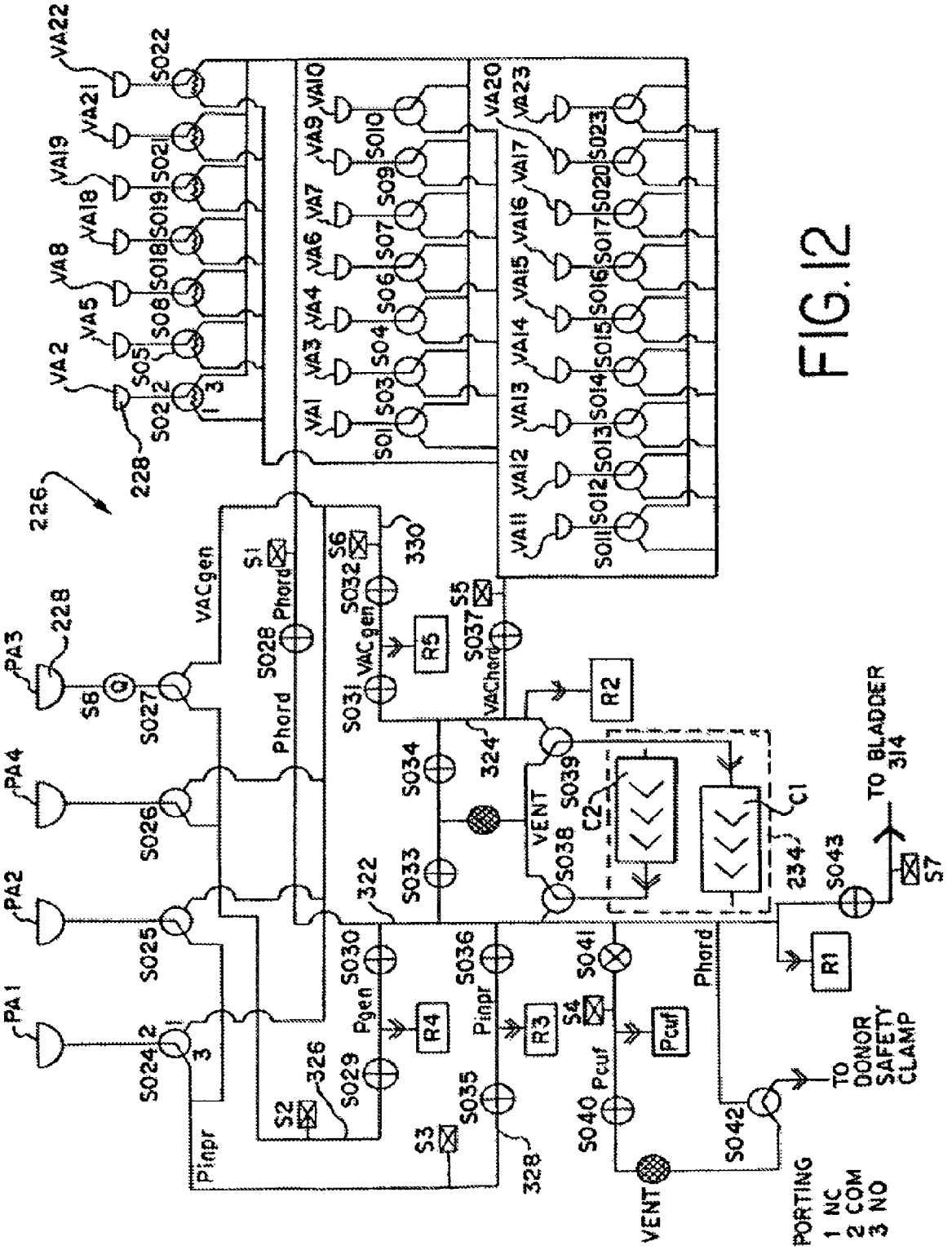
226
228
VA1
VA2
VA3
VA4
VA5
VA6
VA7
VA8
VA9
VA10
VA11
VA12
VA13
VA14
VA15
VA16
VA17
VA18
VA19
VA20
VA21
VA22
VA23
SO1
SO2
SO3
SO4
SO5
SO6
SO7
SO8
SO9
SO10
SO11
SO12
SO13
SO14
SO15
SO16
SO17
SO18
SO19
SO20
SO21
SO22
SO23
PA1
PA2
PA3
PA4
SO24
SO25
SO26
SO27
SO28
SO29
SO30
SO31
SO32
SO33
SO34
SO35
SO36
SO37
SO38
SO39
SO40
SO41
SO42
SO43
S1
S2
S3
S4
S5
S6
S7
S8
VACgen
Phord
Pgen
Pinpr
Pcuf
VACchord
VENT
R1
R2
R3
R4
R5
C1
C2
322
324
326
328
330
234
TO BLADDER 314
TO DONOR SAFETY CLAMP
PORTING
1 NC
2 COM
3 NO

FIG. 12

FIG. 13

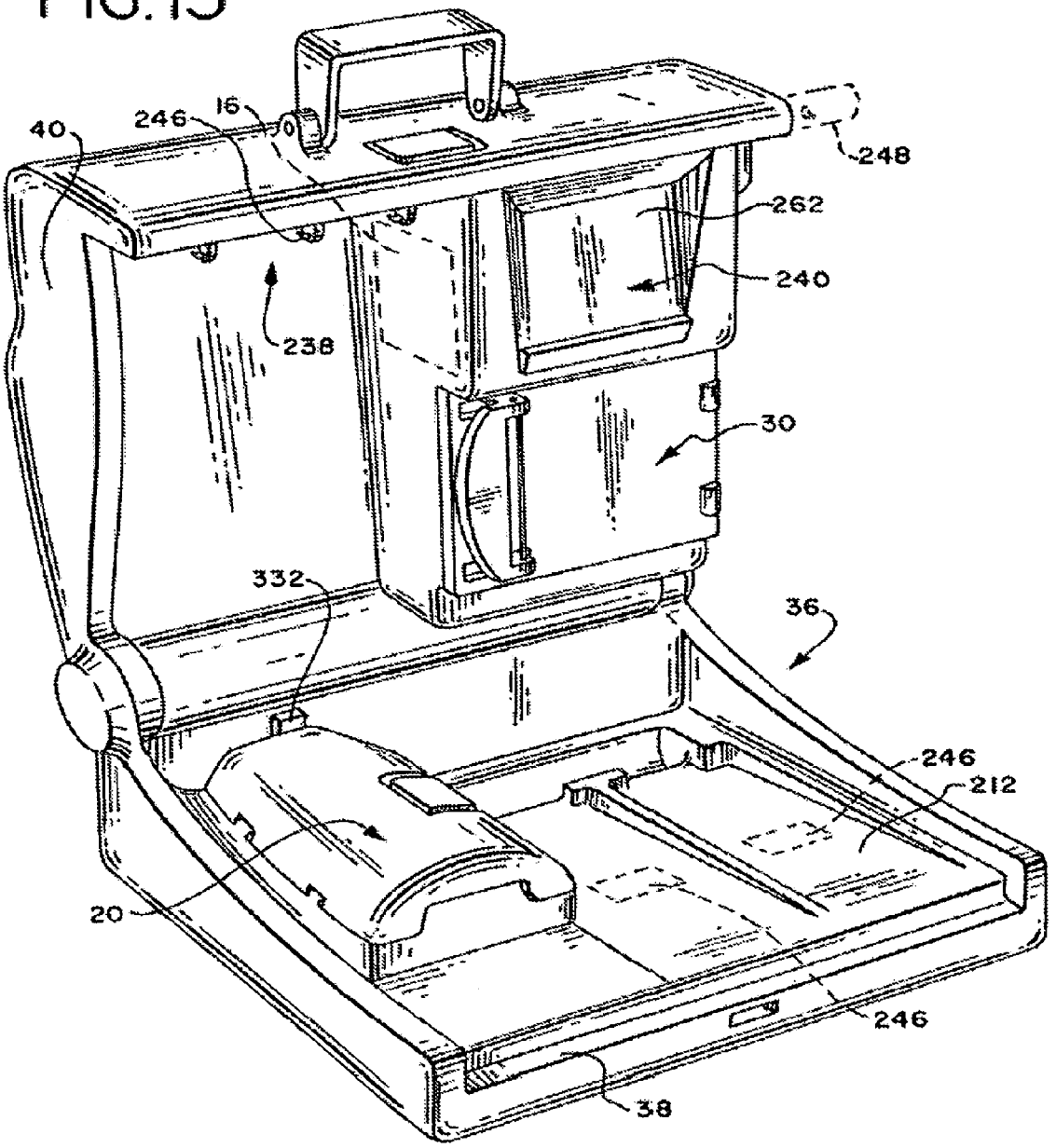

FIG. 14

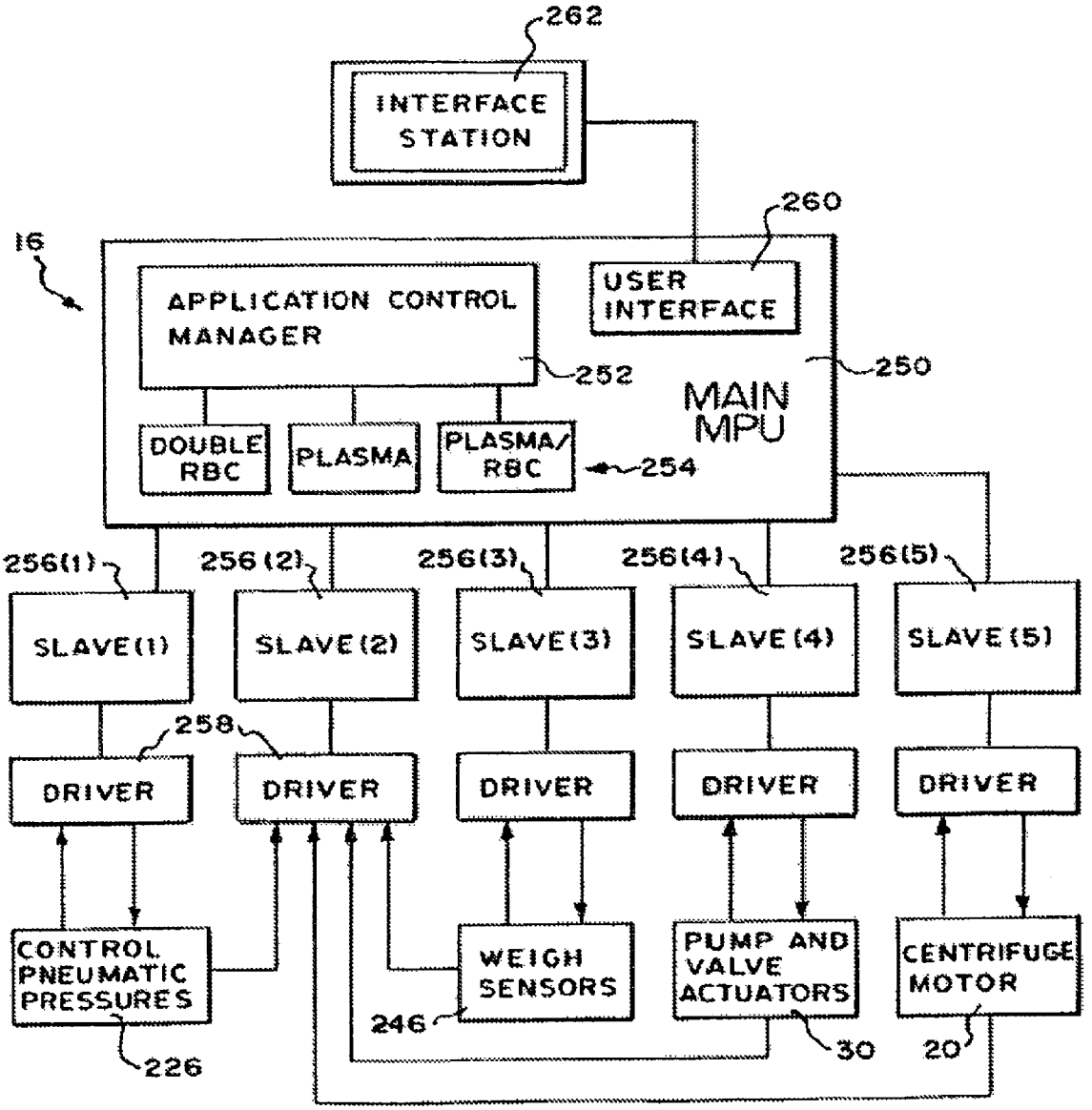
262
INTERFACE STATION
260
16
APPLICATION CONTROL MANAGER
USER INTERFACE
252
250
MAIN MPU
DOUBLE RBC
PLASMA
PLASMA/ RBC
254
256(1)
256(2)
256(3)
256(4)
256(5)
SLAVE(1)
SLAVE(2)
SLAVE(3)
SLAVE(4)
SLAVE(5)
258
DRIVER
DRIVER
DRIVER
DRIVER
DRIVER
CONTROL PNEUMATIC PRESSURES
WEIGH SENSORS
PUMP AND VALVE ACTUATORS
CENTRIFUGE MOTOR
246
226
30
20

FIG. 15A

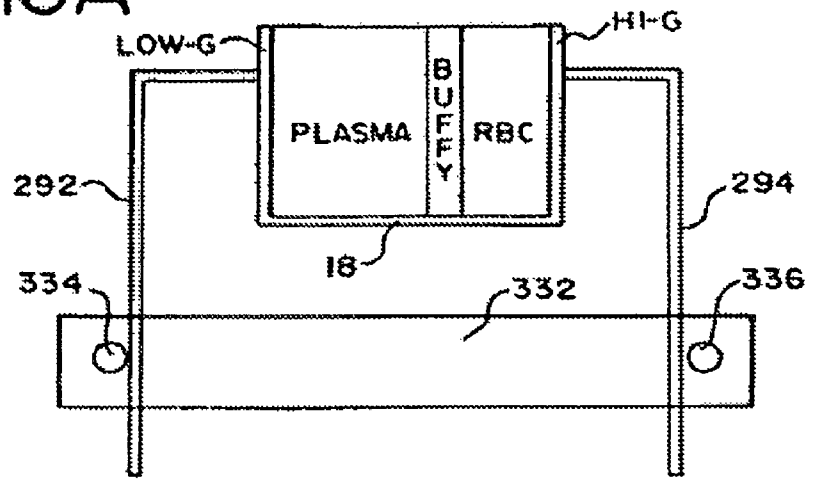

FIG. 15B

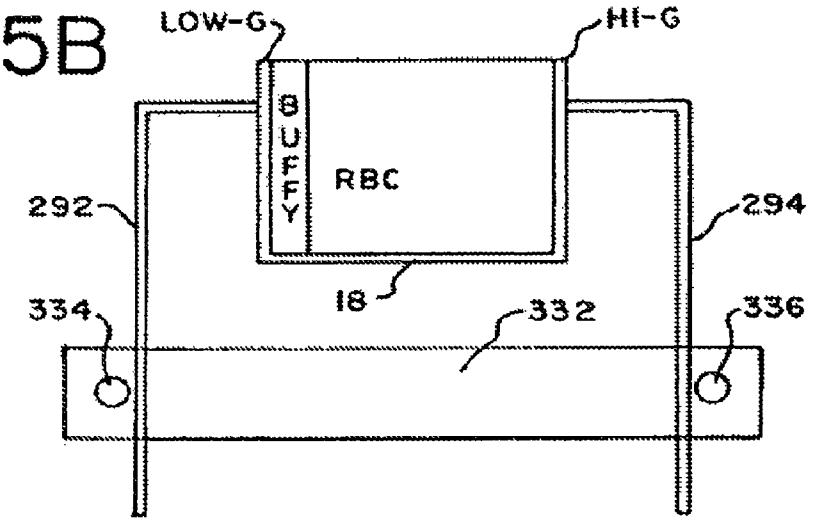

FIG. 15C

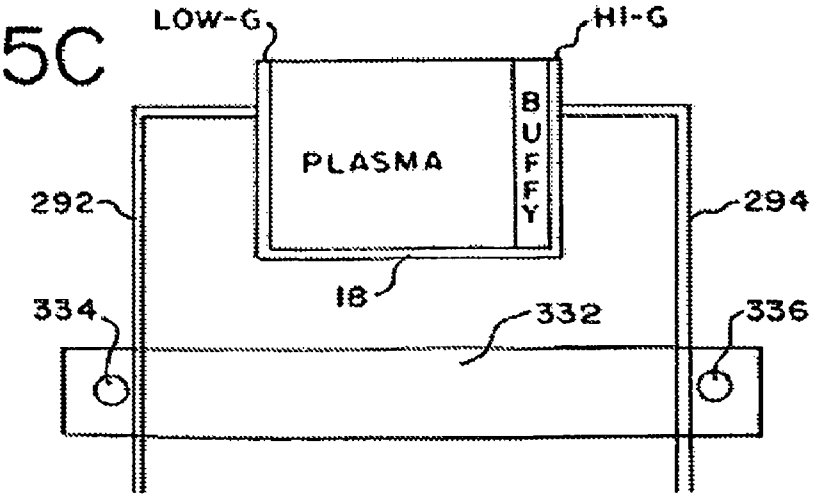

FIG. 16

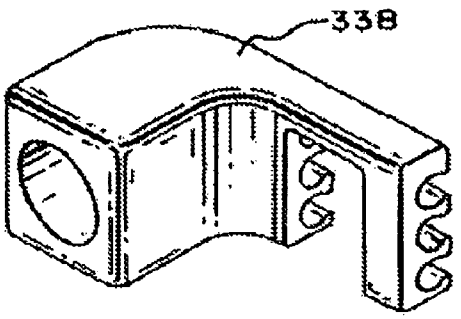

FIG. 17

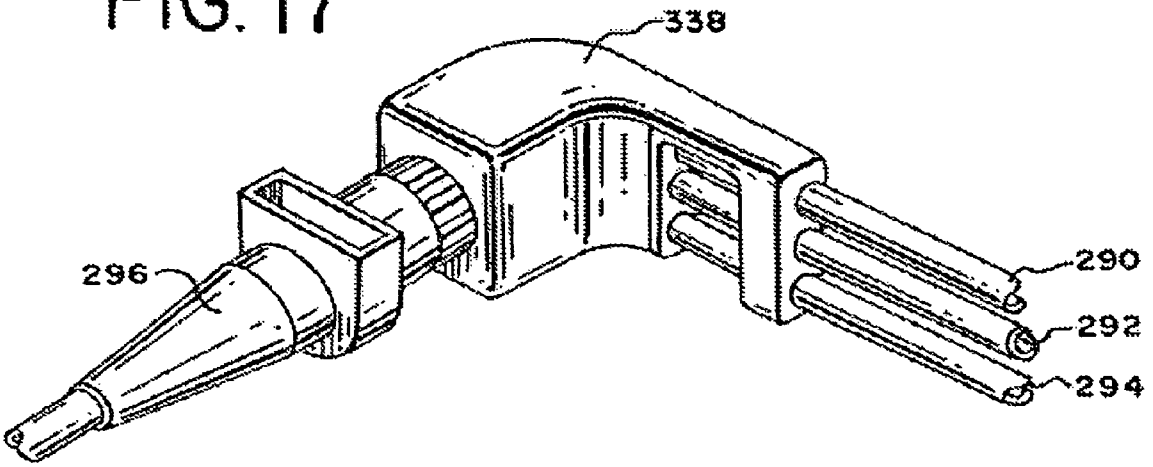

FIG. 18

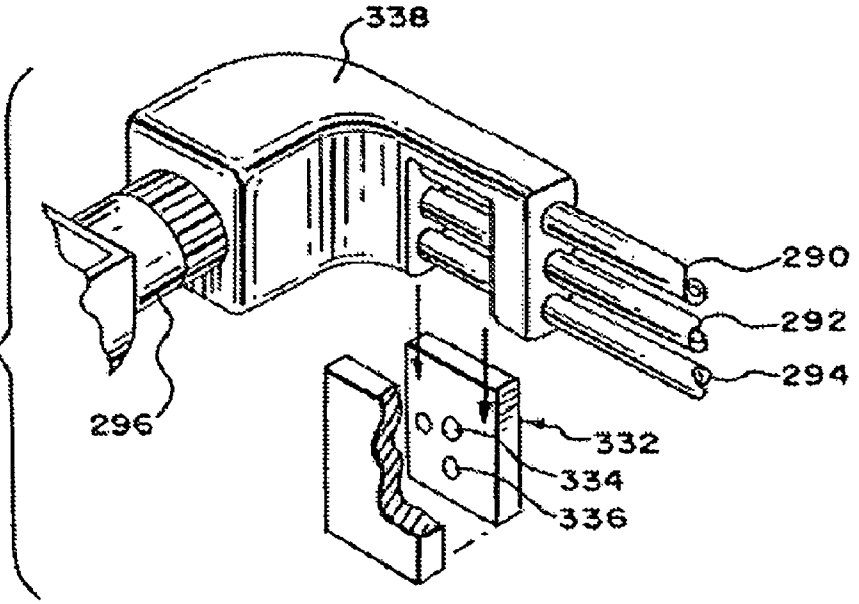

FIG. 19

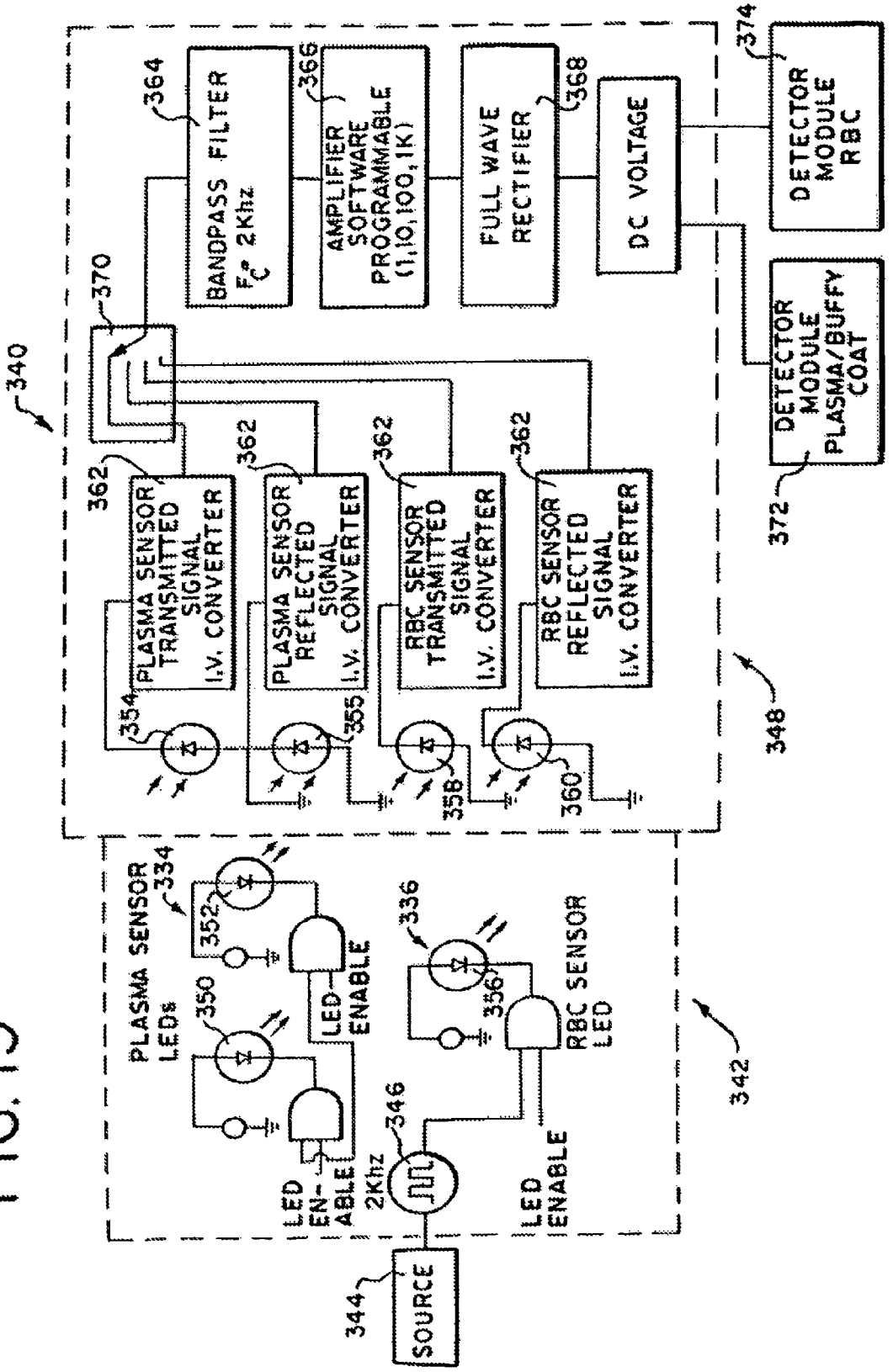
340
370
BANDPASS FILTER
F_C 2Khz
364
AMPLIFIER SOFTWARE PROGRAMMABLE (1,10,100,1K)
366
FULL WAVE RECTIFIER
368
DC VOLTAGE
DETECTOR MODULE RBC
374
DETECTOR MODULE PLASMA/BUFFY COAT
372
PLASMA SENSOR TRANSMITTED SIGNAL I.V. CONVERTER
PLASMA SENSOR REFLECTED SIGNAL I.V. CONVERTER
RBC SENSOR TRANSMITTED SIGNAL I.V. CONVERTER
RBC SENSOR REFLECTED SIGNAL I.V. CONVERTER
362
354
355
358
360
348
PLASMA SENSOR LEDs
334
350
352
LED ENABLE
336
356
RBC SENSOR LED
LED EN-ABLE
2Khz
346
LED ENABLE
342
SOURCE
344

FIG. 20

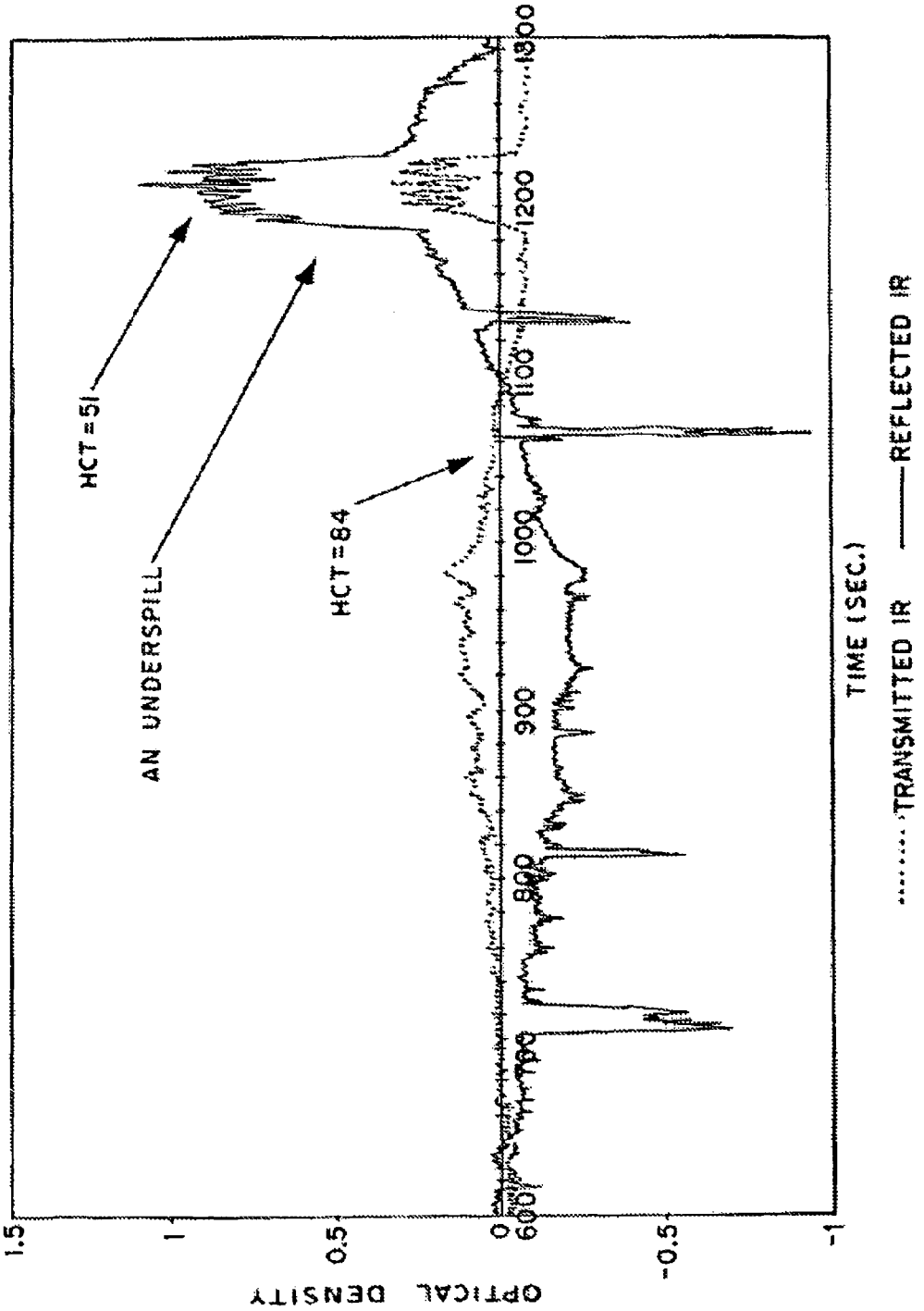
HCT = 51
AN UNDERSPILL
HCT = 84
1.5
1
0.5
0
-0.5
-1
OPTICAL DENSITY
600
700
800
900
1000
1100
1200
1300
TIME (SEC.)
TRANSMITTED IR
REFLECTED IR

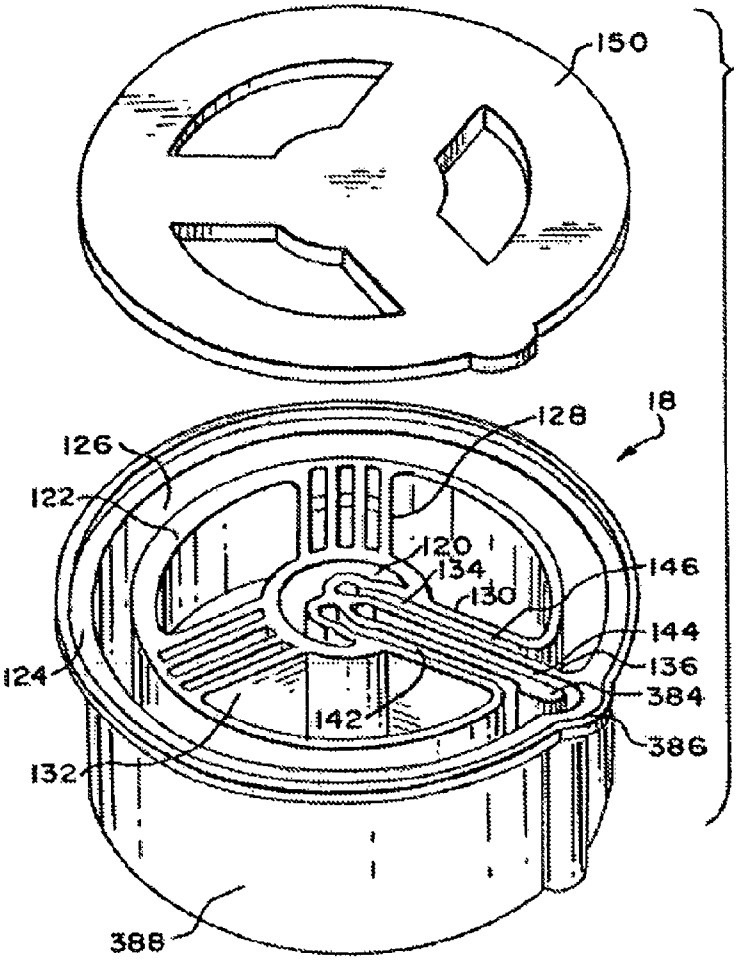
150
18
128
126
122
120
134
130
146
144
136
384
386
124
142
132
388

FIG. 21

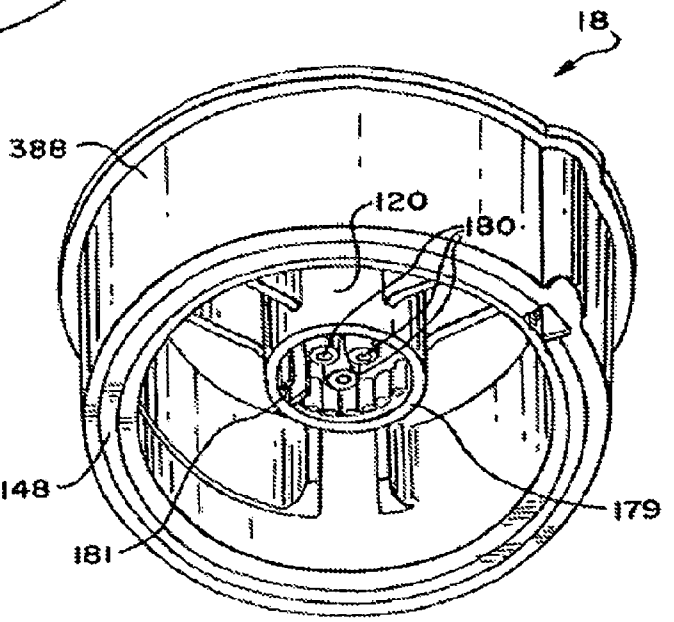
18
388
120
180
148
181
179

FIG. 22

FIG. 23

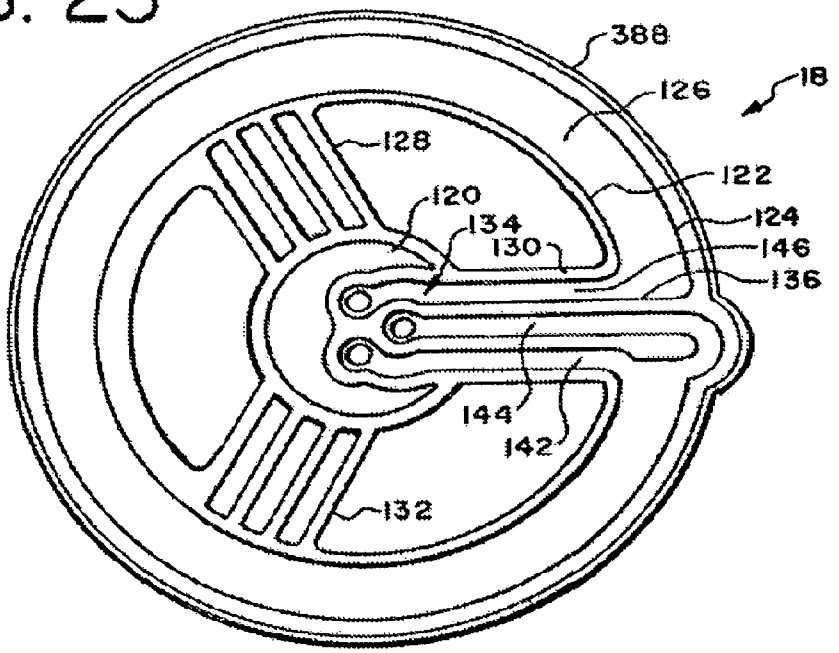

FIG. 24

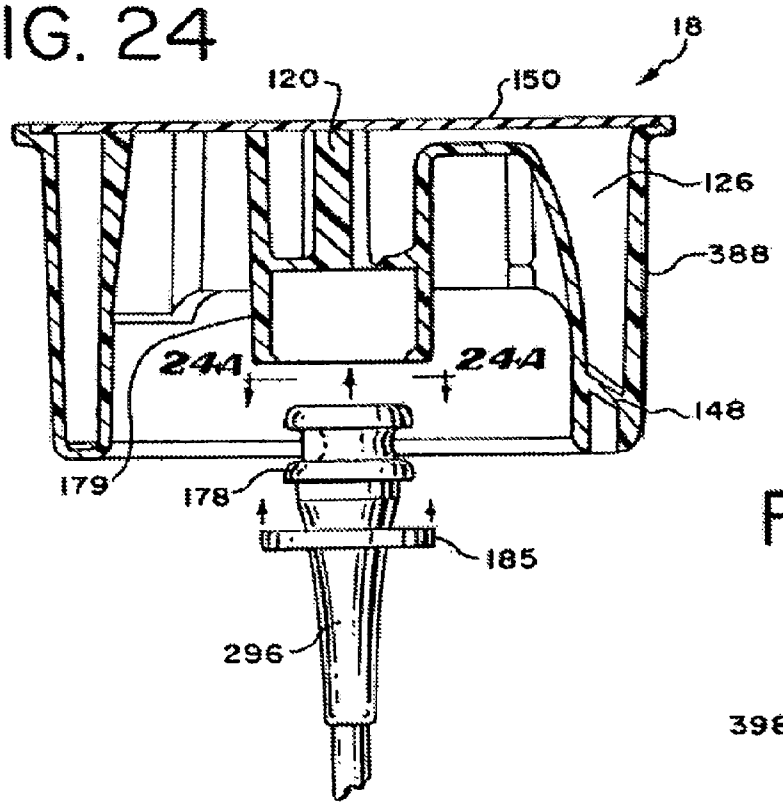

FIG. 24A

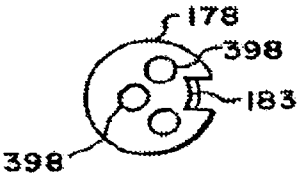

FIG. 25

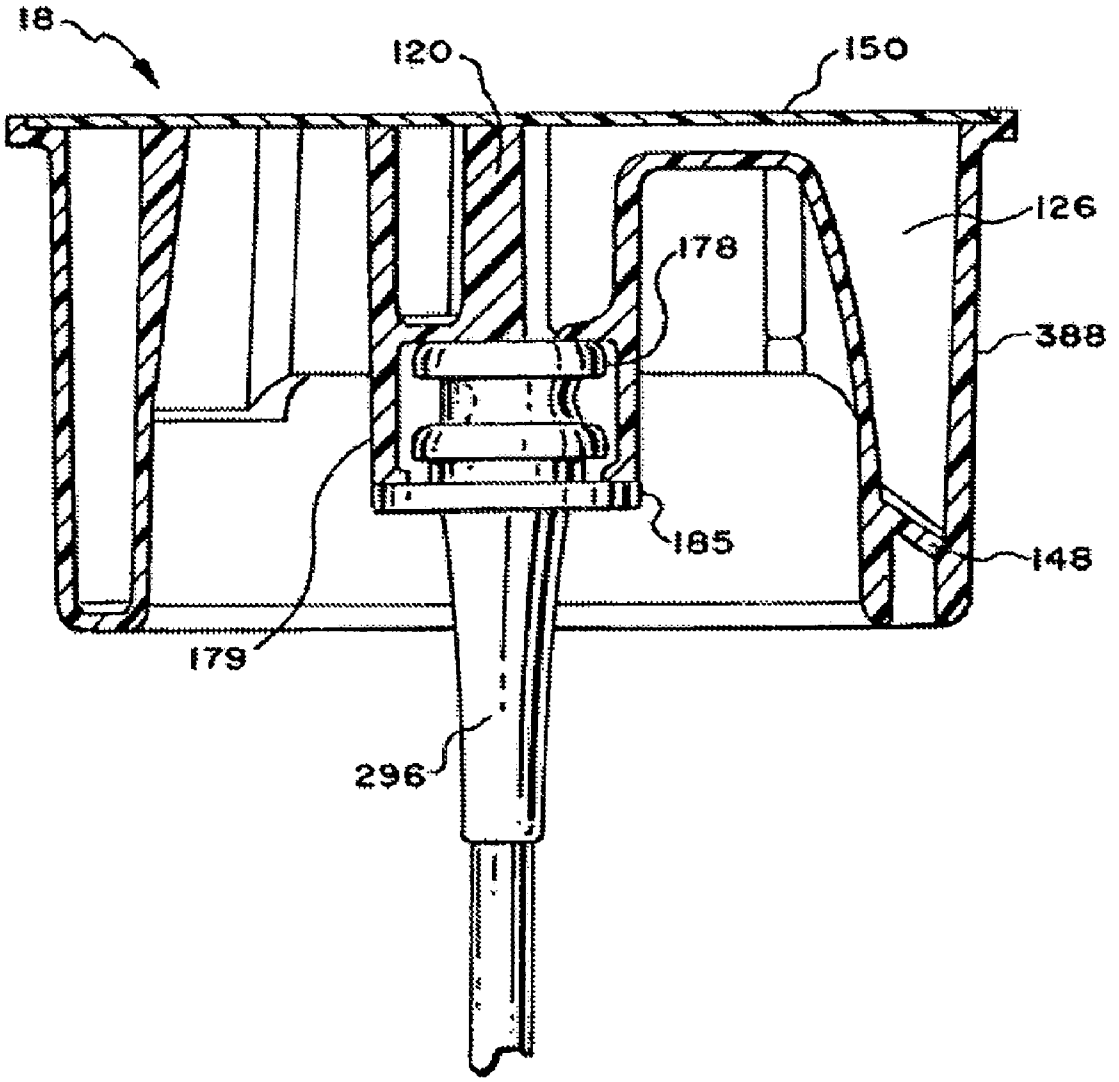

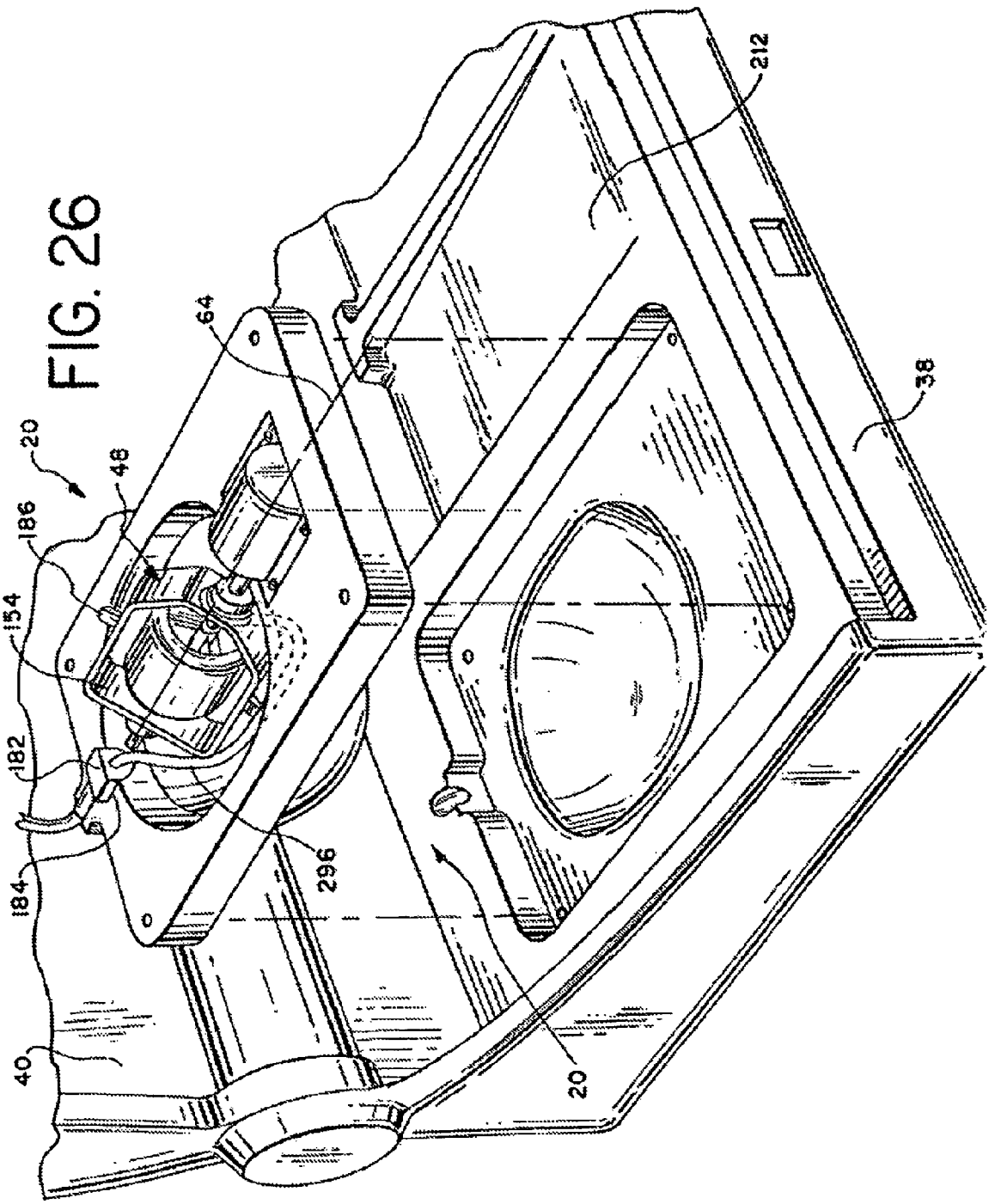

FIG. 26

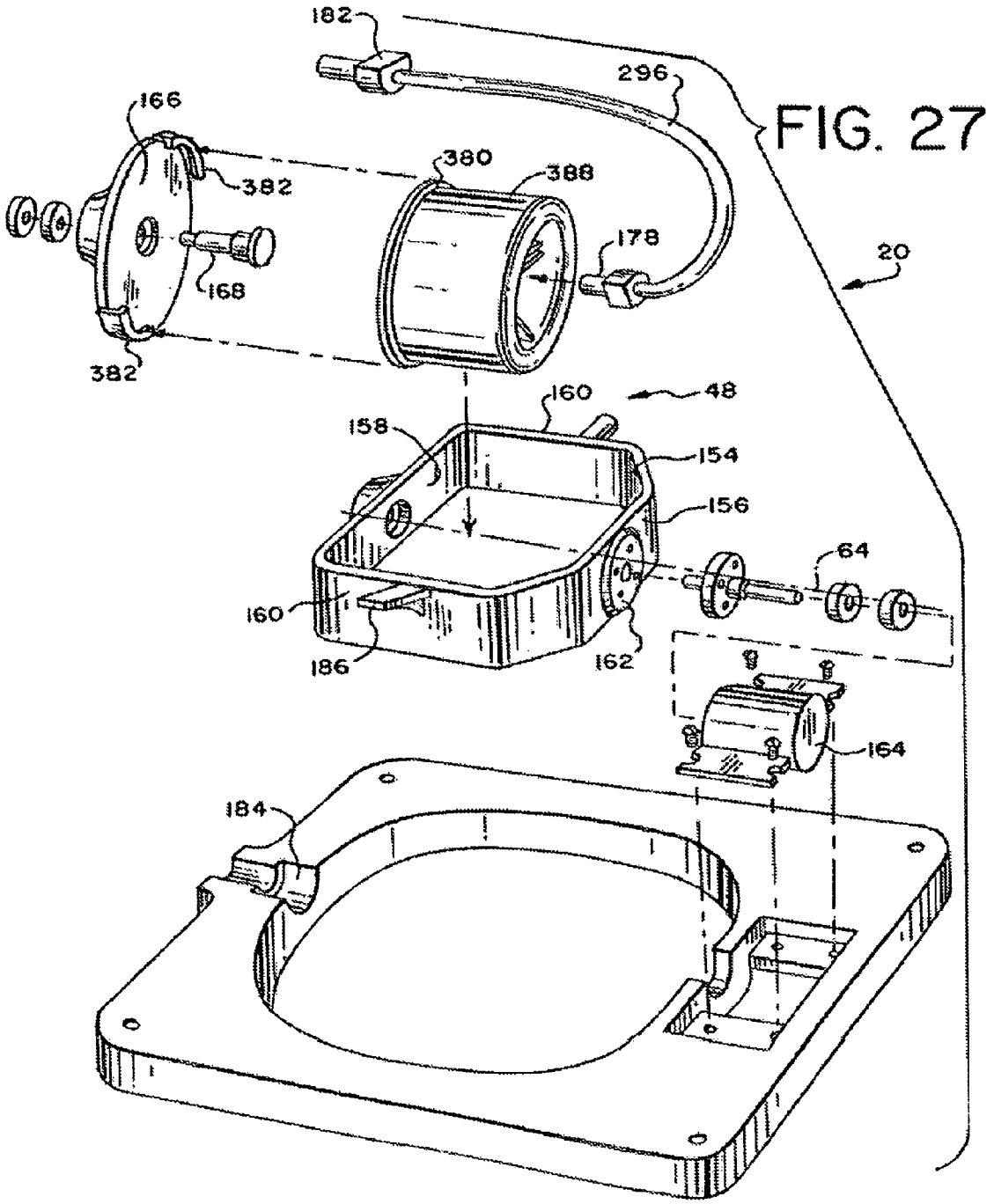
182
296
166
382
380
388
178
168
382
20
160
48
158
154
156
64
160
186
162
164
184

FIG. 27

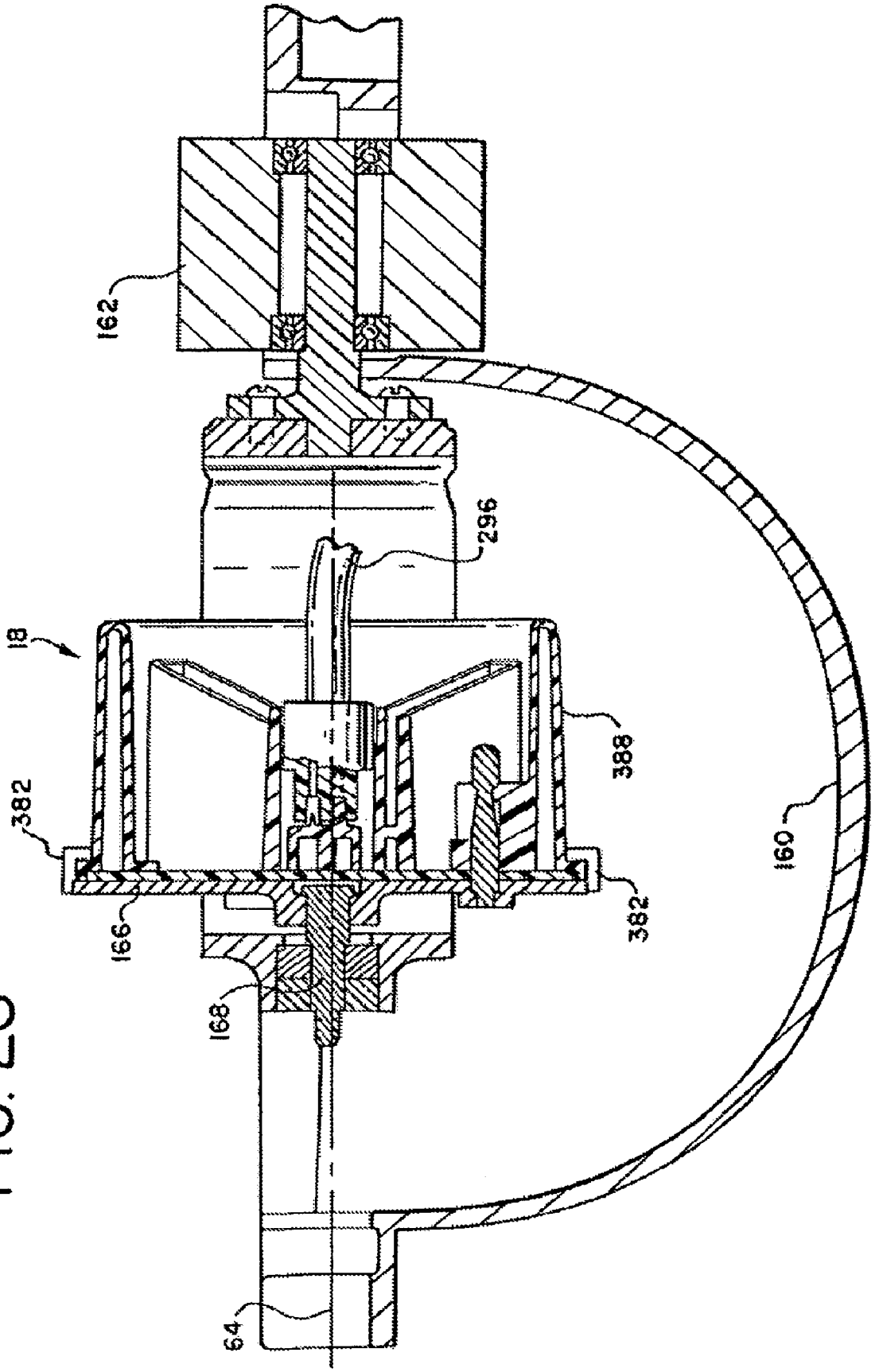

FIG. 28

FIG. 29

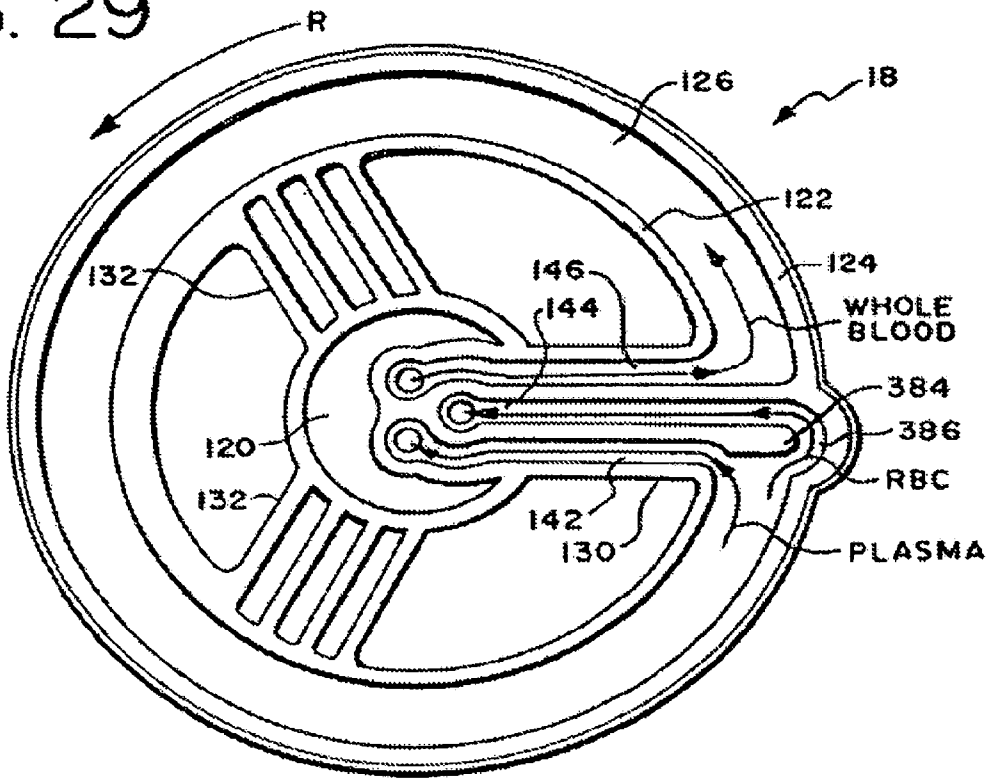
R
126
18
122
124
132
146
144
WHOLE
BLOOD
384
386
120
RBC
132
142
130
PLASMA

FIG. 30

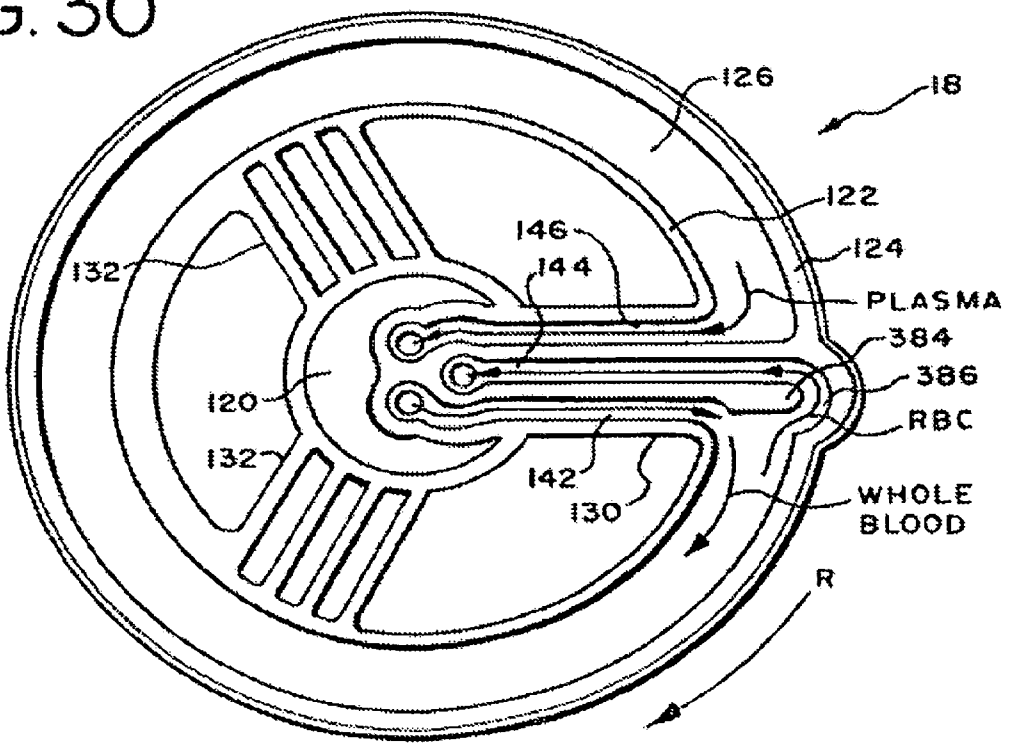
126
18
122
146
124
132
144
PLASMA
384
386
120
RBC
132
142
130
WHOLE
BLOOD
R

FIG. 31

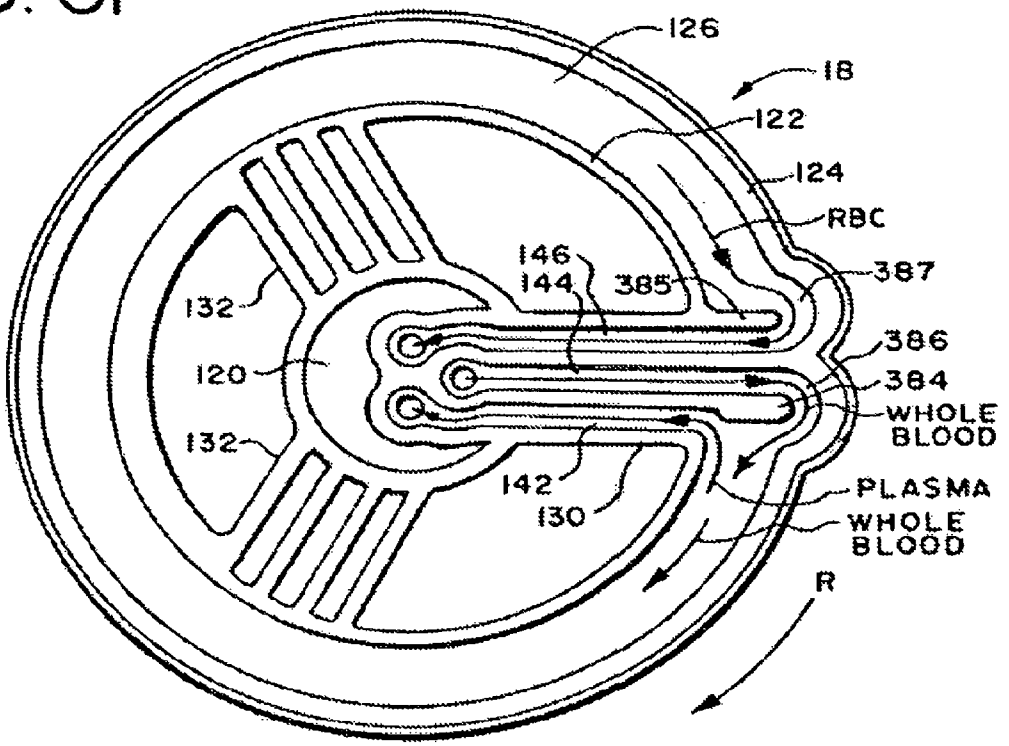
126
18
122
124
RBC
146
144
385
387
132
386
120
384
WHOLE BLOOD
132
142
130
PLASMA
WHOLE BLOOD
R

FIG. 32

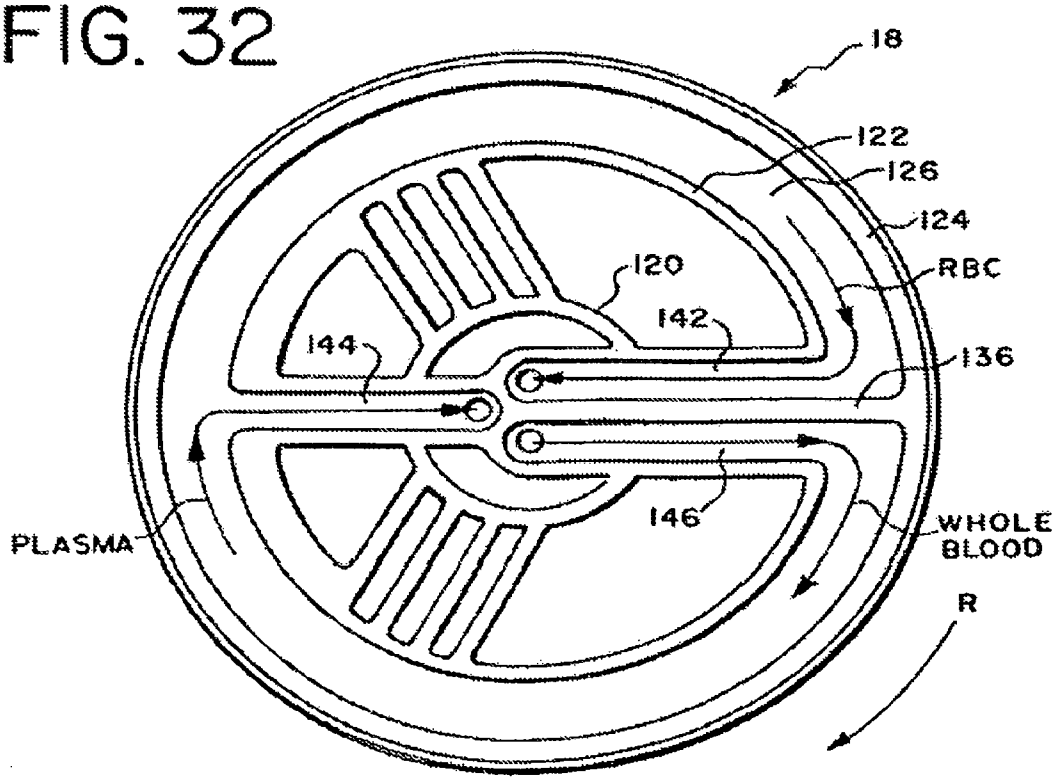
18
122
126
124
120
RBC
142
144
136
146
PLASMA
WHOLE BLOOD
R

FIG. 33

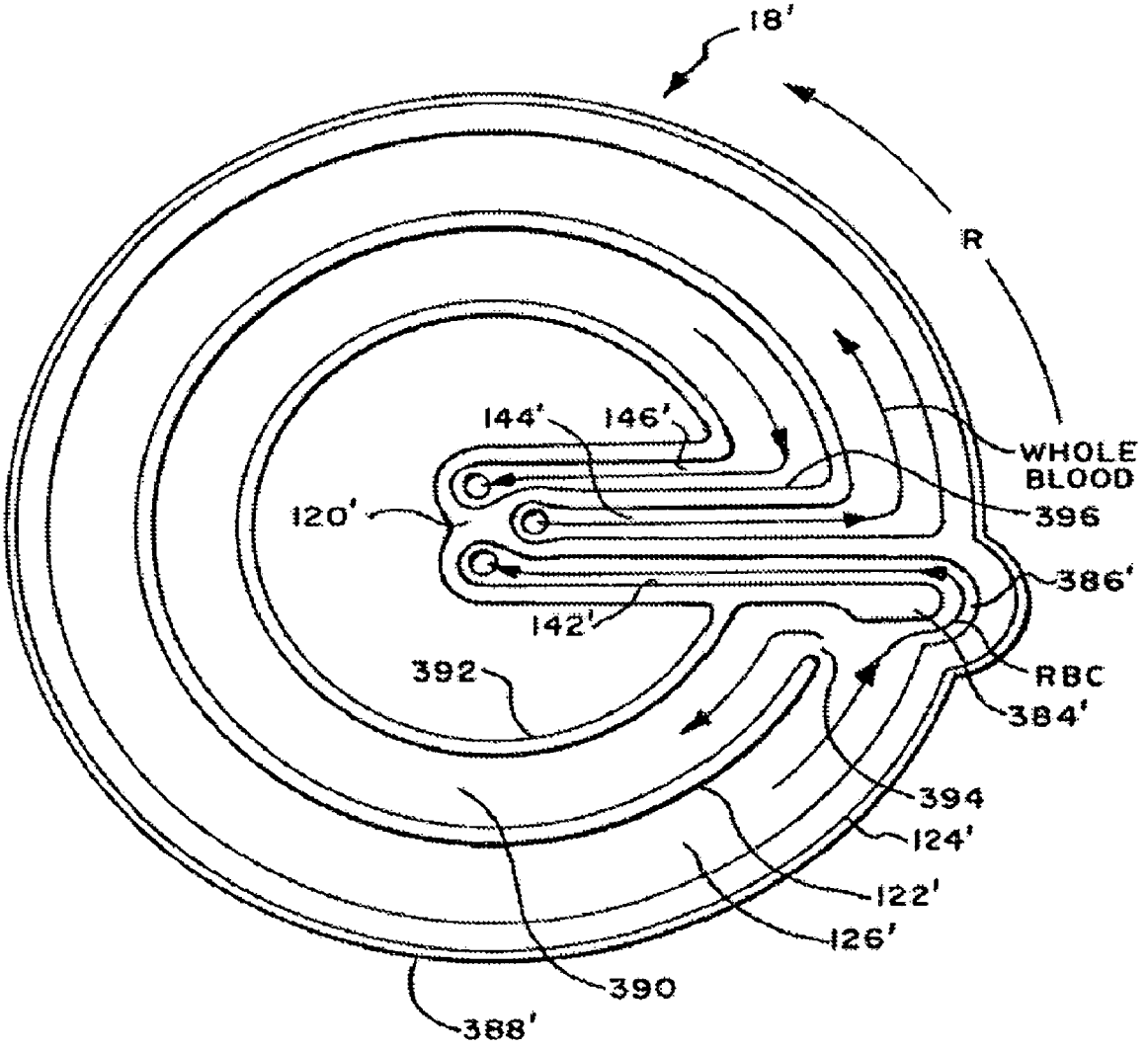
18'
R
144'
146'
WHOLE BLOOD
120'
396
386'
142'
392
RBC
384'
394
124'
122'
126'
390
388'

FIG. 34

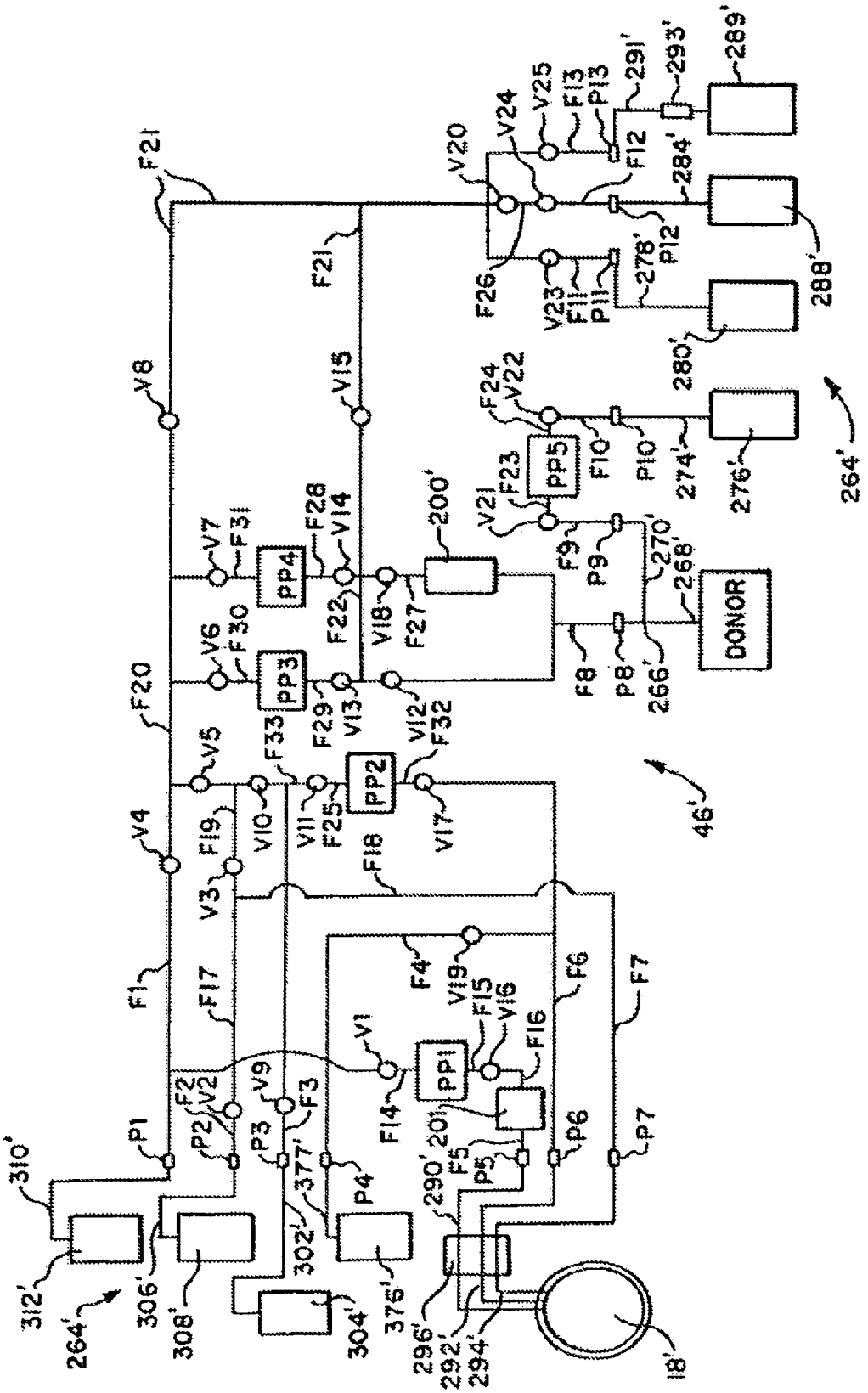

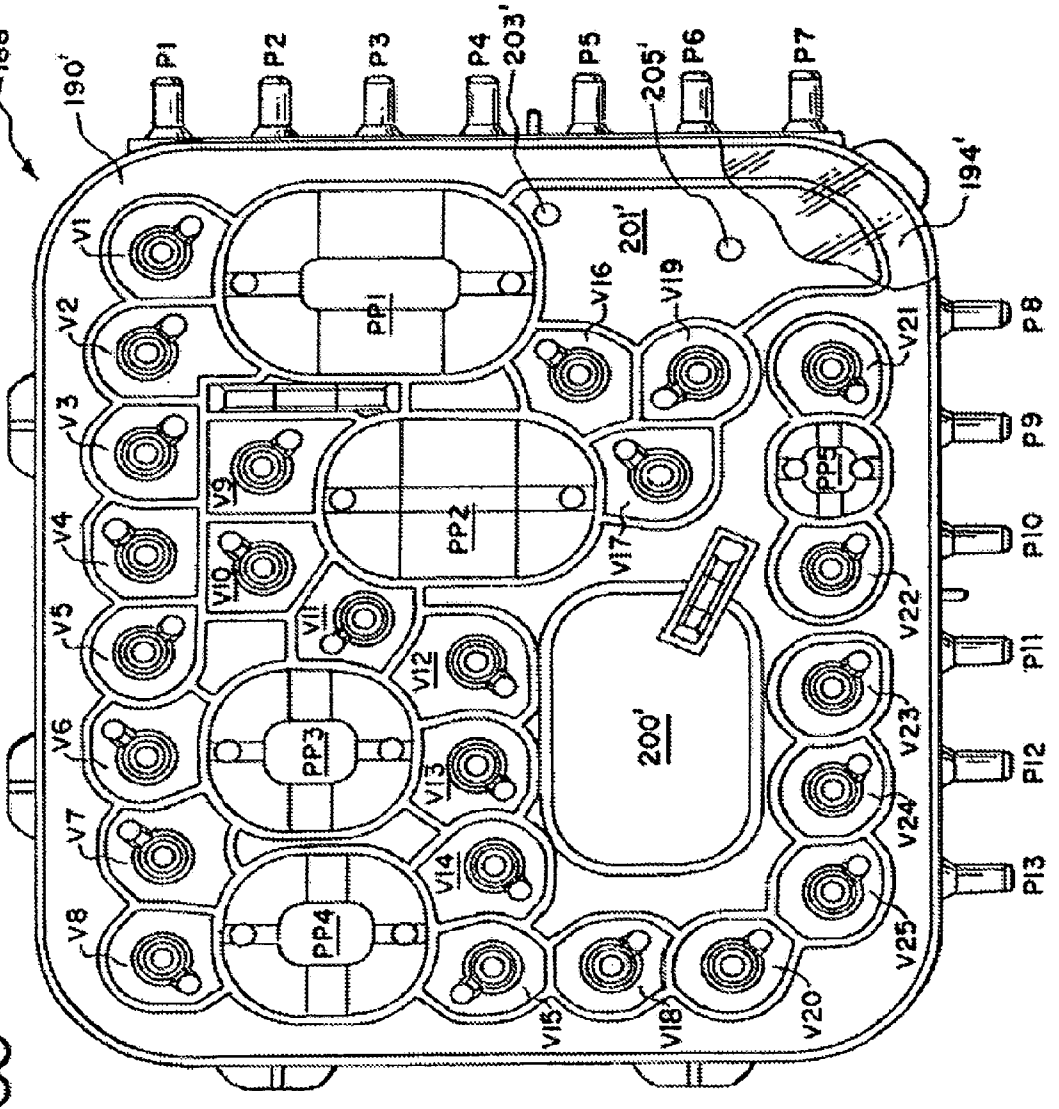
188'
190'
P1
P2
P3
P4
203'
P5
205'
P6
P7
194'
201'
V1
V2
V3
V4
V5
V6
V7
V8
V9
V10
V11
V12
V13
V14
V15
V16
V17
V18
V19
V20
V21
V22
V23
V24
V25
PP1
PP2
PP3
PP4
PP5
200'
P8
P9
P10
P11
P12
P13

FIG. 35

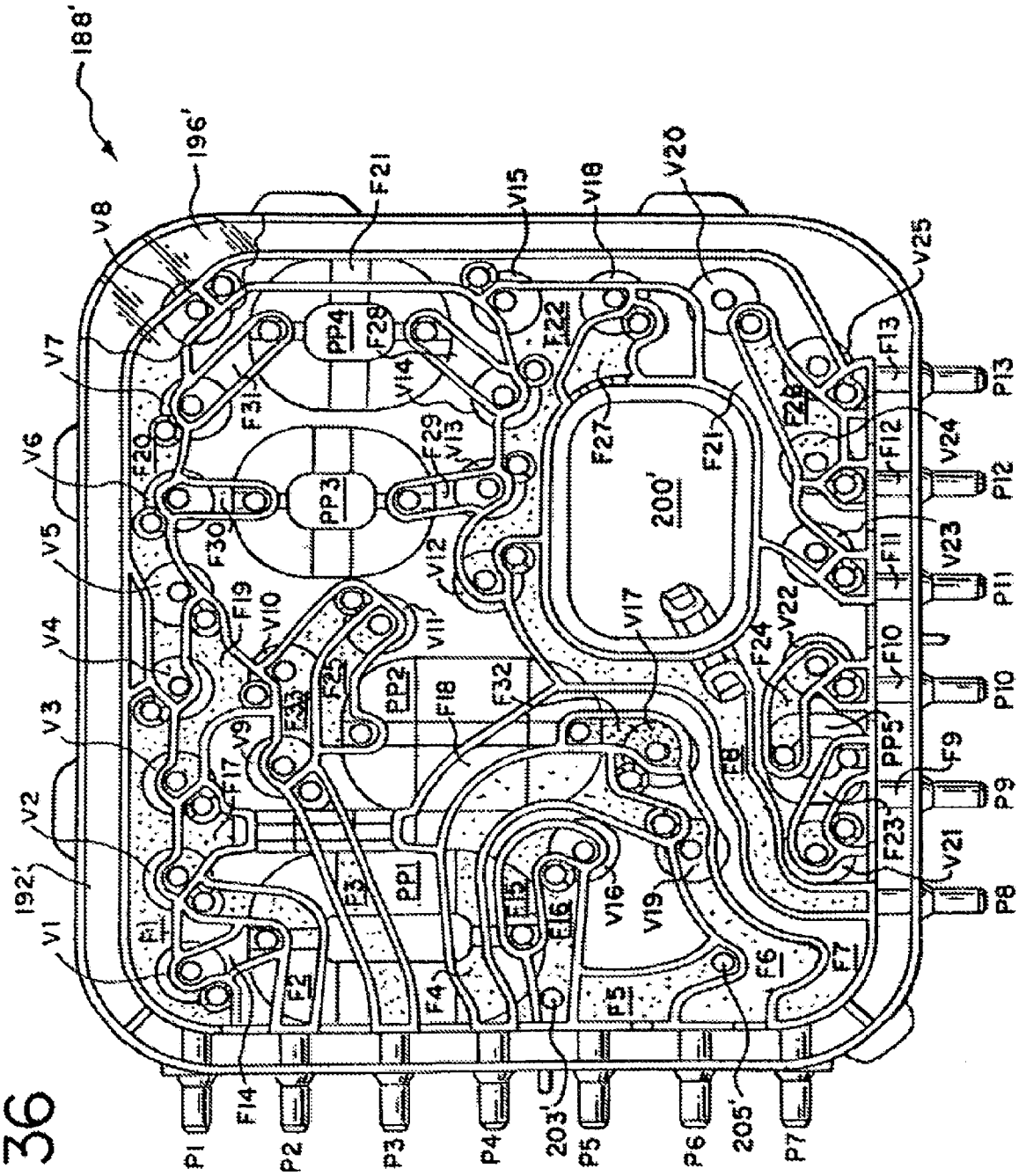
188'
196'
192'
200'
203'
205'
V1
V2
V3
V4
V5
V6
V7
V8
V9
V10
V11
V12
V13
V14
V15
V16
V17
V18
V19
V20
V21
V22
V23
V24
V25
F1
F2
F3
F4
F5
F6
F7
F8
F9
F10
F11
F12
F13
F14
F15
F16
F17
F18
F19
F20
F21
F22
F23
F24
F25
F27
F28
F29
F30
F31
F32
F33
PP1
PP2
PP3
PP4
PP5
P1
P2
P3
P4
P5
P6
P7
P8
P9
P10
P11
P12
P13

FIG. 36

FIG. 37A

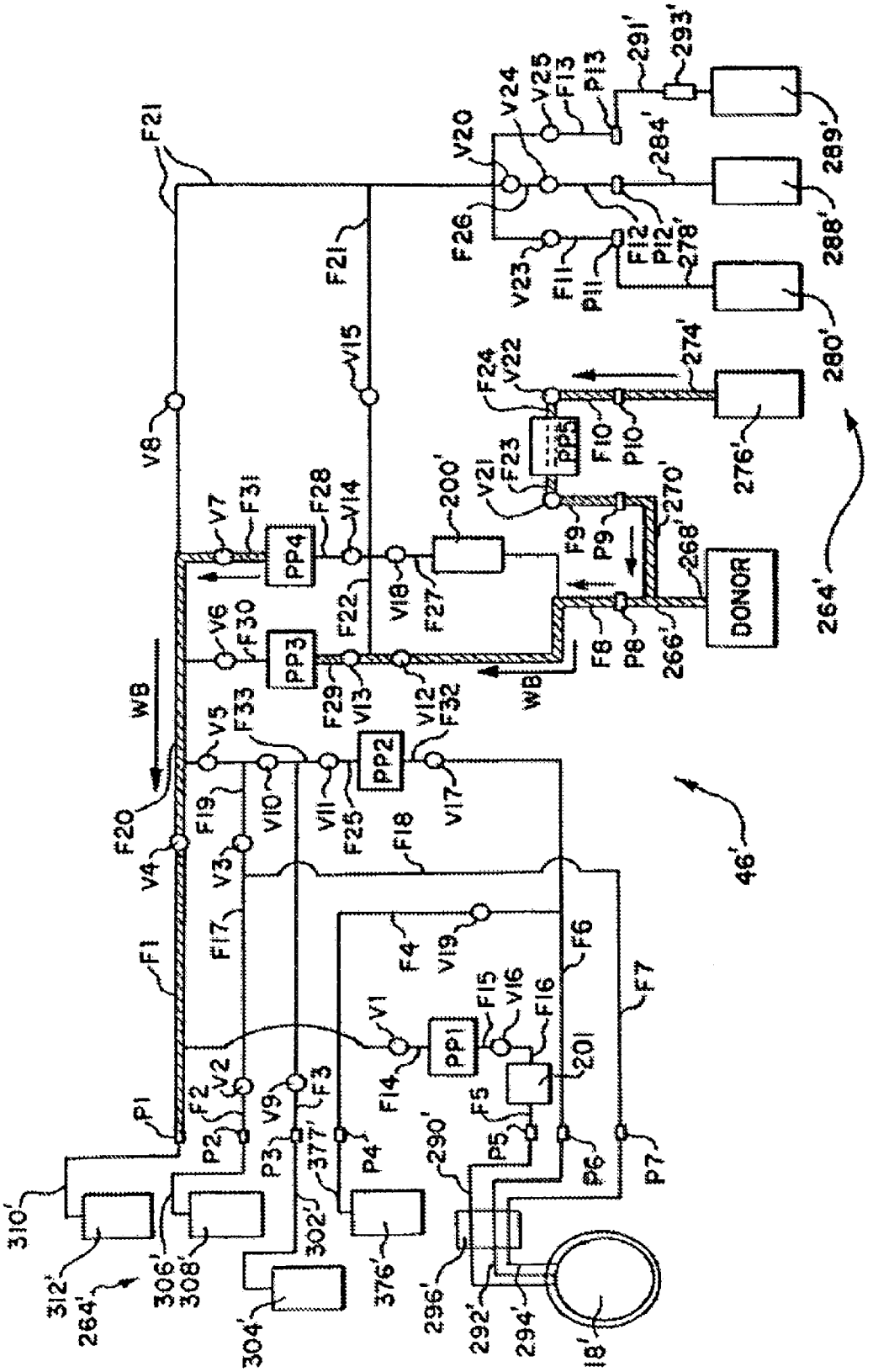
F21
V20
V24
V25
F13
P13
291'
293'
284'
289'
288'
280'
F26
V23
F11
P11
F12
P12
278'
V15
V8
F24
V22
274'
276'
F10
P10
PP5
V21
F23
200'
270'
F9
P9
268'
DONOR
264'
V7
F31
PP4
F28
V14
V18
F27
F22
V6
F30
PP3
F29
V13
V12
F32
F8
P8
266'
WB
V5
F33
PP2
V17
F20
F19
V10
V11
F25
F18
46'
V4
V3
F17
F4
V19
F6
F7
F1
V1
PP1
F15
V16
F16
201
V2
F2
F14
F5
P1
P2
V9
F3
P3
377'
P4
290'
P5
P6
P7
310'
312'
264'
306'
308'
302'
376'
304'
296'
292'
294'
18'

FIG. 37B

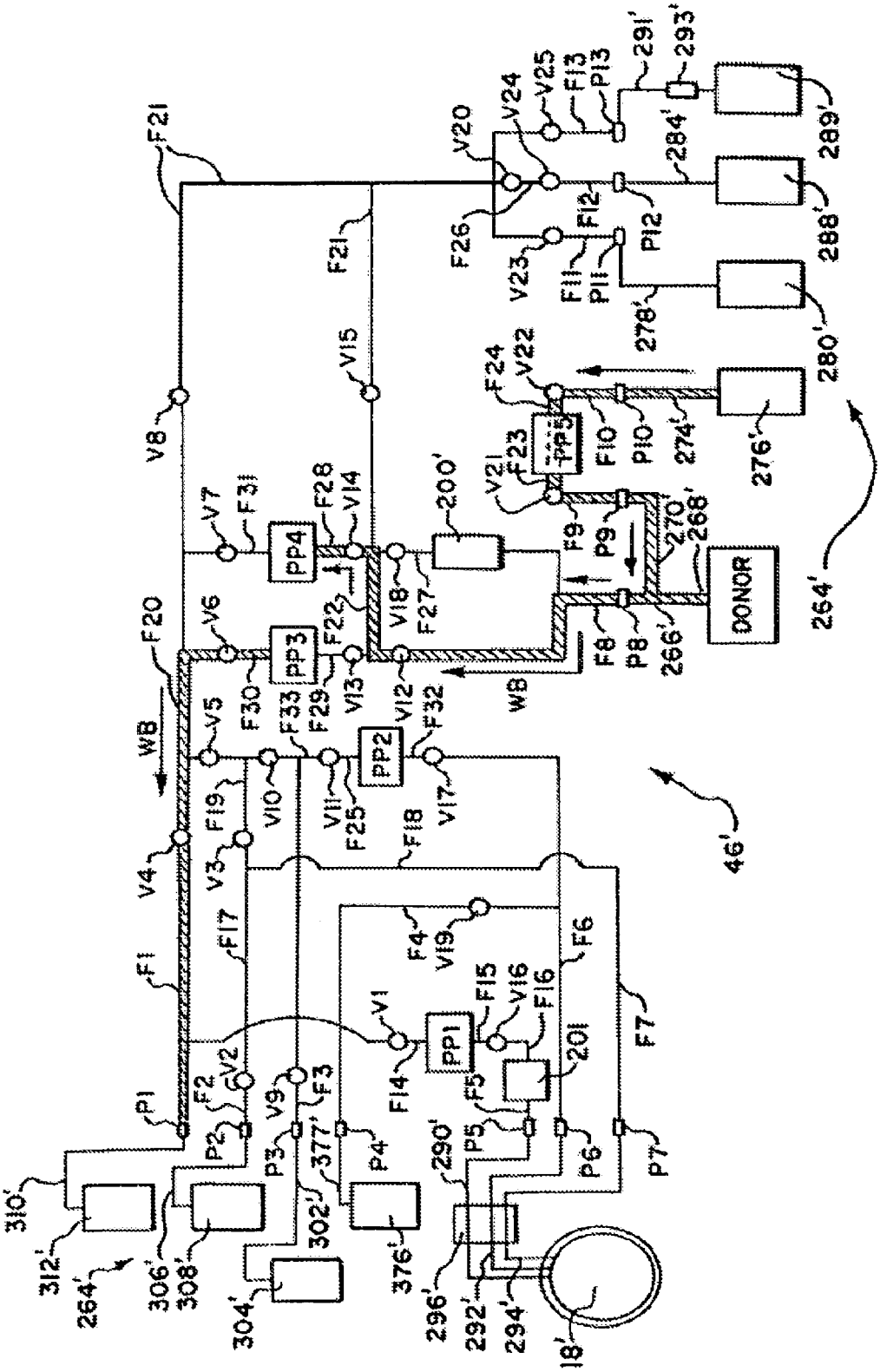
DONOR
PP1
PP2
PP3
PP4
PP5
WB
WB
46'
264'
264'
18'
200'
201
276'
280'
288'
289'
290'
291'
292'
293'
294'
296'
302'
304'
306'
308'
310'
312'
266'
268'
270'
274'
276'
278'
284'
290'
302'
376'
377'
F1
F2
F3
F4
F5
F6
F7
F8
F9
F10
F11
F12
F13
F14
F15
F16
F17
F18
F19
F20
F21
F22
F23
F24
F25
F26
F27
F28
F29
F30
F31
F32
F33
P1
P2
P3
P4
P5
P6
P7
P8
P9
P10
P11
P12
P13
V1
V2
V3
V4
V5
V6
V7
V8
V9
V10
V11
V12
V13
V14
V15
V16
V17
V18
V19
V20
V21
V22
V23
V24
V25

FIG. 37C

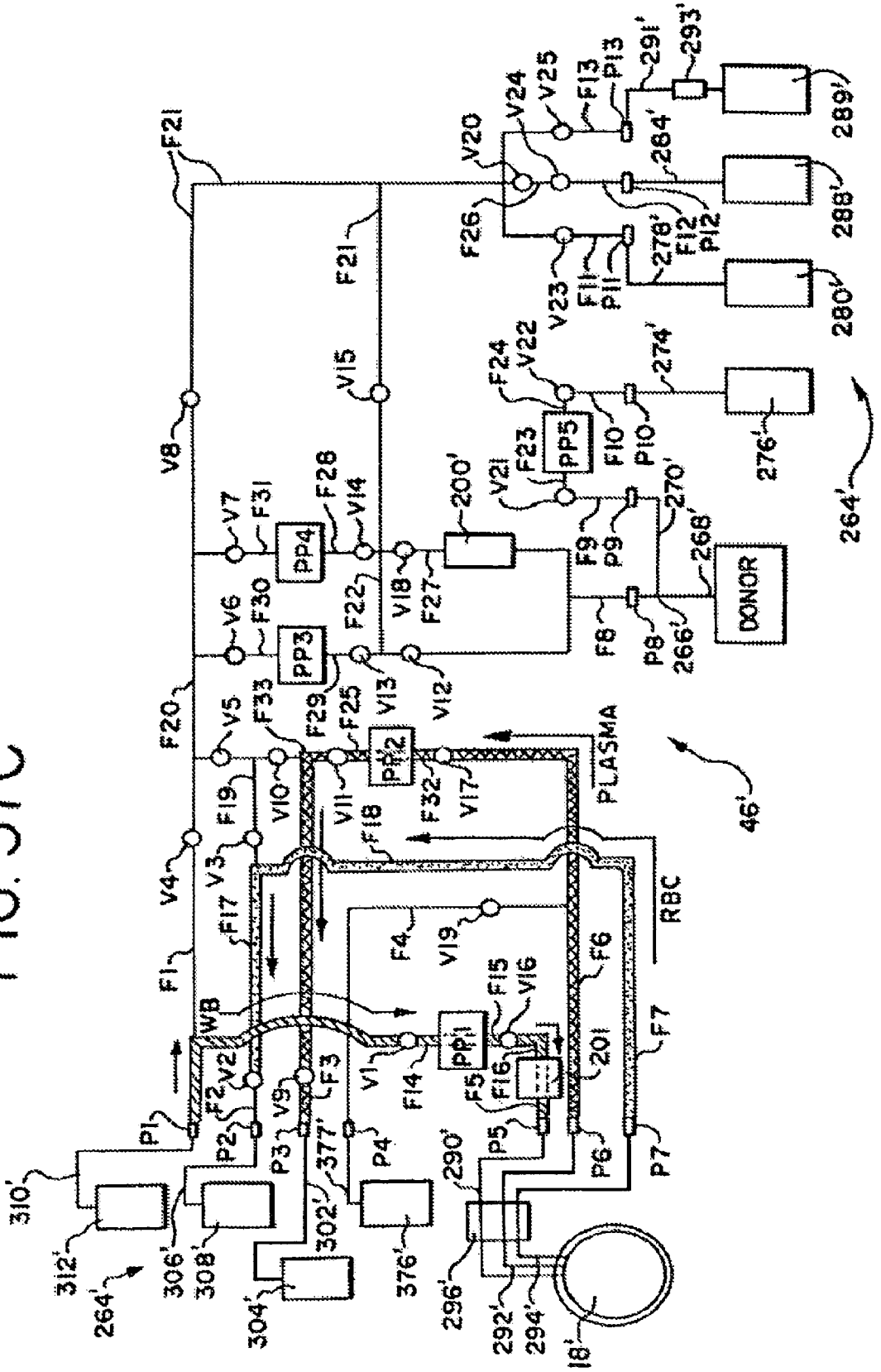

FIG. 37D

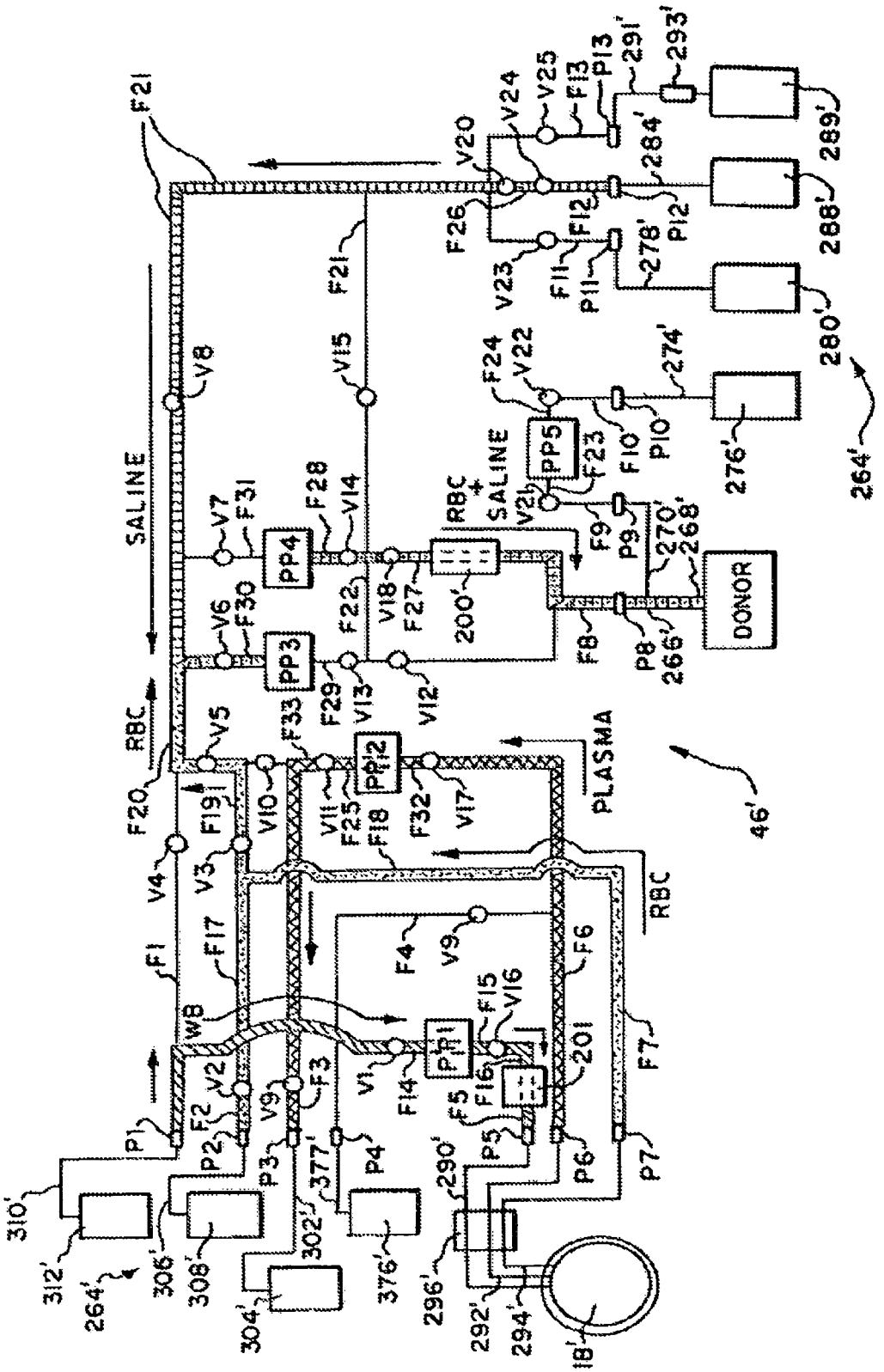

FIG. 37E

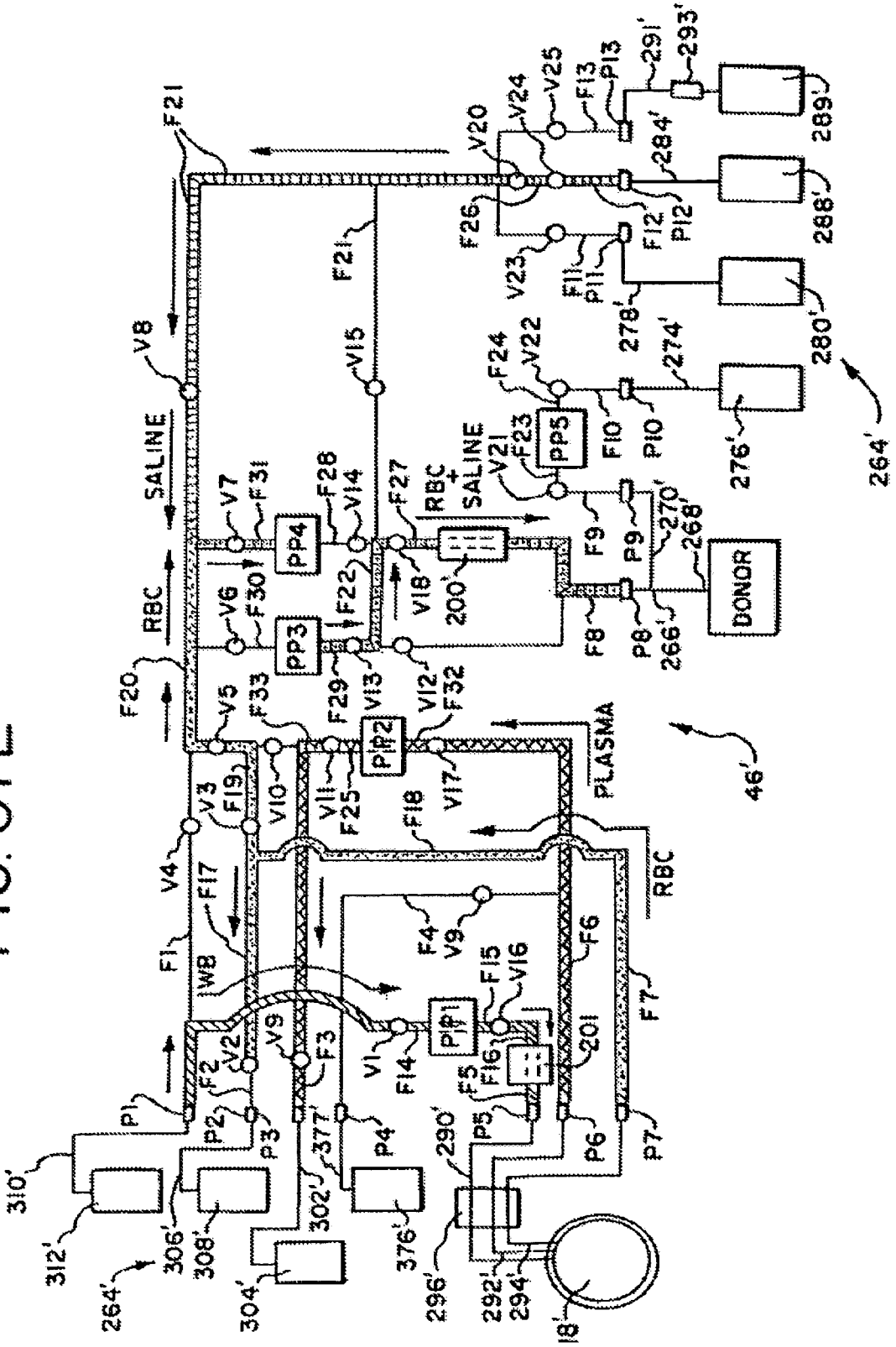
SALINE
RBC
RBC + SALINE
PLASMA
DONOR
PP1
PP2
PP3
PP4
PP5
46'
264'
18'

FIG. 38A

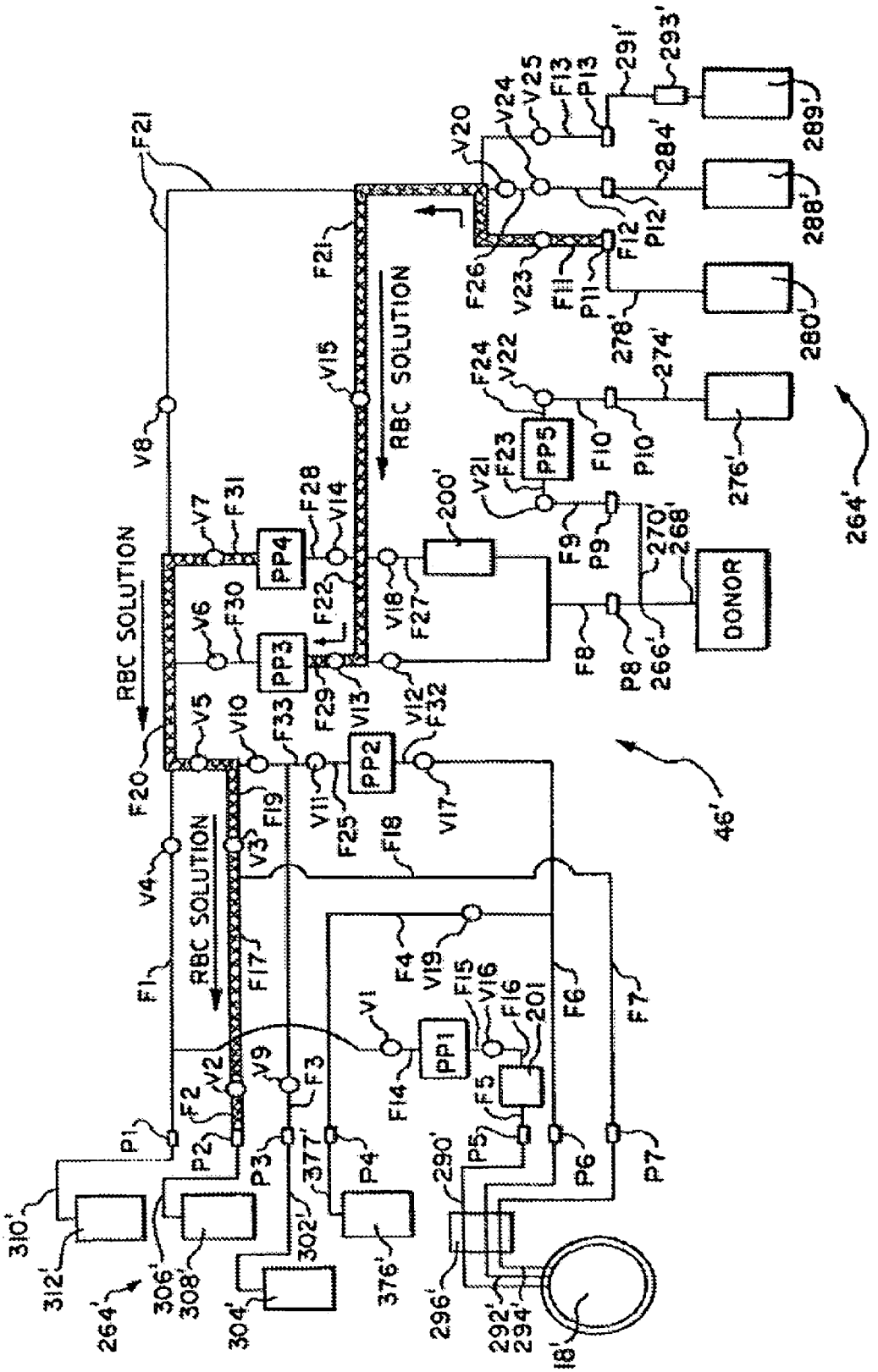
RBC SOLUTION
RBC SOLUTION
RBC SOLUTION
DONOR
PP1
PP2
PP3
PP4
PP5
46'
264'
264'
18'

FIG. 38B

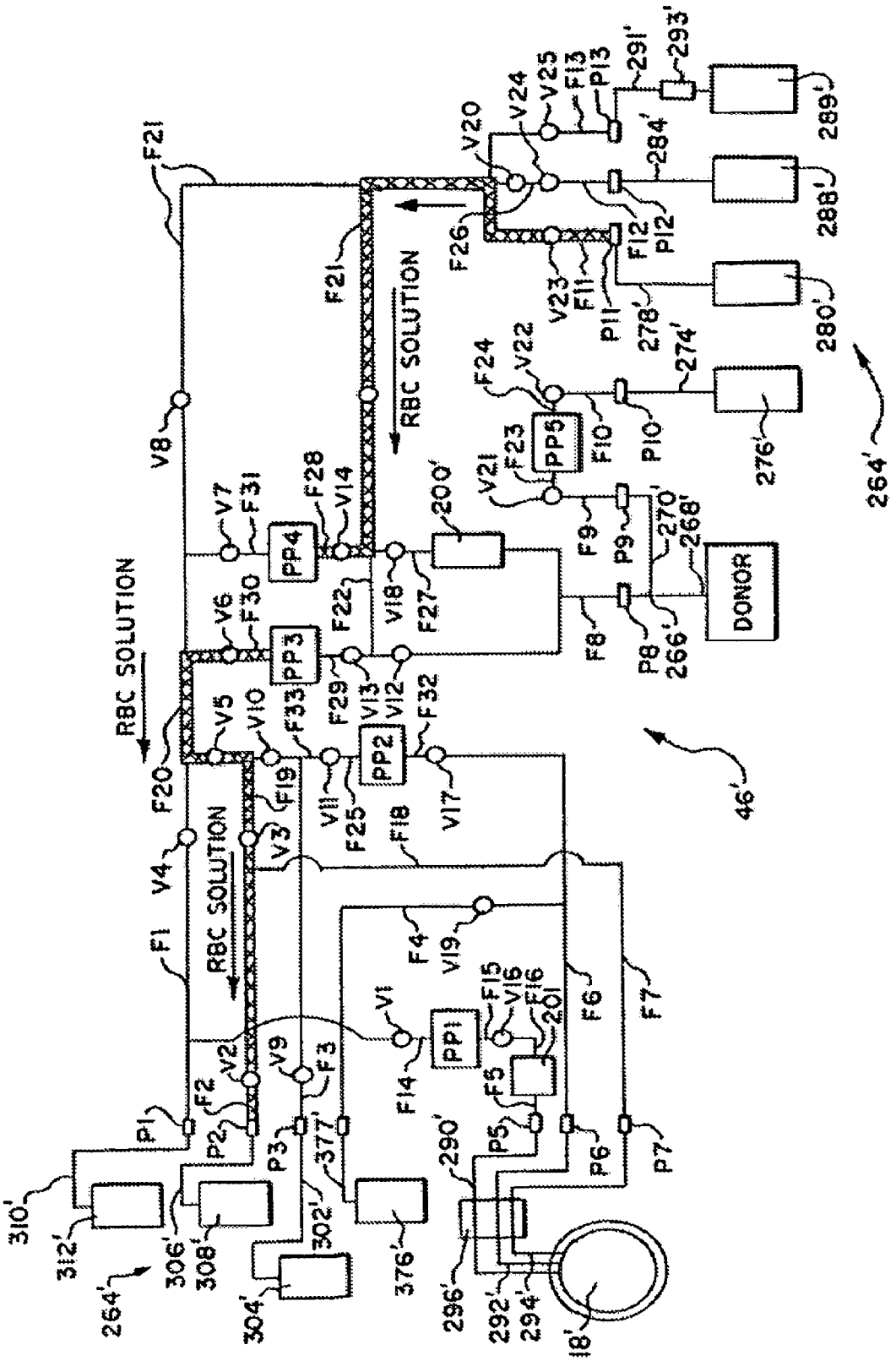
RBC SOLUTION
RBC SOLUTION
RBC SOLUTION
DONOR
PP1
PP2
PP3
PP4
PP5
46'
264'
264'
18'
200'
201

FIG. 39A

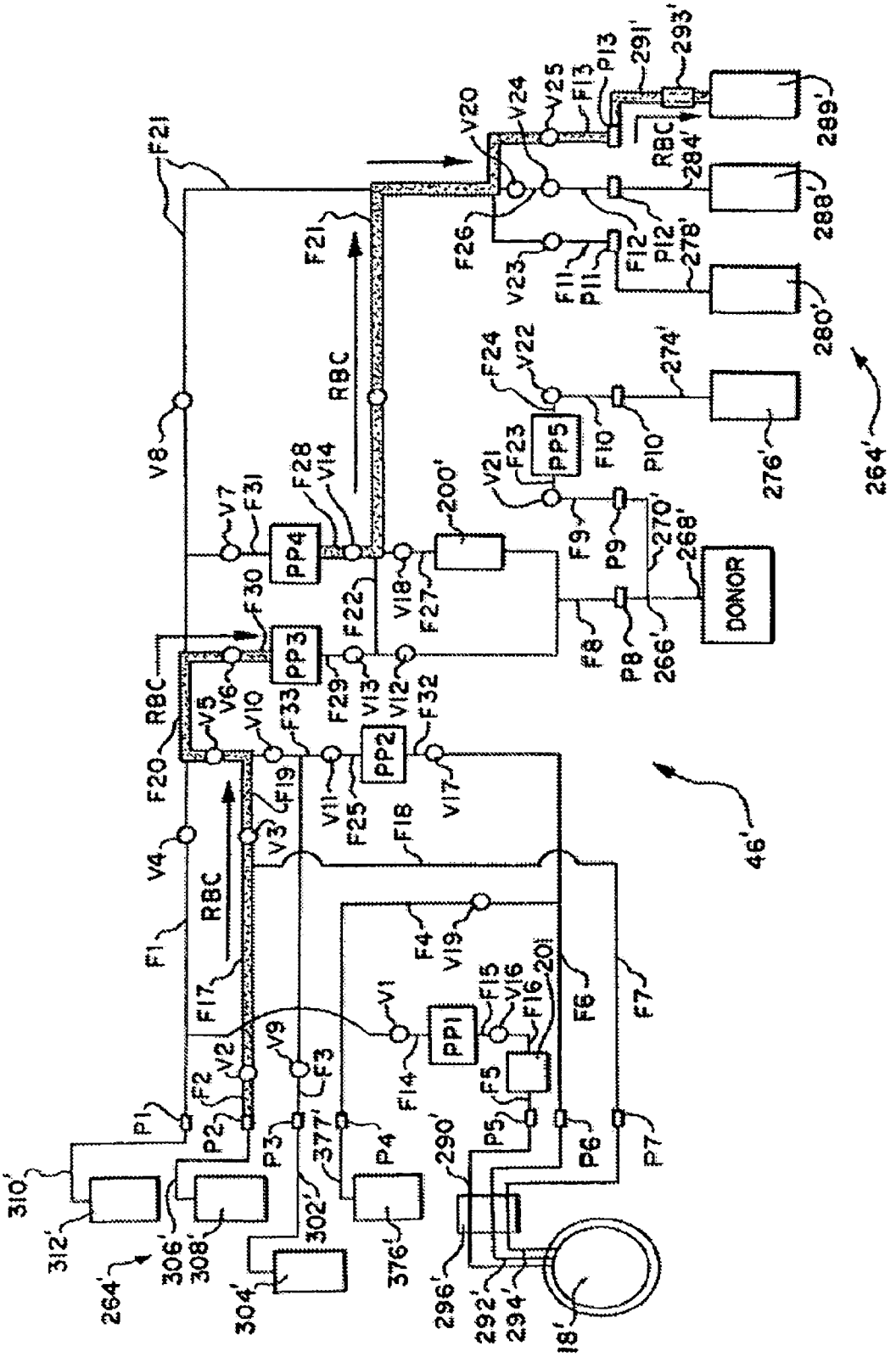

FIG. 39B

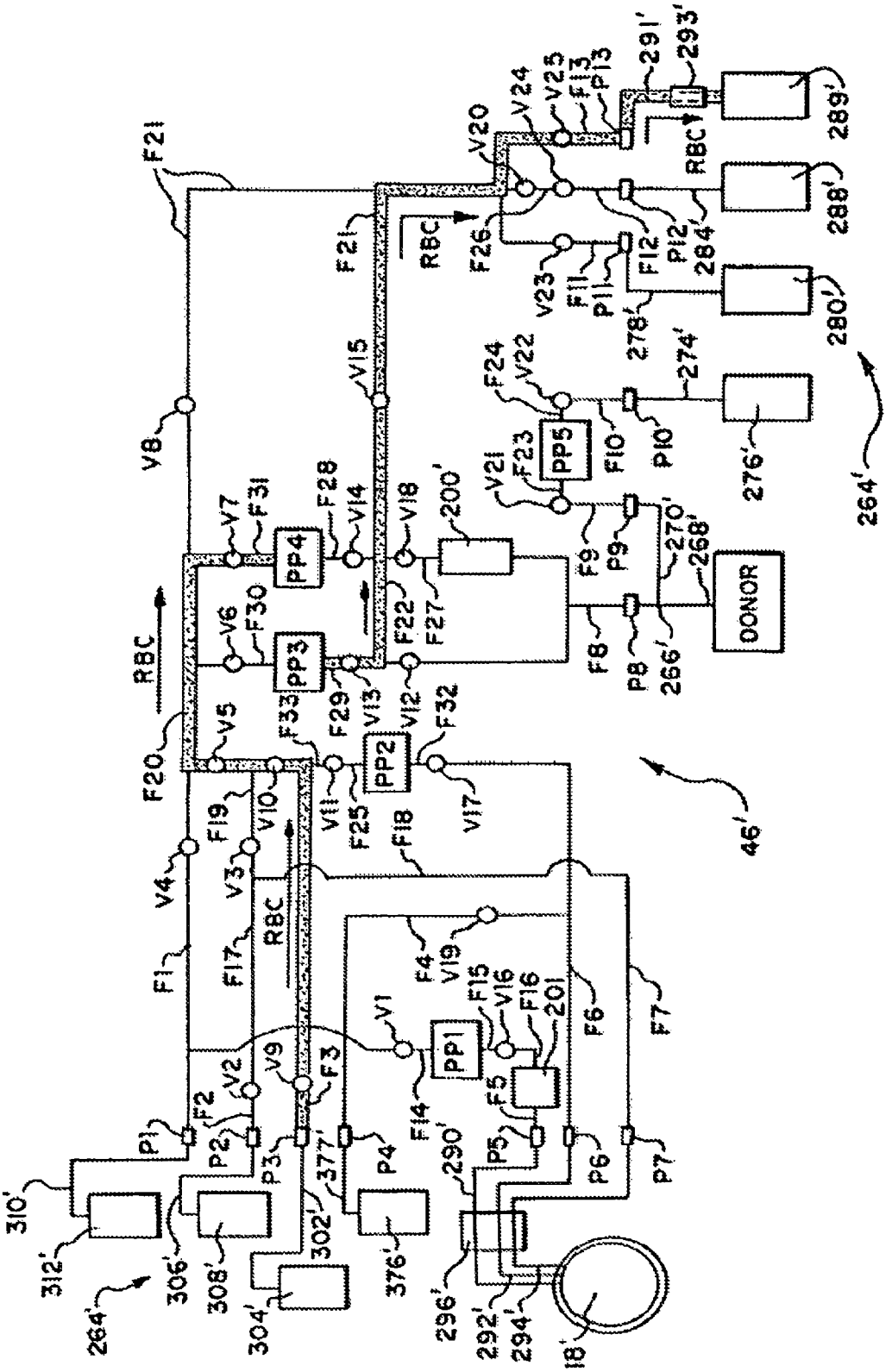
RBC
DONOR
PP1
PP2
PP3
PP4
PP5
F1
F2
F3
F4
F5
F6
F7
F8
F9
F10
F11
F12
F13
F14
F15
F16
F17
F18
F19
F20
F21
F22
F23
F24
F25
F26
F27
F28
F29
F30
F31
F32
F33
V1
V2
V3
V4
V5
V6
V7
V8
V9
V10
V11
V12
V13
V14
V15
V16
V17
V18
V19
V20
V21
V22
V23
V24
V25
P1
P2
P3
P4
P5
P6
P7
P8
P9
P10
P11
P12
P13
200'
201
264'
266'
268'
270'
274'
276'
278'
280'
284'
288'
289'
290'
291'
293'
296'
302'
304'
306'
308'
310'
312'
376'
377'
292'
294'
18'
46'

FIG. 40

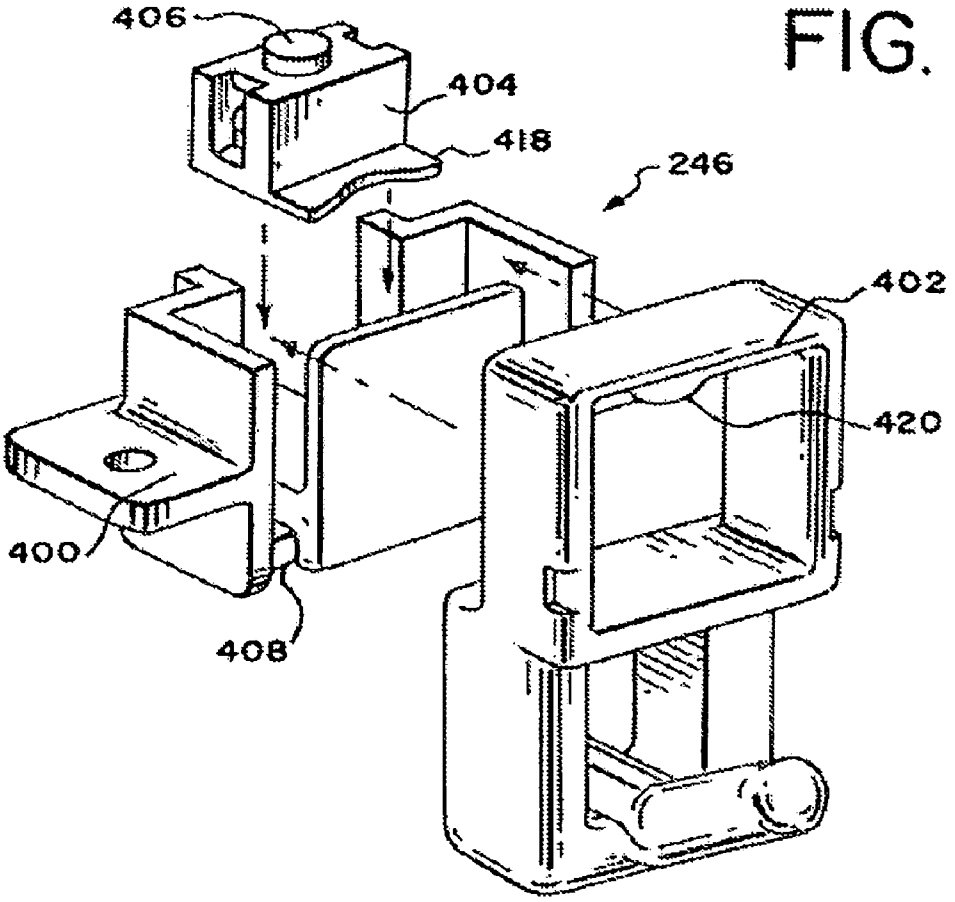

FIG. 41

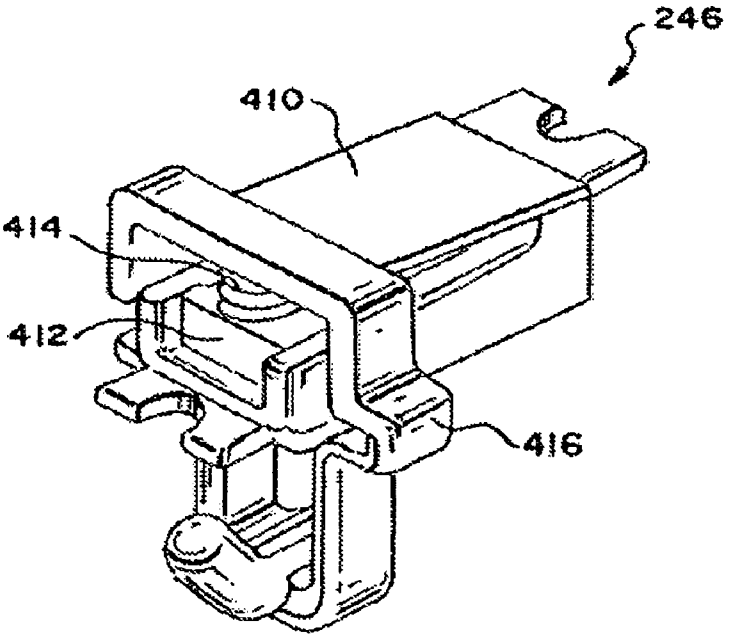

FIG. 42

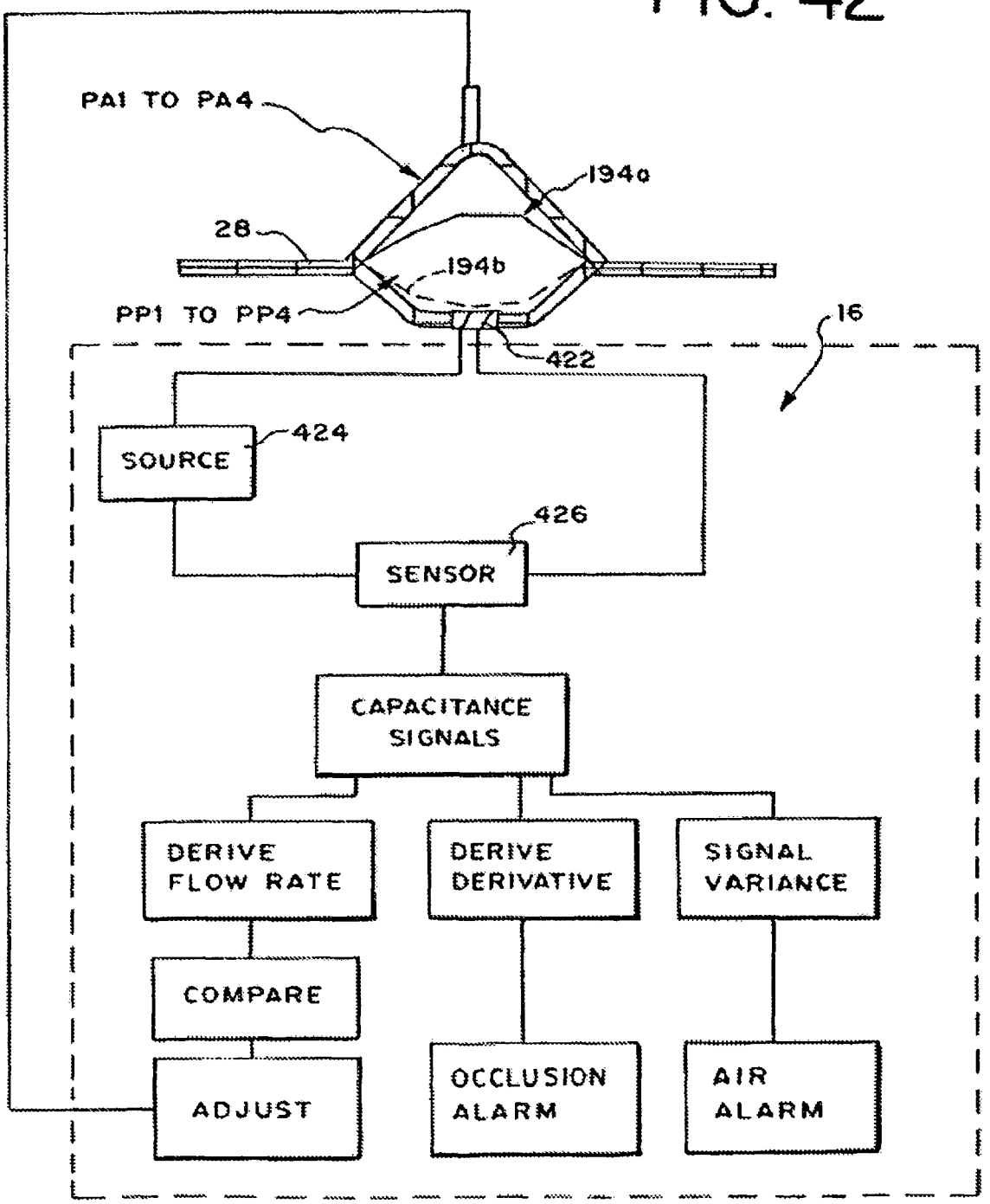
PA1 TO PA4
194a
28
194b
PP1 TO PP4
16
422
SOURCE
424
426
SENSOR
CAPACITANCE SIGNALS
DERIVE FLOW RATE
DERIVE DERIVATIVE
SIGNAL VARIANCE
COMPARE
ADJUST
OCCLUSION ALARM
AIR ALARM

FIG. 43

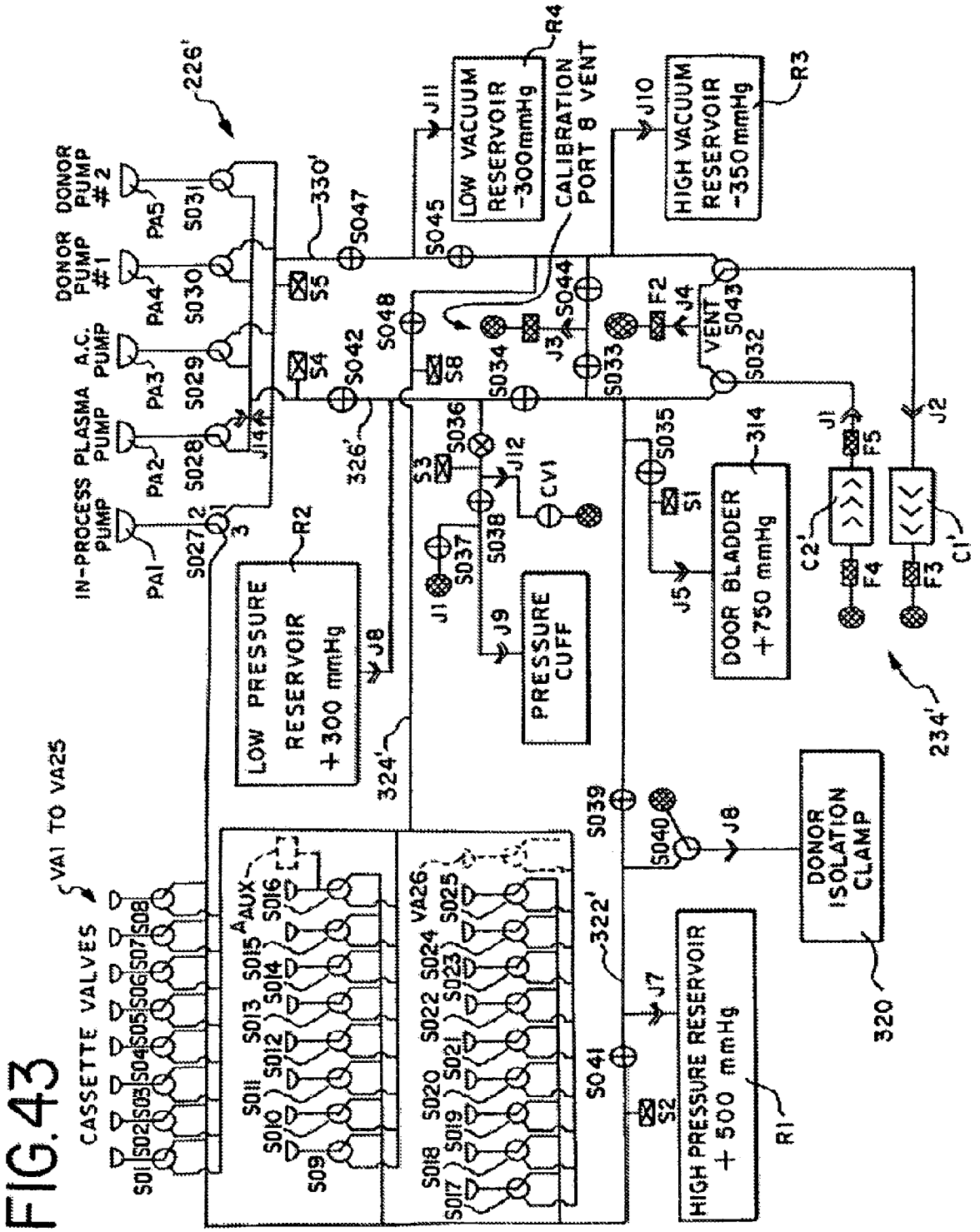
CASSETTE VALVES
VA1 TO VA25
IN-PROCESS PUMP
PLASMA PUMP
A.C. PUMP
DONOR PUMP #1
DONOR PUMP #2
LOW PRESSURE RESERVOIR +300 mmHg
LOW VACUUM RESERVOIR -300mmHg
HIGH VACUUM RESERVOIR -350mmHg
CALIBRATION PORT 8 VENT
PRESSURE CUFF
DOOR BLADDER +750 mmHg
DONOR ISOLATION CLAMP
HIGH PRESSURE RESERVOIR +500 mmHg
VENT
226'
330'
326'
324'
322'
234'
320
314

FIG. 44

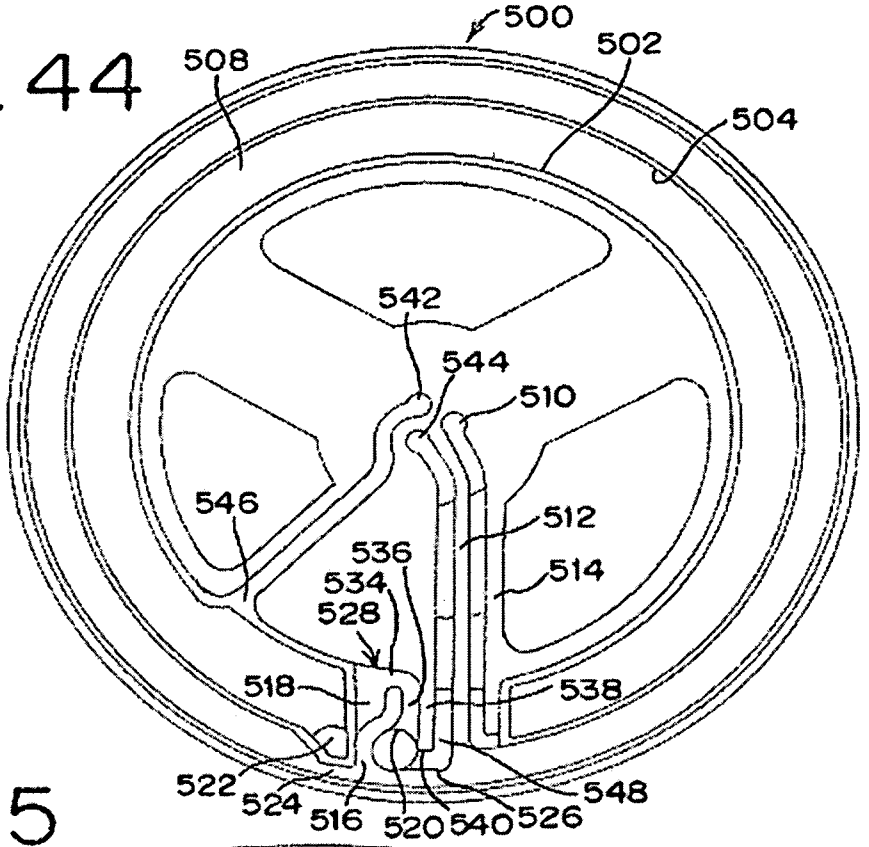
500
502
508
504
542
544
510
546
512
536
514
534
528
518
538
522
524
516
520
540
526
548

FIG. 45

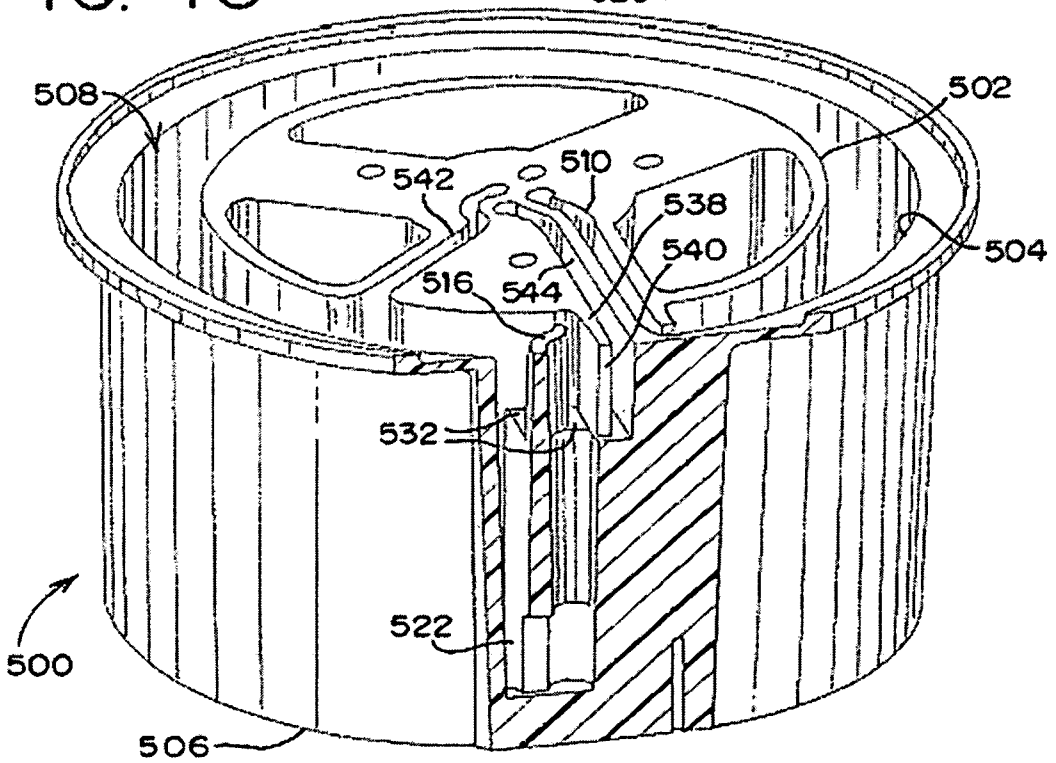
508
502
542
510
538
504
540
516
544
532
522
500
506

FIG. 46

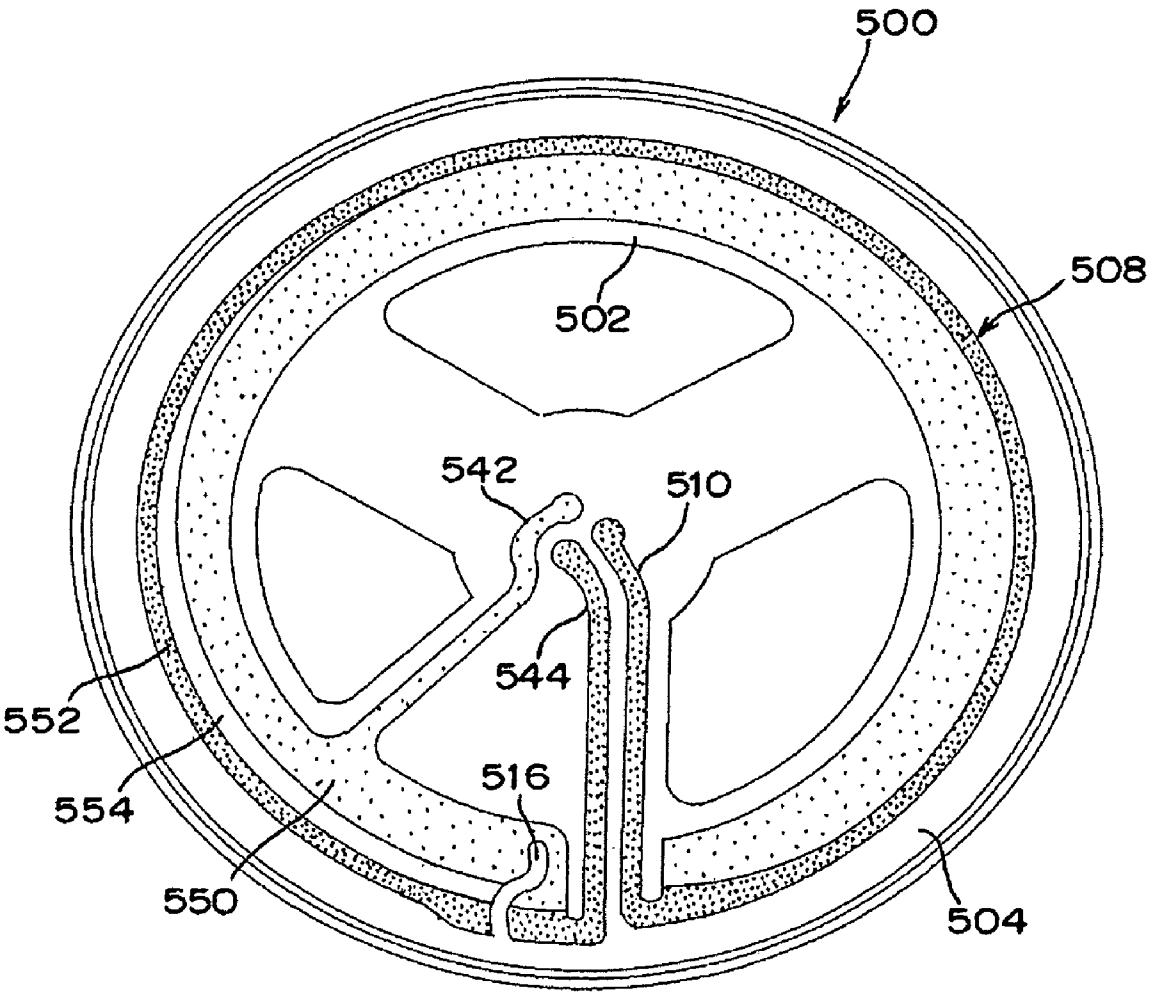

FIG. 47

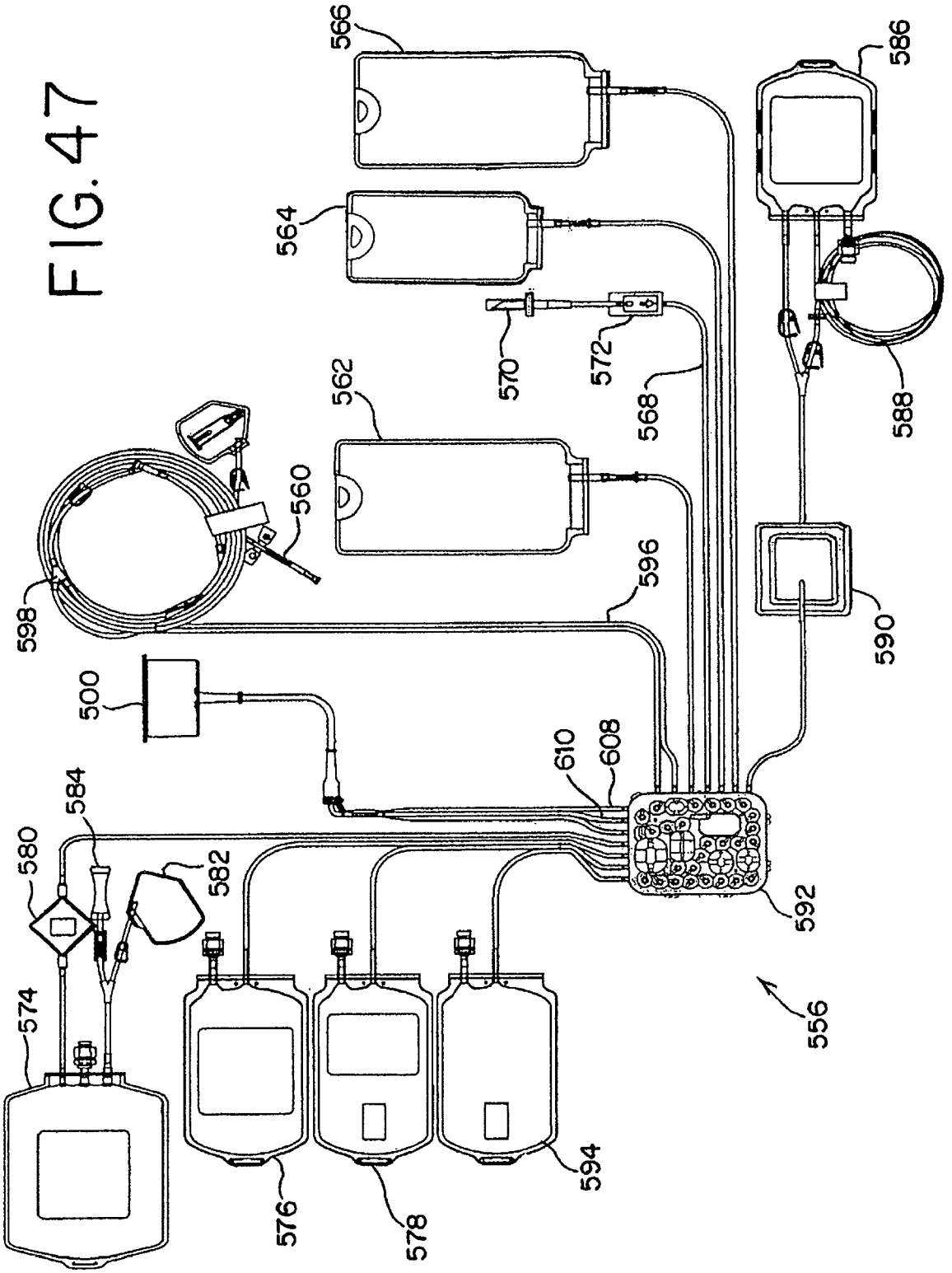
566
564
562
570
572
568
560
598
596
500
610
608
584
580
582
574
576
578
594
592
556
586
588
590

FIG. 48

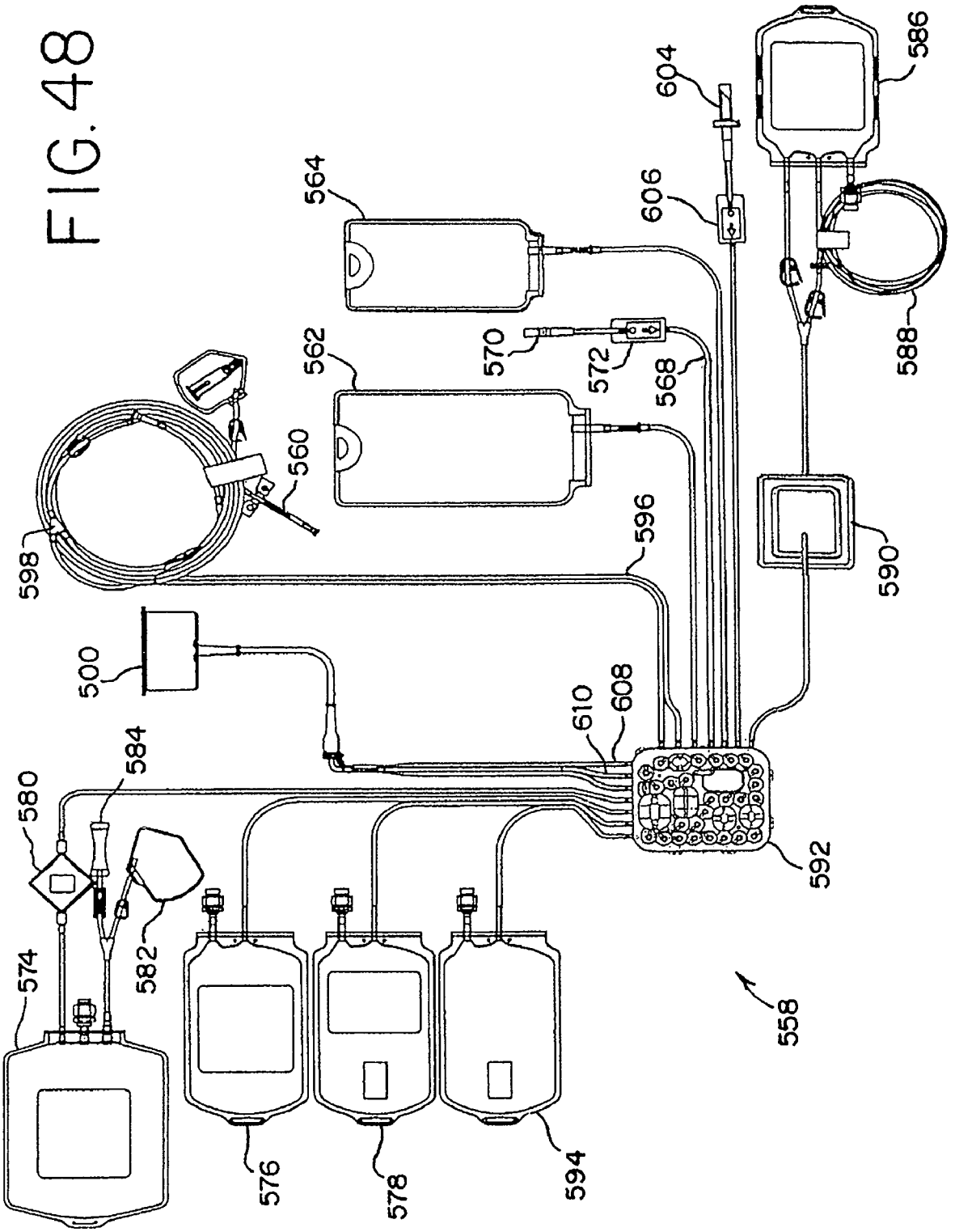

564
562
560
598
596
500
610
608
604
606
586
588
570
572
568
590
592
580
584
582
574
576
578
594
558

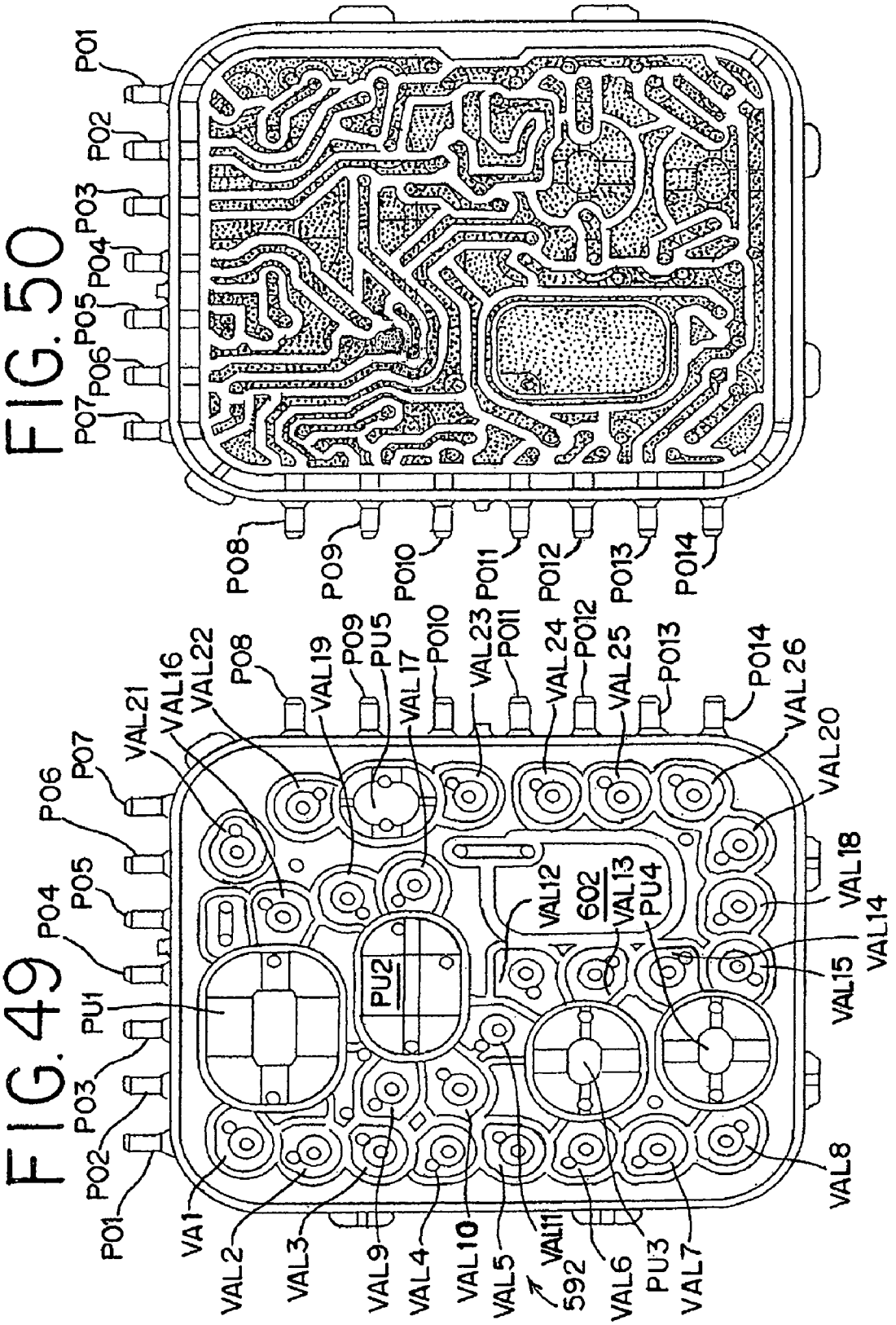
FIG. 50
P01
P02
P03
P04
P05
P06
P07
P08
P09
P010
P011
P012
P013
P014
FIG. 49
P01
P02
P03
P04
P05
P06
P07
PU1
PU2
PU3
PU4
PU5
VAL1
VAL2
VAL3
VAL4
VAL5
VAL6
VAL7
VAL8
VAL9
VAL10
VAL11
VAL12
VAL13
VAL14
VAL15
VAL16
VAL17
VAL18
VAL19
VAL20
VAL21
VAL22
VAL23
VAL24
VAL25
VAL26
602
592

FIG. 51

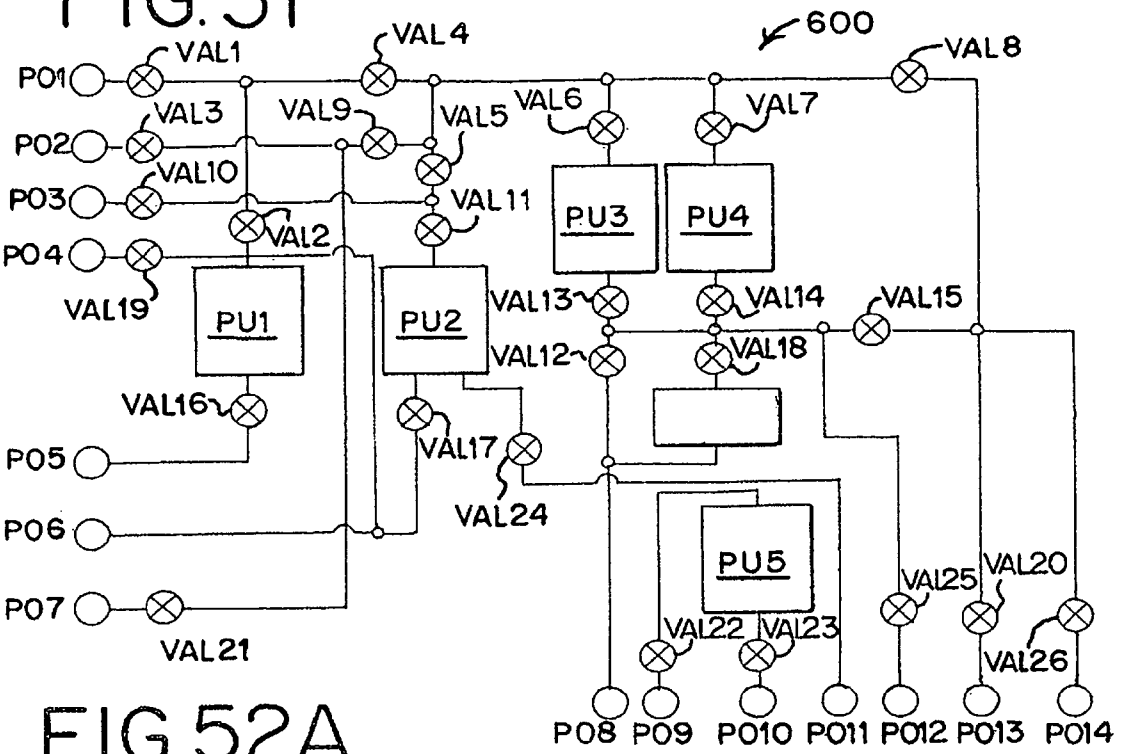

FIG. 52A

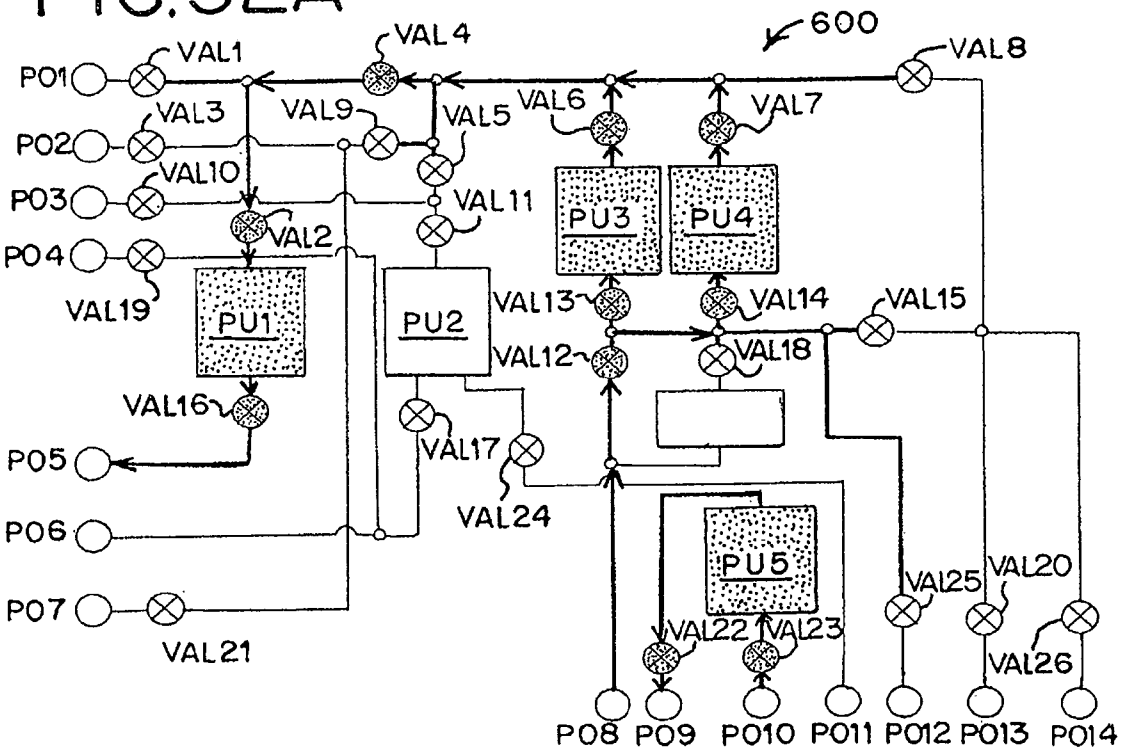

FIG.52B

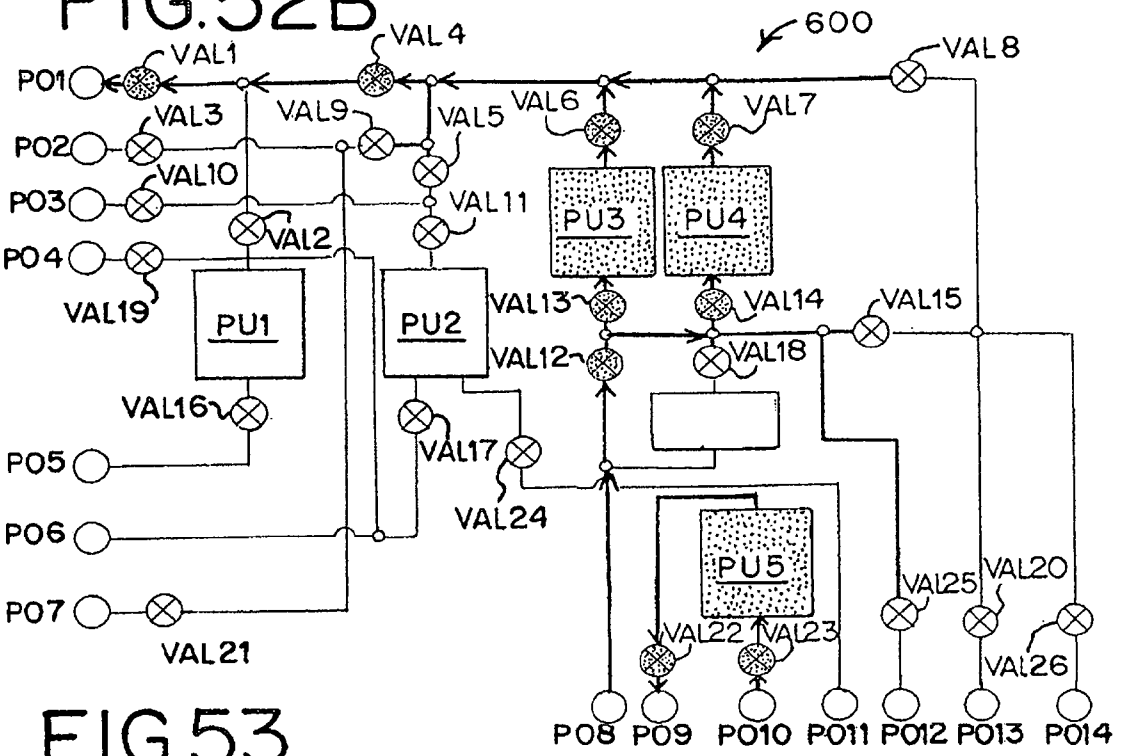

FIG.53

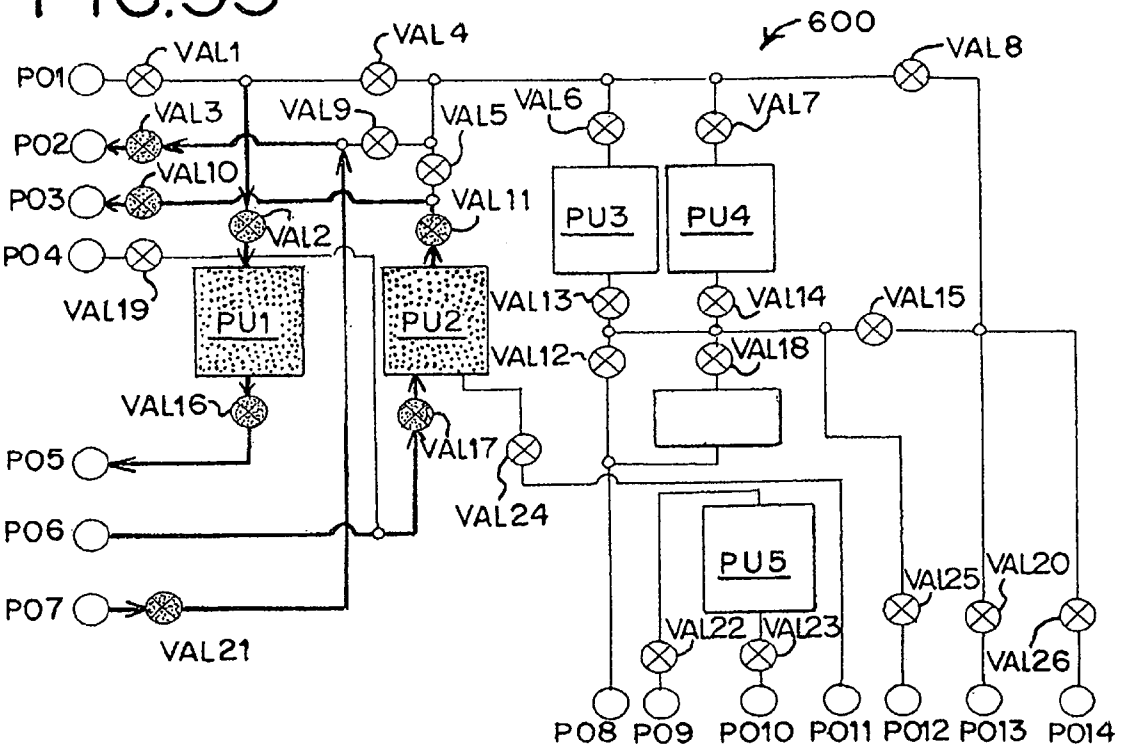

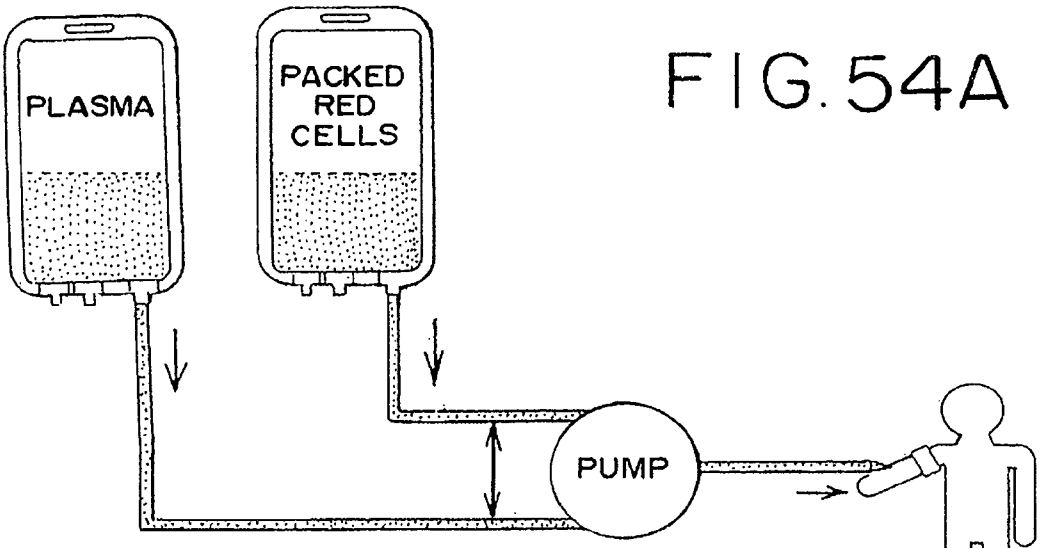

FIG. 54A

FIG. 54B

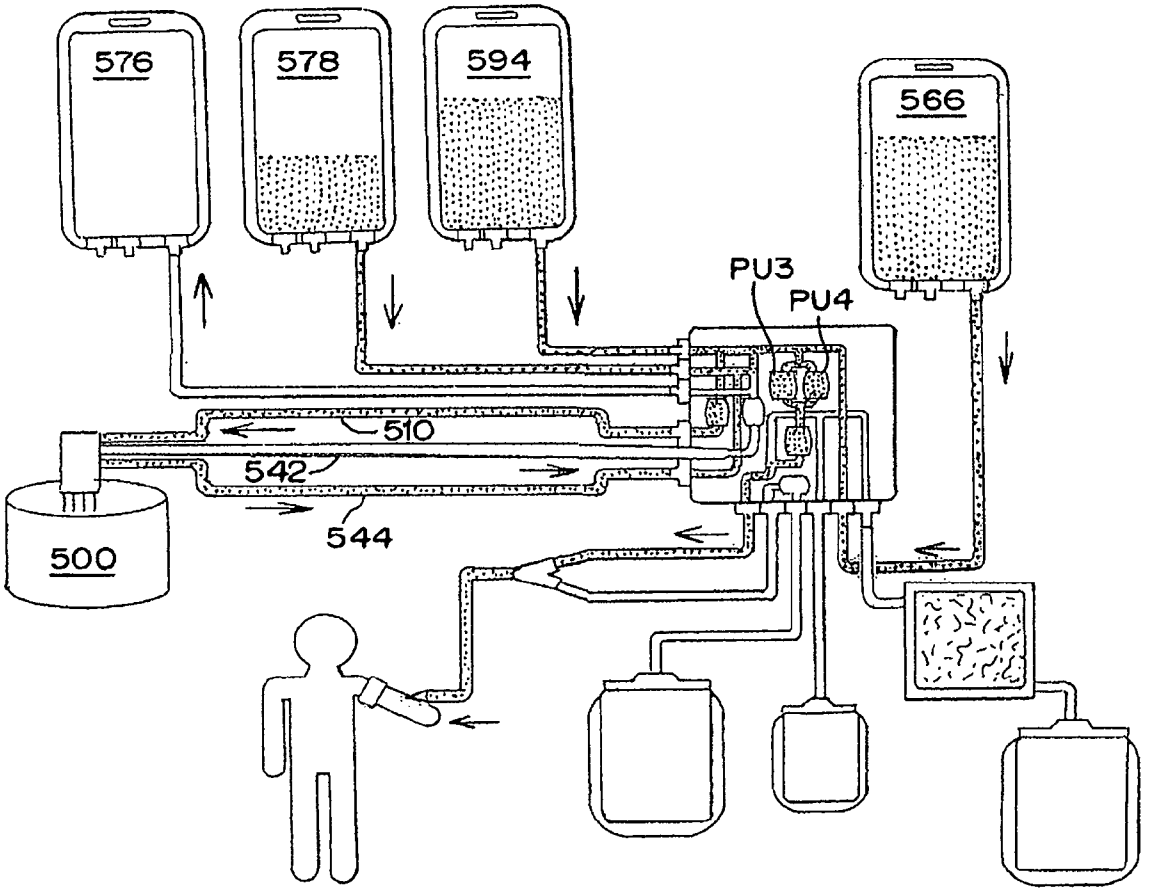

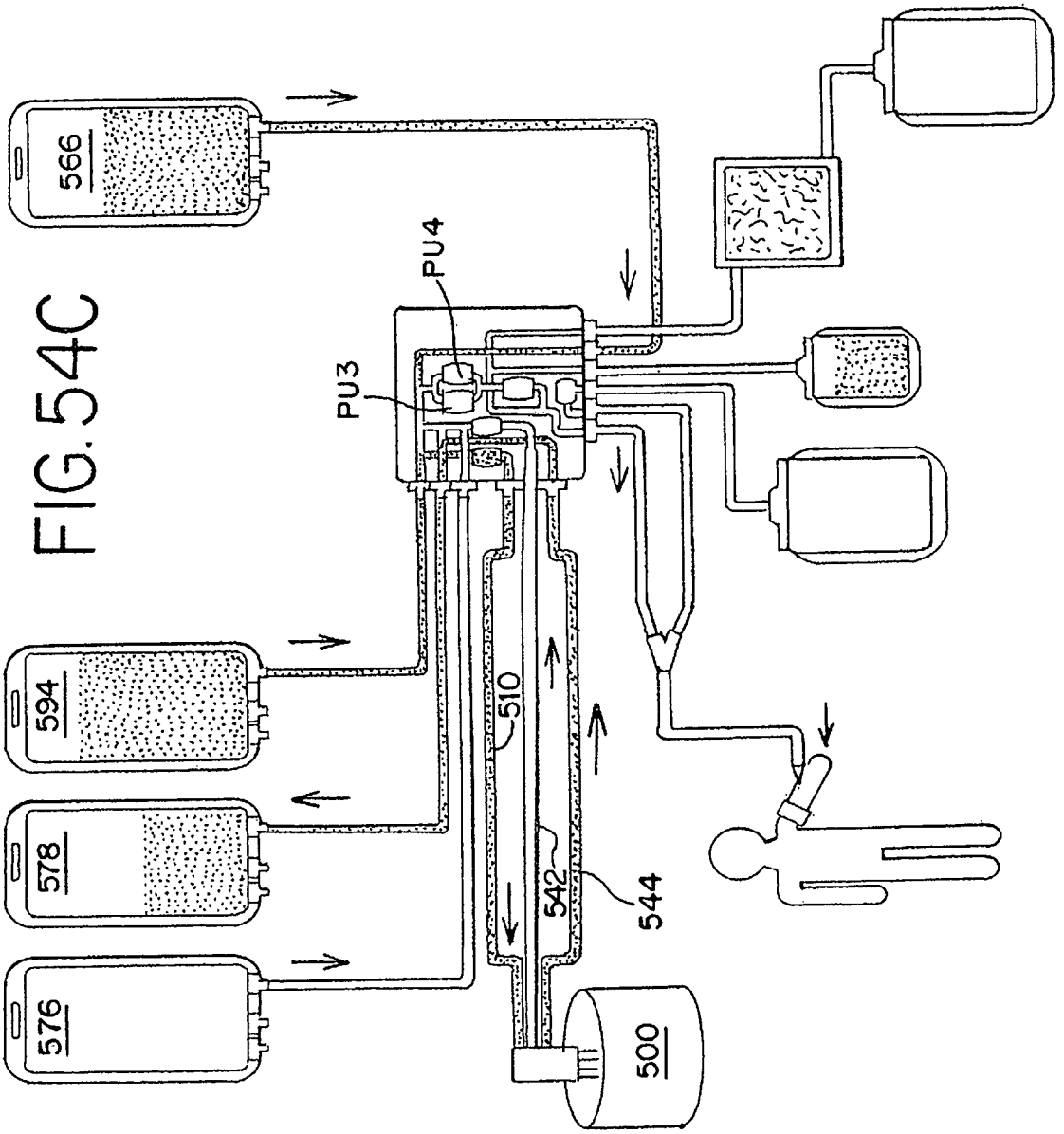

FIG. 54C

FIG.55A

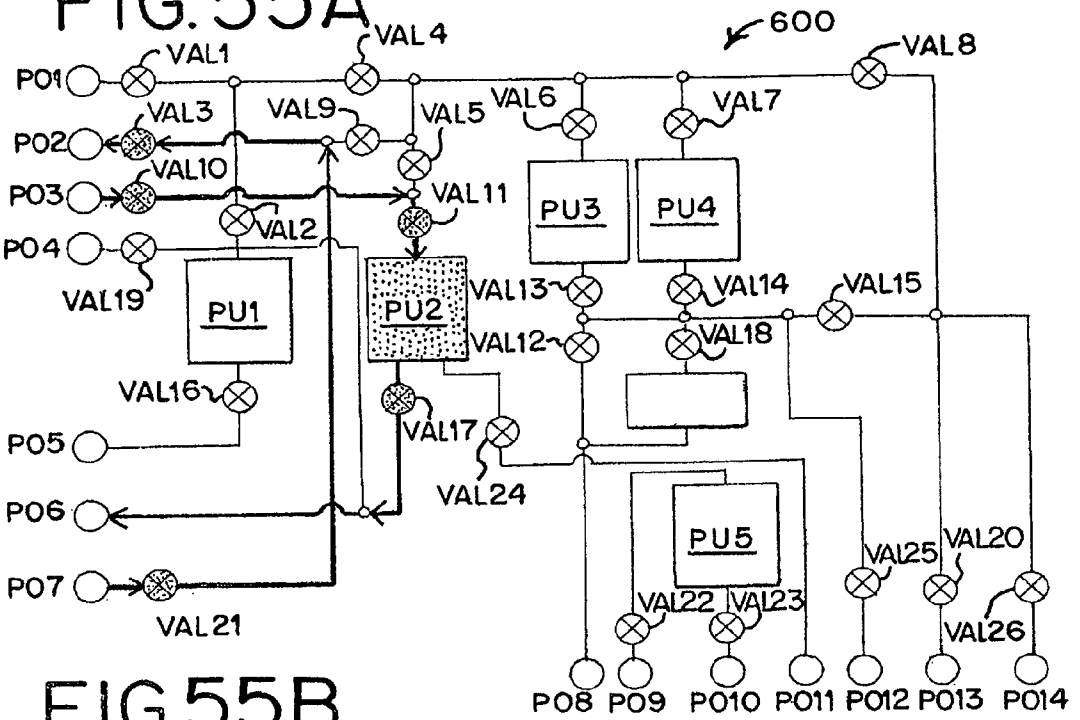

FIG.55B

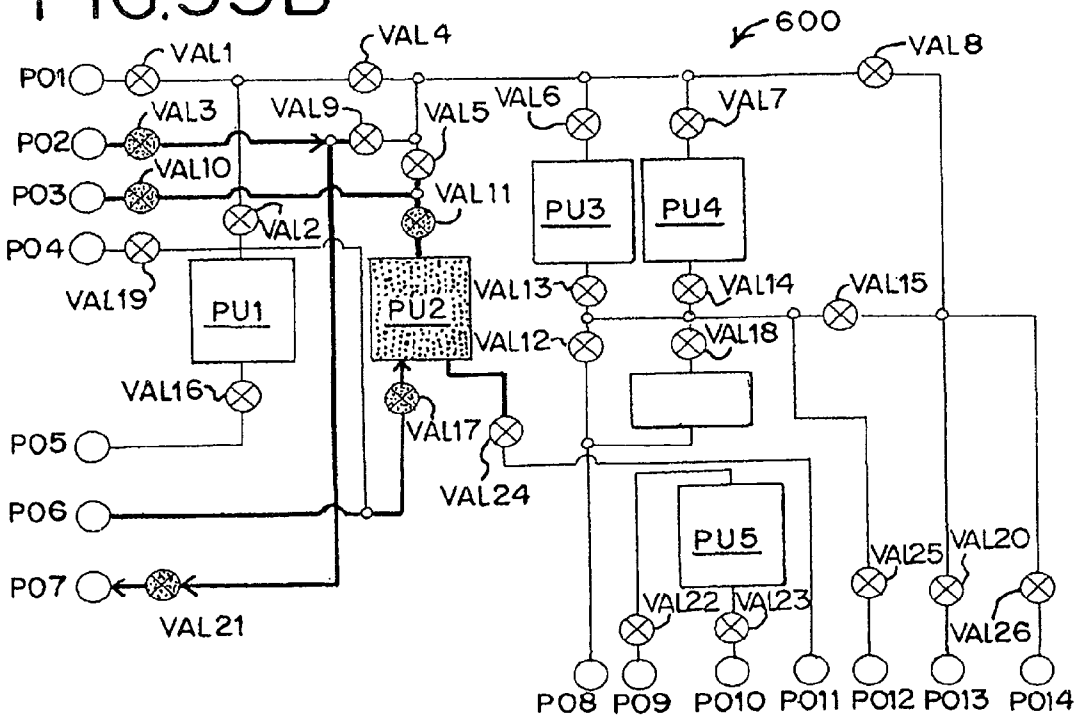

FIG.56A

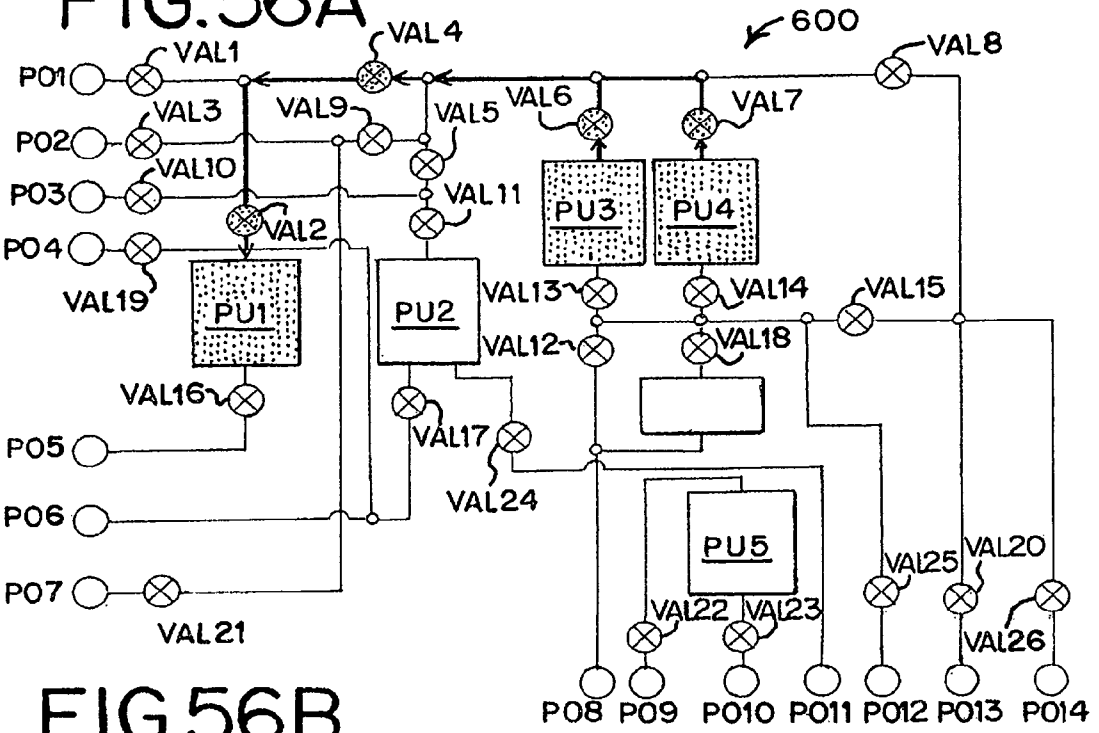

FIG.56B

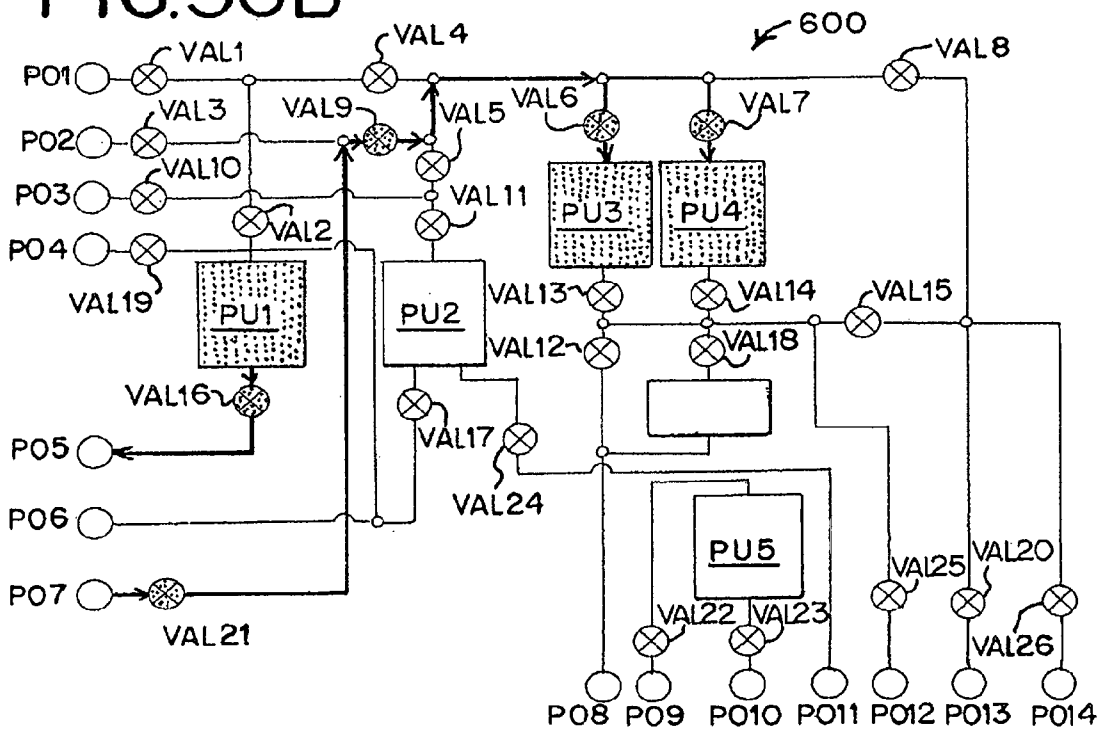

FIG.57

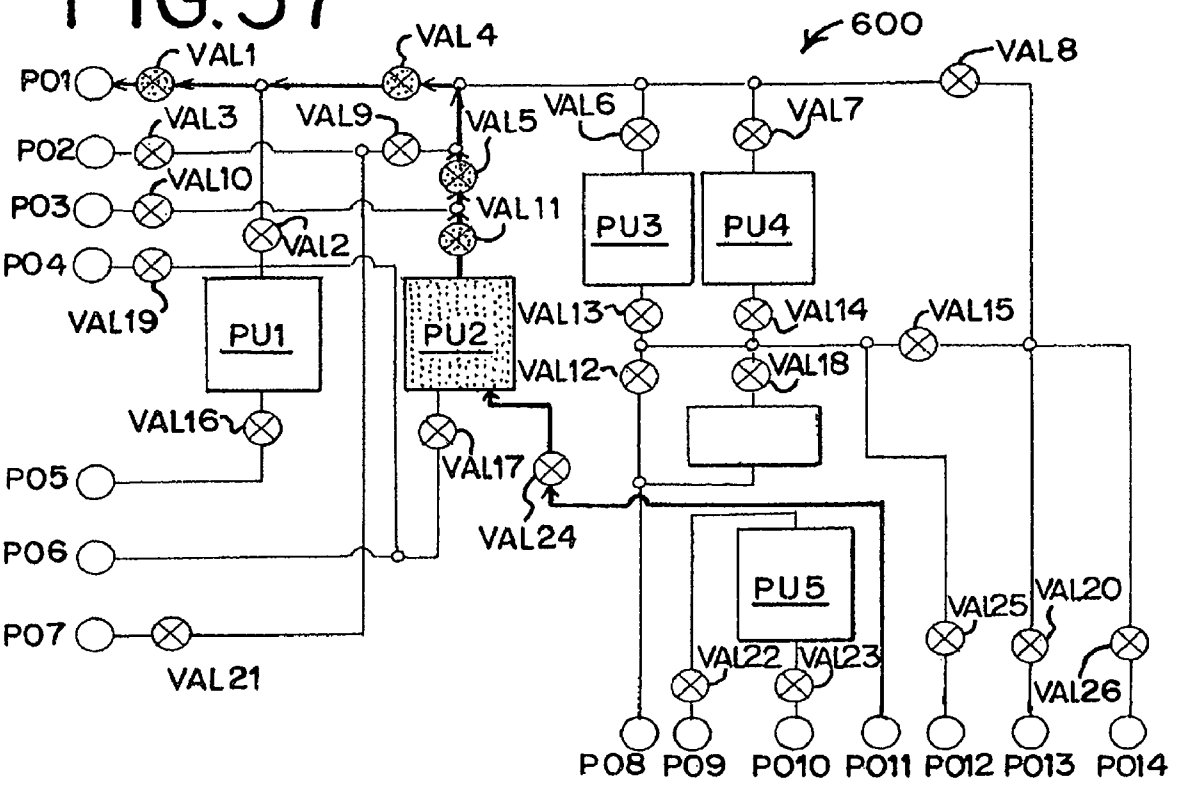
600
VAL1
VAL2
VAL3
VAL4
VAL5
VAL6
VAL7
VAL8
VAL9
VAL10
VAL11
VAL12
VAL13
VAL14
VAL15
VAL16
VAL17
VAL18
VAL19
VAL20
VAL21
VAL22
VAL23
VAL24
VAL25
VAL26
PU1
PU2
PU3
PU4
PU5
P01
P02
P03
P04
P05
P06
P07
P08
P09
P010
P011
P012
P013
P014

FIG.58A

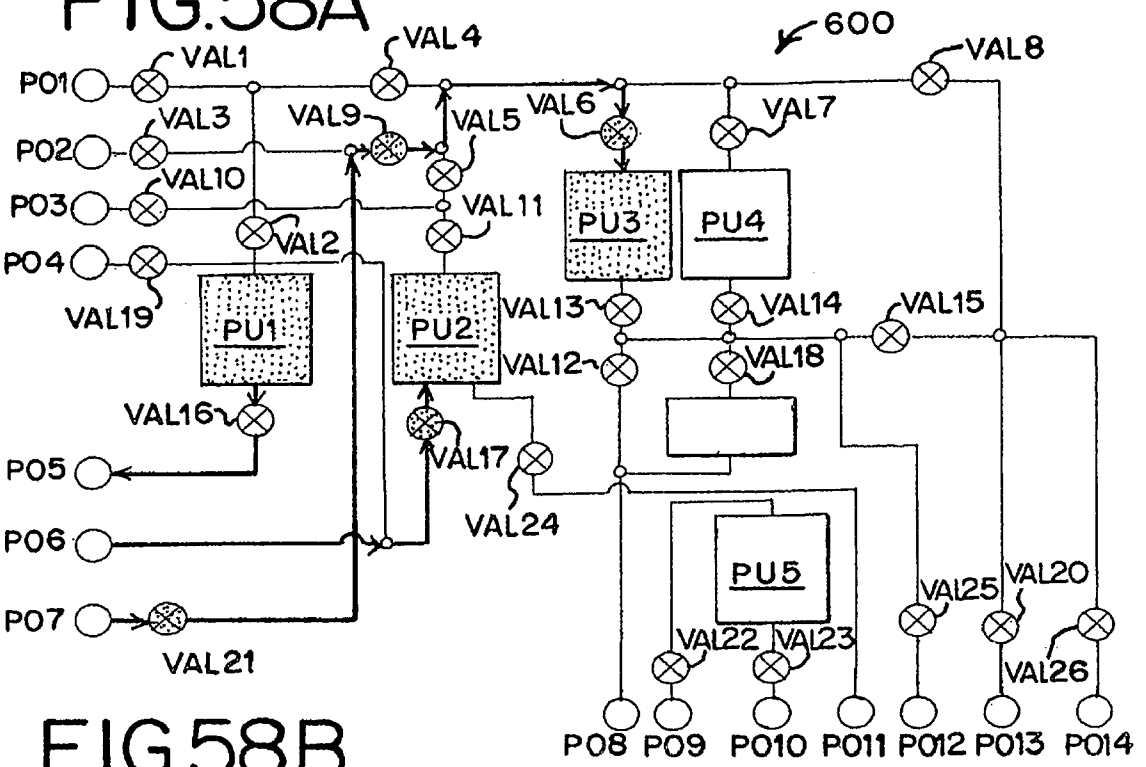

FIG.58B

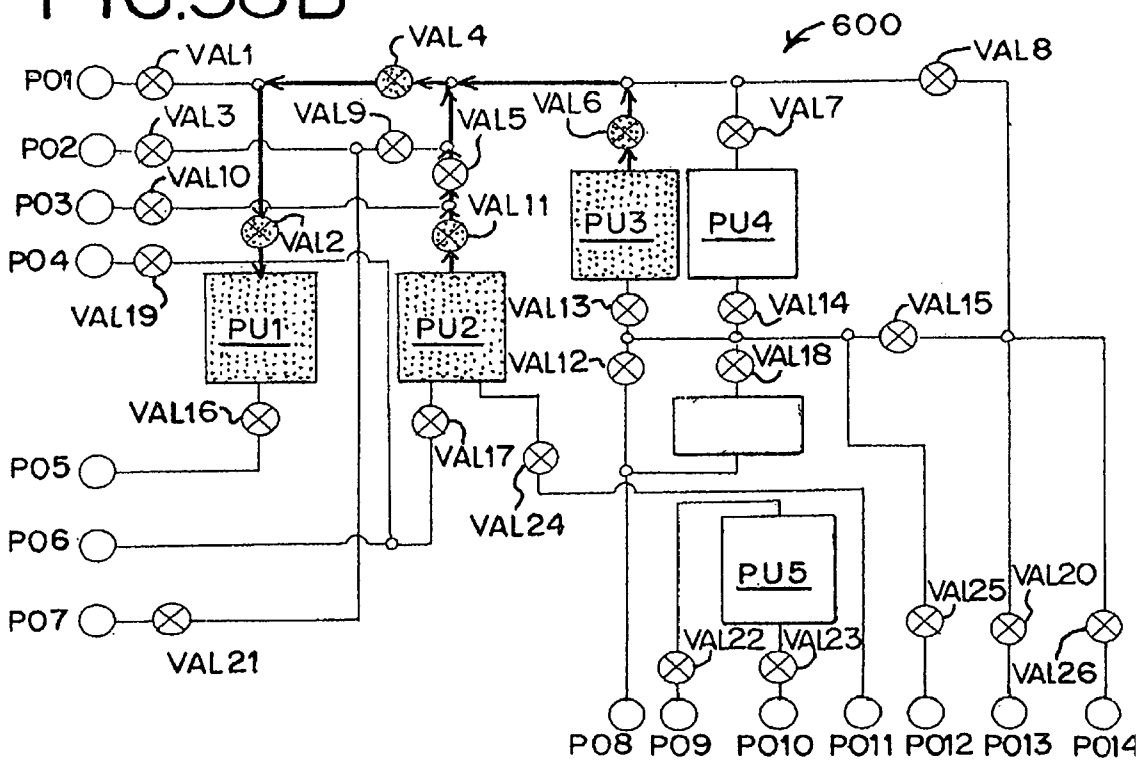

FIG. 59A

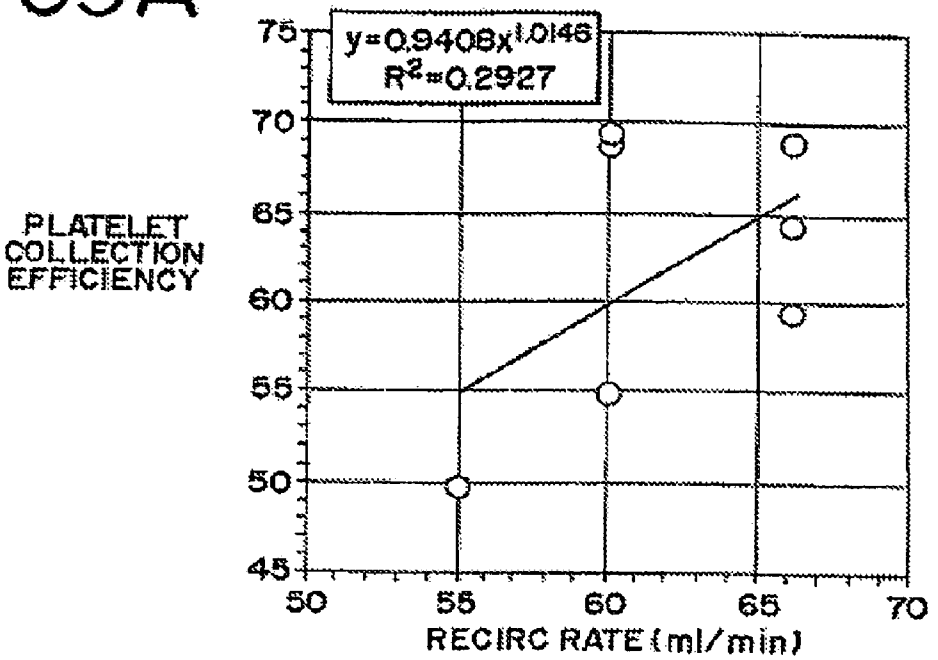

FIG. 59B

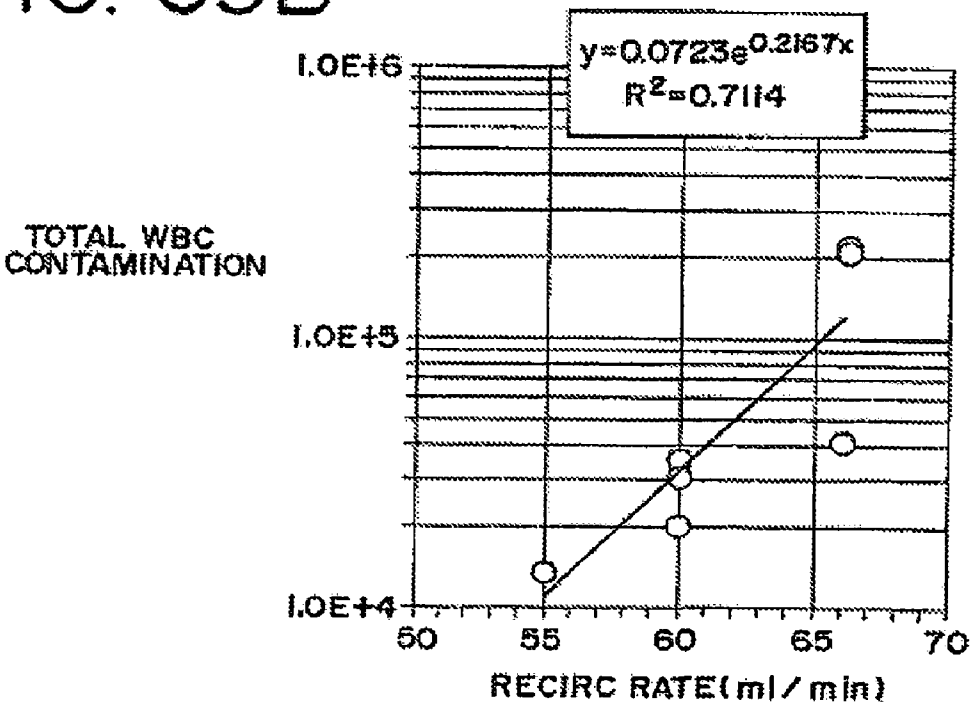

FIG.60A

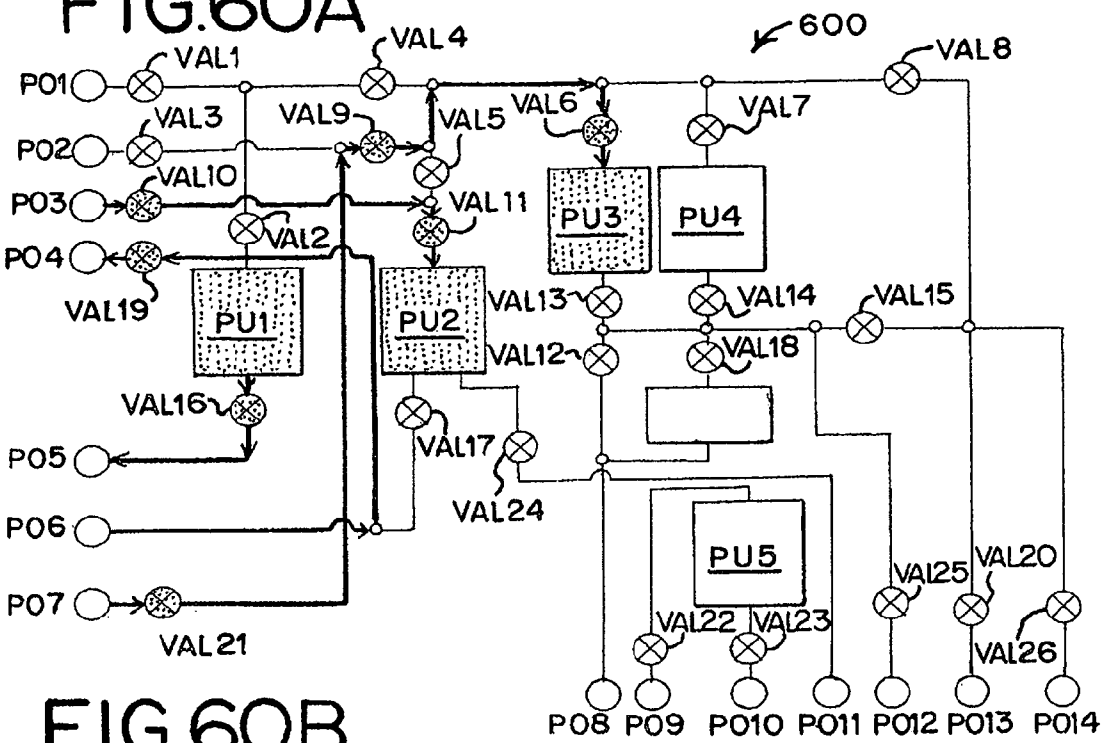

FIG.60B

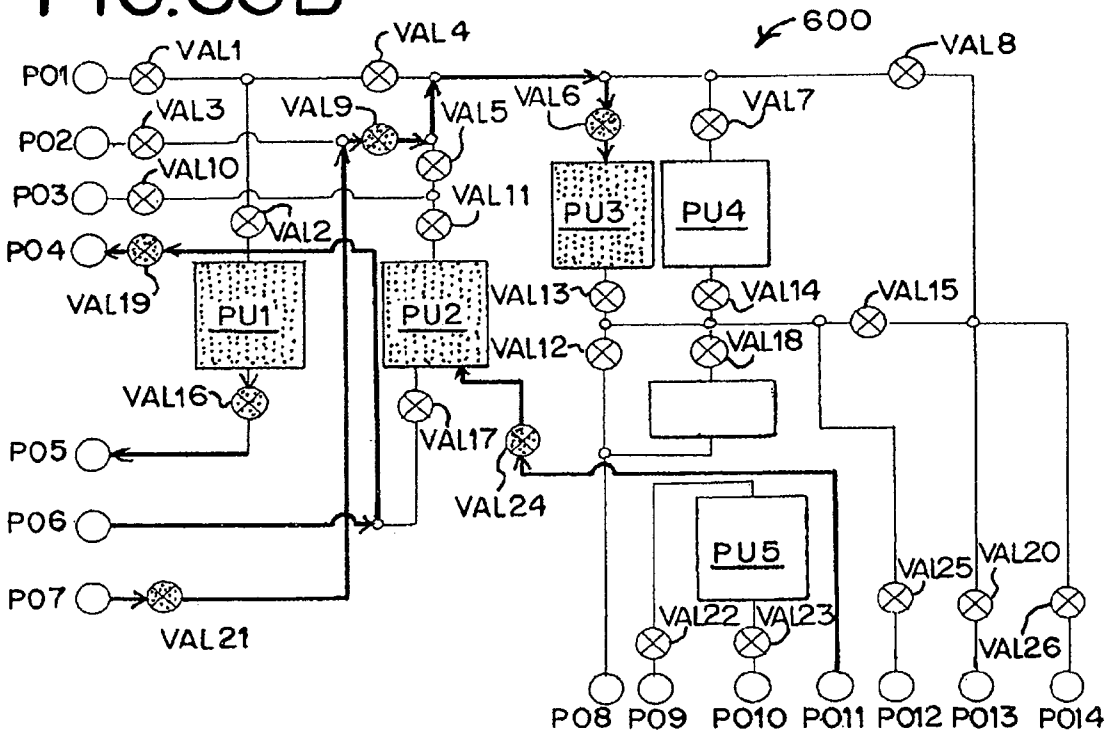

FIG. 61A

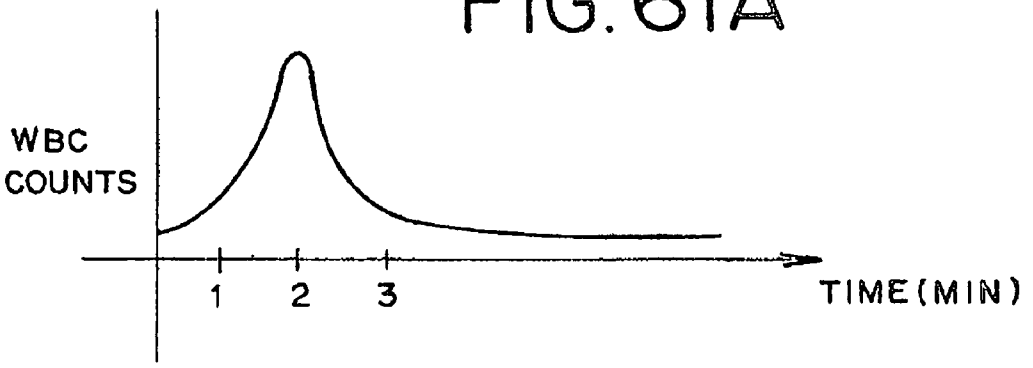

FIG. 61B

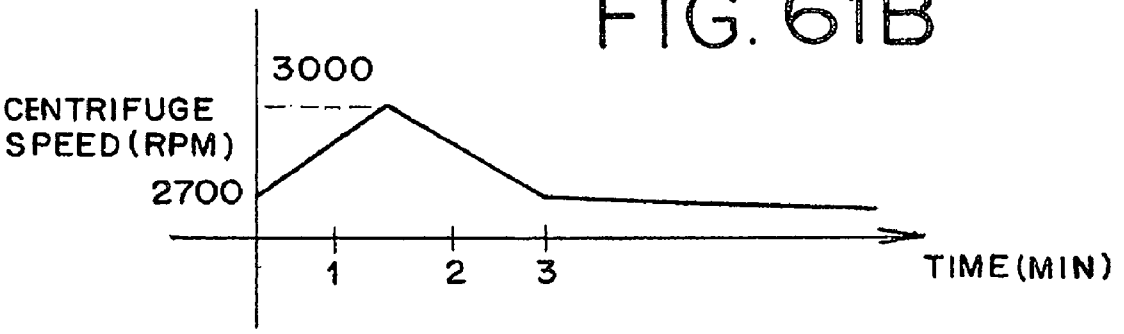

FIG. 61C

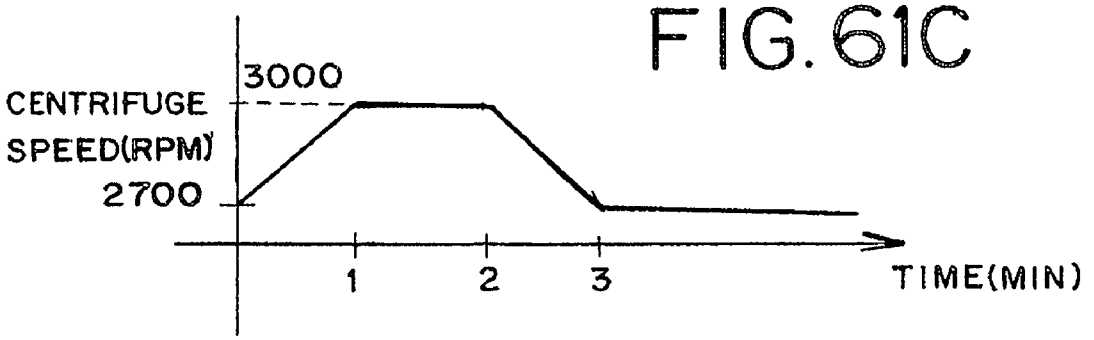

FIG. 61D

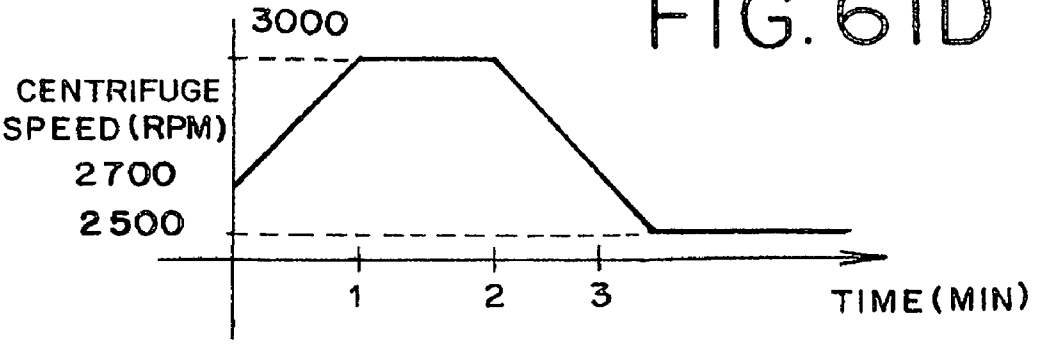

FIG.62

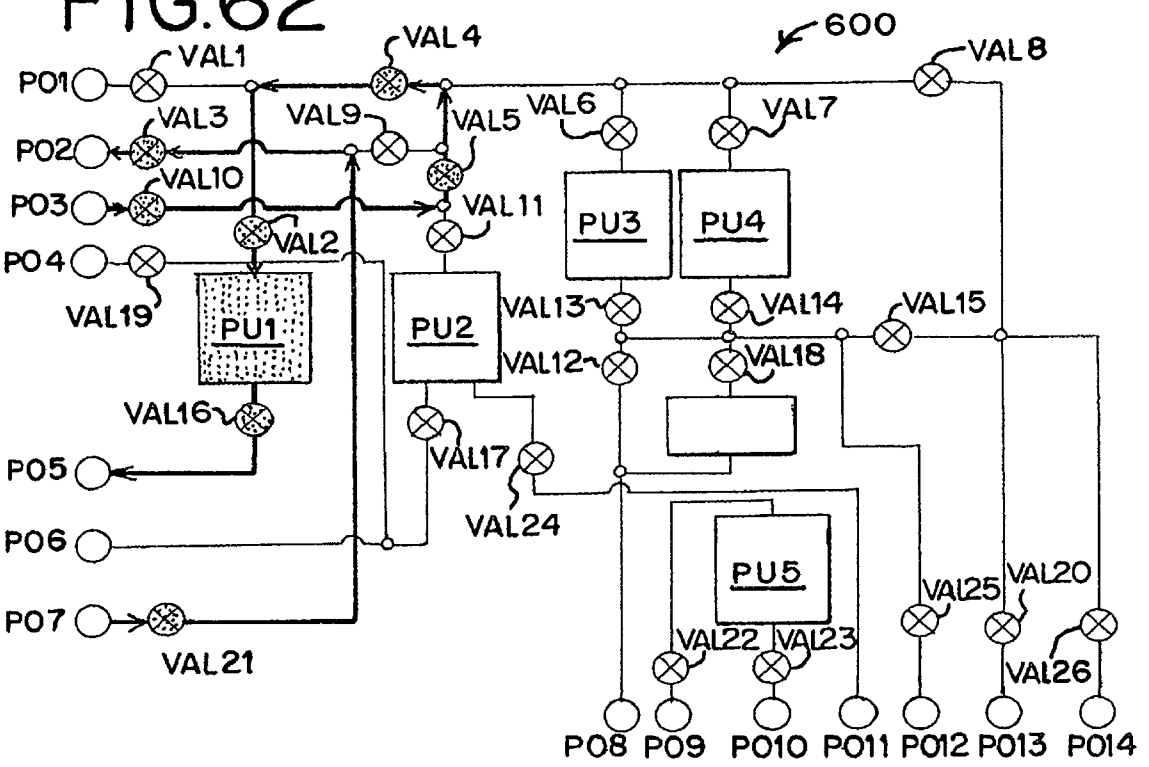
600
VAL1
VAL2
VAL3
VAL4
VAL5
VAL6
VAL7
VAL8
VAL9
VAL10
VAL11
VAL12
VAL13
VAL14
VAL15
VAL16
VAL17
VAL18
VAL19
VAL20
VAL21
VAL22
VAL23
VAL24
VAL25
VAL26
PU1
PU2
PU3
PU4
PU5
P01
P02
P03
P04
P05
P06
P07
P08
P09
P010
P011
P012
P013
P014

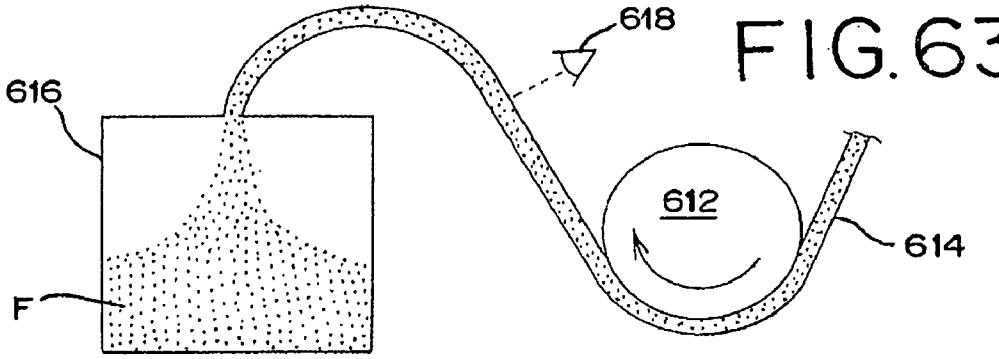

FIG. 63A

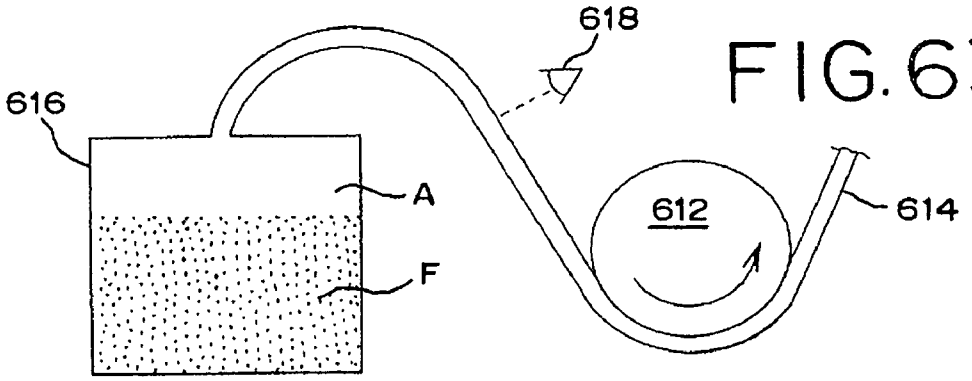

FIG. 63B

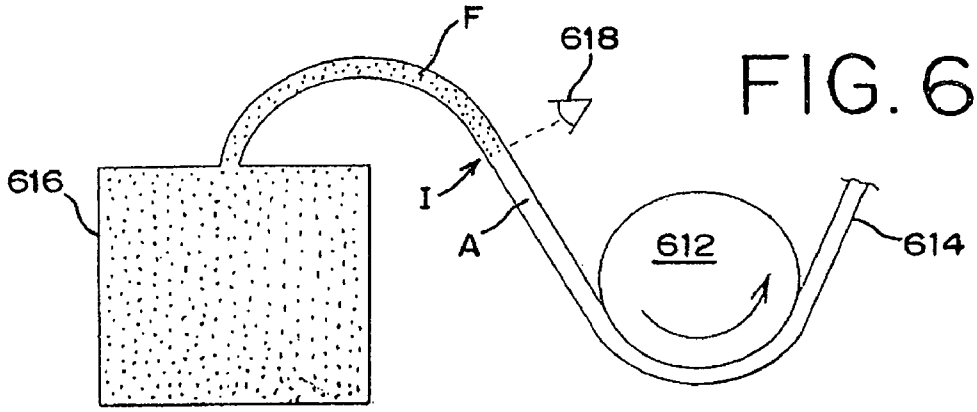

FIG. 63C

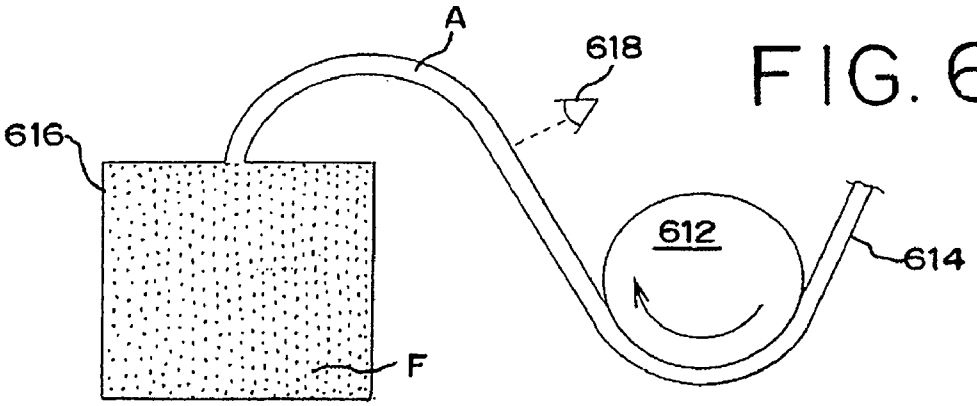

FIG. 63D

FIG. 64A

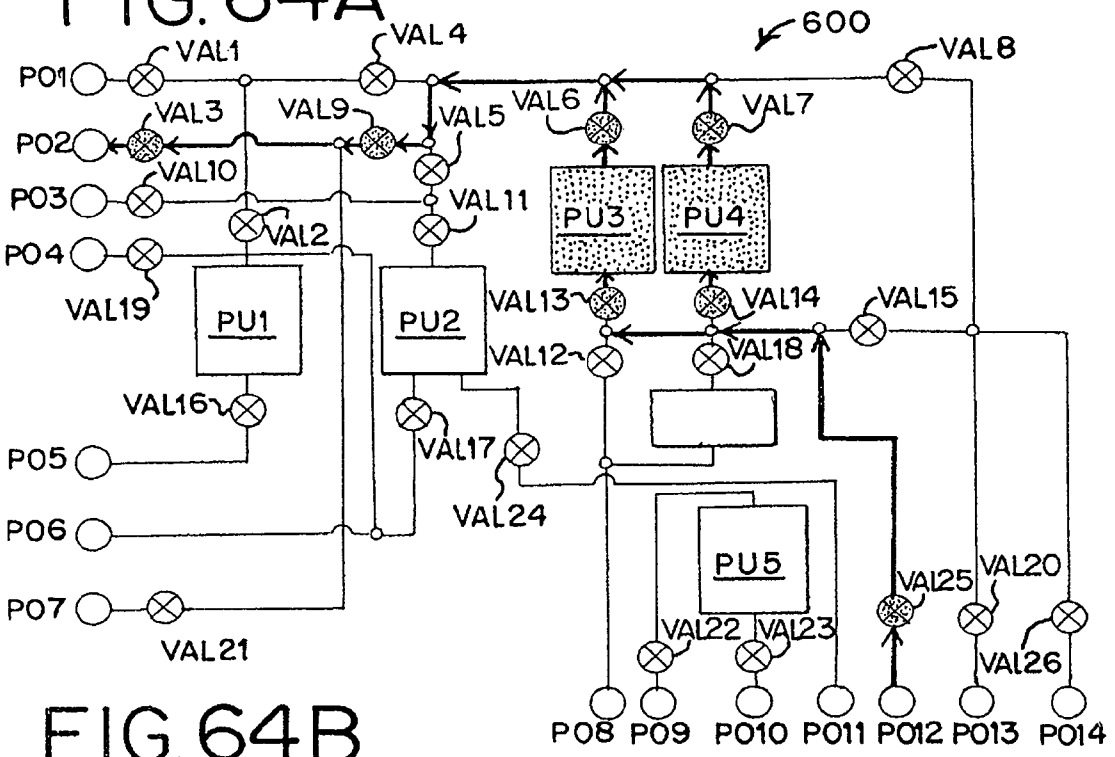

FIG. 64B

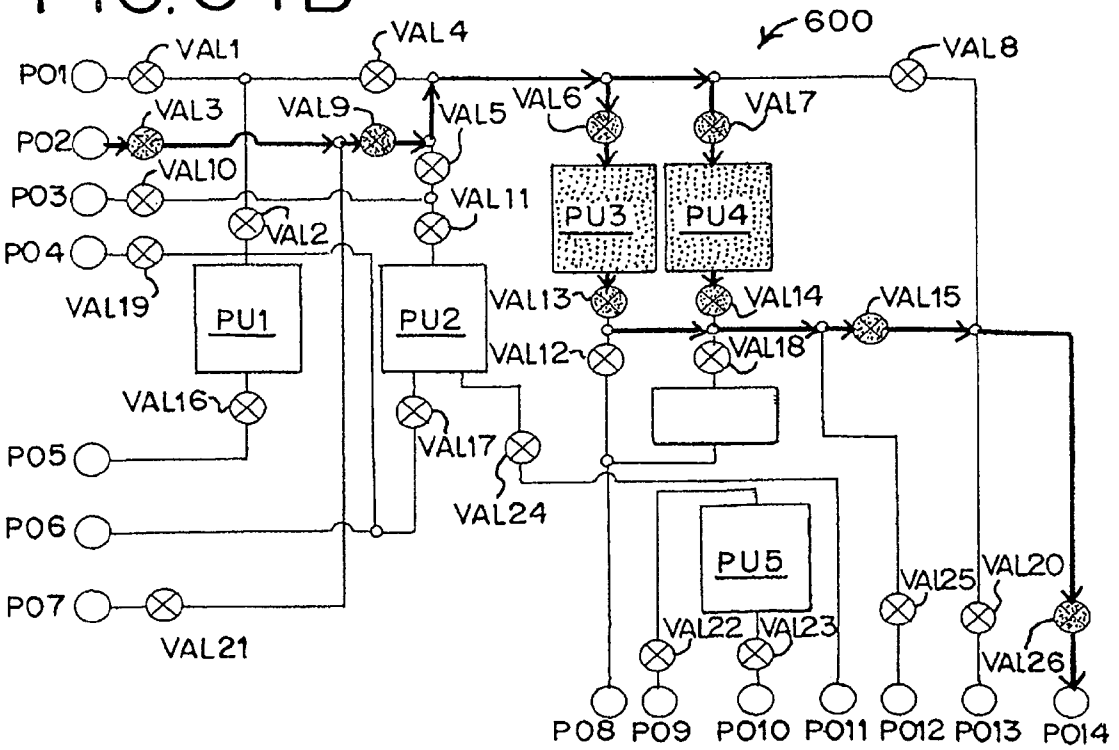

FIG. 64C

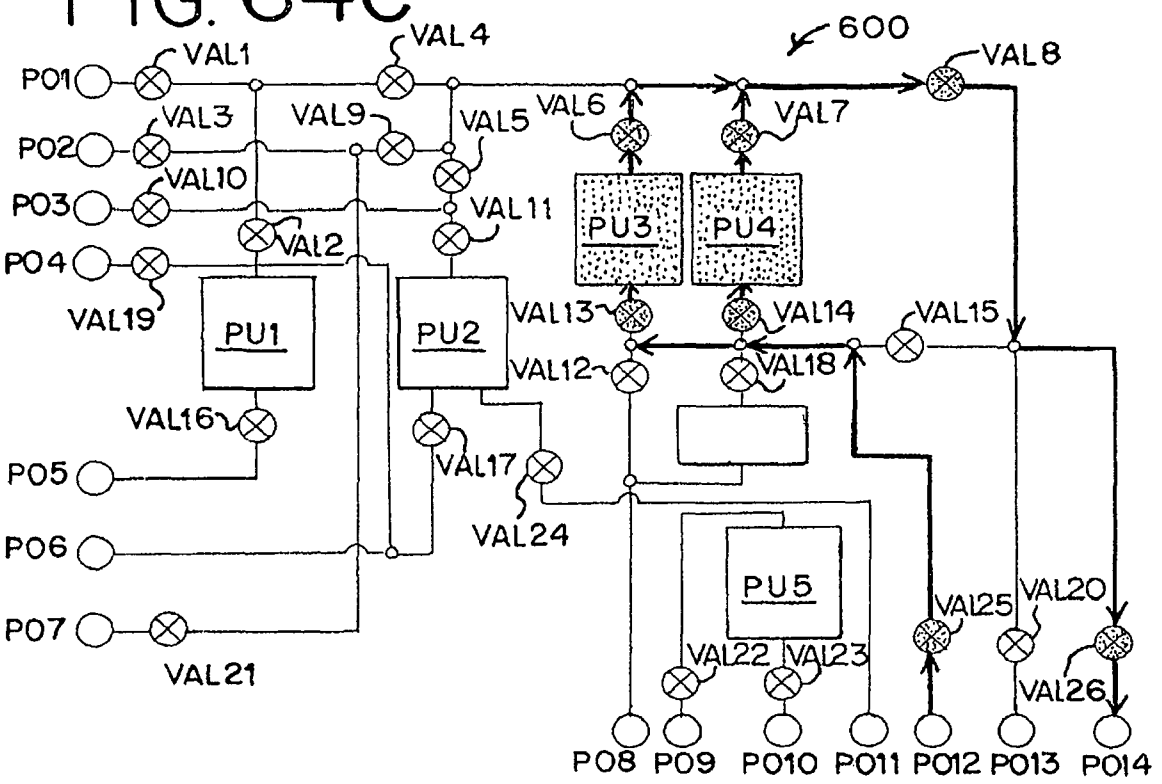
600
VAL1
VAL2
VAL3
VAL4
VAL5
VAL6
VAL7
VAL8
VAL9
VAL10
VAL11
VAL12
VAL13
VAL14
VAL15
VAL16
VAL17
VAL18
VAL19
VAL20
VAL21
VAL22
VAL23
VAL24
VAL25
VAL26
PU1
PU2
PU3
PU4
PU5
P01
P02
P03
P04
P05
P06
P07
P08
P09
P010
P011
P012
P013
P014

FIG. 65

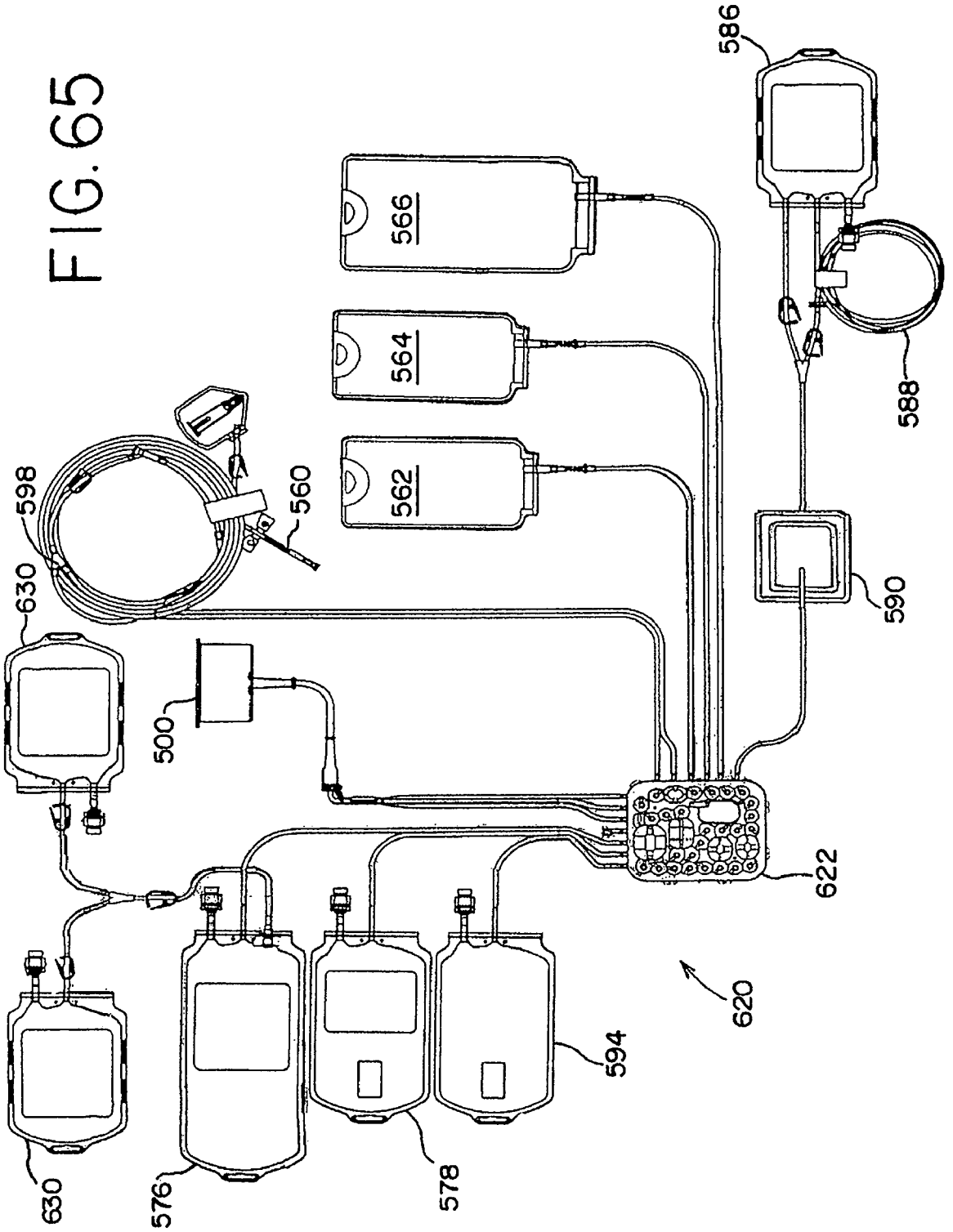

FIG. 66

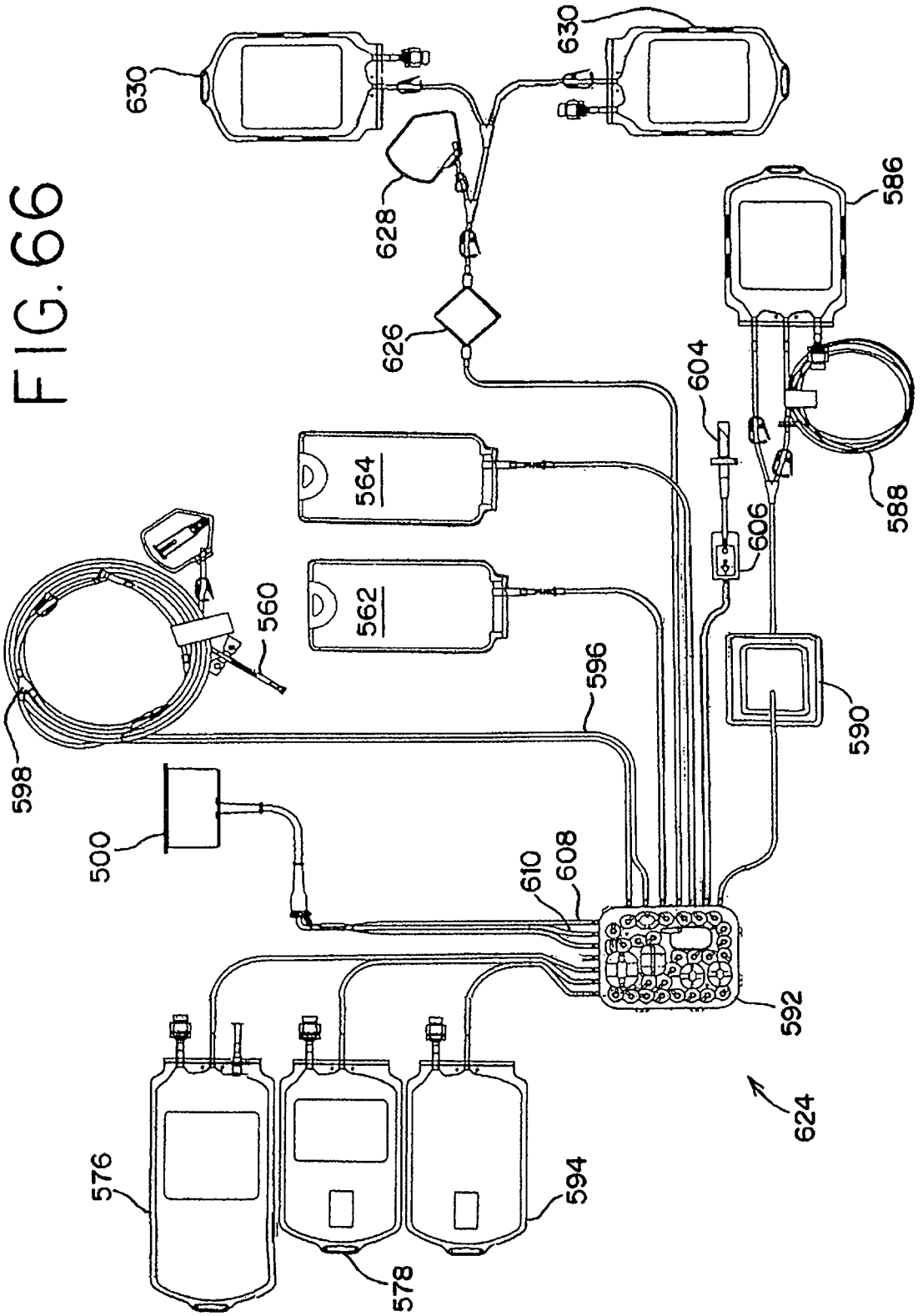
630
630
628
626
586
604
564
588
606
562
560
596
590
598
500
610
608
592
624
576
594
578

FIG.67A

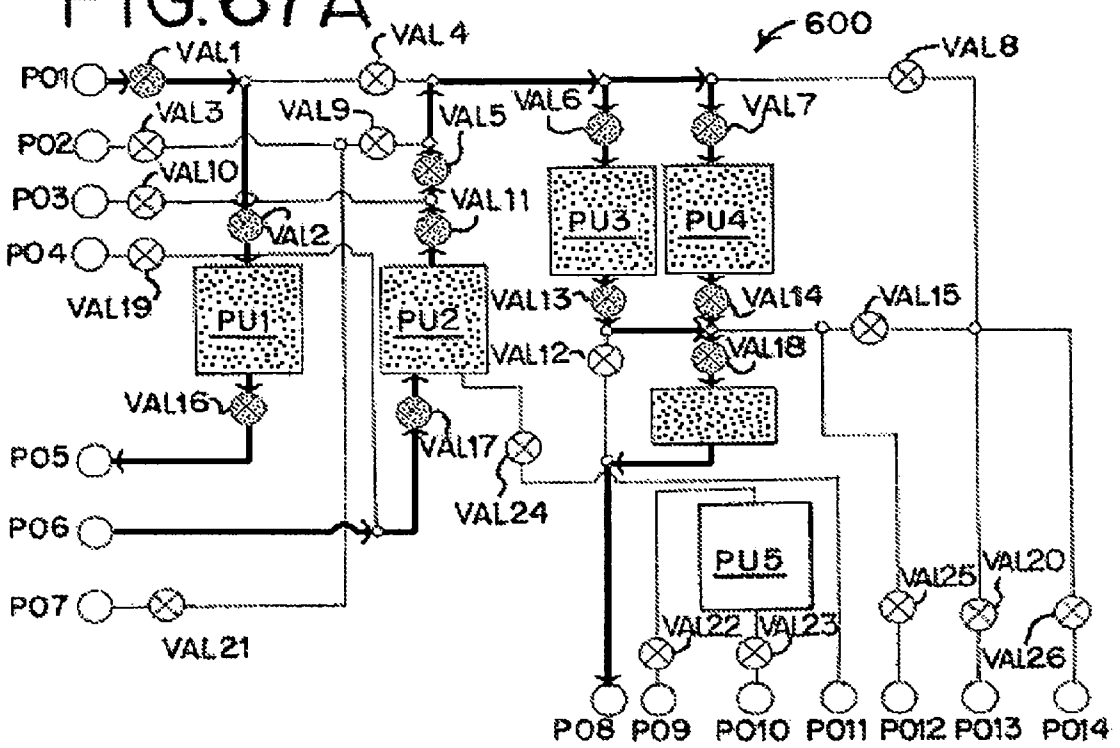

FIG.67B

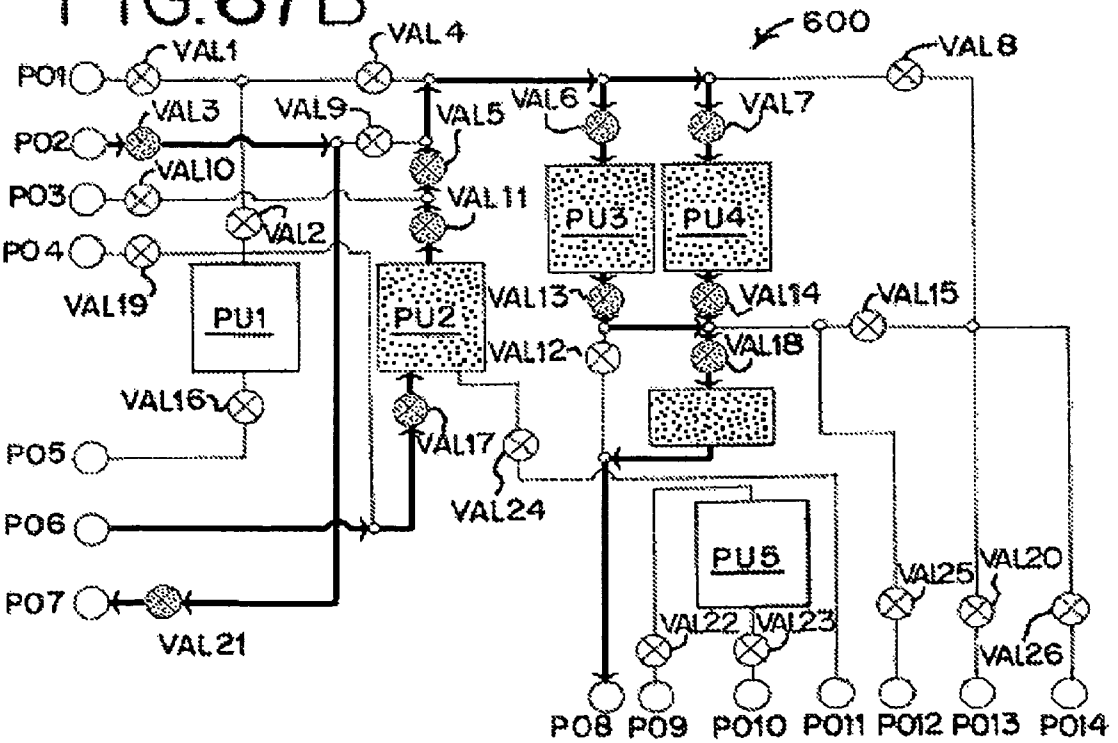

FIG.67C

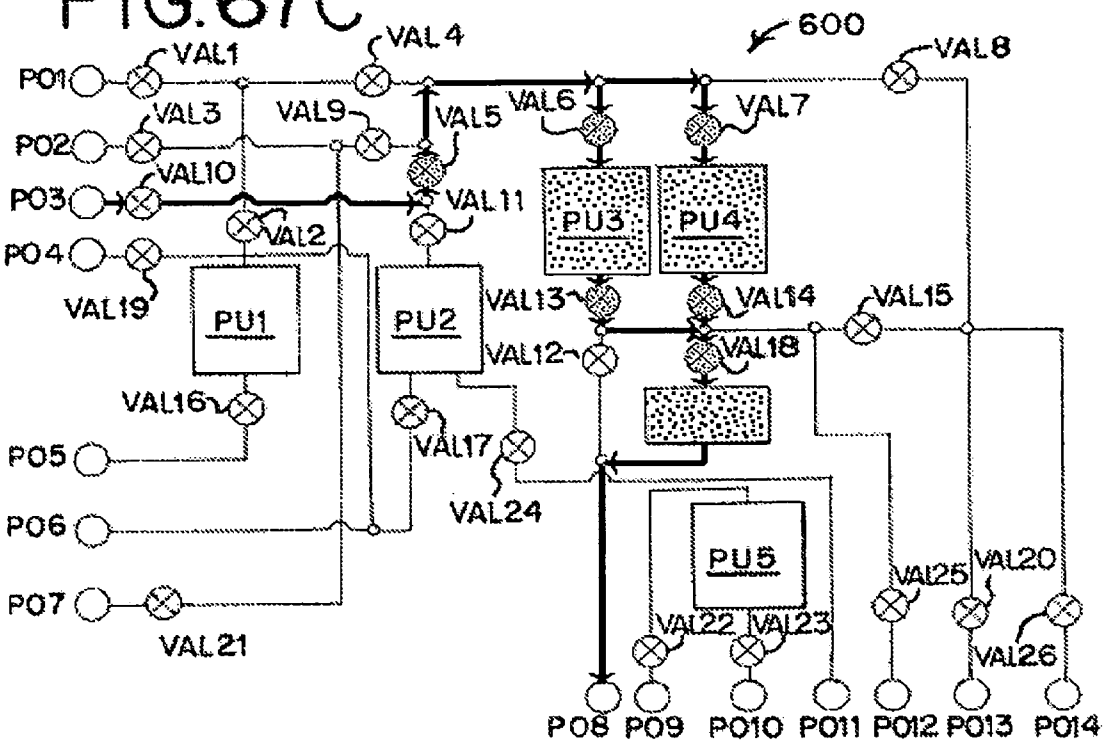

FIG.67D

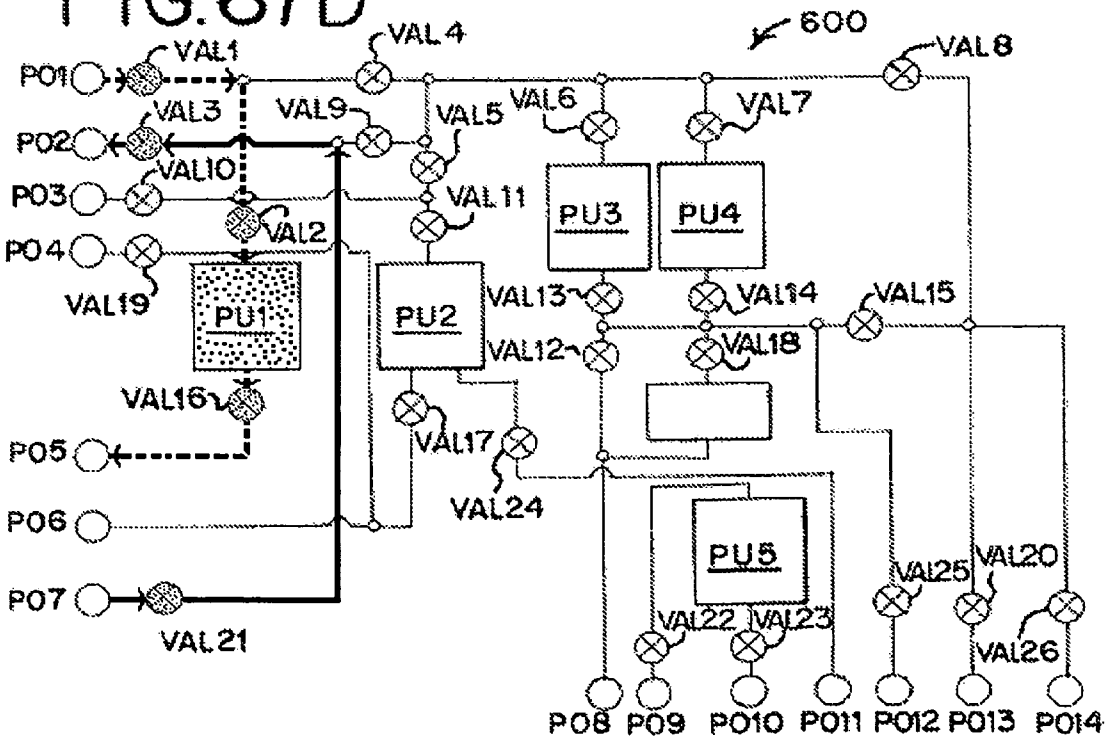

FIG. 67E

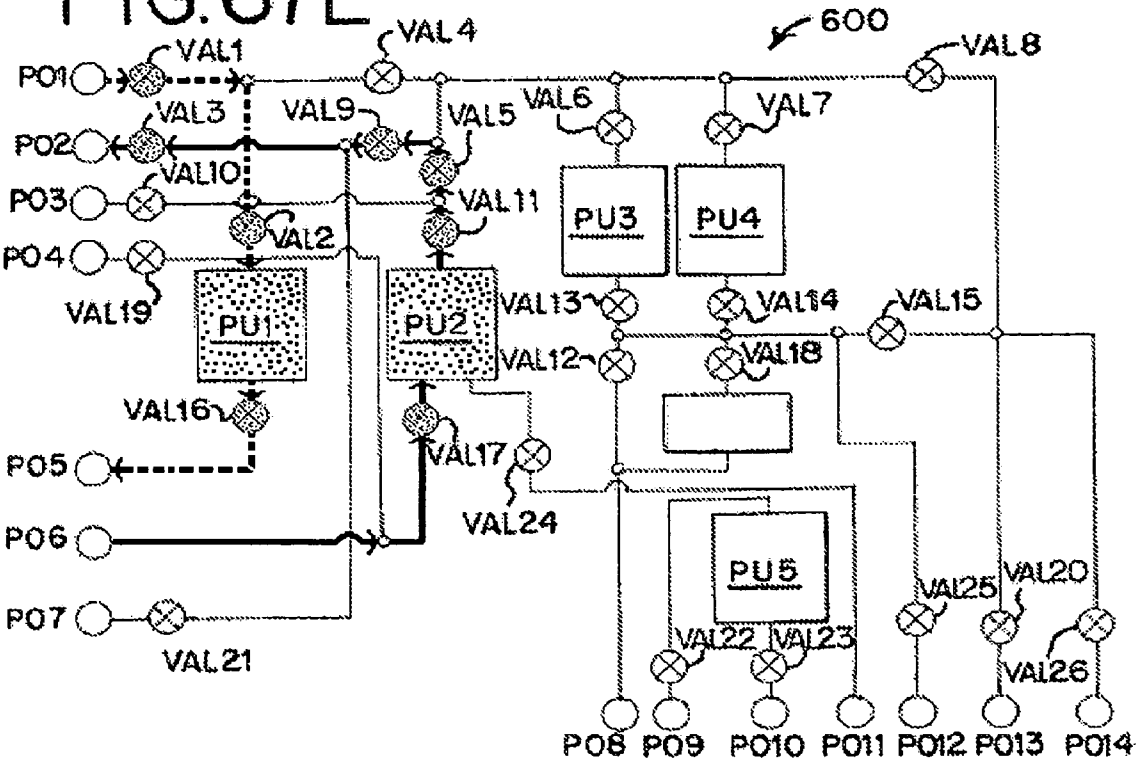
600
VAL1
VAL2
VAL3
VAL4
VAL5
VAL6
VAL7
VAL8
VAL9
VAL10
VAL11
VAL12
VAL13
VAL14
VAL15
VAL16
VAL17
VAL18
VAL19
VAL20
VAL21
VAL22
VAL23
VAL24
VAL25
VAL26
PU1
PU2
PU3
PU4
PU5
P01
P02
P03
P04
P05
P06
P07
P08
P09
P010
P011
P012
P013
P014

FIG.68

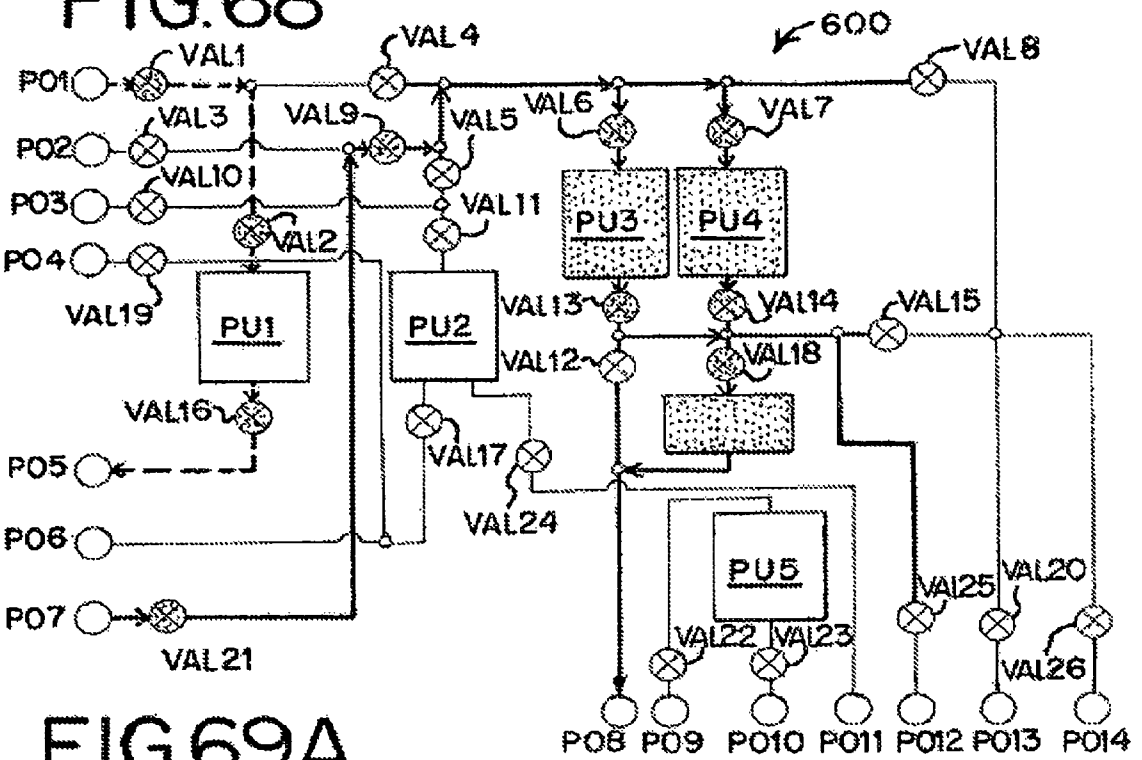

FIG.69A

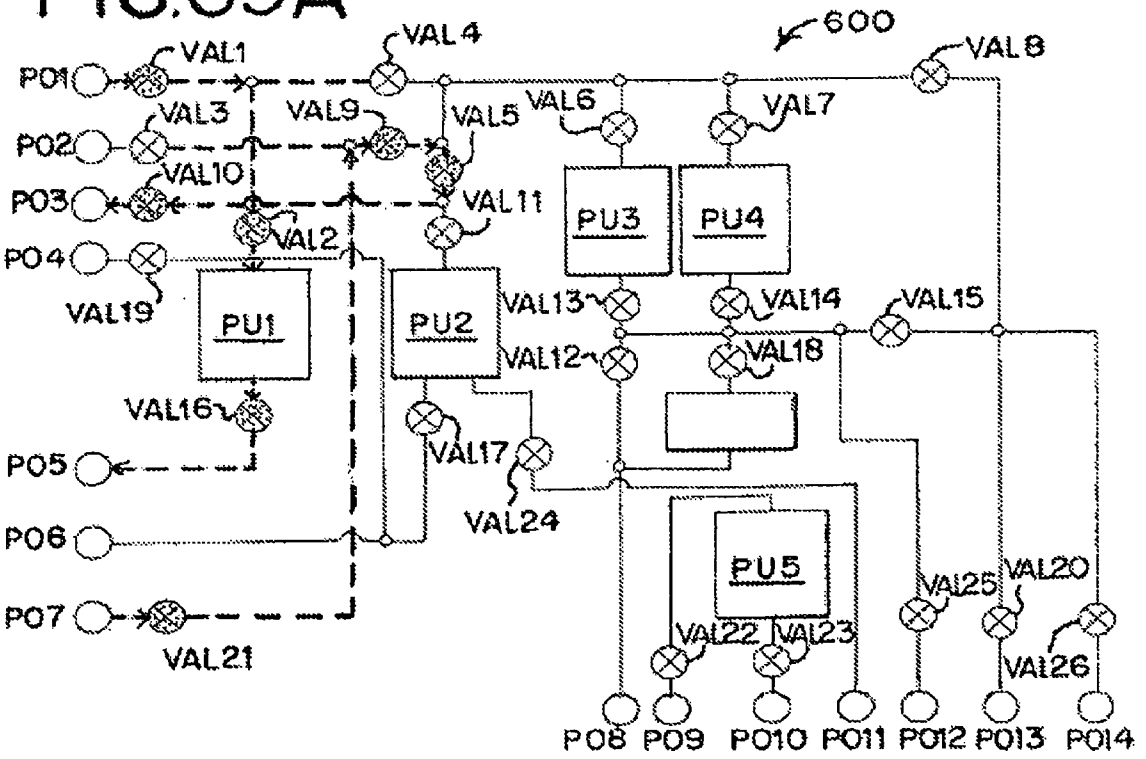

FIG.69B

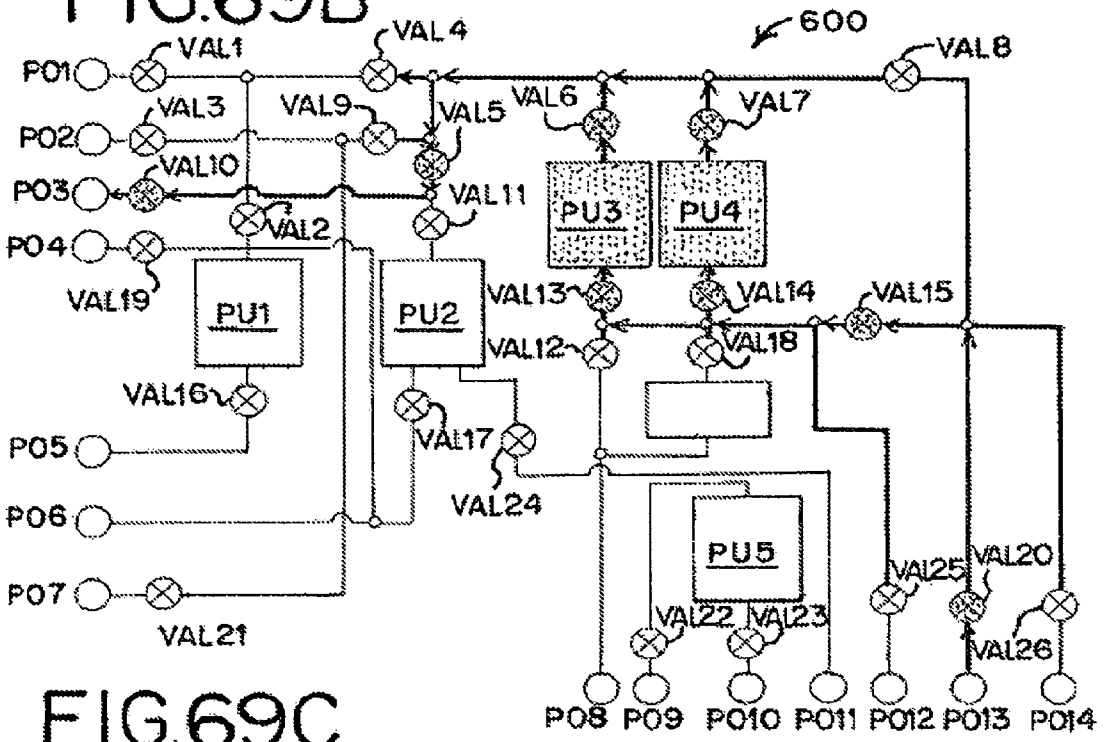

FIG.69C

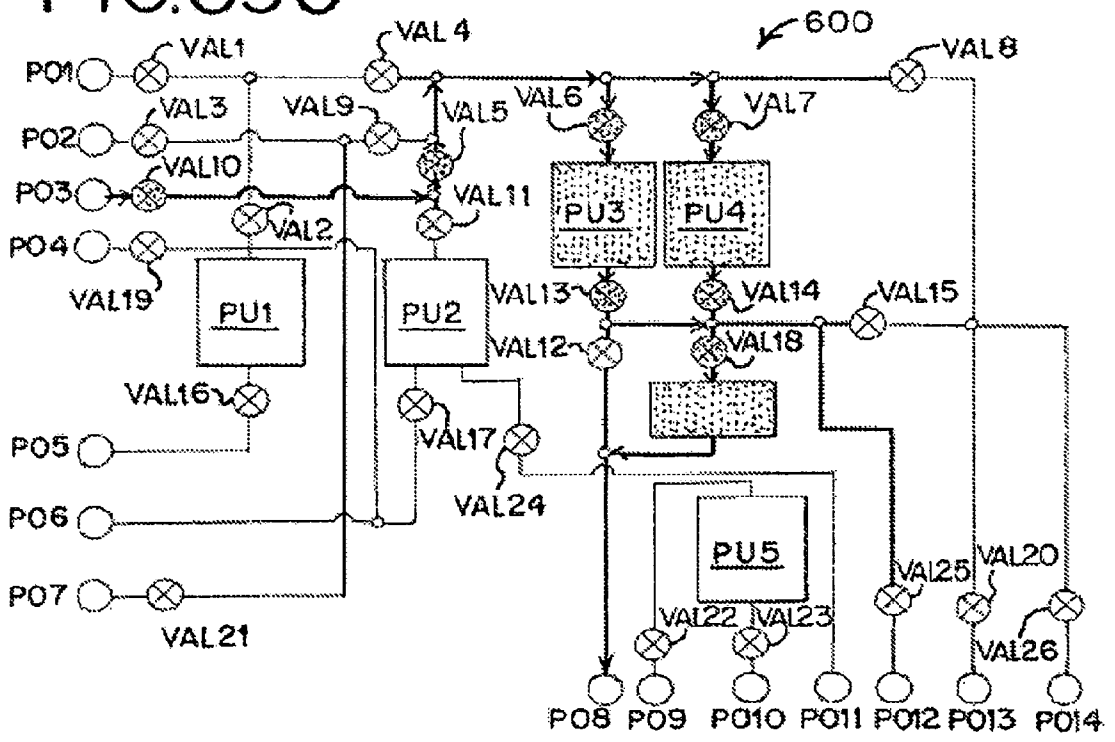

SYSTEMS AND METHODS FOR MID-PROCESSING CALCULATION OF BLOOD COMPOSITION

CROSS REFERENCE TO RELATED APPLICATIONS

This application claims priority from and the benefit of provisional patent application Ser. No. 61/031,987, filed Feb. 27, 2008, which is hereby incorporated herein by reference.

BACKGROUND

1. Field of the Disclosure

The present subject matter relates to systems and methods for processing and collecting blood, blood constituents, or other suspensions of cellular material.

2. Description of Related Art

Today people routinely separate whole blood, usually by centrifugation, into its various therapeutic components, such as red blood cells, platelets, and plasma.

Conventional blood processing methods use durable centrifuge equipment in association with single use, sterile processing systems, typically made of plastic. The operator loads the disposable systems upon the centrifuge before processing and removes them afterwards.

Many conventional blood centrifuges are of a size that does not permit easy transport between collection sites. Furthermore, loading and unloading operations can sometimes be time consuming and tedious.

In addition, a need exists for further improved systems and methods for collecting blood components in a way that lends itself to use in a variety of applications, particularly, but not exclusively, where the operational and performance demands upon such fluid processing systems become more complex and sophisticated, even as the demand for smaller and more portable systems intensifies. The need therefore exists for automated blood processing controllers that can gather and generate more detailed information and control signals to aid the operator in maximizing processing and separation efficiencies.

The present subject matter described below has particular, but not exclusive application, in portable blood processing systems, such as those described in U.S. Pat. Nos. 6,348,156; 6,875,191; 7,011,761; 7,087,177; and 7,297,272 and U.S. Patent Application Publication No. 2005/0137516, which are hereby incorporated herein by reference, and such as embodied in the ALYX® blood processing systems marketed by Fenwal, Inc. of Lake Zurich, Ill.

SUMMARY

There are several aspects of the present subject matter which may be embodied separately or together in the devices and systems described and claimed below. These aspects may be employed alone or in combination with other aspects of the subject matter described herein, and the description of these aspects together is not intended to preclude the use of these aspects separately or the claiming of such aspects separately as set forth in the claims appended hereto.

In one aspect, a blood separation method comprises processing blood in a device to separate platelets from the blood and conveying fluid containing platelets from the device by an outlet line. The platelets in the outlet line are optically measured. With said optical measurement, a platelet pre-count is calculated. When the calculation is complete, additional blood is processed in the device.

In another separate aspect, a blood separation method comprises processing blood in a device to separate platelets from the blood and circulating a fluid containing platelets from the device through an outlet line and then back into the device until the fluid is substantially uniform. Simultaneously, the platelets in the outlet line are optically measured and a current platelet yield, a platelet pre-count, the volume of blood to process to collect a target amount of platelets, and/or the processing time required to collect a target amount of platelets is calculated, based at least in part on the optical measurement of the platelets in the outlet line. After performing the calculation, additional blood is processed in the device.

In yet another separate aspect, a blood separation method comprises spinning a device to separate platelets from blood contained therein, conveying fluid containing platelets from the device by an outlet line, and optically measuring the platelets in the outlet line. A current platelet yield, a platelet pre-count, the volume of blood to process to collect a target amount of platelets, and/or the processing time required to collect a target amount of platelets is calculated based at least in part on the optical measurement. If current platelet yield is calculated, it is compared to a target and, if the calculated yield exceeds the target, the device is spun at a greater speed to reduce the amount of platelets in the outlet line. Alternatively, if the calculated yield falls below the target, the device is spun at a slower speed to increase the amount of platelets in the outlet line. After performing the calculation, additional blood is processed in the device.

In yet another separate aspect, a blood separation method comprises spinning a device at a separation speed sufficient to separate blood in the device into a red blood cell layer, a plasma layer, and a layer containing platelets. The separated plasma is conveyed from the device through an outlet line thereof and the separated red blood cells are conveyed from the device through another outlet line, while substantially all of the layer containing platelets is retained in the device. The device is then spun in alternating directions at a relatively low mixing speed to mix the separated plasma, the separated red blood cells, and the layer containing platelets remaining in the device and then is spun at a harvest speed that is less than the separation speed to separate the mixed plasma, red blood cells, and layer containing platelets into a layer of red blood cells and a layer containing plasma and platelets. The layer containing plasma and platelets is conveyed from the device through one of the outlet lines and then back into the device to reduce the number of red blood cells and leukocytes in the layer containing plasma and platelets. The platelets in the outlet line are optically measured while simultaneously circulating the layer containing plasma and platelets from the device through the outlet line and then back into the device. A current platelet yield, a platelet pre-count, the volume of blood to process to collect a target amount of platelets, and/or the processing time required to collect a target amount of platelets is calculated, based at least in part on the optical measurement of the platelets in the outlet line. After performing the calculation, additional blood is processed in the device.

BRIEF DESCRIPTION OF THE DRAWINGS

FIG. **1** is a perspective view of a blood or blood component processing system, with the disposable processing set of the system shown out of association with the processing device prior to use;

FIG. **2** is a perspective view of the system shown in FIG. **1**, with the doors to the centrifuge station and pump and valve station being shown open to accommodate mounting of the processing set;

FIG. **3** is a perspective view of the system shown in FIG. **1** with the processing set fully mounted on the processing device and ready for use;

FIG. **4** is a right perspective front view of the case that houses the processing device shown in FIG. **1**, with the lid closed for transporting the device;

FIG. **5** is a schematic view of a blood processing circuit, which can be programmed to perform a variety of different blood processing procedures in association with the device shown in FIG. **1**;

FIG. **6** is an exploded perspective view of a cassette, which contains the programmable blood processing circuit shown in FIG. **5**, and the pump and valve station on the processing device shown in FIG. **1**, which receives the cassette for use;

FIG. **7** is a plane view of the front side of the cassette shown in FIG. **6**;

FIG. **8** is an enlarged perspective view of a valve station on the cassette shown in FIG. **6**;

FIG. **9** is a plane view of the back side of the cassette shown in FIG. **6**;

FIG. **10** is a plane view of a universal processing set, which incorporates the cassette shown in FIG. **6**, and which can be mounted on the device shown in FIG. **1**, as shown in FIGS. **2** and **3**;

FIG. **11** is a top section view of the pump and valve station in which the cassette as shown in FIG. **6** is carried for use;

FIG. **12** is a schematic view of a pneumatic manifold assembly, which is part of the pump and valve station shown in FIG. **6**, and which supplies positive and negative pneumatic pressures to convey fluid through the cassette shown in FIGS. **7** and **9**;

FIG. **13** is a perspective front view of the case that houses the processing device, with the lid open for use of the device, and showing the location of various processing elements housed within the case;

FIG. **14** is a schematic view of the controller that carries out the process control and monitoring functions of the device shown in FIG. **1**;

FIGS. **15**A, **15**B, and **15**C are schematic side views of the blood separation chamber that the device shown in FIG. **1** incorporates, showing the plasma and red blood cell collection tubes and the associated two in-line sensors, which detect a normal operating condition (FIG. **15**A), an overspill condition (FIG. **15**B), and an underspill condition (FIG. **15**C);

FIG. **16** is a perspective view of a fixture that, when coupled to the plasma and red blood cell collection tubes, holds the tubes in a desired viewing alignment with the in-line sensors, as shown in FIGS. **15**A, **15**B, and **15**C;

FIG. **17** is a perspective view of the fixture shown in FIG. **16**, with a plasma cell collection tube, a red blood cell collection tube, and a whole blood inlet tube attached, gathering the tubes in an organized, side-by-side array;

FIG. **18** is a perspective view of the fixture and tubes shown in FIG. **17**, as being placed into viewing alignment with the two sensors shown in FIGS. **15**A, **15**B, and **15**C;

FIG. **19** is a schematic view of the sensing station, of which the first and second sensors shown in FIGS. **15**A, **15**B, and **15**C form a part;

FIG. **20** is a graph of optical densities as sensed by the first and second sensors plotted over time, showing an underspill condition;

FIG. **21** is an exploded top perspective view of a molded centrifugal blood processing container, which can be used in association with the device shown in FIG. **1**;

FIG. **22** is a bottom perspective view of the molded processing container shown in FIG. **21**;

FIG. **23** is a top view of the molded processing container shown in FIG. **21**;

FIG. **24** is a side section view of the molded processing container shown in FIG. **21**, showing an umbilicus to be connected to the container;

FIG. **24**A is a top view of the connector that connects the umbilicus to the molded processing container in the manner shown in FIG. **24**, taken generally along line **24**A-**24**A in FIG. **24**;

FIG. **25** is a side section view of the molded processing container shown in FIG. **24**, after connection of the umbilicus to the container;

FIG. **26** is an exploded, perspective view of the centrifuge station of the processing device shown in FIG. **1**, with the processing container mounted for use;

FIG. **27** is a further exploded, perspective view of the centrifuge station and processing container shown in FIG. **26**;

FIG. **28** is a side section view of the centrifuge station of the processing device shown in FIG. **26**, with the processing container mounted for use;

FIG. **29** is a top view of a molded centrifugal blood processing container as shown in FIGS. **21** to **23**, showing a flow path arrangement for separating whole blood into plasma and red blood cells;

FIGS. **30** to **33** are top views of molded centrifugal blood processing containers as shown in FIGS. **21** to **23**, showing other flow path arrangements for separating whole blood into plasma and red blood cells;

FIG. **34** is a schematic view of another blood processing circuit, which can be programmed to perform a variety of different blood processing procedures in association with the device shown in FIG. **1**;

FIG. **35** is a plane view of the front side of a cassette, which contains the programmable blood processing circuit shown in FIG. **34**;

FIG. **36** is a plane view of the back side of the cassette shown in FIG. **35**;

FIGS. **37**A to **37**E are schematic views of the blood processing circuit shown in FIG. **34**, showing the programming of the cassette to carry out different fluid flow tasks in connection with processing whole blood into plasma and red blood cells;

FIGS. **38**A and **38**B are schematic views of the blood processing circuit shown in FIG. **34**, showing the programming of the cassette to carry out fluid flow tasks in connection with on-line transfer of an additive solution into red blood cells separated from whole blood;

FIGS. **39**A and **39**B are schematic views of the blood processing circuit shown in FIG. **34**, showing the programming of the cassette to carry out fluid flow tasks in connection with on-line transfer of red blood cells separated from whole blood through a filter to remove leukocytes;

FIG. **40** is a representative embodiment of a weigh scale suited for use in association with the device shown in FIG. **1**;

FIG. **41** is a representative embodiment of another weigh scale suited for use in association with the device shown in FIG. **1**;

FIG. **42** is a schematic view of a flow rate sensing and control system for a pneumatic pump station employing an electrode to create an electrical field inside the pump station;

FIG. **43** is a schematic view of a pneumatic manifold assembly, which is part of the pump and valve station shown

in FIG. **6**, and which supplies positive and negative pneumatic pressures to convey fluid through the cassette shown in FIGS. **35** and **36**;

FIG. **44** is a top plan view of another embodiment of a blood processing chamber suitable for use with the blood processing systems and methods of the present disclosure;

FIG. **45** is front perspective view of the blood processing chamber of FIG. **44**, with a portion thereof cut away for illustrative purposes;

FIG. **46** is a top plan view of the blood processing chamber of FIG. **44**, illustrating the relative positions of separated blood components during an exemplary blood component collection procedure;

FIG. **47** is a plane view of a disposable set, which can be mounted on the device shown in FIG. **1**;

FIG. **48** is a plane view of another disposable set, which can be mounted on the device shown in FIG. **1**;

FIG. **49** is a plane view of the front side of a cassette having fourteen ports;

FIG. **50** is a plane view of the rear side of the cassette of FIG. **49**;

FIG. **51** is a schematic view of a blood processing circuit defined by the cassette of FIGS. **49** and **50**, which can be programmed to perform a variety of different blood processing procedures in association with the device shown in FIG. **1**;

FIGS. **52**A and **52**B are schematic views of the blood processing circuit of FIG. **51**, showing the programming of the cassette to carry out different fluid flow tasks in connection with drawing whole blood from a blood source;

FIG. **53** is a schematic view of the blood processing circuit of FIG. **51**, showing the programming of the cassette to carry out different fluid flow tasks in connection with separating whole blood into constituent layers;

FIGS. **54**A-**54**C are schematic views of an interleaving process for returning excess red blood cells and plasma to the blood source;

FIGS. **55**A and **55**B are schematic views of the blood processing circuit of FIG. **51**, showing the programming of the cassette to carry out different fluid flow tasks in connection with establishing a target hematocrit in the blood processing chamber;

FIGS. **56**A and **56**B are schematic views of the blood processing circuit of FIG. **51**, showing the programming of the cassette to carry out different fluid flow tasks in connection with recombining the previously separated blood components;

FIG. **57** is a schematic view of the blood processing circuit of FIG. **51**, showing the programming of the cassette to carry out different fluid flow tasks in connection with priming the tubing leading to a platelet storage solution container;

FIGS. **58**A and **58**B are schematic views of the blood processing circuit of FIG. **51**, showing the programming of the cassette to carry out different fluid flow tasks in connection with re-separating the previously recombined blood components;

FIG. **59**A is a graphical representation of the recirculation rate (in ml/min) versus the platelet concentration in a sample collected radially inward of the red blood cell and plasma interface which has been collected after a predetermined period of recirculation;

FIG. **59**B is a graphical representation of the recirculation rate (in ml/min) versus the white blood cell count in a sample collected radially inward of the red blood cell and plasma interface which has been collected after a predetermined period of recirculation;

FIG. **60**A is a schematic view of the blood processing circuit of FIG. **51**, showing the programming of the cassette to carry out different fluid flow tasks in connection with harvesting platelets using platelet poor plasma;

FIG. **60**B is a schematic view of the blood processing circuit of FIG. **51**, showing the programming of the cassette to carry out different fluid flow tasks in connection with harvesting platelets using a (non-plasma) platelet storage solution;

FIG. **61**A is a graphical representation of white blood cell contamination of a collected platelet product during a platelet harvesting stage;

FIGS. **61**B-**61**D are graphical representations of processing chamber spin speed profiles adapted to minimize the white blood cell contamination illustrated in FIG. **61**A;

FIG. **62** is a schematic view of the blood processing circuit of FIG. **51**, showing the programming of the cassette to carry out different fluid flow tasks in connection with harvesting red blood cells;

FIGS. **63**A-**63**D are schematic views of an automated burping procedure for removing excess air from a flexible bag containing an amount of a collected blood component;

FIGS. **64**A-**64**C are schematic views of the blood processing circuit of FIG. **51**, showing the programming of the cassette to carry out different fluid flow tasks in connection with mixing packed red cells and an additive solution;

FIG. **65** is a plane view of a disposable set, which can be mounted on the device shown in FIG. **1**;

FIG. **66** is a plane view of another disposable set, which can be mounted on the device shown in FIG. **1**;

FIGS. **67**A-**67**E are schematic views of the blood processing circuit of FIG. **51**, showing the programming of the cassette to carry out different fluid flow tasks in connection with collecting a separated blood component and flushing excess separated blood components from a processing system to a blood source;

FIG. **68** is a schematic view of the blood processing circuit of FIG. **51**, showing the programming of the cassette to carry out different fluid flow tasks in connection with flushing blood components from a processing chamber; and

FIGS. **69**A-**69**C are schematic views of the blood processing circuit of FIG. **51**, showing the programming of the cassette to carry out different fluid flow tasks in connection with returning blood components from a processing chamber to a blood source.

DESCRIPTION OF THE ILLUSTRATED EMBODIMENTS

The embodiments disclosed herein are for the purpose of providing the required description of the present subject matter. These embodiments are only exemplary, and may be embodied in various forms. Therefore, specific details disclosed herein are not to be interpreted as limiting the subject matter as defined in the accompanying claims.

FIG. **1** shows a fluid processing system **10** that embodies various aspects of the present subject matter. The system **10** can be used for processing various fluids. The system **10** is particularly well suited for processing whole blood and other suspensions of biological cellular materials. Accordingly, the illustrated embodiment shows the system **10** used for this purpose.

I. System Overview

The system **10** includes three principal components. These are (i) a liquid and blood flow set **12**; (ii) a blood processing device **14** that interacts with the flow set **12** to cause separation and collection of one or more blood components; and (iii)

a controller **16** that governs the interaction to perform a blood processing and collection procedure selected by the operator.

A. The Processing Device and Controller

The blood processing device **14** and controller **16** are intended to be durable items capable of long term use. In the illustrated embodiment, the blood processing device **14** and controller **16** are mounted inside a portable housing or case **36**. The case **36** presents a compact footprint, suited for set up and operation upon a table top or other relatively small surface. The case **36** is also intended to be transported easily to a collection site.

The case **36** includes a base **38** and a hinged lid **40**, which opens (as FIG. **1** shows) and closes (as FIG. **4** shows). The lid **40** includes a latch **42**, for releasably locking the lid **40** closed. The lid **40** also includes a handle **44**, which the operator can grasp for transporting the case **36** when the lid **40** is closed. In use, the base **38** is intended to rest on a generally horizontal support surface.

The case **36** can be formed into a desired configuration, e.g., by molding. In one embodiment, the case **36** is made from a lightweight, yet durable, plastic material.

B. The Flow Set

The flow set **12** is intended to be a sterile, single use, disposable item. As FIG. **2** shows, before beginning a given blood processing and collection procedure, the operator loads various components of the flow set **12** in the case **36** in association with the device **14**. The controller **16** implements the procedure based upon preset protocols, taking into account other input from the operator. Upon completing the procedure, the operator removes the flow set **12** from association with the device **14**. The portions of the set **12** holding the collected blood component or components are removed from the case **36** and retained for storage, transfusion, or further processing. The remainder of the set **12** is removed from the case **36** and discarded.

The flow set **12** shown in FIG. **1** includes a blood processing chamber **18** designed for use in association with a centrifuge. Accordingly, as FIG. **2** shows, the processing device **14** includes a centrifuge station **20**, which receives the processing chamber **18** for use. As FIGS. **2** and **3** show, the centrifuge station **20** comprises a compartment formed in the base **38**. The centrifuge station **20** includes a door **22**, which opens and closes the compartment. The door **22** opens to allow loading of the processing chamber **18**. The door **22** closes to enclose the processing chamber **18** during operation.

The centrifuge station **20** rotates the processing chamber **18**. When rotated, the processing chamber **18** centrifugally separates whole blood received from a donor into component parts, e.g., red blood cells, plasma, and buffy coat comprising platelets and leukocytes.

It should also be appreciated that the system **10** need not separate blood centrifugally. The system **10** can accommodate other types of blood separation devices, e.g., a membrane blood separation device.

II. The Programmable Blood Processing Circuit

The set **12** defines a programmable blood processing circuit **46**. Various configurations are possible. FIG. **5** schematically shows one representative configuration. FIG. **34** schematically shows another representative configuration, which will be described later.

Referring to FIG. **5**, the circuit **46** can be programmed to perform a variety of different blood processing procedures in which, e.g., red blood cells are collected, or plasma is collected, or both plasma and red blood cells are collected, or the buffy coat is collected.

The circuit **46** includes several pump stations PP(N), which are interconnected by a pattern of fluid flow paths F(N) through an array of in-line valves V(N). The circuit is coupled to the remainder of the blood processing set by ports P(N).

The circuit **46** includes a programmable network of flow paths, comprising eleven universal ports P**1** to P**8** and P**11** to P**13** and three universal pump stations PP**1**, PP**2**, and PP**3**. By selective operation of the in-line valves V**1** to V**14**, V**16** to V**18**, and V**21** to **23**, any universal port P**1** to P**8** and P**11** to P**13** can be placed in flow communication with any universal pump station PP**1**, PP**2**, and PP**3**. By selective operation of the universal valves, fluid flow can be directed through any universal pump station in a forward direction or reverse direction between two valves, or an in-out direction through a single valve.

In the illustrated embodiment, the circuit also includes an isolated flow path comprising two ports P**9** and P**10** and one pump station PP**4**. The flow path is termed "isolated," because it cannot be placed into direct flow communication with any other flow path in the circuit **46** without exterior tubing. By selective operation of the in-line valves V**15**, V**19**, and V**20**, fluid flow can be directed through the pump station in a forward direction or reverse direction between two valves, or an in-out direction through a single valve.

The circuit **46** can be programmed to assign dedicated pumping functions to the various pump stations. For example, in one embodiment, the universal pump station PP**3** can serve as a general purpose, donor interface pump, regardless of the particular blood procedure performed, to either draw blood from the donor or return blood or other fluid to the donor through the port P**8**. In this arrangement, the pump station PP**4** can serve as a dedicated anticoagulant pump, to draw anticoagulant from a source through the port P**10** and to meter anticoagulant into the blood through port P**9**.

In this arrangement, the universal pump station PP**1** can serve, regardless of the particular blood processing procedure performed, as a dedicated in-process whole blood pump, to convey whole blood into the blood separator. This dedicated function frees the donor interface pump PP**3** from the added function of supplying whole blood to the blood separator. Thus, the in-process whole blood pump PP**1** can maintain a continuous supply of blood to the blood separator, while the donor interface pump PP**3** is simultaneously used to draw blood or return fluid to the donor through the single phlebotomy needle. Processing time is thereby minimized.

In this arrangement, the universal pump station PP**2** can serve, regardless of the particular blood processing procedure performed, as a plasma pump, to convey plasma from the blood separator. The ability to dedicate separate pumping functions provides a continuous flow of blood and/or fluid into and out of the separator, as well as to and from the donor.

The circuit **46** can be programmed, depending upon the objectives of the particular blood processing procedure, to retain all or some of the plasma for storage or fractionation purposes, or to return all or some of the plasma to the donor. The circuit **46** can be further programmed, depending upon the objectives of the particular blood processing procedure, to retain all or some of the red blood cells for storage, or to return all or some of the red blood cells to the donor. The circuit **46** can also be programmed, depending upon the objectives of

the particular blood processing procedure, to retain all or some of the buffy coat for storage, or to return all or some of the buffy coat to the donor.

A. The Cassette

In one embodiment, the programmable fluid circuit **46** is implemented by use of a fluid pressure actuated cassette **28** (see FIG. **6**). The cassette **28** provides a centralized, programmable, integrated platform for all the pumping and valving functions required for a given blood processing procedure. In the illustrated embodiment, the fluid pressure comprises positive and negative pneumatic pressure. Other types of fluid pressure can be used.

As FIG. **6** shows, the cassette **28** interacts with a pneumatic actuated pump and valve station **30**, which is mounted in the lid **40** of the case **36** (see FIG. **1**). The cassette **28** is, in use, mounted in the pump and valve station **30**. The pump and valve station **30** applies positive and negative pneumatic pressure upon the cassette **28** to direct liquid flow through the circuit. Further details will be provided later.

The cassette **28** can take various forms. As illustrated (see FIG. **6**), the cassette **28** comprises an injection molded body **188** having a front side **190** and a back side **192**. For the purposes of description, the front side **190** is the side of the cassette **28** that, when the cassette **28** is mounted in the pump and valve station **30**, faces away from the operator. Flexible diaphragms **194** and **196** overlay both the front side **190** and the back side **192** of the cassette **28**, respectively.

The cassette body **188** is advantageously made of a rigid medical grade plastic material. The diaphragms **194** and **196** are made of a flexible material, for example, sheets of medical grade plastic. The diaphragms **194** and **196** are sealed about their peripheries to the peripheral edges of the front and back sides of the cassette body **188**. Interior regions of the diaphragms **194** and **196** can also be sealed to interior regions of the cassette body **188**.

The cassette body **188** has an array of interior cavities formed on both the front and back sides **190** and **192** (see FIGS. **7** and **9**). The interior cavities define the valve stations and flow paths shown schematically in FIG. **5**. An additional interior cavity is provided in the back side of the cassette **28** to form a station that holds a filter material **200**. In the illustrated embodiment, the filter material **200** comprises an overmolded mesh filter construction. The filter material **200** is intended, during use, to remove clots and cellular aggregations that can form during blood processing.

The pump stations PP**1** to PP**4** are formed as wells that are open on the front side **190** of the cassette body **188**. Upstanding edges peripherally surround the open wells of the pump stations. The pump wells are closed on the back side **192** of the cassette body **188**, except for a spaced pair of through holes or ports **202** and **204** for each pump station. The ports **202** and **204** extend through to the back side **192** of the cassette body **188**. As will become apparent, either port **202** or **204** can serve its associated pump station as an inlet or an outlet, or both inlet and outlet.

The in-line valves V**1** to V**23** are likewise formed as wells that are open on the front side **190** of the cassette. FIG. **8** shows a typical valve V(N). Upstanding edges peripherally surround the open wells of the valves on the front side **190** of the cassette body **188**. The valves are closed on the back side **192** of the cassette **28**, except that each valve includes a pair of through holes or ports **206** and **208**. One port **206** communicates with a selected liquid path on the back side **192** of the cassette body **188**. The other port **208** communicates with another selected liquid path on the back side **192** of the cassette body **188**.

In each valve, a valve seat **210** extends about one of the ports **208**. The valve seat **210** is recessed below the surface of the recessed valve well, such that the port **208** is essentially flush with the surrounding surface of the recessed valve well, and the valve seat **210** extends below the surface of the valve well.

The flexible diaphragm **194** overlying the front side **190** of the cassette **28** rests against the upstanding peripheral edges surrounding the pump stations and valves. With the application of positive force uniformly against this side of the cassette body **188**, the flexible diaphragm **194** seats against the upstanding edges. The positive force forms peripheral seals about the pump stations and valves. This, in turn, isolates the pumps and valves from each other and the rest of the system. The pump and valve station **30** applies positive force to the front side **190** of the cassette body **188** for this purpose.

Further localized application of positive and negative fluid pressures upon the regions of the diaphragm **194** overlying these peripherally sealed areas serve to flex the diaphragm regions in these peripherally sealed areas. These localized applications of positive and negative fluid pressures on these diaphragm regions overlying the pump stations serve to expel liquid out of the pump stations (with application of positive pressure) and draw liquid into the pump stations (with application of negative pressure).

In the illustrated embodiment, the bottom of each pump station PP**1** to PP**4** includes a recessed race **316** (see FIG. **7**). The race **316** extends between the ports **202** and **204**, and also includes a dogleg extending at an angle from the top port **202**. The race **316** provides better liquid flow continuity between the ports **202** and **204**, particularly when the diaphragm region is forced by positive pressure against the bottom of the pump station. The race **316** also prevents the diaphragm region from trapping air within the pump station. Air within the pump station is forced into the race **316**, where it can be readily venting through the top port **202** out of the pump station, even if the diaphragm region is bottomed out in the station.

Likewise, localized applications of positive and negative fluid pressure on the diaphragm regions overlying the valves will serve to seat (with application of positive pressure) and unseat (with application of negative pressure) these diaphragm regions against the valve seats, thereby closing and opening the associated valve port. The flexible diaphragm is responsive to an applied negative pressure for flexure out of the valve seat **210** to open the respective port. The flexible diaphragm is responsive to an applied positive pressure for flexure into the valve seat **210** to close and seal the respective port. When so flexed, the flexible diaphragm forms within the recessed valve seat **210** a peripheral seal about the valve port **208**.

In operation, the pump and valve station **30** applies localized positive and negative fluid pressures to these regions of the front diaphragm **194** for opening and closing the valve ports.

The liquid paths F**1** to F**35** are formed as elongated channels that are open on the back side **192** of the cassette body **188**, except for the liquid paths F**15**, F**23**, and F**24** are formed as elongated channels that are open on the front side **190** of the cassette body **188**. The liquid paths are shaded in FIG. **9** to facilitate their viewing. Upstanding edges peripherally surround the open channels on the front and back sides **190** and **192** of the cassette body **188**.

The liquid paths F**1** to F**35** (except for liquid paths F**15**, F**23**, and F**24**) are closed on the front side **190** of the cassette body **188**, except where the channels cross over valve station ports or pump station ports. Likewise, the liquid paths F**15**, F**23**, and F**24** are closed on the back side **192** of the cassette body **188**, except where the channels cross over in-line ports communicating with certain channels on the back side **192** of the cassette **28**.

The flexible diaphragms **194** and **196** overlying the front and back sides **190** and **192** of the cassette body **188** rest against the upstanding peripheral edges surrounding the liquid paths F**1** to F**35**. With the application of positive force uniformly against the front and back sides **190** and **192** of the cassette body **188**, the flexible diaphragms **194** and **196** seat against the upstanding edges. This forms peripheral seals along the liquid paths F**1** to F**35**. In operation, the pump and valve station **30** applies positive force to the diaphragms **194** and **196** for this purpose.

The pre-molded ports P**1** to P**13** extend out along two side edges of the cassette body **188**. The cassette **28** is vertically mounted for use in the pump and valve station **30** (see FIG. **2**). In this orientation, the ports P**8** to P**13** face downward, and the ports P**1** to P**7** are vertically stacked one above the other and face inward.

As FIG. **2** shows, the ports P**8** to P**13**, by facing downward, are oriented with container support trays **212** formed in the base **38**, as will be described later. The ports P**1** to P**7**, facing inward, are oriented with the centrifuge station **20** and a container weigh station **214**, as will also be described in greater detail later. The orientation of the ports P**5** to P**7** (which serve the processing chamber **18**) below the ports P**1** to P**4** keeps air from entering the processing chamber **18**.

This ordered orientation of the ports provides a centralized, compact unit aligned with the operative regions of the case **36**.

B. The Universal Set

FIG. **10** schematically shows a universal set **264**, which, by selective programming of the blood processing circuit **46** implemented by the cassette **28**, is capable of performing several different blood processing procedures.

The universal set **264** includes a donor tube **266**, which is attached (through y-connectors **272** and **273**) to tubing **300** having an attached phlebotomy needle **268**. The donor tube **266** is coupled to the port P**8** of the cassette **28**.

A container **275** for collecting an in-line sample of blood drawn through the tube **300** is also attached through the y-connector **273**.

An anticoagulant tube **270** is coupled to the phlebotomy needle **268** via the y-connector **272**. The anticoagulant tube **270** is coupled to cassette port P**9**. A container **276** holding anticoagulant is coupled via a tube **274** to the cassette port P**10**. The anticoagulant tube **270** carries an external, manually operated in-line clamp **282** of conventional construction.

A container **280** holding a red blood cell additive solution is coupled via a tube **278** to the cassette port P**3**. The tube **278** also carries an external, manually operated in-line clamp **282**.

A container **288** holding saline is coupled via a tube **284** to the cassette port P**12**.

FIG. **10** shows the fluid holding containers **276**, **280**, and **288** as being integrally attached during manufacture of the set **264**. Alternatively, all or some of the containers **276**, **280**, and **288** can be supplied separate from the set **264**. The containers **276**, **280**, and **288** may be coupled by conventional spike connectors, or the set **264** may be configured to accommodate the attachment of the separate container or containers at the time of use through a suitable sterile connection, to thereby maintain a sterile, closed blood processing environment. Alternatively, the tubes **274**, **278**, and **284** can carry an in-line sterilizing filter and a conventional spike connector for insertion into a container port at time of use, to thereby maintain a sterile, closed blood processing environment.

The set **264** further includes tubes **290**, **292**, **294**, which extend to an umbilicus **296**. When installed in the processing station, the umbilicus **296** links the rotating processing chamber **18** with the cassette **28** without need for rotating seals. Further details of this construction will be provided later.

The tubes **290**, **292**, and **294** are coupled, respectively, to the cassette ports P**5**, P**6**, and P**7**. The tube **290** conveys whole blood into the processing chamber **18**. The tube **292** conveys plasma from the processing chamber **18**. The tube **294** conveys red blood cells from the processing chamber **18**.

A plasma collection container **304** is coupled by a tube **302** to the cassette port P**3**. The collection container **304** is intended, in use, to serve as a reservoir for plasma during processing.

A red blood cell collection container **308** is coupled by a tube **306** to the cassette port P**2**. The collection container **308** is intended, in use, to receive a first unit of red blood cells for storage.

A whole blood reservoir **312** is coupled by a tube **310** to the cassette port P**1**. The collection container **312** is intended, in use, to serve as a reservoir for whole blood during processing. It can also serve to receive a second unit of red blood cells for storage.

As shown in FIG. **10**, no tubing is coupled to the utility cassette port P**13** and buffy port P**4**.

C. The Pump and Valve Station

The pump and valve station **30** includes a cassette holder **216**. The door **32** is hinged to move with respect to the cassette holder **216** between the opened position, exposing the cassette holder **216** (shown in FIG. **6**) and the closed position, covering the cassette holder **216** (shown in FIG. **3**). The door **32** also includes an over center latch **218** with a latch handle **220** (shown in FIG. **11**). When the door **32** is closed, the latch **218** swings into engagement with the latch pin **222**.

As FIG. **11** shows, the inside face of the door **32** carries an elastomeric gasket **224**. The gasket **224** contacts the back side **192** of the cassette **28** when the door **32** is closed. An inflatable bladder **314** underlies the gasket **224**.

With the door **32** opened (see FIG. **2**), the operator can place the cassette **28** into the cassette holder **216**. Closing the door **32** and securing the latch **218** brings the gasket **224** into facing contact with the diaphragm **196** on the back side **192** of the cassette **28**. Inflating the bladder **314** presses the gasket **224** into intimate, sealing engagement against the diaphragm **196**. The cassette **28** is thereby secured in a tight, sealing fit within the cassette holder **216**.

The inflation of the bladder **314** also fully loads the over center latch **218** against the latch pin **222** with a force that cannot be overcome by normal manual force against the latch handle **220**. The door **32** is securely locked and cannot be opened when the bladder **314** is inflated. In this construction, there is no need for an auxiliary lock-out device or sensor to assure against opening of the door **32** during blood processing.

The pump and valve station **30** also includes a manifold assembly **226** located in the cassette holder **216** (FIG. **12**). The manifold assembly **226** comprises a molded or machined plastic or metal body. The front side **194** of the diaphragm is

held in intimate engagement against the manifold assembly **226** when the door **32** is closed and the bladder **314** inflated.

The manifold assembly **226** is coupled to a pneumatic pressure source **234**, which supplies positive and negative air pressure. The pneumatic pressure source **234** is carried inside the lid **40** behind the manifold assembly **226**.

In the illustrated embodiment, the pressure source **234** comprises two compressors C**1** and C**2**. However, one or several dual-head compressors could be used as well. As FIG. **12** shows, one compressor C**1** supplies negative pressure through the manifold **226** to the cassette **28**. The other compressor C**2** supplies positive pressure through the manifold **226** to the cassette **28**.

As FIG. **12** shows, the manifold **226** contains four pump actuators PA**1** to PA**4** and twenty-three valve actuators VA**1** to VA**23**. The pump actuators PA**1** to PA**4** and the valve actuators VA**1** to VA**23** are mutually oriented to form a mirror image of the pump stations PP**1** to PP**4** and valve stations V**1** to V**23** on the front side **190** of the cassette **28**.

As FIG. **12** also shows, each actuator PA**1** to PA**4** and VA**1** to VA**23** includes a port **228**. The ports **228** convey positive or negative pneumatic pressures from the source in a sequence governed by the controller **16**. These positive and negative pressure pulses flex the front diaphragm **194** to operate the pump stations PP**1** to PP**4** and valve stations V**1** to V**23** in the cassette **28**. This, in turn, moves blood and processing liquid through the cassette **28**.

In the illustrated embodiment, the cassette holder **216** includes an integral elastomeric membrane **232** (see FIG. **6**) stretched across the manifold assembly **226**. The membrane **232** serves as the interface between the manifold assembly **226** and the diaphragm **194** of the cassette **28**, when fitted into the holder **216**. The membrane **232** may include one or more small through holes (not shown) in the regions overlying the pump and valve actuators PA**1** to PA**4** and V**1** to V**23**. The holes are sized to convey pneumatic fluid pressure from the manifold assembly **226** to the cassette diaphragm **194**. Still, the holes are small enough to retard the passage of liquid. The membrane **232** forms a flexible splash guard across the exposed face of the manifold assembly **226**.

The splash guard membrane **232** keeps liquid out of the pump and valve actuators PA**1** to PA**4** and VA**1** to VA**23**, should the cassette diaphragm **194** leak. The splash guard membrane **232** also serves as a filter to keep particulate matter out of the pump and valve actuators of the manifold assembly **226**. The splash guard membrane **232** can be periodically wiped clean when cassettes **28** are exchanged.

The manifold assembly **226** includes an array of solenoid actuated pneumatic valves, which are coupled in-line with the pump and valve actuators PA**1** to PA**4** and VA**1** to VA**23**. The manifold assembly **226**, under the control of the controller **16**, selectively distributes the different pressure and vacuum levels to the pump and valve actuators PA(N) and VA(N). These levels of pressure and vacuum are systematically applied to the cassette **28**, to route blood and processing liquids.

Under the control of a controller **16**, the manifold assembly **226** also distributes pressure levels to the door bladder **314** (already described), as well as to a donor pressure cuff (not shown) and to a donor line occluder **320**.

As FIG. **1** shows, the donor line occluder **320** is located in the case **36**, immediately below the pump and valve station **30**, in alignment with the ports P**8** and P**9** of the cassette **28**. The donor line **266**, coupled to the port P**8**, passes through the occluder **320**. The anticoagulant line **270**, coupled to the port P**9**, also passes through the occluder **320**. The occluder **320** is a spring loaded, normally closed pinch valve, between which the lines **266** and **270** pass. Pneumatic pressure from the manifold assembly **234** is supplied to a bladder (not shown) through a solenoid valve. The bladder, when expanded with pneumatic pressure, opens the pinch valve, to thereby open the lines **266** and **270**. In the absence of pneumatic pressure, the solenoid valve closes and the bladder vents to atmosphere. The spring loaded pinch valve of the occluder **320** closes, thereby closing the lines **266** and **270**.

The manifold assembly **226** maintains several different pressure and vacuum conditions, under the control of the controller **16**. In the illustrated embodiment, the following multiple pressure and vacuum conditions are maintained:

(i) Phard, or Hard Pressure, and Pinpr, or In-Process Pressure are the highest pressures maintained in the manifold assembly **226**. Phard is applied for closing cassette valves V**1** to V**23**. Pinpr is applied to drive the expression of liquid from the in-process pump PP**1** and the plasma pump PP**2**. A typical pressure level for Phard and Pinpr in the context of an exemplary embodiment is 500 mmHg.

(ii) Pgen, or General Pressure, is applied to drive the expression of liquid from the donor interface pump PP**3** and the anticoagulant pump PP**4**. A typical pressure level for Pgen in the context of an exemplary embodiment is 150 mmHg.

(iii) Pcuff, or Cuff Pressure, is supplied to the donor pressure cuff. A typical pressure level for Pcuff in the context of an exemplary embodiment is 80 mmHg.

(iv) Vhard, or Hard Vacuum, is the deepest vacuum applied in the manifold assembly **226**. Vhard is applied to open cassette valves V**1** to V**23**. A typical vacuum level for Vhard in the context of an exemplary embodiment is −350 mmHg.

(v) Vgen, or General Vacuum, is applied to drive the draw function of each of the four pumps PP**1** to PP**4**. A typical pressure level for Vgen in the context of an exemplary embodiment is −300 mmHg.

(vi) Pdoor, or Door Pressure, is applied to the bladder **314** to seal the cassette **28** into the holder **216**. A typical pressure level for Pdoor in the context of an exemplary embodiment is 700 mmHg.

For each pressure and vacuum level, a variation of plus or minus 20 mmHg, for example, is tolerated.

Pinpr is used to operate the in-process pump PP**1**, to pump blood into the processing chamber **18**. The magnitude of Pinpr must be sufficient to overcome the pressure within the processing chamber **18**, which may be approximately 300 mmHg.

Similarly, Pinpr is used for the plasma pump PP**2**, since it must have similar pressure capabilities in the event that plasma needs to be pumped backwards into the processing chamber **18**, e.g., during a spill condition, as will be described later.

Pinpr and Phard are operated at the highest pressure to ensure that upstream and downstream valves used in conjunction with pumping are not forced opened by the pressures applied to operate the pumps. The cascaded, interconnectable design of the fluid paths F**1** to F**35** through the cassette **28** requires Pinpr-Phard to be the highest pressure applied. By the same token, Vgen is required to be less extreme than Vhard, to ensure that pumps PP**1** to PP**4** do not overwhelm upstream and downstream cassette valves V**1** to V**23**.

Pgen is used to drive the donor interface pump PP**3** and can be maintained at a lower pressure, as can the AC pump PP**4**.

A main hard pressure line **322** and a main vacuum line **324** distribute Phard and Vhard in the manifold assembly **226**. The pressure and vacuum sources **234** run continuously to supply Phard to the hard pressure line **322** and Vhard to the hard vacuum line **324**.

A pressure sensor S**1** monitors Phard in the hard pressure line **322**. The sensor S**1** controls a solenoid SO**38**. The sole-

noid SO**38** is normally closed. The sensor S**1** opens the solenoid SO**38** to build Phard up to its maximum set value. Solenoid SO**38** is closed as long as Phard is within its specified pressure range and is opened when Phard falls below its minimum acceptable value.

Similarly, a pressure sensor S**5** in the hard vacuum line **324** monitors Vhard. The sensor S**5** controls a solenoid SO**39**. The solenoid SO**39** is normally closed. The sensor S**5** opens the solenoid SO**39** to build Vhard up to its maximum value. Solenoid SO**39** is closed as long as Vhard is within its specified pressure range and is opened when Vhard falls outside its specified range.

A general pressure line **326** branches from the hard pressure line **322**. A sensor S**2** in the general pressure line **326** monitors Pgen. The sensor S**2** controls a solenois SO**30**. The solenois SO**30** is normally closed. The sensor S**2** opens the solenois SO**30** to refresh Pgen from the hard pressure line **322**, up to the maximum value of Pgen. Solenois SO**30** is closed as long as Pgen is within its specified pressure range and is opened when Pgen falls outside its specified range.

An in-process pressure line **328** also branches from the hard pressure line **322**. A sensor S**3** in the in-process pressure line **328** monitors Pinpr. The sensor S**3** controls a solenois SO**36**. The solenois SO**36** is normally closed. The sensor S**3** opens the solenois SO**36** to refresh Pinpr from the hard pressure line **322**, up to the maximum value of Pinpr. Solenois SO**36** is closed as long as Pinpr is within its specified pressure range and is opened when Pinpr falls outside its specified range.

A general vacuum line **330** branches from the hard vacuum line **324**. A sensor S**6** monitors Vgen in the general vacuum line **330**. The sensor S**6** controls a solenois SO**31**. The solenois SO**31** is normally closed. The sensor S**6** opens the solenois SO**31** to refresh Vgen from the hard vacuum line **324**, up to the maximum value of Vgen. The solenois SO**31** is closed as long as Vgen is within its specified range and is opened when Vgen falls outside its specified range.

In-line reservoirs R**1** to R**5** are provided in the hard pressure line **322**, the in-process pressure line **328**, the general pressure line **326**, the hard vacuum line **324**, and the general vacuum line **330**. The reservoirs R**1** to R**5** assure that the constant pressure and vacuum adjustments as above described are smooth and predictable.

The solenoids SO**33** and SO**34** provide a vent for the pressures and vacuums, respectively, upon procedure completion. Since pumping and valving will continually consume pressure and vacuum, the solenoids SO**33** and SO**34** are normally closed. The solenoids SO**33** and SO**34** are opened to vent the manifold assembly upon the completion of a blood processing procedure.

The solenoids SO**28**, SO**29**, SO**35**, SO**37** and SO**32** provide the capability to isolate the reservoirs R**1** to R**5** from the air lines that supply vacuum and pressure to the manifold assembly **226**. This provides for much quicker pressure/vacuum decay feedback, so that testing of cassette/manifold assembly seal integrity can be accomplished. These solenoids SO**28**, SO**29**, SO**35**, SO**37**, and SO**32** are normally opened, so that pressure cannot be built in the assembly **226** without a command to close the solenoids SO**28**, SO**29**, SO**35**, SO**37**, and SO**32**, and, further, so that the system pressures and vacuums can vent in an error mode or with loss of power.

The solenoids SO**1** to SO**23** provide Phard or Vhard to drive the valve actuators VA**1** to V**23**. In the unpowered state, these solenoids are normally opened to keep all cassette valves V**1** to V**23** closed.

The solenoids SO**24** and SO**25** provide Pinpr and Vgen to drive the in-process and plasma pumps PP**1** and PP**2**. In the unpowered state, these solenoids are opened to keep both pumps PP**1** and PP**2** closed.

The solenoids SO**26** and SO**27** provide Pgen and Vgen to drive the donor interface and AC pumps PP**3** and PP**4**. In the unpowered state, these solenoids are opened to keep both pumps PP**3** and PP**4** closed.

The solenois SO**43** provides isolation of the door bladder **314** from the hard pressure line **322** during the procedure. The solenois SO**43** is normally opened and is closed when Pdoor is reached. A sensor S**7** monitors Pdoor and signals when the bladder pressure falls below Pdoor. The solenois SO**43** is opened in the unpowered state to ensure bladder **314** venting, as the cassette **28** cannot be removed from the holder while the door bladder **314** is pressurized.

The solenois SO**42** provides Phard to open the safety occluder valve **320**. Any error modes that might endanger the donor will relax (vent) the solenoid SO**42** to close the occluder **320** and isolate the donor. Similarly, any loss of power will relax the solenois SO**42** and isolate the donor.

The sensor S**4** monitors Pcuff and communicates with solenois SO**41** (for increases in pressure) and solenois SO**40** (for venting) to maintain the donor cuff within its specified ranges during the procedure. The solenois SO**40** is normally open so that the cuff line will vent in the event of system error or loss of power. The solenois SO**41** is normally closed to isolate the donor from any Phard in the event of power loss or system error.

FIG. **12** shows a sensor S**8** in the pneumatic line serving the donor interface pump actuator PA**3**. The sensor S**8** is a bidirectional mass air flow sensor, which can monitor air flow to the donor interface pump actuator PA**3** to detect occlusions in the donor line. Alternatively, as will be described in greater detail later, electrical field variations can be sensed by an electrode carried within the donor interface pump station PP**3**, or any or all other pump stations PP**1**, PP**2**, or PP**4**, to detect occlusions, as well as to permit calculation of flow rates and the detection of air.

Various alternative embodiments are possible. For example, the pressure and vacuum available to the four pumping stations could be modified to include more or less distinct levels or different groupings of "shared" pressure and vacuum levels. As another example, Vhard could be removed from access to the solenoids SO**2**, SO**5**, SO**8**, SO**18**, SO**19**, SO**21**, SO**22** since the restoring springs will return the cassette valves to a closed position upon removal of a vacuum. Furthermore, the vents shown as grouped together could be isolated or joined in numerous combinations.

It should also be appreciated that any of the solenoids used in "normally open" mode could be re-routed pneumatically to be realized as "normally closed". Similarly, any of the "normally closed" solenoids could be realized as "normally open."

As another example of an alternative embodiment, the hard pressure reservoir R**1** could be removed if Pdoor and Phard were set to identical magnitudes. In this arrangement, the door bladder **314** could serve as the hard pressure reservoir. The pressure sensor S**7** and the solenois SO**43** would also be removed in this arrangement.

III. Other Process Control Components of the System

As FIG. **13** best shows, the case **36** contains other components compactly arranged to aid blood processing. In addition to the centrifuge station **20** and pump and valve station **30**,

already described, the case **36** includes a weigh station **238**, an operator interface station **240**, and one or more trays **212** or hangers **248** for containers. The arrangement of these components in the case **36** can vary. In the illustrated embodiment, the weigh station **238**, the controller **16**, and the user interface station **240**, like the pump and valve station **30**, are located in the lid **40** of the case **36**. The holding trays **212** are located in the base **38** of the case **36**, adjacent the centrifuge station **20**.

A. Container Support Components

The weigh station **238** comprises a series of container hangers/weigh sensors **246** arranged along the top of the lid **40**. In use (see FIG. **2**), containers **304**, **308**, **312** are suspended on the hangers/weigh sensors **246**.

The containers receive blood components separated during processing, as will be described in greater detail later. The weigh sensors **246** provide output reflecting weight changes over time. This output is conveyed to the controller **16**. The controller **16** processes the incremental weight changes to derive fluid processing volumes and flow rates. The controller generates signals to control processing events based, in part, upon the derived processing volumes. Further details of the operation of the controller to control processing events will be provided later.

The holding trays **212** comprise molded recesses in the base **38**. The trays **212** accommodate the containers **276** and **280** (see FIG. **2**). In the illustrated embodiment, an additional swing-out hanger **248** is also provided on the side of the lid **40**. The hanger **248** (see FIG. **2**) supports the container **288** during processing. In the illustrated embodiment, the trays **212** and hanger **248** also include weigh sensors **246**.

The weigh sensors **246** can be variously constructed. In the embodiment shown in FIG. **40**, the scale includes a force sensor **404** incorporated into a housing **400**, to which a hanger **402** is attached. The top surface **420** of hanger **402** engages a spring **406** on the sensor **404**. Another spring **418** is compressed as a load, carried by the hanger **402**, is applied. The spring **418** resists load movement of the hanger **402**, until the load exceeds a predetermined weight (e.g., 2 kg.). At that time, the hanger **402** bottoms out on mechanical stops **408** in the housing **400**, thereby providing over load protection.

In the embodiment shown in FIG. **41**, a supported beam **410** transfers force applied by a hanger **416** to a force sensor **412** through a spring **414**. This design virtually eliminates friction from the weight sensing system. The magnitude of the load carried by the beam is linear in behavior, and the weight sensing system can be readily calibrated to ascertain an actual load applied to the hanger **416**.

B. The Controller and Operator Interface Station

The controller **16** carries out process control and monitoring functions for the system **10**. As FIG. **14** shows schematically, the controller **16** comprises a main processing unit (MPU) **250**, which can comprise, e.g., a Pentium™ type microprocessor made by Intel Corporation, although other types of conventional microprocessors can be used. The controller **16** is mounted inside the lid **40** of the case **36** (as FIG. **13** shows).

In one embodiment, the MPU **250** employs conventional real time multi-tasking to allocate MPU cycles to processing tasks. A periodic timer interrupt (for example, every 5 milliseconds) preempts the executing task and schedules another that is in a ready state for execution. If a reschedule is requested, the highest priority task in the ready state is scheduled. Otherwise, the next task on the list in the ready state is scheduled.

As FIG. **14** shows, the MPU **250** includes an application control manager **252**. The application control manager **252** administers the activation of a library of at least one control application **254**. Each control application **254** prescribes procedures for carrying out given functional tasks using the centrifuge station **20** and the pump and valve station **30** in a predetermined way. In the illustrated embodiment, the applications **254** reside as process software in EPROM's in the MPU **250**.

The number of applications **254** can vary. In the illustrated embodiment, the applications **254** include at least one clinical procedure application. The procedure application contains the steps to carry out one prescribed clinical processing procedure. For the sake of example, in the illustrated embodiment, the application **254** includes three procedure applications: (1) a double unit red blood cell collection procedure; (2) a plasma collection procedure; and (3) a plasma/red blood cell collection procedure. The details of these procedures will be described later. Of course, additional procedure applications can be included.

As FIG. **14** shows, several slave processing units communicate with the application control manager **252**. While the number of slave processing units can vary, the illustrated embodiment shows five units **256**(**1**) to **256**(**5**). The slave processing units **256**(**1**) to **256**(**5**), in turn, communicate with low level peripheral controllers **258** for controlling the pneumatic pressures within the manifold assembly **226**, the weigh sensors **246**, the pump and valve actuators PA**1** to PA**4** and VA**1** to VA**23** in the pump and valve station **30**, the motor for the centrifuge station **20**, the interface sensing station **332**, and other functional hardware of the system.

The MPU **250** contains in EPROM's the commands for the peripheral controllers **258**, which are downloaded to the appropriate slave processing unit **256**(**1**) to **256**(**5**) at start-up. The application control manager **252** also downloads to the appropriate slave processing unit **256**(**1**) to **256**(**5**) the operating parameters prescribed by the activated application **254**.

With this downloaded information, the slave processing units **256**(**1**) to **256**(**5**) proceed to generate device commands for the peripheral controllers **258**, causing the hardware to operate in a specified way to carry out the procedure. The peripheral controllers **258** return current hardware status information to the appropriate slave processing unit **256**(**1**) to **256**(**5**), which, in turn, generates the commands necessary to maintain the operating parameters ordered by the application control manager **252**.

In the illustrated embodiment, one slave processing unit **256**(**2**) performs the function of an environmental manager. The unit **256**(**2**) receives redundant current hardware status information and reports to the MPU **250** should a slave unit malfunction and fail to maintain the desired operating conditions.

As FIG. **14** shows, the MPU **250** also includes an interactive user interface **260**, which allows the operator to view and comprehend information regarding the operation of the system **10**. The interface **260** is coupled to the interface station **240**. The interface **260** allows the operator to use the interface station **240** to select applications **254** residing in the application control manager **252**, as well as to change certain functions and performance criteria of the system **10**.

As FIG. **13** shows, the interface station **240** includes an interface screen **262** carried in the lid **40**. The interface screen **262** displays information for viewing by the operator in alpha-numeric format and as graphical images. In the illus-

trated embodiment, the interface screen **262** also serves as an input device. It receives input from the operator by conventional touch activation.

C. On-Line Monitoring of Pump Flows

1. Gravimetric Monitoring

Using the weigh scales **246**, either upstream or downstream of the pumps, the controller **16** can continuously determine the actual volume of fluid that is moved per pump stroke and correct for any deviations from commanded flow. The controller **16** can also diagnose exceptional situations, such as leaks and obstructions in the fluid path. This measure of monitoring and control is desirable in an automated apheresis application, where anticoagulant has to be accurately metered with the whole blood as it is drawn from the donor, and where product quality (e.g., hematocrit, plasma purity) is influenced by the accuracy of the pump flow rates.

The pumps PP**1** to PP**4** in the cassette **28** each provides a relatively-constant nominal stroke volume, or SV. The flow rate for a given pump can therefore be expressed as follows:

$$Q = \frac{SV}{(T_{Pump} + T_{Fill} + T_{Idle})} \tag{1}$$

where:

Q is the flow rate of the pump.

T_{Pump} is the time the fluid is moved out of the pump station.

T_{Fill} is the time the pump is filled with fluid.

T_{Idle} is the time when the pump is idle, that is, when no fluid movement occurs.

The SV can be affected by the interaction of the pump with attached downstream and upstream fluid circuits. This is analogous, in electrical circuit theory, to the interaction of a non-ideal current source with the input impedance of the load it sees. Because of this, the actual SV can be different than the nominal SV.

The actual fluid flow in volume per unit of time Q_{Actual} can therefore be expressed as follows:

$$Q_{Actual} = k \times \frac{SV_{Ideal}}{T_{Pump} + T_{Fill} + T_{Idle}} \tag{2}$$

where:

Q_{Actual} is the actual fluid flow in volume per unit of time.

SV_{Ideal} is the theoretical stroke volume, based upon the geometry of the pump station. k is a correction factor that accounts for the interactions between the pump and the upstream and downstream pressures.

The actual flow rate can be ascertained gravimetrically, using the upstream or downstream weigh scales **246**, based upon the following relationship:

$$Q_{Actual} = \frac{\Delta Wt}{\rho \times \Delta T} \tag{3}$$

where:

ΔWt is the change in weight of fluid as detected by the upstream or downstream weigh scale **246** during the time period ΔT.

ρ is the density of fluid.

ΔT is the time period where the change in weight ΔWt is detected in the weigh scale **246**.

The following expression is derived by combining Equations (2) and (3):

$$k = (T_{Pump} + T_{Fill} + T_{Idle}) \times \frac{\Delta Wt}{(SV_{Ideal} \times \rho \times \Delta T)} \tag{4}$$

The controller **16** computes k according to Equation (4) and then adjusts T_{Idle} so that the desired flow rate is achieved, as follows:

$$T_{Idle} = \left(k \times \frac{SV_{Ideal}}{Q_{Desired}}\right) - T_{Pump} - T_{Fill} \tag{5}$$

The controller **16** updates the values for k and T_{Idle} frequently to adjust the flow rates.

Alternatively, the controller **16** can change T_{Pump} and/or T_{Fill} and/or T_{Idle} to adjust the flow rates.

In this arrangement, one or more of the time interval components T_{Pump}, or T_{Fill}, or T_{Idle} is adjusted to a new magnitude to achieve $Q_{Desired}$, according to the following relationship:

$$T_{n(Adjusted)} = k\left(\frac{SV_{Ideal}}{Q_{Desired}}\right) - T_{n(NotAdjusted)}$$

where:

$T_{n(Adjusted)}$ is the magnitude of the time interval component or components after adjustment to achieve the desired flow rate $Q_{Desired}$.

$T_{n(NotAdjusted)}$ is the magnitude of the value of the other time interval component or components of T_{Stroke} that are not adjusted. The adjusted stroke interval after adjustment to achieve the desired flow rate $Q_{Desired}$ is the sum of $T_{n(Adjusted)}$ and $T_{n(NotAdjusted)}$.

The controller **16** also applies the correction factor k as a diagnostics tool to determine abnormal operating conditions. For example, if k differs significantly from its nominal value, the fluid path may have either a leak or an obstruction. Similarly, if the computed value of k is of a polarity different from what was expected, then the direction of the pump may be reversed.

With the weigh scales **246**, the controller **16** can perform on-line diagnostics even if the pumps are not moving fluid. For example, if the weigh scales **246** detect changes in weight when no flow is expected, then a leaky valve or a leak in the set **264** may be present.

In computing k and T_{Idle} and/or T_{Pump} and/or T_{Fill}, the controller **16** may rely upon multiple measurements of ΔWt and/or ΔT. A variety of averaging or recursive techniques (e.g., recursive least mean squares, Kalman filtering, etc.) may be used to decrease the error associated with the estimation schemes.

The above described monitoring technique is applicable for use for other constant stroke volume pumps, e.g. peristaltic pumps, etc.

2. Electrical Monitoring

In an alternative arrangement (see FIG. **42**), the controller **16** includes a metal electrode **422** located in the chamber of

each pump station PP**1** to PP**4** on the cassette **28**. The electrodes **422** are coupled to a current source **424**. The passage of current through each electrode **422** creates an electrical field within the respective pump station PP**1** to PP**4**.

Cyclic deflection of the diaphragm **194** to draw fluid into and expel fluid from the pump station PP**1** to PP**4** changes the electrical field, resulting in a change in total capacitance of the circuit through the electrode **422**. Capacitance increases as fluid is drawn into the pump station PP**1** to PP**4**, and capacitance decreases as fluid is expelled from the pump station PP**1** to PP**4**.

The controller **16** includes a capacitive sensor **426** (e.g., a QProx™ E2S sensor from Quantum Research Group Ltd. of Hamble, England) coupled to each electrode **422**. The capacitive sensor **426** registers changes in capacitance for the electrode **422** in each pump station PP**1** to PP**4**. The capacitance signal for a given electrode **422** has a high signal magnitude when the pump station is filled with liquid (diaphragm position **194***a*), has a low signal magnitude signal when the pump station is empty of fluid (diaphragm position **194***b*), and has a range of intermediate signal magnitudes when the diaphragm occupies positions between positions **194***a* and **194***b*.

At the outset of a blood processing procedure, the controller **16** calibrates the difference between the high and low signal magnitudes for each sensor to the maximum stroke volume SV of the respective pump station. The controller **16** then relates the difference between sensed maximum and minimum signal values during subsequent draw and expel cycles to fluid volume drawn and expelled through the pump station. The controller **16** sums the fluid volumes pumped over a sample time period to yield an actual flow rate.

The controller **16** compares the actual flow rate to a desired flow rate. If a deviance exists, the controller **16** varies pneumatic pressure pulses delivered to the actuator PA**1** to PA**4**, to adjust T_{Idle} and/or T_{Pump} and/or T_{Fill} to minimize the deviance.

The controller **16** also operates to detect abnormal operating conditions based upon the variations in the electric field and to generate an alarm output. In the illustrated embodiment, the controller **16** monitors for an increase in the magnitude of the low signal magnitude over time. The increase in magnitude reflects the presence of air inside a pump station.

In the illustrated embodiment, the controller **16** also generates a derivative of the signal output of the sensor **426**. Changes in the derivative, or the absence of a derivative, reflects a partial or complete occlusion of flow through the pump station PP**1** to PP**4**. The derivative itself also varies in a distinct fashion depending upon whether the occlusion occurs at the inlet or outlet of the pump station PP**1** to PP**4**.

IV. The Blood Processing Procedures

A. Double RBC Collection Procedure (No Plasma Collection)

During this procedure, whole blood from a donor is centrifugally processed to yield up to two units (approximately 500 ml) of red blood cells for collection. All plasma constituent is returned to the donor. This procedure will, in shorthand, be called the double red blood cell collection procedure.

Prior to undertaking the double red blood cell collection procedure, as well as any blood collection procedure, the controller **16** operates the manifold assembly **226** to conduct an appropriate integrity check of the cassette **28**, to determine whether there are any leaks in the cassette **28**. Once the cassette integrity check is complete and no leaks are found, the controller **16** begins the desired blood collection procedure.

The double red blood cell collection procedure includes a pre-collection cycle, a collection cycle, a post-collection cycle, and a storage preparation cycle. During the pre-collection cycle, the set **264** is primed to vent air prior to venipuncture. During the collection cycle, whole blood drawn from the donor is processed to collect two units of red blood cells, while returning plasma to the donor. During the post-collection cycle, excess plasma is returned to the donor, and the set is flushed with saline. During the storage preparation cycle, a red blood cell storage solution is added.

1. The Pre-Collection Cycle

a. Anticoagulant Prime 1

In a first phase of the pre-collection cycle (AC Prime 1), tube **300** leading to the phlebotomy needle **268** is clamped closed (see FIG. **10**). The blood processing circuit **46** is programmed (through the selective application of pressure to the valves and pump stations of the cassette) to operate the donor interface pump PP**3**, drawing anticoagulant through the anticoagulant tube **270** and up the donor tube **266** through the y-connector **272** (i.e., in through valve V**13** and out through valve V**11**). The circuit is further programmed to convey air residing in the anticoagulant tube **270**, the donor tube **266**, and the cassette into the in-process container **312**. This phase continues until an air detector **298** along the donor tube **266** detects liquid, confirming the pumping function of the donor interface pump PP**3**.

b. Anticoagulant Prime 2

In a second phase of the pre-collection cycle (AC Prime 2), the circuit is programmed to operate the anticoagulant pump PP**4** to convey anticoagulant into the in-process container **312**. Weight changes in the in-process container **312**. AC Prime 2 is terminated when the anticoagulant pump PP**4** conveys a predetermined volume of anticoagulant (e.g., 10 g) into the in-process container **312**, confirming its pumping function.

c. Saline Prime 1

In a third phase of the pre-collection cycle (Saline Prime 1), the processing chamber **18** remains stationary. The circuit is programmed to operate the in-process pump station PP**1** to draw saline from the saline container **288** through the in-process pump PP**1**. This creates a reverse flow of saline through the stationary processing chamber **18** toward the in-process container **312**. In this sequence saline is drawn through the processing chamber **18** from the saline container **288** into the in-process pump PP**1** through valve V**14**. The saline is expelled from the pump station PP**1** toward the in-process container **312** through valve V**9**. Weight changes in the saline container **288** are monitored. This phase is terminated upon registering a predetermined weight change in the saline container **288**, which indicates conveyance of a saline volume sufficient to initially fill about one half of the processing chamber **18** (e.g., about 60 g).

d. Saline Prime 2

With the processing chamber **18** about half full of priming saline, a fourth phase of the pre-collection cycle begins (Sa-

line Prime 2). The processing chamber **18** is rotated at a low rate (e.g., about 300 RPM), while the circuit continues to operate in the same fashion as in Saline Prime 1. Additional saline is drawn into the pump station PP**1** through valve V**14** and expelled out of the pump station PP**1** through valve V**9** and into the in-process container **312**. Weight changes in the in-process container **312** are monitored. This phase is terminated upon registering a predetermined weight change in the in-process container **312**, which indicates the conveyance of an additional volume of saline sufficient to substantially fill the processing chamber **18** (e.g., about 80 g).

e. Saline Prime 3

In a fifth phase of the pre-collection cycle (Saline Prime 3), the circuit is programmed to first operate the in-process pump station PP**1** to convey saline from the in-process container **312** through all outlet ports of the separation device and back into the saline container **288** through the plasma pump station PP**2**. This completes the priming of the processing chamber **18** and the in-process pump station PP**1** (pumping in through valve V**9** and out through valve V**14**), as well as primes the plasma pump station PP**2**, with the valves V**7**, V**6**, V**10**, and V**12** opened to allow passive flow of saline. During this time, the rate at which the processing chamber **18** is rotated is successively ramped between zero and 300 RPM. Weight changes in the in-process container **312** are monitored. When a predetermined initial volume of saline is conveyed in this manner, the circuit is programmed to close valve V**7**, open valves V**9** and V**14**, and to commence pumping saline to the saline container **288** through the plasma pump PP**2**, in through valve V**12** and out through valve V**10**, allowing saline to passively flow through the in-process pump PP**1**. Saline in returned in this manner from the in-process container **312** to the saline container **288** until weight sensing indicated that a preestablished minimum volume of saline occupies the in-process container **312**.

f. Vent Donor Line

In a sixth phase of the pre-collection cycle (Vent Donor Line), the circuit is programmed to purge air from the venipuncture needle, prior to venipuncture, by operating the donor interface pump PP**3** to pump anticoagulant through anticoagulant pump PP**4** and into the in-process container **312**.

g. Venipuncture

In a seventh phase of the pre-collection cycle (Venipuncture), the circuit is programmed to close all valves V**1** to V**23**, so that venipuncture can be accomplished.

The programming of the circuit during the phases of the pre-collection cycle is summarized in the following table.

TABLE

Programming of Blood Processing Circuit During Pre-Collection Cycle (Double Red Blood Cell Collection Procedure)

Phase	AC Prime 1	AC Prime 2	Saline Prime 1	Saline Prime 2	Saline Prime 3	Vent Donor Line	Veni-puncture
V1	●	●	●	●	●	●	●
V2	●	●	●	●	●	●	●
V3	○	○	●	●	●	○	●
V4	●	●	○	○	●	●	●
V5	●	●	●	●	●	●	●
V6	●	●	●	●	○	●	●
V7	●	●	●	●	○ (Stage 1) ● (Stage 2)	●	●
V8	●	●	●	●	●	●	●
V9	●	●	○/● Pump Out	○/● Pump Out	○/● Pump In (Stage 1) ○ (Stage 2)	●	●
V10	●	●	●	●	○ (Stage 1) ○/● Pump Out (Stage 2)	●	●
V11	○/● Pump Out	○	●	●	●	○/● Pump In	●
V12	●	●	●	●	○ (Stage 1) ○/● Pump In (Stage 2)	●	●

TABLE-continued

Programming of Blood Processing Circuit During Pre-Collection Cycle (Double Red Blood Cell Collection Procedure)

Phase	AC Prime 1	AC Prime 2	Saline Prime 1	Saline Prime 2	Saline Prime 3	Vent Donor Line	Veni-puncture
V13	○/● Pump In	○	●	●	●	○/● Pump Out	●
V14	●	●	○/● Pump In	○/● Pump In	○/● Pump Out (Stage 1) ○ (Stage 2)	●	●
V15	○	○/● Pump Out	●	●	●	○	●
V16	●	●	●	●	●	●	●
V17	●	●	●	●	●	●	●
V18	○	○	●	●	●	○	●
V19	○	○	●	●	●	○	●
V20	○	○/● Pump In	●	●	●	○	●
V21	●	●	●	●	●	●	●
V22	●	●	○	○	○	●	●
V23	●	●	○	○	○	●	●
PP1	■	■	□	□	□ (Stage 1)	■	■
PP2	■	■	■	■	□ (Stage 2)	■	■
PP3	□	■	■	■	■	□	■
PP4	■	□	■	■	■	■	■

Caption:
○ denotes an open valve;
● denotes a closed valve;
○/● denotes a valve opening and closing during a pumping sequence;
■ denotes an idle pump station (not in use); and
□ denotes a pump station in use.

2. The Collection Cycle

a. Blood Prime 1

With venipuncture, tube **300** leading to the phlebotomy needle **268** is opened. In a first phase of the collection cycle (Blood Prime 1), the blood processing circuit **46** is programmed (through the selective application of pressure to the valves and pump stations of the cassette) to operate the donor interface pump PP**3** (i.e., in through valve V**13** and out through valve V**11**) and the anticoagulant pump PP**4** (i.e., in through valve V**20** and out through valve V**15**) to draw anticoagulated blood through the donor tube **270** into the in-process container **312**. This phase continues until an incremental volume of anticoagulated whole blood enters the in-process container **312**, as monitored by the weigh sensor.

b. Blood Prime 2

In a next phase (Blood Prime 2), the blood processing circuit **46** is programmed to operate the in-process pump station PP**1** to draw anticoagulated blood from the in-process container **312** through the separation device. During this phase, saline displaced by the blood is returned to the donor. This phase primes the separation device with anticoagulated whole blood. This phase continues until an incremental volume of anticoagulated whole blood leaves the in-process container **312**, as monitored by the weigh sensor.

c. Blood Separation While Drawing Whole Blood or Without Drawing Whole Blood

In a next phase of the blood collection cycle (Blood Separation While Drawing Whole Blood), the blood processing circuit **46** is programmed to operate the donor interface pump station PP**3** (i.e., in through valve V**13** and out through valve V**11**); the anticoagulant pump PP**4** (i.e., in through valve V**20** and out through valve V**15**); the in-process pump PP**1** (i.e., in through valve V**9** and out through valve V**14**); and the plasma pump PP**2** (i.e., in through valve V**12** and out through valve V**10**). This arrangement draws anticoagulated blood into the in-process container **312**, while conveying the blood from the in-process container **312** into the processing chamber for separation. This arrangement also removes plasma from the processing chamber into the plasma container **304**, while removing red blood cells from the processing chamber into the red blood cell container **308**. This phase continues until an incremental volume of plasma is collected in the plasma collection container **304** (as monitored by the weigh sensor) or until a targeted volume of red blood cells is collected in the red blood cell collection container (as monitored by the weigh sensor).

If the volume of whole blood in the in-process container **312** reaches a predetermined maximum threshold before the

targeted volume of either plasma or red blood cells is collected, the circuit is programmed for another phase (Blood Separation Without Drawing Whole Blood), to terminate operation of the donor interface pump station PP**3** (while also closing valves V**13**, V**11**, V**18**, and V**3**) to terminate collection of whole blood in the in-process container **312**, while still continuing blood separation. If the volume of whole blood reaches a predetermined minimum threshold in the in-process container **312** during blood separation, but before the targeted volume of either plasma or red blood cells is collected, the circuit is programmed to return to the Blood Separation While Drawing Whole Blood Phase, to thereby allow whole blood to enter the in-process container **312**. The circuit is programmed to toggle between the Blood Separation While Drawing Whole Blood Phase and the Blood Separation Without Drawing Whole Blood Phase according to the high and low volume thresholds for the in-process container **312**, until the requisite volume of plasma has been collected, or until the target volume of red blood cells has been collected, whichever occurs first.

d. Return Plasma and Saline

If the targeted volume of red blood cells has not been collected, the next phase of the blood collection cycle (Return Plasma With Separation) programs the blood processing circuit **46** to operate the donor interface pump station PP**3** (i.e., in through valve V**11** and out through valve V**13**); the in-process pump PP**1** (i.e., in through valve V**9** and out through valve V**14**); and the plasma pump PP**2** (i.e., in through valve V**12** and out through valve V**10**). This arrangement conveys anticoagulated whole blood from the in-process container **312** into the processing chamber for separation, while removing plasma into the plasma container **304** and red blood cells into the red blood cell container **308**. This arrangement also conveys plasma from the plasma container **304** to the donor, while also mixing saline from the container **288** in-line with the returned plasma. The in-line mixing of saline with plasma raises the saline temperature and improves donor comfort. This phase continues until the plasma container **304** is empty, as monitored by the weigh sensor.

If the volume of whole blood in the in-process container **312** reaches a specified low threshold before the plasma container **304** empties, the circuit is programmed to enter another phase (Return Plasma Without Separation), to terminate operation of the in-process pump station PP**1** (while also closing valves V**9**, V**10**, V**12**, and V**14**) to terminate blood separation. The phase continues until the plasma container **304** empties.

e. Fill Donor Line

Upon emptying the plasma container **304**, the circuit is programmed to enter a phase (Fill Donor Line), to operate the donor interface pump station PP**3** (i.e., in through valve V**11** and out through valve V**13**) to draw whole blood from the in-process container **312** to fill the donor tube **266**, thereby purging plasma (mixed with saline) in preparation for another draw whole blood cycle.

The circuit is then programmed to conduct another Blood Separation While Drawing Whole Blood Phase, to refill the in-process container **312**. The circuit is programmed in successive Blood Separation and Return Plasma Phases until the weigh sensor indicates that a desired volume of red blood cells has been collected in the red blood cell collection container **308**. When the targeted volume of red blood cells has been collected, the post-collection cycle commences.

The programming of the circuit during the phases of the collection cycle is summarized in the following table.

TABLE

Programming of Blood Processing Circuit During The Collection Cycle (Double Red Blood Cell Collection Procedure)

Phase	Blood Prime 1	Blood Prime 2	Blood Separation While Drawing Whole Blood (Without Drawing Whole Blood)	Return Plasma/With Separation (Without Separation)	Fill Donor Line
V1	●	●	●	●	○
V2	●	●	○	○ (●)	●
V3	○	●	○ (●)	●	●
V4	●	●	●	●	●
V5	●	●	○	○	●
V6	●	●	●	○/● Alternates With V23	●
V7	●	○	●	●	○
V8	●	●	●	●	●
V9	●	○/● Pump In	○/● Pump In	○/● Pump In (●)	●
V10	●	●	○/● Pump Out	○/● Pump Out (●)	●
V11	○/● Pump Out	○	○/● Pump Out (●)	○/● Pump In	○/● Pump In
V12	●	●	○/● Pump In	○/● Pump In (●)	●
V13	○/● Pump In	○	○/● Pump In (●)	○/● Pump Out	○/● Pump Out
V14	●	○/● Pump Out	○/● Pump Out	○/● Pump Out (●)	●
V15	○/● Pump Out	●	○/● Pump Out (●)	●	●
V16	●	●	●	●	●
V17	●	●	●	●	●
V18	○	○	○ (●)	○	○
V19	○	●	○ (●)	●	●
V20	○/● Pump In	●	○/● Pump In (●)	●	●
V21	●	●	●	●	●
V22	●	●	●	○	●
V23	●	●	●	○/● Alternates With V6	●
PP1	■	□	□	□ (■)	■
PP2	■	■	□	□ (■)	■
PP3	□	■	□ (■)	□	□
PP4	□	■	□ (■)	■	■

Caption:
○ denotes an open valve;
● denotes a closed valve;
○/● denotes a valve opening and closing during a pumping sequence;
■ denotes an idle pump station (not in use); and
□ denotes a pump station in use.

3. The Post-Collection Cycle

Once the targeted volume of red blood cells has been collected (as monitored by the weigh sensor), the circuit is programmed to carry out the phases of the post-collection cycle.

a. Return Excess Plasma

In a first phase of the post-collection cycle (Excess Plasma Return), the circuit is programmed to terminate the supply and removal of blood to and from the processing chamber, while operating the donor interface pump station PP**3** (i.e., in through valve V**11** and out through valve V**13**) to convey plasma remaining in the plasma container **304** to the donor. The circuit is also programmed in this phase to mix saline from the container **288** in-line with the returned plasma. This phase continues until the plasma container **304** is empty, as monitored by the weigh sensor.

b. Saline Purge

In the next phase of the post-collection cycle (Saline Purge), the circuit is programmed to operate the in-process pump station PP**1** (i.e., in through valve V**14** and out through valve V**9**) to convey saline from the container **288** through the separation device, to displace the blood contents of the separation device into the in-process container **312**, in preparation for their return to the donor. This phase reduces the loss of donor blood. This phase continues until a predetermined volume of saline is pumped through the separation device, as monitored by the weigh sensor.

c. Final Return to Donor

In the next phase of the post-collection cycle (Final Return), the circuit is programmed to operate the donor interface pump station PP**3** (i.e., in through valve V**11** and out through valve V**13**) to convey the blood contents of the in-process container **312** to the donor. Saline is intermittently mixed with the blood contents. This phase continues until the in-process container **312** is empty, as monitored by the weigh sensor.

d. Fluid Replacement

In the next phase (Fluid Replacement), the circuit is programmed to operate the donor interface pump station PP**3** (i.e., in through valve V**11** and out through valve V**13**) to convey the saline to the donor. This phase continues until a prescribed replacement volume amount is infused, as monitored by the weigh sensor.

e. Empty In-Process Container

In the next phase of the post-collection cycle (Empty In-Process Container), the circuit is programmed to operate the donor interface pump station PP**3** (i.e., in through valve V**11** and out through valve V**13**) to convey all remaining contents of the in-process container **312** to the donor, in preparation for splitting the contents of the red blood cell container **308** for storage in both containers **308** and **312**. This phase continues until a zero volume reading for the in-process container **312** occurs, as monitored by the weigh sensor, and air is detected at the air detector.

At this phase, the circuit is programmed to close all valves and idle all pump stations, so that the phlebotomy needle **268** can be removed from the donor.

The programming of the circuit during the phases of the post-collection cycle is summarized in the following table.

TABLE

Programming of Blood Processing Circuit During The Post-Collection Cycle (Double Red Blood Cell Collection Procedure)

Phase	Excess Plasma Return	Saline Purge	Final Return	Fluid Replacement	Empty In-Process Container
V1	●	●	○	●	○
V2	●	●	●	●	●
V3	●	●	●	●	●
V4	●	○	●	●	●
V5	○	●	●	●	●
V6	○/● Alternates With V23	●	●	●	●
V7	●	●	○/● Alternates With V23	●	○
V8	●	●	●	●	●
V9	○	○/● Pump Out	●	●	●
V10	●	●	●	●	●
V11	○/● Pump In	●	○/● Pump In	○/● Pump In	○/● Pump In
V12	●	●	●	●	●
V13	○/● Pump Out	●	○/● Pump Out	○/● Pump Out	○/● Pump Out
V14	●	○/● Pump In	●	●	●
V15	●	●	●	●	●
V16	●	●	●	●	●
V17	●	●	●	●	●
V18	○	●	○	○	○
V19	●	●	●	●	●
V20	●	●	●	●	●
V21	●	●	●	●	●
V22	○	○	○	○	●
V23	○/● Alternates With V6	○	○/● Alternates With V7	○	●
PP1	■	□	■	■	■
PP2	■	■	■	■	■
PP3	□	■	□	□	□
PP4	■	■	■	■	■

Caption:
○ denotes an open valve;
● denotes a closed valve;
○/● denotes a valve opening and closing during a pumping sequence;
■ denotes an idle pump station (not in use); and
□ denotes a pump station in use.

4. The Storage Preparation Cycle

a. Split RBC

In the first phase of the storage preparation cycle (Split RBC), the circuit is programmed to operate the donor interface pump station PP**3** to transfer half of the contents of the red blood cell collection container **308** into the in-process container **312**. The volume pumped is monitored by the weigh sensors for the containers **308** and **312**.

b. Add RBC Preservative

In the next phases of the storage preparation cycle (Add Storage Solution to the In-Process Container and Add Storage Solution to the Red Blood Cell Collection Container), the circuit is programmed to operate the donor interface pump station PP**3** to transfer a desired volume of red blood cell storage solution from the container **280** first into the in-process container **312** and then into the red blood cell collection container **308**. The transfer of the desired volume is monitored by the weigh scale.

Terumo v. Haemonetics - IPR2026-00046
Petitioner Terumo Exhibit 1006-0086

c. End Procedure

In the next and final phase (End Procedure), the circuit is programmed to close all valves and idle all pump stations, so that the red blood cell containers **308** and **312** can be separated and removed for storage. The remainder of the disposable set can now be removed and discarded.

The programming of the circuit during the phases of the storage preparation cycle is summarized in the following table.

TABLE

Programming of Blood Processing Circuit During The Storage Preparation Cycle (Double Red Blood Cell Collection Procedure)

Phase	Split RBC Between RBC Collection And In-Process Containers	Add Storage Solution To In-Process Container	Add Storage Solution To RBC Collection Container	End Procedure (Remove Veni-puncture)
V1	●	●	●	●
V2	○	●	○	●
V3	○/● Alternates With V11 And V4	○	●	●
V4	○/● Alternates With V11 And V3	●	○	●
V5	●	●	●	●
V6	●	●	●	●
V7	●	●	●	●
V8	●	●	●	●
V9	●	●	●	●
V10	●	●	●	●
V11	○/● Pump In/ Pump Out	○/● Pump In/ Pump Out	○/● Pump In/ Pump Out	●
V12	●	●	●	●
V13	●	●	●	●
V14	●	●	●	●
V15	●	●	●	●
V16	●	○	○	●
V17	●	●	●	●
V18	●	●	●	●
V19	●	●	●	●
V20	●	●	●	●
V21	●	○	○	●
V22	●	●	●	●
V23	●	●	●	●
PP1	■	■	■	■
PP2	■	■	■	■
PP3	□	□	□	■
PP4	■	■	■	■

Caption:
○ denotes an open valve;
● denotes a closed valve;
○/● denotes a valve opening and closing during a pumping sequence;
■ denotes an idle pump station (not in use); and
□ denotes a pump station in use.

B. Plasma Collection (No Red Blood Cell Collection)

During this procedure, whole blood from a donor is centrifugally processed to yield up to 880 ml of plasma for collection. All red blood cells are returned to the donor. This procedure will, in shorthand, be called the plasma collection procedure.

Programming of the blood processing circuit **46** (through the selective application of pressure to the valves and pump stations of the cassette) makes it possible to use the same universal set **264** as in the double red blood cell collection procedure.

The procedure includes a pre-collection cycle, a collection cycle, and a post-collection cycle.

During the pre-collection cycle, the set **264** is primed to vent air prior to venipuncture. During the collection cycle, whole blood drawn from the donor is processed to collect plasma, while returning red blood cells to the donor. During the post-collection cycle, excess plasma is returned to the donor, and the set is flushed with saline.

1. The Pre-Collection Cycle

a. Anticoagulant Prime

In the pre-collection cycle for the plasma collection (no red blood cells) procedure, the cassette is programmed to carry out AC Prime 1 and AC Prime 2 Phases that are identical to the AC Prime 1 and AC Prime 2 Phases of the double red blood cell collection procedure.

b. Saline Prime/Vent Donor Line/Venipuncture

In the pre-collection cycle for the plasma collection (no red blood cell) procedure, the cassette is programmed to carry out Saline Prime 1, Saline Prime 2, Saline Prime 3, Vent Donor Line, and Venipuncture Phases that are identical to the Saline Prime 1, Saline Prime 2, Saline Prime 3, Vent Donor Line, and Venipuncture Phases of the double red blood cell collection procedure.

The programming of the circuit during the phases of the pre-collection cycle is summarized in the following table.

TABLE

Programming of Blood Processing Circuit During Pre-Collection Cycle (Plasma Collection Procedure)

Phase	AC Prime 1	AC Prime 2	Saline Prime 1	Saline Prime 2	Saline Prime 3	Vent Donor Line	Veni-puncture
V1	●	●	●	●	●	●	●
V2	●	●	●	●	●	●	●
V3	○	○	●	●	●	○	●
V4	●	●	○	○	●	●	●
V5	●	●	●	●	●	●	●
V6	●	●	●	●	○	●	●
V7	●	●	●	●	○	●	●

TABLE-continued

Programming of Blood Processing Circuit During Pre-Collection Cycle (Plasma Collection Procedure)

Phase	AC Prime 1	AC Prime 2	Saline Prime 1	Saline Prime 2	Saline Prime 3	Vent Donor Line	Veni-puncture
					(Stage 1) ● (Stage 2)		
V8	●	●	●	●	●	●	●
V9	●	●	○/● Pump Out	○/● Pump Out	○/● Pump In (Stage 1) ○ (Stage 2)	●	●
V10	●	●	●	●	○ (Stage 1) ○/● Pump Out (Stage 2)	●	●
V11	○/● Pump Out	○	●	●	●	○/● Pump In	●
V12	●	●	●	●	○ (Stage 1) ○/● Pump In (Stage 2)	●	●
V13	○/● Pump In	○	●	●	●	○/● Pump Out	●
V14	●	●	○/● Pump In	○/● Pump In	○/● Pump Out (Stage 1) ○ (Stage 2)	●	●
V15	○	○/● Pump Out	●	●	●	○	●
V16	●	●	●	●	●	●	●
V17	●	●	●	●	●	●	●
V18	○	○	●	●	●	○	●
V19	○	○	●	●	●	○	●
V20	○	○/● Pump In	●	●	●	○	●
V21	●	●	●	●	●	●	●
V22	●	●	○	○	○	●	●
V23	●	●	○	○	○	●	●
PP1	■	■	□	□	□ (Stage 1)	■	■
PP2	■	■	■	■	□ (Stage 2)	■	■
PP3	□	■	■	■	■	□	■
PP4	■	□	■	■	■	■	■

Caption:
○ denotes an open valve;
● denotes a closed valve;
○/● denotes a valve opening and closing during a pumping sequence;
■ denotes an idle pump station (not in use); and
□ denotes a pump station in use.

2. The Collection Cycle

a. Blood Prime 1

With venipuncture, the tube **300** leading to the phlebotomy needle **268** is opened. In a first phase of the collection cycle (Blood Prime 1), the blood processing circuit **46** is programmed to operate the donor interface pump PP**3** (i.e., in through valve V**13** and out through valve V**11**) and the anticoagulant pump PP**4** (i.e., in through valve V**20** and out through valve V**15**) to draw anticoagulated blood through the donor tube **270** into the in-process container **312**, in the same fashion as the Blood Prime 1 Phase of the double red blood cell collection procedure, as already described.

b. Blood Prime 2

In a next phase (Blood Prime 2), the blood processing circuit **46** is programmed to operate the in-process pump station PP**1** to draw anticoagulated blood from the in-process container **312** through the separation device, in the same fashion as the Blood Prime 2 Phase for the double red blood cell collection procedure, as already described. During this phase, saline displaced by the blood is returned to the donor.

c. Blood Separation While Drawing Whole Blood or Without Drawing Whole Blood

In a next phase of the blood collection cycle (Blood Separation While Drawing Whole Blood), the blood processing circuit **46** is programmed to operate the donor interface pump station PP**3** (i.e., in through valve V**13** and out through valve V**11**); the anticoagulant pump PP**4** (i.e., in through valve V**20** and out through valve V**15**); the in-process pump PP**1** (i.e., in through valve V**9** and out through valve V**14**); and the plasma pump PP**2** (i.e., in through valve V**12** and out through valve V**10**), in the same fashion as the Blood Separation While Drawing Whole Blood Phase for the double red blood cell collection procedure, as already described. This arrangement draws anticoagulated blood into the in-process container **312**, while conveying the blood from the in-process container **312** into the processing chamber for separation. This arrangement also removes plasma from the processing chamber into the plasma container **304**, while removing red blood cells from the processing chamber into the red blood cell container **308**. This phase continues until the targeted volume of plasma is collected in the plasma collection container **304** (as monitored by the weigh sensor) or until a targeted volume of red blood cells is collected in the red blood cell collection container (as monitored by the weigh sensor).

As in the double red blood cell collection procedure, if the volume of whole blood in the in-process container **312** reaches a predetermined maximum threshold before the targeted volume of either plasma or red blood cells is collected, the circuit is programmed to enter another phase (Blood Separation Without Drawing Whole Blood), to terminate operation of the donor interface pump station PP**3** (while also closing valves V**13**, V**11**, V**18**, and V**3**) to terminate collection of whole blood in the in-process container **312**, while still continuing blood separation. If the volume of whole blood reaches a predetermined minimum threshold in the in-process container **312** during blood separation, but before the targeted volume of either plasma or red blood cells is collected, the circuit is programmed to return to the Blood Separation While Drawing Whole Blood Phase, to thereby refill the in-process container **312**. The circuit is programmed to toggle between the Blood Separation Phases while drawing whole blood and without drawing whole blood, according to the high and low volume thresholds for the in-process container **312**, until the requisite volume of plasma has been collected, or until the target volume of red blood cells has been collected, whichever occurs first.

d. Return Red Blood Cells/Saline

If the targeted volume of plasma has not been collected, the next phase of the blood collection cycle (Return Red Blood Cells With Separation) programs the blood processing circuit **46** to operate the donor interface pump station PP**3** (i.e., in through valve V**11** and out through valve V**13**); the in-process pump PP**1** (i.e., in through valve V**9** and out through valve V**14**); and the plasma pump PP**2** (i.e., in through valve V**12** and out through valve V**10**). This arrangement conveys anticoagulated whole blood from the in-process container **312** into the processing chamber for separation, while removing plasma into the plasma container **304** and red blood cells into the red blood cell container **308**. This arrangement also conveys red blood cells from the red blood cell container **308** to the donor, while also mixing saline from the container **288** in-line with the returned red blood cells. The in-line mixing of saline with the red blood cells raises the saline temperature and improves donor comfort. The in-line mixing of saline with the red blood cells also lowers the hematocrit of the red blood cells being returned to the donor, thereby allowing a larger gauge (i.e., smaller diameter) phlebotomy needle to be used, to further improve donor comfort. This phase continues until the red blood cell container **308** is empty, as monitored by the weigh sensor.

If the volume of whole blood in the in-process container **312** reaches a specified low threshold before the red blood cell container **308** empties, the circuit is programmed to enter another phase (Red Blood Cell Return Without Separation), to terminate operation of the in-process pump station PP**1** (while also closing valves V**9**, V**10**, V**12**, and V**14**) to terminate blood separation. The phase continues until the red blood cell container **308** empties.

e. Fill Donor Line

Upon emptying the red blood cell container **308**, the circuit is programmed to enter another phase (Fill Donor Line), to operate the donor interface pump station PP**3** (i.e., in through valve V**11** and out through valve V**13**) to draw whole blood from the in-process container **312** to fill the donor tube **266**, thereby purging red blood cells (mixed with saline) in preparation for another draw whole blood cycle.

The circuit is then programmed to conduct another Blood Separation While Drawing Whole Blood Phase, to refill the in-process container **312**. The circuit is programmed to conduct successive draw whole blood and return red blood cells/saline cycles, as described, until the weigh sensor indicates that a desired volume of plasma has been collected in the plasma collection container **304**. When the targeted volume of plasma has been collected, the post-collection cycle commences.

The programming of the circuit during the phases of the collection cycle is summarized in the following table.

TABLE

Programming of Blood Processing Circuit During The Collection Cycle (Plasma Collection Procedure)

Phase	Blood Prime 1	Blood Prime 2	Blood Separation While Drawing Whole Blood (Without Drawing Whole Blood)	Return Red Blood Cells/ Saline With Separation (Without Separation)	Fill Donor Line
V1	●	●	●	●	○
V2	●	●	○	○	●
V3	○	●	○ (●)	●	●
V4	●	●	●	●	●
V5	●	●	○	○ (●)	●
V6	●	●	●	●	●
V7	●	○	●	○/● Alternates With V23	○
V8	●	●	●	●	●
V9	●	○/● Pump In	○/● Pump In	○/● Pump In (●)	●
V10	●	●	○/● Pump Out	○/● Pump Out (●)	●
V11	○/● Pump Out	○	○/● Pump Out (●)	○/● Pump In	○/● Pump In
V12	●	●	○/● Pump In	○/● Pump In (●)	●
V13	○/● Pump In	○	○/● Pump In (●)	○/● Pump Out	○/● Pump Out
V14	●	○/● Pump Out	○/● Pump Out	○/● Pump Out (●)	●
V15	○/● Pump Out	●	○/● Pump Out (●)	●	●
V16	●	●	●	●	●
V17	●	●	●	●	●
V18	○	○	○ (●)	○	○
V19	○	●	○ (●)	●	●
V20	○/● Pump In	●	○/● Pump In (●)	●	●
V21	●	●	●	●	●
V22	●	●	●	○	●
V23	●	●	●	○/● Alternates With V7	●
PP1	■	□	□	□ (■)	■
PP2	■	■	□	□ (■)	■
PP3	□	■	□ (■)	□	□
PP4	□	■	□ (■)	■	■

Caption:
○ denotes an open valve;
● denotes a closed valve;
○/● denotes a valve opening and closing during a pumping sequence;
■ denotes an idle pump station (not in use); and
□ denotes a pump station in use.

3. The Post-Collection Cycle

Once the targeted volume of plasma has been collected (as monitored by the weigh sensor), the circuit is programmed to carry out the phases of the post-collection cycle.

a. Remove Plasma Collection Container

In a first phase of the post-collection cycle (Remove Plasma Collection Container), the circuit is programmed to close all valves and disable all pump stations to allow separation of the plasma collection container **304** from the set **264**.

b. Return Red Blood Cells

In the second phase of the post-collection cycle (Return Red Blood Cells), the circuit is programmed to operate the donor interface pump station PP**3** (i.e., in through valve V**11** and out through valve V**13**) to convey red blood cells remaining in the red blood cell collection container **308** to the donor. The circuit is also programmed in this phase to mix saline from the container **288** in-line with the returned red blood cells. This phase continues until the red blood cell container **308** is empty, as monitored by the weigh sensor.

c. Saline Purge

In the next phase of the post-collection cycle (Saline Purge), the circuit is programmed to operate the in-process pump station PP**1** (i.e., in through valve V**14** and out through valve V**9**) to convey saline from the container **288** through the separation device, to displace the blood contents of the separation device into the in-process container **312**, in preparation for their return to the donor. This phase reduces the loss of donor blood. This phase continues until a predetermined volume of saline is pumped through the separation device, as monitored by the weigh sensor.

d. Final Return to Donor

In the next phase of the post-collection cycle (Final Return), the circuit is programmed to operate the donor interface pump station PP**3** (i.e., in through valve V**11** and out through valve V**13**) to convey the blood contents of the in-process container **312** to the donor. Saline is intermittently mixed with the blood contents. This phase continues until the in-process container **312** is empty, as monitored by the weigh sensor.

e. Fluid Replacement

In the next phase (Fluid Replacement), the circuit is programmed to operate the donor interface pump station PP**3** (i.e., in through valve V**11** and out through valve V**13**) to convey the saline to the donor. This phase continues until a prescribed replacement volume amount is infused, as monitored by the weigh sensor.

f. End Procedure

In the final phase (End Procedure), the circuit is programmed to close all valves and idle all pump stations, so that venipuncture can be terminated, and the plasma container can be separated and removed for storage. The remaining parts of the disposable set can be removed and discarded.

The programming of the circuit during the phases of the post-collection cycle is summarized in the following table.

Terumo v. Haemonetics - IPR2026-00046
Petitioner Terumo Exhibit 1006-0090

TABLE

Programming of Blood Processing Circuit During The Post-Collection Cycle (Plasma Collection Procedure)

Phase	Remove Plasma Collection Container	Return RBC	Saline Purge	Final Return	Fluid Replace-ment	End Proce-dure
V1	●	●	●	○	●	●
V2	●	○	●	●	●	●
V3	●	●	●	●	●	●
V4	●	●	○	●	●	●
V5	●	●	●	●	●	●
V6	●	●	●	●	●	●
V7	●	○/● Alternates With V23	●	○/● Alternates With V23	●	●
V8	●	●	●	●	●	●
V9	●	○	○/● Pump Out	●	●	●
V10	●	●	●	●	●	●
V11	●	○/● Pump In	●	○/● Pump In	○/● Pump In	●
V12	●	●	●	●	●	●
V13	●	○/● Pump Out	●	○/● Pump Out	○/● Pump Out	●
V14	●	●	○/● Pump In	●	●	●
V15	●	●	●	●	●	●
V16	●	●	●	●	●	●
V17	●	●	●	●	●	●
V18	○	○	●	○	○	●
V19	●	●	●	●	●	●
V20	●	●	●	●	●	●
V21	●	●	●	●	●	●
V22	●	○	○	○	○	●
V23	●	○/● Alternates With V7	○	○/● Alternates With V7	○	●
PP1	■	■	□	■	■	■
PP2	■	■	■	■	■	■
PP3	■	□	■	□	□	■
PP4	■	■	■	■	■	■

Caption:
○ denotes an open valve;
● denotes a closed valve;
○/● denotes a valve opening and closing during a pumping sequence;
■ denotes an idle pump station (not in use); and
□ denotes a pump station in use.

C. Red Blood Cell and Plasma Collection

During this procedure, whole blood from a donor is centrifugally processed to collect up to about 550 ml of plasma and up to about 250 ml of red blood cells. This procedure will, in shorthand, be called the red blood cell/plasma collection procedure.

The portion of the red blood cells not retained for collection is periodically returned to the donor during blood separation. Plasma collected in excess of the 550 ml target and red blood cells collected in excess of the 250 ml target are also returned to the donor at the end of the procedure.

Programming of the blood processing circuit **46** (through the selective application of pressure to the valves and pump stations of the cassette) makes it possible to use the same universal set **264** used to carry out the double red blood cell collection or the plasma collection procedure.

The procedure includes a pre-collection cycle, a collection cycle, and a post-collection cycle, and a storage preparation cycle.

During the pre-collection cycle, the set **264** is primed to vent air prior to venipuncture. During the collection cycle, whole blood drawn from the donor is processed to collect plasma and red blood cells, while returning a portion of the red blood cells to the donor. During the post-collection cycle, excess plasma and red blood cells are returned to the donor, and the set is flushed with saline. During the storage preparation cycle, a red blood cell storage solution is added to the collected red blood cells.

1 The Pre-Collection Cycle

a. Anticoagulant Prime

In the pre-collection cycle for the red blood cell/plasma collection procedure, the cassette is programmed to carry out AC Prime 1 and AC Prime 2 Phases that are identical to the AC Prime 1 and AC Prime 2 Phases of the double red blood cell collection procedure.

b. Saline Prime/Vent Donor Line/Venipuncture

In the pre-collection cycle for the red blood cell/plasma collection procedure, the cassette is programmed to carry out Saline Prime 1, Saline Prime 2, Saline Prime 3, Vent Donor Line, and Venipuncture Phases that are identical to the Saline Prime 1, Saline Prime 2, Saline Prime 3, Vent Donor Line, and Venipuncture Phases of the double red blood cell collection procedure.

The programming of the circuit during the phases of the pre-collection cycle is summarized in the following table.

TABLE

Programming of Blood Processing Circuit During Pre-Collection Cycle (Red Blood Cell/Plasma Collection Procedure)

Phase	AC Prime1	AC Prime 2	Saline Prime 1	Saline Prime 2	Saline Prime 3	Vent Donor Line	Veni-puncture
V1	●	●	●	●	●	●	●
V2	●	●	●	●	●	●	●
V3	○	○	●	●	●	○	●
V4	●	●	○	○	●	●	●
V5	●	●	●	●	●	●	●
V6	●	●	●	●	○	●	●
V7	●	●	●	●	○ (Stage 1) ●	●	●

TABLE-continued

Programming of Blood Processing Circuit During Pre-Collection Cycle (Red Blood Cell/Plasma Collection Procedure)

Phase	AC Prime1	AC Prime 2	Saline Prime 1	Saline Prime 2	Saline Prime 3	Vent Donor Line	Veni-puncture
					(Stage 2)		
V8	●	●	●	●	●	●	●
V9	●	●	○/● Pump Out	○/● Pump Out	○/● Pump In (Stage 1) ○ (Stage 2)	●	●
V10	●	●	●	●	○ (Stage 1) ○/● Pump Out (Stage 2)	●	●
V11	○/● Pump Out	○	●	●	●	○/● Pump In	●
V12	●	●	●	●	○ (Stage 1) ○/● Pump In (Stage 2)	●	●
V13	○/● Pump In	○	●	●	●	○/● Pump Out	●
V14	●	●	○/● Pump In	○/● Pump In	○/● Pump Out (Stage 1) ○ (Stage 2)	●	●
V15	○	○/● Pump Out	●	●	●	○	●
V16	●	●	●	●	●	●	●
V17	●	●	●	●	●	●	●
V18	○	○	●	●	●	○	●
V19	○	○	●	●	●	○	●
V20	○	○/● Pump In	●	●	●	○	●
V21	●	●	●	●	●	●	●
V22	●	●	○	○	○	●	●
V23	●	●	○	○	○	●	●
PP1	■	■	□	□	□ (Stage 1)	■	■
PP2	■	■	■	■	□ (Stage 2)	■	■
PP3	□	■	■	■	■	□	■
PP4	■	□	■	■	■	■	■

Caption:

○ denotes an open valve;

● denotes a closed valve;

○/● denotes a valve opening and closing during a pumping sequence;

■ denotes an idle pump station (not in use); and

□ denotes a pump station in use.

2. The Collection Cycle

a. Blood Prime

With venipuncture, tube **300** leading to the phlebotomy needle **268** is opened. The collection cycle of the red blood cell/plasma collection procedure programs the circuit to carry out Blood Prime 1 and Blood Prime 2 Phases that are identical to the Blood Prime 1 and Blood Prime 2 Phases of the Double Red Blood Cell Collection Procedure, already described.

b. Blood Separation While Drawing Whole Blood or Without Drawing Whole Blood

In the blood collection cycle for the red blood cell/plasma collection procedure, the circuit is programmed to conduct a Blood Separation While Drawing Whole Blood Phase, in the same fashion that the Blood Separation While Drawing Whole Blood Phase is conducted for the double red blood cell collection procedure. This arrangement draws anticoagulated blood into the in-process container **312**, while conveying the blood from the in-process container **312** into the processing chamber for separation. This arrangement also removes plasma from the processing chamber into the plasma container **304**, while removing red blood cells from the processing chamber into the red blood cell container **308**. This phase continues until the desired maximum volumes of plasma and red blood cells have been collected in the plasma and red blood cell collection containers **304** and **308** (as monitored by the weigh sensor).

As in the double red blood cell collection procedure and the plasma collection procedure, if the volume of whole blood in the in-process container **312** reaches a predetermined maximum threshold before the targeted volume of either plasma or red blood cells is collected, the circuit is programmed to enter a phase (Blood Separation Without Whole Blood Draw) to terminate operation of the donor interface pump station PP**3** (while also closing valves V**13**, V**11**, V**18**, and V**3**) to terminate collection of whole blood in the in-process container **312**, while still continuing blood separation. If the volume of whole blood reaches a predetermined minimum threshold in the in-process container **312** during blood separation, but before the targeted volume of either plasma or red blood cells is collected, the circuit is programmed to return to the Blood Separation With Whole Blood Draw, to thereby refill the in-process container **312**. The circuit is programmed to toggle between the Blood Separation cycle with whole blood draw and without whole blood draw according to the high and low volume thresholds for the in-process container **312**, until the requisite maximum volumes of plasma and red blood cells have been collected.

c. Return Red Blood Cells and Saline

If the targeted volume of plasma has not been collected, and red blood cells collected in the red blood cell container **308** exceed a predetermined maximum threshold, the next phase of the blood collection cycle (Return Red Blood Cells With Separation) programs the blood processing circuit **46** to operate the donor interface pump station PP**3** (i.e., in through valve V**11** and out through valve V**13**); the in-process pump PP**1** (i.e., in through valve V**9** and out through valve V**14**); and the plasma pump PP**2** (i.e., in through valve V**12** and out through valve V**10**). This arrangement continues to convey anticoagulated whole blood from the in-process container **312** into the processing chamber for separation, while removing plasma into the plasma container **304** and red blood cells into the red blood cell container **308**. This arrangement also conveys all or a portion of the red blood cells collected in the red blood cell container **308** to the donor. This arrangement also mixes saline from the container **288** in-line with the returned red blood cells. The in-line mixing of saline with the red blood cells raises the saline temperature and improves donor comfort. The in-line mixing of saline with the red blood cells also lowers the hematocrit of the red blood cells being returned to the donor, thereby allowing a larger gauge (i.e., smaller diameter) phlebotomy needle to be used, to further improve donor comfort.

This phase can continue until the red blood cell container **308** is empty, as monitored by the weigh sensor, thereby corresponding to the Return Red Blood Cells With Separation Phase of the plasma collection procedure. More advantageously, however, the processor determines how much additional plasma needs to be collected to meet the plasma target volume. From this, the processor derives the incremental red blood cell volume associated with the incremental plasma volume. In this arrangement, the processor returns a partial volume of red blood cells to the donor, so that, upon collection of the next incremental red blood cell volume, the total volume of red blood cells in the container **308** will be at or slightly over the targeted red blood cell collection volume.

If the volume of whole blood in the in-process container **312** reaches a specified low threshold before return of the desired volume of red blood cells, the circuit is programmed to enter a phase (Return Red Blood Cells Without Separation), to terminate operation of the in-process pump station PP**1** (while also closing valves V**9**, V**10**, V**12**, and V**14**) to terminate blood separation. This phase corresponds to the Return Red Blood Cells Without Separation Phase of the plasma collection procedure.

d. Fill Donor Line

Upon returning the desired volume of red blood cells from the container **308**, the circuit is programmed to enter a phase (Fill Donor Line), to operate the donor interface pump station PP**3** (i.e., in through valve V**11** and out through valve V**13**) to draw whole blood from the in-process container **312** to fill the donor tube **266**, thereby purging red blood cells (mixed with saline) in preparation for another draw whole blood cycle.

The circuit is then programmed to conduct another Blood Separation While Drawing Whole Blood Phase, to refill the in-process container **312**. If required, the circuit is capable of performing successive draw whole blood and return red blood cells cycles, until the weigh sensors indicate that volumes of red blood cells and plasma collected in the containers **304** and **308** are at or somewhat greater than the targeted values. The post-collection cycle then commences.

The programming of the circuit during the phases of the collection cycle is summarized in the following table.

TABLE

Programming of Blood Processing Circuit During The Collection Cycle (Red Blood Cell/Plasma Collection Procedure)

Phase	Blood Prime 1	Blood Prime 2	Blood Separation While Drawing Whole Blood (Without Drawing Whole Blood)	Return Red Blood Cells/ Saline With Separation (Without Separation)	Fill Donor Line
V1	●	●	●	●	○
V2	●	●	○	○	●

TABLE-continued

Programming of Blood Processing Circuit During The Collection Cycle (Red Blood Cell/Plasma Collection Procedure)

Phase	Blood Prime 1	Blood Prime 2	Blood Separation While Drawing Whole Blood (Without Drawing Whole Blood)	Return Red Blood Cells/ Saline With Separation (Without Separation)	Fill Donor Line
V3	○	●	○ (●)	●	●
V4	●	●	●	●	●
V5	●	●	○	○ (●)	●
V6	●	●	●	●	●
V7	●	○	●	○/● Alternates With V23	○
V8	●	●	●	●	●
V9	●	○/● Pump In	○/● Pump In	○/● Pump In (●)	●
V10	●	●	○/● Pump Out	○/● Pump Out (●)	●
V11	○/● Pump Out	○	○/● Pump Out (●)	○/● Pump In	○/● Pump In
V12	●	●	○/● Pump In	○/● Pump In (●)	●
V13	○/● Pump In	○	○/● Pump In (●)	○/● Pump Out	○/● Pump Out
V14	●	○/● Pump Out	○/● Pump Out	○/● Pump Out (●)	●
V15	○/● Pump Out	●	○/● Pump Out (●)	●	●
V16	●	●	●	●	●
V17	●	●	●	●	●
V18	○	○	○ (●)	○	○
V19	○	●	○ (●)	●	●
V20	○/● Pump In	●	○/● Pump In (●)	●	●
V21	●	●	●	●	●
V22	●	●	●	○	●
V23	●	●	●	○/● Alternates With V7	●
PP1	■	□	□	□ (■)	■
PP2	■	■	□	□ (■)	■
PP3	□	■	□ (■)	□	□
PP4	□	■	□ (■)	■	■

Caption:
○ denotes an open valve;
● denotes a closed valve;
○/● denotes a valve opening and closing during a pumping sequence;
■ denotes an idle pump station (not in use); and
□ denotes a pump station in use.

3. The Post-Collection Cycle

Once the targeted maximum volumes of plasma and red blood cells have been collected (as monitored by the weigh sensor), the circuit is programmed to carry out the phases of the post-collection cycle.

a. Return Excess Plasma

If the volume of plasma collected in the plasma collection container **304** is over the targeted volume, a phase of the post-collection cycle (Excess Plasma Return) is entered, during which the circuit is programmed to terminate the supply and removal of blood to and from the processing chamber, while operating the donor interface pump station PP**3** (i.e., in through valve V**11** and out through valve V**13**) to convey plasma in the plasma container **304** to the donor. The circuit is also programmed in this phase to mix saline from the container **288** in-line with the returned plasma. This phase continues until the volume of plasma in the plasma collection container **304** is at the targeted value, as monitored by the weigh sensor.

b. Return Excess Red Blood Cells

If the volume of red blood cells collected in the red blood cell collection container **308** is also over the targeted volume, a phase of the post-collection cycle (Excess RBC Return) is entered, during which the circuit is programmed to operate the donor interface pump station PP**3** (i.e., in through valve V**11** and out through valve V**13**) to convey red blood cells remaining in the red blood cell collection container **308** to the donor. The circuit is also programmed in this phase to mix saline from the container **288** in-line with the returned red blood cells. This phase continues until the volume of red blood cells in the container **308** equals the targeted value, as monitored by the weigh sensor.

c. Saline Purge

When the volumes of red blood cells and plasma collected in the containers **308** and **304** equal the targeted values, the next phase of the post-collection cycle (Saline Purge) is entered, during which the circuit is programmed to operate the in-process pump station PP**1** (i.e., in through valve V**14** and out through valve V**9**) to convey saline from the container **288** through the separation device, to displace the blood contents of the separation device into the in-process container **312**, in preparation for their return to the donor. This phase reduces the loss of donor blood. This phase continues until a predetermined volume of saline is pumped through the separation device, as monitored by the weigh sensor.

d. Final Return to Donor

In the next phase of the post-collection cycle (Final Return), the circuit is programmed to operate the donor interface pump station PP**3** (i.e., in through valve V**11** and out through valve V**13**) to convey the blood contents of the in-process container **312** to the donor. Saline is intermittently mixed with the blood contents. This phase continues until the in-process container **312** is empty, as monitored by the weigh sensor.

e. Fluid Replacement

In the next phase (Fluid Replacement), the circuit is programmed to operate the donor interface pump station PP**3** (i.e., in through valve V**11** and out through valve V**13**) to convey the saline to the donor. This phase continues until a prescribed replacement volume amount is infused, as monitored by the weigh sensor.

f. End Venipuncture

In the next phase (End Venipuncture), the circuit is programmed to close all valves and idle all pump stations, so that venipuncture can be terminated.

The programming of the circuit during the phases of the post-collection cycle is summarized in the following table.

TABLE

Programming of Blood Processing Circuit During The Post-Collection Cycle (Red Blood Cell/Plasma Collection Procedure)

Phase	Excess Plasma Return	Excess RBC Return	Saline Purge	Final Return	Fluid Replacement	End Venipuncture
V1	●	●	●	○	●	●
V2	●	○	●	●	●	●
V3	●	●	●	●	●	●
V4	●	●	○	●	●	●
V5	○	●	●	●	●	●
V6	○/● Alternates With V23	●	●	●	●	●
V7	●	○/● Alternates With V23	●	○/● Alternates With V23	●	●
V8	●	●	●	●	●	●
V9	○	○	○/● Pump Out	●	●	●
V10	●	●	●	●	●	●
V11	○/● Pump In	○/● Pump In	●	○/● Pump In	○/● Pump In	●
V12	●	●	●	●	●	●
V13	○/● Pump Out	○/● Pump Out	●	○/● Pump Out	○/● Pump Out	●
V14	●	●	○/● Pump In	●	●	●
V15	●	●	●	●	●	●
V16	●	●	●	●	●	●
V17	●	●	●	●	●	●
V18	○	○	●	○	○	●
V19	●	●	●	●	●	●
V20	●	●	●	●	●	●
V21	●	●	●	●	●	●
V22	○	○	○	○	○	●
V23	○/● Alternates With V6	○/● Alternates With V7	○	○/● Alternates With V7	○	●
PP1	■	■	□	■	■	■
PP2	■	■	■	■	■	■
PP3	□	□	■	□	□	■
PP4	■	■	■	■	■	■

Caption:
○ denotes an open valve;
● denotes a closed valve;
○/● denotes a valve opening and closing during a pumping sequence;
■ denotes an idle pump station (not in use); and
□ denotes a pump station in use.

4. The Storage Preparation Cycle

a. RBC Preservative Prime

In the first phase of the storage preparation cycle (Prime Storage Solution), the circuit is programmed to operate the donor interface pump station PP**3** to transfer a desired volume of red blood cell storage solution from the container **280** into the in-process container **312**. The transfer of the desired volume is monitored by the weigh scale.

b. Transfer Storage Solution

In the next phase (Transfer Storage Solution), the circuit is programmed to operate the donor interface pump station PP**3** to transfer a desired volume of red blood cell storage solution from the in-process container **312** into the red blood cell collection container **308**. The transfer of the desired volume is monitored by the weigh scale.

c. End Procedure

In the next and final phase (End Procedure), the circuit is programmed to close all valves and idle all pump stations, so that the plasma and red blood cell storage containers **304** and **308** can be separated and removed for storage. The remainder of the disposable set can now be removed and discarded.

The programming of the circuit during the phases of the storage preparation cycle is summarized in the following table.

TABLE

Programming of Blood Processing Circuit During The Storage Preparation Cycle (Red Blood Cell/Plasma Collection Procedure)

Phase	Prime Storage Solution	Transfer Storage Solution	End Procedure
V1	●	●	●
V2	●	○	●
V3	○	●	●
V4	●	○	●
V5	●	●	●
V6	●	●	●
V7	●	●	●
V8	●	●	●
V9	●	●	●
V10	●	●	●
V11	○/● Pump In/ Pump Out	○/● Pump In/ Pump Out	●
V12	●	●	●
V13	●	●	●
V14	●	●	●
V15	●	●	●
V16	○	○	●
V17	●	●	●
V18	●	●	●
V19	●	●	●
V20	●	●	●
V21	○	○	●
V22	●	●	●
V23	●	●	●
PP1	■	■	■
PP2	■	■	■
PP3	□	□	■
PP4	■	■	■

Caption:
○ denotes an open valve;
● denotes a closed valve;
○/● denotes a valve opening and closing during a pumping sequence;
■ denotes an idle pump station (not in use); and
□ denotes a pump station in use.

V. Interface Control

A. Underspill and Overspill Detection

In any of the above-described procedures, the centrifugal forces present within the processing chamber **18** separate whole blood into a region of packed red blood cells and a region of plasma (see FIG. **15**A). The centrifugal forces cause the region of packed red blood cells to congregate along the

Terumo v. Haemonetics - IPR2026-00046
Petitioner Terumo Exhibit 1006-0095

outside or high-G wall of the chamber, while the region of plasma is transported to the inside or low-G wall of the chamber.

An intermediate region forms an interface between the red blood cell region and the plasma region. Intermediate density cellular blood species like platelets and leukocytes populate the interface, arranged according to density, with the platelets closer to the plasma layer than the leukocytes. The interface is also called the "buffy coat," because of its cloudy color, compared to the straw color of the plasma region and the red color of the red blood cell region.

It is desirable to monitor the location of the buffy coat, either to keep the buffy coat materials out of the plasma or out of the red blood cells, depending on the procedure, or to collect the cellular contents of the buffy coat. The system includes a sensing station **332** comprising two optical sensors **334** and **336** for this purpose.

In the illustrated embodiment of FIG. **13**, the sensing station **332** is located a short distance outside the centrifuge station **20**. This arrangement minimizes the fluid volume of components leaving the chamber before monitoring by the sensing station **332**.

The first sensor **334** in the station **332** optically monitors the passage of blood components through the plasma collection tube **292**. The second sensor **336** in the station **332** optically monitors the passage of blood components through the red blood cell collection tube **294**.

The tubes **292** and **294** are made from plastic (e.g. polyvinylchloride) material that is transparent to the optical energy used for sensing, at least in the region where the tubes **292** and **294** are to be placed into association with the sensing station **332**.

In the illustrated embodiment, the set **264** includes a fixture **338** (see FIGS. **16** to **18**) to hold the tubes **292** and **294** in viewing alignment with their respective sensor **334** and **336**. The fixture **338** gathers the tubes **292** and **294** in a compact, organized, side-by-side array, to be placed and removed as a group in association with the sensors **334** and **336**, which are also arranged in a compact, side-by-side relationship within the station **332**.

In the illustrated embodiment, the fixture **338** also holds the tube **290**, which conveys whole blood into the centrifuge station **20**, even though no associated sensor is provided. The fixture **338** serves to gather and hold all tubes **290**, **292**, and **294** that are coupled to the umbilicus **296** in a compact and easily handled bundle.

The fixture **338** can be an integral part of the umbilicus **296**, formed, e.g., by over molding. Alternatively, the fixture **338** can be a separately fabricated part, which snap fits about the tubes **290**, **292**, and **294** for use.

In the illustrated embodiment (as FIG. **2** shows), the containers **304**, **308**, and **312** coupled to the cassette **28** are suspended during use above the centrifugation station **20**. In this arrangement, the fixture **338** directs the tubes **290**, **292**, and **294** through an abrupt, ninety degree bend immediately beyond the end of the umbilicus **296** to the cassette **28**. The bend imposed by the fixture **338** directs the tubes **290**, **292**, and **294** in tandem away from the area immediately beneath the containers **304**, **308**, and **312**, thereby preventing clutter in this area. The presence of the fixture **338** to support and guide the tubes **290**, **292**, and **294** through the bend also reduces the risk of kinking or entanglement.

The first sensor **334** is capable of detecting the presence of optically targeted cellular species or components in the plasma collection tube **292**. The components that are optically targeted for detection vary depending upon the procedure.

For a plasma collection procedure, the first sensor **334** detects the presence of platelets in the plasma collection tube **292**, so that control measures can be initiated to move the interface between the plasma and platelet cell layer back into the processing chamber. This provides a plasma product that can be essentially platelet-free or at least in which the number of platelets is minimized.

For a red blood cell-only collection procedure, the first sensor **334** detects the interface between the buffy coat and the red blood cell layer, so that control measures can be initiated to move this interface back into the processing chamber. This maximizes the red blood cell yield.

For a buffy coat collection procedure (which will be described later), the first sensor **334** detects when the leading edge of the buffy coat (i.e., the plasma/platelet interface) begins to exit the processing chamber, as well as detects when the trailing edge of the buffy coat (i.e., the buffy coat/red blood cell interface) has completely exited the processing chamber.

The presence of these cellular components in the plasma, as detected by the first sensor **334**, indicates that the interface is close enough to the low-G wall of the processing chamber to allow all or some of these components to be swept into the plasma collection line (see FIG. **15**B). This condition will also be called an "overspill."

The second sensor **336** is capable of detecting the hematocrit of the red blood cells in the red blood cell collection tube **294**. The decrease of red blood hematocrit below a set minimum level during processing indicates that the interface is close enough to the high-G wall of the processing chamber to allow plasma and/or buffy coat materials to enter the red blood cell collection tube **294** (see FIG. **15**C). This condition will also be called an "underspill."

B. The Sensing Circuit

The sensing station **332** includes a sensing circuit **340** (see FIG. **19**), of which the first sensor **334** and second sensor **336** form a part.

The first sensor **334** includes one green light emitting diode (LED) **350**, one red LED **352**, and two photodiodes **354** and **355**. The photodiode **354** measures transmitted light and the photodiode **355** measures reflected light.

The second sensor **336** includes one red LED **356** and two photodiodes **358** and **360**. The photodiode **358** measures transmitted light and the photodiode **360** measures reflected light.

The sensing circuit **340** further includes an LED driver component **342**. The driver component **342** includes a constant current source **344**, coupled to the LED's **350**, **352**, and **356** of the sensors **334** and **336**. The constant current source **344** supplies a constant current to each LED **350**, **352**, and **356**, independent of temperature and the power supply voltage levels. The constant current source **344** thereby provides a constant output intensity for each LED **350**, **352**, and **356**.

The LED drive component **342** includes a modulator **346**. The modulator **346** modulates the constant current at a prescribed frequency. The modulator **346** removes the effects of ambient light and electromagnetic interference (EMI) from the optically sensed reading, as will be described in greater detail later.

The sensing circuit **340** also includes a receiver circuit **348** coupled to the photodiodes **354**, **355**, **358**, and **360**. The receiver circuit **348** includes, for each photodiode **354**, **355**, **358**, and **360**, a dedicated current-to-voltage (I-V) converter **362**. The remainder of the receiver circuit **348** includes a bandpass filter **364**, a programmable amplifier **366**, and a full

wave rectifier **368**. These components **364**, **366**, and **368** are shared, e.g., using a multiplexer.

Ambient light typically contains frequency components less than 1000 Hz, and EMI typically contains frequency components above 2 kHz. With this in mind, the modulator **346** modulates the current at a frequency below the EMI frequency components, e.g., at about 2 kHz. The bandpass filter **364** has a center frequency of about the same value, i.e., about 2 kHz. The sensing circuit **340** eliminates frequency components above and below the ambient light source and EMI components from the sensed measurement. In this way, the sensing circuit **340** is not sensitive to ambient lighting conditions and EMI.

More particularly, transmitted or reflected light from the tube **292** or **294** containing the fluid to be measured is incident on photodiodes **354** and **355** (for the tube **292**) or photodiodes **358** and **360** (for tube **294**). Each photodiode produces a photocurrent proportional to the received light intensity. This current is converted to a voltage. The voltage is fed, via the multiplexer **370**, to the bandpass filter **364**. The bandpass filter **364** has a center frequency at the carrier frequency of the modulated source light (i.e., 2 kHz in the illustrated embodiment).

The sinusoidal output of the bandpass filter **364** is sent to the variable gain amplifier **366**. The gain of the amplifier is preprogrammed in preestablished steps, e.g., X1, X10, X100, and X1000. This provides the amplifier with the capability to respond to a large dynamic range.

The sinusoidal output of the amplifier **366** is sent to the full wave rectifier **368**, which transforms the sinusoidal output to a DC output voltage proportional to the transmitted light energy.

The controller **16** generates timing pulses for the sensing circuit **340**. The timing pulses comprise, for each LED, (i) a modulation square wave at the desired modulation frequency (i.e., 2 kHz in the illustrated embodiment), (ii) an enable signal, (iii) two sensor select bits (which select the sensor output to feed to the bandpass filter **364**), and (iv) two bits for the receiver circuit gain selection (for the amplifier **366**).

The controller **16** conditions the driver circuit **342** to operate each LED in an ON state and an OFF state.

In the ON state, the LED enable is set HIGH, and the LED is illuminated for a set time interval, e.g., 100 ms. During the first 83.3 ms of the ON state, the finite rise time for the incident photodiode and receiver circuit **348** are allowed to stabilize. During the final 16.7 ms of the ON state, the output of the circuit **340** is sampled at twice the modulation rate (i.e., 4 kHz in the illustrated embodiment). The sampling interval is selected to comprise one complete cycle of 60 Hz, allowing the main frequency to be filtered from the measurement. The 4 kHz sampling frequency allows the 2 kHz ripple to be captured for later removal from the measurement.

During the OFF state, the LED is left dark for 100 ms. The LED baseline due to ambient light and electromagnetic interference is recorded during the final 16.7 ms.

1. The First Sensor: Platelet/RBC Differentiation

In general, cell free ("free") plasma has a straw color. As the concentration of platelets in the plasma increases, the clarity of the plasma decreases. The plasma looks "cloudy." As the concentration of red blood cells in the plasma increases, the plasma color turns from straw to red.

The sensing circuit **340** includes a detection/differentiation module **372**, which analyzes sensed attenuations of light at two different wavelengths from the first sensor **334** (using the transmitted light sensing photodiode **354**). The different wavelengths are selected to possess generally the same optical attenuation for platelets, but significantly different optical attenuations for red blood cells.

In the illustrated embodiment, the first sensor **334** includes an emitter **350** of light at a first wavelength (λ_1), which, in the illustrated embodiment, is green light (570 nm and 571 nm). The first sensor **334** also includes an emitter **352** of light at a second wavelength (λ_2), which, in the illustrated embodiment, is red light (645 nm to 660 nm).

The optical attenuation for platelets at the first wavelength ($\epsilon_{platelets}^{\lambda}{}_1$) and the optical attenuation for platelets at the second wavelength ($\epsilon_{platelets}^{\lambda}{}_2$) are generally the same. Thus, changes in attenuation over time, as affected by increases or decreases in platelet concentration, will be similar.

However, the optical attenuation for hemoglobin at the first wavelength ($\epsilon_{Hb}^{\lambda}{}_1$) is about ten times greater than the optical attenuation for hemoglobin at the second wavelength ($\epsilon_{Hb}^{\lambda}{}_2$). Thus, changes in attenuation over time, as affected by the presence of red blood cells, will not be similar.

The tube **292**, through which plasma is to be sensed, is transparent to light at the first and second wavelengths. The tube **292** conveys the plasma flow past the first and second emitters **350** and **352**.

The light detector **354** receives light emitted by the first and second emitters **350** and **352** through the tube **292**. The detector **354** generates signals proportional to intensities of received light. The intensities vary with optical attenuation caused by the presence of platelets and/or red blood cells.

The module **372** is coupled to the light detector **354** to analyze the signals to derive intensities of the received light at the first and second wavelengths. The module **372** compares changes of the intensities of the first and second wavelengths over time. When the intensities of the first and second wavelengths change over time in substantially the same manner, the module **372** generates an output representing presence of platelets in the plasma flow. When the intensities of the first and second wavelengths change over time in a substantially different manner, the module **372** generates an output representing presence of red blood cells in the plasma flow. The outputs therefore differentiate between changes in intensity attributable to changes in platelet concentration in the plasma flow and changes in intensity attributable to changes in red blood cell concentration in the plasma flow.

There are various ways to implement the module **372**. In one embodiment, the detection/differentiation module **372** considers that the attenuation of a beam of monochromatic light of wavelength λ by a plasma solution can be described by the modified Lambert-Beer law, as follows:

$$I=I_O e^{-[(\epsilon_{Hb}^{\lambda} C_{Hb}^{H}+\epsilon_{platelets}^{\lambda} C_{platlets})d+G_{platelets}^{\lambda}+G_{RBC}^{\lambda}]} \quad (1)$$

where:

I is transmitted light intensity.

I_O is incident light intensity.

ϵ_{Hb}^{λ} is the optical attenuation of hemoglobin (Hb) (gm/dl) at the applied wavelength.

$\epsilon_{platelets}^{\lambda}$ is the optical attenuation of platelets at the applied wavelength.

C_{Hb} is the concentration of hemoglobin in a red blood cell, taken to be 34 gm/dl.

$C_{platelets}$ is the concentration of platelets in the sample.

d is the thickness of the plasma stream through the tube **294**.

G^{λ} is the path length factor at the applied wavelength, which accounts for additional photon path length in the plasma sample due to light scattering.

H is whole blood hematocrit, which is percentage of red blood cells in the sample.

G_{RBC}^{λ} and $G_{platelets}^{\lambda}$ are a function of the concentration and scattering coefficients of, respectively, red blood cells and platelets at the applied wavelengths, as well as the measurement geometry.

For wavelengths in the visible and near infrared spectrum, $\epsilon_{platelets}^{\lambda}\approx 0$, therefore:

$$\mathrm{Ln}\left(\frac{I^{\lambda}}{I_O^{\lambda}}\right) = \mathrm{Ln}(T^{\lambda}) \approx -[(\varepsilon_{Hb}^{\lambda} C_{Hb} H)d + G_{platelets}^{\lambda} + G_{RBC}^{\lambda}] \quad (2)$$

In an overspill condition (shown in FIG. **15**B), the first cellular component to be detected by the first sensor **334** in the plasma collection line **292** will be platelets. Therefore, for the detection of platelets, $\mathrm{Ln}(T^{\lambda})\approx G_{platelets}^{\lambda}$.

To detect the buffy coat interface between the platelet layer and the red blood cell layer, the two wavelengths (λ_1 and λ_2) are chosen based upon the criteria that (i) λ_1 and λ_2 have approximately the same path length factor (G^{λ}), and (ii) one wavelength λ_1 or λ_2 has a much greater optical attenuation for hemoglobin than the other wavelength.

Assuming the wavelengths λ_1 and λ_2 have the same G^{λ}, Equation (2) reduces to:

$$\mathrm{Ln}(T^{\lambda}{}_1)-\mathrm{Ln}(T^{\lambda}{}_2)\approx HdC_{Hb}(\epsilon_{Hb}{}^{\lambda}{}_2-\epsilon_{Hb}{}^{\lambda}{}_1) \quad (3)$$

In one embodiment, λ_1=660 nm (green) and λ_2=571 nm (red). The path length factor (G^{λ}) for 571 nm light is greater than for 660 nm light. Therefore the path length factors have to be modified by coefficients α and β, as follows:

$$G_{RBC}^{\lambda 1}=\alpha G_{RBC}^{\lambda 2}$$

$$G_{platelets}^{\lambda 1}=\beta G_{Platelets}^{\lambda 2}$$

Therefore, Equation (3) can be reexpressed as follows:

$$\mathrm{Ln}(T^{\lambda}{}_1)-\mathrm{Ln}(T^{\lambda}{}_2)\approx HdC_{Hb}(\epsilon_{Hb}{}^{\lambda}{}_2-\epsilon_{Hb}{}^{\lambda}{}_1)+(\alpha-1)G_{RBC}{}^{\lambda}{}_1+(\beta-1)G_{platelets}{}^{\lambda}{}_2 \quad (4)$$

In the absence of red blood cells, Equation (3) causes a false red blood cell detect with increasing platelet concentrations, as Equation (5) demonstrates:

$$\mathrm{Ln}(T^{\lambda}{}_1)-\mathrm{Ln}(T^{\lambda}{}_2)=(\beta-1)G_{platelets}{}^{\lambda}{}_1 \quad (5)$$

For the detection of platelets and the interface between the platelet/red blood cell layers, Equation (4) provides a better resolution. The module **372** therefore applies Equation (4). The coefficient ($\beta-1$) can be determined by empirically measuring $G_{platelets}^{\lambda 1}$ and $G_{platelets}^{\lambda 2}$ in the desired measurement geometry for different known concentrations of platelets in prepared platelet-spiked plasma.

The detection/differentiation module **372** also differentiates between intensity changes due to the presence of red blood cells in the plasma or the presence of free hemoglobin in the plasma due to hemolysis. Both circumstances will cause a decrease in the output of the transmitted light sensing photodiode **354**. However, the output of the reflected light sensing photodiode **355** increases in the presence of red blood cells and decreases in the presence of free hemoglobin. The detection/differentiation module **372** thus senses the undesired occurrence of hemolysis during blood processing, so that the operator can be alerted and corrective action can be taken.

2. The Second Sensor: Packed Red Blood Cell Measurement

In an underspill condition (shown in FIG. **15**C), the hematocrit of red blood cells exiting the processing chamber **18** will dramatically decrease, e.g., from a targeted hematocrit of about 80 to a hematocrit of about 50, as plasma (and the buffy coat) mixes with the red blood cells. An underspill condition is desirable during a plasma collection procedure, as it allows the return of the buffy coat to the donor with the red blood cells. An underspill condition is not desired during a red blood cell-only collection procedure, as it jeopardizes the yield and quality of red blood cells that are collected for storage.

In either situation, the ability to sense when an underspill condition exists is desirable.

Photon wavelengths in the near infrared spectrum (NIR) (approximately 540 nm to 1000 nm) are suitable for sensing red blood cells, as their intensity can be measured after transmission through many millimeters of blood.

The sensing circuit **340** includes a red blood cell detection module **374**. The detection module **374** analyzes sensed optical transmissions of the second sensor **336** to discern the hematocrit and changes in the hematocrit of red blood cells exiting the processing chamber **18**.

The detection module **374** considers that the attenuation of a beam of monochromatic light of wavelength λ by blood may be described by the modified Lambert-Beer law, as follows:

$$I=I_O e^{-[(\epsilon_{Hb}{}^{\lambda} C_{Hb} H)d+G_{RBC}{}^{\lambda}]} \quad (6)$$

where:

I is transmitted light intensity.

I_O is incident light intensity.

$\epsilon_{Hb}{}^{\lambda}$ is the extinction coefficient of hemoglobin (Hb) (gm/dl) at the applied wavelength.

C_{Hb} is the concentration of hemoglobin in a red blood cell, taken to be 34 gm/dl.

d is the distance between the light source and light detector.

G^{λ} is the path length factor at the applied wavelength, which accounts for additional photon path length in the media due to light scattering.

H is whole blood hematocrit, which is percentage of red blood cells in the sample.

$G_{RBC}{}^{\lambda}$ is a function of the hematocrit and scattering coefficients of red blood cells at the applied wavelengths, as well as the measurement geometry.

Given Equation (6), the optical density O.D. of the sample can be expressed as follows:

$$\mathrm{Ln}\left(\frac{I^{\lambda}}{I_O^{\lambda}}\right) = O.D. \approx -[(\varepsilon_{Hb}^{\lambda} C_{Hb} H)d + G_{RBC}^{\lambda}] \quad (7)$$

The optical density of the sample can further be expressed as follows:

$$O.D.=O.D._{Absorption}O.D._{Scattering} \quad (8)$$

where:

$O.D._{Absorption}$ is the optical density due to absorption by red blood cells, expressed as follows:

$$O.D._{Absorption}=-(\epsilon_{Hb}{}^{\lambda} C_{Hb} H)d \quad (9)$$

$O.D._{Scattering}$ is the optical density due to scattering of red blood cells, expressed as follows:

$$O.D._{Scattering}=-G_{RBC}{}^{\lambda} \quad (10)$$

From Equation (9), $O.D._{Absorption}$ increases linearly with hematocrit (H). For transmittance measurements in the red and NIR spectrum, $G_{RBC}{}^{\lambda}$ is generally parabolic, reaching a maximum at a hematocrit of between 50 and 75 (depending on illumination wavelength and measurement geometry) and is zero at hematocrits of 0 and 100 (see, e.g., Steinke et al., "Diffusion Model of the Optical Absorbance of Whole Blood," J. Opt. Soc. Am., Vol 5, No. 6, June 1988). Therefore,

for light transmission measurements, the measured optical density is a nonlinear function of hematocrit.

Nevertheless, it has been discovered that G_{RBC}^{λ} for reflected light measured at a predetermined radial distance from the incident light source is observed to remain linear for the hematocrit range of at least 10 to 90. Thus, with the second sensor **336** so configured, the detection module can treat the optical density of the sample for the reflected light to be a linear function of hematocrit. The same relationship exists for the first sensor **334** with respect to the detection of red blood cells in plasma.

This arrangement relies upon maintaining straightforward measurement geometries. No mirrors or focusing lenses are required. The LED or photodiode need not be positioned at an exact angle with respect to the blood flow tube. No special optical cuvettes are required. The second sensor **336** can interface directly with the transparent plastic tubing **294**. Similarly, the first sensor **334** can interface directly with the transparent tubing **292**.

In the illustrated embodiment, the wavelength 805 nm is selected, as it is an isosbestic wavelength for red blood cells, meaning that light absorption by the red blood cells at this wavelength is independent of oxygen saturation. Still, other wavelengths can be selected within the NIR spectrum.

In the illustrated embodiment, for a wavelength of 805 nm, the set distance may be 7.5 mm from the light source. The fixture **338**, above described (see FIG. **18**), facilitates the placement of the tube **294** in the desired relation to the light source and the reflected light detector of the second sensor **336**. The fixture **338** also facilitates the placement of the tube **292** in the desired relation to the light source and the reflected light detector of the first sensor **334**.

Measurements at a distance greater than 7.5 mm can be made and will show a greater sensitivity to changes in the red blood cell hematocrit. However a lower signal to noise ratio will be encountered at these greater distances. Likewise, measurements at a distance closer to the light source will show a greater signal to noise ratio, but will be less sensitive to changes in the red blood cell hematocrit. The optimal distance for a given wavelength in which a linear relationship between hematocrit and sensed intensity exists for a given hematocrit range can be empirically determined.

The second sensor **336** detects absolute differences in the mean transmitted light intensity of the signal transmitted through the red blood cells in the red blood cell collection line. The detection module analyzes these measured absolute differences in intensities, along with increases in the standard deviation of the measured intensities, to reliably signal an underspill condition, as FIG. **20** shows.

At a given absolute hematocrit, G_{RBC}^{λ} varies slightly from donor to donor, due to variations in the mean red blood cell volume and/or the refractive index difference between the plasma and red blood cells. Still, by measuring the reflected light from a sample of a given donor's blood having a known hematocrit, G_{RBC}^{λ} may be calibrated to yield, for that donor, an absolute measurement of the hematocrit of red blood cells exiting the processing chamber.

C. Pre-Processing Calibration of the Sensors

The first and second sensors **334** and **336** are calibrated during the saline and blood prime phases of a given blood collection procedure, the details of which have already been described.

During the saline prime stage, saline is conveyed into the blood processing chamber **18** and out through the plasma collection line **292**. During this time, the blood processing chamber **18** is rotated in cycles between 0 RPM and 200 RPM, until air is purged from the chamber **18**. The speed of rotation of the processing chamber **18** is then increased to full operational speed.

The blood prime stage follows, during which whole blood is introduced into the processing chamber **18** at the desired whole blood flow rate (Q_{WB}). The flow rate of plasma from the processing chamber through the plasma collection line **292** is set at a fraction (e.g., 80%) of the desired plasma flow rate (Q_p) from the processing chamber **18**, to purge saline from the chamber **18**. The purge of saline continues under these conditions until the first sensor **334** optically senses the presence of saline in the plasma collection line **292**.

1. For Plasma Collection Procedures (Induced Underspill)

If the procedure to be performed collects plasma for storage (e.g., the Plasma Collection Procedure or the Red Blood Cell/Plasma Collection Procedure), an underspill condition is induced during calibration. The underspill condition is created by decreasing or stopping the flow of plasma through the plasma collection line **292**. This forces the buffy coat away from the low-G side of the chamber **18** (as FIG. **15**C) to assure that a flow of "clean" plasma exists in the plasma collection line **292**, free or essentially free of platelets and leukocytes. The induced underspill allows the first sensor **334** to be calibrated and normalized with respect to the physiologic color of the donor's plasma, taking into account the donor's background lipid level, but without the presence of platelets or leukocytes. The first sensor **334** thereby possesses maximum sensitivity to changes brought about by the presence of platelets or leukocytes in the buffy coat, should an overspill subsequently occur during processing.

Forcing an underspill condition also positions the interface close to the high-G wall at the outset of blood processing. This creates an initial offset condition on the high-G side of the chamber, to prolong the ultimate development of an overspill condition as blood processing proceeds.

2. Red Blood Cell Collection Procedures

If a procedure is to be performed in which no plasma is to be collected (e.g., the Double Unit Red Blood Cell Collection Procedure), an underspill condition is not induced during the blood purge phase. This is because, in a red blood cell only collection procedure, the first sensor **334** need only detect, during an overspill, the presence of red blood cells in the plasma. The first sensor **334** does not need to be further sensitized to detect platelets. Furthermore, in a red blood cell only collection procedure, it may be desirable to keep the interface as near the low-G wall as possible. The desired condition allows the buffy coat to be returned to the donor with the plasma and maximizes the hematocrit of the red blood cells collected.

D. Blood Cell Collection

1. Plasma Collection Procedures

In procedures where plasma is collected (e.g., the Plasma Collection Procedure or the Red Blood Cell/Plasma Collection Procedure), Q_P is set at $Q_{P(Ideal)}$, which is an empirically determined plasma flow rate that allows the system to maintain a steady state collection condition, with no underspills and no overspills.

$Q_{P(Ideal)}$ (in grams/ml) is a function of the anticoagulated whole blood inlet flow rate Q_{WB}, the anticoagulant whole blood inlet hematocrit HCT_{WB}, and the red blood cell exit hematocrit HCT_{RBC} (as estimated or measured), expressed as follows:

$$Q_{P(Ideal)} = \left(\rho_{Plasma} Q_{WB} * \frac{(1 - HCT_{WB}) - \left[\frac{\rho_{WB}}{\rho_{RBC}}(1 - HCT_{RBC})\right]}{\left(1 - \frac{\rho_{plasma}}{\rho_{RBC}}\right)(1 - HCT_{RBC})} \right.$$

where:

ρ_{Plasma} is the density of plasma (in g/ml)=1.03

ρ_{WB} is the density of whole blood (in g/ml)=1.05

ρ_{RBC} is the density of red blood cells=1.08

Q_{WB} is set to the desired whole blood inlet flow rate for plasma collection, which, for a plasma only collection procedure, is generally about 70 ml/min. For a red blood cell/plasma collection procedure, Q_{WB} is set at about 50 ml/min, thereby providing packed red blood cells with a higher hematocrit than in a traditional plasma collection procedure.

The system controller **16** maintains the pump settings until the desired plasma collection volume is achieved, unless an underspill condition or an overspill condition is detected.

If set Q_P is too high for the actual blood separation conditions, or, if due to the physiology of the donor, the buffy coat volume is larger (i.e., "thicker") than expected, the first sensor **334** will detect the presence of platelets or leukocytes, or both in the plasma, indicating an overspill condition.

In response to an overspill condition caused by a high Q_P, the system controller **16** terminates operation of the plasma collection pump PP**2**, while keeping set Q_{WB} unchanged. In response to an overspill condition caused by a high volume buffy coat, the system controller **16** terminates operation of the plasma collection pump PP**2**, until an underspill condition is detected by the red blood cell sensor **336**. This serves to expel the buffy coat layer from the separation chamber through the red blood cell tube **294**.

To carry out the overspill response, the blood processing circuit **46** is programmed to operate the in-process pump PP**1** (i.e., drawing in through the valve V**9** and expelling out of the valve V**14**), to draw whole blood from the in-process container **312** into the processing chamber **18** at the set Q_{WB}. Red blood cells exit the chamber **18** through the tube **294** for collection in the collection container **308**. The flow rate of red blood cells directly depends upon the magnitude of Q_{WB}.

During this time, the blood processing circuit **46** is also programmed to cease operation of the plasma pump PP**2** for a preestablished time period (e.g., **20** seconds). This forces the interface back toward the middle of the separation chamber. After the preestablished time period, the operation of the plasma pump PP**2** is resumed, but at a low flow rate (e.g., 10 ml/min) for a short time period (e.g., 10 seconds). If the spill has been corrected, clean plasma will be detected by the first sensor **334**, and normal operation of the blood processing circuit **46** is resumed. If clean plasma is not sensed, indicating that the overspill has not been corrected, the blood processing circuit **46** repeats the above-described sequence.

The programming of the circuit to relieve an overspill condition is summarized in the following table.

TABLE

Programming of Blood Processing Circuit To Relieve An Overspill Condition (Plasma Collection Procedures)

V1	●
V2	○
V3	●
V4	●
V5	○
V6	●
V7	●
V8	●
V9	○/● Pump In
V10	●
V11	●
V12	●
V13	●
V14	○/● Pump Out
V15	●
V16	●
V17	●
V18	●
V19	●
V20	●
V21	●
V22	●
V23	●
PP1	□
PP2	■
PP3	■
PP4	■

Caption:
○ denotes an open valve;
● denotes a closed valve;
○/● denotes a valve opening and closing during a pumping sequence;
■ denotes an idle pump station (not in use); and
□ denotes a pump station in use.

Upon correction of an overspill condition, the controller **16** returns the blood processing circuit **46** to resume normal blood processing, but applies a percent reduction factor (%RF) to the Q_P set at the time the overspill condition was initially sensed. The reduction factor (%RF) is a function of the time between overspills, i.e., %RF increases as the frequency of overspills increases, and vice versa.

If set Q_P is too low, the second sensor **336** will detect a decrease in the red blood cell hematocrit below a set level, which indicates an underspill condition.

In response to an underspill condition, the system controller **16** resets Q_P close to the set Q_{WB}. As processing continues, the interface will, in time, move back toward the low-G wall. The controller **16** maintains these settings until the second sensor **336** detects a red blood cell hematocrit above the desired set level. At this time, the controller **16** applies a percent enlargement factor (%EF) to the Q_P set at the time the underspill condition was initially sensed. The enlargement factor (%EF) is a function of the time between underspills, i.e., %EF increases as the frequency of underspills increases.

Should the controller **16** be unable to correct a given under- or overspill condition after multiple attempts (e.g., three attempts), an alarm is commanded.

2. Red Blood Cell Only Collection Procedures

In procedures where only red blood cells and no plasma is collected (e.g., the Double Unit Red Blood Cell Collection Procedure), Q_P is set to no greater than $Q_{P(Ideal)}$, and Q_{WB} is set to the desired whole blood inlet flow rate into the processing chamber **18** for the procedure, which is generally about 50 ml/min for a double unit red blood cell collection procedure.

It may be desired during a double unit red blood cell collection procedure that overspills occur frequently. This maxi-

mizes the hematocrit of the red blood cells for collection and returns the buffy coat to the donor with the plasma. Q_P is increased over time if overspills occur at less than a set frequency. Likewise, Q_P is decreased over time if overspills occur above the set frequency. However, to avoid an undesirably high hematocrit, it may be just as desirable to operate at $Q_{P(Ideal)}$.

The system controller **16** controls the pump settings in this way until the desired red blood cell collection volume is achieved, taking care of underspills or overspills as they occur.

The first sensor **334** detects an overspill by the presence of red blood cells in the plasma. In response to an overspill condition, the system controller **16** terminates operation of the plasma collection pump to draw plasma from the processing chamber, while keeping the set Q_{WB} unchanged.

To implement the overspill response, the blood processing circuit **46** is programmed (through the selective application of pressure to the valves and pump stations) to operate the plasma pump PP**2** and in-process pump PP**1** in the manner set forth in the immediately preceding Table. The red blood cells detected in the tube **292** are thereby returned to the processing chamber **18**, and are thereby prevented from entering the plasma collection container **304**.

The interface will, in time, move back toward the high-G wall. The controller **16** maintains these settings until the second sensor **336** detects a decrease in the red blood cell hematocrit below a set level, which indicates an underspill condition.

In response to an underspill condition, the system controller **16** increases Q_P until the second sensor **336** detects a red blood cell hematocrit above the desired set level. At this time, the controller **16** resets Q_P to the value at the time the most recent overspill condition was sensed.

3. Buffy Coat Collection

If desired, an overspill condition can be periodically induced during a given plasma collection procedure to collect the buffy coat in a buffy coat collection container **376** (see FIG. **10**). As FIG. **10** shows, in the illustrated embodiment, the buffy coat collection container **376** is coupled by tubing **378** to the buffy port P**4** of the cassette **28**. The buffy coat collection container **376** is suspended on a weigh scale **246**, which provides output reflecting weight changes over time, from which the controller **16** derives the volume of buffy coat collected.

In this arrangement, when the induced overspill condition is detected, the blood processing circuit **46** is programmed (through the selective application of pressure to the valves and pump stations) to operate the plasma pump PP**2** (i.e., drawing in through valve V**12** and expelling out through valve V**10**), to draw plasma from the processing chamber **18** through the tube **378**, while valves V**4** and V**6** are closed and valve V**8** is opened. The buffy coat in the tube **378** is conveyed into the buffy coat collection container **376**. The blood processing circuit **46** is also programmed during this time to operate the in-process pump PP**1** (i.e., drawing in through the valve V**9** and expelling out of the valve V**14**), to draw whole blood from the in-process container **312** into the processing chamber **18** at the set Q_{WB}. Red blood cells exit the chamber **18** through the tube **294** for collection in the collection container **308**.

The programming of the circuit to relieve an overspill condition by collecting the buffy coat in the buffy coat collection container **376** is summarized in the following table.

TABLE

Programming of Blood Processing Circuit To Relieve An Overspill Condition by Collecting the Buffy Coat (Plasma Collection Procedures)

V1	●
V2	●
V3	●
V4	●
V5	●
V6	●
V7	●
V8	○
V9	○/● Pump In
V10	○/● Pump Out
V11	●
V12	○/● Pump In
V13	●
V14	○/● Pump Out
V15	●
V16	●
V17	●
V18	●
V19	●
V20	●
V21	●
V22	●
V23	●
PP1	□
PP2	□
PP3	■
PP4	■

Caption:
○ denotes an open valve;
● denotes a closed valve;
○/● denotes a valve opening and closing during a pumping sequence;
■ denotes an idle pump station (not in use); and
□ denotes a pump station in use.

After a prescribed volume of buffy coat is conveyed into the buffy coat collection container **376** (as monitored by the weigh scale **246**), normal blood processing conditions are resumed. Overspill conditions causing the movement of the buffy coat into the tube **378** can be induced at prescribed intervals during the process period, until a desired buffy coat volume is collected in the buffy coat collection container.

VI. Another Programmable Blood Processing Circuit

A. Circuit Schematic

As previously mentioned, various configurations for the programmable blood processing circuit **46** are possible. FIG. **5** schematically shows one representative configuration **46**, the programmable features of which have been described. FIG. **34** shows another representative configuration of a blood processing circuit **46'** having comparable programmable features.

Like the circuit **46**, the circuit **46'** includes several pump stations PP(N), which are interconnected by a pattern of fluid flow paths F(N) through an array of in-line valves V(N). The circuit is coupled to the remainder of the blood processing set by ports P(N).

The circuit **46'** includes a programmable network of flow paths F**1** to F**33**. The circuit **46'** includes eleven universal ports P**1** to P**8** and P**11** to P**13** and four universal pump stations PP**1**, PP**2**, PP**3**, and PP**4**. By selective operation of the in-line valves V**1** to V**21** and V**23** to V**25**, any universal port P**1** to P**8** and P**11** to P**13** can be placed in flow communication with any universal pump station PP**1**, PP**2**, PP**3**, and PP**4**. By selective operation of the universal valves, fluid flow can be directed through any universal pump station in a forward

direction or reverse direction between two valves, or an in-out direction through a single valve.

In the illustrated embodiment, the circuit **46'** also includes an isolated flow path (comprising flow paths F**9**, F**23**, F**24**, and F**10**) with two ports P**9** and P**10** and one in-line pump station PP**5**. The flow path is termed "isolated," because it cannot be placed into direct flow communication with any other flow path in the circuit **46'** without exterior tubing. By selective operation of the in-line valves V**21** and V**22**, fluid flow can be directed through the pump station PP**5** in a forward direction or reverse direction between two valves, or an in-out direction through a single valve.

Like circuit **46**, the circuit **46'** can be programmed to assign dedicated pumping functions to the various pump stations. In one embodiment, the universal pump stations PP**3** and PP**4** in tandem serve as a general purpose, donor interface pump, regardless of the particular blood procedure performed. The dual donor interface pump stations PP**3** and PP**4** in the circuit **46'** work in parallel. One pump station draws fluid into its pump chamber, while the other pump station expels fluid from its pump chamber. The pump station PP**3** and PP**4** alternate draw and expel functions.

In one arrangement, the draw cycle for the drawing pump station is timed to be longer than the expel cycle for the expelling pump station. This provides a continuous flow of fluid on the inlet side of the pump stations and a pulsatile flow in the outlet side of the pump stations. In one representative embodiment, the draw cycle is ten seconds, and the expel cycle is one second. The expelling pump station performs its one second cycle at the beginning of the draw cycle of the drawing pump, and then rests for the remaining nine seconds of the draw cycle. The pump stations then switch draw and expel functions. This creates a continuous inlet flow and a pulsatile outlet flow. The provision of two alternating pump stations PP**3** and PP**4** serves to reduce overall processing time, as fluid is continuously conducted into a drawing pump station throughout the procedure.

In this arrangement, the isolated pump station PP**5** of the circuit **46'** serves as a dedicated anticoagulant pump, like pump station PP**4** in the circuit **46**, to draw anticoagulant from a source through the port P**10** and to meter anticoagulant into the blood through port P**9**.

In this arrangement, as in the circuit **46**, the universal pump station PP**1** serves, regardless of the particular blood processing procedure performed, as a dedicated in-process whole blood pump, to convey whole blood into the blood separator. As in the circuit **46**, the dedicated function of the pump station PP**1** frees the donor interface pumps PP**3** and PP**4** from the added function of supplying whole blood to the blood separator. Thus, the in-process whole blood pump PP**1** can maintain a continuous supply of blood to the blood separator, while the donor interface pumps PP**3** and PP**4** operate in tandem to simultaneously draw and return blood to the donor through the single phlebotomy needle. The circuit **46'** thus minimizes processing time.

In this arrangement, as in circuit **46**, the universal pump station PP**2** of the circuit **46'** serves, regardless of the particular blood processing procedure performed, as a plasma pump, to convey plasma from the blood separator. As in the circuit **46**, the ability to dedicate separate pumping functions in the circuit **46'** provides a continuous flow of blood into and out of the separator, as well as to and from the donor.

The circuit **46'** can be programmed to perform all the different procedures described above for the circuit **46**. Depending upon the objectives of the particular blood processing procedure, the circuit **46'** can be programmed to retain all or some of the plasma for storage or fractionation purposes, or to return all or some of the plasma to the donor. The circuit **46'** can be further programmed, depending upon the objectives of the particular blood processing procedure, to retain all or some of the red blood cells for storage, or to return all or some of the red blood cells to the donor. The circuit **46'** can also be programmed, depending upon the objectives of the particular blood processing procedure, to retain all or some of the buffy coat for storage, or to return all or some of the buffy coat to the donor.

In the embodiment illustrated in FIG. **34**, the circuit **46'** forms a part of a universal set **264'**, which is coupled to the ports P**1** to P**13**.

More particularly, a donor tube **266'**, with attached phlebotomy needle **268'** is coupled to the port P**8** of the circuit **46'**. An anticoagulant tube **270'**, coupled to the phlebotomy needle **268'** is coupled to port P**9**. A container **276'** holding anticoagulant is coupled via a tube **274'** to the port P**10**.

A container **280'** holding a red blood cell additive solution is coupled via a tube **278'** to the port P**11**. A container **288'** holding saline is coupled via a tube **284'** to the port P**12**. A storage container **289'** is coupled via a tube **291'** to the port P**13**. An in-line leukocyte depletion filter **293'** is carried by the tube **291'** between the port P**13** and the storage container **289'**. The containers **276'**, **280'**, **288'**, and **289'** can be integrally attached to the ports or can be attached at the time of use through a suitable sterile connection, to thereby maintain a sterile, closed blood processing environment.

Tubes **290'**, **292'**, and **294'** extend to an umbilicus **296'** which is coupled to the processing chamber **18'**. The tubes **290'**, **292'**, and **294** are coupled, respectively, to the ports P**5**, P**6**, and P**7**. The tube **290'** conveys whole blood into the processing chamber **18** under the operation of the in-process pump station PP**1**. The tube **292'** conveys plasma from the processing chamber **18'** under the operation of the plasma pump station PP**2**. The tube **294'** conveys red blood cells from processing chamber **18'**.

A plasma collection container **304'** is coupled by a tube **302'** to the port P**3**. The collection container **304'** is intended, in use, to serve as a reservoir for plasma during processing.

A red blood cell collection container **308'** is coupled by a tube **306'** to the port P**2**. The collection container **308'** is intended, in use, to receive a unit of red blood cells for storage.

A buffy coat collection container **376'** is coupled by a tube **377'** to the port P**4**. The container **376'** is intended, in use, to receive a volume of buffy coat for storage.

A whole blood reservoir **312'** is coupled by a tube **310'** to the port P**1**. The collection container **312'** is intended, in use, to receive whole blood during operation of the donor interface pumps PP**3** and PP**4**, to serve as a reservoir for whole blood during processing. It can also serve to receive a second unit of red blood cells for storage.

B. The Cassette

As FIGS. **35** and **36** show, the programmable fluid circuit **46'** can be implemented as an injection molded, pneumatically controlled cassette **28'**. The cassette **28'** interacts with the pneumatic pump and valve station **30**, as previously described, to provide the same centralized, programmable, integrated platform as the cassette **28**.

FIGS. **35** and **36** show the cassette **28'** in which the fluid circuit **46'** (schematically shown in FIG. **34**) is implemented. As previously described for the cassette **28**, an array of interior wells, cavities, and channels are formed on both the front and back sides **190'** and **192'** of the cassette body **188'**, to define the pump stations PP**1** to PP**5**, valve stations V**1** to V**25**, and flow paths F**1** to F**33** shown schematically in FIG. **34**. In

FIG. **36**, the flow paths F**1** to F**33** are shaded to facilitate their viewing. Flexible diaphragms **194'** and **196'** overlay the front and back sides **190'** and **192'** of the cassette body **188'**, resting against the upstanding peripheral edges surrounding the pump stations PP**1** to PP**5**, valves V**1** to V**25**, and flow paths F**1** to F**33**. The pre-molded ports P**1** to P**13** extend out along two side edges of the cassette body **188'**.

The cassette **28'** is vertically mounted for use in the pump and valve station **30** in the same fashion shown in FIG. **2**. In this orientation (which FIG. **36** shows), the side **192'** faces outward, ports P**8** to P**13** face downward, and the ports P**1** to P**7** are vertically stacked one above the other and face inward.

As previously described, localized application by the pump and valve station **30** of positive and negative fluid pressures upon the diaphragm **194'** serves to flex the diaphragm to close and open the valve stations V**1** to V**25** or to expel and draw liquid out of the pump stations PP**1** to PP**5**.

An additional interior cavity **200'** is provided in the back side **192'** of the cassette body **188'**. The cavity **200'** forms a station that holds a blood filter material to remove clots and cellular aggregations that can form during blood processing. As shown schematically in FIG. **34**, the cavity **200'** is placed in the circuit **46'** between the port P**8** and the donor interface pump stations PP**3** and PP**4**, so that blood returned to the donor passes through the filter. Return blood flow enters the cavity **200'** through flow path F**27** and exits the cavity **200'** through flow path F**8**. The cavity **200'** also serves to trap air in the flow path to and from the donor.

Another interior cavity **201'** (see FIG. **35**) is also provided in the back side **192'** of the cassette body **188'**. The cavity **201'** is placed in the circuit **46'** between the port P**5** and the valve V**16** of the in-process pumping station PP**1**. Blood enters the cavity **201'** from flow path F**16** through opening **203'** and exits the cavity **201'** into flow path F**5** through opening **205'**. The cavity **201'** serves as another air trap within the cassette body **188'** in the flow path serving the separation chamber **18'**. The cavity **201'** also serves as a capacitor to dampen the pulsatile pump strokes of the in-process pump PP**1** serving the separation chamber.

C. Associated Pneumatic Manifold Assembly

FIG. **43** shows a pneumatic manifold assembly **226'** that can be used in association with the cassette **28'**, to supply positive and negative pneumatic pressures to convey fluid through the cassette **28'**. The front side **194'** of the diaphragm is held in intimate engagement against the manifold assembly **226'** when the door **32** of the centrifuge station **20** is closed and the bladder **314** inflated. The manifold assembly **226'**, under the control of the controller **16**, selectively distributes the different pressure and vacuum levels to the pump and valve actuators PA(N) and VA(N) of the cassette **28'**. These levels of pressure and vacuum are systematically applied to the cassette **28'**, to route blood and processing liquids. Under the control of a controller **16**, the manifold assembly **226'** also distributes pressure levels to the door bladder **314** (already described), as well as to a donor pressure cuff (also already described) and to a donor line occluder **320** (also already described). The manifold assembly **226'** for the cassette **28'** shown in FIG. **43** shares many attributes with the manifold assembly **226** previously described for the cassette **28**, as shown in FIG. **12**.

Like the manifold assembly **226**, the manifold assembly **226'** is coupled to a pneumatic pressure source **234'**, which is carried inside the lid **40** behind the manifold assembly **226'**. As in the manifold assembly **226**, the pressure source **234'** for the manifold assembly **226'** comprises two compressors C**1'** and C**2'**, although one or several dual-head compressors could be used as well. Compressor C**1'** supplies negative pressure through the manifold **226'** to the cassette **28'**. The other compressor C**2'** supplies positive pressure through the manifold **226'** to the cassette **28'**.

As FIG. **43** shows, the manifold **226'** contains five pump actuators PA**1** to PA**5** and twenty-five valve actuators VA**1** to VA**25**. The pump actuators PA**1** to PA**5** and the valve actuators VA**1** to VA**25** are mutually oriented to form a mirror image of the pump stations PP**1** to PP**5** and valve stations V**1** to V**25** on the front side **190'** of the cassette **28'**.

Like the manifold assembly **226**, the manifold assembly **226'** shown in FIG. **43** includes an array of solenoid actuated pneumatic valves, which are coupled in-line with the pump and valve actuators PA**1** to PA**5** and VA**1** to VA**25**.

Like the manifold assembly **226**, the manifold assembly **226'** maintains several different pressure and vacuum conditions, under the control of the controller **16**.

As previously described in connection with the manifold assembly **226**, Phard, or Hard Pressure, and Pinpr, or In-Process Pressure are high positive pressures (e.g., +500 mmHg) maintained by the manifold assembly **226'** for closing the cassette valves V**1** to V**25** and to drive the expression of liquid from the in-process pump PP**1** and the plasma pump PP**2**. As before explained, the magnitude of Pinpr must be sufficient to overcome a minimum pressure of approximately 300 mmHg, which is typically present within the processing chamber **18'**. Pinpr and Phard are operated at the highest pressure to ensure that upstream and downstream valves used in conjunction with pumping are not forced open by the pressures applied to operate the pumps.

Pgen, or General Pressure (+300 mmHg), is applied to drive the expression of liquid from the donor interface pumps PP**3** and PP**4** and the anticoagulant pump PP**5**.

Vhard, or Hard Vacuum (−350 mmHg), is the deepest vacuum applied in the manifold assembly **226'** to open cassette valves V**1** to V**25**. Vgen, or General Vacuum (−300 mmHg), is applied to drive the draw function of each of the pumps PP**1** to PP**5**. Vgen is required to be less extreme than Vhard, to ensure that pumps PP**1** to PP**5** do not overwhelm upstream and downstream cassette valves V**1** to V**25**.

A main hard pressure line **322'** and a main vacuum line **324'** distribute Phard and Vhard in the manifold assembly **226'**. The pressure and vacuum sources **234'** run continuously to supply Phard to the hard pressure line **322'** and Vhard to the hard vacuum line **324'**. A pressure sensor S**2** monitors Phard in the hard pressure line **322'**. The sensor S**2** opens and closes the solenois SO**32** to build Phard up to its maximum set value.

Similarly, a pressure sensor S**8** in the hard vacuum line **324'** monitors Vhard. The sensor S**8** controls a solenois SO**43** to maintain Vhard as its maximum value.

A general pressure line **326'** branches from the hard pressure line **322'**. A sensor S**4** in the general pressure line **326'** monitors Pgen. The sensor S**4** controls a solenois SO**34** to maintain Pgen within its specified pressure range.

A general vacuum line **330'** branches from the hard vacuum line **324'**. A sensor S**5** monitors Vgen in the general vacuum line **330'**. The sensor S**5** controls a solenois SO**45** to keep Vgen within its specified vacuum range.

In-line reservoirs R**1** to R**4** are provided in the hard pressure line **322'**, the general pressure line **326'**, the hard vacuum line **324'**, and the general vacuum line **330'**. The reservoirs R**1** to R**4** assure that the constant pressure and vacuum adjustments as above described are smooth and predictable.

The solenoids SO**32** and SO**43** provide a vent for the pressures and vacuums, respectively, upon procedure completion.

Terumo v. Haemonetics - IPR2026-00046
Petitioner Terumo Exhibit 1006-0103

The solenoids SO41, SO42, SO47, and SO48 provide the capability to isolate the reservoirs R1 to R4 from the air lines that supply vacuum and pressure to the pump and valve actuators. This provides for much quicker pressure/vacuum decay feedback, so that testing of cassette/manifold assembly seal integrity can be accomplished.

The solenoids SO1 to SO25 provide Phard or Vhard to drive the valve actuators VA1 to V25. The solenoids SO27 and SO28 provide Pinpr and Vgen to drive the in-process and plasma pumps PP1 and PP2. The solenoids SO30 and SO31 provide Pgen and Vgen to drive the donor interface pumps PP3 and PP4. The solenois SO29 provides Pgen and Vgen to drive the AC pump PP5.

The solenois SO35 provides isolation of the door bladder 314 from the hard pressure line 322' during the procedure. A sensor S1 monitors Pdoor and control the solenois SO35 to keep the pressure within its specified range.

The solenois SO40 provides Phard to open the safety occluder valve 320. Any error modes that might endanger the donor will relax (vent) the solenoid SO40 to close the occluder 320 and isolate the donor. Similarly, any loss of power will relax the solenois SO40 and isolate the donor.

The sensor S3 monitors Pcuff and communicates with solenois SO36 (for increases in pressure) and solenois SO37 (for venting) to maintain the donor cuff within its specified ranges during the procedure.

As before explained, any solenoid can be operated in "normally open" mode or can be re-routed pneumatically to be operated in a "normally closed" mode, and vice versa.

D. Exemplary Pumping Functions

Based upon the foregoing description of the programming of the fluid circuit 46 implemented by the cassette 28, one can likewise program the fluid circuit 46' implemented by the cassette 28' to perform all the various blood process functions already described. Certain pumping functions for the fluid circuit 46', common to various blood processing procedures, will be described by way of example.

1. Whole Blood Flow to the In-Process Container

In a first phase of a given blood collection cycle, the blood processing circuit 46' is programmed (through the selective application of pressure to the valves and pump stations of the cassette 28') to jointly operate the donor interface pumps PP3 and PP4 to transfer anticoagulated whole blood into the in-process container 312' prior to separation.

In a first phase (see FIG. 37A), the pump PP3 is operated in a ten second draw cycle (i.e., in through valves V12 and V13, with valves V6, V14, V18, and V15 closed) in tandem with the anticoagulant pump PP5 (i.e., in through valve V22 and out through valve V21) to draw anticoagulated blood through the donor tube 270' into the pump PP3. At the same time, the donor interface pump PP4 is operated in a one second expel cycle to expel (out through valve V7) anticoagulated blood from its chamber into the in-process container 312' through flow paths F20 and F1 (through opened valve V4).

At the end of the draw cycle for pump PP3 (see FIG. 37B), the blood processing circuit 46' is programmed to operate the donor interface pump PP4 in a ten second draw cycle (i.e., in through valves V12 and V14, with valves V13 and V18 closed) in tandem with the anticoagulant pump PP5 to draw anticoagulated blood through the donor tube 270' into the pump PP4. At the same time, the donor interface pump PP3 is operated in a one second expel cycle to expel (out through valve V6) anticoagulated blood from its chamber into the in-process container 312' through the flow paths F20 and F1 (through opened valve V4).

These alternating cycles continue until an incremental volume of anticoagulated whole blood enters the in-process container 312', as monitored by a weigh sensor. As FIG. 37C shows, the blood processing circuit 46' is programmed to operate the in-process pump station PP1 (i.e., in through valve V1 and out through valve V16) and the plasma pump PP2 (i.e., in through valve V17 and out through valve V11, with valve V9 opened and valve V10 closed) to convey anticoagulated whole blood from the in-process container 312' into the processing chamber 18' for separation, while removing plasma into the plasma container 304' (through opened valve V9) and red blood cells into the red blood cell container 308' (through open valve V2), in the manner previously described with respect to the circuit 46. This phase continues until an incremental volume of plasma is collected in the plasma collection container 304' (as monitored by the weigh sensor) or until a targeted volume of red blood cells is collected in the red blood cell collection container (as monitored by the weigh sensor). The donor interface pumps PP3 and PP4 toggle to perform alternating draw and expel cycles as necessary to keep the volume of anticoagulated whole blood in the in-process container 312' between prescribed minimum and maximum levels, as blood processing proceeds.

2. Red Blood Cell Return with In-Line Addition of Saline

When it is desired to return red blood cells to the donor (see FIG. 37D), the blood processing circuit 46' is programmed to operate the donor interface pump station PP3 in a ten second draw cycle (i.e., in through valve V6, with valves V13 and V7 closed) to draw red blood cells from the red blood cell container 308' into the pump PP3 (through open valves V2, V3, and V5, valve V10 being closed). At the same time, the donor interface pump PP4 is operated in a one second expel cycle to expel (out through valves V14 and V18, with valves V12 and V21 closed) red blood cells from its chamber to the donor through the filter cavity 200'.

At the end of the draw cycle for pump PP3 (see FIG. 37E), the blood processing circuit 46' is programmed to operate the donor interface pump PP4 in ten second draw cycle (i.e., in through valve V7, with valves V6 and V14 closed) to draw red blood cells from the red blood cell container 308' into the pump PP4. At the same time, the donor interface pump PP3 is operated in a one second expel cycle to expel (out through valves V13 and V18, with valve V12 closed) red blood cells from its chamber to the donor through the filter chamber 200'. These alternating cycles continue until a desired volume of red blood cells is returned to the donor.

Simultaneously, valves V24, V20, and V8 are opened, so that the drawing pump station PP3 or PP4 also draws saline from the saline container 288' for mixing with red blood cells drawn into the chamber. As before explained, the in-line mixing of saline with the red blood cells raises the saline temperature and improves donor comfort, while also lowering the hematocrit of the red blood cells.

Simultaneously, the in-process pump PP1 is operated (i.e., in through valve V1 and out through valve V16) and the plasma pump PP2 (i.e., in through valve V17 and out through valve V11, with valve V9 open) to convey anticoagulated whole blood from the in-process container 312' into the processing chamber for separation, while removing plasma into

the plasma container **304'**, in the manner previously described with respect to the fluid circuit **46**.

3. In-Line Addition of Red Blood Cell Additive Solution

In a blood processing procedure where red blood cells are collected for storage (e.g., the Double Red Blood Cell Collection Procedure or the Red Blood Cell and Plasma Collection Procedure) the circuit **46'** is programmed to operate the donor interface pump station PP**3** in a ten second draw cycle (in through valves V**15** and V**13**, with valve V**23** opened and valves V**8**, V**12** and V**18** closed) to draw red blood cell storage solution from the container **280'** into the pump PP**3** (see FIG. **38**A). Simultaneously, the circuit **46'** is programmed to operate the donor interface pump station PP**4** in a one second expel cycle (out through valve V**7**, with valves V**14** and V**18** closed) to expel red blood cell storage solution to the container(s) where red blood cells reside (e.g., the in-process container **312'** (through open valve V**4**) or the red blood cell collection container **308'** (through open valves V**5**, V**3**, and V**2**, with valve V**10** closed)).

At the end of the draw cycle for pump PP**3** (see FIG. **38**B), the blood processing circuit **46'** is programmed to operate the donor interface pump PP**4** in a ten second draw cycle (i.e., in through valve V**14**, with valves V**7**, V**18**, V**12**, and V**13** closed) to draw red blood cell storage solution from the container **280'** into the pump PP**4**. At the same time, the donor interface pump PP**3** is operated in a one second expel cycle to expel (out through valve V**6**, with valves V**13** and V**12** closed) red blood cell storage solution to the container(s) where red blood cells reside. These alternating cycles continue until a desired volume of red blood cell storage solution is added to the red blood cells.

4. In-Line Leukocyte Depletion

Circuit **46'** provides the capability to conduct on-line depletion of leukocytes from collected red blood cells. In this mode (see FIG. **39**A), the circuit **46'** is programmed to operate the donor interface pump station PP**3** in a ten second draw cycle (in through valve V**6**, with valves V**13** and V**12** closed) to draw red blood cells from the container(s) where red blood cells reside (e.g., the in-process container **312'** (through open valve V**4**) or the red blood cell collection container **308'** (through open valves V**5**, V**3**, and V**2**, with valve V**10** closed)) into the pump PP**3**. Simultaneously, the circuit **46'** is programmed to operate the donor interface pump station PP**4** in a one second expel cycle (out through valve V**14**, with valves V**18** and V**8** closed and valves V**15** and V**25** opened) to expel red blood cells through tube **291'** through the in-line leukocyte depletion filter **293'** to the leukocyte-depleted red blood cell storage container **289'**.

At the end of the draw cycle for pump PP**3** (see FIG. **39**B), the blood processing circuit **46'** is programmed to operate the donor interface pump PP**4** in a ten second draw cycle (i.e., in through valve V**7**, with valves V**14** and V**18** closed) to draw red blood cells from the container **312'** or **308'** into the pump PP**4**. At the same time, the donor interface pump PP**3** is operated in a one second expel cycle to expel (out through valve V**13**, with valve V**12** closed and valves V**15** and V**25** opened) red blood cells through tube **291'** through the in-line leukocyte depletion filter **293'** to the leukocyte-depleted red blood cell storage container **289'**. These alternating cycles continue until a desired volume of red blood cells is transferred through the filter **293'** into the container **289'**.

5. Staged Buffy Coat Harvesting

In circuit **46** (see FIG. **5**), buffy coat is collected through port P**4**, which is served by flow line F**4**, which branches from flow line F**28**, which conveys plasma from the plasma pump station PP**2** to the plasma collection container **304** (also see FIG. **10**). In the circuit **46'** (see FIG. **34**), the buffy coat is collected through the port P**4** from the flow path F**6** as controlled by valve V**19**. The buffy coat collection path bypasses the plasma pump station PP**2**, keeping the plasma pump station PP**2** free of exposure to the buffy coat, thereby keeping the collected plasma free of contamination by the buffy coat components.

During separation, the system controller (already described) maintains the buffy coat layer within the separation chamber **18'** at a distance spaced from the low-G wall, away from the plasma collection line **292** (see FIG. **15**A). This allows the buffy coat component to accumulate during processing as plasma is conveyed by operation of the plasma pump PP**2** from the chamber into the plasma collection container **304'**.

To collect the accumulated buffy coat component, the controller opens the buffy coat collection valve V**19**, and closes the inlet valve V**17** of the plasma pump station PP**2** and the red blood cell collection valve V**2**. The in-process pump PP**1** continues to operate, bringing whole blood into the chamber **18'**. The flow of whole blood into the chamber **18'** moves the buffy coat to the low-G wall, inducing an overspill condition (see FIG. **15**B). The buffy coat component enters the plasma collection line **292'** and enters flow path F**6** through the port P**6**. The circuit **46'** conveys the buffy coat component in F**6** through the opened valve V**19** directly into path F**4** for passage through the port P**4** into the collection container **376'**.

The valve V**19** is closed when the sensing station **332** senses the presence of red blood cells. The plasma pumping station PP**2** can be temporarily operated in a reverse flow direction (in through the valve V**11** and out through the valve V**17**, with valve V**9** opened) to flow plasma from the collection container **304'** through the tube **292'** toward the separation chamber, to flush resident red blood from the tube **292'** back into the separation chamber. The controller can resume normal plasma and red blood cell collection, by opening the red blood cell collection valve V**2** and operating the plasma pumping station PP**2** (in through valve V**17** and out through valve V**11**) to resume the conveyance of plasma from the separation chamber to the collection container **304'**.

Overspill conditions causing the movement of the buffy coat for collection can be induced at prescribed intervals during the process period, until a desired buffy coat volume is collected in the buffy coat collection container.

6. Miscellaneous

As FIG. **43** shows in phantom lines, the manifold assembly **226'** can include an auxiliary pneumatic actuator A_{AUX} to selectively apply P_{HARD} to the region of the flexible diaphragm that overlies the interior cavity **201'** (see FIG. **35**). As previously described, whole blood expelled by the pumping station PP**1** (by application of P_{HARD} by actuator PA**1**), enters flow path F**5** through openings **203'** and **205'** into the processing chamber **18'**. During the next subsequent stroke of the pumping station PP**1**, to draw whole blood into the pumping station PP**1** by application of V_{GEN} by actuator PA**1**, residual whole blood residing in the cavity **201'** is expelled into flow path F**5** through opening **205'**, and into the processing chamber **18'** by application of P_{HARD} by A_{AUX}. The cavity **201'** also

serves as a capacitor to dampen the pulsatile pump strokes of the in-process pump PP**1** serving the separation chamber **18'**.

It is desirable to conduct seal integrity testing of the cassette **28'** shown in FIGS. **35** and **36** prior to use. The integrity test determines that the pump and valve stations within the cassette **28'** function without leaking. In this situation, it is desirable to isolate the cassette **28'** from the separation chamber **18'**. Valves V**16** and V**17** (see FIG. **34**) in circuit **264'** provide isolation for the whole blood inlet and plasma lines **290'** and **292'** of the chamber **18'**. To provide the capability of also isolating the red blood cell line **294'**, an extra valve fluid actuated station V**26** can be added in fluid flow path F**7** serving port P**7**. As further shown in phantom lines in FIG. **43**, an addition valve actuator VA**26** can be added to the manifold assembly **226'**, to apply positive pressure to the valve V**26**, to close the valve V**26** when isolation is required, and to apply negative pressure to the valve V**26**, to open the valve when isolation is not required.

VII. Blood Separation Elements

A. Molded Processing Chamber

FIGS. **21** to **23** show an embodiment of the centrifugal processing chamber **18**, which can be used in association with the system **10** shown in FIG. **1**.

In the illustrated embodiment, the processing chamber **18** is preformed in a desired shape and configuration, e.g., by injection molding, from a rigid, biocompatible plastic material, such as a non-plasticized medical grade acrylonitrile-butadiene-styrene (ABS).

The preformed configuration of the chamber **18** includes a unitary, molded base **388**. The base **388** includes a center hub **120**. The hub **120** is surrounded radially by inside and outside annular walls **122** and **124** (see FIGS. **21** and **23**). Between them, the inside and outside annular walls **122** and **124** define a circumferential blood separation channel **126**. A molded annular wall **148** closes the bottom of the channel **126** (see FIG. **22**).

The top of the channel **126** is closed by a separately molded, flat lid **150** (which is shown separated in FIG. **21** for the purpose of illustration). During assembly, the lid **150** is secured to the top of the chamber **18**, e.g., by use of a cylindrical sonic welding horn.

All contours, ports, channels, and walls that affect the blood separation process are preformed in the base **388** in a single, injection molded operation. Alternatively, the base **388** can be formed by separate molded parts, either by nesting cup shaped subassemblies or two symmetric halves.

The lid **150** comprises a simple flat part that can be easily welded to the base **388**. Because all features that affect the separation process are incorporated into one injection molded component, any tolerance differences between the base **388** and the lid **150** will not affect the separation efficiencies of the chamber **18**.

The contours, ports, channels, and walls that are preformed in the base **388** can vary. In the embodiment shown in FIGS. **21** to **23**, circumferentially spaced pairs of stiffening walls **128**, **130**, and **132** emanate from the hub **120** to the inside annular wall **122**. The stiffening walls **128**, **130**, **132** provide rigidity to the chamber **18**.

As seen in FIG. **23**, the inside annular wall **122** is open between one pair **130** of the stiffening walls. The opposing stiffening walls form an open interior region **134** in the hub **120**, which communicates with the channel **126**. Blood and fluids are introduced from the umbilicus **296** into and out of the separation channel **126** through this region **134**.

In this embodiment (as FIG. **23** shows), a molded interior wall **136** formed inside the region **134** extends entirely across the channel **126**, joining the outside annular wall **124**. The wall **136** forms a terminus in the separation channel **126**, which interrupts flow circumferentially along the channel **126** during separation.

Additional molded interior walls divide the region **134** into three passages **142**, **144**, and **146**. The passages **142**, **144**, and **146** extend from the hub **120** and communicate with the channel **126** on opposite sides of the terminus wall **136**. Blood and other fluids are directed from the hub **120** into and out of the channel **126** through these passages **142**, **144**, and **146**. As will be explained in greater detail later, the passages **142**, **144**, and **146** can direct blood components into and out of the channel **126** in various flow patterns.

The underside of the base **388** (see FIG. **22**) includes a shaped receptacle **179**. Three preformed nipples **180** occupy the receptacle **179**. Each nipple **180** leads to one of the passages **142**, **144**, **146** on the opposite side of the base **388**.

The far end of the umbilicus **296** includes a shaped mount **178** (see FIGS. **24** and **24**A). The mount **178** is shaped to correspond to the shape of the receptacle **179**. The mount **178** can thus be plugged into the receptacle **179** (as FIG. **25** shows). The mount **178** includes interior lumens **398** (see FIG. **24**A), which slide over the nipples **180** in the hub **120**, to couple the umbilicus **296** in fluid communication with the channel **126**.

Ribs **181** within the receptacle **179** (see FIG. **22**) uniquely fit within a key way **183** formed on the mount **178** (see FIG. **24**A). The unique fit between the ribs **181** and the key way **183** is arranged to require a particular orientation for plugging the shaped mount **178** into the shaped receptacle **179**. In this way, a desired flow orientation among the umbilicus **296** and the passages **142**, **144**, and **146** is assured.

In the illustrated embodiment, the umbilicus **296** and mount **178** are formed from a material or materials that withstand the considerable flexing and twisting forces, to which the umbilicus **296** is subjected during use. For example, a Hytrel® polyester material can be used.

This material, while well suited for the umbilicus **296**, is not compatible with the ABS plastic material of the base **388**, which is selected to provide a rigid, molded blood processing environment. The mount **178** thus cannot be attached by conventional solvent bonding or ultrasonic welding techniques to the receptacle **179**.

In this arrangement (see FIGS. **24** and **25**), the dimensions of the shaped receptacle **179** and the shaped mount **178** may be selected to provide a tight, dry press fit. In addition, a capturing piece **185**, formed of ABS material (or another material compatible with the material of the base **388**), may be placed about the umbilicus **296** outside the receptacle in contact with the peripheral edges of the receptacle **179**. The capturing piece **185** is secured to the peripheral edges of the receptacle **179**, e.g., by swaging or ultrasonic welding techniques. The capturing piece **185** prevents inadvertent separation of the mount **178** from the receptacle **179**. In this way, the umbilicus **296** can be integrally connected to the base **388** of the chamber **18**, even though incompatible plastic materials are used.

The centrifuge station **20** (see FIGS. **26** to **28**) includes a centrifuge assembly **48**. The centrifuge assembly **48** is constructed to receive and support the molded processing chamber **18** for use.

As illustrated, the centrifuge assembly **48** includes a yoke **154** having bottom, top, and side walls **156**, **158**, **160**. The yoke **154** spins on a bearing element **162** attached to the bottom wall **156**. An electric drive motor **164** is coupled via an

axle to the bottom wall **156** of the yoke **154**, to rotate the yoke **154** about an axis **64**. In the illustrated embodiment, the axis **64** is tilted about fifteen degrees above the horizontal plane of the base **38**, although other angular orientations can be used.

A rotor plate **166** spins within the yoke **154** about its own bearing element **168**, which is attached to the top wall **158** of the yoke **154**. The rotor plate **166** spins about an axis that is generally aligned with the axis of rotation **64** of the yoke **154**.

The top of the processing chamber **18** includes an annular lip **380**, to which the lid **150** is secured. Gripping tabs **382** carried on the periphery of the rotor plate **166** make snap-fit engagement with the lip **380**, to secure the processing chamber **18** on the rotor plate **166** for rotation.

A sheath **182** on the near end of the umbilicus **296** fits into a bracket **184** in the centrifuge station **20**. The bracket **184** holds the near end of the umbilicus **296** in a non-rotating stationary position aligned with the mutually aligned rotational axes **64** of the yoke **154** and rotor plate **166**.

An arm **186** protruding from either or both side walls **160** of the yoke **154** contacts the mid portion of the umbilicus **296** during rotation of the yoke **154**. Constrained by the bracket **184** at its near end and the chamber **18** at its far end (where the mount **178** is secured inside the receptacle **179**), the umbilicus **296** twists about its own axis as it rotates about the yoke axis **64**. The twirling of the umbilicus **296** about its axis as it rotates at one omega with the yoke **154** imparts a two omega rotation to the rotor plate **166**, and thus to the processing chamber **18** itself.

The relative rotation of the yoke **154** at a one omega rotational speed and the rotor plate **166** at a two omega rotational speed, keeps the umbilicus **296** untwisted, avoiding the need for rotating seals. The illustrated arrangement also allows a single drive motor **164** to impart rotation, through the umbilicus **296**, to the mutually rotating yoke **154** and rotor plate **166**. Further details of this arrangement are disclosed in Brown et al U.S. Pat. No. 4,120,449, which is hereby incorporated herein by reference.

Blood is introduced into and separated within the processing chamber **18** as it rotates.

In one flow arrangement (see FIG. **29**), as the processing chamber **18** rotates (arrow R in FIG. **29**), the umbilicus **296** conveys whole blood into the channel **126** through the passage **146**. The whole blood flows in the channel **126** in the same direction as rotation (which is counterclockwise in FIG. **29**). Alternatively, the chamber **18** can be rotated in a direction opposite to the circumferential flow of whole blood, i.e., clockwise. The whole blood separates as a result of centrifugal forces in the manner shown in FIG. **15**A. Red blood cells are driven toward the high-G wall **124**, while lighter plasma constituent is displaced toward the low-G wall **122**.

In this flow pattern, a dam **384** projects into the channel **126** toward the high-G wall **124**. The dam **384** prevents passage of plasma, while allowing passage of red blood cells into a channel **386** recessed in the high-G wall **124**. The channel **386** directs the red blood cells into the umbilicus **296** through the radial passage **144**. The plasma constituent is conveyed from the channel **126** through the radial passage **142** into umbilicus **296**.

Because the red blood cell exit channel **386** extends outside the high-g wall **124**, being spaced further from the rotational axis than the high-g wall, the red blood cell exit channel **386** allows the positioning of the interface between the red blood cells and the buffy coat very close to the high-g wall **124** during blood processing, without spilling the buffy coat into the red blood cell collection passage **144** (creating an underspill condition). The recessed exit channel **386** thereby permits red blood cell yields to be maximized (in a red blood cell collection procedure) or an essentially platelet-free plasma to be collected (in a plasma collection procedure).

In an alternative flow arrangement (see FIG. **30**), the umbilicus **296** conveys whole blood into the channel **126** through the passage **142**. The processing chamber **18** rotates (arrow R in FIG. **30**) in the same direction as whole blood flow (which is clockwise in FIG. **30**). Alternatively, the chamber **18** can be rotated in a direction opposite to the circumferential flow of whole blood, i.e., clockwise. The whole blood separates as a result of centrifugal forces in the manner shown in FIG. **15**A. Red blood cells are driven toward the high-G wall **124**, while lighter plasma constituent is displaced toward the low-G wall **122**.

In this flow pattern, the dam **384** (previously described) prevents passage of plasma, while allowing passage of red blood cells into the recessed channel **386**. The channel **386** directs the red blood cells into the umbilicus **296** through the radial passage **144**. The plasma constituent is conveyed from the opposite end of the channel **126** through the radial passage **146** into umbilicus **296**.

In another alternative flow arrangement (see FIG. **31**), the umbilicus **296** conveys whole blood into the channel **126** through the passage **144**. The processing chamber **18** is rotated (arrow R in FIG. **31**) in the same direction as blood flow (which is clockwise in FIG. **31**). Alternatively, the chamber **18** can be rotated in a direction opposite to the circumferential flow of whole blood, i.e., counterclockwise. The whole blood separates as a result of centrifugal forces in the manner shown in FIG. **15**A. Red blood cells are driven toward the high-G wall **124**, while lighter plasma constituent is displaced toward the low-G wall **122**.

In this flow pattern, a dam **385** at the opposite end of the channel **126** prevents passage of plasma, while allowing passage of red blood cells into a recessed channel **387**. The channel **387** directs the red blood cells into the umbilicus **296** through the radial passage **146**. The plasma constituent is conveyed from the other end of the channel **126** through the radial passage **142** into umbilicus **296**. In this arrangement, the presence of the dam **384** and the recessed passage **386** (previously described) separates incoming whole blood flow (in passageway **144**) from outgoing plasma flow (in passageway **142**). This flow arrangement makes possible the collection of platelet-rich plasma, if desired.

In another alternative flow arrangement (see FIG. **32**), the passage **144** extends from the hub **120** into the channel **126** in a direction different than the passages **142** and **146**. In this arrangement, the terminus wall **136** separates the passages **142** and **146**, and the passage **144** communicates with the channel **126** at a location that lays between the passages **142** and **146**. In this arrangement, the umbilicus **296** conveys whole blood into the channel **126** through the passage **146**. The processing chamber **18** is rotated (arrow R in FIG. **32**) in the same direction as blood flow (which is clockwise in FIG. **32**). Alternatively, the chamber **18** can be rotated in a direction opposite to the circumferential flow of whole blood, i.e., counterclockwise. The whole blood separates as a result of centrifugal forces in the manner shown in FIG. **15**A. Red blood cells are driven toward the high-G wall **124**, while lighter plasma constituent is displaced toward the low-G wall **122**.

In this flow pattern, the passage **144** conveys plasma from the channel **126**, while the passage **142** conveys red blood cells from the channel **126**.

As previously mentioned, in any of the flow patterns shown in FIGS. **28** to **32**, the chamber **18** can be rotated in the same direction or in an opposite direction to circumferential flow of whole blood in the channel **126**. Blood separation as

described will occur in either circumstance. Nevertheless, it has been discovered that, rotating the chamber **18** in the same direction as the flow of whole blood in the channel **126** during separation, appears to minimize disturbances, e.g., Coriolis effects, resulting in increased separation efficiencies.

EXAMPLE

Whole blood was separated during various experiments into red blood cells and plasma in processing chambers **18** like that shown in FIG. **28**. In one chamber (which will be called Chamber **1**), whole blood circumferentially flowed in the channel **126** in the same direction as the chamber **18** was rotated (i.e., the chamber **18** was rotated in a counterclockwise direction). In the other chamber **18** (which will be called Chamber **2**), whole blood circumferentially flowed in the channel **126** in a direction opposite to chamber rotation (i.e., the chamber **18** was rotated in a clockwise direction). The average hematocrit for red blood cells collected were measured for various blood volume samples, processed at different combinations of whole blood inlet flow rates and plasma outlet flow rates. The following Tables summarize the results for the various experiments.

TABLE 1

(Flow in the Same Direction as Rotation)

Number of Blood Samples Processed	Average Whole Blood Hematocrit (%)	Average Hematocrit of Red Blood Cells Collected
7	45.4	74.8
4	40	78.8

TABLE 2

(Flow in the Opposite Direction as Rotation)

Number of Blood Samples Processed	Average Whole Blood Hematocrit (%)	Average Hematocrit of Red Blood Cells Collected
3	43.5	55.5
2	42.25	58.25

Tables 1 and 2 show that, when blood flow in the chamber is in the same direction as rotation, the hematocrit of red blood cells is greater than when blood flow is in the opposite direction. A greater yield of red blood cells also means a greater yield of plasma during the procedure.

B. Alternative Molded Processing Chamber

FIG. **33** shows a chamber **18'** having a unitary molded base **388'** like that shown in FIGS. **21** to **23**, but in which two flow paths **126'** and **390** are formed. The flow paths **126'** and **390** are shown to be concentric, but they need not be. The chamber **18'** shares many other structural features in common with the chamber **18** shown in FIG. **23**. Common structural features are identified by the same reference number marked with an apostrophe.

The base **388'** includes a center hub **120'** which is surrounded radially by the inside and outside annular walls **122'** and **124'**, defining between them the circumferential blood separation channel **126'**. In this embodiment, a second inside annular wall **392** radially surrounds the hub **120'**. The second circumferential blood separation channel **390** is defined between the inside annular walls **122'** and **392**. This construction forms the concentric outside and inside separation channels **126'** and **390**.

An interruption **394** in the annular wall **122'** adjacent to the dam **384'** establishes flow communication between the outside channel **126'** and the inside channel **390**. An interior wall **396** blocks flow communication between the channels **126'** and **390** at their opposite ends.

As the processing chamber **18'** rotates (arrow R in FIG. **33**), the umbilicus **296** conveys whole blood into the outside channel **126'** through the passage **144'**. The whole blood flows in the channel **126'** in the same direction as rotation (which is counterclockwise in FIG. **33**). Alternatively, the chamber **18'** can be rotated in a direction opposite to the circumferential flow of whole blood, i.e., clockwise. The whole blood separates in the outside channel **126'** as a result of centrifugal forces in the manner shown in FIG. **15**A. Red blood cells are driven toward the high-G wall **124'**, while lighter plasma constituent is displaced toward the low-G wall **122'**.

As previously described, the dam **384'** prevents passage of plasma, while allowing passage of red blood cells into a channel **386'** recessed in the high-G wall **124'**. The channel **386'** directs the red blood cells into the umbilicus **296** through the radial passage **142'**. The plasma constituent is conveyed from the channel **126'** through the interruption **394** into the inside separation channel **390**.

The plasma flows circumferentially through the inside channel **390** in a direction opposite to the whole blood in the outside channel **126'**. Platelets remaining in the plasma migrate in response to centrifugal forces against the annular wall **124'**. The channel **390** directs the plasma constituent to the same end of the chamber **18'** where whole blood is initially introduced. The plasma constituent is conveyed from the channel **390** by the passage **146'**.

C. Another Alternative Molded Processing Chamber

FIGS. **44-46** illustrate a further embodiment of a chamber, which is generally indicated at **500** having radially spaced apart inner (low-g) and outer (high-g) side wall portions **502** and **504**, respectively, a bottom or first end wall portion **506**, and a cover or second end wall portion (not illustrated). The wall portions **502** and **504**, the bottom **506**, and the cover together define an enclosed, generally annular channel **508**.

A (whole blood) inlet **510** communicating with the channel **508** is defined between opposing interior radial walls **512** and **514**. One of the interior walls **512** joins the outer (high-g) wall portion and separates the upstream and downstream ends of the channel **508**. The interior walls **512** and **514** define the inlet passageway **510** of the chamber **500** which, in one flow configuration, allows fluid to enter the upstream end of the channel **508** at a location which is adjacent the outer or high-g side wall portion **504**.

A dam or barrier **516** is formed at a downstream end of the channel **508** and has upstream and downstream sides **518** and **520** (FIG. **44**). The barrier **516** extends from the outer side wall portion **504** radially inward to a location which is spaced from the inner side wall portion **502**. The barrier **516** will be described in further detail below.

In the embodiment of FIG. **45**, the barrier **516** extends for the entire axial height of the channel **508**, except for an underpass **522** located at an intermediate axial position spaced below the top of the channel and above, but adjacent to, the bottom **506** of the chamber **500**. The underpass **522** is positioned in the channel **508** and defines an opening or passageway through or below the barrier **516**, thereby allowing for communication between the upstream and the downstream sides **518** and **520** of the barrier **516**. The underpass **522**, and particularly the underpass inlet and outlet openings, are preferably located near or in the proximity of the high-g

side wall portion **504**, where higher density cell components, such as red cells, may accumulate under centrifugal force. More specifically, the high-g side wall portion **504** has a radially outward indent or recess on either side of the barrier **516**. As seen in FIG. **44**, sections **524** and **526** of the outer side wall portion **504** just upstream and downstream of the barrier **516** extend radially outward from (i.e., are located at a greater radial distance than) a more upstream section of the outer side wall portion **504**. An outer radial surface of the underpass **522** may be formed in part by one or more of these radially outward sections **524** and **526** of the outer side wall portion **504** (which sections **524** and **526** are shown removed in FIG. **45**). An opposed inner radial surface of the underpass **522** (visible in FIG. **45** beneath the barrier **116**) may be formed at a radial location which is approximate to that of the outer or high-G wall portion **504**.

A second flow path, referred to herein as a low-g flow path and generally indicated at **528**, also communicates between the upstream and downstream sides **518** and **520** of the barrier **516**. As shown in FIG. **44**, the low-g flow path **528** is distinguishable from the underpass **522** for a number of reasons. For one, the low-g flow path **528** is defined between the barrier **516** and the inner side wall portion **502**, allowing for fluid flow around, rather than through or below the barrier **516**. It will be seen that the low-g flow path **528** is positioned at a more radially inward location than the underpass **522**, making the low-g flow path **528** suitable for accommodating flow of a less dense fluid component, such as plasma, that may accumulate along the inner side wall portion **502**, as will be described in greater detail herein. Further, the illustrated low-g flow path **528** is positioned adjacent to the top of the channel **508**, with a bottom or lower axial surface of the low-g flow path **528** being defined by an intermediate end wall portion **532**, in contrast to the underpass **522**, which is positioned adjacent to the bottom **506** of the chamber **500** (FIG. **45**).

As shown in FIG. **44**, the low-g flow path **528** may include both non-radial and radial portions or legs **534** and **536**, respectively, giving the low-g flow path **528** a generally L-shaped configuration. In the illustrated embodiment, the non-radial or annular portion or leg **534** is defined by the space between the inner side wall portion **502** and a radially inward surface of the barrier **516**. The illustrated radial portion or leg **536** is defined by the downstream side **520** of the barrier **516** and an interior radial wall extension **538**. The interior radial wall extension **538** of FIGS. **44** and **45** terminates at an outer edge **540** which is located at an intermediate radial location between the inner and outer side wall portions **502** and **504**.

The chamber **500** further includes first and second outlets **542** and **544**, respectively, which may be defined by opposing surfaces of interior radial walls. The first (plasma) outlet **542** communicates with the channel **508** upstream of the barrier **516**. The second (red blood cell) outlet **544** communicates with the channel **508** downstream of the barrier **516**. Both the first and second outlets **542** and **544** extend radially inward from the channel **508**. The first outlet **542** extends radially inward from an opening **546** which, in the illustrated embodiment, is located at the inner side wall portion **502**. The second outlet **544** extends radially inward from an opening **548** that communicates with the downstream side of the barrier **516**. In one embodiment, the opening **546** of the first outlet **542** is disposed at approximately a 45 degree angle relative to the opening **548** of the second outlet **544**, although other angles and orientations are also possible.

FIG. **46** shows the relative positions of a radially innermost layer **550**, a radially outermost layer **552**, and a radially intermediate or interface layer **554** during a typical procedure when the chamber **500** is used to fractionate an amount of blood. The radially innermost layer **550** is positioned adjacent to the inner (low-g) wall portion **502** and, in one embodiment, will be substantially comprised of plasma. The radially outermost layer **552** is positioned adjacent to the outer (high-g) wall portion **504** and, in one embodiment, will be substantially comprised of red blood cells. The interface layer **554** is located radially intermediate the other layers **550** and **552** and, in one embodiment, will be substantially comprised of white blood cells and platelets.

The constitution of the various layers illustrated in FIG. **46** may vary according to the particular procedure. For example, when the chamber **500** is spun at a relatively high speed the radially innermost layer **550** will comprise substantially cell-free plasma, whereas the innermost layer **550** will instead comprise a mixture of plasma and platelets (referred to herein as a "plasma/platelet layer") when a slower spin speed is employed. In other procedures, the radially innermost layer **550** may also contain an amount of anticoagulant, white blood cells, and/or a non-plasma platelet storage solution.

Regardless of the exact composition of the various layers, the radially outermost layer **552** will flow through the underpass **522** (FIG. **45**) to the downstream side **520** of the barrier **516** and into the opening **548** of the second outlet **544**, where it exits the channel **508** (FIG. **46**). A portion of the radially innermost layer **550** will enter the opening **546** of the first outlet **542** and exit the channel **508** therethrough, upstream (approximately 40-45°) of the barrier **516**. Another portion of the radially innermost layer **550** will flow past the opening **546** and into the low-g flow path **528**, but is prevented from flowing into the opening **548** of the second outlet **544** by the presence of the denser outermost layer **552** on the downstream side **520** of the barrier **516**. As for the interface layer **554**, it will engage against the upstream side of the barrier **516** and accumulate without exiting the channel **508**.

VIII. Red Blood Cell/Platelet/Plasma Collection

The processing chamber **500** of FIGS. **44-46** is particularly well-suited for use in a procedure for collecting red blood cells, platelets, and plasma individually or in combination with other components from a blood source, and reference will be made thereto for illustrative purposes, however the procedure which follows is not limited to any particular processing chamber.

Disposable sets **556** and **558** (FIGS. **47** and **48**) may be used in the red blood cell/platelet/plasma collection procedure which follows. Except where noted otherwise, the individual components of the disposable sets are well-known to those having skill in the art and are essentially as described above with regard to the processing set of FIG. **10**.

In one embodiment, the disposable set **556** includes a vascular access member **560**, such as a needle, an anticoagulant container **562**, a red blood cell additive solution container **564**, and a saline container **566**. The disposable set **556** further includes tubing **568** leading to a connection device **570** (e.g., a spike in FIG. **47** or a luer connector in FIG. **48**) for connection to a platelet storage solution container (not illustrated), if platelet storage solution is to be used. The illustrated tubing **568** includes an in-line sterility filter **572** of the type employed in a sub-micron filter, such as a 0.22 μm pore membrane filter, to prevent the passage of viruses or larger microbes, thereby preventing contamination and maintaining an effectively closed system. The disposable set **556** also includes a platelet collection container **574**, a plasma collection container **576**, and a red blood cell collection container

578 for collecting the blood components that are separated by the chamber 500. The platelet collection container 574 is illustrated with an associated in-line leukoreduction filter 580, a gas exhaust or air burp bag 582 for removing an amount of gas from the collected platelets (as will be described in greater detail herein), and a sampling pack 584 for segregating an amount of the separated platelets for subsequent testing and/or tracking purposes according to known practice. A red blood cell storage container 586, including segmented tubing 588 (for segregating an amount of the separated red blood cells for subsequent testing and/or tracking purposes) and an in-line leukoreduction filter 590, is also included for post-separation storage of the red blood cells, as will be described in greater detail herein.

The various components of the disposable set 556 are connected via tubing to a cassette 592, which is shown in greater detail in FIGS. 49 and 50. It will be seen that the illustrated cassette 592 has fourteen ports PO1-PO14, in contrast to the 13-port cassettes 28 and 28' illustrated in FIGS. 6-9 and 35-36 (respectively) and described with reference to the foregoing blood component collection procedures. The 14-port cassette 592 operates generally according to the foregoing description of the 13-port cassettes 28 and 28', except that it includes a total of twenty-six valves VAL1-VAL26 to allow for an additional port PO14 to communicate with other ports. To accommodate the twenty-six valves, the corresponding manifold assembly (not illustrated) includes twenty-six valve actuators, similar to the manifold assembly 226' of FIG. 43 and works generally according to the foregoing description of the manifold assembly 226'.

More particularly, the cassette 592 includes ports PO1-PO14, each associated with a component of the disposable set via a length of tubing. Those having skill in the art will appreciate that each port may be associated with a variety of components and tasks, but in the illustrated embodiment, the first port PO1 is associated with the in-process container 594. The second port PO2 is associated with the red blood cell collection container 578. The third port PO3 is associated with the plasma collection container 576. The fourth port PO4 is associated with the platelet collection container 574. The fifth port PO5 is associated with the (whole blood) inlet 510 of the chamber 500. The sixth port PO6 is associated with the first (plasma) outlet 542 of the chamber 500. The seventh port PO7 is associated with the second (red blood cell) outlet 544 of the chamber 500. The eighth port PO8 is associated with the vascular access member 560. The ninth port PO9 is associated with the tubing 596 leading to a y-connector 598 for adding anticoagulant to whole blood from the blood source. The tenth port PO10 is associated with the anticoagulant container 562. The eleventh port PO11 is associated with the platelet additive solution container (not illustrated). The twelfth port PO12 is associated with the red blood cell additive solution container 564. The thirteenth port PO13 is associated with the saline container 566. The fourteenth port PO14 is associated with the red blood cell storage container 586.

The various ports are fluidly connected to each other by flow paths defined by the cassette 592, which flow paths are regulated by valves VAL1-VAL26. The flow paths and other cavities defined by the raised cassette walls are shown with stippling in FIG. 50 to distinguish them from the walls. The location of the valves within the cassette 592 is best illustrated in FIG. 49, while the function of each valve can be understood with reference to FIG. 51, which is a schematic view of the blood processing circuit 600 defined by the flow paths of the cassette 592.

In addition to defining a plurality of flow paths and valves, the cassette 592 further defines a plurality of pumps PU1-PU5 and a filter cavity 602. The pumps and filter cavity correspond generally to those described above with regard to the cassette 28' of FIGS. 35-36. More particularly, the first pump PU1 is an in-process pump, the second pump PU2 is a plasma pump, the third and fourth pumps PU3 and PU4 are donor pumps, and the fifth pump PU5 is an anticoagulant pump. The filter cavity 602 forms a station that may hold a blood filter material to remove clots and cellular aggregations that can form during blood processing.

As for the disposable set 558 of FIG. 48, it is similar to the disposable set 556 of FIG. 47, with the exception that the saline container is omitted and replaced by a container access member, such as the illustrated spike 604 and an in-line sterility filter 606. The spike 604 may be provided according to known design, being generally hollow with a sharpened tip suited for piercing a port or membrane of a separate saline container to fluidly connect the container to the disposable set 558. As for the filter 606, it may be of the type employed in a sub-micron filter to prevent the passage of viruses or larger microbes, thereby preventing contamination and maintaining an effectively closed system during association of a saline container with the disposable set 558. Other disposable sets may also be employed without departing from the scope of the present disclosure.

A. Pre-Processing

Prior to processing, an operator selects the "RBC/Platelet/Plasma" protocol from a touch screen display or other user interface system. If the blood source is a donor, the operator then proceeds to enter various parameters, such as the donor gender/height/weight. In one embodiment, the operator also enters the target yield for the various blood components. In an exemplary procedure, the pre-selected yields are one unit each of single dose platelets, packed red cells, and platelet poor plasma. As will be described in greater detail herein, an amount of plasma may be used to harvest platelets and packed red cells from the chamber and act as a platelet storage fluid, so it may be advantageous to specify an additional amount of plasma (e.g., approximately 335 ml extra-300 ml to harvest and store the platelets and 35 ml to harvest the packed red cells) to ensure that one unit remains in the plasma collection container after the platelets and packed red cells have been harvested.

The operator also selects the collection control system, which may be based on, for example: (1) the amount of whole blood to process, (2) a donor platelet pre-count (i.e., the amount of platelets in a pre-donation sample of the donor's blood) and the target platelet yield, or (3) the target platelet yield. The third option is used when a donor platelet pre-count is not available and implicates use of an online estimator, whereby a volume of whole blood is processed and optical measurements are taken to estimate the platelet pre-count and/or the amount of whole blood that must be processed to achieve the target platelet yield. The online estimator will be described in greater detail herein.

Further, before processing begins, any separate containers (e.g., a platelet storage solution container) are connected to the disposable set, the disposable set is secured to the blood processing system (e.g., a blood processing system according to the foregoing description of system 10), an integrity check of the disposable set is performed to ensure the various components are properly connected and functioning, the blood source is connected to the disposable set (e.g., by phlebotomizing a donor), and the chamber 500 is primed by saline

pumped from the saline container **564** by operation of one or more pumps of the cassette **592**.

B. Draw Stage

Blood is drawn from a blood source and into the disposable set by a two-phase process that is illustrated in FIGS. **52**A and **52**B._Before the blood enters the cassette **592** in either of the phases, an amount of anticoagulant is added to it. Anticoagulant is pumped from the anticoagulant container **562** (which is connected via tubing to port PO**10** of the cassette **592**), through the cassette flow circuit **600**, and out port PO**9** of the cassette **592** by operation of the anticoagulant pump PU**5**. The anticoagulant travels through the tubing **596** connected to the port PO**9** and exits through the y-connector **598**, where it mixes with blood flowing from the blood source into the cassette **592** via port PO**8**.

FIG. **52**A schematically illustrates the path through the cassette **592** taken by anticoagulated whole blood being pumped from the blood source (which is connected via tubing to port PO**8** of the cassette **592**), through the cassette flow circuit **600**, and directly into the chamber **500** (which is connected via tubing to port PO**5** of the cassette **592**). The donor pumps PU**3**/PU**3** cooperate with the in-process pump PU**1** to flow the blood through the cassette flow circuit **600** in this first phase.

In the phase illustrated in FIG. **52**B, anticoagulated blood is pumped from the blood source, through the cassette flow circuit from port PO**8** to port PO**1**, and to the in-process container **594** instead of flowing directly into the chamber **500** via port PO**5**. In contrast to the first phase, the operation of just the donor pumps PU**3**/PU**4** is sufficient for flowing the blood into the in-process container **594** in the phase of FIG. **52**B. The blood pumped into the in-process container **594** is temporarily stored therein before it is eventually pumped into the chamber **500**, as will be described in greater detail herein.

In one embodiment, blood is drawn from the source by one of the donor pumps PU**3**/PU**4** while the other donor pump PU**3**/PU**4** expels the blood to the chamber **500** or the in-process container **594**. This allows for simultaneous blood draw and pumping to the chamber **500** or the in-process container **594**.

The blood may be alternately pumped to the chamber **500** (FIG. **52**A) and then to the in-process container **594** (FIG. **52**B) at a particular ratio (e.g., 9:1) to fill both at the same time.

C. Separation Stage

Within the chamber **500**, separation of the fluid components occurs based on density, as shown in FIG. **46**, while the chamber spins at a "hard spin" rate of, for example, approximately 4500 RPM. It is noted that the angular velocities used herein conventionally are "two omega" (i.e., the spin speed of the chamber itself) although "one omega" (i.e., the speed at which the umbilicus is orbited around the chamber) may also be used, as well as some combination thereof. Further detail of this separation is set forth in Brown, "The Physics of Continuous Flow Centrifugal Sell Separation," Artificial Organ, 13(1):4-20 (1989). A higher density component such as red blood cells is forced towards the outer or high-side wall portion in an outermost layer **552** and a lower density component such as platelet poor plasma is forced towards an inner or low-g side wall portion in an innermost layer **550**. The interface layer **554** between the red blood cells and the plasma contains a buffy coat layer which includes at least a portion of platelets and white blood cells, although the components of the interface will vary based on the particular procedure employed.

As the interface is pooling upstream of the barrier **516**, fluid may be collected separately from either side of the interface—or both sides thereof—through the respective outlet **542** or **544** depending on the requirements of the procedure. For example, FIG. **53** schematically illustrates the path of whole blood out of port PO**5** of the cassette **592** and into the chamber **500**, with the blood separating into its constituent parts and some platelet poor plasma exiting the chamber **500** through the plasma outlet **542** (per FIG. **46**). The plasma exiting the plasma outlet **542** flows through tubing and into the cassette **592** via port PO**6** of the cassette **592**. When the plasma enters the cassette fluid circuit **600**, the plasma pump PU**2** cooperates with the various valves to convey the plasma to port PO**3** of the cassette **592**. The plasma exiting port PO**3** travels through tubing and into the plasma collection container **576**.

Simultaneously, some red blood cells are collected radially outward of the interface, exiting the chamber **500** through the red blood cell outlet **544** (per FIG. **46**). The red blood cells exiting the red blood cell outlet **544** flow through tubing and into the cassette **592** via port PO**7** of the cassette **592**. When the red blood cells enter the cassette fluid circuit **600**, they are directed to port PO**2** of the cassette **592**. The red blood cells exiting the port PO**2** travel through tubing and into the red blood cell collection container **578**.

While the plasma and red blood cells are being separated and removed from the chamber **500**, the barrier **516** allows for accumulation of platelets (which are contained in the buffy coat/interface layer **554**) in the channel **508**, substantially without the platelets exiting the chamber **500** (per FIG. **46**).

In one embodiment, the stages of drawing whole blood into the chamber and collecting platelet poor plasma and red blood cells (while retaining buffy coat in a pool upstream of the barrier **516**) are repeated until a predetermined amount of platelets is present in the pooled buffy coat. The amount of platelets that may be pooled in the chamber without causing an overspill or underspill condition depends, in part, upon the distance between the low-g and high-g walls. In one embodiment, the low-g and high-g walls are sufficiently spaced from each other to allow for at least one therapeutic unit of single dose platelets or 6×10^{11} platelets to be pooled upstream of the barrier without causing an overspill or underspill condition. In another embodiment, the low-g and high-g walls are sufficiently spaced from each other to allow for at least approximately 7×10^{11} platelets to be pooled upstream of the barrier without causing an overspill or underspill condition. As an additional benefit of such a channel configuration, the interface will be farther spaced from the plasma outlet **542**, resulting in less white blood cell contamination of the collected platelets.

D. Return Stage

Typically, the amount of blood that must be processed to collect one therapeutic unit of single dose platelets results in a surplus of separated platelet poor plasma and red blood cells. Accordingly, periodically during the platelet pooling process, an amount of the collected platelet poor plasma and red blood cells may be returned to the blood source or otherwise conveyed to a recipient.

This may be achieved according to conventional methods, i.e., conveying the plasma and red blood cells separately with saline or, more advantageously, the returning volumes of plasma and red blood cells may be interleaved as they are

being conveyed to the recipient. An illustrative interleaving process is shown in FIGS. **54**A-**54**C.

In one phase of the interleaving process (FIG. **54**B), a volume of separated red blood cells from the red blood cell collection container **578** is conveyed to the recipient by operation of the donor pumps PU**3** and PU**4** of the cassette during a red blood cell pumping interval. As illustrated, red blood cells from the red blood cell outlet **544** of the chamber **500** and/or saline from the saline container **566** may also be conveyed to the recipient at this time. This phase operates for a selected number of pump strokes to convey a particular volume of red blood cells to the recipient while separated platelet poor plasma from the chamber **500** is directed into the plasma collection container **576** by operation of the cassette.

Once the foregoing phase has been completed, a second phase (illustrated in FIG. **54**C) is initiated. In this phase, a volume of separated plasma from the plasma collection container **576** is conveyed to the recipient by operation of the donor pumps PU**3** and PU**4** of the cassette during a plasma pumping interval. As illustrated, plasma from the plasma outlet **542** of the chamber **500** and/or saline from the saline container **566** may also be conveyed to the recipient at this time. This phase operates for a selected number of pump strokes to convey a particular volume of plasma to the recipient while separated red blood cells from the chamber **500** are directed into the red blood cell collection container **578** by operation of the cassette.

These two phases are alternated repeatedly to convey any excess amounts of collected plasma and red blood cells to the recipient. The duration of each pumping interval (i.e., the number of pump cycles) and, hence, the volume of plasma or red blood cells conveyed to the recipient during a particular phase, depends on the ratio of red blood cells vs. plasma to be returned to the recipient (the "interleaving ratio"), taking into account any other relevant factors as well. For example, if the amount of red blood cells to convey to the recipient is twice the amount of plasma to convey to the recipient, the system controller will calculate that the volume of red blood cells to be conveyed in a given phase is twice the volume of plasma to be conveyed in a given phase. With this information, the controller can calculate a 2:1 interleaving ratio and then actuate the pump system to carry out such interleaving ratio. If the efficiency of pumping red blood cells is approximately equal to the efficiency of pumping plasma, the duration of the red blood cell pumping interval should be approximately twice as long as the duration of the plasma pumping interval. On the other hand, if the efficiencies are different, then the relative durations of the pumping intervals will be adjusted to some other ratio so as to carry out the calculated interleaving ratio.

It will be appreciated that the interleaved fluid conveyed to the recipient will be similar to anticoagulated blood, having a lower citrate concentration than plasma, thereby improving donor comfort (if the recipient is a human donor), and a lower viscosity than concentrated red blood cells, thereby decreasing the return time. Further, the return time will also be shorter than known procedures whereby saline is interleaved with the fluid, as no time is spent returning excess saline volume.

Regardless of the manner in which plasma and/or red blood cells are returned to the donor, it will be appreciated that, in a one needle system, blood cannot simultaneously be withdrawn from a donor while returning fluids to the donor. As such, the direct donor-to-chamber draw phase illustrated in FIG. **52**A cannot be employed to supply the chamber **500** with additional blood during the return stage. Accordingly, while the plasma and/or red blood cells are being returned to the donor, the whole blood previously supplied to the in-process container **594** (during the draw phase illustrated in FIG. **52**B) may be pumped into the chamber **500**, as shown in FIGS. **54**B and **54**C, allowing for non-stop processing.

E. Red Blood Cell/Platelet Flush Stage

At the end of the platelet pooling process and when it has been determined that the required amounts of plasma, red blood cells, and platelets are present in the system, it may be advantageous for an underspill condition to be imposed upon the fluid components. The operation of the cassette **592** to cause an underspill condition is shown in FIG. **55**A. The underspill condition may be forced by stopping the in-process pump PU**1** of the cassette **592** and reversing the plasma pump PU**2**, thereby causing plasma to be pulled from the plasma collection container **576** (which is connected via tubing to port PO**3** of the cassette **592**) and into the cassette flow circuit **600**. The continued reverse operation of the plasma pump PU**2** directs the plasma through the cassette flow circuit **600** and out the cassette port PO**6**, causing it to return to the chamber **500** through the plasma outlet **542**. The plasma entering the chamber **500** pushes the fluid components in the channel **508** toward the high-g wall **504**, thereby displacing red blood cells and buffy coat into the red blood cell outlet **544** (which is connected via tubing **608** to port PO**7** of the cassette **592**). As described previously, the presence of buffy coat materials in the red blood cell outlet **544** constitutes an underspill condition.

An optical sensor (such as the sensor **336** described above) associated with the tubing **608** connecting the red blood cell outlet **544** to port PO**7** of the cassette **592** detects that a portion of the interface/buffy coat layer is exiting the outlet, which usually has red blood cells exiting therethrough. Such underspill condition is empirically determined based on the optical transmissivity of light through the components in the outlet tubing **608**. The optical sensor data is converted to a hematocrit. A decrease in hematocrit of the fluid moving through the outlet tubing **608** registers as an underspill condition.

Forcing an underspill condition allows the interface to be forced radially outward as compared to the radial location of the interface during normal collection operation. The underspill condition allows removal of red blood cells into the red blood cell collection container **578** (which is connected via tubing to port PO**2** of the cassette **592**) until the resulting fluid in the chamber **500** has a hematocrit in a target range of, for example, approximately 20 to 40 percent.

The forced underspill may be followed by an "add RBC" phase to return a controlled amount of packed red cells from the red blood cell collection container **578** to the chamber **500**, thereby ensuring that the optimal amount of red blood cells is present in the chamber **500**. FIG. **55**B illustrates the operation of the cassette **592** during an "add RBC" phase. Such a procedure may be achieved by returning the plasma pump PU**2** to its forward pumping direction, causing platelet poor plasma to flow out of the plasma outlet **542** of the chamber **500** (which is connected via tubing to port PO**6** of the cassette **592**) and into the cassette flow circuit **600**. The plasma is directed through the cassette flow circuit **600**, out cassette port PO**3**, and into the plasma collection container **576**. Simultaneously, flow into the chamber **500** via the whole blood inlet **510** is stopped which, when combined with the plasma being removed from the chamber **500** via the plasma outlet **542**, has the effect of drawing the last-exiting fluid from the cassette **592** via port PO**7**, through the red blood cell outlet **544**, and back into the chamber **500**.

Once a desired hematocrit level is achieved in the chamber **500**, the fluid in the chamber **500** is advantageously kept

within the desired hematocrit range. For example, the flow of separated plasma out of the chamber **500** via the plasma outlet **542** may be stopped and/or the flow of separated red blood cells from the chamber **500** via the red blood cell outlet **544** may also be stopped. Such flow may be stopped by operation of the cassette valves and/or by stopping operation of one or more cassette pumps, such as the plasma pump PU**2**. The in-process pump PU**1** may continue to operate, although it may be advantageous for it to be operated at a lower flow rate.

At this time, the excess collected red blood cells and plasma may be conveyed to a recipient (as described above), followed by the recipient/donor being disconnected from the system. An additional amount of red blood cells may be conveyed to the recipient, with the understanding that the red blood cell harvesting stage (which will be described in greater detail herein) will ultimately bring the amount of collected red blood cells up to the target yield.

F. Recombination Stage

The exemplary method further includes the recombination of the separated fluid components within the chamber. FIGS. **56**A and **56**B illustrate the operation of the cassette **592** during the recombination stage. In one embodiment, recombination is performed by rotation of the chamber **500** in both clockwise and counterclockwise directions, whereby the chamber **500** is rotated alternately in clockwise and counterclockwise directions one or more times. During this recombination stage, the valves VAL**17** and VAL**19** associated with the plasma outlet **542** (which is connected via tubing to port PO**6** of the cassette **592**) are closed. With the plasma outlet **542** effectively closed, the contents of the chamber **500** are forced to exit or enter the chamber **500** via the whole blood inlet **510** and/or the red blood cell outlet **544**. The donor pumps PU**3** and PU**4** and the in-process pump PU**1** of the cassette **592** are operated to cycle the blood components into and out of the chamber **500**, as generally illustrated in the two-phase process of FIGS. **56**A and **56**B.

In the phase illustrated in FIG. **56**A, the blood components present in the donor pumps PU**3** and PU**4** are pumped through the cassette flow circuit **600** to the in-process pump PU**1**. In the phase illustrated in FIG. **56**B, the blood components present in the in-process pump PU**1** are pumped through the chamber **500** (in through the whole blood inlet **510** via cassette port PO**5** and out the red blood cell outlet **544** via cassette port PO**7**) and into the donor pumps PU**3** and PU**4**. These phases alternate as the chamber **500** is rotated alternately in clockwise and counterclockwise directions.

The recombination stage results in a uniform blood-like mixture which includes plasma, red blood cells, platelets, and white blood cells having an approximate chamber hematocrit as previously described. The recombination stage may last approximately one to three minutes, although this time period may vary. The rotation of the chamber in either direction may be at a rate much lower than the rate of rotation during initial separation of the components and may be, for example, in the range of approximately 300 to 600 RPM, although other rates of rotation are possible.

G. Platelet Storage Solution Prime Stage

If a platelet storage fluid other than plasma (e.g., PAS III) is to be used for storing the separated platelets, as will be described in greater detail herein, it may be advantageous to initiate a "platelet storage solution prime" stage after the recombination stage. The operation of the cassette **592** during such a stage is illustrated in FIG. **57**. In such a stage, an amount of (non-plasma) platelet storage solution is pumped from a platelet storage solution container (which is connected via tubing to port PO**11** of the cassette **592**), through the cassette flow circuit **600**, and to the in-process container **594** (which is connected via tubing to port PO**1** of the cassette **592**) by the plasma pump PU**2**. This moves any air from the platelet storage solution container into the in-process container **594**, ensuring that it will not remain in the flow path during the processing steps which follow.

An amount of (non-plasma) platelet storage solution may be pumped into the chamber to displace some of the plasma out of the plasma outlet **542**, through the cassette flow circuit **600**, and into the plasma collection container **576**. This may be advantageous if it is desired for the resulting platelet storage solution to have a higher non-plasma platelet storage solution to plasma ratio than what is typically achieved by the present procedure.

H. Recirculation Stage

1. Recirculation Phase 1

After a sufficient recombination period, the rotor is then restarted to rotate the chamber in a uniform direction, with the flow within the chamber being generally directed from the inlet **510** to the first and second outlets **542** and **544** (although fluid is still prevented from exiting the chamber via the plasma outlet **542**). The specific speed of the rotor may vary, but may be a "slow spin" of approximately 2500-2700 RPM, which separates a red blood cell layer from a layer containing plasma and platelets. During this time, the valves VAL**17** and VAL**19** associated with cassette port PO**6** are closed, effectively closing the plasma outlet **542** and forcing the fluid in the chamber **500** to exit via the red blood cell outlet **544** (which is connected via tubing to port PO**7** of the cassette **592**) and flow into the donor pumps PU**3** and PU**4**, identical to the second phase of the recombination stage shown in FIG. **56**B. The donor pumps PU**3** and PU**4** pump the fluid through the cassette flow circuit **600** to the in-process pump PU**1** (identical to the first phase of the recombination stage shown in FIG. **56**A). Finally, the in-process pump PU**1** pumps the fluid out of port PO**5**, through the whole blood inlet **510**, and back into the chamber inlet **510**. This phase of the recirculation stage continues for a sufficient time to allow the red blood cell layer to settle within the chamber.

2. Recirculation Phase 2

After the red blood cell layer has settled within the chamber, VAL **17** is opened, as shown in FIG. **58**A, allowing flow through cassette port PO**6** and effectively re-opening plasma outlet **542** (which is connected via tubing to port PO**6**). During this phase, the red blood cell layer continues exiting the chamber via the red blood cell outlet **544**, flowing into the cassette flow circuit **600** via port PO**7**, and being directed to one of the donor pumps PO**3**. With the plasma outlet **542** re-opened, the layer including plasma and platelets (and any non-plasma platelet storage solution) is allowed to exit the chamber therethrough and enter the cassette flow circuit **600** via port PO**6**. The plasma/platelet layer is directed from port PO**6** to the plasma pump PU**2**, as shown in FIG. **58**A.

Thereafter, the contents of the donor pump PU**3** (i.e., the red blood cell layer) and the plasma pump PU**2** (i.e., the plasma/platelet layer) are pumped through the cassette flow circuit **600** and into the in-process pump PU**1** (FIG. **58**B), where they are recombined. The in-process pump PU**1** subsequently pumps the combined fluids out of the cassette **592**

via port PO**5** and back to the chamber **500** (FIG. **58**A). These sub-phases alternate, thereby creating a recirculation loop into and out of the chamber.

During recirculation, no plasma, platelets, or red blood cells are collected. The platelet concentration in the plasma/platelet layer generally increases during this phase, with platelets from the interface becoming suspended in the plasma.

Recirculation of the components continues until an optical sensor (such as the sensor **334** described above) associated with the tubing **610** connecting the plasma outlet **542** and cassette port PO**6** detects a plasma/platelet layer which has a desired concentration of platelets and which is visually low in red blood cells. As discussed above, the hematocrit of the recirculated mixture is approximately between 20-40 percent. Recirculation may also be modified so as to recirculate only one of the components, either plasma or red blood cells, as desired.

During the recirculation stage, an illustrative pump flow rate ratio of the in-process pump PU**1** and plasma pump PU**2** is 60/40, although other pump rates may be used depending on the particular conditions of the system. Recirculation may also allow an increasing concentration of white blood cells to settle to the interface between the plasma/platelet layer and the red blood cells. Such pump ratio has also been found to have a direct influence on the number of white blood cells that contaminate the plasma/platelet layer and the overall platelet concentration collection efficiency. By way of example and not limitation, FIGS. **59**A and **59**B show a collected fluid having a higher concentration of platelets (FIG. **59**A) and a lower concentration of white blood cells (FIG. **59**B). In FIGS. **59**A and **59**B, such fluid was collected from a chamber having approximately 120 cm^2 surface area, which was operated at a speed of approximately 2500 RPM with a chamber hematocrit of approximately 25%. Other collection efficiencies may be developed for different chamber surface areas, centrifugal speeds and chamber hematocrits.

Recirculation of the plasma/platelet layer may continue for several minutes (approximately two to four minutes in one embodiment), which duration may vary depending upon the particular procedure. During this time, the content of the plasma/platelet layer in the tubing **610** associated with the plasma outlet **542** may be monitored by the aforementioned optical sensor. For best results, this monitoring is typically delayed until the plasma/platelet layer is substantially uniform. The sensor can detect the presence of platelets in the plasma, and the data collected by the sensor can be used during recirculation to calculate a number of quantities. Those having skill in the art will appreciate that the plasma/platelet layer will have a higher platelet concentration than typical "platelet rich plasma" (i.e., a plasma/platelet layer that is formed by subjecting whole blood to a "soft spin" without the prior removal of an amount of platelet poor plasma), so the signal will be stronger and the resulting data will tend to be more reliable than data collected by observing typical "platelet rich plasma."

Among the various quantities that can be calculated, the data collected by the optical sensor can be used to estimate the current platelet yield. The difference between a baseline optical density (i.e., the optical density of plasma substantially free of cellular components) and the detected optical density of the plasma/platelet layer is indicative of the platelet concentration of the plasma/platelet layer, so a "snapshot" of the platelet content can be estimated by comparing the two values over a period of time and then integrating the area therebetween during that time. The integrated value can be extrapolated to the total volume of blood processed to estimate the current platelet yield.

When the current platelet yield is known, the platelet pre-count of the donor can be estimated. This may be estimated, for example, by considering the amount of detected platelets and the volume of blood that has been processed (i.e., the current platelet yield), then comparing those values (along with any other necessary information, such as donor hematocrit, weight, and gender, for example) to empirical data indexing such values with known platelet pre-counts. These calculations may be performed by the software of the system controller or the data may be transmitted to an external integrator before the results are returned to the system as a platelet pre-count.

This information may be used to calculate a number of other values, for example, the volume of blood to be processed to collect a target amount of platelets. In one embodiment, this is calculated by feeding the calculated platelet pre-count, the target platelet yield, and any other necessary information (such as donor hematocrit, weight, and gender) into a predictor that calculates the volume of blood to be processed. If the calculated volume is greater than the volume of blood in the system, then the process may be modified to include additional draw stages to draw additional blood from the donor or the system may give the operator the option to collect less platelets than the target amount.

This information may also be used to calculate the processing time required to collect a target amount of platelets using, for example, a calculation process similar to that described previously with regard to the volume of blood to be processed to collect a target amount of platelets. If the calculated processing time exceeds a selected "maximum" processing time (due, for example, to a donor having a below-average platelet pre-count), the system may present the operator with a number of options. For example, in one embodiment, the expected products are one unit of single dose platelets, one unit of red blood cells, and one unit of plasma. In this case, the operator can be given the option of collecting only the red blood cells and plasma (while returning the platelets to the donor) or collecting the full amounts of red blood cells and plasma and a partial dose of platelets. Alternatively, the choice to modify the expected products during the procedure may be made by the system controller rather than by the operator.

Other adjustments may also be made to the collection procedure during processing for optimal performance. For example, in one embodiment, the target range for collected platelets is between 3.0×10^{11} (the industry requirement) and 4.7×10^{11} (the maximum platelet capacity of an exemplary platelet collection container). If it is determined that the platelet yield will exceed the target value or range, the spin speed of the chamber may be increased to sediment some of the platelets out of the plasma/platelet layer. As an additional benefit, increasing the spin speed will also cause some white blood cells in the plasma/platelet layer to sediment out of the layer, thereby reducing the white blood cell content of the plasma/platelet layer. Alternatively, if it is determined that the platelet yield will fall below a targeted value or range, the spin speed of the chamber may be decreased to pull more platelets from the interface into the plasma/platelet layer.

Yet another option is to use the calculated platelet yield to calculate the optimal amount of platelet storage fluid (e.g., platelet poor plasma or non-plasma storage solution or a combination thereof) to use for storing the platelets.

Those having skill in the art will appreciate that other quantities can also be calculated by measuring the amount of platelets in the outlet tubing **610** during this recirculation stage.

I. Platelet Harvesting Stage

After the recirculation stage and any additional blood processing stages (if it is determined during the recirculation stage that additional blood collection and processing are required to collect the target amount of platelets), a platelet harvesting stage is initiated. In the platelet harvesting stage, the plasma/platelet layer is pumped out of the chamber **500** via the plasma outlet **542** and into the platelet collection container **574**. This is achieved by continuing the immediately preceding recirculation stage, but adding a platelet storage fluid (platelet poor plasma from the plasma collection container **576** and/or non-plasma storage solution from the platelet storage solution container) to the circulating fluid. The additional fluid replaces the fluid volume lost within the chamber **500** due to collection of the plasma/platelet layer.

In particular, as shown in FIG. **58**B, the contents of the plasma pump PU**2** (i.e., the plasma/platelet layer) and the contents of the donor pump PU**3** (i.e., the red blood cell layer) flow to the in-process pump PU**1**. The mixed contents of the in-process pump PU**1** are then pumped out of cassette port PO**5** and into the chamber **500**, as packed red cells exit the chamber **500** via the red blood cell outlet **544** and are pumped through cassette port PO**7** into the donor pump PU**3** (FIGS. **60**A/**60**B). Simultaneously, the plasma/platelet layer exits the chamber **500** via the plasma outlet **542** and is pumped through cassette port PO**6**, through the cassette flow circuit **600**, and out port PO**4** to the platelet collection container **574** (FIGS. **60**A/**60**B). Rather than being filled with the plasma/platelet layer (as in the recirculation stage), the plasma pump PU**2** is filled with a platelet storage fluid. In one embodiment, illustrated in FIG. **60**A, the plasma pump PU**2** is filled with plasma from the plasma collection container **576** (which is connected via tubing to port PO**3** of the cassette **592**). In another embodiment, illustrated in FIG. **60**B, the plasma pump PU**2** is instead filled with non-plasma storage solution from the platelet storage solution container (which is connected via tubing to port PO**11** of the cassette **592**).

With this additional fluid in the plasma pump PU**2**, the contents thereof and the contents of the donor pump PU**3** again flow into the in-process pump PU**1** (FIG. **58**B). Finally, the in-process pump PU**1** is emptied into the chamber **500** through the whole blood inlet **510** (which is connected via tubing to port PO**5** of the cassette **592**), with the plasma/platelet layer being displaced out of the plasma outlet **542** and into the cassette flow circuit **600** via port PO**6** (alternatively illustrated in FIGS. **60**A and **60**B). Once in the cassette **592**, the plasma/platelet layer is pumped from port PO**6** to port PO**4** and to the platelet collection container **574**. Simultaneously, the packed red cells flow from the red blood cell outlet **544**, into the cassette flow circuit **600** via port PO**7**, and through the cassette flow circuit **600** to the donor pump PU**3** (alternatively illustrated in FIGS. **60**A and **60**B). These sub-phases alternate (i.e., between the sub-phase illustrated in FIG. **58**B and the sub-phase illustrated in FIGS. **60**A/**60**B), thereby creating a recirculation loop into and out of the chamber, with an amount of the plasma/platelet layer being collected during each iteration of the loop.

The sub-phases illustrated in FIGS. **60**A and **60**B may be practiced independently (e.g., employing only the sub-phase of FIG. **60**A in combination with the sub-phase of FIG. **58**B to harvest and store platelets in platelet poor plasma) or combined during a given procedure. For example, the platelet harvesting stage may following a repeating loop from the sub-phase illustrated in FIG. **58**B, to the sub-phase illustrated in FIG. **60**A, to the sub-phase illustrated in FIG. **58**B, to the sub-phase illustrated in FIG. **60**B, and finally back to the beginning of the loop. Such a harvesting loop may be modified depending on the particular process, for example, by employing a loop initiating two FIG. **60**A sub-phases for every FIG. **60**B sub-phase that is initiated. In yet another embodiment, non-plasma storage solution is used to displace and store platelets (i.e., the FIGS. **58**B and **60**B sub-phases are alternated) until a target amount of storage solution has been used, at which time platelet poor plasma is used to displace and store the platelets (i.e., the FIGS. **58**B and **60**A sub-phases are alternated) until the target platelet yield is achieved.

One phenomenon that has been observed is the plasma/platelet layer becoming contaminated by white blood cells during the platelet harvesting stage. Rather than a uniform or continuous contamination, the white blood cells typically spill into the plasma/platelet layer in a single "burst" shortly after the harvesting stage begins. A diagram of the white blood cell contamination is shown in FIG. **61**A. Typically, this "burst" is detected approximately one minute after the beginning of the harvesting stage, which has led to the belief that the "burst" is caused by non-plasma storage solution reaching the chamber. The non-plasma storage solution is less dense than the plasma/platelet layer, and this slight difference in physical properties may disturb the interface, causing white blood cells to spill through the plasma outlet **542**. Typically, around the two-minute mark of the harvesting stage, the white blood cell concentration (as detected by the optical sensor associated with the outlet tubing **610**) will begin to decrease and, around the three-minute mark, the white blood cell concentration will be at or below the level at the beginning of the platelet harvesting stage.

It is known that increasing the spin speed of the chamber **500** will force more white blood cells to sediment from the plasma/platelet layer into the interface, so the "burst" may be combated by spinning the chamber **500** at a higher speed during the harvesting stage. However, increasing the spin speed also degrades the platelet recovery, as some of the platelets will be sedimented into the interface with the white blood cells. Accordingly, it may be advantageous to operate the chamber at an elevated spin speed only during the beginning of the platelet harvesting stage (i.e., during the time of the "burst") and decrease the speed during the remainder of the stage, as is shown in FIGS. **61**B-**61**D. In an exemplary embodiment, the recirculation stage is carried out at a spin speed of approximately 2700 RPM, which may be gradually or incrementally increased to an elevated speed (around 3000 RPM in one embodiment) before being decreased to the original spin speed.

FIGS. **61**B and **61**C illustrate two different spin speed profiles for combating the "burst." In the embodiment of FIG. **61**B, the spin speed is gradually increased at a rate of approximately 200 RPM/min to a maximum spin speed of approximately 3000 RPM at approximately one and a half minutes after the beginning of the harvesting stage. Thereafter, the spin speed is gradually decreased at a rate of approximately 200 RPM/min to return to the original spin speed of approximately 2700 RPM by the three-minute mark of the harvesting stage. The spin speed remains at approximately 2700 RPM for the rest of the harvesting stage.

In the embodiment of FIG. **61**C, the spin speed is increased at a rate of approximately 300 RPM/min, such that the chamber will be spinning at approximately 3000 RPM at the time

that the "burst" typically occurs. The spin speed remains at 3000 RPM for approximately one minute and then, at the two-minute mark, the spin speed is ramped down at, for example, 300 RPM/min to the original spin speed, where it remains for the rest of the harvesting stage.

FIG. **61**D illustrates yet another possible spin speed profile. This profile is similar to that of FIG. **61**C, but the spin speed is ultimately ramped down to a speed below the spin speed at the beginning of the harvesting stage, for example 2500 RPM. This may be advantageous to compensate for the decreased collection efficiency during the elevated spin speed and may be employed without risking additional contamination, as it has been observed that the white blood cell concentration detected by the optical sensor is relatively low after the three-minute mark of the harvesting stage. These illustrated spin speed profiles are merely illustrative, and other "burst"-combating spin speed profiles may also be employed without departing from the scope of the present disclosure. This principle may also be employed to combat other contamination profiles, such as those characterized by multiple "bursts" or the like.

In yet another embodiment, the platelet harvesting stage may be modified by incrementally decreasing the spin speed of the chamber while the plasma/platelet layer is being collected. So decreasing the spin speed will move the interface closer to the low-g wall **502**, thereby pushing the platelets toward the plasma outlet **542** and increasing the efficiency of the system. This embodiment is best employed when only platelet poor plasma is used to collect and store the platelets, as the use of platelet poor plasma alone will typically avoid the aforementioned "burst" of white blood cells.

Regardless of the particular chamber spin speed profile that is employed during the platelet harvesting stage, it may be advantageous to continue monitoring the platelet concentration of the plasma/platelet layer as it is being collected to determine when the target amount of platelets has been collected. The yield can be calculated, for example, by comparing a curve plotting a baseline optical density (of a plasma layer containing substantially no cellular components) to a curve plotting the detected optical density. The difference between the two values is indicative of the platelet concentration of the plasma/platelet layer, so the amount of platelets collected can be calculated by comparing the two values during the platelet harvesting stage and then integrating the area between the curves periodically. If the optical reading differs from that which is expected, the spin speed of the chamber may be changed to bring it back in line (e.g., by increasing the spin speed to sediment platelets from the plasma/platelet layer and decrease the optical density of the plasma/platelet layer or decreasing the spin speed to pull platelets into the plasma/platelet layer from the interface and increase the optical density of the plasma/platelet layer). The optical readings taken during the platelet harvesting stage or the final platelet yield calculated during the recirculation stage (described above) may be used to make on-the-fly adjustments to the amount of storage fluid ultimately added to the platelet collection container.

When the target platelet yield has been reached, the system may operate to flow plasma and/or non-plasma storage solution directly to the platelet collection container (bypassing the chamber) if need be.

Although the majority of leukocytes in the plasma/platelet layer will sediment therefrom during the aforementioned recirculation stages, some leukocytes typically remain in the collected fluid. The illustrated disposable sets **556** and **558** (FIGS. **47** and **48**, respectively) show an in-line leukoreduction filter **580** between the cassette **592** and the platelet collection container **574**. In such embodiments, the plasma/platelet layer that is pumped out of the chamber **500** by the plasma pump PU**2** is pumped through the leukoreduction filter **580** and into the platelet collection container **574** while the chamber **500** is still spinning and processing the blood components. In one example, a reduction of white blood cells from approximately 1.0×10^7 to approximately 1.0×10^4 on account of an in-line leukoreduction filter was observed.

J. Red Blood Cell Harvesting Stage

When the platelet harvesting stage is complete, the system continues with a red blood cell harvesting stage, which is illustrated schematically in FIG. **62**. During this stage, the valves VAL**17** and VAL**19** associated with cassette port PO**6** are closed, effectively closing the plasma outlet **542**, and the spin speed of the chamber **500** is increased to a "hard spin" of, for example, approximately 4500 RPM. The in-process pump PU**1** delivers platelet poor plasma from the plasma collection container **576** (which is connected via tubing to port PO**3** of the cassette **592**) to the chamber **500** via the whole blood inlet **510** (which is connected via tubing to port PO**5** of the cassette **592**). The incoming plasma forces the packed red blood cells out of the red blood cell outlet **544** and into the cassette flow circuit **600** via port PO**7**. The red blood cells are directed through the cassette flow circuit **600**, out of port PO**2**, and to the red blood cell collection container **578**.

K. Post-Processing Stage

After the platelets and red blood cells have been collected, any of a number of post-processing procedures may be initiated, a number of which are described below.

1. Burping the Platelet Product

As a result of the manufacturing process, there may be some air present in the tubing leading from the cassette **592** to the platelet collection container **574** or in the associated leukoreduction filter **580**, which means that the plasma/platelet layer passing through the filter **580** will force the air into the platelet collection container **574**. For a number of well-known reasons, it is desirable to avoid air in the collection container. Accordingly, the platelet collection container **574** may include a length of tubing leading to a gas exhaust or air burp bag **582**, as shown in FIGS. **47** and **48**. Air is removed from the collected platelet product by closing the inlet tubing (typically with a clamp) and squeezing the flexible container **574**, thereby forcing air out of the container **574** and into the air burp bag **582**. The operator watches the tubing to the air burp bag **582** to ensure that little to no platelet product leaves the container **574** during this de-aeration or "burping" process.

Alternatively, rather than employing a manual burping process, an automated burping process is possible. FIGS. **63**A-**63**D show an illustrative automated de-aeration or burping process. First, a pump **612** is operated in a forward direction to pump fluid "F" through a conduit **614** to a flexible collection container **616** (FIG. **63**A). This first step is optional, as the following operations may be performed with any flexible container with an amount of fluid and gas, regardless of how the fluid and gas were transferred into the container. When all of the fluid "F" has been pumped into the collection container **616**, there will be an amount of air "A" above the fluid "F." To remove the air, the pump **612** is operated in a reverse direction to pull the air "A" and fluid "F" back out of the collection container **616** (FIG. **63**B). As air "A" and fluid "F" are being

removed from the collection container **616**, an optical sensor **618** (e.g., a QProx™ sensor from Quantum Research Group Ltd. of Hamble, England) monitors the conduit **614**. The optical sensor **618** is adapted to distinguish between air and fluid in the conduit **614** and may be configured according to known design.

When the optical sensor **618** detects the air-fluid interface "I" in the conduit **614** (FIG. **63**C), it signals for the pump **612** (or signals to an intermediary, such as a controller, that commands the pump) to stop operating in the reverse direction and switch to operating in the forward direction. The pump **612** continues to run in the forward direction until the fluid "F" in the conduit **614** has been returned to the collection container **616**, with the air "A" remaining in the conduit **614** (FIG. **63**D). The volume of fluid "F" in the conduit **614** can be calculated, based on the geometry of the conduit **614** and the distance between the collection container **616** and the sensor **618**, so the pump **612** may be operated for a predetermined number of forward cycles (each of which returns a calculable volume of fluid "F" to the collection container **616**) to return the fluid "F" to the collection container **616**. It will be appreciated that such an automated process may be employed to remove air from the collected blood component(s) in any of the collection containers described herein.

This automated burping process may be variously modified without departing from the scope of the present disclosure. For example, rather than performing a predetermined number of pump cycles to return fluid from the conduit **614** to the collection container **616**, the operator may be given the option (via a touch screen or other user interface system) to enter the number of cycles to perform. In another embodiment, the operator may be given the option to order a pump cycle (either a forward or reverse cycle) at the touch of a button or icon. In yet another embodiment, the system controller may automatically burp the collection container and thereafter give the operator the option of confirming that there has been sufficient purgation and, if not, allow the operator to order individual or multiple pump cycles.

2. Red Blood Cell Storage and Filtration

The disposable sets **556** and **558** illustrated in FIGS. **47** and **48** include a red blood cell storage container **586**, which is distinct from the red blood cell collection container **578**. For reasons that are well-known, it is beneficial to add an additive solution (e.g., Adsol® or SAG-M) to packed red cells. While it is possible to add an additive solution from an additive solution container **564** to the packed red cells in the red blood cell collection container **578** after processing, doing so requires an additional mixing step that is typically performed manually. Rather than carrying out such a procedure, it may be advantageous to automatically mix the packed red cells and additive solution as they are flowing into the red blood cell storage container **586**. This can be achieved, for example, by an interleaving process whereby a first phase of pumping an amount of packed red cells from the red blood cell collection container **578** to the red blood cell storage container **586** is alternated with a phase of pumping an amount of additive solution from the additive solution container **564** to the red blood cell storage container **586**. By alternating the two phases, the contents of the red blood cell storage container **586** are automatically mixed without requiring manual intervention.

The above mixing procedure is illustrated in greater detail in FIGS. **64**A-**64**C. FIG. **64**A shows an additive solution prime stage, whereby the donor pumps PU**3** and PU**4** are operated to flow additive solution from the additive solution container **564** into the cassette flow circuit **600** via port PO**12**. The solution is pumped through the cassette flow circuit **600** by the donor pumps PU**3** and PU**4** to port PO**2** and out of the cassette **592** to the red blood cell collection container **578**. This phase acts to prime the tubing between the additive solution container **564** and the cassette **592**. Next, FIG. **64**B shows the donor pumps PU**3** and PU**4** operating to flow packed red cells from the red blood cell collection container **578** into the cassette flow circuit **600** via port PO**2**, through the cassette **592**, and then out port PO**14** to the red blood cell storage container **586**.

As shown in the disposable sets **556** and **558** of FIGS. **47** and **48**, there may be an in-line leukoreduction filter **590** associated with the tubing between the cassette **592** and the red blood cell storage container **586**, thereby filtering the packed red cells as they are pumped through the leukofilter **590** and to the red blood cell storage container **586**.

After a certain number of red blood cell pumping cycles, the system switches to an additive solution pumping phase illustrated in FIG. **64**C. In this phase, additive solution is pumped from the additive solution container **564**, through the cassette flow circuit **600**, and into the red blood cell storage container **586** (i.e., into the cassette **592** through port PO**12** and out through port PO**14**). This phase continues for a certain number of pump cycles and then the phases of pumping packed red cells (FIG. **64**B) and additive solution (FIG. **64**C) to the red blood cell storage container **586** are alternated until the red blood cell collection container **578** is empty.

If the amount of additive solution required to achieve a target ratio (2.1:1 in one embodiment) has not been pumped to the red blood cell storage container **586** by the time the red blood cell collection container **578** is empty, a final phase of pumping additional additive solution to the red blood cell storage container **586** may be initiated.

3. Platelet Poor Plasma Storage and Filtration

In addition to filtering the collected packed red cells, any platelet poor plasma remaining in the plasma collection container **576** may be similarly pumped through a leukoreduction filter and stored in a plasma storage container (not illustrated).

A manual or automated burping process (e.g., the automated process described above with regard to the collected platelets) may be employed to remove any excess air from the filtered plasma and/or packed red cells. If the disposable set is not provided with an air burp bag for a particular filtered blood component, the air may be directed to one of the empty containers, for example, to the empty red blood cell collection container **578**.

When the various blood components are in their final storage containers, the containers are typically weighed or otherwise analyzed to confirm that the target yield has been achieved and thereafter separated from the disposable set, which is discarded. Depending on the configuration of the disposable set, samples of the various components may also be taken using, for example in the disposable sets **556** and **558** of FIGS. **47** and **48**, a sampling pack **584** for the harvested platelets and a length of segmented tubing **588** for the harvested packed red cells.

L. Other Modifications

Various modifications to the above-described method are possible. One modification includes operating the in-process pump PU**1** between at least two different pumping rates to effect recombination of the blood components. For example, fluid may be pumped into the chamber **500** by the in-process

pump PU**1** at a first flow rate while the chamber **500** is being rotated in a clockwise or counterclockwise direction, and then the rotation in either direction is repeated at a second flow rate. The centrifugal force may be decreased, such as by decreasing the rotor speed, where more than one flow rate is used.

Another modification includes operating the plasma pump PU**2** during recombination. Plasma exits the chamber **500** via the plasma outlet **542** and is pumped through the cassette **592** into the in-process container **594**. Simultaneously, the flow at the whole blood inlet **510** is reversed using the in-process pump PU**1** so that fluid from the chamber **500** is pulled from the chamber **500** via the whole blood inlet **510**, through the cassette **592**, and into the in-process container **594**. The fluid in the in-process container **594** is then pumped back into the chamber **500** through the whole blood inlet **510** by operation of the cassette **592**. Therefore, the fluid components are mixed together outside of the chamber **500** and then re-enter the chamber.

It is further possible to modify the pump ratio between the in-process pump PU**1** and the plasma pump PU**2** during the collection phase to different ratios at different times during the procedure.

In yet another embodiment, a 13-port cassette (e.g., one according to the foregoing description of the cassettes **28** and **28'**) may be employed rather than the 14-port cassette **592**. This may be achieved, for example, by collecting and storing platelets using only platelet poor plasma, which allows the non-plasma platelet storage solution container to be omitted, thereby alleviating the need for one cassette port. Other modifications are also possible.

IX. Red Blood Cell and Plasma Collection with Enhanced Functionality

Another benefit of a disposable set incorporating a 14-port cassette is that it can be used to provide enhanced functionality to procedures typically carried out with a 13-port cassette. For example, FIG. **65** illustrates a disposable set **620** with a 13-port cassette **622** that is suitable for use in practicing the previously described red blood cell and plasma collection process. The disposable set **620** is adequate when there is no need to filter the collected plasma, such as for procedures that are carried out in the United States. However, European standards for plasma purity are higher than in the United States, and it is advantageous to filter the collected plasma to remove cellular blood components (particularly white blood cells). Hence, a disposable set **624** (FIG. **66**) incorporating a 14-port cassette **592** may be provided. The additional port allows for the inclusion of tubing leading to an in-line filter **626**, a gas exhaust or air burp bag **628**, and a pair of plasma storage containers **630**. It will be seen that the disposable set **624** is similar to the sets illustrated in FIGS. **47** and **48**, differing principally in the omission of a platelet collection container and a platelet storage solution container, and the inclusion of the aforementioned filter **626**, air burp bag **628**, and storage containers **630** associated with cassette port PO**11**. However, the disposable set **624** of FIG. **66** may be provided with a platelet collection container or other container associated with port PO**4** without departing from the scope of the present disclosure.

A. Draw Stage

In an exemplary procedure for harvesting red blood cells and plasma using the disposable set **624** of FIG. **66** (in combination with a suitable blood processing device, such as the one illustrated in FIG. **1**), whole blood is pumped from a blood source to a separation device (e.g., the chamber **500** of FIGS. **44-46**) and the in-process container **594**. Anticoagulant from the anticoagulant container **562** is added to the whole blood by operation of the anticoagulant pump PU**5** of the cassette **592**. The anticoagulated blood may flow into the chamber **500** either from the blood source, or may flow from the in-process container **594**, where the blood from the blood source is temporarily stored for subsequent processing by the chamber **500**. The draw procedure can be understood with further reference to the flow diagrams illustrated in FIGS. **52**A and **52**B and the corresponding description from above.

B. Separation and Collection Stage

Next, within the chamber **500**, the fluid components are separated based on density, as shown in FIG. **46**, while the chamber spins at a "hard spin" rate of, for example, approximately 4500 RPM. As the interface **554** is pooling upstream of the barrier **516**, fluid may be collected separately from either side of the interface—or both sides thereof—through the respective outlet **542** or **544** depending on the requirements of the procedure. For example, in one embodiment (corresponding generally to the flow diagram of FIG. **53** and the accompanying description from above), some platelet poor plasma **550** is collected radially inward of the interface **554** through the plasma outlet **542** and into the plasma collection container **576**. Simultaneously, some red blood cells **552** are collected radially outward of the interface **554** through the red blood cell outlet **544** and flow into the red blood cell collection container **578**.

1. Reactive Spill Prevention And Control

In one embodiment, the plasma collection rate is determined by the operating rate of the plasma pump PU**2** of the cassette **592**. The operating rate of the plasma pump PU**2** may be constantly ramped to bias the system toward an overspill condition. This may be advantageous because an overspill condition can typically be corrected more quickly than an underspill condition. In particular, an overspill condition can be corrected by stopping the plasma pump PU**2**, thereby placing the red blood cell outlet **544** of the chamber **500** in a "flow-through" condition (in which any fluid exiting the chamber **500** does so through the red blood cell outlet **544** and not the plasma outlet **542**) until a calculated volume of blood has been pumped into the chamber **500**. Thereafter, the fluid in the plasma and red blood cell outlets **542** and **544** may be recirculated back into the chamber **500** (by operation of the in-process pump PU**1**) to flush the associated outlet tubing lines of undesirable material.

In contrast, an underspill condition can be corrected by closing the red blood cell outlet **544** and operating the plasma pump PU**2** in a "flow-through" state (in which any fluid exiting the chamber **500** does so through the plasma outlet **542** and not the red blood cell outlet **544**) until a set volume of blood has been pumped into the chamber **500** or an overspill condition is detected. The underspill condition is finally corrected by opening the red blood cell outlet **544** and operating the plasma pump PU**2** at a lower rate until a set volume of fluid has flown through the red blood cell outlet **544** or an overspill condition is detected.

If the plasma is deemed to be lipemic, it may be advantageous to instead operate the plasma pump PU**2** at a constantly decreasing rate to bias the system toward an underspill condition. Such bias protects the collected plasma product from platelet contamination, as it may be difficult for the optical

sensor associated with the plasma outlet line to distinguish between platelets and lipemic plasma.

2. Predictive Spill Prevention and Control

In an alternative embodiment, the hematocrit of the fluid exiting the red blood cell outlet **544** may be monitored by an optical sensor. The hematocrit is indicative of the radial location of the interface **554**, so the detected hematocrit may be employed to assess the location of the interface **554** and change the chamber spin speed to avoid a spill condition. For example, if the detected hematocrit is greater than a particular value, it is an indication that the red blood cell layer in the chamber **500** is too thick, which may create the risk of an overspill condition. On the other hand, if the detected hematocrit is less than a particular value, it is an indication that the red blood cell layer in the chamber **500** is too thin, which may create the risk of an underspill condition. Increasing the chamber spin speed moves the interface **554** closer toward the high-g wall **504** (for responding to a high hematocrit reading and avoiding an overspill) while decreasing the chamber spin speed moves the interface **554** closer toward the low-g wall **502** (for responding to a low hematocrit reading and avoiding an underspill).

The reactive and predictive spill control systems may also be practiced together, for example, with the detected hematocrit being the primary means of controlling the location of the interface **554** and the biased pumping system being used as a back-up.

C. Return Stage

The separation and collection stage typically will continue until the desired amount of plasma and red blood cells have been collected or are present in the system. For example, in one embodiment, the amount of red blood cells includes the packed red cells in the red blood cell collection container **578**, the red blood cells present in the whole blood remaining in the in-process container **594**, and the red blood cells in the chamber **500** that have yet to be collected.

Depending on the target yields, the target amount of one component (typically red blood cells) may be present in the system before the target amount of the other component (typically plasma) has been collected, so the duration of the separation and collection stage will be determined by the time required to collect one of the components. In the event that the target volume of one of the components (e.g., red blood cells) is obtained before the other (or is expected to be obtained before the other), that component may be periodically returned to the blood source during the separation and collection stage. Most advantageously, such return phase is carried out while blood is being pumped from the in-process container **594** to the chamber **500**, as described above with regard to the Red Blood Cell/Platelet/Plasma collection procedure, to allow for simultaneous processing and fluid return.

D. Final Return and Collection Stage

With the target amounts of red blood cells and plasma present in the system, the system may move into a final return and collection stage. In one embodiment, any plasma remaining in the chamber **500** is first returned to the blood source. This is achieved by maintaining the chamber at a "hard spin" speed while operating the in-process pump PU**1** to convey blood from the in-process container **594**, through the cassette flow circuit **600** (in through port PO**1** and out through port PO**5**), and into the chamber **500** via the whole blood inlet **510**, as shown in FIG. **67**A. The blood entering the chamber **500** forces plasma out of the plasma outlet **542**, into the cassette flow circuit **600** via port PO**6**, and then out cassette port PO**8** to the blood source by operation of the plasma pump PU**2** and the donor pumps PU**3** and PU**4**.

Returning the plasma to the blood source has the effect of moving the interface closer to the low-g wall **502** of the chamber **500**. To return the interface layer to the blood source, the spin speed of the chamber **500** is reduced while the in-process pump PU**1** continues to convey blood from the in-process container **594**, through the cassette flow circuit **600** (in through port PO**1** and out through port PO**5**), and into the chamber **500** via the inlet **510**, as shown in FIG. **67**A. At the lower spin speed, the interface will be close to the low-g wall **502**, so the blood entering the chamber **500** forces the interface out of the plasma outlet **542**, through the cassette flow circuit **600** (in through port PO**6** and out through port PO**8**), and to the blood source by operation of the plasma pump PU**2** and the donor pumps PU**3** and PU**4**. This "flush interface" phase continues until the in-process container **594** falls below a set volume, as may be determined by a weight sensor associated with the in-process container **594**. In one embodiment, the "flush interface" phase continues until the in-process container **594** is empty.

When the interface has been flushed from the chamber **500**, the volume of packed red cells in the red blood cell collection container **578** is assessed to determine whether there are any excess red blood cells in the system. If so, the in-process pump PU**1** is stopped, while the plasma pump PU**2** and the donor pumps PU**3** and PU**4** continue to operate, thereby pulling some packed red cells from the red blood cell collection container **578**, through the cassette flow circuit **600** (in through port PO**2** and out through port PO**7**), and into the chamber **500** via the red blood cell outlet **544**, as shown in FIG. **67**B. The red blood cells entering the chamber **500** force excess red blood cells in the chamber **500** out the plasma outlet **542**, though the cassette flow circuit **600** (in through port PO**6** and out through port PO**8**), to be returned to the blood source. It will be appreciated that the hematocrit of the packed red cells entering the chamber **500** from the red blood cell collection container **578** is greater than that of the red blood cells exiting the chamber **500**, thereby effectively increasing the hematocrit of the fluid in the chamber **500**.

Next, the volume of plasma in the plasma collection container **576** is assessed to determine whether there is any excess plasma in the system. If so, the plasma pump PU**2** is stopped, while the donor pumps PU**3** and PU**4** continue to operate, and the flow path through the cassette **592** is modified to direct any excess plasma from the plasma collection container **576**, through the cassette flow circuit **600** (in through port PO**3** and out through port PO**8**), and to the blood source, entirely bypassing the chamber **500** to avoid lowering the hematocrit of the fluid therein. This phase is illustrated in FIG. **67**C. The blood source may be disconnected from the system at this time.

Next, air from the empty in-process container **594** is pumped through the cassette flow circuit **600** (in through port PO**1** and out through port PO**5**) and into the chamber **500** by the in-process pump PU**1**, as shown in FIG. **67**D. The valves VAL**17** and VAL**19** associated with the plasma outlet port PO**6** are closed, thereby causing the air entering the chamber **500** to force the red blood cells therein out the red blood cell outlet **544**, through the cassette flow circuit **600** (in through port PO**7** and out through port PO**2**), and to the red blood cell collection container **578**. This phase continues until the red blood cells in the chamber **500** have been conveyed to the red blood cell collection container **578**, which may be identified

when the weight sensor associated with the red blood cell collection container **578** stops registering an increase in volume.

When the red blood cells have been conveyed from the chamber **500** to the red blood cell collection container **578**, the valve VAL**21** associated with the red blood cell outlet port PO**7** is closed and valve VAL**17** is opened, thereby effectively re-opening the plasma outlet port PO**6**, as shown in FIG. **67**E. Air is still being pumped into the chamber **500** from the in-process container **594**, and the air pumped through the chamber **500** is directed out the plasma outlet **542** and associated plasma outlet port PO**6**, thereby flushing any red blood cells in the plasma pump PU**2** or outlet line to the red blood cell collection container **578** (via port PO**2**) and completing collection of the red blood cells. If the blood source is still attached to the system, saline from a saline container may be pumped to the blood source to flush any blood components in the return line (typically red blood cells) to the blood source, and then the blood source is finally disconnected from the system.

E. Flush Stage

The above final return and collection stage may be replaced by a conditional "flush" stage that is employed if the collection procedure is stopped prematurely or otherwise interrupted.

The "flush" stage operates to return fluid to the blood source. In one embodiment, the chamber spin speed is ramped down to zero while blood from the in-process container **594** is conveyed to the blood source and excess red blood cells and plasma are returned from their respective collection container, with the material being returned using the donor pumps PU**3** and PU**4** of the cassette **592**. Most advantageously, the contents of the containers are returned to the blood source while bypassing the chamber **500**, which can be achieved by properly programming the valves VAL**1**-VAL**26** of the cassette **592**. If the plasma or red blood cell level is below the target volume (e.g., if the procedure was stopped prematurely), the operator may be given the option to convey the entire contents of the associated collection container to the blood source. Alternatively, the system may attempt to salvage some of the components by retaining an amount less than the target volume, such as by retaining one unit of a component after an interruption prevents collection of the targeted two units.

When the chamber **500** has stopped spinning, the system moves to an "air flush" phase to begin flushing any excess fluid remaining in the system to the blood source. In this phase, the in-process pump PU**1** conveys air from the in-process container **594**, through the cassette flow circuit **600** (in through port PO**1** and out through port PO**5**), and into the chamber **500** (FIG. **68**). The air forces some (about half) of the contents of the chamber **500** out of the red blood cell outlet **544**, through the cassette flow circuit **600** (entering via port PO**7**), before the donor pumps PU**3** and PU**4** are operated to return the flushed contents to the blood source (via port PO**8**).

Next, the various pumps are stopped and the chamber spin speed is increased to a "flush chamber" speed of, for example, about 1000 RPM. When the spin speed has reached the target level, the above "air flush" phase (FIG. **68**) is repeated to flush more of the contents of the chamber **500** to the blood source. This may be followed by a "saline return" stage, whereby the donor pumps PU**3** and PU**4** of the cassette **592** pump saline from a saline container (not illustrated) to the blood source, thereby flushing cells in the tubing back to the blood source.

However, if the contents of the plasma collection container **576** were previously returned to the blood source (e.g., when the decision has been made to not salvage any of the collected plasma), the "saline return" stage may be preceded by an additional "air flush" phase. Such a third "air flush" phase is illustrated in FIGS. **69**A-**69**C. First, the above "air flush" phase is repeated, with the contents of the chamber **500** being flushed through the cassette flow circuit **600** (in through port PO**7** and out through port PO**3**) to the plasma collection container **576**, rather than being returned to the blood source (FIG. **69**A). This additional "air flush" phase substantially empties the chamber **500**.

Next, saline is pumped from a saline container, through the cassette flow circuit **600** (in through port PO**13** and out through port PO**3**), and into the plasma collection container **576** to prime the flow path to the plasma collection container **576** (FIG. **69**B).

Finally, the contents of the plasma collection container **576** are pumped through the cassette flow circuit **600** (in through port PO**3** and out through port PO**8**) and returned to the blood source (FIG. **69**C). Thereafter, the blood source may be disconnected from the system.

F. Filtration Stage

If at least one of the collected components (i.e., plasma or packed red cells) is being retained, the final return and collection of the "flush" stage may be followed by a leukoreduction stage. As shown in FIG. **66**, the disposable set **624** may include a red blood cell storage container **586** and at least one plasma storage container **630**. Each storage container includes an associated in-line leukoreduction filter **590**/**626**, such that the component is filtered as it is pumped from the collection container to the storage container by the cassette **592**. The leukoreduction of the packed red cells and/or plasma can be understood with reference to the corresponding stage of the Red Blood Cell/Platelet/Plasma collection procedure, described above.

X. Other Blood Processing Functions

The many features of the present subject matter have been demonstrated by describing their use in separating whole blood into component parts for storage and blood component therapy. This is because the present subject matter is well adapted for use in carrying out these blood processing procedures. It should be appreciated, however, that the described features equally lend themselves to use in other blood processing procedures.

For example, the systems and methods described, which make use of a programmable cassette in association with a blood processing chamber, can be used for the purpose of washing or salvaging blood cells during surgery, or for the purpose of conducting therapeutic plasma exchange, or in any other procedure where blood is circulated in an extracorporeal path for treatment.

It will be understood that the embodiments described above are illustrative of some of the applications of the principles of the present subject matter. Numerous modifications may be made by those skilled in the art without departing from the spirit and scope of the claimed subject matter, including those combinations of features that are individually disclosed or claimed herein. For these reasons, the scope hereof is not limited to the above description but is as set forth in the following claims.

The invention claimed is:

1. A blood separation method comprising:
processing blood in a device to separate a blood component from the blood;
conveying fluid containing said blood component from the device by an outlet line;
optically measuring the blood component in the outlet line;
calculating a blood component pre-count, based at least in part on the optical measurement of the blood component in the outlet line;
ceasing said calculating; and
processing additional blood in the device after ceasing said calculating wherein said blood component is platelets.

2. The method of claim 1, further comprising reducing the amount of plasma in the device, while retaining substantially all of the platelets in the device, prior to said conveying fluid containing said blood component from the device by the outlet line.

3. The method of claim 1, wherein said conveying fluid containing said blood component from the device by the outlet line comprises circulating a fluid containing platelets from the device through the outlet line and then back into the device, and wherein said optically measuring includes optically measuring the platelets in the outlet line while simultaneously circulating the fluid containing platelets from the device through the outlet line and then back into the device.

4. A blood separation method comprising:
processing blood in a device to separate platelets from the blood;
circulating a fluid containing platelets from the device through an outlet line and then back into the device while simultaneously optically measuring the platelets in the outlet line;
calculating a current platelet yield, a platelet pre-count, the volume of blood to process to collect a target amount of platelets, and/or the processing time required to collect a target amount of platelets, based at least in part on the optical measurement of the platelets in the outlet line;
ceasing said calculating; and
processing additional blood in the device after ceasing said calculating, wherein said circulating the fluid containing platelets from the device through the outlet line and then back into the device is repeated until the fluid containing platelets is substantially uniform.

5. A blood separation method comprising:
processing blood in a device to separate platelets from the blood;
conveying fluid containing platelets from the device by an outlet line;
optically measuring the platelets in the outlet line;
calculating a current platelet yield, a platelet pre-count, the volume of blood to process to collect a target amount of platelets, and/or the processing time required to collect a target amount of platelets, based at least in part on the optical measurement of the platelets in the outlet line;
ceasing said calculating; and
processing additional blood in the device after ceasing said calculating, wherein
said processing blood in a device includes spinning the device to separate platelets from the blood, and
said calculating a current platelet yield includes comparing the calculated platelet yield to a target and, if the calculated platelet yield exceeds the target, spinning the device at a greater speed to reduce the amount of platelets in the outlet line or, if the calculated platelet yield falls below the target, spinning the device at a slower speed to increase the amount of platelets in the outlet line.

6. The method of claim 1, further comprising conveying separated platelets and an amount of platelet storage fluid to a platelet collection container, wherein said amount of platelet storage fluid is based, at least in part, on the optical measurement of the platelets in the outlet line.

7. A blood separation method comprising:
processing blood in a device having a first outlet line and a second outlet line to separate platelets from the blood;
conveying fluid containing platelets from the device by an outlet line;
optically measuring the platelets in the outlet line;
calculating a current platelet yield, a platelet pre-count, the volume of blood to process to collect a target amount of platelets, and/or the processing time required to collect a target amount of platelets, based at least in part on the optical measurement of the platelets in the outlet line;
ceasing said calculating; and
processing additional blood in the device after ceasing said calculating, wherein
said processing blood in a device comprises
spinning the device at a separation speed sufficient to separate the blood in the device into a red blood cell layer, a plasma layer, and a layer containing platelets;
conveying a flow of the separated plasma from the device through one of the outlet lines and conveying a flow of the separated red blood cells from the device through the other outlet line, while retaining substantially all of the layer containing platelets in the device;
spinning the device in alternating directions at a relatively low mixing speed to mix the separated plasma, the separated red blood cells, and the layer containing platelets remaining in the device; and
spinning the device at a harvest speed that is less than the separation speed to separate the mixed plasma, red blood cells, and layer containing platelets into a layer of red blood cells and a layer containing plasma and platelets;
said conveying fluid containing platelets from the device by the outlet line comprises circulating the layer containing plasma and platelets from the device through the first outlet line and then back into the device to reduce the number of red blood cells and leukocytes in the layer containing plasma and platelets; and
said optically measuring the platelets in the outlet line comprises optically measuring the platelets in the first outlet line while simultaneously circulating the layer containing plasma and platelets from the device through the first outlet line and then back into the device.

8. The method of claim 7, wherein said circulating the layer containing plasma and platelets from the device through the first outlet line and then back into the device is repeated until the layer containing plasma and platelets is substantially uniform.

9. The method of claim 7, wherein said calculating a current blood component yield includes comparing the calculated blood component yield to a target and, if the calculated blood component yield exceeds the target, spinning the device at a greater speed to reduce the amount of platelets in the first outlet line or, if the calculated blood component yield falls below the target, spinning the device at a slower speed to increase the amount of platelets in the first outlet line.

10. The method of claim 7, further comprising conveying separated platelets and an amount of platelet storage fluid to a platelet collection container, wherein said amount of platelet storage fluid is based, at least in part, on the optical measurement of the platelets in the first outlet line.

* * * * *