US005132992A

United States Patent [19]

Yurt et al.

[11] Patent Number: 5,132,992

[45] Date of Patent: Jul. 21, 1992

[54] AUDIO AND VIDEO TRANSMISSION AND RECEIVING SYSTEM

[76] Inventors: Paul Yurt, P.O. Box 676, Times Square Station, New York, N.Y. 10108; H. Lee Browne, Two Soundview Dr., Greenwich, Conn. 06830

[21] Appl. No.: 637,562

[22] Filed: Jan. 7, 1991

[51] Int. Cl.[5] H04N 1/00

[52] U.S. Cl. 375/122; 358/86; 455/5.1

[58] Field of Search 375/122; 358/335, 133, 358/86, 84, 102, 903; 360/8, 9.1, 14.1; 455/3, 4, 5, 2

[56] References Cited

U.S. PATENT DOCUMENTS

3,599,178	8/1971	Jackson et al.	340/172.5
3,746,780	7/1973	Stetten et al.	178/6.6 A
4,009,344	2/1977	Flemming	179/15 BS
4,009,346	2/1977	Parker et al.	179/15 AQ
4,028,733	6/1977	Ulicki	358/86
4,062,043	12/1977	Zeidler et al.	358/86
4,071,697	1/1978	Bushnell et al.	179/2 TV
4,122,299	10/1978	Cannon	178/26 A
4,381,522	4/1983	Lambert	358/86
4,400,717	8/1983	Southworth et al.	358/13
4,450,477	5/1984	Lovett	358/86
4,506,387	3/1985	Walter	455/612
4,518,989	5/1985	Yabiki et al.	358/86
4,521,806	6/1985	Abraham	358/86
4,533,936	8/1985	Tiemann et al.	358/12
4,538,176	8/1985	Nakajima et al.	358/86
4,567,512	1/1986	Abraham	358/86
4,590,516	5/1986	Abraham	358/86
4,679,079	7/1987	Catros et al.	358/135
4,688,246	8/1987	Eilers et al.	380/9
4,734,765	3/1988	Okada et al.	358/102
4,755,872	7/1988	Bestler et al.	358/86
4,763,191	8/1988	Gordon et al.	358/86
4,785,349	11/1988	Keith et al.	358/136
4,807,023	2/1989	Bestler et al.	358/86
4,833,710	5/1989	Hirashima	380/20
4,847,677	7/1989	Music et al.	358/13
4,868,653	9/1989	Golin et al.	358/133
4,890,320	12/1989	Monslow et al.	380/10
4,907,081	3/1990	Okamura et al.	358/133
4,914,508	4/1990	Music et al.	358/13
4,920,432	4/1990	Eggers et al.	360/33.1
4,937,821	6/1990	Boulton	370/124
4,947,244	8/1990	Fenwick et al.	358/86
4,949,169	8/1990	Lumelsky et al.	358/86
4,949,187	8/1990	Cohen	358/335
4,963,995	10/1990	Lang	358/335
5,032,927	7/1991	Watanabe et al.	358/133 X

OTHER PUBLICATIONS

Ernie Ohrenstein, "Supercomputers Seek High Throughput and Expandable Storage", Computer Technology Review, IEEE Spectrum, May, 1990, pp. 33–43.

Patricia A. Morreale, et al., "Metropolitan-Area Networks," IEEE Spectrum, May 1990, pp. 40–43.

Primary Examiner—Stephen Chin

Attorney, Agent, or Firm—Finnegan, Henderson, Farabow, Garrett & Dunner

[57] ABSTRACT

A system of distributing video and/or audio information employs digital signal processing to achieve high rates of data compression. The compressed and encoded audio and/or video information is sent over standard telephone, cable or satellite broadcast channels to a receiver specified by a subscriber of the service, preferably in less than real time, for later playback and optional recording on standard audio and/or video tape.

58 Claims, 12 Drawing Sheets

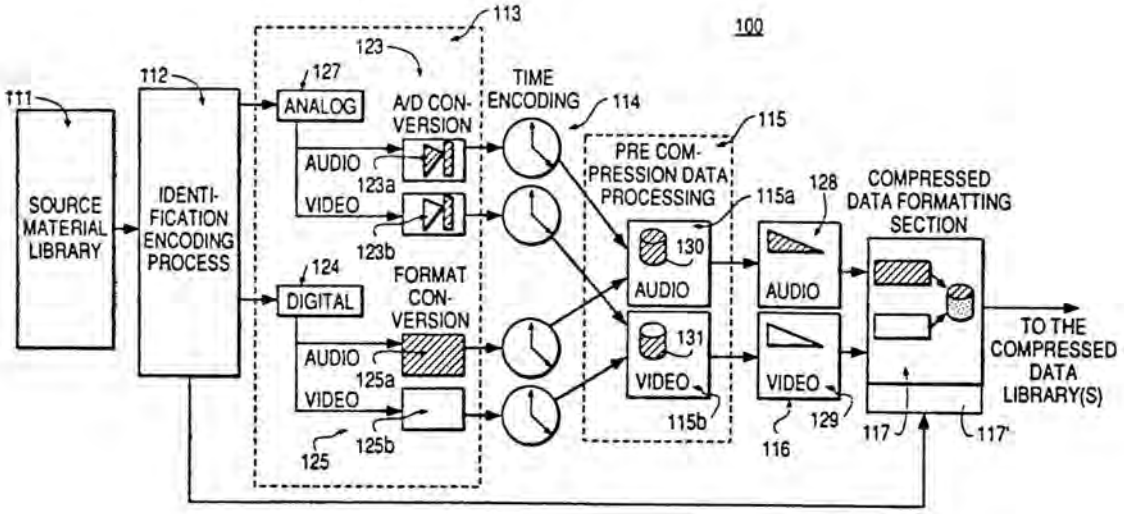

Amazon Web Services
EXHIBIT 1005

FIG. 1a

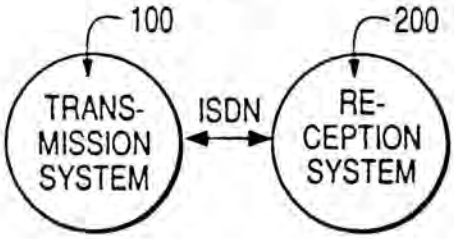

FIG. 1b

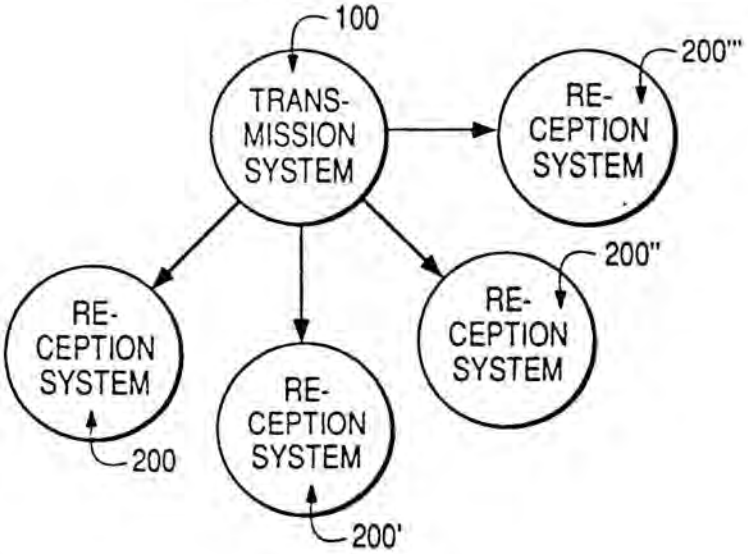

FIG. 1d

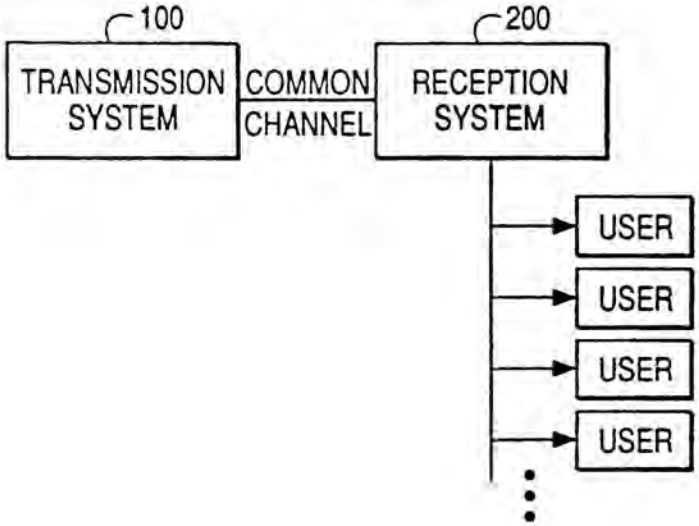

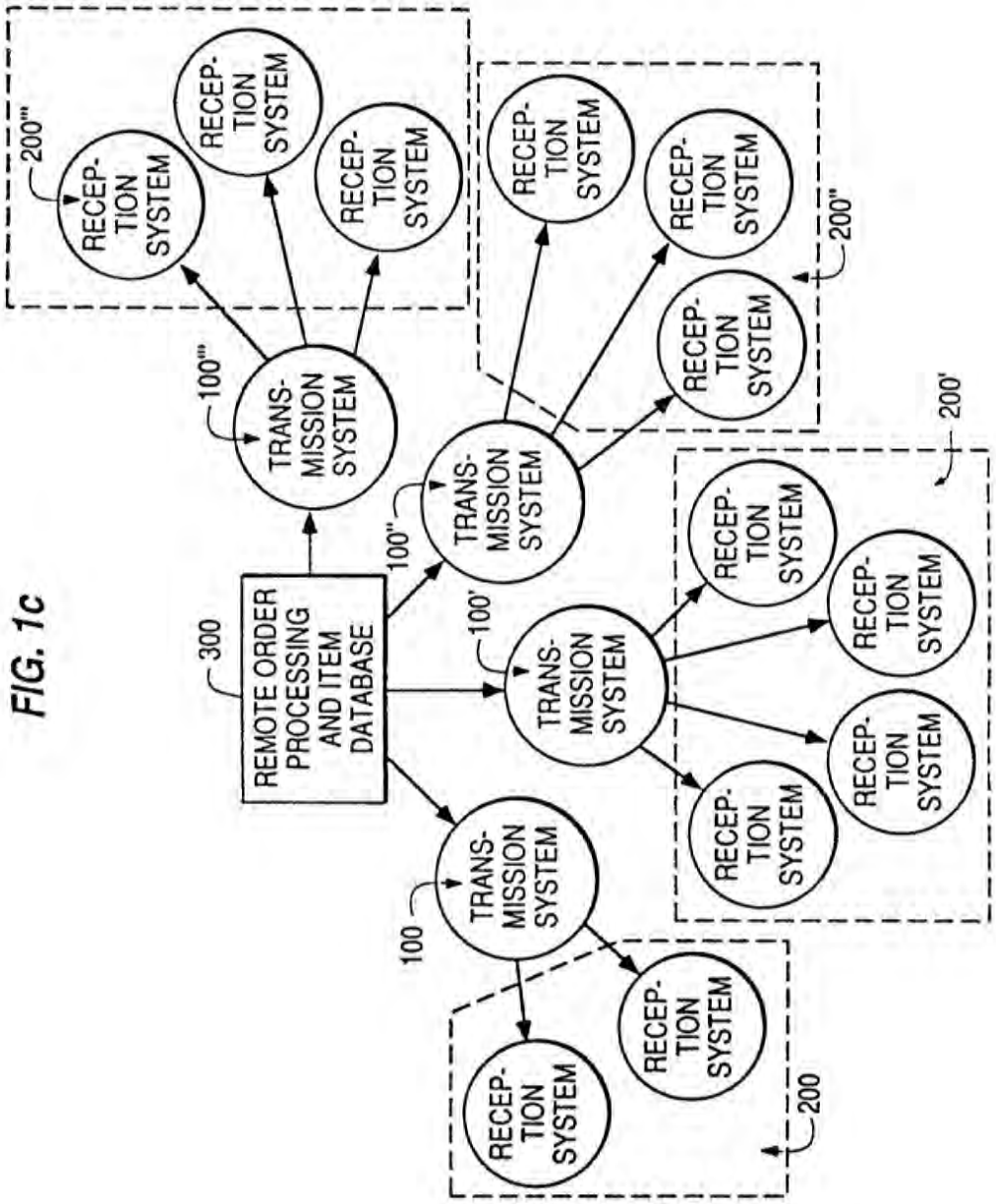
REMOTE ORDER PROCESSING AND ITEM DATABASE
300
TRANS-MISSION SYSTEM
100
TRANS-MISSION SYSTEM
100'
TRANS-MISSION SYSTEM
100''
TRANS-MISSION SYSTEM
100'''
RECEP-TION SYSTEM
200
RECEP-TION SYSTEM
200'
RECEP-TION SYSTEM
200''
RECEP-TION SYSTEM
200'''

FIG. 1c

FIG. 1e

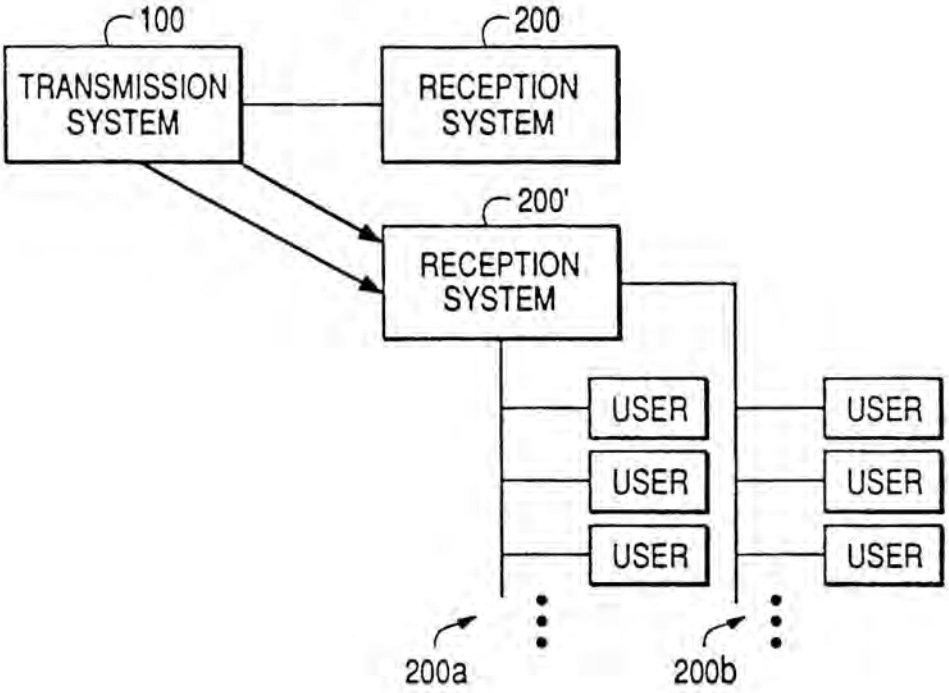
100
TRANSMISSION SYSTEM
200
RECEPTION SYSTEM
200'
RECEPTION SYSTEM
USER
USER
USER
USER
USER
USER
200a
200b

FIG. 1f

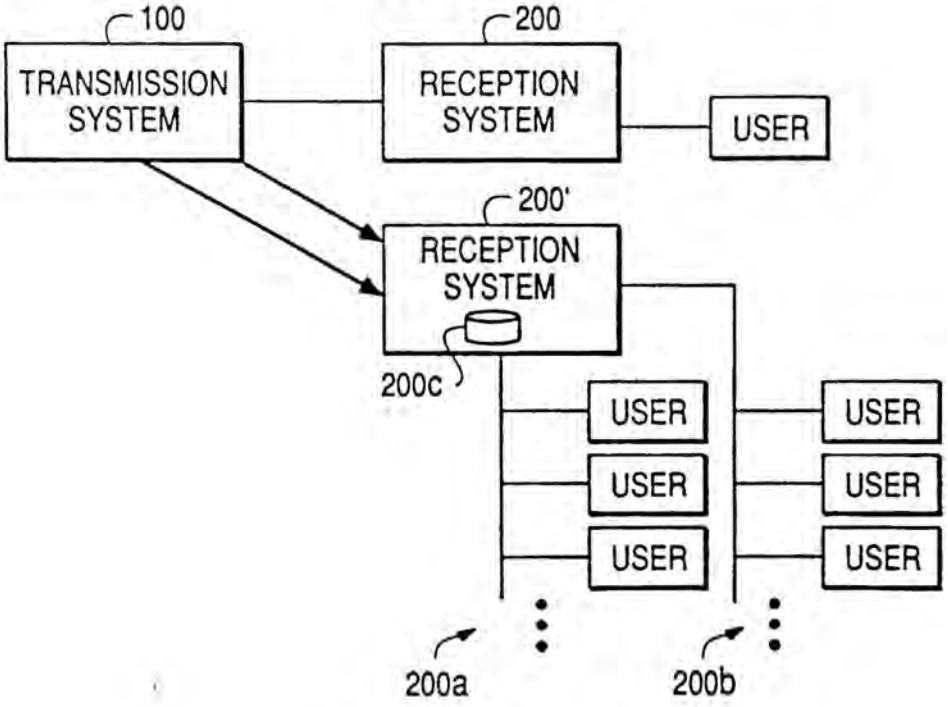
100
TRANSMISSION SYSTEM
200
RECEPTION SYSTEM
USER
200'
RECEPTION SYSTEM
200c
USER
USER
USER
USER
USER
USER
200a
200b

FIG. 1g

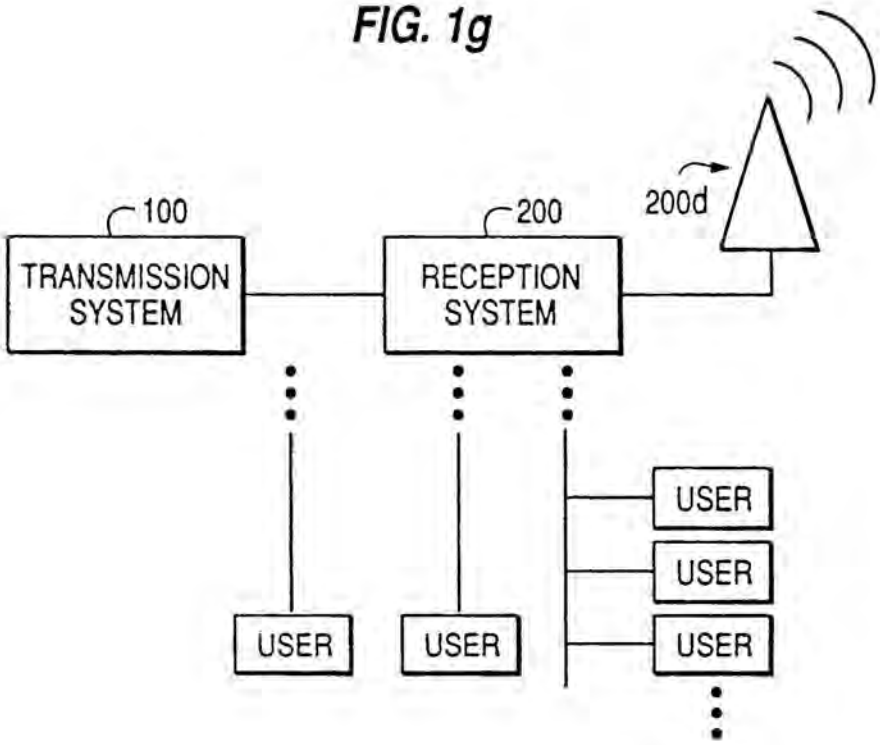
100
TRANSMISSION SYSTEM
200
RECEPTION SYSTEM
200d
USER
USER
USER
USER
USER
USER

FIG. 4

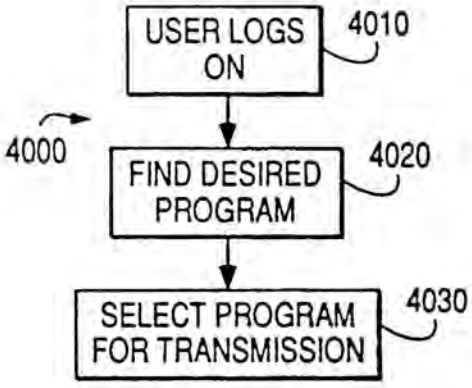
USER LOGS ON
4010
4000
FIND DESIRED PROGRAM
4020
SELECT PROGRAM FOR TRANSMISSION
4030

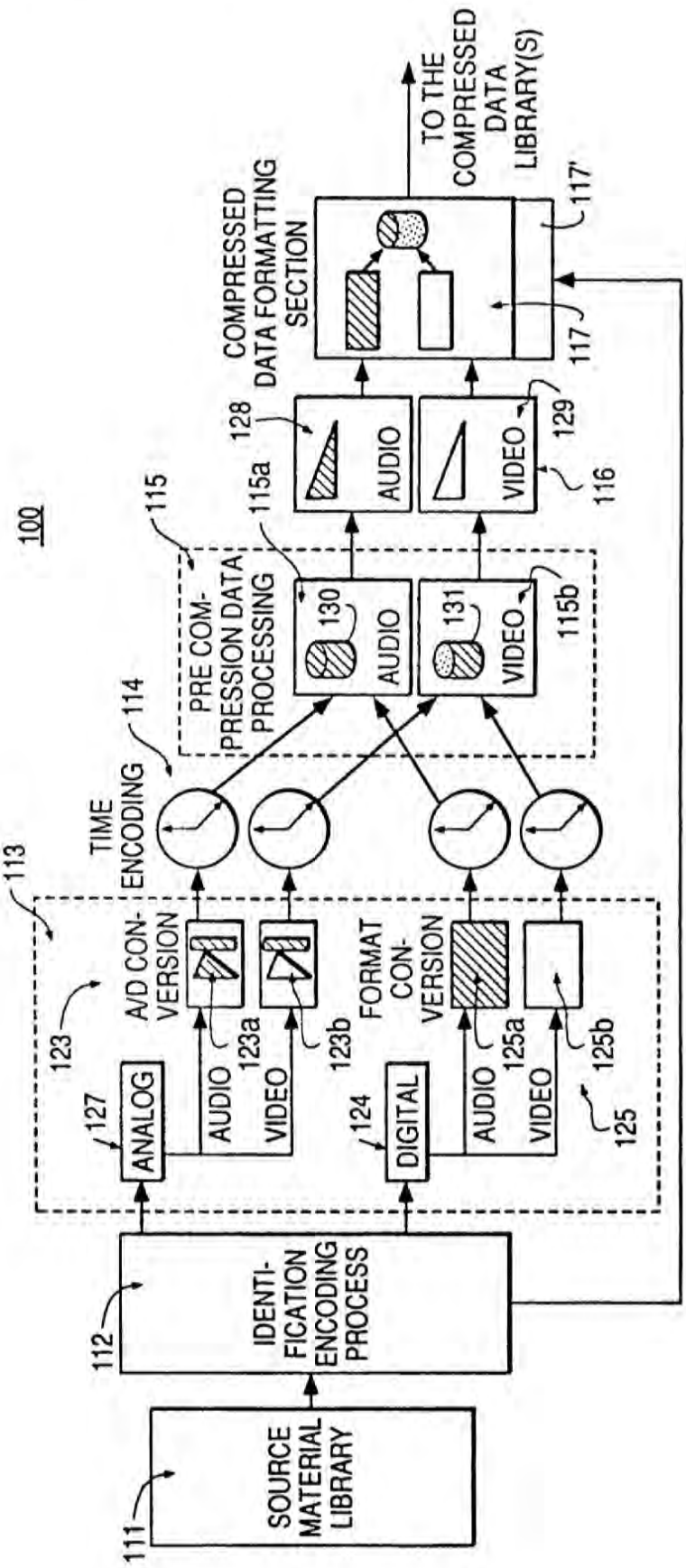
100
SOURCE MATERIAL LIBRARY
111
IDENTI-FICATION ENCODING PROCESS
112
113
123
ANALOG
127
AUDIO
VIDEO
A/D CON-VERSION
123a
123b
DIGITAL
124
AUDIO
VIDEO
FORMAT CON-VERSION
125a
125b
125
TIME ENCODING
114
PRE COM-PRESSION DATA PROCESSING
115
115a
130
AUDIO
131
VIDEO
115b
128
AUDIO
VIDEO
129
116
COMPRESSED DATA FORMATTING SECTION
117
117'
TO THE COMPRESSED DATA LIBRARY(S)

FIG. 2a

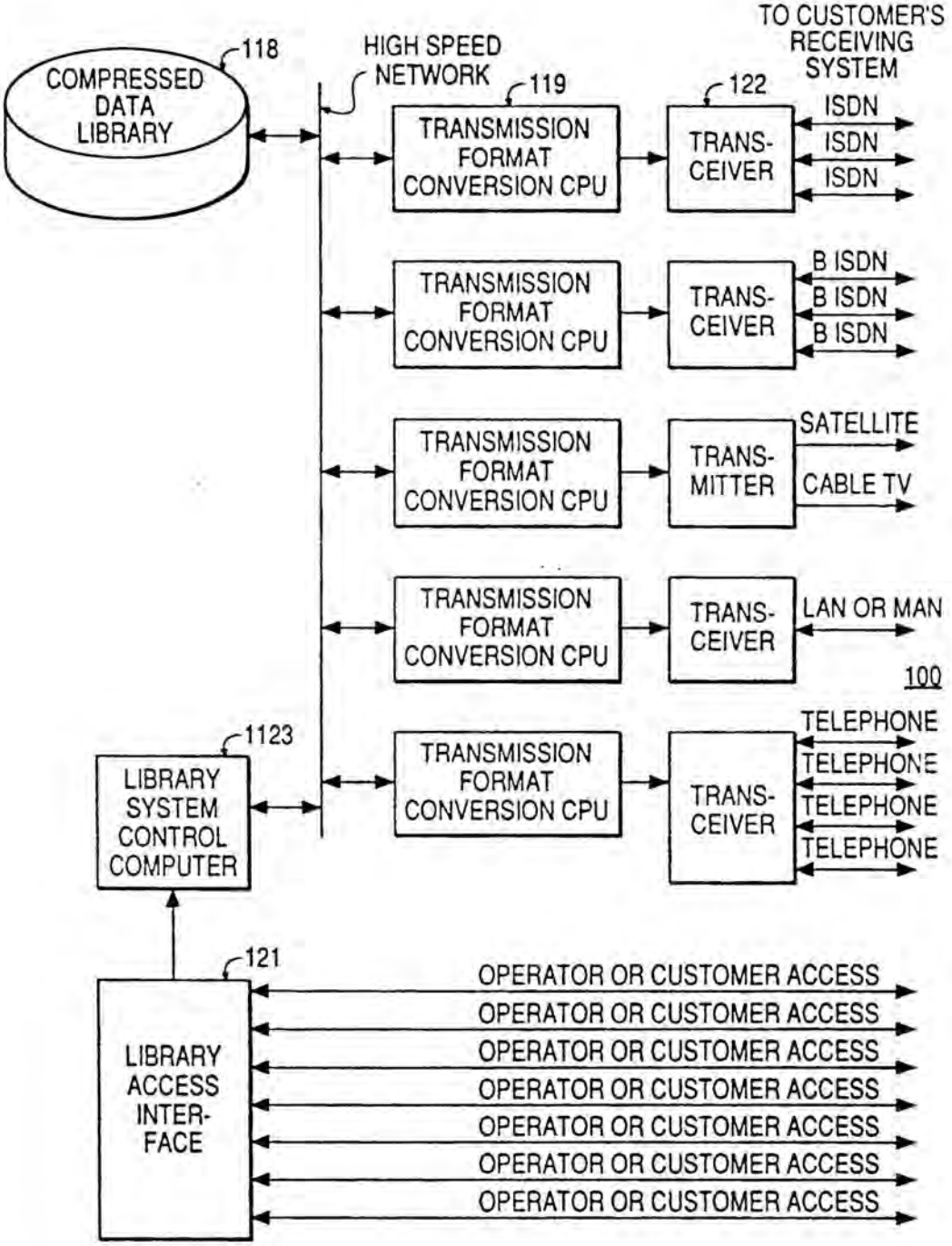
118
COMPRESSED DATA LIBRARY
HIGH SPEED NETWORK
119
TRANSMISSION FORMAT CONVERSION CPU
122
TRANS-CEIVER
TO CUSTOMER'S RECEIVING SYSTEM
ISDN
ISDN
ISDN
TRANSMISSION FORMAT CONVERSION CPU
TRANS-CEIVER
B ISDN
B ISDN
B ISDN
TRANSMISSION FORMAT CONVERSION CPU
TRANS-MITTER
SATELLITE
CABLE TV
TRANSMISSION FORMAT CONVERSION CPU
TRANS-CEIVER
LAN OR MAN
100
1123
LIBRARY SYSTEM CONTROL COMPUTER
TRANSMISSION FORMAT CONVERSION CPU
TRANS-CEIVER
TELEPHONE
TELEPHONE
TELEPHONE
TELEPHONE
121
LIBRARY ACCESS INTER-FACE
OPERATOR OR CUSTOMER ACCESS
OPERATOR OR CUSTOMER ACCESS
OPERATOR OR CUSTOMER ACCESS
OPERATOR OR CUSTOMER ACCESS
OPERATOR OR CUSTOMER ACCESS
OPERATOR OR CUSTOMER ACCESS
OPERATOR OR CUSTOMER ACCESS

FIG. 2b

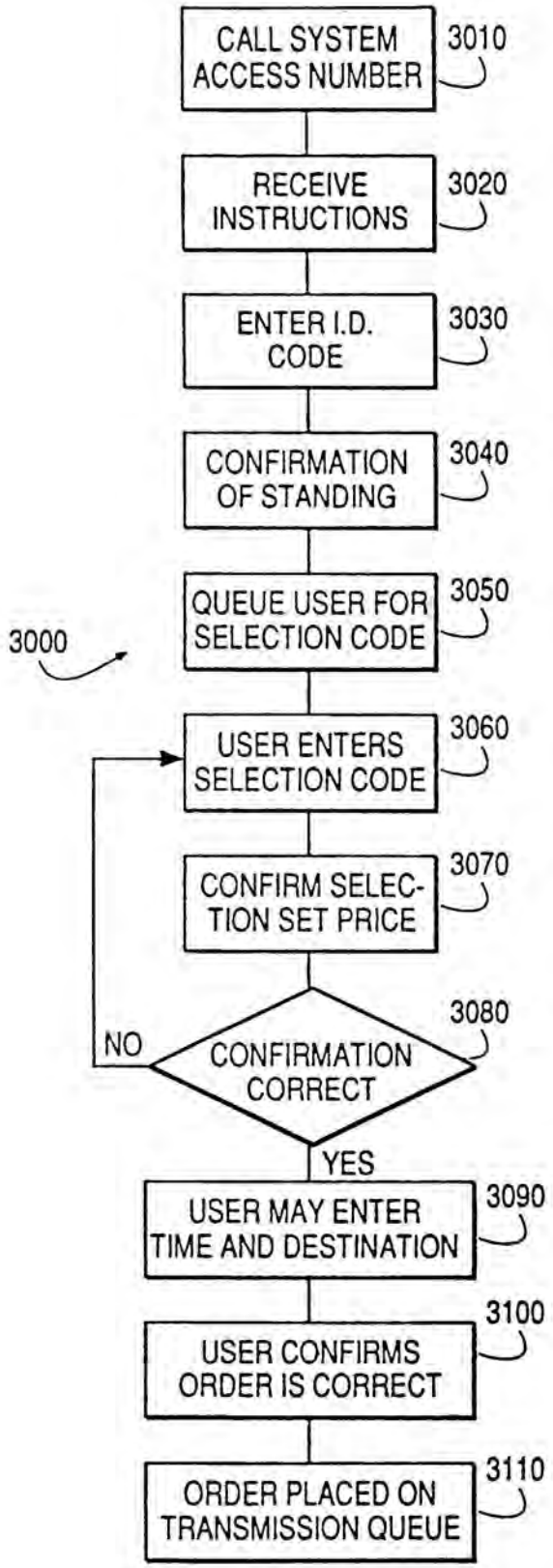
CALL SYSTEM ACCESS NUMBER
3010
RECEIVE INSTRUCTIONS
3020
ENTER I.D. CODE
3030
CONFIRMATION OF STANDING
3040
QUEUE USER FOR SELECTION CODE
3050
3000
USER ENTERS SELECTION CODE
3060
CONFIRM SELECTION SET PRICE
3070
3080
NO
CONFIRMATION CORRECT
YES
USER MAY ENTER TIME AND DESTINATION
3090
USER CONFIRMS ORDER IS CORRECT
3100
ORDER PLACED ON TRANSMISSION QUEUE
3110

FIG. 3

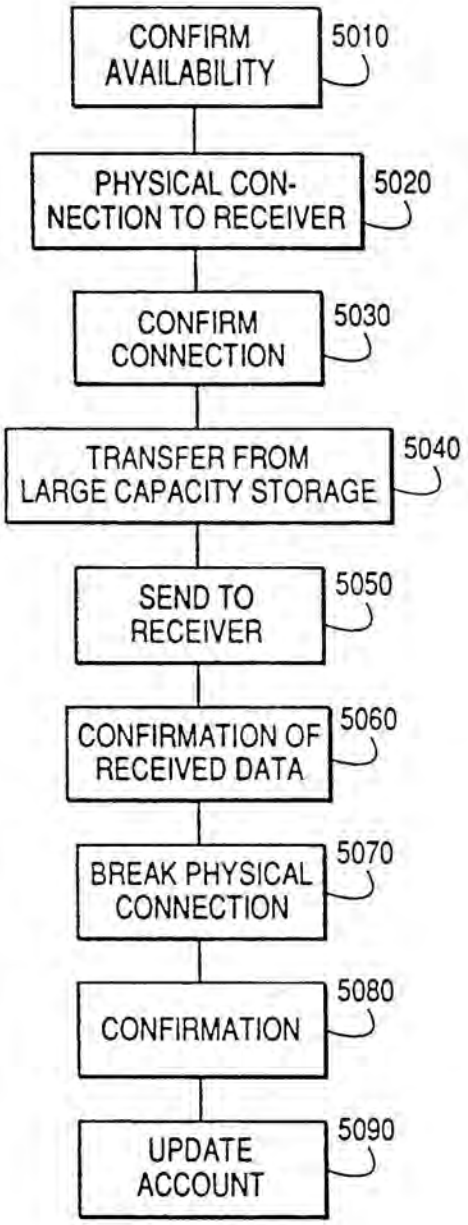
CONFIRM AVAILABILITY
5010
PHYSICAL CONNECTION TO RECEIVER
5020
CONFIRM CONNECTION
5030
TRANSFER FROM LARGE CAPACITY STORAGE
5040
SEND TO RECEIVER
5050
CONFIRMATION OF RECEIVED DATA
5060
BREAK PHYSICAL CONNECTION
5070
CONFIRMATION
5080
UPDATE ACCOUNT
5090

FIG. 5

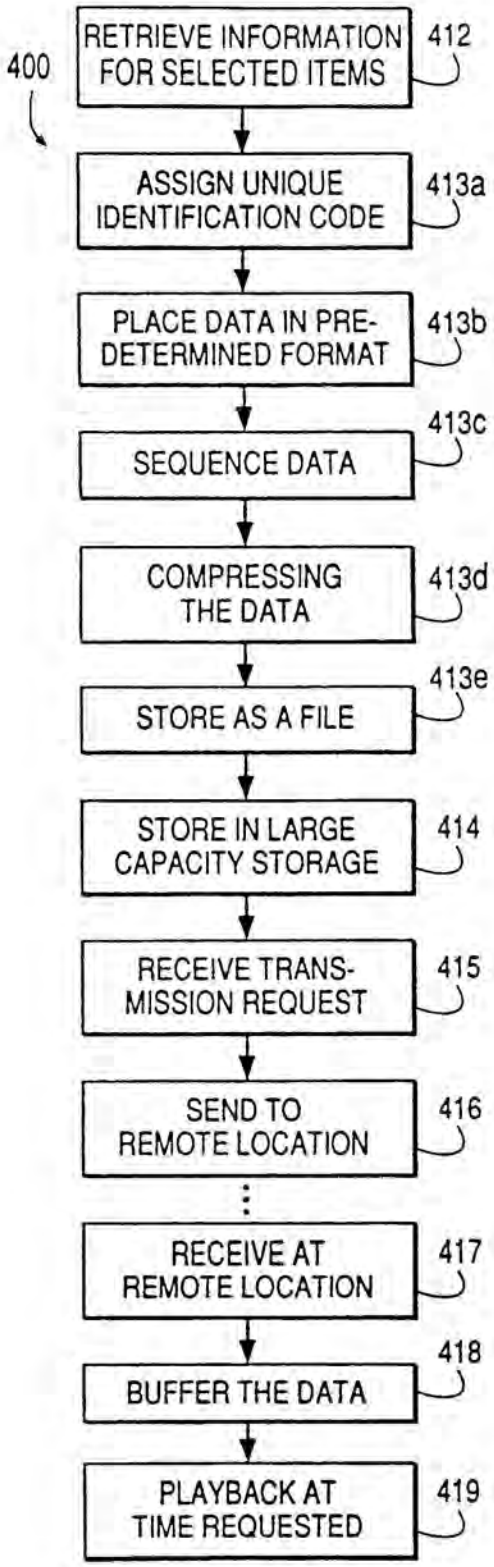
400
RETRIEVE INFORMATION FOR SELECTED ITEMS
412
ASSIGN UNIQUE IDENTIFICATION CODE
413a
PLACE DATA IN PRE-DETERMINED FORMAT
413b
SEQUENCE DATA
413c
COMPRESSING THE DATA
413d
STORE AS A FILE
413e
STORE IN LARGE CAPACITY STORAGE
414
RECEIVE TRANSMISSION REQUEST
415
SEND TO REMOTE LOCATION
416
RECEIVE AT REMOTE LOCATION
417
BUFFER THE DATA
418
PLAYBACK AT TIME REQUESTED
419

FIG. 7

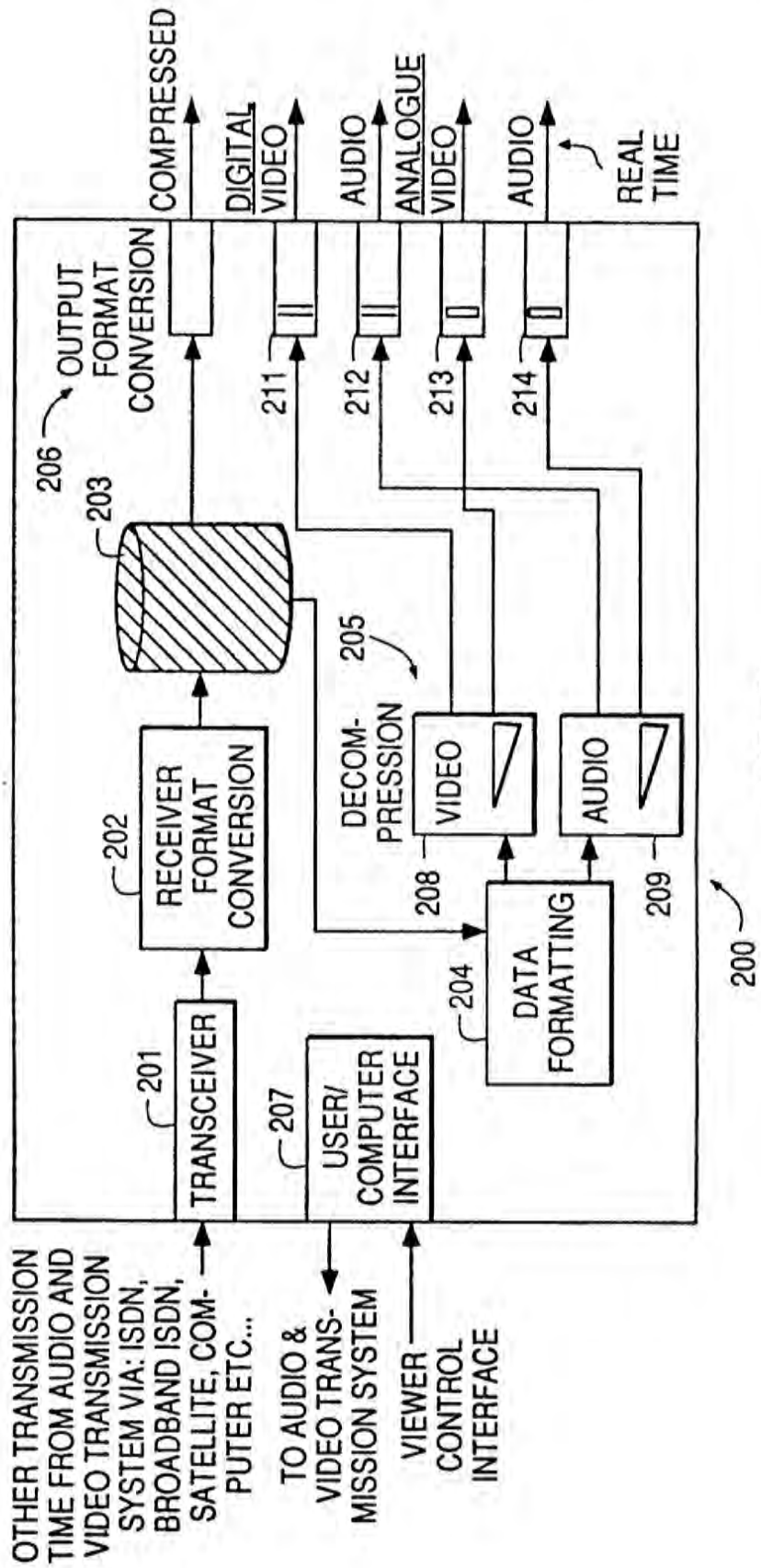
OTHER TRANSMISSION TIME FROM AUDIO AND VIDEO TRANSMISSION SYSTEM VIA: ISDN, BROADBAND ISDN, SATELLITE, COM-PUTER ETC...
TO AUDIO & VIDEO TRANS-MISSION SYSTEM
VIEWER CONTROL INTERFACE
201
TRANSCEIVER
202
RECEIVER FORMAT CONVERSION
203
206
OUTPUT FORMAT CONVERSION
207
USER/ COMPUTER INTERFACE
204
DATA FORMATTING
205
DECOM-PRESSION
208
VIDEO
209
AUDIO
211
212
213
214
COMPRESSED
DIGITAL VIDEO
AUDIO
ANALOGUE VIDEO
AUDIO
REAL TIME
200

FIG. 6

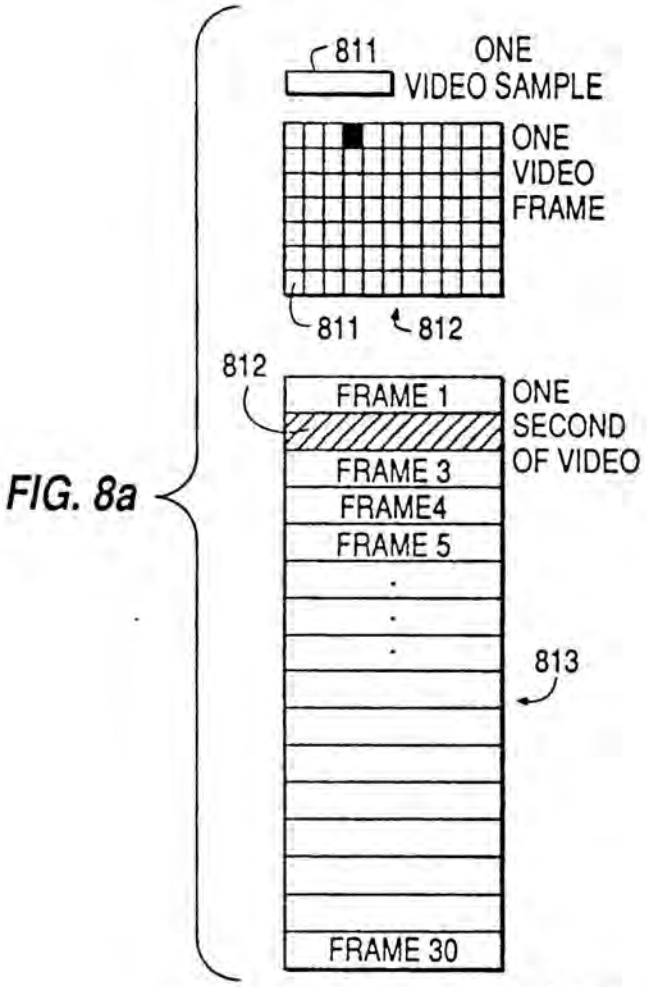
811
ONE
VIDEO SAMPLE
ONE
VIDEO
FRAME
811
812
812
FRAME 1
ONE
SECOND
OF VIDEO
FRAME 3
FRAME4
FRAME 5
813
FRAME 30

FIG. 8a

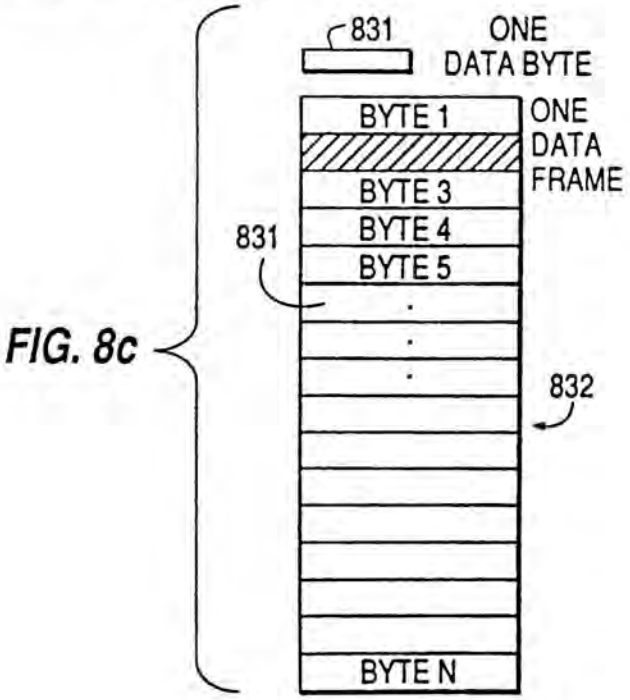
831
ONE
DATA BYTE
BYTE 1
ONE
DATA
FRAME
BYTE 3
BYTE 4
BYTE 5
831
832
BYTE N

FIG. 8c

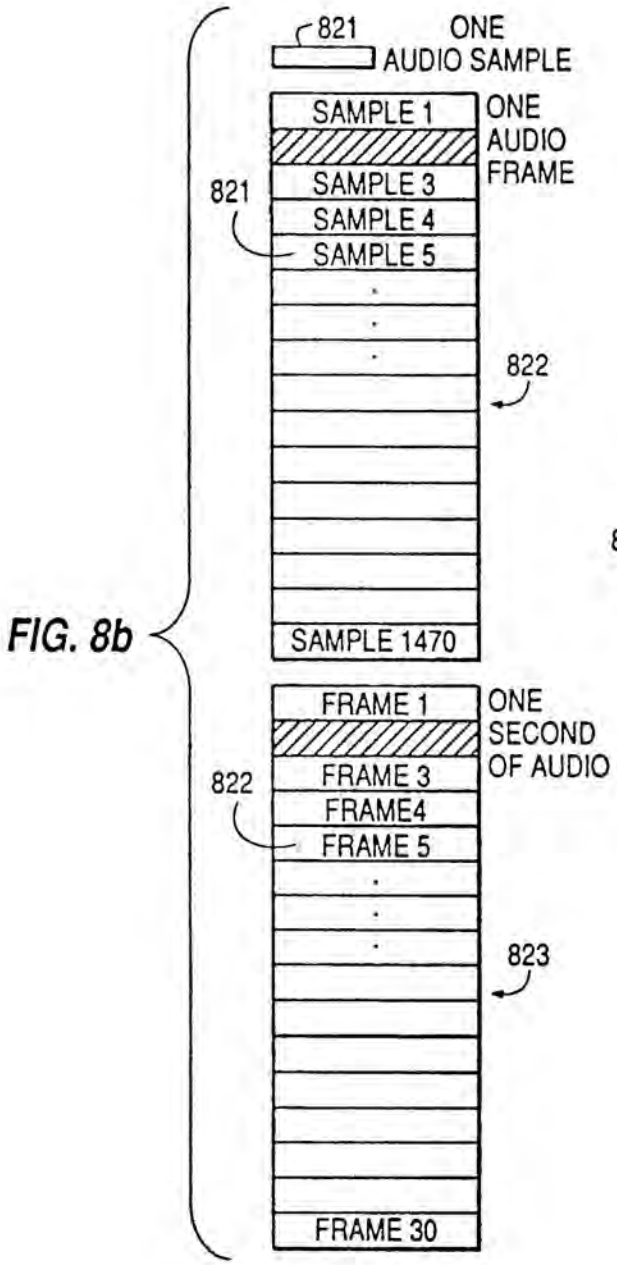
821
ONE AUDIO SAMPLE
SAMPLE 1
ONE AUDIO FRAME
SAMPLE 3
SAMPLE 4
SAMPLE 5
821
822
SAMPLE 1470
FRAME 1
ONE SECOND OF AUDIO
FRAME 3
FRAME4
FRAME 5
822
823
FRAME 30

FIG. 8b

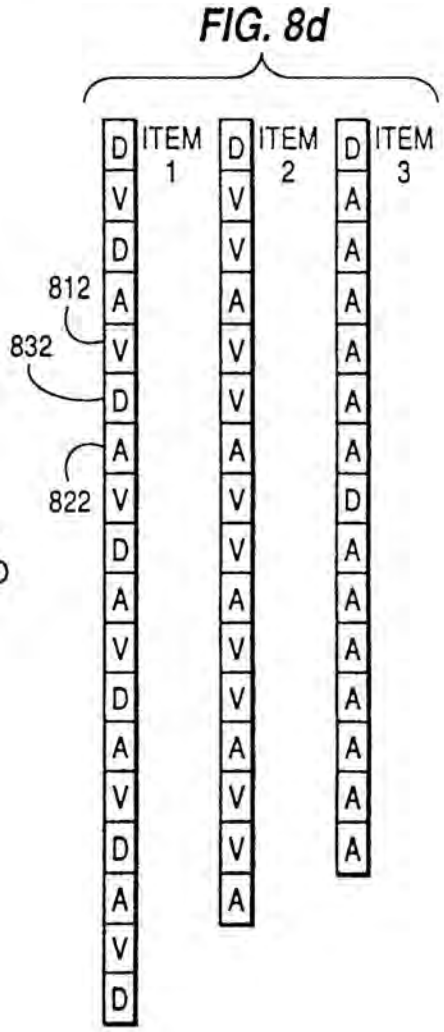
ITEM 1
ITEM 2
ITEM 3
812
832
822

FIG. 8d

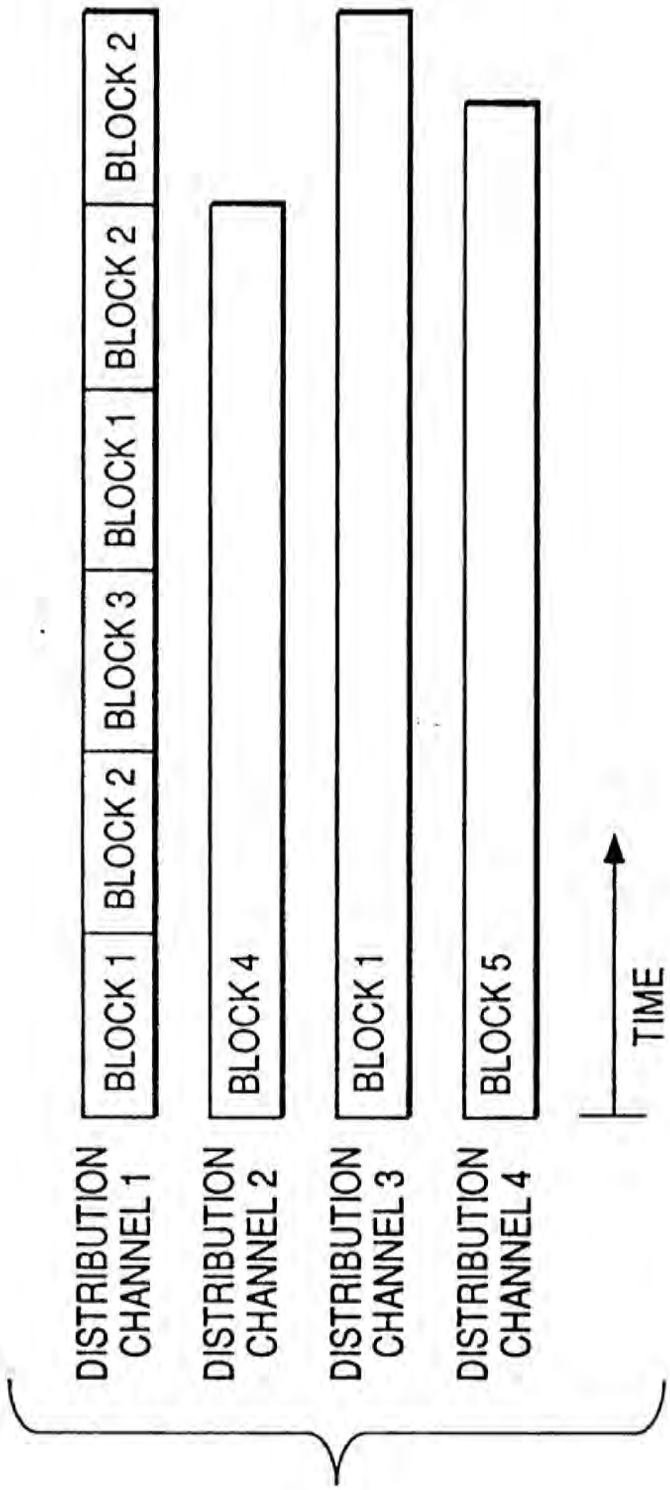
DISTRIBUTION CHANNEL 1
BLOCK 1
BLOCK 2
BLOCK 3
BLOCK 1
BLOCK 2
BLOCK 2
DISTRIBUTION CHANNEL 2
BLOCK 4
DISTRIBUTION CHANNEL 3
BLOCK 1
DISTRIBUTION CHANNEL 4
BLOCK 5
TIME

FIG. 8e

AUDIO AND VIDEO TRANSMISSION AND RECEIVING SYSTEM

BACKGROUND OF THE INVENTION

The present invention relates generally to an audio and video transmission and receiving system, and more specifically to such a system in which the user controls the access and the playback operations of selected material.

At the present time, only a video cassette recorder (VCR) or a laser disk player (LDP) allow a viewer to enjoy control over selection of particular audio/video material. Using either a VCR or an LDP requires the viewer to obtain a video tape either by rental or by purchase. Remote accessing of the material has not yet been integrated into an efficient system.

Several designs have been developed which provide the viewer with more convenient means of accessing material. One such design is disclosed in U.S. Pat. No. 4,506,387, issued to Walter. The Walter patent discloses a fully dedicated, multi-conductor, optical cable system that is wired to the viewer's premises. While the system affords the viewer some control over accessing the material, it requires that a location designated by the viewer be wired with a dedicated cable. The Walter system further requires the viewer be at that location for both ordering and viewing the audio/video material.

U.S. Pat. No. 4,890,320, issued to Monslow, describes a system which broadcasts viewer selected material to a viewer at a prescribed time. This system is limited in that it requires multiple viewers in multiple locations to view the audio/video material at the time it is broadcast, rather than allowing each viewer to choose his or her own viewing time. The system disclosed in Monslow also does not allow for the stop, pause, and multiple viewing functions of existing VCR technology.

U.S. Pat. No. 4,590,516, issued to Abraham, discloses a system that uses a dedicated signal path, rather than multiple common carriers, to transmit audio/video programming. The receiver has no storage capability. The system provides for only display functions, which limits viewing to the time at which the material is ordered. Like Monslow, the Abraham system does not allow for the stop, pause, and multiple viewing functions of existing VCR technology.

U.S. Pat. No. 4,963,995, issued to Lang, discloses an audio/video transceiver with the capability of editing and/or copying from one video tape to another using only a single tape deck. Lang does not disclose a system with one or more libraries wherein a plurality of system subscribers may access information stored in the film and tape library or libraries, and play back the selected information at a time and place selected by the subscriber.

It is therefore an object of the present invention to provide a user with the capability of accessing audio/video material by integrating both accessing and playback controls into a system that can use multiple existing communications channels.

It is a further object of the present invention to provide a picture and sound transmission system which allows the user to remotely select audio/video material from any location that has either telephone service or a computer.

A still further object of the present invention is to provide a picture and sound transmission system wherein the selected audio/video material is sent over any one of several existing communication channels in a fraction of real time to any location chosen by the user that has a specified receiver.

Another object of the present invention is to provide a picture and sound transmission system wherein the user may play back the selected audio/video material at any time selected by the user and retain a copy of the audio/video material for multiple playbacks in the future.

Another object of the present invention is to provide a picture and sound transmission system wherein the information requested by the user may be sent as only audio information, only video information, or as a combination of audio and video information.

Additional objects and advantages of the invention will be set forth in the description which follows, and in part will be obvious from the description, or may be learned by practice of the invention. The objects and advantages of the invention may be realized and obtained by means of the instrumentalities and combinations particularly pointed out in the appended claims.

SUMMARY OF THE INVENTION

To achieve the objects in accordance with the purposes of the present invention, as embodied and described herein, the transmission and receiving system for providing information to remote locations comprises source material library means prior to identification and compression; identification encoding means for retrieving the information for the items from the source material library means and for assigning a unique identification code to the retrieved information; conversion means, coupled to identification encoding means, for placing the retrieved information into a predetermined format as formatted data; ordering means, coupled to the conversion means, for placing the formatted data into a sequence of addressable data blocks; compression means, coupled to the ordering means, for compressing the formatted and sequenced data; compressed data storing means, coupled to the compression means, for storing as a file the compressed sequenced data received from the compression means with the unique identification code assigned by the identification encoding means; and transmitter means, coupled to the compressed data storing means, for sending at least a portion of a specific file to a specific one of the remote locations.

The present invention further comprises a distribution method responsive to requests identifying information to be sent from a transmission system to a remote location, the method comprising the steps of storing audio and video information in a compressed data form; requesting transmission, by a user, of at least a part of the stored compressed information to the remote location; sending at least a portion of the stored compressed information to the remote location; receiving the sent information at the remote location; buffering the processed information at the remote location; and playing back the buffered information in real time at a time requested by the user.

Additionally, the present invention comprises a receiving system responsive to a user input identifying a choice of an item stored in a source material library to be played back to the subscriber at a location remote from the source material library, the item containing information to be sent from a transmitter to the receiving system, and wherein the receiving system comprises

transceiver means for automatically receiving the requested information from the transmitter as compressed formatted data blocks; receiver format conversion means, coupled to the transceiver means, for converting the compressed formatted data blocks into a format suitable for storage and processing resulting in playback in real time; storage means, coupled to the receiver format conversion means, for holding the compressed formatted data; decompressing means, coupled to the receiver format conversion means, for decompressing the compressed formatted information; and output data conversion means, coupled to the decompressing means, for playing back the decompressed information in real time at a time specified by the user.

BRIEF DESCRIPTION OF THE DRAWINGS

The accompanying drawings, which are incorporated in and constitute a part of the specification, illustrate the presently preferred apparatus and method of the invention and, together with the general description given above and the detailed description of the preferred embodiment given below serve to explain the principles of the invention. In the drawings:

FIGS. **1***a*–**1***g* are high level block diagrams showing different configurations of the transmission and receiving system of the present invention;

FIGS. **2***a* and **2***b* are detailed block diagrams of preferred implementations of the transmission system of the present invention;

FIG. **3** is a flowchart of a preferred method of ordering a selection from a library in accordance with the present invention;

FIG. **4** is a flowchart of a preferred method of user request via a user interface of the present invention;

FIG. **5** is a flowchart of a preferred method of implementing a queue manager program of the present invention;

FIG. **6** is a block diagram of a preferred implementation of the receiving system of the present invention;

FIG. **7** is a flowchart of a preferred method of distribution of the present invention; and

FIGS. **8***a*–**8***e* are block diagrams of preferred implementations of data structures and data blocking for items in the audio and video distribution system of the present invention.

DESCRIPTION OF THE PREFERRED EMBODIMENTS

FIGS. **1***a*–**1***g* are high level block diagrams showing different configurations of the transmission and receiving system of the present invention. FIGS. **1***a*, **1***b*, **1***d*, **1***e*, **1***f*, and **1***g* each show transmission system **100**, described in more detail below with respect to FIGS. **2***a* and **2***b*. A user of the transmission and receiving system of the present invention preferably accesses transmission system **100** by calling a phone number or by typing commands into a computer. The user then chooses audio and/or video material from a list of available items which he or she wants to listen to and/or watch.

As shown in FIG. **1***a*, the transmission and receiving system may preferably comprise a peer to peer configuration where one transmission system **100** communicates with one reception system **200**. As shown in FIG. **1***b*, the transmission and receiving system of the present invention may alternatively comprise a plurality of reception systems **200**, **200'**, **200''**, and **200'''**, which are each associated with a single transmission system **100**.

FIG. **1***c* shows a high level block diagram of the transmission and receiving system of the present invention including remote order processing and item database **300**, described in more detail with respect to FIG. **3**. Remote order processing and item database **300** preferably enables users to access desired items by remote communication. The remote order processing and item database **300** may communicate with a plurality of transmission systems **100**, **100'**, **100''**, and **100'''**, each of which communicates with a respective set of reception systems **200**, **200'**, **200''**, and **200'''**. Each of the reception systems in sets **200**, **200'**, **200''**, and **200'''** may preferably communicate with a plurality of users.

FIG. **1***d* shows a high level block diagram of the transmission and receiving system of the present invention including a transmission system **100** distributing to a plurality of users via a reception system **200** configured as a cable television system.

FIG. **1***e* shows a high level block diagram of the transmission and receiving system of the present invention including a transmission system **100** distributing to a plurality reception systems **200** and **200'**. In the configuration shown in FIG. **1***e*, reception system **200** is a direct connection system wherein a user is directly connected to transmission system **100**. Reception system **200'** preferably includes a first cable television system **200***a* and a second cable television system **200***b*. Users of cable television systems **200***a* and **200***b* are indirectly connected to transmission system **100**.

FIG. **1***f* shows a high level block diagram of the transmission and receiving system of the present invention including transmission system **100** distributing via several channels to reception systems **200** and **200'**. Reception system **200** is preferably non-buffering. In such a system, users are directly connected to transmission system **100**, as in reception system **200** in FIG. **1***e*.

Reception system **200'** shown in FIG. **1***f*is a cable television system, as shown in reception systems **200'** of FIG. **1***e*. In FIG. **1***f*, the reception system **200'** is preferably buffering, which means that users may receive requested material at a delayed time. The material is buffered in intermediate storage device **200***c* in reception system **200'**.

In the configuration of FIG. **1***f*, decompression of the requested material may preferably occur at the head end of a cable television reception system **200'**. Thus, distribution may be provided to users via standard television encoding methods downstream of the head end of the cable distribution system. This method is preferred for users who only have cable television decoders and standard television receivers.

FIG. **1***g*shows a high level block diagram of the transmission and receiving system of the present invention including transmission system **100** distributing to a reception system **200**, which then preferably transmits requested material over airwave communication channels **200***d*, to a plurality of users. The transmission and receiving system shown in FIG. **1***g* may preferably transmit either compressed or uncompressed data, depending on the requirements and existing equipment of the user. The airwave transmission and receiving system shown in FIG. **1***g* may preferably employ either VHF, UHF or satellite broadcasting systems.

With respect to the transmission and receiving sytems set forth in FIGS. **1***a*–**1***g*, the requested material may be fully compressed and encoded, partly decompressed at some stage in transmission system **100**, or fully decompressed prior to transmission. The reception systems

200 may either buffer the requested material for later viewing, or decompress in real time the requested material as it is distributed by transmission system 100. Alternatively, the reception systems 200 of the present invention may perform a combination of buffering and non-buffering by buffering some of the requested material and decompressing the remainder of the requested material for immediate viewing as it is distributed by transmission system 100.

In direct connection configurations, such as reception systems 200 shown in FIGS. 1e and 1f, the user preferably selects the reception system 200 to which the requested material is sent, and optionally selects the time playback of the requested material as desired. Accordingly, the user may remotely access the transmission system 100 from a location differenct than the location of reception system 200 where the material will be sent and/or played back. Thus, for example, a user may preferably call transmission system 100 from work and have a movie sent to their house to be played back after dinner or at any later time of their choosing.

In non-direct connection reception systems such as shown in reception system 200' of FIG. 1f, intermediate storage device 200c may preferably include, for example, sixteen hours of random access internal audio and video storage. A reception system with such storage is capable of storing several requested items for future playback. The user could then view and/or record a copy of the decompressed requested material in real time, or compressed in non-real time, at a time of their choosing. Accordingly, the user would not have to make a trip to the store to purchase or rent the requested material.

In any of the transmission and receiving systems illustrated in FIGS. 1a-1g, the requested material may be copy protected. To achieve copy protection, the requested material, as an item, is encoded as copy protected during storage encoding in transmission system 100. The user may then play back the item only one time. The user may also optionally review select portions of the item prior to its automatic erasure from the memory of the reception system 200. In this way, requested material may be distributed to "view only" users and also to "view and copy" users who wish to retain copies of the distributed items.

Copy protected programs, when decompressed and played back, would have a copy protection technique applied to the analog and digital output signals. The analog video output is protected from copying through the use if irregular sync signals, which makes the signal viewable on a standard television but not recordable on a audio/video recorder. Digital output protection is effected through copy protect bit settings in the digital output signal, thus preventing a compatible digital recorder from recording the digital audio and/or video signal stream. A protected item will not be passed to the compressed data port of the digital recorder for off line storage.

FIGS. 2a and 2b illustrate detailed block diagrams of preferred implementations of the transmission system 100 of the present invention. Transmission system 100 may either be located in one facility or may be spread over a plurality of facilities. A preferred embodiment of transmission system 100 may preferably include only some of the elements shown in FIGS. 2a and 2b.

Transmission system 100 of a preferred embodiment of the present invention preferably includes source material library means for temporary storage of items prior to conversion and storage in a compressed data library means. The items of information may include analog and digital audio and video information as well as physical objects such as books and records which require conversion to a compatible media type before converting, compressing and storing their audio and video data in the compressed data library means.

As shown in FIG. 2a, the source material library means included in transmission system 100 preferably includes a source material library 111. The source material library 111 may include different types of materials including television programs, movies, audio recordings, still pictures, files, books, computer tapes, computer disks, documents of various sorts, musical instruments, and other physical objects. These materials are converted to or recorded on a media format compatible to the digital and analog inputs of the system prior to being compressed and stored in a compressed data library 118. The different media formats preferably include digital or analog audio and video tapes, laser disks, film images, optical disks, magnetic disks, computer tapes, disks and, cartridges.

The source material library 111, according to a preferred embodiment of the present invention, may preferably include a single source material library or a plurality of source material libraries. If there are a plurality of source material libraries, they may be geographically located close together or may be located far apart. The plurality of source material libraries may communicate using methods and channels similar to the methods and channel types which libraries may employ for communication with the receiving system 200 of the user, or the source material libraries may communicate via any available method.

Prior to being made accessible to a user of the transmission and receiving system of the present invention, the item must be stored in at least one compressed data library 118, and given a unique identification code by identification encoder 112. Storage encoding, performed by identification encoder 112, aside form giving the item a unique identification code, optionally involves logging details about the item, called program notes, and assigning the item a popularity code. Storage encoding may be performed just prior to conversion of the item for transmission to reception system 200, at any time after starting the conversion process, or after storing the item in the compressed data library 118.

In a preferred embodiment of the present invention, the method of encoding the information involves assigning a unique identification code and a file address to the item, assigning a popularity code, and inputting the program notes. This process is identical for any of the different media types stored in the source material library 111.

The transmission system 100 of the present invention also preferably includes conversion means 113 for placing the items from source material library 111 into a predetermined format as formatted data. In the preferred embodiment, after identification encoding is performed by identification encoder 112, the retrieved information is placed into a predetermined format as formatted data by the converter 113. The items stored in source material library 111 and encoded by identification encoder 112 may be in either analog or digital form. Converter 113 therefore includes analog input receiver 127 and digital input receiver 124. If items have only one format, only one type of input receiver 124 or 127 is necessary.

When the information from identification encoder **112** is digital, the digital signal is input to the digital input receiver **124** where it is converted to a proper voltage. A formatter **125** sets the correct bit rates and encodes into least significant bit (lsb) first pulse code modulated (pcm) data. Formatter **125** includes digital audio formatter **125***a* and digital video formatter **125***b*. The digital audio information is input into a digital audio formatter **125***a* and the digital video information, if any, is input into digital video formatter **125***b*. Formatter **125** outputs the data in a predetermined format.

When the retrieved information from identification encoder **112** is analog, the inforamtion is input to an analog-to-digital converter **123** to convert the analog data of the retrieved information into a series of digital data bytes. Converter **123** preferably forms the digital data bytes into the same format as the output of formatter **125**.

Converter preferably includes an analog audio converter **123***a* and an analog video converter **123***b*. The analog audio converter **123***a* preferably converts the retrieved audio signal into pcm data samples at a fixed sampling rate. The analog video converter **123***b* preferably converts the analog video information, retrieved from identification encoder **123**, into pcm data also at fixed sampling rates.

If the retrieved information being converted contains only audio information, then the audio signal is fed to the appropriate digital audio input or analog input. When the retrieved information contains both audio and video information, the audio and video signals are passed simultaneously to the audio and video converter inputs. Synchronization between the audio and video data can be maintained in this way.

If, for example, the retrieved information to be converted from the source material library **111** is a motion picture film, the picture frames in the film are passed through a digital telecine device to the digital input receiver **124**. Format conversion is then preferably performed by digital video formatter **125***b*. Accompanying audio information is passed through an optical or magnetic digital playback device. This device is connected to digital audio formatter **125***a*.

In some cases, such as in inter-library transfers, incoming materials may be in a previously compressed form so that there is no need to perform compression by precompression processor **115** and compressors **128** and **129**. In such a case, retrieved items are passed directly from identification encoder **112** to the compressed data formatter **117**. The item database records, such as the program notes which may also be input from another system, to the compressed data formatting section **117**, where this data, if necessary, is reformatted to make it compatible with the material stored in compressed data library **118**. Such material may be received in the form of digital tapes or via existing communication channels and may preferably input directly to a short term storage **117'** in the compressed data formatting section **117**.

The transmission system **100** of the present invention also preferably includes ordering means for placing the formatted information into a sequence of addressable data blocks. As shown in FIG. **2***a*, the ordering means in the preferred embodiment includes time encoder **114**. After the retrieved information is converted and formatted by the converter **113**, the information may be time encoded by the time encoder **114**. Time encoder **114** places the blocks of converted formatted information from converter **113** into a group of addressable blocks. The preferred addressing scheme employs time encoding. Time encoding allows realignment of the audio and video information in the compressed data formatting section **117** after separate audio and video compression processing by precompression processor **115** and compressor **116**.

The converted formatted information of the requested material is then preferably in the form of a series of digital data bytes which represent frames of video data and samples of the audio data. A preferred relationship of the audio and video bytes to each other is shown in FIG. **8**. Incoming signals are input and converted in sequence, starting with the first and ending with the last frame of the video data, and starting with the first and ending with the last sample of the audio data. Time encoding by time encoder **114** is achieved by assigning relative time markers to the audio and video data as it passes from the converter **113** through the time encoder **114** to the precompression processor **115**. Realignment of audio and video data, system addressing of particular data bytes, and user addressing of particular portions of items are all made possible through time encoding.

Through the use of the address of an item and its frame number it is possible to address any particular block of audio or video data desired. From here, further addressing down to the individual byte is possible. Frames and groups of frames may preferably be further broken down, as necessary to the individual bytes and bits, as required for certain processing within the system.

User and system addressing requirements dictate the level of granularity available to any particular section of the system. Users are able to move through data in various modes, thus moving through frame addresses at various rates. For example, a user may desire to listen to a particular song. They may preferably enter the song number either when requesting the item from the compressed data library **118** and only have that song sent to their receiving system **200** or they may preferably select that particular song from the items buffered in their receiving system **200**. Internal to the system, the song is associated with a starting frame number, which was indexed by the system operator via the storage encoding process. The system item database may contain information records for individual frames or groups of frames. These can represent still frames, chapters, songs, book pages, etc. The frames are a subset of, and are contained within, the items stored in the compressed data library **118**. Time encoding by time encoder **114** makes itmes and subsets of items retrieveable and addressable throughout the transmission system **100**. Time encoding enables subsequent compression of the information to be improved because data reduction prpcesses may be performed in the time dimension. This is described in greater detail below.

The transmission system **100** of the present invention also preferably includes data compression means for compressing the formatted and sequenced data. The sequence of addressable data blocks which was time encoded and output by time encoder **114** is preferably sent to precompression processor **115**. The data arriving from time encoder **114** may be at various frame rates and of various formats. Precompression processor **115** preferably includes audio precompressor **115***a* and video precompressor **115***b*.

Video precompression processor **115***b* buffers incoming video data and converts the aspect ratio and frame

rate of the data, as required by compression processor **116**. The frame buffer **131** of video precompression processor **115***b* holds all incoming data until the data is compressed by the data compressor **116**. The incoming video data is processed for sample rate optimization, aspect ratio fitting and buffered in buffer **130** for compression processing by the video precompression processor **115***b*.

Video precompression processor **115***b* processes the incoming video data so that if fits into the aspect ratio of the transmission and receiving system of the present invention. When incoming material with a different aspect ratio than the aspect ratio of the system is selected, a chosen background is preferably placed around the inactive region of the video information. In this way, no data is lost to differences in the aspect ratio between incoming material, and the converted and compressed data stored in transmission system **100**. Images resulting from a different aspect ratio may have an inactive region where background information is contained, or may be converted into a best fit arrangement. Output from the video precompression processor **115***b* is stored in the frame buffer **131**, which is dual ported and is directly addressable by video compressor **129**.

The incoming audio data is processed for sample rate and word length optimization and is then buffered in buffer **130** for compression processing by the audio precompression processor **115***a*Audio precompression processor **115***a* may preferably transcode incoming audio information, as required, to create the optimum sample rate and word lengths for compression processing. The output of the audio precompression processor **115***a* is a constant sample rate signal of a fixed word length which is buffered in frame buffer **130**. The frame buffer **130** is dual ported and is directly addressable by audio compressor **128**. Blocking the audio data into frames at audio precompression processor **115***a* makes it possible to work with the audio data as addressable packets of information.

Once precompression processing is finished, the frames are compressed by the data compressor **116**. Compressor **116** preferably comprises an audio data compressor **128** and a video data compressor **129**. The benefits of data compression performed by data compressor **116** are shortened transmission time, faster access time, greater storage capacity, and smaller storage space requirements. Compression processing performed by compessors **128** and **129** requires multiple samples of data to perform optimum compression. Audio and video informaion is preferably converted into blocks of data organized in groups for compression processing by audio compressor **128** and video compressor **129**, respectively. These blocks are organized as frames, and a number of frames are contained respectively in the buffers **130** and **131**. By analyzing a series of frames it is possible to optimize the compression process.

Audio data is preferably compressed by audio compressor **128** by application of an adaptive differential pulse code modulation (ADPCM) process to the audio data. This compression process, which may be implemented by the apt-x 100 digital audio compression system, is manufactured by Audio Processing Technology (APT). Audio compression ratios of 8X or greater are achieved with the APT system.

Compression by compressor **116** may be performed on a group of 24 video frames may preferably be passed in sequence to the frame buffer **130** of the video precompression processor **115***b* where they are analyzed by video compressor **129** which performs data reduction processing on the video data. Video compression is preferably performed by video compressor **129**. Video compression is achieved by the use of processors running algorithms designed to provide the greatest amount of data compression possible. Video data compression preferably involves applying two processes: a discrete cosine transform, and motion compensation. This process is described in "A Chip Set Core of Image Compression", by Artieri and Colavin. Multiple frames of video data may preferably be analyzed for patterns in the horizontal (H), vertical (V), diagonal (zigzag) and time (Z) axis. By finding repetition in the video data, redundancy may be removed and the video data may be compressed with a minimal loss of information.

In accordance with a preferred embodiment of the present invention, the transmission system **100** may further comprise compressed data storing means, coupled to the compression means, for storing as a file the compressed sequenced data with the unique identification code received from the data compression means. After compression processing by compressor **116**, the compressed audio and video data is preferably formatted and placed into a single file by the compressed data storage means **117**. The file may contain the compressed audio and/or video data, time markers, and the program notes. The file is addressable through the unique identification code assigned to the data by the identification encoder **112**.

Further, according to the present invention, the transmission system preferably includes compressed data library means for separately storing composite formatted data blocks for each of the files. The compressed data storage means preferably includes compressed data library **118**, as shown in FIG. **2***b*. After the data is processed into a file by the compressed data storage means **117**, it is preferably stored in a compressed data library **118**. In a preferred embodiment, compressed data library **118** is a network of mass storage devices connected together via a high speed network. Access to any of the files stored in compressed data library **118** is available from multiple reception systems **200** connected to the transmission and receiving system.

Stored items are preferably accessed in compressed data library **118** through a unique address code. The unique address code is a file address for uniquely identifying the compressed data items stored in the compressed data library section of a library system. This file address, combined with the frame number, and the library system address allow for complete addressability of all items stored in one or more compressed data libraries **118**. Compressed data library addresses along with receiving system addresses are used to form a completely unique address for distribution system control.

The unique address code is an address assigned to the item by the system operator during storage encoding, which is preferably done prior to long term storage in the compressed data library **118**. In a preferred embodiment, the unique address code is used for requesting and accessing information and items throughout the transmission and receiving system. The unique address code makes access to the requested data possible.

The storage encoding process performed by encoder **112** also allows entry of item notes and production credits. Production credits may include the title, names of

the creators of the item such as the producer, director, actors, etc. Other details regarding the item which may be of interest and which may make the items more accessible are kept in an item database.

Item addresses are mapped to item names by identification encoder **112** and may preferably be used as an alternative method of accessing items. The item names are easier to remember, thus making user access more intuitive by using item names. The storage encoding entry process performed in identification encoder **112** operates a program which updates a master item database containing facts regarding items in the compressed data library system. The storage encoding process may be run by the system operator whereby the system operator accesses the master item database to track and describe items stored in one or more compressed data libraries. The names and other facts in the item database may preferably be updated at any time via the storage encoding process. Changes made to the master item database may be periodically sent to the remote order processing and item database **300**.

As described in more detail later, a user may preferably access an item via its unique identification code, via its title, or the user may use other known facts for accessing an item. The user may access items in the compressed data library **118** directly using the unique address code or the user may obtain access via the remote order processing and item database **300**. Indirect access via the remote order processing and item database **300** is possible using, for example, a synthesized voice system, a query type of computer program interface, or customer assistance operators. In addition to providing interactive access to the remote order processing and item database **300**, a catalog listing some or all available titles may also preferably be published. With a published catalog, users may obtain the unique address code for an item very easily thereby allowing for retrieval from the compressed data library **118** without any help from an interactive system.

To achieve user access via an interactive system, facts about the items may be kept in files as a part of the items or the facts may be kept separately, for example, by systems which only to inform users of the available items and take orders. For example, in systems which have portions split in separate locations, the facts about the items may be separated from the items themselves and stored in separate files. A system of this type can distribute user orders to other portions of the transmission and receiving system for ultimate distribution to the requesting user. Further, to support a plurality of users, multiple versions of the item database may preferably reside either on multiple database servers, in catalogs, or on other computer systems.

The item database master may reside in the system control computer **1123** where may be is updated and kept current to the contents of the compressed data library **118**. The data stored in the item database master may be accessed by users via application programs, running on the system control computer **1123**, and on the reception system **200** of the user. Users may connect to the item database via any available telecommunication channels. Copies of the item database master may be updated and informed of new entries into compressed data library **118** at periodic intervals determined by the system manager.

Other copies of the item database master may also be made available to users from the remote order processing and item database **300** which batch processes and downloads user requests to the control computer **1123** of the compressed data library **118** via standard telecommunications or high speed communication channels. Moreover, multiple remote order processing and item database **300** sites make it possible for more locations to process orders than there are library facilities, and thus make order processing more efficient.

Preferably, access of a requested item via the remote order processing and item database **300** operates as follows. If the user does not know the title of the desired item, he or she may request the item by naming other unique facts related to the item. For example, a user would be able to access an item about Tibetan Medicine by asking for all items which include information about "Tibet" and include information about "Medicine." The remote order processing and item database **300** would then be searched for all records matching this request. If there is more than one item with a match, each of the names of the matching items are preferably indicated to the user. The user then selects the item or items that he or she desires. Upon selection and confirmation, by the user, a request for transmission of a particular item or items is sent to the distribution manager program of the system control computer **1123**. The request contains the address of the user, the address of the item, and optionally includes specific frame numbers, and a desired viewing time of the item.

The storage encoding process performed by identification encoder **112** also allows entry of a popularity code. The popularity code is preferably assigned on the basis of how often the corresponding item is expected to be requested from the compressed data library **118**. This popularity code can be used to determine the most appropriate form of media for storage of the compressed data in a mixed media system. Mixed media systems are preferably employed as more cost effective storage in very large compressed data libraries **118**. Once assigned, the popularity code may be dynamically updated, by factoring item usage against system usage. Thus, stored items are dynamically moved to the most appropriate media over their life in the compressed data library **118**. If a particular item stored in compressed data library **118** is retrieved frequently by users, storage in compressed data library **118** is preferably on higher speed, more reliable, and probably more expensive media. Such media includes Winchester and magneto-optical disks.

If an item stored in compressed data library **118** is retrieved less frequently, it may be stored in the compressed data library **118** on a digital cassette tape. Examples of such cassette tapes are a Honeywell RSS-600 (Honeywell Inc. Minneapolis, Minn.), Summus JukeBoxFilm and tape library (Summus Computer Systems, Houston, Tex. 800-255-9638), or equivalent cassette tapes. All items stored in the compressed data library **118** are on line and are connected to the high speed network. Thus, they may be readily accessed.

Instead of using a remote order processing and item database **300**, the compressed data library **118** may include the program notes which were input by the system operator. The program notes may preferably include the title of the item stored in the compressed data library **118**, chapter or song titles, running times, credits, the producer of the item, acting and production credits, etc. The program notes of an item stored in the compressed data library **118** may be thus contained within the compressed data file formed in the compressed data formatter **117**.

In some cases, where multiple compressed data libraries **118** are organized, the popularity code may dictate distribution of a particular item to multiple distribution systems. In such cases, a copy of the compressed data is sent to another library and the other library can then distribute the compressed data to users concurrently with the original compressed data library **118**.

The compressed data library **118** is composed of a network of storage devices connected through a High Performance Parallel Interface (HPPI) Super Controller (available from Maximum Strategy Inc., San Jose, Calif.). Therefore, multiple communication controllers may preferably access the large quantity of data stored in compressed data library **118** at very high speeds for transfer to a reception system **200** of a user upon request. For more details on this configuration see Ohrenstein, "Supercomputers Seek High Throughput and Expandable Storage", Computer Technology Review, pp. 33-39 April 1990.

The use of an HPPI controller allows file placement onto multiple mass storage devices of the compressed data library **118** with a minimum of overhead. Database management software controls the location and tracking of the compressed data library **118** which can be located across multiple clusters of file servers connected together by one or more high speed networks over multiple systems.

The transmission system **100** of the present invention may also preferably include library access/interface means for receiving transmission requests to transmit items and for retrieving formatted data blocks stored in the compressed data library **118** corresponding to the requests from users. The compressed audio and/or video data blocks, along with any of the information about the item stored in the compressed data library **118** may be accessed via library access interface **121**. The library access interface **121** receives transmission requests either directly from the users or indirectly by remote order processing and item database **300**. The transmission format means **119** receives the request and retrieves the composite formatted data block of the requested item stored in compressed data library **118** and converts the compressed formatted data block into a format suitable for transmission. The requested item is then sent to the user via the transmitter **122** or directly via interface **121**.

In a preferred embodiment of the present invention, customer access of an item stored in compressed data library **118** via the library access interface **121** may be performed in various ways. The methods of requesting a stored item are analogous to making an airline reservation or transferring funds between bank accounts. Just as there are different methods available for these processes it is desirable to have several ordering methods available to the users of the system of the present invention. For example, telephone tone decoders and voice response hardware may be employed. Additionally, operator assisted service or user terminal interfaces may be used.

Customer access via telephone tone decoders and voice response hardware is completely electronic and may preferably be performed between a system user and a computer order entry system. The user may obtain help in ordering an item from a computer synthesized voice. With such an access method, the user will normally be accessing a dynamic catalog to assist them. Confirmation of selections and pricing information may preferably be given to the user prior to completion of the transaction.

This process of access, performed by remote order processing and item database configuration **300**, shown in FIG. **1***c*, preferably includes the following steps, shown in flowchart **3000** of FIG. **3**. First, the user calls the system access number (step **3010**). Upon successfully dialing the system access number, the user receives instructions from the system (step **3020**). The instructions may preferably include steps the user must take in order to place an order. Preferably, the instructions may be bypassed by the experienced user who knows how to place an order.

The user then enters a customer ID code by which the system accesses the user's account, and indicates to the system that the user is a subscriber of the system (step **3030**). In response to the user entering his ID code in step **3030** the system confirms whether the user is in good standing (step **3040**). If the user is in good standing, the system queues the user to input his request (step **3050**).

The user request may preferably be made from a catalog sent to each of the subscribers of the system. The user will preferably identify his choice and enter the corresponding identification code of the item (step **3060**). The system then preferably confirms the selection that the user has made and informs the user of the price of the selection (step **3070**).

The user then indicates whether the confirmation performed in step **3070** is correct (step **3080**). If the confirmation performed in step **3070** is correct, the user so indicates and then inputs a desired delivery time and delivery location (step **3090**).

If the confirmation performed in step **3070** does not result in the selection desired by the user, the user reinputs the item identification code in step **3060** and the confirmation steps **3070** and **3080** are repeated. Therefore, proper selection of the selected item is insured. Once there is confirmation, the user enters the playback time and destination in step **3090**.

The user then preferably confirms that the order is correct (step **3100**). The confirmation performed in step **3100** includes confirmation of the entire transaction including the selected item, the selected time of playback, and the location of playback. The transaction is then completed and the request is placed on a transmission queue at the appropriate compressed data library **118** (step **3110**).

Access by the users via operator assisted service includes telephone operators who answer calls from the users. The operators can sign up new customers, take orders, and help with any billing problems. The operators will preferably have computer terminals which give them access to account information and available program information. Operators can also assist a user who does not know a title by looking up information stored in files which may contain the program notes, as described above. Once the chosen program is identified, the operator informs the user of the price. After the user confirms the order, the user indicates the desired delivery time and destination. The operator then enters the user request into the system. The request is placed in the transmission queue.

Access by a user terminal interface method provides the user with access from various terminals including personal computers, and specialized interfaces built into the reception system **200** for the user. Such access allows a user to do a search of available programs from a

computer screen. This process involves the steps **4000** shown in FIG. **4**.

FIG. **4** is a flowchart of a preferred method of user request via a user interface of the present invention. In the preferred method of FIG. **4**, the user first logs onto the user terminal interface (step **4010**). After the user logs on, the user may preferably select a desired item by searching the database of available titles in the library system control computer **1123** or any remote order processing and item database **300** (step **4020**). The search may preferably be performed using the database containing the program notes, described above with respect to FIGS. **2***a* and **2***b*. It is possible to process orders and operate a database of available titles at multiple locations remote of the source material library **111**. Users and order processing operators may preferably access such remote systems and may place transmission requests from these systems. Orders placed on these systems will be processed and distributed to the appropriate libraries. After the desired item is found, the user selects the item for transmission at a specific time and location (step **4030**).

To complete an order, the remote order processing and item database **300** preferably connects to the compressed data library **118** of choice via the library access interface **121** and communicates with the library system control computer **1123**. Preferably the user's account ID, identification of the item for transmission and the chosen destination for the item are communicated. Through employment of distributed order processing systems of this type many orders may be processed with minimal library overhead.

All transmission requests from the access methods are placed into a transmission queue managed by the library system control computer **1123**. This queue is managed by a program that controls the distribution of the requested items to the reception system **200** of the user. The queue manager program also operates in the system control computer and keeps track of the user ID, the chosen program and price, the user channel type, the number of requests for a given program, the latest delivery time, and the compressed data library media type (for example, high speed or low speed). From this information, the queue manager program makes best use of the available distribution channels and media for efficient transmission and storage of the requested items.

The queue manager program also manages the file transmission process for multiple requests for a single file, stored in the compressed data library **118**. During a given time period, the queue manager program will optimize access to the compressed data library **118**, wherever possible it will place the data on multiple outputs for simultaneous transmission to more than one requesting user.

The conversion performed by transmission data converter **119** encodes the data for the transmission channel. The transmission data converter transfers the desired segments of data from the compressed data library **118** onto the communication channel which is used to deliver the data to the reception system **200**.

The transmission system **100** of the present invention preferably further includes transmitter means **122**, coupled to the compressed data library **118**, for sending at least a portion of a specific file to at least one remote location. The transmission and receiving system of the present invention preferably operates with any available communication channels. Each channel type is accessed through the use of a communications adaptor board or processor connecting the data processed in the transmission format converter **119** to the transmission channel.

A preferred embodiment of the present invention also includes means by which to access users via common access lines. These may include standard telephone, ISDN or B-ISDN, microwave, DBS, cable television systems, MAN, high speed modems, or communication couplers. Metropolitan Area Networks (MANs) which are common carrier or private communication channels are designed to link sites in a region. MANs are described by Morreale and Campbell in "Metropolitan-area networks" (IEEE Spectrum, May 1990 pp. 40–42). The communication lines are used to transmit the compressed data at rates up to, typically, 10 Mb/sec.

In order to serve a multitude of channel types, a preferred embodiment of the present invention includes a multitude of output ports of each type connected to one or more computers on the transmission and receiving system. The management of transmission is then distributed. That is, the computer controlling the transmission queue tells the transmission encoding computer its task and then the task is executed by the transmission encoding computer, independent of the transmission queue computer. The transmission queue computer provides the data for transmission by the file server which also distributes to other transmitters located in the same or other transmission encoding computers.

FIG. **5** is a flowchart of a preferred method of implementing a queue manager program of the present invention. The queue manager program, in the distribution process, preferably confirms availability of an item from the compressed data library **118** and logically connects the item stored in compressed data library **118** to the communications controller, illustrated in FIG. **2***a* (step **5010**). After availability is confirmed in step **5010**, the data awaits transmission by the transmitter **122**.

After availability is confirmed in step **5010**, the communications controller preferably makes the physical connection to the reception system **200** of the user (step **5020**). This is normally done by dialing the receiving device of the user. The reception system **200** preferably answers the incoming call and confirms the connection (step **5030**).

Once connected to the reception system **200**, in steps **5020** and **5030**, the data stored in compressed data library **118** is preferably transferred in data blocks from the compressed data library **118** to the communications controller (step **5040**). The data blocks are buffered by the communications controller. The buffered data is sent down the communications channel to the reception system **200** by transmitter **122** (step **5050**).

The transmitter **122** places the formatted data onto the communications channel. This is an electrical conversion section and the output depends upon the chosen communication path. The signal is sent to the reception system **200** in either a two way or a one way communication process. In a standard telephone connection, the transmitter **122** is preferably a modem. When using an ISDN channel, the transmitter **122** is preferably a data coupler.

In a preferred embodiment of the present invention, many forms of communication channels may be employed. Distribution of information is by common carrier communication channels whenever possible. These channels include common telephone service, ISDN and Broadband ISDN, DBS, cable television systems, microwave, and MAN.

In order that reception is performed efficiently, the reception system **200** confirms reception of the initial data block before receiving the remaining data blocks whenever possible (step **5060**). After all data blocks have been received and reception is confirmed, the communications controller breaks the physical connection to the reception system **200** (step **5070**). Then, confirmation of the transmission is sent to the queue manager (step **5080**). Finally, the queue manager updates the list and sends the information to the billing program, which updates the account of the user (step **5090**).

When item distribution occurs through a broadcasting method such as a communications satellite, the process is one way, with ongoing reception not being confirmed by the reception system **200**. In these situations, some further redundancy is included by transmission formatter **122** with the data blocks for error correction processing to be performed in the reception system **200**. In such one way communication situations, the queue manager program running in library system control computer **1123** confirms reception, via telephone line connection for example, to the reception system **200** after distribution. This should occur prior to updating the user's account and the dispatch lists.

The real time output signals are output to a playback system such as an audio amplifier and/or television. This output may also be sent to an audio/video recorder for more permanent storage. Moreover, in the preferred embodiment only non-copy protected data can be recorded on an audio/video recorder. Any material which is copy protected will be scrambled at the video output in a way which makes it viewable on a standard audio/video receiver but does not allow for recording of the material.

The reception system **200** has playback controls similar to the controls available on a standard audio/video recorder. These include: play, fast forward, rewind, stop, pause, and play slow. Since items are preferably stored on random access media, the fast forward and rewinding functions are simulations of the actual events which occur on a standard audio/video recorder. Frames do not tear as on an audio/video recorder, but in fast play modes they go by very quickly.

The library access interface **121** in the reception system **200** preferably includes a title window where a list of available titles are alphabetically listed. This window has two modes: local listing of material contained within the library system control computer **1123**, and library listing for all available titles which may be received from the available, remotely accessible libraries. The titles listed in this window are sent from the database on the library system control computer **1123** or the remote order processing and item database **300**.

The system may also preferably include dispatching control software which receives input from the remote order processing and item database **300** and sends distribution requests to the distribution systems. In instances where not all items are contained in each of the compressed data libraries **118**, the dispatching software will keep a list of the available titles in a particular compressed data library **118**. The dispatch software may also preferably coordinate network traffic, source material library **111** utilization, source material library **111** contents, and connection costs. By proper factoring of these variables, efficient use of the available distribution channels may be achieved.

FIG. **6** illustrates a block diagram of a preferred implementation of the reception system **200** according to the present invention. The reception system **200** is responsive to user requests for information stored in source material library **111**. The reception system **200** includes transceiver **201** which receives the audio and/or video information transmitted by transmitter **122** of the transmission system **100**. The transceiver **201** automatically receives the information from the transmitter **122** as compressed formatted data blocks.

The transceiver **201** is preferably connected to receiver format converter **202**. The receiver format converter **202** converts the compressed formatted data blocks into a format suitable for playback by the user in real time.

In the reception system **200** of the present invention, the user may want to play back the requested item from the source material library **111** at a time later than when initially requested. If that is the case, the compressed formatted data blocks from receiver format converter **202** are stored in storage **203**. Storage **203** allows for temporary storage of the requested item until playback is requested.

When playback is requested, the compressed formatted data blocks are sent ot data formatter **204**. Data formatter **204** processes the compressed formatted data blocks and distinguishes audio information from video information.

The separated audio and video information are respectively decompressed by audio decompressor **209** and video decompressor **208**. The decompressed video data is then sent simultaneously to converter **206** including digital video output converter **211** and analog video output converter **213**. The decompressed audio data is sent simultaneously to digital audio output converter **212** and analog audio output converter **214**. The outputs from converters **211–214** are produced in real time.

The real time output signals are output to a playback system such as a TV or audio amplifier. They may also be sent to an audio/video recorder of the user. By using the reception system **200** of the present invention, the user may utilize the stop, pause, and multiple viewing functions of the receiving device. Moreover, in a preferred embodiment of the present invention, the output format converters may be connected to a recorder which enables the user to record the requested item for future multiple playbacks.

FIG. **7** is a flow chart **400** of a preferred method of distribution of the present invention. The distribution method is preferably responsive to requests identifying information to be sent from the transmission system **100** to remote locations. Method **400** assumes that the items have already been stored in compressed data library **118**.

As illustrated in FIG. **7**, the first step of the distribution method **400** involves retrieving the information for selected items in the source material library **111**, upon a request by a user of the distribution system (step **412**). This is analogous to taking books off of a shelf at the local public library after the person has decided that he or she would like to read them.

After the information for the selected items is retrieved in step **412**, the distribution method **400** of the present invention further comprises the step of processing the information for efficient transfer (step **413**). The processing performed in step **413** preferably includes assigning a unique identification code to the retrieved information performed by identification encoder **112** shown and described with respect to FIG. **2***a* (step **413***a*). The processing also preferably includes placing

the retrieved information into a predetermined format as formatted data by converter **113** (step **413***b*), and placing the formatted data into a sequence of addressable data blocks by ordering means **114** (step **413***c*).

Processing step **413** also includes compressing the formatted and sequenced data performed by data compressor **116** (step **413***d*), and storing as a file the compressed sequenced data received from the data compression means with the unique identification assigned by the identification encoding means (step **413***e*).

After the information is processed for efficient transfer, in substeps **413***a–e* of step **413**, the distribution method **400** of the present invention preferably includes the step of storing the processed information is stored in a compressed data library (step **414**). Preferably, the compressed data library is analogous to compressed data library **118**, described with respect to FIG. **2***a*.

After the information is stored in a compressed data library **118**, the transmission and receiving system preferably waits to receive a transmission request (step **415**). Upon receiving a transmission request, from transmission system **100**, the compressed formatted data is preferably converted for output to a reception system **200**, selected by the user. The information is preferably transmitted over an existing communication channel to a reception system **200**, and is received by that system (step **417**). When the information is received in step **417**, it is preferably formatted for the particular type of reception system **200** to which the information is sent.

The received information is preferably buffered (step **418**) by a storage means analogous to element **203** shown in FIG. **3**. The information is preferably buffered so that it may be stored by the user for possible future viewings. The requested information is then payed back to the reception system **200** of the user at the time requested by the user (step **419**).

FIGS. **8***a–***8***e* are block diagrams of preferred implementations of data structures and data blocking for items in the audio and video distribution system. FIG. **8***a* shows the block structure of video data where a video frame **812** is composed of a plurality of video samples **811**, and a second of video **813** is composed of a plurality of video frames **812**.

FIG. **8***b* shows the block structure of audio data where an audio data frame **822** is composed of a plurality of audio sample **821**, and a second of audio **823** is composed of a plurality of audio data frames **822**. FIG. **8***c* shows the block structure of a data frame **832** composed of a plurality of data bytes **831**. The combination of the audio frames **812**, video frames **822**, and data frames **832** comprise the elements of a single item. FIG. **8***d* shows a block representation of for three illustrative items which may be stored in the source material library **111**. Each of items 1–3 contains its own arrangement of video frames **812**, audio frames **822**, and data frames **832**.

FIG. **8***e* shows methods of distribution to reception systems **200** with both mutiplexed and non-multiplexed signal paths, both addressed and non-addressed blocks of items. A block of an item may be an entire item or, alternatively, may be only a portion of an item, as selected by a user. Further, the blocks may be composed of either compressed, partially compressed, or fully decompressed data, as required by the configuration of the reception system **200**.

As shown in FIG. **8***e*, the same block, for example, block **1**, may be simultaneously transmitted over different distribution channels. The blocks when transmitted over one of the distribution channels may have receiver addresses appended to the blocks or the reception system **200** may have been preconfigured to receive the blocks comprising data frames for particular items from the active distribution channel.

Other embodiments of the invention will be apparent to those skilled in the art from consideration of the specification and practice of the invention disclosed herein. It is intended that the specification and examples be considered as exemplary only, with the true scope and spirit of the invention being indicated by the following claims.

What is claimed is:

1. A transmission system for providing information to be transmitted to remote locations, the transmission system comprising:

library means for storing items containing information; identification encoding means for retrieving the information in the items from the library means and for assigning a unique identification code to the retrieved information;

conversion means, coupled to the identification encoding means, for placing the retrieved information into a predetermined format as formatted data;

ordering means, coupled to the conversion means, for placing the formatted data into a sequence of addressable data blocks;

compression means, coupled to the ordering means, for compressing the formatted and sequenced data blocks;

compressed data storing means, coupled to the data compression means, for storing as files the compressed, sequenced data blocks received from the data compression means with the unique identification code assigned by the identification encoding means; and

transmitter means, coupled to the compressed data storing means, for sending at least a portion of one of the files to one of the remote locations.

2. A transmission system as recited in claim **1**, wherein the transmitter means includes:

transmission format means for placing the compressed, sequenced data blocks onto a communication path.

3. A transmission system as recited in claim **1**, wherein the information in the items includes analog signals, and wherein the conversion means further comprises:

converting means, coupled to the identification encoding means, for A/D converting the analog signals of the information into a series of digital bytes; and

formatting means, coupled to the converting means, for converting the series of digital data bytes into formatted data with a predetermined format.

4. A transmission system as recited in claim **1**, wherein the information in the items includes digital signals, and wherein the conversion means further comprises:

digital input receiver means, coupled to the identification encoding means, for converting the digital signals of the information into predetermined voltage levels; and

formatting means, coupled to the digital input receiver means, for converting the predetermined voltage levels into formatted data witha predetermined format.

5. A transmission system as recited in claim 3, wherein the information in the items includes digital signals, and wherein the conversion means further comprises:

digital input receiver means, coupled to the identification encoding means, for converting the digital signals of the information into predetermined voltage levels; and

voltage levels adjusting means, coupled to the digital input receiver means, for converting the predetermined voltage levels into formatted data with the predetermined format.

6. A transmission system as recited in claim 2, wherein the compressed data storing means further comprises:

compressed data library means for separately storing a plurality of files, each including at least one compressed, sequenced data block.

7. A transmission system as recited in claim 6, further comprising:

system control interface means, coupled to the transmission format means, for generating a listing of available items; and p1 library access interface means, coupled to the transmission format means, for receiving transmission requests to transmit items, and for retrieving formatted data blocks stored in the compressed data library means corresponding to the requests from subscribers.

8. A transmission system as recited in claim 1, further comprising:

precompression data processing means, coupled to the ordering means, for storing the formatted data blocks.

9. A transmission system as recited in claim 1, wherein the information in the items includes analog audio information, and wherein the conversion means further comprises:

audio converting means, coupled to the identification encoding means, for converting the analog audio signals into streams of digital audio data.

10. A transmission system as recited in one of claims 1 or 9, wherein the information in the items includes analog video information, and wherein the conversion means further comprises:

video converting means, coupled to the identification encoding means, for converting the analog video signals into streams of digital video data.

11. A transmission system as recited in one of claims 1 or 9, wherein the information in the items includes partially encoded information, and wherein the conversion means further comprises:

digital input means, coupled to the identification encoding means, for receiving partial encoded information in the items.

12. A transmission system as recited in claim 1, wherein the data compression means comprises:

means for performing a multi-channel analysis of the formatted data for inclusion in a predetermined algorithm; and

compression processors for running the predetermined algorithm and for compressing the formatted data.

13. A transmission system as recited in claim 1, wherein the compression means comprises:

means for identifying patterns in the formatted data for inclusion in a predetermined algorithm; and

compression processors for running the predetermined algorithm and for compressing the formatted data.

14. A transmission system as recited in claim 12, wherein the multi-dimensional analysis means includes means for performing the multi-dimensional analysis in the horizontal dimension.

15. A transmission system as recited in claim 12, wherein the multi-dimensional analysis means includes means for performing the multi-dimensional analysis in the vertical dimension.

16. A transmission system as recited in claim 12, wherein the multi-dimensional analysis means includes means for performing the multi-dimensional analysis in the time dimension.

17. A transmission system as recited in claim 12, wherein the multi-dimensional analysis means includes means for performing the multi-dimensional analysis in the zig-zag dimension.

18. A transmission system as recited in claim 1, wherein the information in the items includes digital signals, and wherein the conversion means further comprises formatting means for converting the digital signals of the information into formatted data with a predetermined format.

19. A distribution method responsive to requests from a user identifying items in a transmission system containing information to be sent from the transmission system to receiving systems at remote locations, the method comprising the steps of:

storing, in the transmission system, information from items in a compressed data form, the information including an identification code and being placed into ordered data blocks;

sending a request, by the user to the transmission system, for at least a part of the stored information to be transmitted to the one of the receiving systems at one of the remote location selected by the user;

sending at least a portion of the stored information from the transmission system to the receiving system at the selected remote location;

receiving the sent information by the receiving system at the selected remote location;

storing a complete copy of the received information in the receiving system at the selected remote location; and

playing back the stored copy of the information using the receiving system at the selected remote location at a time requested by the user.

20. The distribution method as recited in claim 19, wherein the information in the items includes analog and digital signals, and wherein the step of storing the information comprises the steps, performed by the transmission system, of:

converting the analog signals of the information to digital components;

formatting the digital signals of the information;

ordering the converted analog signals and the formatted digital signals into a sequence of addressable data blocks and;

compressing the ordered information.

21. The method of claim 19 wherein the step of storing the items includes the substep of

storing the items in a plurality of compressed audio and video libraries in the transmission system.

22. The method of claim 19 further comprising the steps, performed by the transmission system, of:

storing a list of items available to the user from at least one compressed data library; and

providing the user with the list so that the user may remotely select a particular item for transmission.

23. The distribution method as recited in claim **19**, wherein the step of storing includes the step of storing the received information at the head end of a cable television reception system.

24. The distribution method as recited in claim **19**, wherein the step of storing includes the step of storing the received information in an intermediate storage device.

25. A receiving system responsive to a user input identifying a choice of an item stored in a source material library at a transmission system to be played back to a user at a location remote from the source material library, the item containing information to be sent from the transmission system to the receiving system, the receiving system comprising:

requesting means for transmitting to the source material library in the transmission system the identity of the item;

transceiver means, coupled to the requesting means, for receiving the item from the transmission system as at least one compressed, formatted data block;

receiver format conversion means, coupled to the transceiver means, for converting the at least one compressed, formatted data block into a format suitable for storage processing, and for playback at the receiver system;

storage means, coupled to the receiver format conversion means, for storing a complete copy of the formatted data;

decompressing means, coupled to the storage means, for decompressing the copy of the formatted data; and

output data conversion means, coupled to the decompressing means, for playing back the decompressed copy of the data at a time specified by the user.

26. A receiving system as recited in claim **25**, further comprising:

user interface means for translating the input into a request for sending the requested information from the transmitter to the receiving system.

27. A receiving system as recited in claim **25**, wherein the output data conversion means includes recording means which controls the playback of the copy.

28. A receiving system as recited in claim **25**, wherein the storage means stores the formatted information until playback is requested by an operator.

29. A receiving system as recited in claim **25**, wherein the formatted data includes video information, and wherein the decompressing means further comprises:

video signal decompressing means for decompressing the video information contained in the formatted data.

30. A receiving system as recited in claim **29**, wherein the output data conversion means further comprises:

digital video output means, connected to the video signal decompressing means, for outputting a digital video signal; and

analog video output means, connected to the video signal decompressing means, for outputting an analog video signal.

31. A receiving system as recited in claim **30**, wherein the video output means further comprises:

copy protection means for preventing copying by the user of protected information.

32. A receiving system as recited in claim **25**, wherein the formatted data includes audio information, and wherein the decompressing means further comprises:

audio signal decompressing means for decompressing the audio information contained in the formatted data.

33. A receiving system as recited in claim **32**, wherein the output data conversion means further comprises:

digital audio output means, connected to the audio signal decompressing means, for outputting a digital audio signal; and

analog audio output means, connected to the audio signal decompressing means, for outputting an analog audio signal.

34. A receiving system as recited in claim **25**, wherein the formatted data includes audio and video information, and wherein the decompressing means further comprises:

video signal decompressing means for decompressing the video information contained in the formatted data; and

audio signal decompressing means for decompressing the audio information contained in the formatted data.

35. A receiving system as recited in claim **25**, wherein the transceiver means receives the information via any one of telephone, ISDN, broadband ISDN, satellite, common carrier, computer channels, cable television systems, MAN, and microwave.

36. A receiving system as recited in claim **25**, wherein the source material library is a compressed data library.

37. A receiving system as recited in claim **29**, wherein the output data conversion means further comprises digital video output means, connected to the video signal decompressing means, for outputting a digital video signal.

38. A receiving system as recited in claim **29**, wherein the output data conversion means further comprises analog video output means, connected to the video signal decompressing means, for outputting an analog video signal.

39. A receiving system as recited in claim **32**, wherein the output data conversion means further comprises digital audio output means, connected to the audio signal decompressing means, for outputting a digital audio signal.

40. A receiving system as recited in claim **32**, wherein the output data conversion means further comprises analog audio output means, connected to the audio signal decompressing means, for outputting an analog audio signal.

41. A method of transmitting information to remote locations, the transmission method comprising the steps, performed by a transmission system, of:

storing items having information in a source material library;

retrieving the information in the items from the source material library;

assigning a unique identification code to the retrieved information;

placing the retrieved information into a predetermined format as formatted data;

placing the formatted data into a sequence of addressable data blocks;

compressing the formatted and sequenced data blocks;

storing, as a file, the compressed, formatted, and sequenced data blocks with the assigned unique identification code; and

sending at least a portion of the file to one of the remote locations.

42. A transmission method as recited in claim 41, wherein the step of placing further includes the steps of:

A/D converting analog signals of the retrieved information into a series of digital data bytes; and

converting the series of digital data bytes into formatted data with a predetermined format.

43. A transmission method as recited in claim 41, wherein the step of placing further includes the steps of:

converting digital signals of the retrieved information into predetermined voltage levels; and

converting the predetermined voltage levels into formatted data with a predetermined format.

44. A transmission method as recited in claim 41, wherein the step of placing further includes the step of converting digital signals of the retrieved information into formatted data with a predetermined format.

45. A transmission method as recited in claim 41, wherein the storing step further comprises the step of:

separately storing a plurality of files, each including compressed, sequenced data blocks.

46. A transmission method as recited in claim 45, further comprising the steps, performed by the transmission system, of:

generating a listing of available items;

receiving transmission requests to transmit available items; and

retrieving stored formatted data blocks corresponding to requests from users.

47. A distribution system including a transmission system and a plurality of receiving systems at remote locations, the transmission system being responsive to requests identifying items containing information to be sent from the transmission system to the receiving systems at the remote locations, the distribution system comprising:

storage means in the transmission system for storing information from the items in a compressed data form, in which the information includes an identification code and is placed into ordered data blocks;

requesting means in the transmission system, coupled to the storage means, for receiving requests from a user for at least a part of the stored information to be transmitted to the receiving system at one of the remote locations selected by the user;

transmission means in the transmission system, coupled to the requesting means, for sending at least a portion of the stored information to the receiving system at the selected remote location;

receiving means in the receiving system for receiving the transmitted information;

memory means in the receiving system, coupled to the receiving means, for storing a complete copy the received information; and

playback means in the receiving system, coupled to the memory means, for playing back the stored copy of the received information at a time requested by the user.

48. A distribution system as recited in claim 47, wherein the information in the items includes analog and digital signals, and wherein the storage means further comprises:

conversion means, for converting the analog signals of the information to digital components;

formatting means, coupled to the conversion means, for formatting the digital signals of the information;

ordering means, coupled to the formatting means, for ordering the converted analog signals and the formatted digital signals into a sequence of addressable data blocks and;

compression means, coupled to the ordering means, for compressing the ordered information.

49. A distribution system as recited in claim 47, wherein the memory means includes means for receiving information at the head end of a cable television reception system.

50. A distribution system as recited in claim 49, wherein the head end of the cable television reception system includes means for decompressing the received signals and distributing the decompressed received signals.

51. A distribution system as recited in claim 49, wherein the head end of the cable television reception system includes means for distributing compressed signals.

52. A distribution system as recited in claim 49, wherein the head end of the cable television reception system includes means for decompressing the received signals and for distributing the decompressed received signals and compressed received signals.

53. A distribution system as recited in claim 47, wherein the memory means is an intermediate storage device.

54. A method of receiving information at a receiving system from a transmission system which information is responsive to an input from a user, the input identifying a choice of an item stored in a source material library to be played back to the user at a receiving system at a location remote from the source material library, the item containing information to be sent from the transmission system to the receiving system, the receiving method comprising the steps of:

transmitting the identity of an item from the user to the source material library at the transmission system;

receiving at the receiving system the item from the transmission system as at least one compressed formatted data block;

converting, at the receiving system, the at least one compressed formatted data into a format suitable for storage processing and for playback in real time;

storing the converted information at the receiving system;

decompressing the stored information at the receiving system; and

playing back, at the receiving system, the decompressed information at a time specified by the user.

55. A receiving method, as recited in claim 54, wherein the decompressing step further includes the step of decompressing video information contained in the stored information.

56. A receiving method as recited in claim 54, wherein the decompressing step further includes the step of decompressing audio information contained in the stored information.

57. A receiving method as recited in claim 54, wherein the decompressing step further includes the steps of:

decompressing video information contained in the stored information; and

decompressing audio information contained in the stored information.

58. a receiving method as recited in claim 54, wherein the step of transmitting further includes the step of transmitting to a compressed data library the identity of an item.

* * * * *

UNITED STATES PATENT AND TRADEMARK OFFICE

CERTIFICATE OF CORRECTION

PATENT NO. : 5,132,992
DATED : July 21, 1992
INVENTOR(S) : Paul Yurt et al.

It is certified that error appears in the above-identified patent and that said Letters Patent is hereby corrected as shown below:

Column 23,
Line 42, after "the" insert -- user --;

Column 25,
Line 56, after "copy" insert -- of --.

Signed and Sealed this

Nineteenth Day of October, 2004

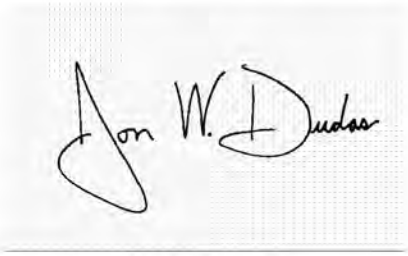

JON W. DUDAS
Director of the United States Patent and Trademark Office

UNITED STATES PATENT AND TRADEMARK OFFICE

CERTIFICATE OF CORRECTION

PATENT NO. : 5,132,992
DATED : July 21, 1992
INVENTOR(S) : Paul Yurt et al.

It is certified that error appears in the above-identified patent and that said Letters Patent is hereby corrected as shown below:

Column 20,
Line 67, "witha" should be -- with a --;

Column 21,
Line 23, delete "p1";
Line 58, "multi-channel" should be -- multi-dimensional --;

Column 26,
Line 64, "a" should be -- A --.

Signed and Sealed this

Eleventh Day of January, 2005

JON W. DUDAS
Director of the United States Patent and Trademark Office