US007195985B2

(12) **United States Patent**
Murthy et al.

(10) **Patent No.: US 7,195,985 B2**
(45) **Date of Patent: Mar. 27, 2007**

(54) **CMOS TRANSISTOR JUNCTION REGIONS FORMED BY A CVD ETCHING AND DEPOSITION SEQUENCE**

(75) Inventors: **Anand Murthy**, Portland, OR (US); **Glenn A. Glass**, Beaverton, OR (US); **Andrew N. Westmeyer**, Beaverton, OR (US); **Michael L. Hattendorf**, Beaverton, OR (US); **Jeffrey R. Wank**, Tigard, OR (US)

(73) Assignee: **Intel Corporation**, Santa Clara, CA (US)

(*) Notice: Subject to any disclaimer, the term of this patent is extended or adjusted under 35 U.S.C. 154(b) by 180 days.

(21) Appl. No.: **11/029,740**

(22) Filed: **Jan. 4, 2005**

(65) **Prior Publication Data**

US 2006/0148151 A1 Jul. 6, 2006

(51) **Int. Cl.**
H01L 21/331 (2006.01)

(52) **U.S. Cl.** **438/341**; 438/357; 438/413

(58) **Field of Classification Search** 438/341, 438/357

See application file for complete search history.

(56) **References Cited**

U.S. PATENT DOCUMENTS

6,137,149 A 10/2000 Kodama et al.
6,323,525 B1 11/2001 Noguchi et al.
6,342,421 B1 1/2002 Mitani et al.
6,774,000 B2 * 8/2004 Natzle et al. 438/300
2002/0048911 A1 * 4/2002 Nuttall et al. 438/488
2004/0248368 A1 12/2004 Natzle et al.
2004/0262683 A1 12/2004 Bohr et al.

FOREIGN PATENT DOCUMENTS

JP 07022338 1/1995
WO WO 00/30169 5/2000

OTHER PUBLICATIONS

Ueno, T. et al., "Dramatically enhanced performance of recessed SiGe source-drain pmos by in-situ etch and regrowth technique (InSERT)", VLSI Technology 2005, Digest of Technical Papers, 2005 Symposium on Kyoto, Japan, Jun. 14-16, 2005.

(Continued)

Primary Examiner—Dung A. Le
(74) *Attorney, Agent, or Firm*—Blakely, Sokoloff, Taylor & Zafman LLP

(57) **ABSTRACT**

This invention adds to the art of replacement source-drain cMOS transistors. Processes may involve etching a recess in the substrate material using one equipment set, then performing deposition in another. Disclosed is a method to perform the etch and subsequent deposition in the same reactor without atmospheric exposure. In-situ etching of the source-drain recess for replacement source-drain applications provides several advantages over state of the art ex-situ etching. Transistor drive current is improved by: (1) Eliminating contamination of the silicon-epilayer interface when the as-etched surface is exposed to atmosphere and (2) Precise control over the shape of the etch recess. Deposition may be done by a variety of techniques including selective and non-selective methods. In the case of blanket deposition, a measure to avoid amorphous deposition in performance critical regions is also presented.

14 Claims, 13 Drawing Sheets

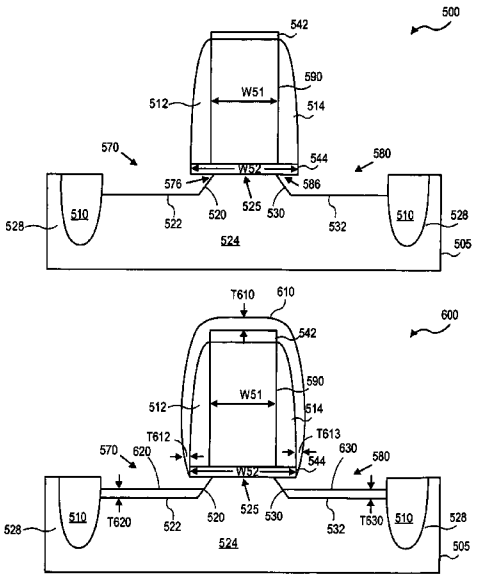

TSMC 1011

OTHER PUBLICATIONS

Loo, R. et al., "A new technique to fabricate ultra-shallow-junctions, combining in situ vapour HCI etching and in situ doped epitaxial SiGe re-growth", Applied Surface Science, vol. 224., No. 1-4, Mar. 15, 2004, pp. 63-67.

Kah Wee Ang et al., "Enhanced performance in 50nm N-MOSFETS with silicon-carbon source/drain regions", IEEE International Electron Devices Meeting, 2004. IEDM Technical Digest, San Francisco, CA, Dec. 13-15, 2004, pp. 1069-1071.

Zhikuan Zhang et al., "Self-aligned recessed source/drain ultra-thin body SOI MOSFET technology", Proceeding of the 34th European Solid-State Device Research Conference, 2004. ESSDERC 2004, Leuven, Belgium, Sep. 21-23, 2004, pp. 301-304.

* cited by examiner

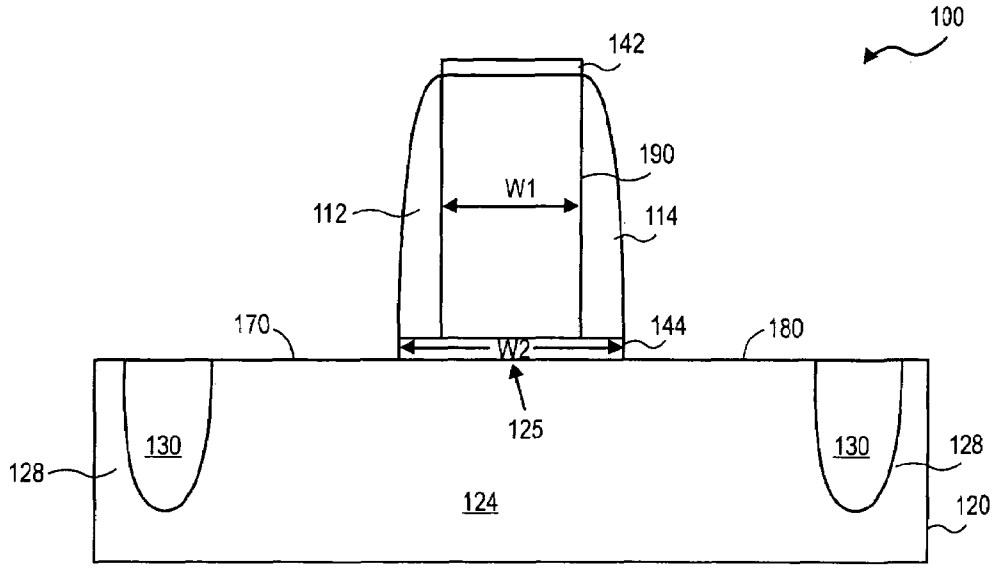

FIG. 1

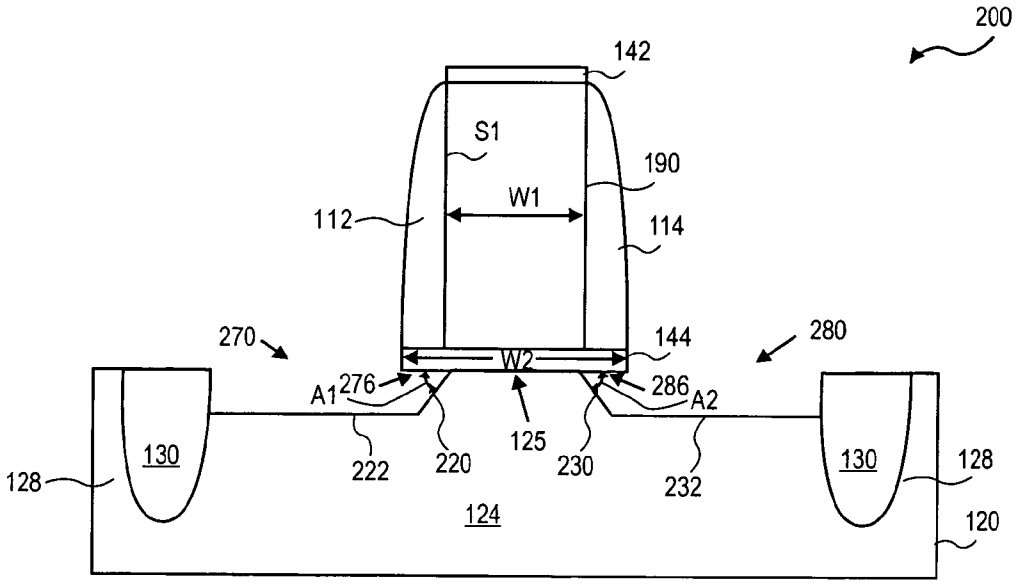
200
142
S1
190
W1
112
114
270
144
280
W2
A1
276
286
A2
125
222
220
230
232
130
130
128
128
124
120

FIG. 2

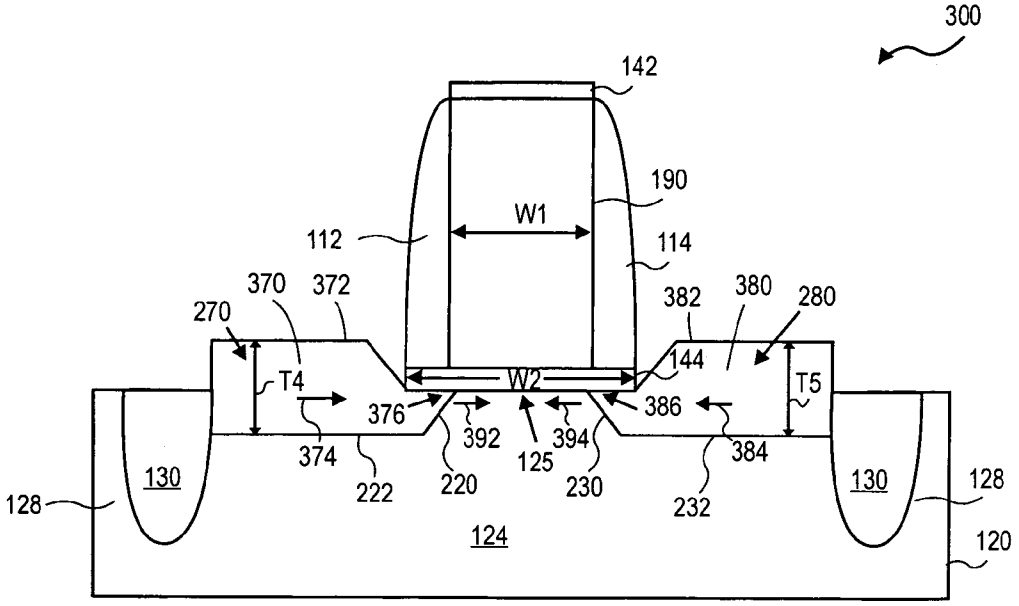
300
142
190
W1
112
114
370
372
382
380
280
270
144
T4
W2
T5
376
386
392
394
374
125
384
222
220
230
232
130
130
128
128
124
120

FIG. 3A

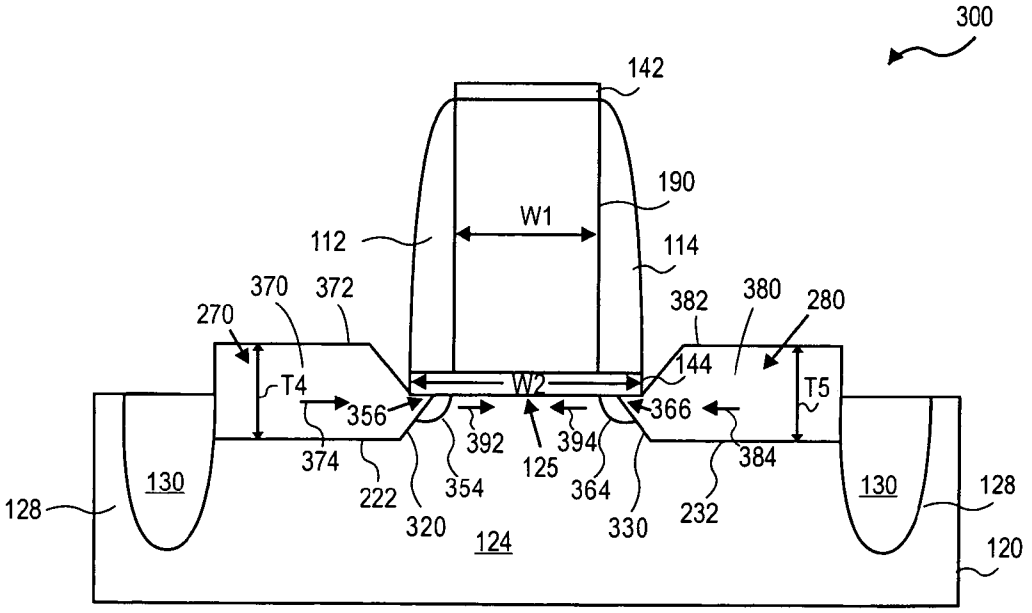
300
142
190
W1
112
114
370
372
382
380
280
270
T4
W2
144
T5
356
366
374
392
394
384
125
222
354
364
232
128
130
130
128
320
330
124
120

FIG. 3B

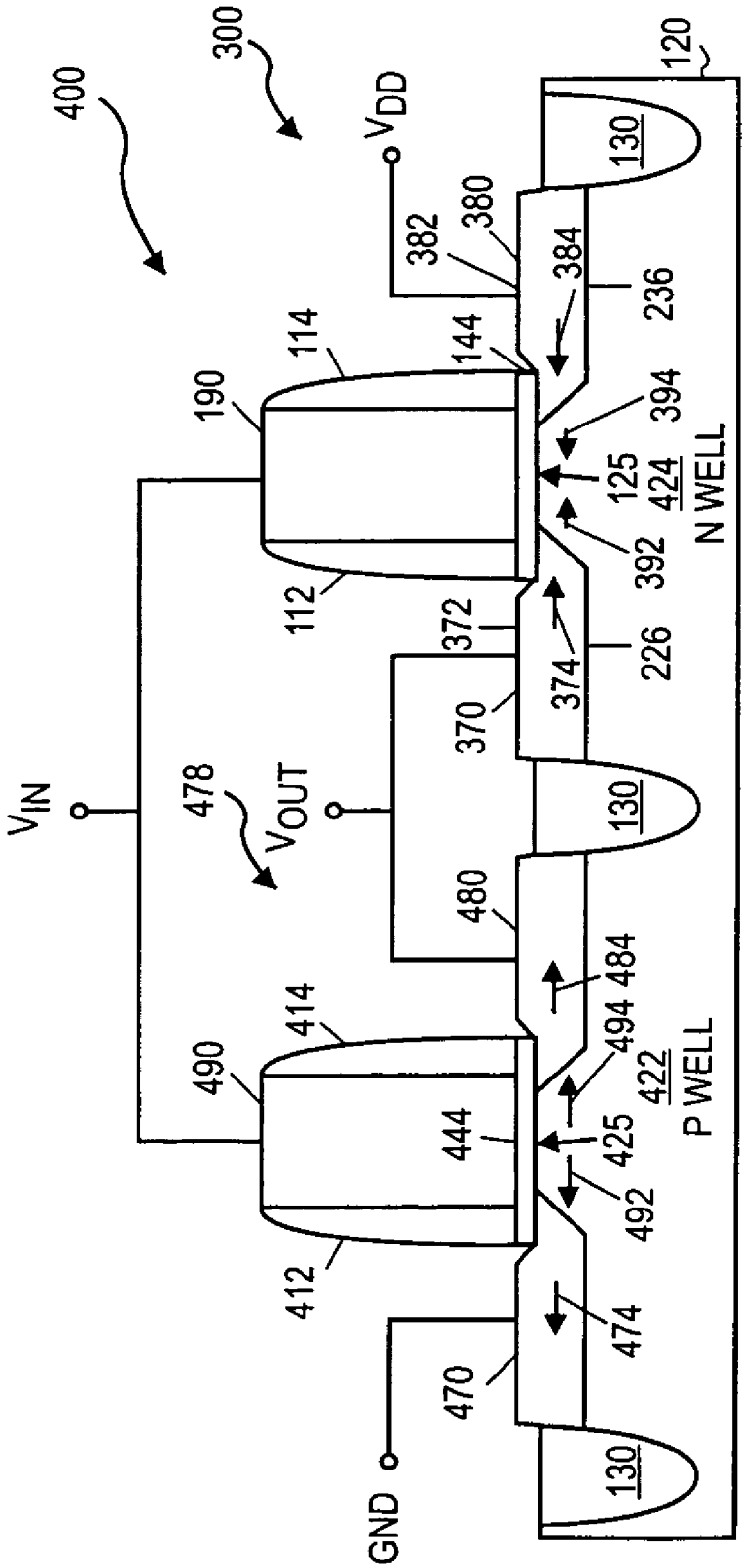
400
300
V_{DD}
120
130
382
380
384
236
114
144
190
394
125
424
N WELL
392
112
372
374
226
370
V_{IN}
478
V_{OUT}
130
480
484
414
494
490
422
P WELL
444
425
492
412
474
470
GND
130

FIG. 4

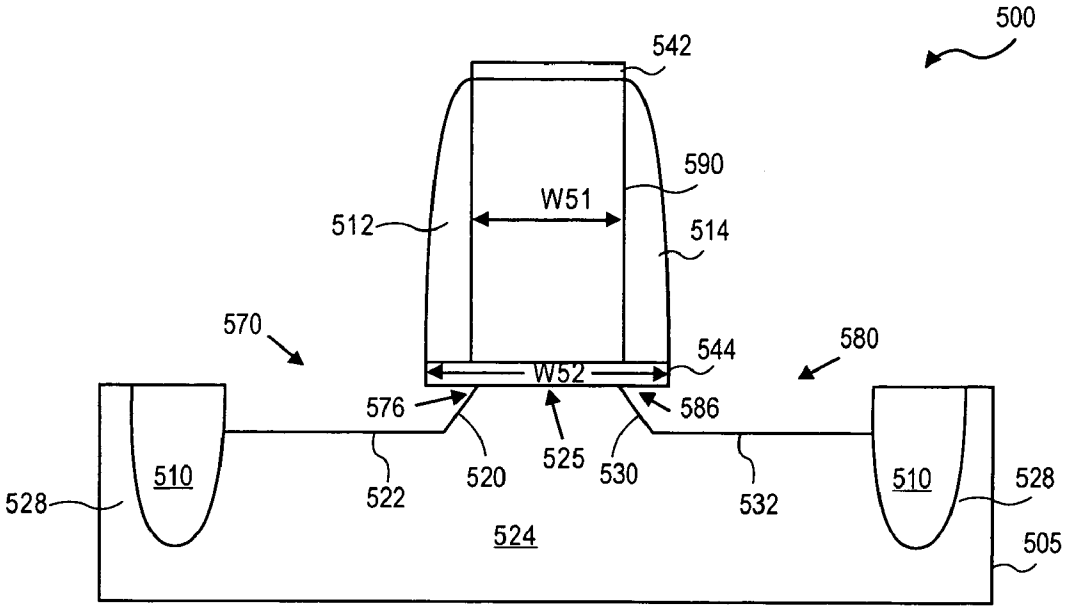
500
542
590
W51
512
514
570
580
544
W52
576
586
525
520
530
522
532
510
510
528
528
524
505

FIG. 5

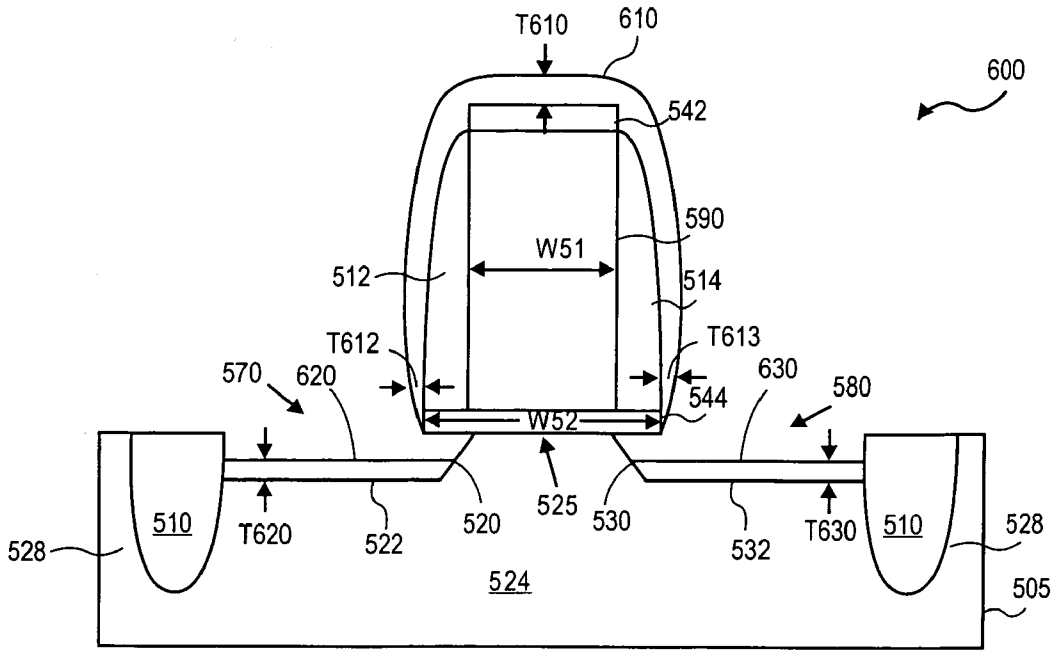
T610
610
600
542
590
W51
512
514
T612
T613
570
620
630
580
544
W52
525
510
T620
522
520
530
532
T630
510
528
528
524
505

FIG. 6

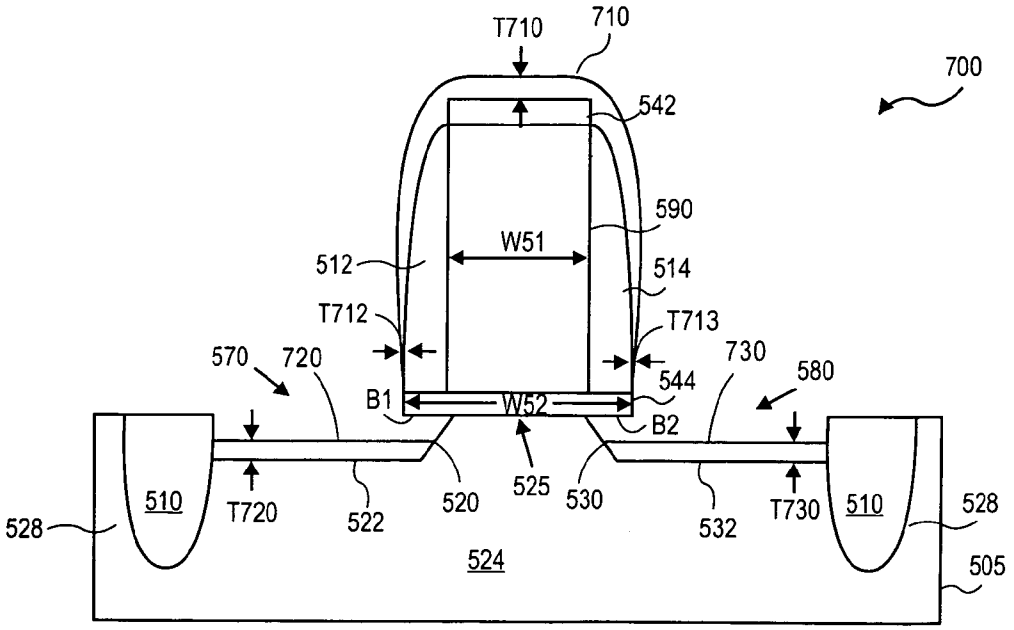
T710
710
700
542
590
W51
512
514
T712
T713
570
720
730
580
544
B1
W52
B2
525
510
T720
522
520
530
532
T730
510
528
528
524
505

FIG. 7

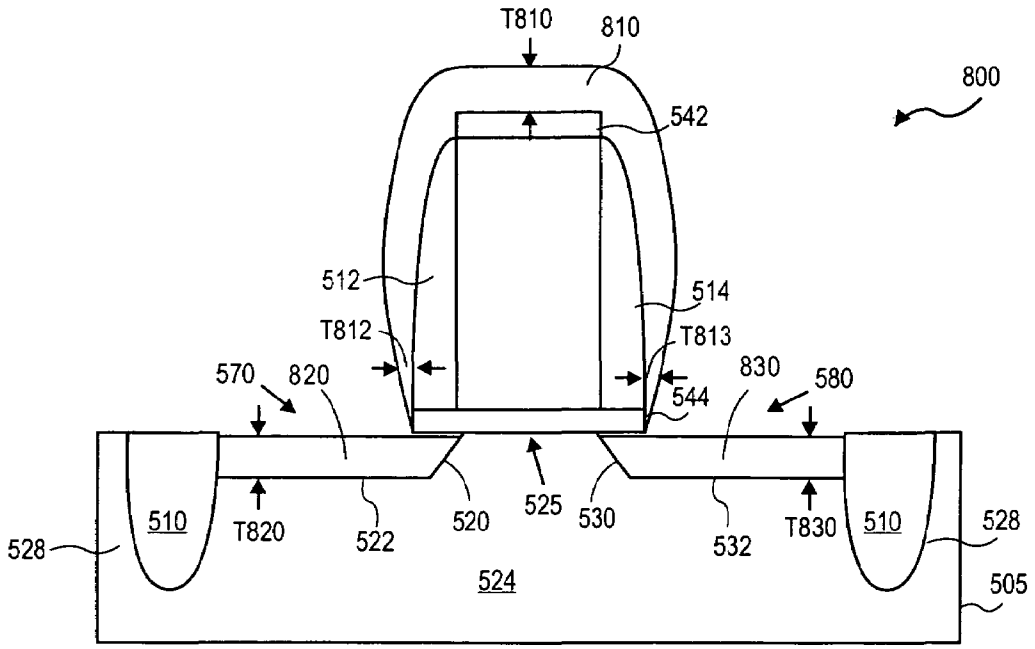
T810
810
800
542
512
514
T812
T813
570
820
830
580
544
510
T820
522
520
525
530
532
T830
510
528
528
524
505

FIG. 8

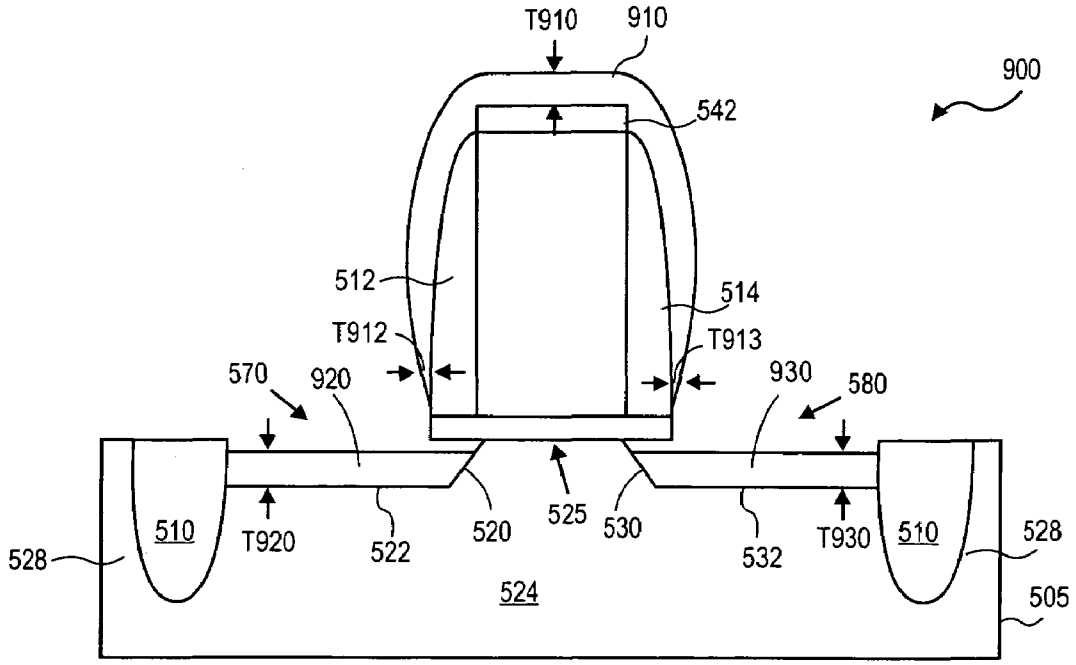
T910
910
900
542
512
514
T912
T913
570
920
930
580
510
T920
522
520
525
530
532
T930
510
528
528
524
505

FIG. 9

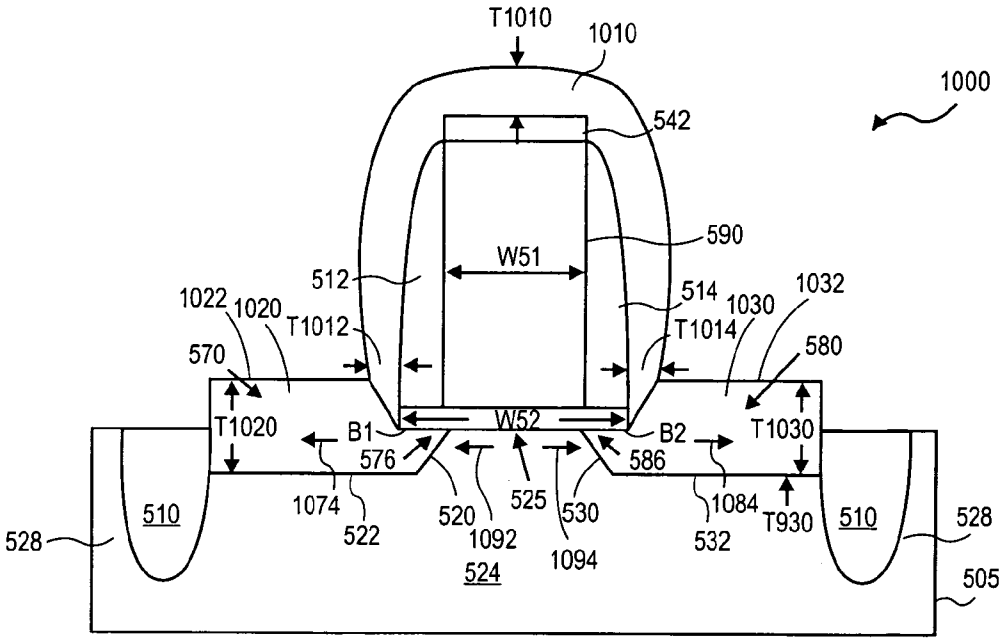
T1010
1010
1000
542
590
W51
512
514
1022
1020
T1012
T1014
1030
1032
580
570
T1020
B1
W52
B2
T1030
576
586
1074
522
520
1092
525
530
1094
1084
532
T930
510
510
528
528
524
505

FIG. 10

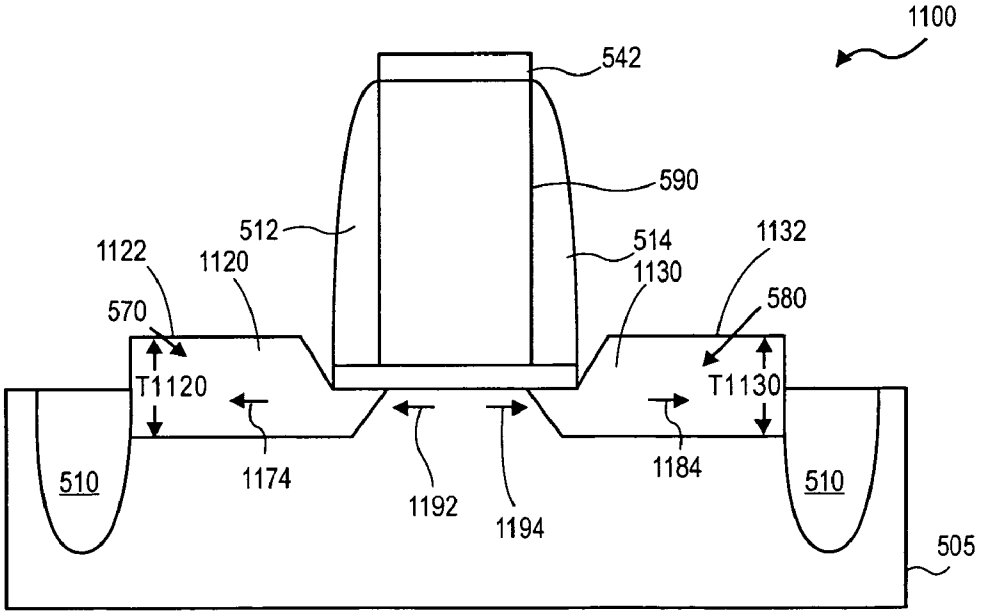
1100
542
590
512
514
1132
1122
1120
1130
580
570
T1120
T1130
1174
1192
1194
1184
510
510
505

FIG. 11

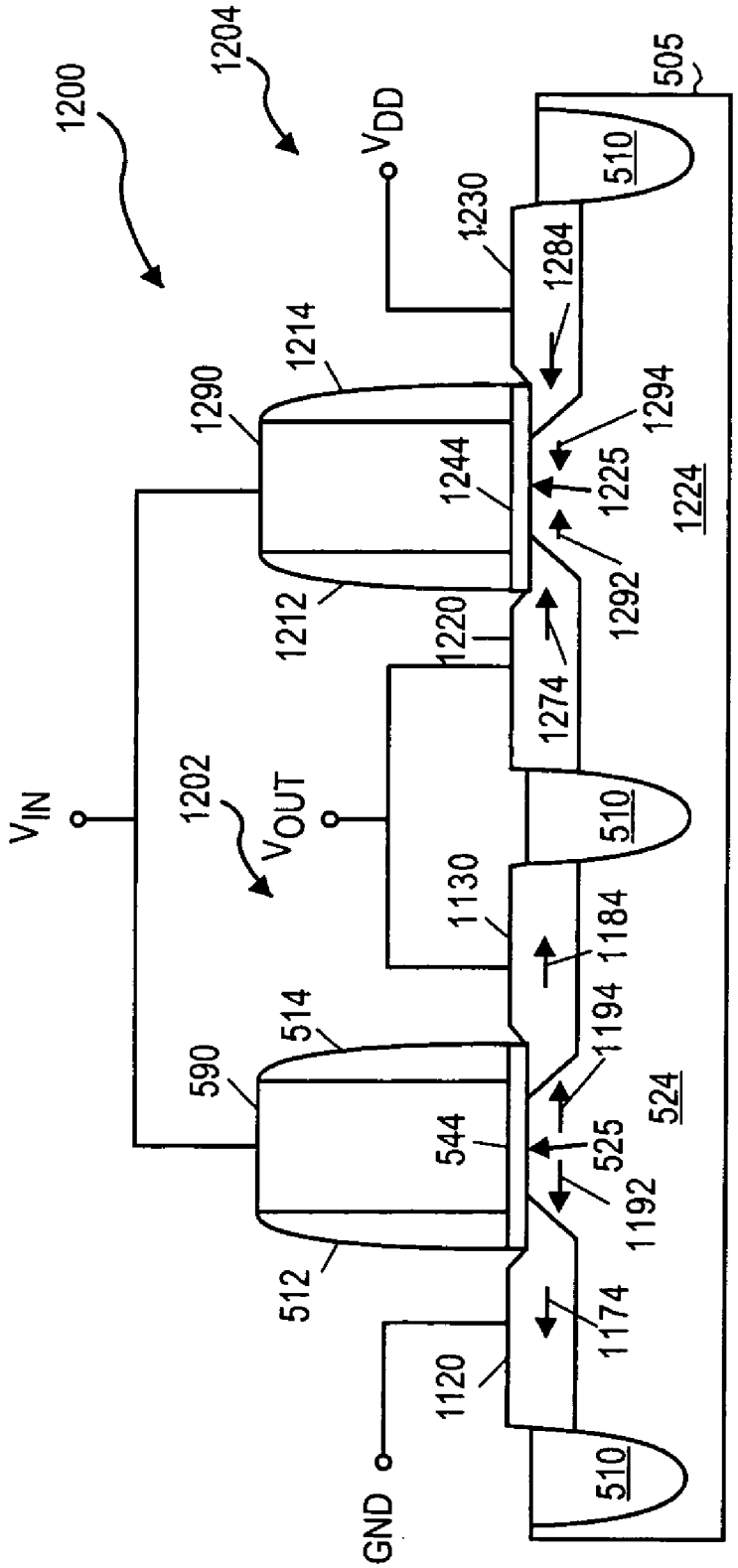
1200
1204
V_{DD}
505
510
1230
1284
1214
1290
1294
1244
1225
1224
1212
1220
1292
1274
V_{IN}
1202
V_{OUT}
510
1130
1184
514
1194
590
524
544
525
1192
512
1174
1120
510
GND

FIG. 12

CMOS TRANSISTOR JUNCTION REGIONS FORMED BY A CVD ETCHING AND DEPOSITION SEQUENCE

BACKGROUND

1. Field

Circuit devices and the manufacture and structure of circuit devices.

2. Background

Increased performance in circuit devices on a substrate (e.g., integrated circuit (IC) transistors, resistors, capacitors, etc. on a semiconductor (e.g., silicon) substrate) is typically a major factor considered during design, manufacture, and operation of those devices. For example, during design and manufacture or forming of metal oxide semiconductor (MOS) transistor devices, such as those used in a complementary metal oxide semiconductor (CMOS), it is often desired to increase movement of electrons in N-type MOS device (n-MOS) channels and to increase movement of positive charged holes in P-type MOS device (p-MOS) channels. A key parameter in assessing device performance is the current delivered at a given design voltage. This parameter is commonly referred to as transistor drive current or saturation current (I_{Dsat}). Drive current is affected by factors that include the transistor's channel mobility and external resistance.

Channel mobility refers to the mobility of carriers (i.e. holes and electrons) in the transistor's channel region. Increased carrier mobility translates directly into increased drive current at a given design voltage and gate length. Carrier mobility can be increased by straining the channel region's silicon lattice. For p-MOS devices, carrier mobility (i.e. hole mobility) is enhanced by generating a compressive strain in the transistor's channel region. For n-MOS devices, carrier mobility (i.e. electron mobility) is enhanced by generating a tensile strain in the transistor's channel region.

Drive current is also influenced by other factors that include: (1) the resistances associated with the ohmic contacts (metal to semiconductor and semiconductor to metal), (2) the resistance within the source/drain region itself, (3) the resistance of the region between the channel region and the source/drain regions (i.e. the tip region), and (4) the interface resistance due to impurity (carbon, nitrogen, oxygen) contamination at the location of the initial substrate-epi-layer interface. The sum of these resistances is commonly referred to as the external resistance.

Conventional tip (also commonly called source drain extensions) region fabrication is done by dopant implantation prior to fabricating the gate spacer dielectric layers. The location of the dopants is concentrated near the top surface of the substrate. This narrow band of dopants leads to high spreading resistance, and limits the current flow from channel to salicide contact. In state of the art replacement source-drain architectures, the shape of the recess is better, but is still not fully optimized with respect to spreading resistance.

BRIEF DESCRIPTION OF THE DRAWINGS

FIG. **1** is a schematic cross-sectional view of a portion of a substrate having a well, gate dielectric, and gate electrode.

FIG. **2** is the schematic substrate of FIG. **1** after forming junction regions having tip regions.

FIG. **3**A shows the substrate of FIG. **2** after forming a thickness of material in the junction regions to form junctions.

FIG. **3**B shows the substrate of FIG. **2** after forming a thickness of material in junction regions having tip implants to form junctions.

FIG. **4** shows a representative CMOS structure.

FIG. **5** is the schematic cross-sectional view of a portion of a substrate having a well, gate dielectric, gate electrode, and junction regions having tip regions.

FIG. **6** is the schematic substrate of FIG. **5** after forming a thickness of a crystalline material in the junction regions and a thickness of amorphous material on the gate electrode.

FIG. **7** shows the substrate of FIG. **6** after removing a thickness of the crystalline material and a thickness of the amorphous material.

FIG. **8** shows the substrate of FIG. **7** after forming a subsequent thickness of a crystalline material in the junction regions and a subsequent thickness of the amorphous material on the gate electrode.

FIG. **9** shows the substrate of FIG. **8** after removing a thickness of the crystalline material and the amorphous material.

FIG. **10** shows the substrate of FIG. **9** after forming a thickness of crystalline material in the junction regions to form junctions, and after forming a thickness of amorphous material on the gate electrode.

FIG. **11** shows the substrate of FIG. **10** after removing the amorphous materials.

FIG. **12** shows a representative CMOS structure.

DETAILED DESCRIPTION

Locally straining transistor channel regions may be accomplished by selective epitaxial deposition of source and drain regions with materials that impart a strain in a MOS transistor's channel region. Such process flows may involve etching the substrate material from the source-drain regions of the transistor in one process operation using an etch reactor. A subsequent operation may involve replacing the removed material with Si alloy material in a deposition reactor. The etch reactor and deposition reactor may be physically different and separate. Thus the substrate must be removed from the etch reactor and exposed to atmospheric pressure environments before initiating the Si alloy deposition process. The Si alloy may be pure Si or $Si_{1-x}Ge_x$ or $Si_{1-x}C_x$ and can be undoped or doped with p-type or n-type dopants. The deposition process may be selective or non-selective. According to embodiments provided herein, the etch reactor and deposition reactor may be physically the same.

For example, FIG. **1** is a schematic cross-sectional view of a portion of a substrate having a well, gate dielectric, gate electrode, and tip material. FIG. **1** shows apparatus **100** including substrate **120** having gate dielectric **144** formed on top surface **125** of substrate **120** over well **124**. Gate electrode **190** is formed on gate dielectric **144** and has spacers **112** and **114** formed on its side surfaces. Etch mask **142** is formed on gate electrode **190**. Electrically insulating material **130** is also shown to electrically isolate well **124** from surrounding regions **128**. Surface **170** and surface **180** are shown adjacent to gate electrode **190**. Apparatus **100**, and components thereof described above may be further processed, such as in a semiconductor transistor fabrication process that involves one or more processing chambers, to become or be parts of a p-MOS or n-MOS transistor (e.g., by being parts of a CMOS device).

For example, substrate **120** may include, be formed from, deposited with, or grown from silicon, polycrystalline silicon, single crystal silicon, or various other suitable tech-

nologies for forming a silicon base or substrate, such as a silicon wafer. For example, according to embodiments, substrate **120** may be formed by growing a single crystal silicon substrate base material having a thickness of between 100 Angstroms and 1000 Angstroms of pure silicon. Alternately, substrate **120** may be formed by sufficient chemical vapor deposition (CVD) of various appropriate silicon or silicon alloy materials to form a layer of material having a thickness between one and three micrometers in thickness, such as by CVD to form a thickness of two micrometers in thickness. It is also considered that substrate **120** may be a relaxed, non-relaxed, graded, and/or non-graded silicon alloy material.

As shown in FIG. **1**, substrate **120** includes well **124**, such as an N-type well having an electrically negative charge on a P-type material having an electrically positive charge formed by doping substrate **120** during formation or after formation of substrate **120**. Specifically, to form well **124**, top surface **125** may be doped with phosphorous, arsenic, and/or antimony to form an N-type well of a p-MOS transistor (e.g., a p-MOS device of a CMOS device). Doping as described herein may be performed, for example, by angled doping, such as to implant ions or atoms of the above-noted dopants into a material, such as substrate **120** or a material formed in or on substrate **120**. For example, doping may include ion implantation performed by an ion "gun", or an ion "implanter" to bombard surfaces of a substrate with accelerated high velocity ions to implant ions to form doped material. The accelerated ions may penetrate through the surface of the material and scatter into the material below to form a depth of doped material. For example, top surface **125** may be selectively doped, such as by placing a mask over the non-selected area or areas to block the introduction of the dopant from entering the non-selected are or areas, while allowing the dopant to dope well **124**.

Alternatively, to form well **124**, top surface **125** may be doped with boron and/or aluminum to form a P-type well of a n-MOS transistor (e.g., a n-MOS device of a CMOS device).

Thus, well **124** may be a material suitable for forming a "channel" of a transistor device. For example, a transistor device channel maybe defined as a portion of the material of well **124** under top surface **125** and between surfaces **170** and **180**, or junctions formed adjacent to, consuming portions of, and/or including surfaces **170** and **180**.

FIG. **1** shows electrically insulating material **130** between well **124** and surrounding regions **128**. Material **130** may be various appropriate electrically insulating materials and structures sufficient for electrically isolating well **124** from surrounding regions **128**. For example, surrounding regions **128** may be well regions of adjacent or related transistor devices. Specifically, material **130** may be shallow trench isolation (STI) formed between an N-type well of a p-MOS device (e.g., where well **124** has an N-type well) and other regions of substrate **120** to electrically isolate the N-type well from the other regions. Similarly, material **130** may be STI formed between a P-type well of a n-MOS device (e.g., where well **124** is a P-type well) and other regions of substrate **120**. Thus, material **130** may isolate well **124** from other regions of substrate **120** to provide for functionality of a transistor formed on top surface **125** (e.g., to isolate well **124** from an adjacent well of an associated device paired with well **124** to form a CMOS device). In one example, where well **124** is an N-type well, one of regions **128** may be a related P-type well of an n-MOS device paired with a P-MOS device formed on top surface **125** to form a CMOS device. Alternatively, where well **124** is a P-type well, one of regions **128** may be a related N-type well of a p-MOS device paired with a n-MOS device formed on top surface **125** to form a CMOS device. Material **130** may be formed by doping through a layer of material located above material **130**, and/or may be formed before or after forming well **124**.

As shown in FIG. **1**, gate dielectric **144** has width W**2**. Gate electrode **190** is shown formed on gate dielectric **144** with width W**1**. The thickness of gate dielectric **144** may be generally consistent throughout and conform to the topography of top surface **125** along width W**2**. Moreover, gate dielectric **144** may be formed of a material having a relatively high dielectric constant (e.g., a dielectric constant greater than or equal to that of silicon dioxide (SiO_2), or of a material having a relatively low dielectric constant. A thickness of gate dielectric **144** may be between one and five nanometers in thickness. Gate dielectric **144** may be formed by deposition, such as by CVD, atomic layer deposition (ALD), blanket deposition, selective deposition, epitaxial deposition, ultra high vacuum (UHV) CVD, rapid thermal (RT) CVD, reduced pressure (RP) CVD, molecular beam epitaxy (MBE), and/or other appropriate growing, depositing, or forming processes. Gate dielectric **144** may have an appropriate P-type work function for apparatus **100**, such as where apparatus **100** is a p-MOS device. Alternatively, gate dielectric **144** may have an appropriate N-type work function for apparatus **100**, such as where apparatus **100** is an n-MOS device. Specifically, gate dielectric **144** may be formed of dielectrics such as silicon dioxide (SiO_2), hafnium oxide (HfO), hafnium silicate ($HfSiO_4$), zirconium oxide (ZrO), carbon doped oxide (CDO), cubic boron nitride (CBN), phosphosilicate glass (PSG), silicon nitride (Si_3N_4), fluorinated silicate glass (FSG), silicon carbide (SiC), etc.

Gate electrode **190** may be formed, such as by processes described above with respect to forming gate dielectric **144**. Moreover, gate electrode **190** may be formed of various semiconductor or conductor materials, such as silicon, polysilicon, crystal silicon, and/or various other appropriate gate electrode materials. Also, gate electrode **190** may be doped during or after formation. For example, gate electrode **190** may be doped with boron and/or aluminum to form a p-type gate electrode having an electrically positive charge (e.g., for a p-MOS device, which may be part of a CMOS device). Conversely, it is also contemplated, that gate electrode **190** may be doped with phosphorous, arsenic, and/or antimony to form a n-type gate electrode having an electrically negative charge (e.g., for a n-MOSn-MOS device, which may be part of a CMOS device).

Gate electrode **190** may have a thickness appropriate for a p-MOS or n-MOS device, such as when apparatus **100** is a p-MOS or n-MOS device. For example, gate electrode **190** may have a thickness to cause a transistor formed on substrate **120** to have a threshold "ON" voltage between 0.1 and 0.5 volts. In some cases, gate electrode **190** may have a thickness of, for example, between 150 and 2000 Angstroms (e.g., between 15 and 200 nanometers(nm)). Gate electrode **190** may have a work function for responding to a gate electrode of a p-MOS device (e.g., where apparatus **100** is a p-MOS device). Alternatively, gate electrode **190** may have a work function for responding to a gate electrode of a n-MOS device (e.g., where apparatus **100** is a n-MOS device).

FIG. **1** shows spacer **112** and spacer **114** formed on surfaces of gate electrode **190** and gate dielectric **144**. Specifically, spacer **112** and spacer **114** may be formed on sidewall surfaces of gate electrode **190** and on a top surface of gate dielectric **144** (e.g., a surface opposite from substrate

120). Spacers **112** and **114** may be a dielectric material such as silicon nitride (Si_3N_4), silicon dioxide (SiO_2), and/or various other appropriate semiconductor device spacer materials.

FIG. **1** also shows etch mask **142** formed on gate electrode **190**. Etch mask **142** may be a "hard" mask formed of silicon nitride (Si_3N_4), where other material mentioned above for forming gate dielectric **144**. For example, etch mask **142** may be used when forming gate electrode **190**, gate dielectric **144** and/or spacers **112** and **114**. Specifically, portions corresponding to the shape of mask **142** or area around mask **142** may be removed or etched away from above, using mask **142** as an etch stop.

For example, spacers **112** and **114** may be formed by first depositing dielectric material, similar to dielectric materials described above for gate dielectric **144**, conformally along surfaces of substrate **120**, sidewall surfaces of gate electrode **190**, and a top surface etch mask **142**. Then the formed or deposited dielectric material may be patterned and etched to create spacers **112** and **114**.

According to embodiments, portions of well **124** and substrate **120**, such as at surfaces **170** and surface **180**, may be removed to form a junction regions in substrate **120** adjacent to gate electrode **190**. For example, junctions adjacent to gate electrode **190** may be formed by removing portions of substrate **120** at surfaces **170** and **180** to form junction regions or recesses in substrate **120**, and then forming or depositing a junction material into the junction regions. Such removal may include "source-drain recess" etching, so that the junction regions extend under gate dielectric **144**.

For example, FIG. **2** is the schematic substrate of FIG. **1** after forming junction regions having tip regions. FIG. **2** shows junction region **270**, such as a recess formed in surface **170** of substrate **120** adjacent to gate electrode **190** and source-drain recess below a bottom surface of gate dielectric **144**. Similarly, FIG. **2** shows junction region **280**, such a recess formed in surface **180** of substrate **120** adjacent to gate electrode **190**, and source-drain recess below a bottom surface of gate dielectric **144**.

Junction region **270** defines substrate surface **222** (e.g., a base surface of junction region **270**), facet **220**, and tip region **276**. Tip region **276** is between facet **220** and the bottom surface of gate dielectric **144**. For instance, it can be said that tip region **276** defines facet **220** having angle A**1** between facet **220** and the bottom surface of gate dielectric **144** Similarly, junction region **280** defines substrate surface **232**, facet **230**, and tip region **286**. Tip region **286** is between facet **230** and the gate dielectric **144**. Thus, tip region **286** defines facet **230** having angle A**2** between facet **230** and bottom surface of gate dielectric **144**.

According to embodiments, preferred angles A**1** and/or A**2** may be angles of between 52° (degrees) and 57°. For example, angles A**1** and A**2** may both be approximately 52°, 53°, 54°, 54.7°, 54.74°, 54.739137°, 54.8°, 55°, 56°. This range of angles corresponds roughly to alignment with the {111} family of planes as described using conventional Miller index nomenclature. Alternative embodiments allow the A**1** and A**2** angles to be in the range 0° to 90°, and excluding the preferred range listed above.

According to embodiments, tip regions **276** and **286** may extend under spacer **112**, spacer **114**, and/or gate electrode **190**. For example, tip regions **276** and **286** may extend along top surface **125** under the bottom surface of gate dielectric **144** from a width equal to width W**2** to a width of less than width W**2**, such as a width of greater than zero. Thus, facets **220** and **230** may contact the bottom surface of gate dielectric **144** adjacent to top surface **125** of substrate **120** to form a channel under top surface **125** between facets **220** and **230** (e.g., a channel of a transistor formed in apparatus **200**), where facets **220** and **230** may each extend under gate dielectric **144** by a distance of between zero and one-half of width W**2**. Thus, portions of substrate **120** may be removed to form facets **220** and **230** contacting and extending under the bottom surface of gate dielectric **144** to contact the bottom surface of gate dielectric **144** under spacer **112**, spacer **114**, and/or gate electrode **190**.

It is contemplated that junction region **270** and/or **280** may have a depth below top surface **125** between 800 angstroms and 1300 angstroms. Moreover, junction region **270** and/or **280** may have a width or size appropriate for depositing material into those regions to form junction of a transistor device (e.g., a p-MOS or n-MOS device of a CMOS device).

Junction region **270** and/or **280** may be referred to as "source-drain regions" or "diffusion regions." Also, when an appropriate material is formed, deposited, or grown in junction regions **270** and **280**, the resulting material may be referred to as a "junction," a "source," a "drain," or a "diffusion region."

According to embodiments, junction regions **270** and **280** may be formed by removing undesired portions of substrate **120**, such as at surfaces **170** and **180**. For instance, a patterning two operation process may be used where in the first operation, a photo-resist is used to define regions of a hardmask to be removed (e.g., a hardmask layer over apparatus **100** of FIG. **1**). Those regions of the hardmask are then etched away. After that etching, the photo-resist is removed, and a recess etch is performed to form junction regions **270** and **280** by removing undesired portions of substrate **120** (e.g., etching away the undesired exposed portions, not covered by the remaining hardmask). Photolithographic patterning using an etch stop, dielectric material, photo resist, or other suitable material for masking and etch processing (e.g., a negative photo-resist mask, positive photo-resist mask, silicon dioxide SiO_2), or silicon nitride Si_3N_4) may also be used to define an area to be protected while source-drain recess etching to form junction regions **270** and **280**, as shown in FIG. **2**.

Suitable non-plasma etch chemistries for removing undesired portions of substrate **120**, such as at surfaces **170** and **180** to form junction regions **270** and **280** include chlorine (Cl_2), hydrochloric acid (HCl), fluorine (F_2), bromine (Br_2), HBr and/or other etch processes capable of removing portions of substrate **120**. Plasma etches including chemistries of SF_6, NF_3 or the like are possible as alternative embodiments. Typical epitaxial deposition equipment types available today (e.g., chambers or reactors) can perform the above noted non-plasma etches with little or no modification. A change to enable plasma etching as noted above and CVD deposition in the same reactor is possible, but adds a great deal of complexity to the hardware (e.g., chambers or reactors).

Suitable chambers for etching junction regions **270** and **280** include a CVD chamber, an ALD chamber, a UHVCVD chamber, an RTCVD chamber, an RPCVD chamber, an MBE chamber, a "batch" UHV CVD chamber, a cold-wall UHV CVD chamber, an atmospheric pressure (AP) CVD chamber a low-pressure (LP) CVD chamber, or a chamber reactor that combines the functionality of one or more of these chambers or reactors.

Moreover, etching to form junction regions **270** and **280** may be performed at a pressure of between 1E-4 Torr and 1,000 Torr (e.g., at a pressures within a one decimal range

of 1E-3, 1E-2, 0.1, 1.0, 10, 100, or 1000 Torr) in either a "cold-wall" or "hot-wall" reactor. Also, etching to form junction regions **270** and **280** may be performed at typical epitaxial silicon alloy deposition temperatures, for example from 500 to 900° C. A "cold-wall" reactor may be described as a reactor having vessel walls that, during deposition or etching, are at room temperature. A "cold-wall" reactor may have vessel walls fabricated from metal. Alternatively, a "hot-wall" reactor may have vessel wall fabricated from quartz or other ceramics that are at a temperature greater than room temperature during deposition or etching.

For example, junction region **270** and/or **280** may be formed by removing or etching portions of substrate **120** with etchant gas that may contain mixtures including: chlorine (Cl_2), hydrochloric acid (HCl), hydrogen (H_2), and/or nitrogen (N_2). Specifically, an etchant or gas including one or more of the above-noted gases may flow into a chamber in which apparatus **100** is housed at a rate of between five standard cubic centimeters per minute (SCCM) and ten SCCM, at a temperature of between 500 degrees Celsius (° C.) and 800° C. (e.g., a temperature of 500, 525, 540, 550, 560, 575, 600, 625, 650, 675, 700, 750, or 800° C.) for between 30 and 90 minutes (e.g,. a period of 30, 35, 40, 45, 50, 55, 60, 65, 75, 85, or 90 minutes) to etch portions of substrate **120** at surfaces **170** and **180**. According to embodiments, junction region **270** and/or **280** may be formed at a pressure of between 3E-3 Torr and 7E-3 Torr (e.g., 3E-3, 3.5E-3, 4E-3, 4.5E-3, 5E-3, 5.5E-3, 6E-3, 6.5E-3, or 7E-3). In some cases, chlorine gas is used to etch junction regions **270** and **280** in a chamber as described above, at a temperature of 650° C. and at a pressure of between 3E-3 Torr and 7E-3 Torr, in a 300 millimeter (mm) UHV CVD cold-wall single wafer reactor.

For example, FIG. **3**A shows the substrate of FIG. **2** after forming thickness of a material in the junction regions to form junctions. FIG. **3**A shows apparatus **300** having material **370** formed in junction region **270** and material **380** formed in junction region **280**. Material **370** and/or material **380** may be described as a junction, source, drain, or diffusion region. In addition, material **370** may be formed to have junction top surface **372** that is superior to top surface **125** of substrate **120**. Specifically, material **370** may be a thickness of silicon germanium material having a lattice spacing greater than a lattice spacing of the material of substrate **120**. Likewise, material **380** may be formed to have junction top surface **382** that is also superior to top surface **125**. For example, material **370** may be thickness T**4** of an epitaxial thickness of crystalline silicon-germanium alloy, geranium, or silicon material (e.g., SiGe, such as Si_xGe_{1-x}), where the size and/or thickness T**4** is sufficient to cause a compressive strain in substrate **120**. The material may be pure or doped with p-type dopants such as B and Al. Alternatively, material **370** may be thickness of T**4** of an epitaxial thickness of crystalline silicon-carbon alloy material (e.g., Si_xC_{1-x}), where the size and/or thickness of T**4** is sufficient to cause a tensile strain in substrate **120**. The material may be pure or doped with n-type dopants such as P, As and Sb. For example, material **370** may be a thickness of silicon-carbon alloy (Si_xC_{1-x}) having a lattice spacing smaller than a lattice spacing of substrate **120**. Similarly, material **380** may be a thickness T**5** of an epitaxial thickness of crystalline silicon-germanium alloy (Si_xGe_{1-x}) having sufficient size and/or thickness T**5** to cause a strain in substrate **120**.

For example, as shown in FIG. **3**A, material **370** may cause compressive strain **374** towards a portion of substrate **120** under top surface **125**, and material **380** may cause compressive strain **384** towards the same portion of substrate **120**. Thus, strain **374** may cause compressive strain **392** and strain **384** may cause compressive strain **394** in a channel of substrate **120** between material **370** and material **380** (e.g., a compressive strain between p-type junction material formed in junction regions **270** and **280** and in the channel of apparatus **300**, where apparatus **300** is a p-MOS device). It can be appreciated that compressive strains **392** and **394** may be strains between facets **220** and **230** sufficient to increase carrier mobility (e.g., mobility of holes in the channel of well **124**) between material **370** and material **380**. In other words, a channel in substrate **120** may be under a compressive strain caused by a lattice spacing of material **370** and/or material **380** (e.g., where material **370** and material **380** are silicon-germanium alloy material) being larger than a lattice spacing of the material of substrate **120**.

In another example, material **370** and material **380** may cause a tensile strain in a channel of apparatus **300** (e.g., if the direction of strains **374**, **384**, **392**, and **394** were reversed). In this case a tensile strain in the channel of apparatus **300**, where apparatus **300** is a n-MOS device may be a strain between facets **220** and **230** sufficient to increase carrier mobility (e.g., mobility of electrons in the channel of well **124**) between material **370** and material **380**. Correspondingly, a channel in substrate **120** may be under a tensile strain caused by a lattice spacing of material **370** and/or material **380** (e.g., where those materials are silicon-carbon alloy) being larger than a lattice spacing of new material of substrate **120**.

Material **370** and material **380** may be deposited by chemical vapor deposition or other processes described above for forming gate dielectric **144**. For example, material **370** and material **380** may be formed in a chamber as described above for forming junction regions **270** and **280**, and for forming gate dielectric **144**. Suitable chambers for forming, growing, or depositing materials **370** and **380** include equipment capable of selective deposition of silicon-based elemental or alloyed films. For instance, some suitable chambers for forming material **370** and material **380** include a CVD chamber, an ALD chamber, a UHVCVD chamber, an RTCVD chamber, an RPCVD chamber, an MBE chamber, a "batch" UHV CVD chamber, a cold-wall UHV CVD chamber, an atmospheric pressure (AP) CVD chamber a low-pressure (LP) CVD chamber, or a chamber reactor that combines the functionality of one or more of these chambers or reactors.

Suitable deposition techniques include thermal decomposition of hydride or chlorinated hydride precursor gases on silicon wafers. Deposition pressure may be between 1E-4 Torr and 1000 Torr (e.g., at a pressures within a one decimal range of 1E-3, 1E-2, 0.1, 1.0, 10, 100, or 1000 Torr). Deposition may occur in a cold-wall or hot-wall reactor. Specifically, material **370** and **380** may be formed by selective deposition of silane, disilane, dichlorosilane, and/or methylsilane gas to chemically bond a thickness of silicon alloy or silicon elemental material to surfaces of junction region **270** and **280** to form junctions therein. In an alternative embodiment, this can be performed by non-selective deposition using trisilane as the silicon precursor, and the same alloy and dopant precursor gases mentioned below.

In some process, deposition is performed in a 300 mm epitaxial UHV CVD cold-wall single wafer reactor. Appropriate temperatures for forming material **370** and **380** include room temperature, or a temperature of between 500 and 800° C., and at a pressure of between 300 E-3 Torr and 7 E-3 Torr (e.g., 3E-3, 3.5E-3, 4E-3, 4.5E-3, 5E-3, 5.5E-3, 6E-3, 6.5E-3, or 7E-3). In some examples, material **370** and

380 is formed by introducing disilane at between seven standard cubic centimeters per minute (SCCM) and 20 SCCM, and introducing methylsilane at between 10 SCCM and 300 SCCM. For example, thickness T4 and/or T5 may be a thickness of between 1000 angstroms and 1500 angstroms, such as a thickness of 1050, 1100, 1150, or 1200 angstroms.

Material 370 and 380 may be doped during formation and/or doped after formation. In some embodiments, material 370 and/or 380 may be alloyed or doped during deposition when the silicon precursor flow is accompanied with germane, methylsilane, acetylene, diborane, boron chloride, phosphine, arsine, and/or stibine. For instance, during or after formation, material 370 and 380 may be doped, such as by boron and/or aluminum to form P-type junction material having an electronically positive charge. In one embodiment, material 370 and material 380 may be formed as boron and/or aluminum doped epitaxial crystalline silicon-germanium alloy material in junction regions 270 and 280, and then subsequently doped with additional boron and/or aluminum.

Alternatively, during and/or after formation, material 370 and 380 may be doped, such as by phosphorous, arsenic, and/or antimony to form an N-type junction material having an electrically negative charge. In one embodiment, material 370 and 380 may be silicon carbon alloy epitaxial crystalline material formed in junction regions 270 and 280, and subsequently doped with additional phosphorous, arsenic, and/or antimony.

Thus, material 370 and 380 may be $(Si_x(Ge)_{1-x}$:(B,Al) for p-MOS and Si_xC_{1-x}:(P,As,Sb) for n-MOS. Subsequent to forming material 370 and 380, apparatus 300 may be thermally treated, such as by annealing.

Moreover, according to embodiments, forming of junction regions 270 and 280, and forming, depositing, or growing of material 370 and material 380 may occur in the in the same chamber, in the same reactor, at the same pressure, at the same temperature, in the same setting, and/or in a chamber or reactor without breaking a seal or vacuum of the chamber or reactor. The process consists of an initial set of etch gas flows, followed by a set of deposition gas flows. Thus, forming material 370 and 380 may be performed in-situ with forming junction regions 270 and 280. It can be appreciated that forming of junction regions 270 and 280 in the same chamber used to deposit material 370 and 380, may reduce undesired impurities including carbon, oxygen and nitrogen in surfaces of junction regions 270 and 280, and material 370 and 380. A suitable chamber for forming of junction regions 270 and 280, and for forming material 370 and 380 includes chambers described above for forming junction regions 270 and 280.

For instance, some suitable chambers for forming of junction regions 270 and 280, and for forming material 370 and 380 in the same chamber include a CVD chamber, an ALD chamber, a UHVCVD chamber, an RTCVD chamber, an RPCVD chamber, an MBE chamber, a "batch" UHV CVD chamber, a cold-wall UHV CVD chamber, an atmospheric pressure (AP) CVD chamber a low-pressure (LP) CVD chamber, or a chamber reactor that combines the functionality of one or more of these chambers or reactors. Deposition mode may be selective or non-selective. Moreover, forming of junction regions 270 and 280 and depositing material 370 and 380 can be performed in the same chamber in the same vacuum (e.g., without opening the chamber, opening a seal of the chamber or exposing the inside of the chamber to air from outside of the chamber). For example, junction regions 270 and 280, and material 370 and 380 can be formed in a chamber having a pressure of between 1E-4 Torr and 1000 Torr (e.g., at a pressures within a one decimal range of 1E-3, 1E-2, 0.1, 1.0, 10, 100, or 1000 Torr) without opening the chamber, opening a seal of the chamber or exposing the inside of the chamber to air from outside of the chamber.

In one example, a process to perform in-situ recessed source drain etch (e.g., performing junction regions 270 and 280) followed immediately by deposition of source drain material (e.g., deposition of material 370 and 380) is performed in a UHV CVD chamber (e.g., a 300 mm epitaxial UHV CVD cold-walled single-wafer reactor. This process uses a set of etch gases and a set of deposition gases to form junction regions having facets 220 and 230, and then to selectively deposit silicon or silicon alloy material to form junctions on those facets. Moreover, hydrogen (H_2) and/or nitrogen (N_2) may be used as carrier gases during the etch and/or deposition processes. It is observed that the deposition of materials 370 and 380 may follow the etching of regions 270 and 280 immediately, such as by occurring as the next operation in the processing of apparatus 200, occurring before a seal or vacuum of the chamber is opened, occurring within 30 minutes of forming a recess in regions 270 and 280, and/or occurring after a "pump out" of the chamber to remove the etchant or gas used to form regions 270 and 280.

In one example, an etch process using a flow rate of pure chlorine gas of between five and ten SCCM for a period of between ten and 300 minutes (e.g., a period of 30, 40, 50, 60, 70, 80, 90, 100 or 120 minutes) is used to form regions 270 and 280. Following pump-out of the pure chlorine gas, a deposition process occurs to form materials 370 and 380 in regions 270 and 280, in the same chamber, without exposing the inside of the chamber to the outside air.

The deposition process may include a flow rate of between seven and 20 SCCM of disilane and between ten and 30 SCCM of methylsilane for a period of between ten and 200 seconds (e.g., a period of 10, 15, 20, 25, 30, 35, 40, 45, 50, 60, 70, 80 or 90 seconds), the disilane and methylsilane are then pumped out during a five-second period, this pump-out period is followed by introduction of a pure chlorine gas at a flow rate of between five and 15 SCCM for a period of between ten and 200 seconds (e.g., a period of 10, 15, 20, 25, 30, 35, 40,45, 50, 60, 70, 80 or 90 seconds). The chlorine gas is then pumped out for a period of 5 seconds. The introduction of disilane, methylsilane, and subsequent chlorine etch are repeated between 50 and 100 time (e.g., by repeating 70 times, 75 times, 80 times, 85 times, or another number of times between 50 and 100 times) to form material 370 and 380.

In one example, recessed source drain etch is performed in-situ with deposition of the source drain material in a 300 millimeter (mm) wafer UHV CVD cold-wall single wafer reactor. First, junction regions 270 and 280 are formed by removing or etching portions of substrate 120 with pure chlorine flowing into the chamber at a rate of between five standard cubic centimeters per minute (SCCM) and ten SCCM for one hour while the reactor is kept at a temperature of 650 degrees Celsius. Junction regions 270 and 280 are formed to a depth of 1000 angstroms.

Next, material 370 and 380 are formed in regions 270 and 280 "immediately" after etching (e.g., no other processing is performed between pumping out the chlorine etchant and depositing material 370 and 380) by a standard MOS integration while the reactor is kept at a temperature of 650 degrees Celsius. For instance, material 370 and 380 are

formed or deposited by introducing pure disilane at a flow rate of between seven and 20 SCCM and ten percent methylsilane in H_2 at a flow rate of between 10 and 30 SCCM for a period of 30 seconds, and the pumping out for a period of five seconds. The pump-out period is followed by introduction of pure chlorine gas at a flow rate of between five and 15 SCCM for a period 30 seconds, and the pumping out for a period of five seconds.

The sequence of introducing disilane and methylsilane, pumping out, introducing chlorine and pumping out is repeated 75 times to form material **370** and **380** of Si—C alloy with one atomic percent of C and a thickness of 1100 angstroms. Moreover, it can be appreciated that the seal or vacuum of the reactor can be kept intact during the 75 iterations. Similarly, the pressure of the chamber and a temperature of 650 degrees Celsius may be maintained during the 75 iterations.

Thus, material **370** and **380** may be formed as an epitaxial layer of Si—C alloy with an atomic percent of C of between 0.1 and two percent (e.g., one percent) of carbon and a thickness of 1100 angstroms. Alternatively, material **370** and **380** may be formed of a SiGe alloy with an atomic percentage of Ge of between 10 and 40 percent (e.g., **20** percent) and a thickness of 1100 angstroms.

It can be appreciated that by forming junction regions **270** and **280**, and material **370** and **380** by processes described above and/or in the same chamber without breaking vacuum or a seal of the chamber forms very high-quality epitaxial film junction region material **370** and **380** in junction regions **270** and **280** without interfacial contaminants, and strained channels for increased electron or hole mobility, as well as increased drive current in at least the following four ways:

1. Facets **220** and **230** may be well defined high quality interfaces for the epitaxial material at the junction location due to high purity. For example, the formation of regions **270** and **280** (including facets **220** and **230**) and the formation of material **370** and **380** in a single chamber as described above may decrease the interface resistance due to impurity (e.g., by decreasing the amount of carbon, nitrogen, oxygen in the interface) contamination at the location of the initial substrate-epi-layer interface (e.g., between facets **220** and **230** and material **370** and **380**), leading to better interface control, lower $Rex_{external}$ and higher drive current. Similarly, such formation may decrease in interface impurity contamination in material **370** and **380** allowing for higher dopant concentrations in material **370** and **380** (e.g., such as boron, aluminum, phosphorus, arsenic and/or antimony), and providing lower resistance within the source/drain region itself, thus causing better interface control, lower $R_{external}$ and higher drive current.
2. The shape of the source-drain recess with facets **220** and **230** angled near 54° provides optimum current spreading. For example, the angle, alignment, and planar characteristics of facets **220** and **230** formed as described above may provide optimal tip shapes and orientations that allow current to spread through the facets and tips (e.g., current flowing between material **370** and **380** and the channel region) more evenly and easily (e.g., in greater overall magnitude or amount) causing lower resistance of the region between the channel region and material **370** and **380** (i.e. the tip region), leading to lower $Rex_{eternal}$ and higher drive current.
3. Facets **220** and **230** angled near 54° also provide maximum resistance to dopant over-run that can cause shorts below the channel, as well as short channel effects. The recess and tip regions **376** and **486** can be placed in closer proximity to the channel without fear of short channel effects or shorting.
4. Strain relaxation by formation of misfit dislocations is enhanced when interface contamination is present. This invention allows use of higher strain in deposited films without relaxation. For instance, the formation of regions **270** and **280** (including facets **220** and **230**) and the formation of material **370** and **380** in a single chamber as described above may allow for higher germanium or carbon concentrations in material **370** and **380**, leading to higher amounts of strain in the channel causing higher carrier mobility and drive current during transistor use.

Moreover, when forming junction regions **270** and **280**, and material **370** and **380** by processes described above, the native oxide build-up at the junction/substrate interface is reduced (e.g., the interface between material **370** and **380** and well **124** of substrate **120**); the carbon, oxygen, and/or nitrogen contamination at those interfaces is reduced; the need for wet cleans (e.g., and processing queue time restrictions required for the cleans) is not necessary; the number of tool types required during processing is reduced; loading in nested regions is reduced; planar, smooth, and appropriately oriented tip profiles (e.g., for tips **376** and **386**) with (1,1,1) facets are produced; electron and/or hole mobility in the channel is improved due to strain from (Si_xGe_{1-x}):B,Al for p-MOS and (Si_xC_{1-x}):P, As, Sb for n-MOS within junction regions); reduces $Rex_{external}$ is reduced due to the high concentration of dopants allowable (e.g., phosphorous or boron doped in the junctions during and/or after epitaxial deposition to form (Si_xGe_{1-x}):B,Al for p-MOS and (Si_xC_{1-x}):P, As, Sb for n-MOS.

In addition, the concepts described above can be applied to form a transistor having junction regions (e.g., source drain regions) that extend under the spacers but not under the gate electrode. In such a case, tip implants (e.g., doped substrate material) may be formed adjacent to the junction regions under the gate electrode. For instance, FIG. **3**B shows the substrate of FIG. **2** after forming a thickness of material in junction regions having tip implants to form junctions. FIG. **3**B shows junction regions **270** and **280** (e.g., source drain regions) extending under spacers **112** and **114** but not under the gate electrode **190**. Also shown, tip implants **354** and **364** (e.g., doped substrate material) may be formed adjacent to the junction regions under the gate electrode. Tip implants **354** and **364** may be formed by standard process in the industry, such as by doping substrate **120** during formation or after formation of substrate **120**. Specifically, to form well **124**, top surface **125** may be doped with boron and/or aluminum to form p-type tip implants of a p-MOS transistor. After doping the surface of substrate **120** to form the p-type material of the tip implants, portions of the p-type material may be removed or etched to form junction regions **270** and **280** as described above with respect to FIG. **2**. Thus, as shown in FIG. **3**B facets **320** and **330** may be described as having tips (e.g., tip implants) fabricated from deposited material formed under the bottom surface of the gate dielectric.

Similar to FIG. **3**A, FIG. **3**B, shows that material **370** may cause compressive strain **374** towards a portion of substrate **120** under top surface **125**, and material **380** may cause compressive strain **384** towards the same portion of substrate **120**. Thus, strain **374** may cause compressive strain **392** and strain **384** may cause compressive strain **394** in a channel of substrate **120** between tip implants **354** and **364**.

It can be appreciated that compressive strains **392** and **394** may be strains between facets **220** and **230** and tip implants **354** and **364** sufficient to increase carrier mobility (e.g., mobility of holes in the channel of well **124**) between material **370** and material **380** and tip implants **354** and **364**.

In another example, material **370** and material **380** may cause a tensile strain in a channel of apparatus **300** (e.g., if the direction of strains **374**, **384**, **392**, and **394** were reversed). In this case a tensile strain in the channel of apparatus **300**, where apparatus **300** is a n-MOS device may be a strain between facets **220** and **230** and tip implants **354** and **364** sufficient to increase carrier mobility (e.g., mobility of electrons in the channel of well **124**) between material **370** and material **380**.

For example, FIG. **4** shows a representative CMOS structure. FIG. **4** shows CMOS device **400** having p-MOS device, such as a p-MOS embodiment of apparatus **300** as described above with respect to FIGS. **3**A and **3**B, connected to n-MOS transistor device **478** in typical fashion. Substrate **120** includes P-type well **422** related to N-type well **124** for forming CMOS device **400**, such that P-type well **422** is part of n-MOS transistor device **478** formed on a second area of substrate **120** and defining a different second interface surface **425** of substrate **120** adjacent to N-type well **124**. Specifically, for instance, n-MOS device **478** may be formed adjacent to p-MOS apparatus **300** by having n-MOS device **478** electrically isolated from p-MOS apparatus **300** by electrically insulating material **130** as described herein. Moreover, n-MOS device **478** may include a channel below gate dielectric **444** which is below gate electrode **490**, and between N-type junctions **470** and **480**. n-MOS device **478** is also shown with spacers **412** and **414**. n-MOS device **478** may be an n-MOS embodiment of apparatus **300** as described above with respect to FIGS. **3**A and B. Thus, CMOS device **400** has ground GND, input voltage V_{in}, output voltage V_{out}, and bias voltage V_{DD}.

According to embodiments, the technology and processes described above with respect to FIGS. **1**–**4**, may or may not be combined with a process for blanket or non-selective deposition of an epitaxial thickness of crystalline material into junction regions to form junctions and a conformal thickness of an amorphous material over a gate electrode, such as during formation of a transistor device. For example, the technology and processes described above with respect to FIGS. **1**–**4**, may or may not be combined with the processes and devices described below with respect to FIGS. **5**–**12**.

FIG. **5** is the schematic cross-sectional view of a portion of a substrate having a well, gate dielectric, gate electrode, and junction regions having tip regions. FIG. **5** shows apparatus **500** including substrate **505** having gate dielectric **544** formed on top surface **525** of substrate **505** over well **524**. Gate electrode **590** is formed on gate dielectric **544** and has spacers **512** and **514** formed on its side surfaces. Etch mask **542** is formed on gate electrode **590**. Electrically insulating material **510** is also shown to electrically isolate well **524** from surrounding regions **528**. Junction regions **570** and **580** are shown adjacent to gate electrode **590**. Apparatus **500**, and components thereof described above may be further processed, such as in a semiconductor transistor fabrication process that involves one or more processing chambers, to become or be parts of a p-MOS or n-MOS transistor (e.g., by being parts of a CMOS device).

Features, of FIG. **5** may or may not "correspond" to features of FIG. **1** as described above (e.g., "correspond," such as by having corresponding or similar features, materials, doping, widths, lengths, depths, thicknesses, and functionality; being formed in corresponding or similar chambers or reactors, and/or being formed by corresponding or similar processes). For example, in FIG. **5**, substrate **505** may correspond to substrate **120**, etch mask **542** may correspond to etch mask **142**, spacers **512** and **514** may correspond to spacers **112** and **114**, width W**51** may correspond to width W**1**, width W**52** may correspond to width W**2**, and top surface **525** may correspond to top surface **125** of FIG. **1**, as described above.

Moreover, in FIG. **5**, well **524** may correspond to a P-type well of a n-MOS transistor as described above with respect to well **124** of FIG. **1**. Specifically, to form well **524**, top surface **525** may be doped with boron and/or aluminum to form a P-type well of a n-MOS transistor (e.g., a n-MOS device of a CMOS device). Thus, well **524** may be a material suitable for forming a "channel" of an n-MOS transistor device. For example, a transistor device channel maybe defined as a portion of the material of well **524** under top surface **525** and between junction regions **570** and **580**, or junctions formed therein.

Also, in FIG. **5**, material **510** may correspond to material **130**, and surrounding regions **528** may correspond to surrounding regions **128**, of FIG. **1**. Specifically, material **510** may be shallow trench isolation (STI) formed between a P-type well of a n-MOS device (e.g., where well **524** has a P-type well) and other regions of substrate **505** to electrically isolate the P-type well from the other regions (e.g., where one of other regions **528** is an N-type well of a p-MOS device in substrate **505**).

Next, gate dielectric **544** of FIG. **5** may correspond to gate dielectric **144** of FIG. **1** as described above. For instance, gate dielectric **144** may have an appropriate N-type work function for apparatus **500**, such as where apparatus **500** is an n-MOS device.

Furthermore, in FIG. **5**, gate electrode **590** may correspond to gate electrode **190** of FIG. **1** as described above. Thus, gate electrode **590** may be doped with phosphorous, arsenic, and/or antimony to form an N-type electrode material having an electrically negative charge (e.g., for a n-MOS device, which may be part of a CMOS device). Gate electrode **590** may have a thickness appropriate for a p-MOS or n-MOS device, such as when apparatus **500** is an n-MOS device. Gate electrode **590** may have a work function for responding to a gate electrode of an n-MOS device (e.g., where apparatus **500** is an n-MOS device).

FIG. **5** shows junction region **570**, such as a recess formed a surface of substrate **505** adjacent to gate electrode **590** and source-drain recess below a bottom surface of gate dielectric **544**. Similarly, FIG. **5** shows junction region **580**, such a recess formed in a surface of substrate **505** adjacent to gate electrode **590**, and source-drain recess below a bottom surface of gate dielectric **544**.

Portions of well **524** and substrate **505** of FIG. **5** may be removed to form recesses such as junction regions **570** and **580** in substrate **505** adjacent to gate electrode **590**. For example, junctions adjacent to gate electrode **590** may be formed by forming or depositing a junction material into junction regions **570** and **580**. Such removal may include "source-drain recess" etching as described above with respect to forming junction regions **270** and **280** of FIG. **2**, so that junction regions **570** and **680** extend under gate dielectric **544**.

Junction region **570** defines substrate surface **522** (e.g., a base surface of junction region **570**), facet **520**, and tip region **576**. Tip region **576** is between facet **520** and the bottom surface of gate dielectric **544**. Similarly, junction region **580** defines substrate surface **532**, facet **530**, and tip

region **586**. Tip region **586** is between facet **530** and the bottom surface of gate dielectric **544**.

According to embodiments, tip regions **576** and **586** may extend under spacer **512**, spacer **514**, and/or gate electrode **590**. For example, tip regions **576** and **586** may extend along top surface **525** under the bottom surface of gate dielectric **544** from a width equal to width W**52** to a width of less than width W**52**, such as a width of greater than zero. Thus, facets **520** and **530** may contact the bottom surface of gate dielectric **544** adjacent to top surface **525** of substrate **505** to form a channel under top surface **525** between facets **520** and **530** (e.g., a channel of a transistor formed in apparatus **500**), where facets **520** and **530** may each extend under gate dielectric **544** by a distance of between zero and one-half of width W**52**. Thus, portions of substrate **505** may be removed to form facets **520** and **530** contacting and extending under the bottom surface of gate dielectric **544** to contact the bottom surface of gate dielectric **544** under spacer **512**, spacer **514**, and/or gate electrode **590**.

Junction region **570** and/or **580** may be referred to as "source/drain regions" or "diffusion regions." Also, when an appropriate material is formed, deposited, or grown in junction regions **570** and **580**, the resulting material may be referred to as a "junction," a "source," a "drain," or a "diffusion region."

Suitable chambers for etching junction regions **570** and **580** include those mentioned above with respect to forming gate dielectric **144**. Specifically, suitable chambers for etching junction regions **570** and/or **580** include a CVD chamber, an ALD chamber, a UHVCVD chamber, an RTCVD chamber, an RPCVD chamber, an MBE chamber, a "batch" UHV CVD chamber, a cold-wall UHV CVD chamber, an atmospheric pressure (AP) CVD chamber a low-pressure (LP) CVD chamber, an etch chamber, a high-purity high-flow hydrogen (H_2) purge reactor, a chlorine (Cl_2) etch chamber, a trisilane deposition reactor, a disilane deposition reactor, or a chamber reactor that combines the functionality of one or more of these chambers or reactors.

Consequently, in FIG. **5**, junction regions **570** and **580** may or may not correspond to junction regions **270** and **280**, surfaces **522** and **532** may or may not correspond to surfaces **222** and **232**, facets **520** and **530** may or may not correspond to facets **220** and **230**, and tip regions **576** and **586** may or may not correspond to tip regions **276** and **286** of FIG. **2**, as described above. Specifically, in FIG. **5**, junction regions **570** and **580** may or may not be formed by chlorine etching or other etching as described above with respect to junction regions **270** and **280**. Likewise, deposition of material into junction regions **570** and **580** of FIG. **5** may or may not occur in the same chamber as the chamber in which junction regions **570** and **580** were formed or etched. Next, facets **520** and **530** of FIG. **5** may or may not form an angle with respect to surfaces **522** and **532** similar to angle A**1** and angle A**2** as described with respect to FIG. **2**.

FIG. **6** is the schematic substrate of FIG. **5** after forming a thickness of a crystalline material in the junction regions and a thickness of amorphous material on the gate electrode. FIG. **6** shows apparatus **600** having conformal thickness **610** of amorphous material formed over etch mask **542**, spacers **512** and **514**, gate electrode **590**, and gate dielectric **544**. Herein, etch mask **542**, spacers **512** and **514**, gate electrode **590**, and gate dielectric **544** may be referred to as a "gate structure" (e.g., the gate structure of apparatus **500**). Conformal thickness **610** is shown having thickness T**610** above etch mask **542**, thickness T**612** beside spacer **512** and thickness T**613** besides spacer **514**.

FIG. **6** also shows epitaxial thickness **620** of a crystalline material in junction region **570** and having thickness T**620**. Likewise, epitaxial thickness **630** is formed in junction region **580** and has thickness T**630**. According to embodiments, thickness **610** (e.g., such as an amorphous layer) and epitaxial thickness **620** and **630** may be formed "simultaneously," such as by deposition of those materials on apparatus **500** during the same period of time, by blanket deposition, and/or by non-selective deposition to form thickness **610**, **620**, and **630** of apparatus **600**. Moreover, during simultaneous formation, the rate of forming conformal thickness **610** may be faster than the rate of forming epitaxial thicknesses **620** and **630**

For example, conformal thickness **610** and epitaxial thicknesses **620** and **630** may be formed by non-selective or "blanket" chemical vapor deposition (CVD) of the crystalline and amorphous materials. It is contemplated that epitaxial thickness **620** and **630** may be a silicon alloy or a silicon element material having a lattice spacing different than the lattice spacing of substrate **505**. In some embodiments, thicknesses **620** and **630** may be an epitaxial thickness of crystalline phosphorous and/or a silicon-carbon alloy material having a size, thickness, and lattice spacing to cause a tensile strain in substrate **505**. It is also contemplated that thicknesses **620** and **630** may be doped with phosphorous, arsenic, and/or antimony during or after formation, such as to form a N-type material having an electrically negative charge. Thus, thickness **620** and thickness **630** may cause a tensile strain in a channel of apparatus **600**, such as a region of substrate **505** below top surface **525** and between junction regions **578** and **580**.

Conformal thickness **610** may be an amorphous material of the same silicon alloy or silicon element material used to form thickness **620** and **630**. Specifically, instead of being a epitaxial thickness, conformal thickness **610** may be a conformal thickness of the same material that forms thickness **620** and **630**. As such, conformal thickness **610** may be an amorphous layer with no definite arrangement of atoms in contrast to the very regular arrangement of atoms and crystalline material of thickness **620** and **630**. Also, conformal thickness **610** may have a lattice spacing that is different than that of the material etch mask **542**, spacers **512** and **514**, gate electrode **590**, and/or gate dielectric **544** (e.g., the gate structure of apparatus **500**). Thus, conformal thickness **610** may cause a tensile strain in gate electrode **590** and/or other components of the gate structure of apparatus **500**.

For example, thickness **610**, **620**, and **630** may be formed (e.g., in the case where apparatus **600** is or will become a n-MOS transistor or device) of a silicon-carbon alloy film blanket or non-selective deposited over the active area of a transistor (e.g., deposited over apparatus **500**). The deposition may be a chemical vapor deposition (CVD) using trisilane, methylsilane, and hydrogen (e.g., a H_2 carrier gas) had a deposition temperature of less than **550** ° C. (e.g., at a temperature of 450, 500 or 550° C.). In such a setting, epitaxial thickness **620** and **630** are rendered epitaxial on the exposed silicon or surface of junction regions **570** and **580**. Specifically, an epitaxial layer is formed on surface **522**, facet **520**, surface **532**, and facet **530**. Alternatively, in such a setting, an amorphous thickness is formed on the dielectric, oxide, or nitride of etch mask **542**, spacers **512** and **514**, gate electrode **590**, and gate dielectric **544** (e.g., the gate structure of apparatus **500**). The epitaxial crystalline material formed as thickness **620** and **630** may be in-situ doped with phosphorous or arsenic during or after deposition to form N-type electrically negatively charged material.

According to embodiments, thickness **610**, **620**, and **630** may be formed by introducing trisilane at between 25 milligrams per minute (mg/min) and 200 mg/min, and introducing monomethyl silane at between 15 standard cubic centimeters (SCCM) and 45 SCCM, and introducing PH_3 (e.g., by introducing 1 percent PH_3 in a hydrogen (H_2) carrier gas) at between 400 SCCM and 800 SCCM. In another example, forming thicknesses **610**, **620**, and **630** may include introducing between 50 and 100 mg/min of trisilane, 30 SCCM of monomethylsilane, and 600 SCCM of PH_3.

In one embodiment, in a single wafer 300 mm RT CVD reactor, a chemistry of 20 SCCM of trisilane, 30 SCCM of mono-methyl silane, 20 SLM of H_2, at 550° C., and 15 Torr pressure for 12 minutes produces a 500 nano-meter silicon-carbon alloy film with a fully substituted carbon concentration of 3E20 cm cubed as epitaxial thickness **620** and **630**. Conformal thickness **610** of an amorphous material is formed in regions not in contact with the surfaces of junction regions **570** and **580** (e.g., regions not in contact with surface **522** and **532** or facet **520** and **530**). Thus, conformal thickness **610** may be formed on etch mask **542**, spacers **512** and **514**, gate electrode **590**, and/or gate dielectric **544**. One reason for the formation of the crystalline material on surfaces **522** and **532** and facets **520** and **530** is that, on these surfaces, the silicon continues to grow by epitaxially expanding the existing lattice. However, since there is no existing silicon lattice to support growth on surfaces of etch mask **542**, spacers **512** and **514**, gate electrode **590**, and gate dielectric **544**, material formed there is of an amorphous nature.

In some embodiments, epitaxial thickness **620** and **630** may be or include a silicon material having a substitutional-carbon concentration of between 0.13 percent and 2.0 percent. Also, in some embodiments, epitaxial thickness **620** and **630** may be or include a silicon material having a phosphorous concentration of between 5E13 atoms per centimeter cubed (atoms/cm) and 5E20 atoms/CM^3. For example, epitaxial thickness **620** and **630** may be a silicon alloy or silicon elemental material having a substitutional-carbon concentration of between 0.13 percent and 2.0 percent, and having a phosphorous concentration of between 5E13 atoms per centimeter cubed (atoms/cm) and 5E20 atoms/CM^3.

Often, when blanket or non-selective deposition over the active area of a transistor (e.g., deposition over apparatus **500**) is continued thickness **610**, **620**, and **630** may be formed such that thickness **610** expands into the tip regions and/or onto the bottom surface of the gate electrode before thickness **620** and **630** expand to those locations. Specifically, if the deposition process described above with respect to FIG. **6** is continued, it is possible that thickness T**612** and T**613** will continue to grow and that amorphous material of thickness **610** will expand into tip regions **576** and **586** (see FIG. **5**) and or onto bottom surface B**1** or bottom surface B**2** of gate dielectric **544** (see FIG. **7**). Having amorphous material of thickness **610** in the tip regions and/or on the bottom surface of the gate electrode inhibits performance of the transistor. Moreover, after thickness **620** and **630** have been formed to a height above surface **525**, etching away or removal of amorphous material of thickness **610** in the tip regions and/or on the bottom surface of the gate electrode leaves a device that does not function properly.

However, according to embodiments, epitaxial thickness **610**, **620** and **630** may be etched back prior to further deposition of material to expand thickness **610**, **620** and **630**. For instance, FIG. **7** shows the substrate of FIG. **5** after removing a thickness of the crystalline material and a thickness of the amorphous material. FIG. **7** shows apparatus **700**, such as an apparatus corresponding to apparatus **600** after a thickness of conformal thickness **610** and epitaxial thickness **620** and **630** are removed. For example, the amorphous material of conformal thickness **610** and the crystalline material of epitaxial thickness **620** and **630** may be removed simultaneously during a process, such as an etch process to form conformal thickness **710** and epitaxial thickness **720** and **730**, as shown in FIG. **7**. Conformal thickness **710** as thickness T**710** above etch mask **542**, thickness T**712** adjacent to spacer **512**, and thickness T**713** adjacent to spacer **514**. Also, epitaxial thickness **720** has thickness T**720**, and epitaxial thickness **730** has thickness T**730**. According to embodiments a rate of removing or etching epitaxial thickness **720** and **730** may be slower than a rate of removing or etching conformal thickness **710**. For example, an etch chemistry may be selected that etches the crystalline material of thickness **720** and **730** slower than it etches the amorphous material of thickness **710**. Thus, removal of thicknesses **710**, **720** and **730** may continue until a remaining vertical thickness of thickness **710** is less than a remaining thickness of thickness **720** and **730**. Specifically, thickness T**710** may be less than thickness T**720** or thickness T**730**. However, it is also contemplated that thickness T**710** may be equal to or greater than thickness T**720** and/or thickness T**730**.

Moreover, according to embodiments, forming thickness **710** may include removing a thickness of thickness **610** sufficiently so that a subsequent forming or deposition of conformal material over thickness **710** does not extend onto or below bottom surface B**1** or bottom surface B**2** of gate dielectric **544**. For example, thickness T**712** and thickness T**713** may be sufficiently thin so that subsequent deposition of conformal thickness or amorphous material onto thickness **710** does not extend below or onto bottom surfaces B**1** and B**2**.

Thickness T**720** and/or thickness T**730** may be a thickness of crystalline material between 0.5 nano-meters (nm) and 2 nm, such as 0.8, 0.9, 0.95, 1.0, 1.05, 1.1, 1.15, 1.2, 1.3, or 1.4 nm. Specifically, the net affect of forming thickness **610**, **620**, and **630**, and removing thicknesses thereof to form thickness **710**, **720** and **730** may define a formation rate of approximately 1.05 angstroms per second (e.g., 10 nm per minute) for epitaxial thickness **720** and **730**. A similar net effect may occur or the thickness **710** in the lateral direction, and may be a little higher in the vertical direction (e.g., in the direction of thickness T**710**).

Furthermore, in embodiments, removal of thicknesses of thickness **610**, **620**, and **630** may occur at a rate, for a duration, or with an etchant such that thickness T**712** and T**713** is less than thickness T**720** or thickness T**730**.

For example, removal of thicknesses of thickness **610**, **620**, and **630** may include etching with hydrochloric acid, chlorine, or other appropriate etchants or gases. Specifically, such etching may include etching with a hydrochloric acid gas a flow rate of between 100 SCCM and 200 SCCM, such as at a flow rate of 140, 145, 150, 155, or 160 SCCM. It is also contemplated that a dry resist etch, chlorine etch, CF_4, plasma, sputter, and/or other etch chemistry or gas capable of removing thicknesses of thickness **610**, **620**, and **630** may be used.

Moreover, according to embodiments, forming of thickness **610**, **620**, and **630**, and removal of thicknesses thereof to form thickness **710**, **720**, and **730** may occur in the same chamber for reactor without breaking a seal, vacuum, pres-

sure, ambiance, of the chamber or reactor, and/or without exposing the inside of the chamber or reactor to the outside atmosphere or air. Thus, removal of thickness of material to form thickness **710**, **720**, and **730** may be performed in-situ with forming of thickness **610**, **620**, and **630**. Specifically, the simultaneous forming and removal of the thicknesses may occur at the same pressure, at the same temperature, in the same ambiance, in the same atmosphere, and/or during the same seal or vacuum of a chamber or reactor. For instance, some suitable chambers for forming of thickness **610**, **620**, and **630**, and removal of thicknesses thereof to form thickness **710**, **720**, and **730** in the same chamber include a CVD chamber, an ALD chamber, a UHVCVD chamber, an RTCVD chamber, an RPCVD chamber, an MBE chamber, a "batch" UHV CVD chamber, a cold-wall UHV CVD chamber, an atmospheric pressure (AP) CVD chamber a low-pressure (LP) CVD chamber, an etch chamber, a high-purity high-flow hydrogen (H_2) purge reactor, a chlorine (Cl_2) etch chamber, a trisilane deposition reactor, a disilane deposition reactor, or a chamber reactor that combines the functionality of one or more of these chambers or reactors. Further, appropriate chambers include chambers for performing deposition of epitaxial thicknesses of silicon, silicon alloy, and/or silicon elemental materials; chambers for deposition of conformal thickness of amorphous material; chambers for deposition of crystalline material, chambers for forming blanket or non-selective deposition; chambers for forming selective deposition, chambers for depositing doped material, chambers for depositing silicon germanium (SiGe) and/or chambers for depositing silicon-carbon alloy ($Si_{1-x}C_x$) material.

In some embodiments, forming thickness **610**, **620**, and **630** and removing thicknesses thereof may occur in the same CVD chamber, at a temperature of between 500 and 750° C. (e.g., at a temperature of 500, 550, 600, 650, 700, or 750° C.), and at a pressure of between 12 and 18 Torr (e.g., at a pressure of 12, 13, 14, 15, 16, 17, or 18 Torr). Also, forming thickness **610**, **620**, and **630** and removing thicknesses thereof may occur in the same CVD chamber at a pressure of between 1E-4 and 1000 Torr (e.g., at a pressures within a one decimal range of 1E-3, 1E-2, 0.1, 1.0, 10, 100, or 1000 Torr). In some cases, forming thickness **610**, **620**, and **630** and removing thicknesses thereof may occur in the same CVD chamber at a pressure of between 3E-3 Torr and 7E-3 Torr (e.g., 3E-3, 3.5E-3, 4E-3, 4.5E-3, 5E-3, 5.5E-3, 6E-3, 6.5E-3, or 7E-3). Moreover, there may be a hydrogen (H_2) ambient flow of between ten standard liters per minute (SLM) and 30 SLM during the forming and removing.

In some embodiments, forming, depositing, or growing thickness **610**, **620**, and **630**; and then removing, or etching a thickness of thickness **610**, **620**, and **630** as described above with respect to FIGS. **6** and **7** may describe one iteration or deposition/removal sequence of a multiple iteration process. Thus, the iteration or deposition/removal sequence of FIGS. **6** and **7** may be repeated.

For example, FIG. **8** shows the substrate of FIG. **7** after forming a subsequent thickness of a crystalline material in the junction regions and a subsequent thickness of the amorphous material on the gate electrode. FIG. **8** shows apparatus **800**, such as apparatus **700** after reforming or redepositing additional conformal thickness of amorphous material on thickness **710** to form thickness **810**, redepositing or depositing additional epitaxial thickness of crystalline material on thickness **720** to form thickness **820**, and redepositing or depositing additional epitaxial thickness of crystalline material on thickness **730** to form epitaxial thickness **830**. Thus, thickness T**810** of conformal thickness **810** may be thicker than thickness T**610** or T**710**. Similarly, thickness T**812** may be thicker than thickness T**712** or T**612**. Likewise, thickness T**813** may be thicker than T**713** or T**613**.

Similarly, thickness T**820** of epitaxial thickness **820** may be thicker than thickness T**720** or T**620**. Likewise, thickness T**830** of epitaxial thickness **830** may be thicker than thickness T**730** or T**630**.

It is contemplated that conformal thickness **810** may include material, be formed by a process, have a functionality, and cause strains as described above with respect to conformal thickness **610**. Similarly, epitaxial thickness **820** and **830** may correspond to material, be formed by processes, cause strains, and have functionality as described above with respect to epitaxial thickness **620** and **630**.

Subsequent to forming apparatus **800**, thicknesses of thickness **810**, **820**, and **830** may be removed, such as by etching. For example, FIG. **9** shows the substrate of FIG. **8** after removing a thickness of the crystalline material and the amorphous material. FIG. **9** shows apparatus **900**, such as apparatus **800** after removing thicknesses of thickness **810**, **820**, and **830** to form conformal thickness **910** of amorphous material, epitaxial thickness **920** of crystalline material, and epitaxial thickness **930** of crystalline material. Thus, materials, processes, functionality, and strains of thickness **910**, **920**, and **930** may correspond to those described above with respect to thickness **710**, **720**, and **730**. It can also be appreciated that the relationship between thickness **910**, **920**, and **930**, as compared to thickness **810**, **820**, and **830** may correspond to the relationship between thickness **710**, **720**, and **730** as compared to thickness **610**, **620**, and **630**. Specifically, processes for forming apparatus **800** from apparatus **700** and subsequently forming apparatus **900** from apparatus **800** may correspond to those described above for forming apparatus **600** from apparatus **500** and subsequently forming apparatus **700** from apparatus **600**.

Moreover, according to embodiments, processes for forming apparatus **600**, **700**, **800**, and **900** may occur in the same chamber, such as without breaking a seal or vacuum of a chamber, and/or under other settings or conditions as described above with respect to forming apparatus **700** from apparatus **600**. Thus, formation of apparatus **600** and **700** may be defined as a first iteration, and forming apparatus **800** and **900** may be defined as a second iteration in a process for deposit/removal iterations. Such iterations may be continued until a desired or selected thickness of an epitaxial crystalline material is formed in the junction regions of the transistor device. Also, such iterations may be continued until a desired or selected thickness of a conformal amorphous material over the gate structure of a transistor device. In some cases, such iterations may be repeated between five and ten times, such as by being repeated five times, six times, seven times, eight times, nine times, or ten times.

It is also contemplated that such iterations may terminate with a deposition or a removal process (e.g., a process corresponding to forming apparatus **600** or apparatus **700**). Likewise the deposition or removal portions of the iteration may occur over a period of between five seconds and five minutes, such as where each deposition and/or removal process occurs over a period of ten seconds, 20 seconds, 25 seconds, 30 seconds, 35 seconds, 40 seconds, 45 seconds, 50 seconds, 60 seconds, or 90 seconds.

In one example, forming of thickness **610**, **620**, and **630** may be performed in-situ with removal of thicknesses of material to form thickness **710**, **720**, and **730** in CVD chamber. First, thickness **610**, **620**, and **630** are formed or deposited by introducing trisilane at between 50 mg/min and

100 mg/min, introducing monomethyl silane at 30 SCCM, and introducing PH_3 (e.g., one percent PH_3 in a H_2) at 600 SCCM for 30 seconds while of H_2 is introduced into the chamber at a flow of 20 SLM, the chamber is kept at a temperature of between 600 and 650 degrees Celsius, and the chamber is at a pressure of 15 Torr.

Next, thickness **710**, **720**, and **730** are formed "immediately" after deposition of thickness **610**, **620**, and **630** (e.g., no other processing is performed between pumping out the deposition gases used to form thickness **610**, **620**, and **630** and etching thickness **610**, **620**, and **630** to from thickness **710**, **720**, and **730**). For instance, thickness **710**, **720**, and **730** are formed by etching thickness **610**, **620**, and **630** by introducing HCl at 150 SCCM into the chamber for 30 seconds while of H_2 is introduced into the chamber at a flow of 20 SLM, the chamber is kept at a temperature of between 600 and 650 degrees Celsius, and the chamber is at a pressure of 15 Torr.

The sequence of introducing trisilane, monomethyl silane, and PH_3, pumping out, and then introducing HCl is repeated 7 times to form about 1.05 angstroms/sec in thickness (deposition minus etch) for crystalline material of thickness **720**, and **730**. The thickness of thickness **710** of amorphous material is about the same in the lateral direction (e.g., thickness T**712** and T**714**), but is a little more in the vertical direction (e.g., thickness T**710**). Moreover, it can be appreciated that the seal or vacuum of the chamber can be kept in tact during the 7 iterations. Similarly, the conditions where H_2 is introduced into the chamber at a flow of 20 SLM, the chamber is kept at a temperature of between 600 and 650 degrees Celsius, and the chamber is at a pressure of 15 Torr may be maintained during the 7 iterations.

Thus, it is possible to repeat iterations of forming and removal of the conformal and epitaxial thicknesses until a top surface of the epitaxial thicknesses is superior to top surface **525**, and/or until the epitaxial thicknesses cause a selected strain in substrate **505**. For example, FIG. **10** shows the substrate of FIG. **9** after forming a thickness of crystalline material in the junction regions to form junctions, and after forming a thickness of amorphous material on the gate electrode. FIG. **10** shows apparatus **1000** having conformal thickness **1010** of amorphous material over the gate structure and epitaxial thickness **1020** and **1030** in junction regions **570** and **580**. Thickness **1020** has top surface **1022** superior to top surface **525**, and thickness **1030** has top surface **1032** superior to top surface **525**. FIG. **10** also shows thickness **1020** having thickness T**1020**, and thickness **1030** having thickness T**1030**.

It can be appreciated that conformal thickness **1010** may be formed of a material by processes, have a functionality and cause strains as described above with respect to conformal thickness **610**. Similarly, epitaxial thicknesses **1020** and **1030** may be formed of a material, by a process, have a functionality, and/or cause strains as described above with respect to epitaxial thickness **620** and **630**. For example, thickness **1020** and **1030** may be a sufficient thickness or size of a crystalline material having a lattice spacing different than the lattice spacing of new material of substrate **505** to cause a strain in substrate **505**, such as a strain in the channel of apparatus **1000** (e.g., where the channel may be defined as the portion of substrate **505** below top surface **525** and between thicknesses **1020** and **1030**). Moreover, thickness **1020** and **1030** may be epitaxial thicknesses of crystalline phosphorous and/or silicon-carbon alloy material, sufficient to cause a tensile strain in substrate **505**.

Specifically, as shown in FIG. **10**, thickness **1020** may cause tensile strain **1074** away from a portion of substrate **505** under top surface **525**, and thickness **1030** may cause tensile strain **1084** away from the same portion of substrate **505**. Thus, strain **1074** may cause tensile strain **1092**, and strain **1084** may cause tensile strain **1094** in a channel of substrate **505** between thickness **1020** and **1030** (e.g., a tensile strain in the channel of apparatus **1000**, or apparatus **1000** is a n-MOS device). According to embodiments, tensile strains **1092** and **1094** may be sufficient strains to increase carrier mobility (e.g., mobility of electrons in the channel of well **524**) between thickness **1020** and **1030**. In other words, a channel in substrate **505** may be under a tensile strain caused by the lattice spacing of a phosphorous and/or silicon-carbon alloy material in thickness **1020** and **1030** being larger than the lattice spacing of the substrate material.

Also, as described above, with respect to conformal thickness **610**, conformal thickness **1010** may cause a tensile strain in the gate structure of apparatus **1000**, such as a tensile strain in gate electrode **590**.

FIG. **10** also shows epitaxial thickness **1020** filling tip region **576**, and epitaxial thickness **1030** filling tip region **586**. For example, thickness **1020** may be in contact with and/or atomically bonded to bottom B**1** and facet **520**. Similarly, thickness **1030** may be attached to and/or atomically bonded bottom B**2** and/or facet **530**.

It is also considered that thickness **1020** and thickness **1030** may be doped during or after formation with phosphorous, arsenic, and/or antimony to form an N-type material having an electrically negative charge.

For example, once a sufficient or selected thickness of material is deposited or formed as thickness **1020** and **1030** (e.g., after a deposition or etch portion of an iteration) conformal thickness **1010** may be removed. Thus, conformal thickness **1010** of FIG. **10** may be removed from the gate structure of apparatus **1000**, such as by selective wet etch. Moreover, a conformal amorphous thickness (e.g., thicknesses **610**, **710**, **810**, **910** and **1010** described above, may be left on isolation material (e.g., material **510**) as well. These conformal amorphous thicknesses may also be removed, such as by selective wet etch, thus resulting in a tensile strained N-channel transistor which has increased electron mobility and drive current.

For example, FIG. **11** shows the substrate of FIG. **10** after removing the amorphous materials. FIG. **11** shows apparatus **1100**, such as apparatus **1000** after removing or etching conformal thickness **1010** from the gate structure of apparatus **1000**. For example, conformal thickness **1010** may be selectively or non-selectively etched using an etch chemistry that leaves an appropriate thickness of epitaxial material in junction region **570** and **580**, such as thickness **1120** and **1130**. In some embodiments, etching conformal thickness **1010** from the gate structure includes etching a thickness of between five percent and 35 percent of the thickness of thickness **1020** and **1030**. Thus, after etching conformal thickness **1010** from the gate structure thickness **1120** and **1130** may be 75, 80, 75, or 90 percent as thick as thickness **1020** and **1030** as described above for FIG. **10**. Similarly, top surface **1122** and **1132** may correspond to top surface **1022** and **1032** as described above for FIG. **10**. Furthermore, thickness T**1120** and T**1130** may correspond to thickness T**1020** and thickness T**1030** as described above for FIG. **10**.

After removal of thickness **1010**, the remaining transistor (e.g., apparatus **1100**) may have strains **1174**, **1184**, **1192**, and **1194** which may correspond to or be greater in magnitude than strains **1074**, **1084**, **1092**, and **1094** of FIG. **10**. It is also appreciated that strains **1174**, **1184**, **1192**, and **1194** may correspond to or have directions similar to strains **1074**,

1084, 1092, and 1094 of FIG. 10. Specifically, strains 1174, 1184, 1192, and 1194 may correspond to or be within thirty percent in magnitude and ten degrees direction of strains 1074, 1084, 1092, and 1094 of FIG. 10.

Thus, strains 1174, 1184, 1192, and 1194 may cause a sufficient tensile strain in the channel of apparatus 1100 to increase electron mobility and drive current. Moreover, strain 1192 and 1194 may be uniaxial tensile strain caused by increased phosphorous and substitutional-carbon concentration in epitaxial thickness 1120 and 1130. Also, increased phosphorous doping in epitaxial thickness 1120 and 1130 may be greater than the 2E20 cm cubed. Specifically, apparatus 1100 may be a n-MOS transistor with a sufficient increased phosphorous and substitutional-carbon concentration in epitaxial thickness 1120 and 1130 to increase carrier mobility and reduce $R_{External}$. Overall, a transistor similar to apparatus 1100 may have improved saturation current and improved device speed due to the gain in carrier mobility and due to decreased sheet resistant in epitaxial thickness 1120 and 1130.

Thus, apparatus 1100 may be an n-MOS device of a CMOS device. For example, FIG. 12 shows a representative CMOS structure. FIG. 12 shows CMOS device 1200 having n-MOS device 1202, such as an embodiment of apparatus 1100 as described above with respect to FIG. 11, connected to p-MOS device 1204 in typical fashion. Substrate 505 includes P-type well 524 related to N-type well 1224 for forming CMOS device 1200, such that N-type well 1224 is part of p-MOS transistor device 1204 formed on a second area of substrate 505 and defining a second different interface surface 1225 of substrate 505 adjacent to P-type well 524. Specifically, for instance, p-MOS device 1204 may be formed adjacent to n-MOS device 1202 by having p-MOS device 1204 electrically isolated from n-MOS device 1202 by electrically insulating material 510 as described herein. Moreover, p-MOS device 1204 may include a channel below gate dielectric 1244 which is below gate electrode 1290, and between P-type junctions 1220 and 1230. p-MOS device 1204 is also shown with spacers 1212 and 1214.

FIG. 12 also shows compressive strains 1274, 1284, 1292, and 1294 and p-MOS device 1204. For example, junctions 1220 and 1230 may cause compressive strains 1274 and 1284 towards a portion of substrate 505 under top surface 1225. Thus, strains 1274 and 1284 may cause compressive strains 1292 and 1294 in a channel of p-MOS device 1204. It can be appreciated that compressive strains 1292 and 1294 may be sufficient to increase carrier mobility (e.g., mobility of holes in the channel of well 1224) between junctions 1220 and 1230. Specifically, junctions 1220 and 1230 may be formed of a material having a lattice spacing larger than a lattice spacing of substrate 505 (e.g., by being formed of SiGe, which may or may not be doped with boron and/or aluminum to form a P-type electrically positive charged material). Finally, CMOS device 1200 has ground GND, input voltage V_{in}, output voltage V_{out}, and bias voltage V_{DD}.

In the foregoing specification, specific embodiments are described. However, various modifications and changes may be made thereto without departing from the broader spirit and scope of embodiments as set forth in the claims. The specification and drawings are, accordingly, to be regarded in an illustrative rather than a restrictive sense.

What is claimed is:

1. A method comprising:

simultaneously forming a first epitaxial thickness of a crystalline material in a first junction region in a substrate, a second epitaxial thickness of a crystalline material in a different second junction region in the substrate, the first and second junction regions adjacent a gate electrode, and a conformal thickness of an amorphous material over the gate electrode, wherein a rate of forming the conformal thickness of an amorphous material is faster than a rate of forming the first and second epitaxial thickness of crystalline material; then

simultaneously removing a thickness of the amorphous material and a thickness of the crystalline material.

2. The method of claim 1, wherein a rate of removing the thickness of crystalline material is slower than a rate of removing the thickness of an amorphous material.

3. The method of claim 1, wherein simultaneously removing comprises removing a thickness of the amorphous material until a remaining horizontal thickness of the amorphous material is thinner than a remaining vertical thickness of the crystalline material.

4. The method of claim 1, wherein simultaneously removing comprises removing a thickness of the amorphous material until a remaining vertical thickness of the amorphous material is thinner than a remaining vertical thickness of the crystalline material.

5. The method of claim 4, further comprising removing the remaining thickness of the amorphous material.

6. The method of claim 1, wherein a surface of the substrate defines a top surface of the substrate and further comprising repeating simultaneously forming and simultaneously removing until a surface of the first junction region and a surface of the second junction region are superior to the top surface.

7. The method of claim 1, further comprising repeating simultaneously forming and simultaneously removing between five and 10 times to form a thickness of crystalline material of between 0.8 nano-meters and 1.4 nano-meters.

8. The method of claim 1, wherein simultaneously forming and simultaneously removing occur in one of a chemical vapor deposition (CVD) chamber, an ultra high vacuum (UHV) CVD chamber, a rapid thermal (RT) CVD chanter, a reduced pressure (RP) CVD chamber, and without breaking a seal of the chamber.

9. The method of claim 1, wherein simultaneously forming and simultaneously removing occur in the same chemical vapor deposition chamber, at a temperature of between 500 and 750 degrees Celsius and at a pressure of between 12 and 18 Torr.

10. The method of claim 1, wherein simultaneously removing comprises etching with a hydrochloric acid gas; and wherein simultaneously forming comprises non-selective chemical vapor deposition of the crystalline and amorphous materials by introducing trisilane, introducing monomethyl silane.

11. The method of claim 1, wherein simultaneously forming comprises depositing a sufficient epitaxial thickness of a crystalline material having a lattice spacing different than a lattice spacing of the substrate material to cause a strain in the substrate material.

12. The method of claim 1, wherein simultaneously forming comprises depositing a sufficient epitaxial thickness of a crystalline phosphorous doped silicon-carbon alloy material to cause a tensile strain in the substrate.

13. The method of claim 1, wherein the first and second epitaxial thickness of a crystalline material comprises a silicon material having a substitutional-carbon concentration of between 0.13 percent and 2.0 percent, and a phosphorous

concentration of between 5E13 atoms per centimeter cubed (atoms/cm^3) and 5E20 atoms/cm^3.

14. The method of claim **1**, wherein Simultaneously removing comprises removing the conformal thickness of an amorphous material from a first sidewall surface of the substrate proximate to the first junction region, and from a second sidewall surface of the substrate proximate to the second junction region, and wherein simultaneously forming comprises depositing a sufficient epitaxial thickness of a crystalline phosphorous silicon-carbon alloy material to fill a first tip region superadjacent to the first sidewall surface and a second tip region superadjacertt to the second sidewall surface.

* * * * *