US 20100290191A1

(19) United States

(12) Patent Application Publication

Lin et al.

(10) Pub. No.: US 2010/0290191 A1

(43) Pub. Date: Nov. 18, 2010

(54) SYSTEM-IN PACKAGES

(75) Inventors: **Mou-Shiung Lin**, Hsin-Chu (TW); **Jin-Yuan Lee**, Hsin-Chu (TW)

Correspondence Address:
McDermott Will & Emery LLP
600 13th Street, NW
Washington, DC 20005-3096 (US)

(73) Assignee: **Megica Corporation**, Hsin-Chu (TW)

(21) Appl. No.: **12/779,863**

(22) Filed: **May 13, 2010**

Related U.S. Application Data

(60) Provisional application No. 61/178,493, filed on May 14, 2009.

Publication Classification

(51) **Int. Cl.**
H05K 7/20 (2006.01)
H05K 1/18 (2006.01)

(52) **U.S. Cl.** **361/704**; 361/764; 361/762

(57) **ABSTRACT**

System-in packages, or multichip modules, are described which can include multi-layer chips in a multi-layer polymer structure, on-chip metal bumps on the multi-layer chips, intra-chip metal bumps in the multi-layer polymer structure, and patterned metal layers in the multi-layer polymer structure. The multi-layer chips in the multi-layer polymer structure can be connected to each other or to an external circuit through the on-chip metal bumps, the intra-chip metal bumps and the patterned metal layers. The system-in packages can be connected to external circuits through solder bumps, meal bumps or wirebonded wires.

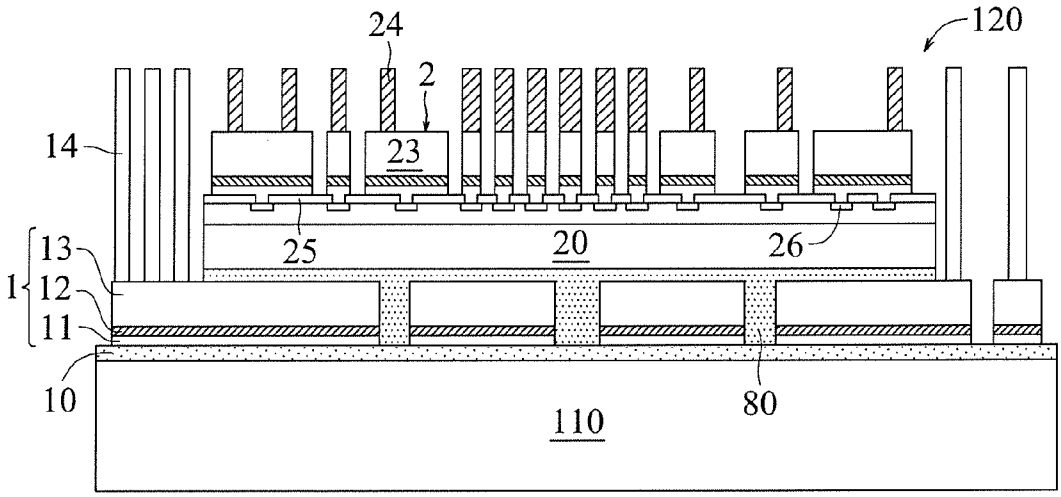

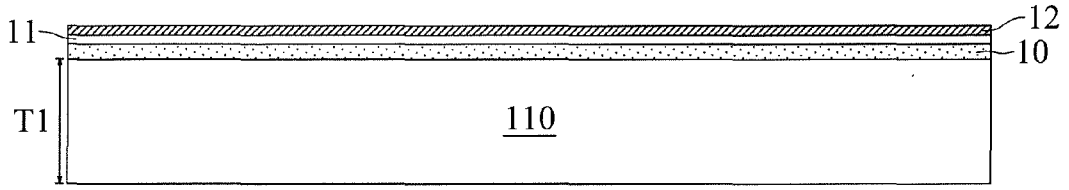

Fig. 1

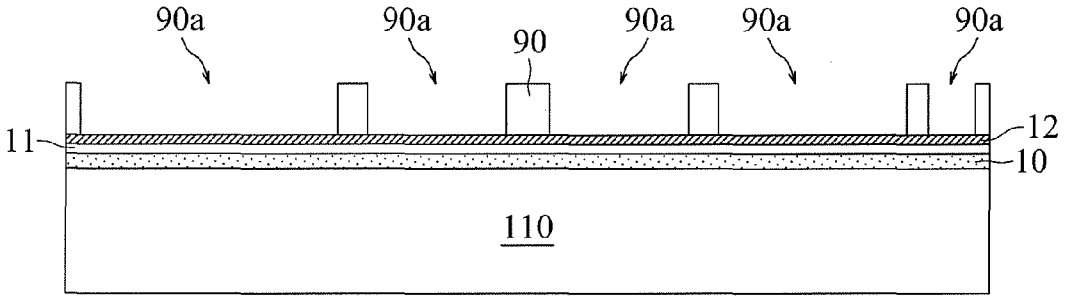

Fig.2

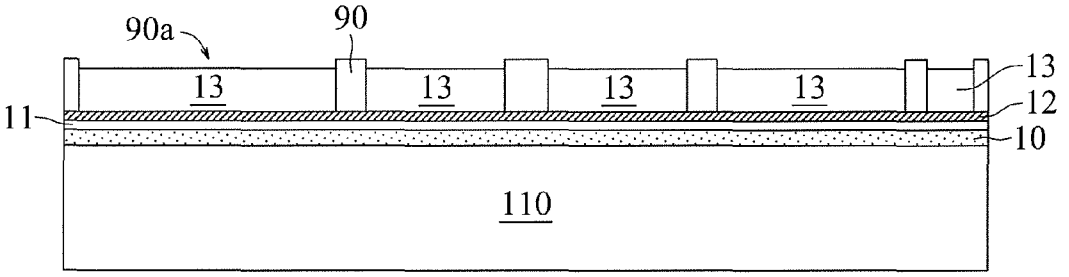

Fig. 3

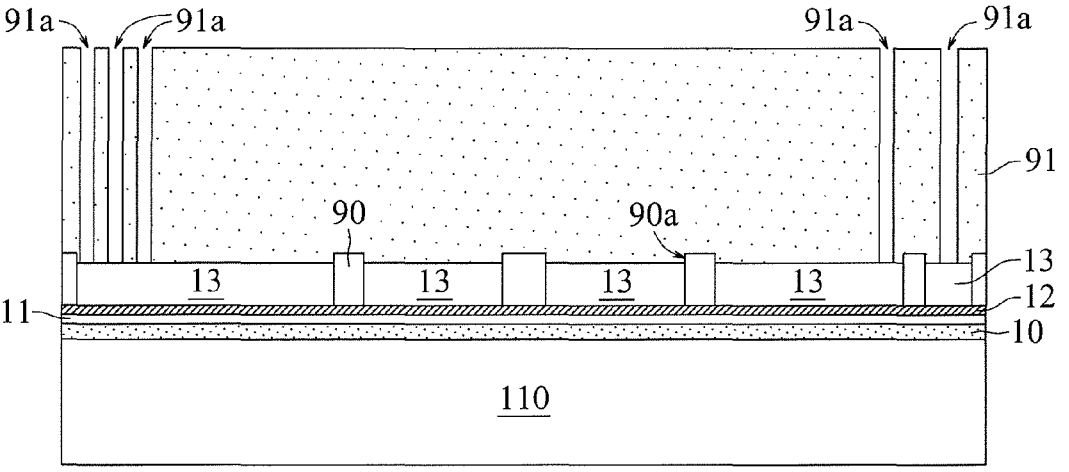

Fig. 4

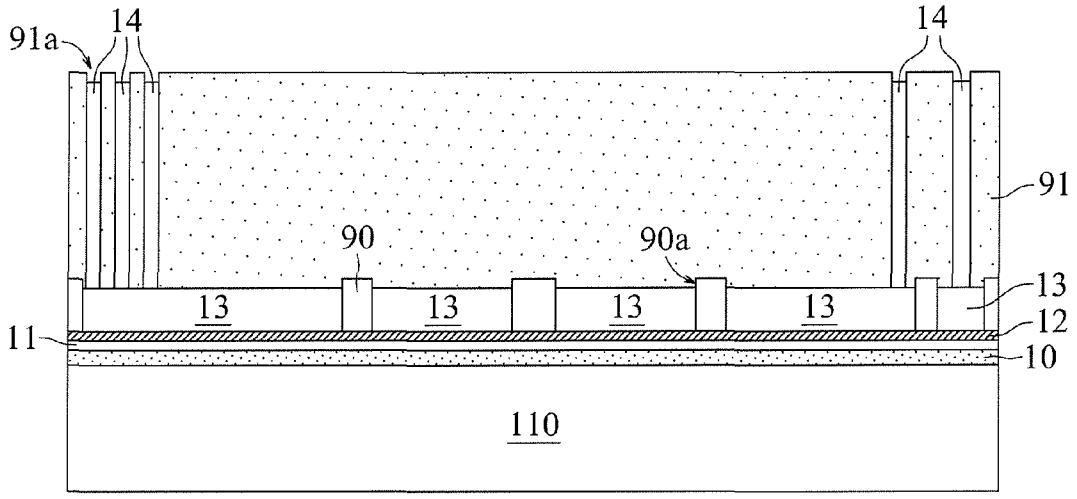
91a
14
14
91
90
90a
13
13
13
13
13
11
12
10
110

Fig. 5

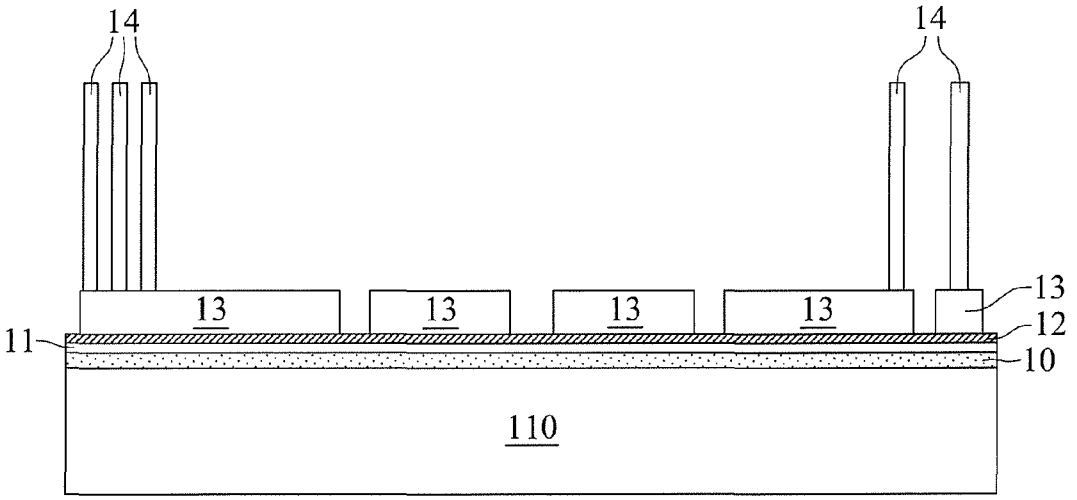
14
14
13
13
13
13
13
11
12
10
110

Fig. 6

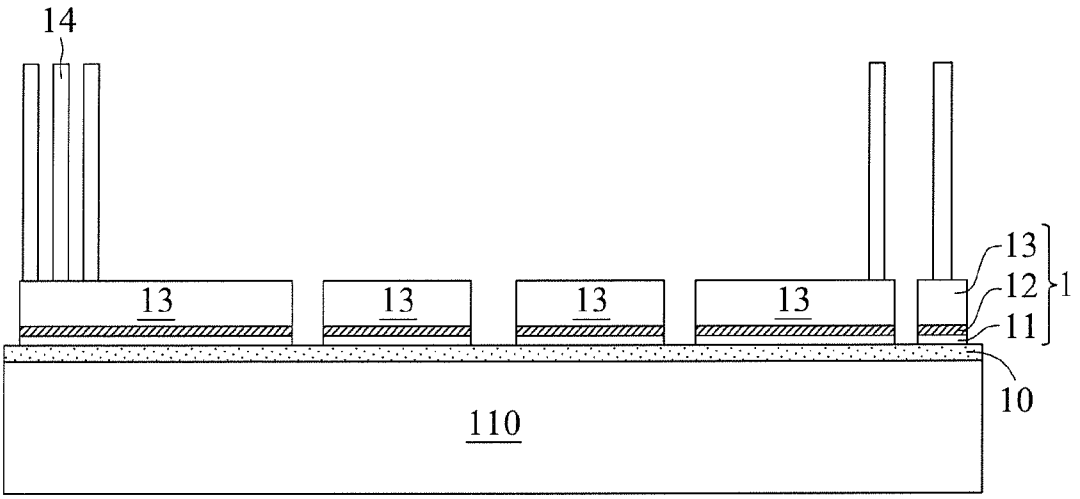
14
13
13
13
13
13
12
11
1
10
110

Fig. 7

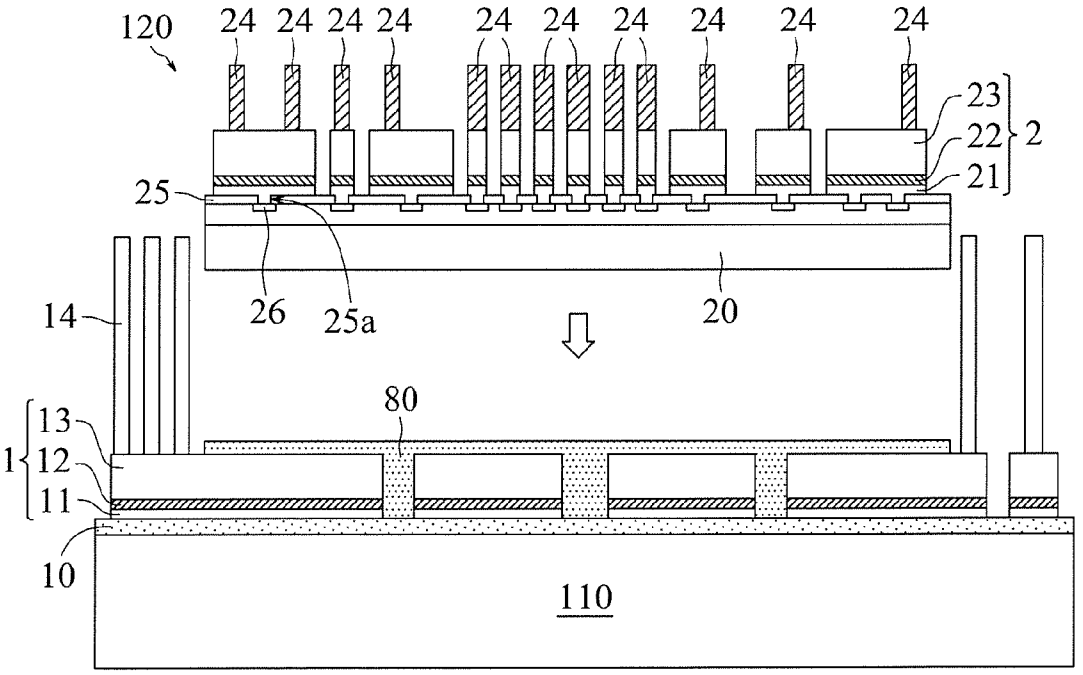
120
24
23
22
21
2
25
26
25a
20
14
80
13
12
11
1
10
110

Fig. 8

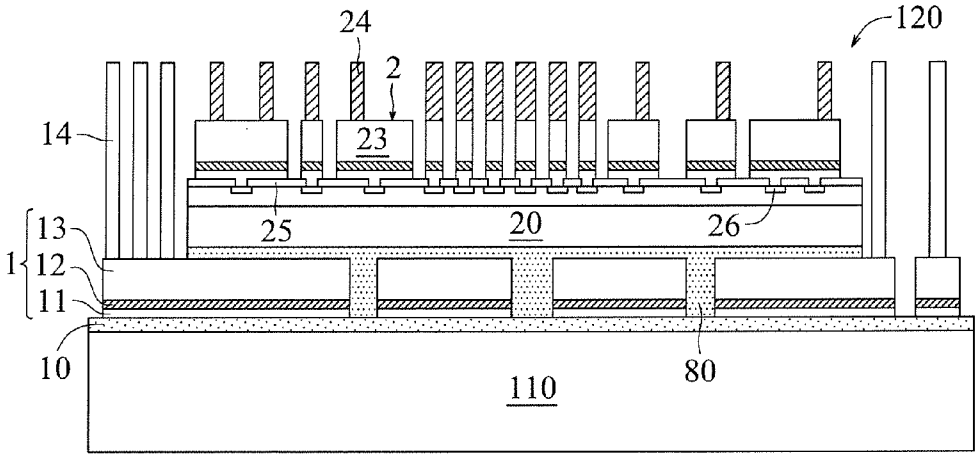
24
2
120
14
23
13
1
12
11
25
20
26
10
80
110

Fig. 9

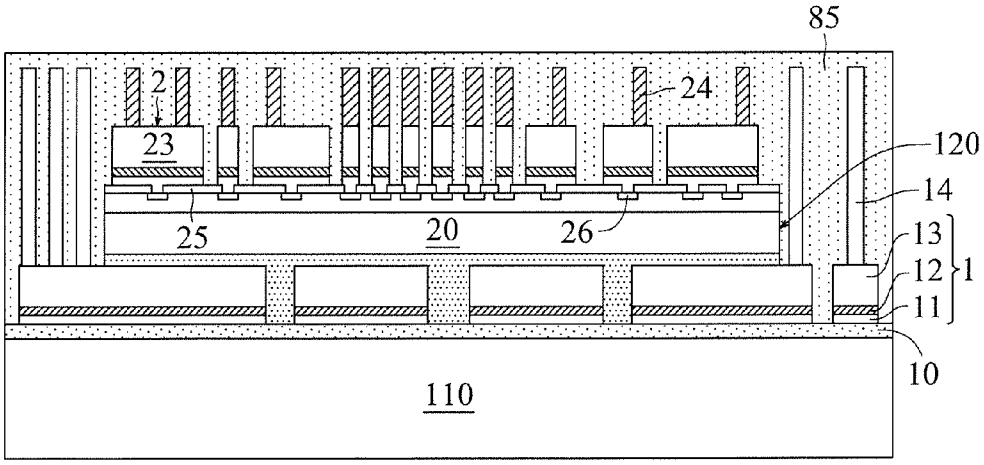
85
2
24
23
120
14
25
20
26
13
12
1
11
10
110

Fig. 11

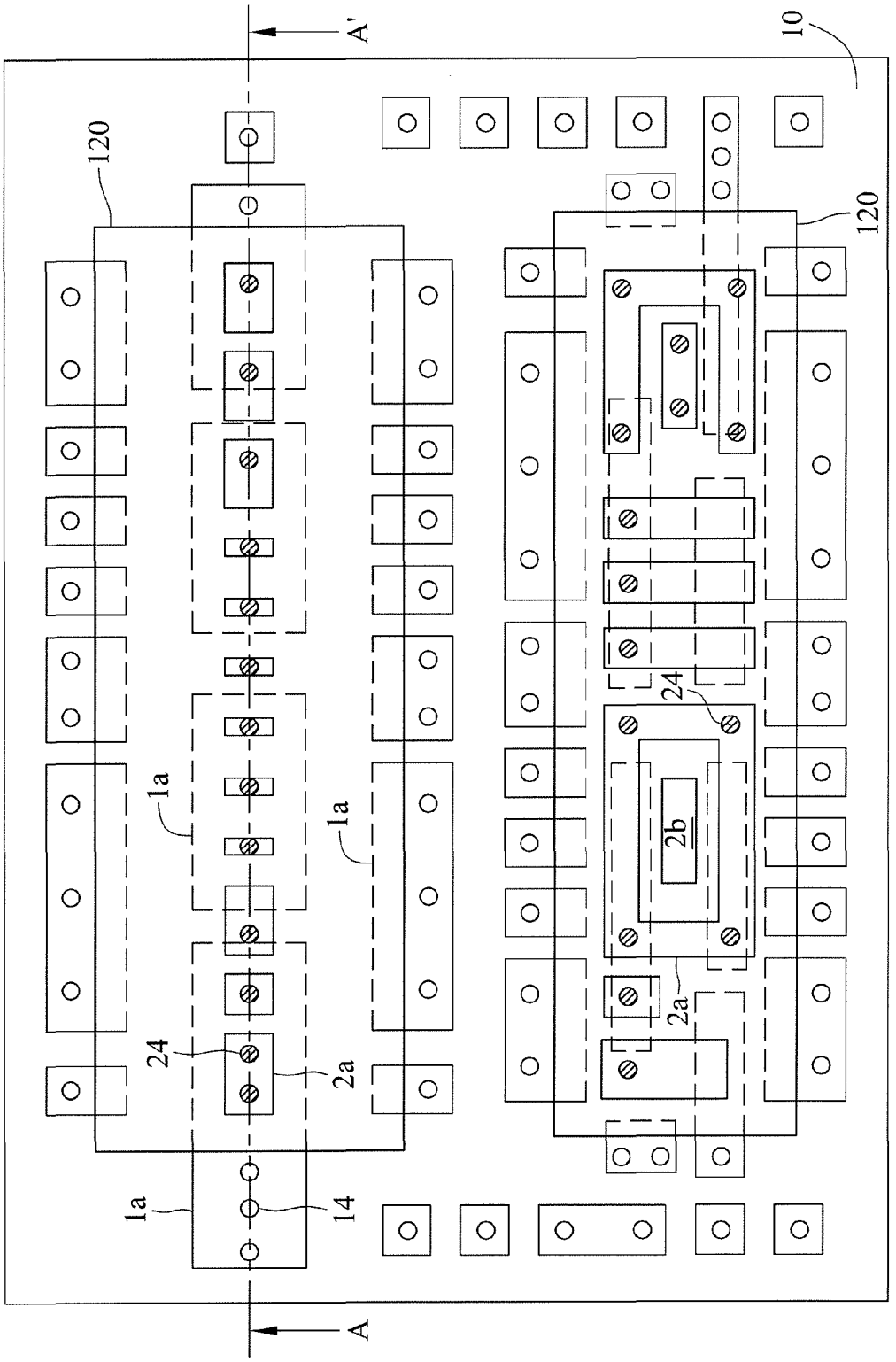

Fig. 10

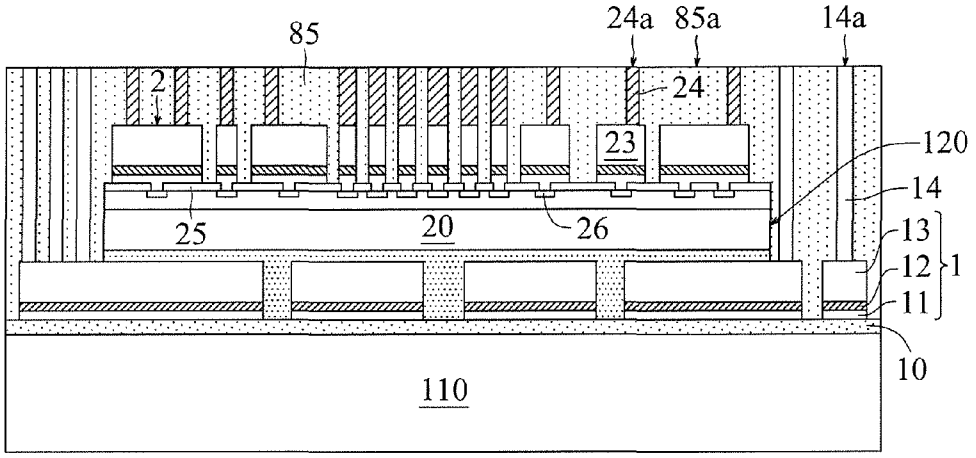
85
24a
85a
14a
2
24
23
120
14
25
20
26
13
12
1
11
10
110

Fig. 12

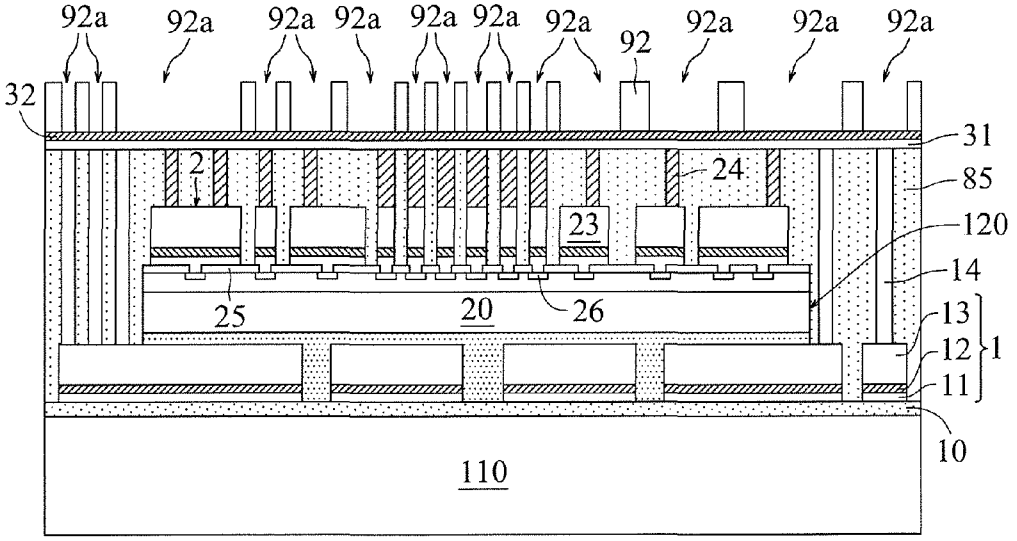
92a
92a
92a
92a
92a
92a
92a
92
92a
92a
92a
32
31
2
24
85
23
120
14
25
20
26
13
12
1
11
10
110

Fig. 13

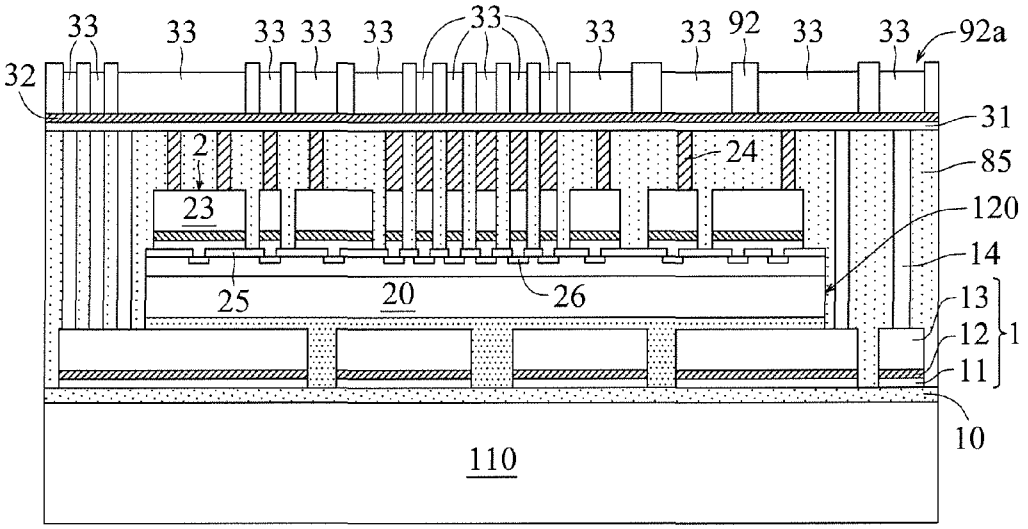
33
33
33
33
33
33
33
33
92
33
33
92a
32
31
2
24
85
23
120
14
25
20
26
13
12
1
11
10
110

Fig. 14

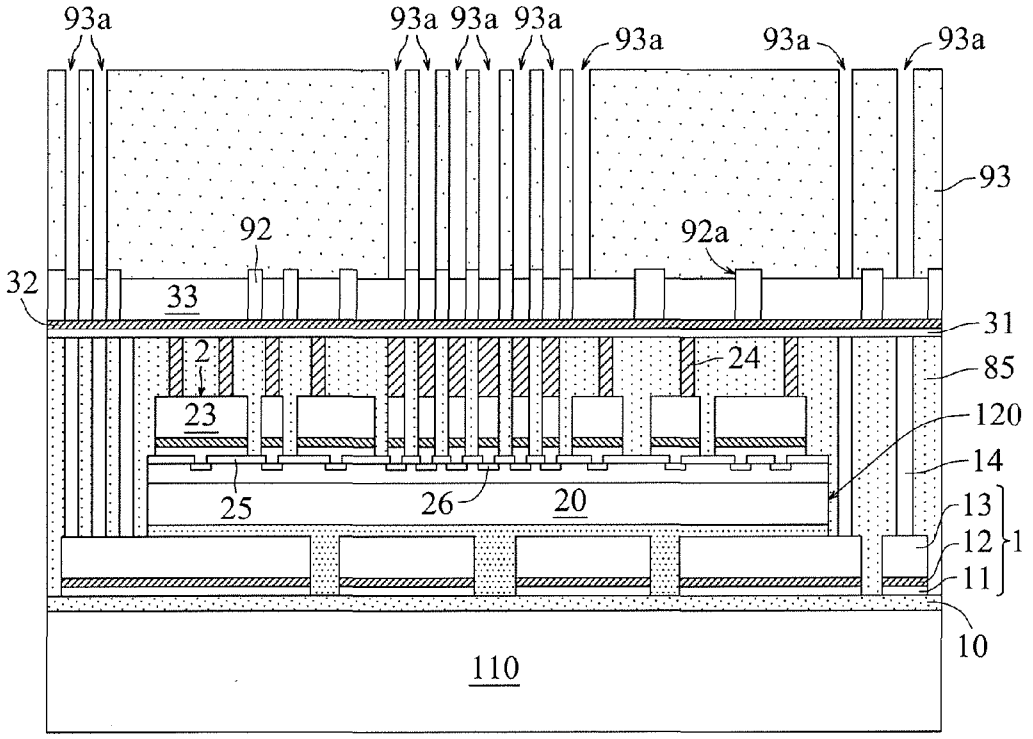
93a
93a
93a
93a
93a
93a
93a
93
92
92a
32
33
31
2
24
85
23
120
14
25
26
20
13
12
1
11
10
110

Fig. 15

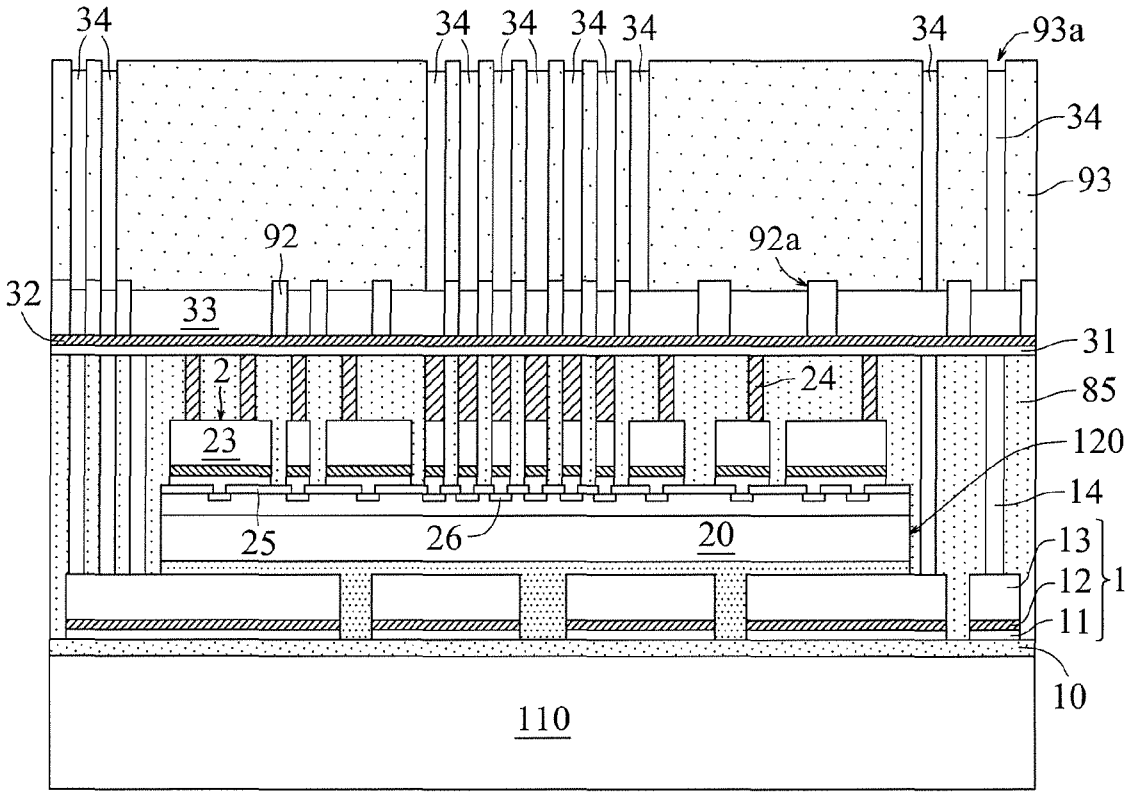
34
34
34
34
34
34
93a
34
93
92
92a
32
33
31
2
24
85
23
120
14
25
26
20
13
12
1
11
10
110

Fig. 16

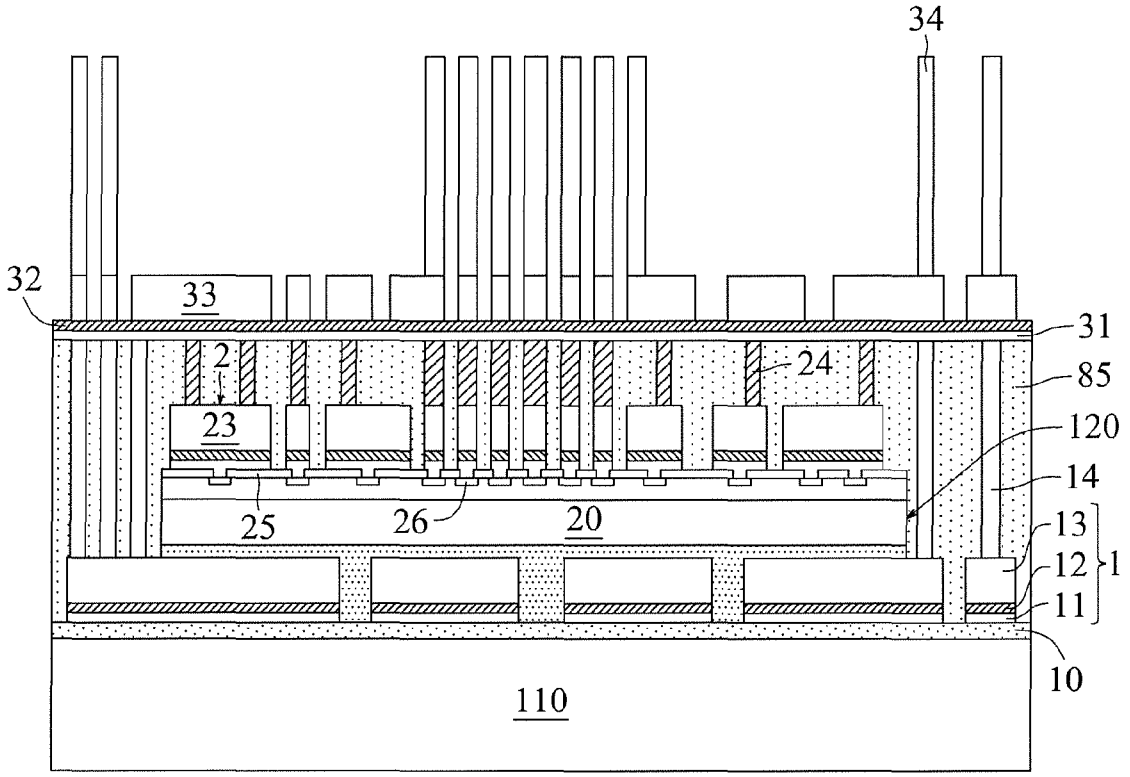

Fig. 17

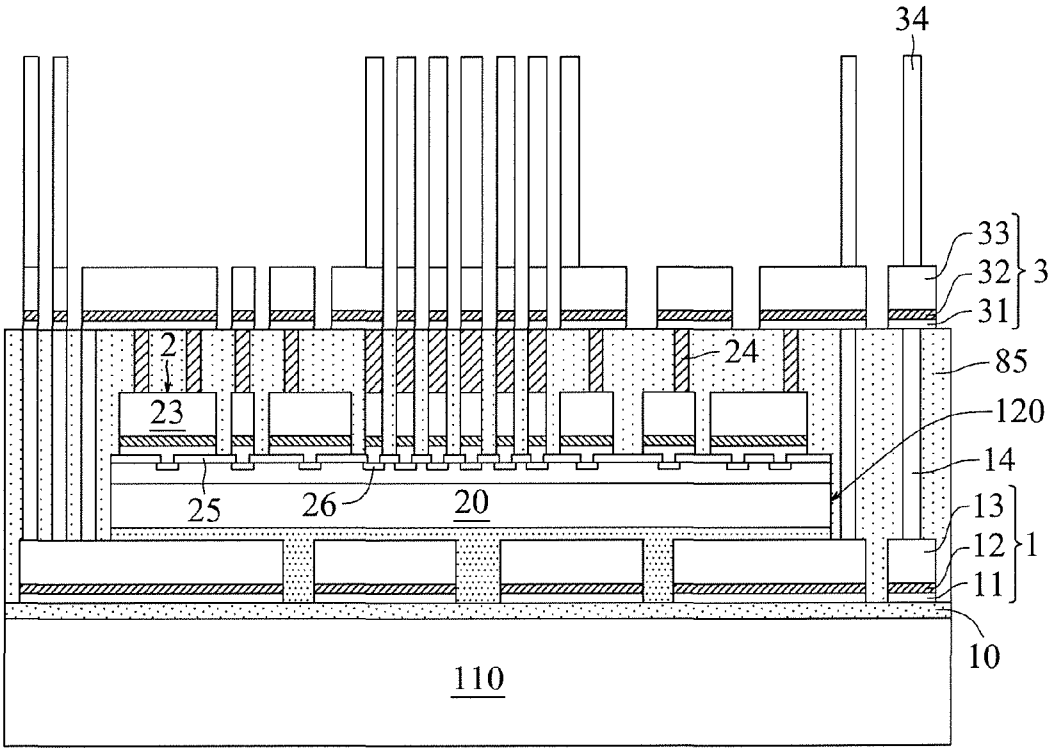

Fig. 18

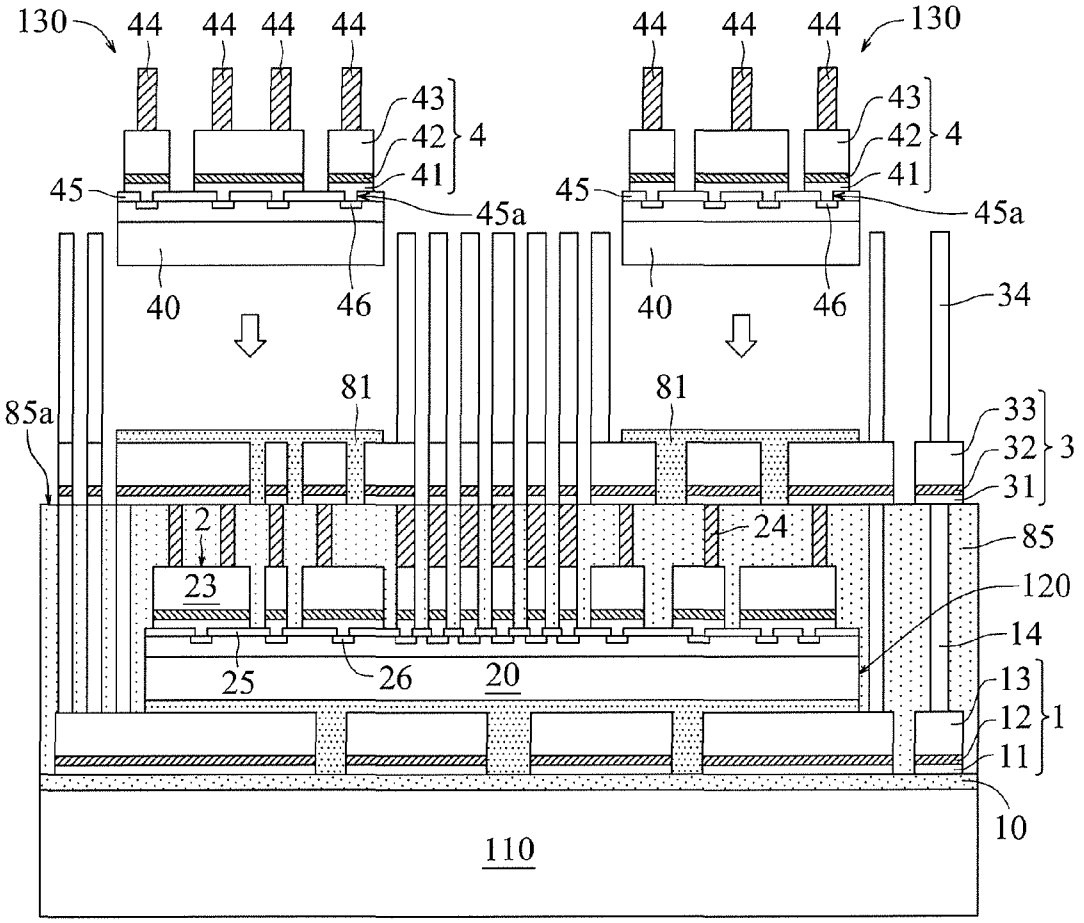
130
44
44
44
44
44
44
44
130
43
42
41
4
43
42
41
4
45
45a
45
45a
40
46
40
46
34
81
81
85a
33
32
31
3
2
24
85
23
120
14
25
26
20
13
12
11
1
10
110

Fig. 19

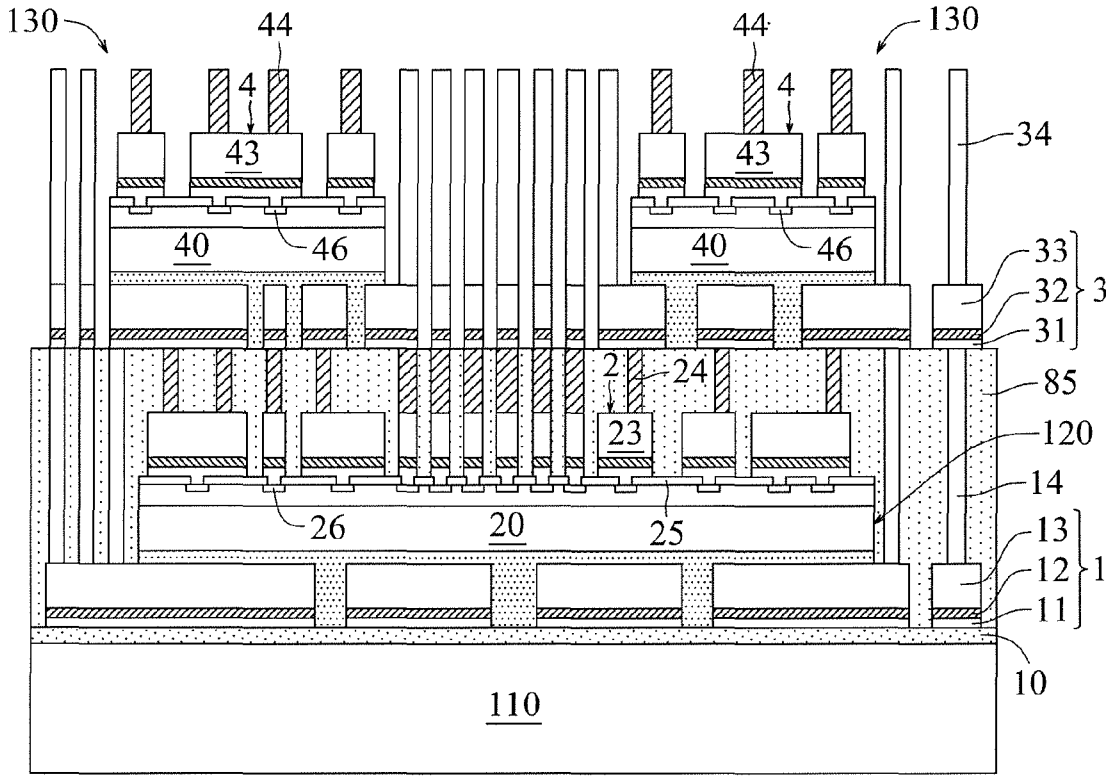
130
44
4
43
40
46
44
4
43
40
46
130
34
33
32
31
3
2
24
23
85
120
14
26
20
25
13
12
11
1
10
110

Fig. 20

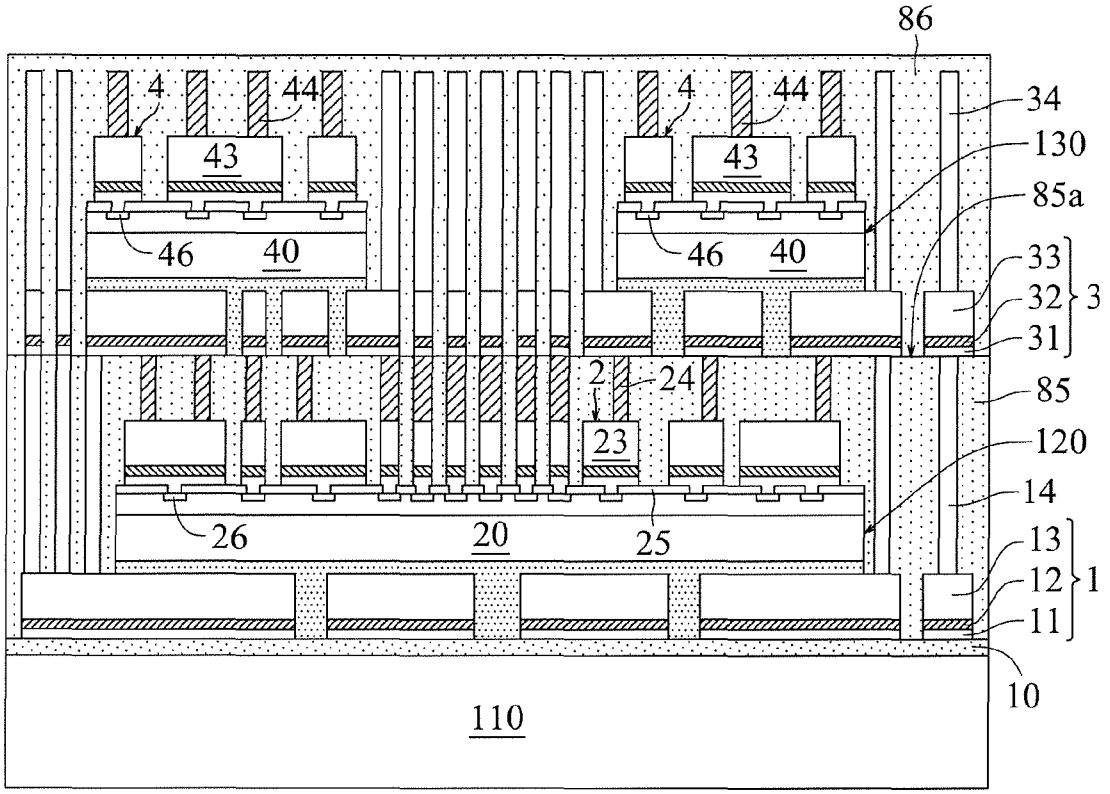
86
4
44
43
46
40
34
130
85a
33
32
31
3
2
24
23
85
120
14
26
20
25
13
12
11
1
10
110

Fig. 21

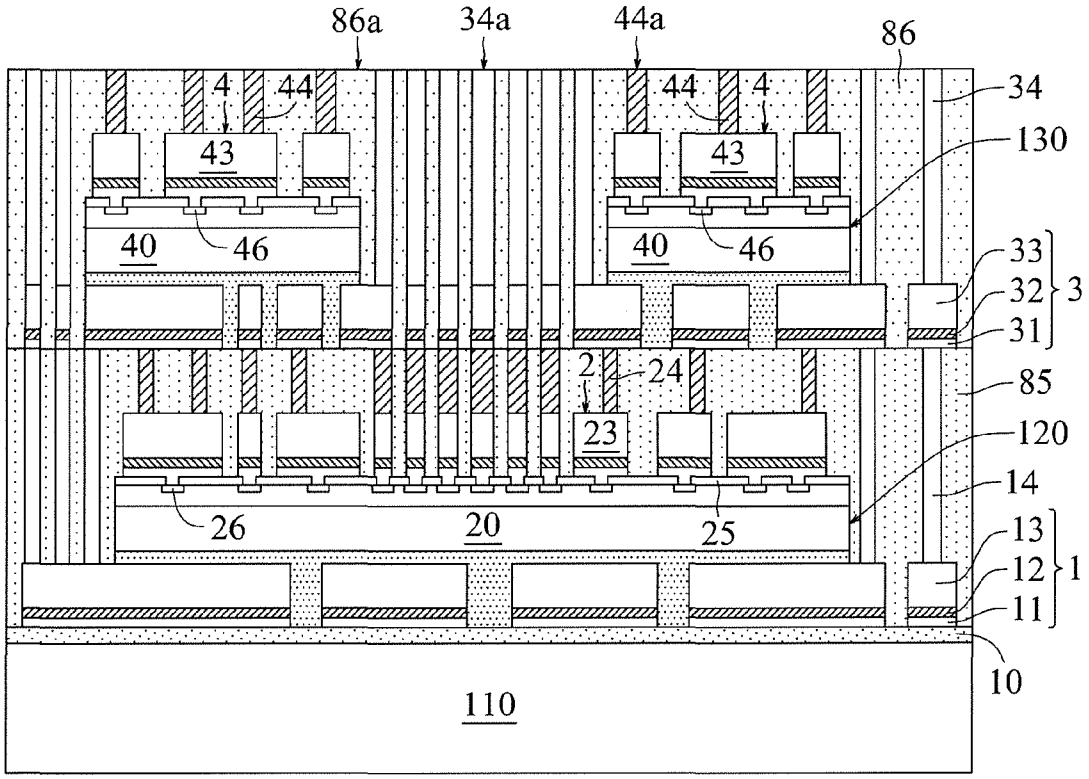
86a
34a
44a
86
4
44
44
4
34
43
43
130
40
46
40
46
33
32
3
31
2
24
85
23
120
14
26
20
25
13
12
1
11
10
110

Fig. 22

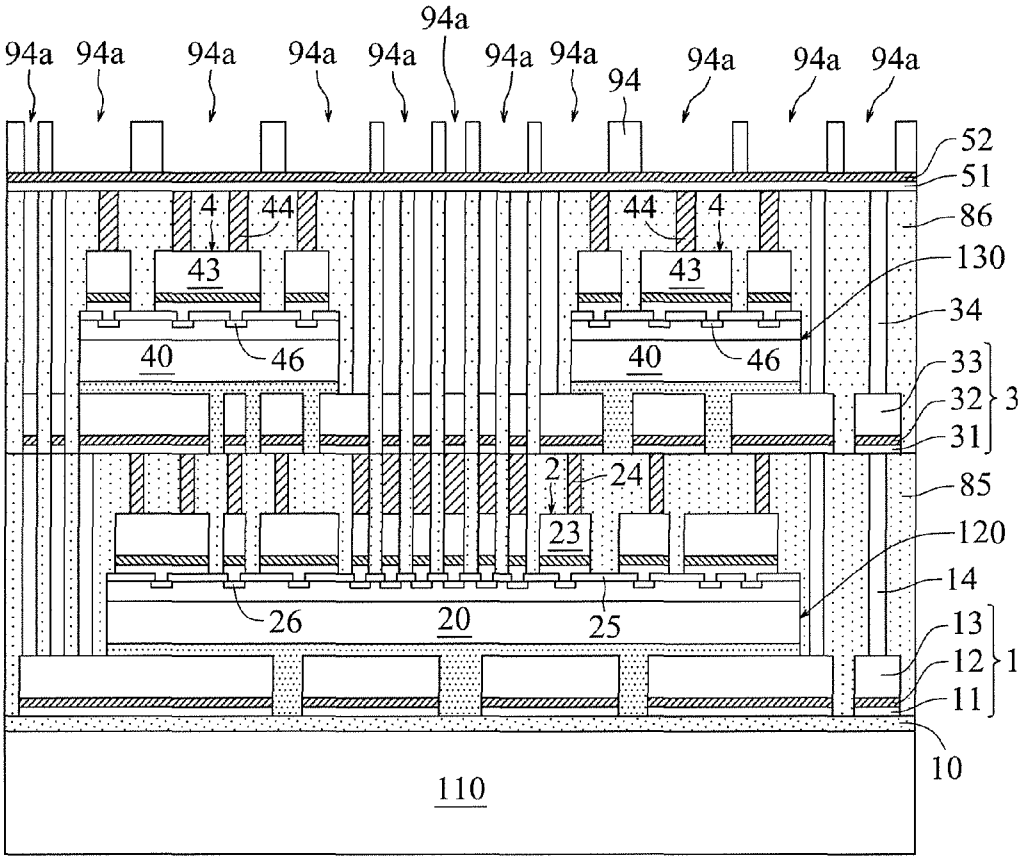
94a
94a
94a
94a
94a
94a
94a
94a
94
94a
94a
94a
52
51
86
130
34
33
32
31
3
85
120
14
13
12
11
1
10
4
44
43
40
46
2
24
23
26
20
25
110

Fig. 23

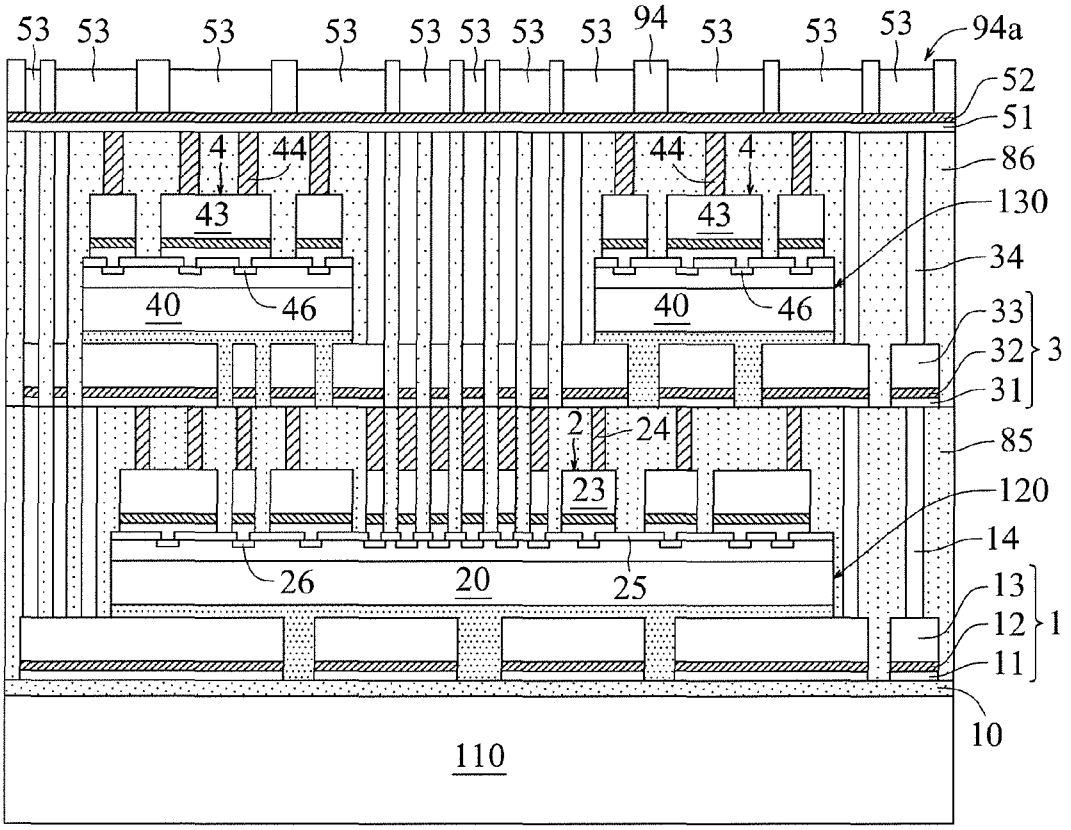
53
53
53
53
53
53
53
53
94
53
53
53
94a
52
51
86
130
34
33
32
31
3
85
120
14
13
12
11
1
10
4
44
43
40
46
44
4
43
40
46
2
24
23
26
20
25
110

Fig. 24

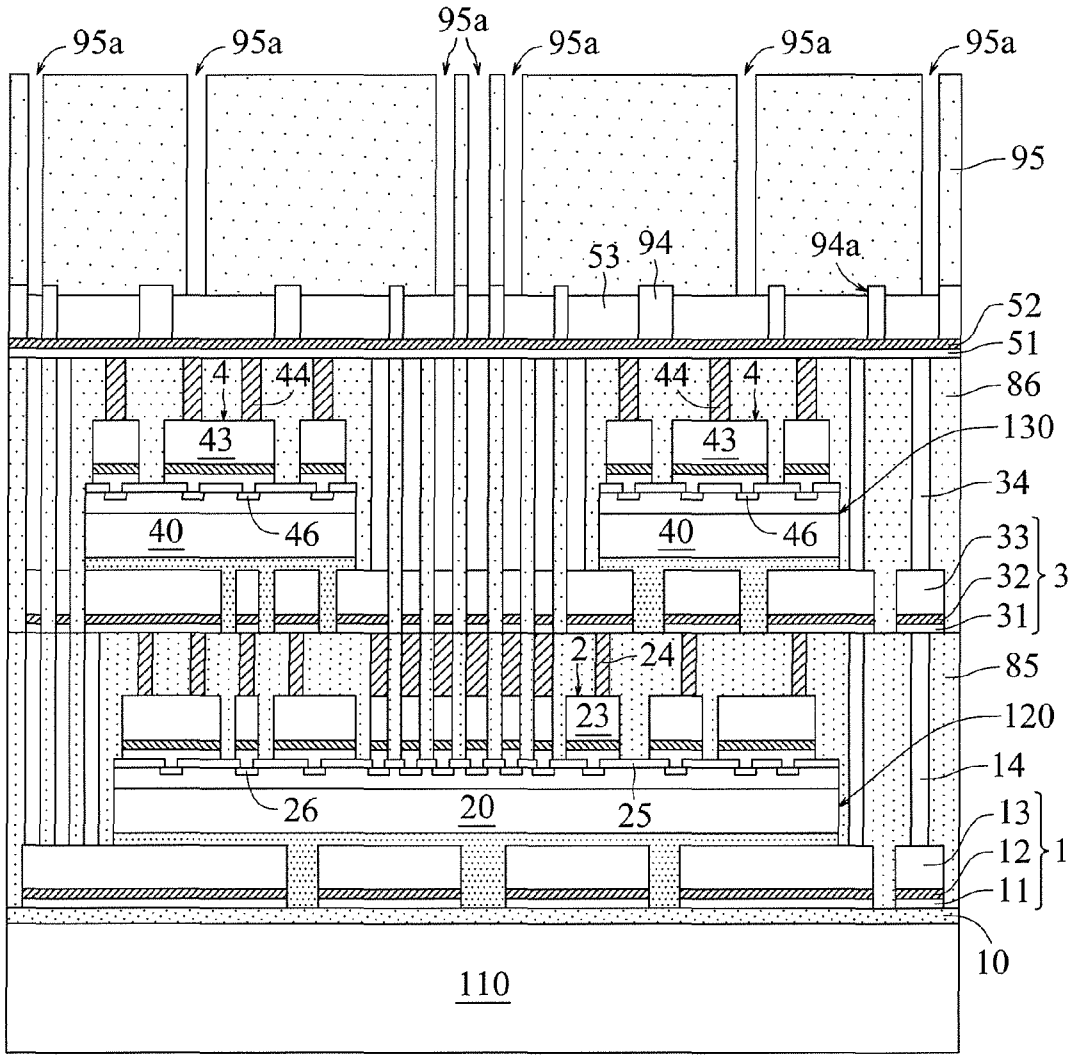
95a
95a
95a
95a
95a
95a
95
53
94
94a
52
51
4
44
44
4
86
43
43
130
34
40
46
40
46
33
32
3
31
2
24
85
23
120
14
26
20
25
13
12
1
11
10
110

Fig. 25

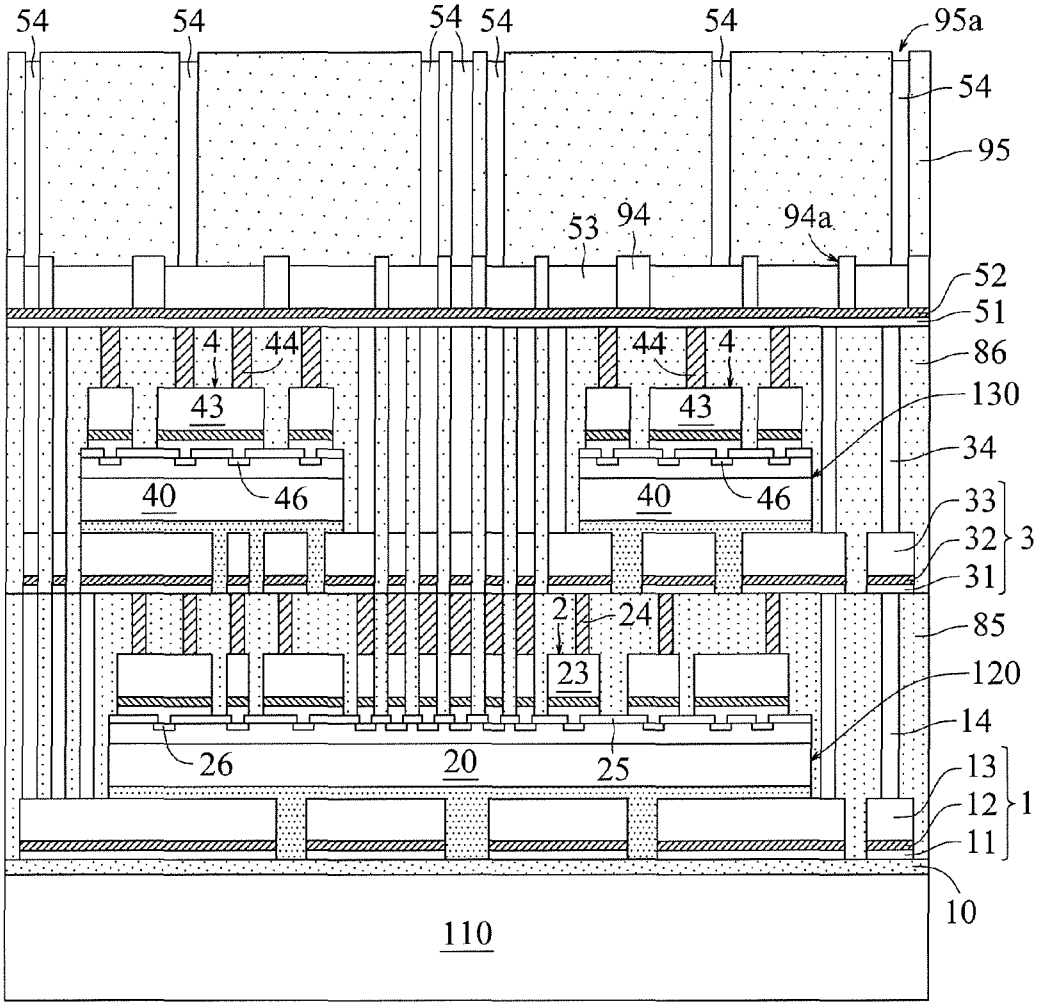
54
54
54
54
54
95a
54
95
53
94
94a
52
51
4
44
44
4
86
43
43
130
34
40
46
40
46
33
32
3
31
2
24
85
23
120
14
26
20
25
13
12
1
11
10
110

Fig. 26

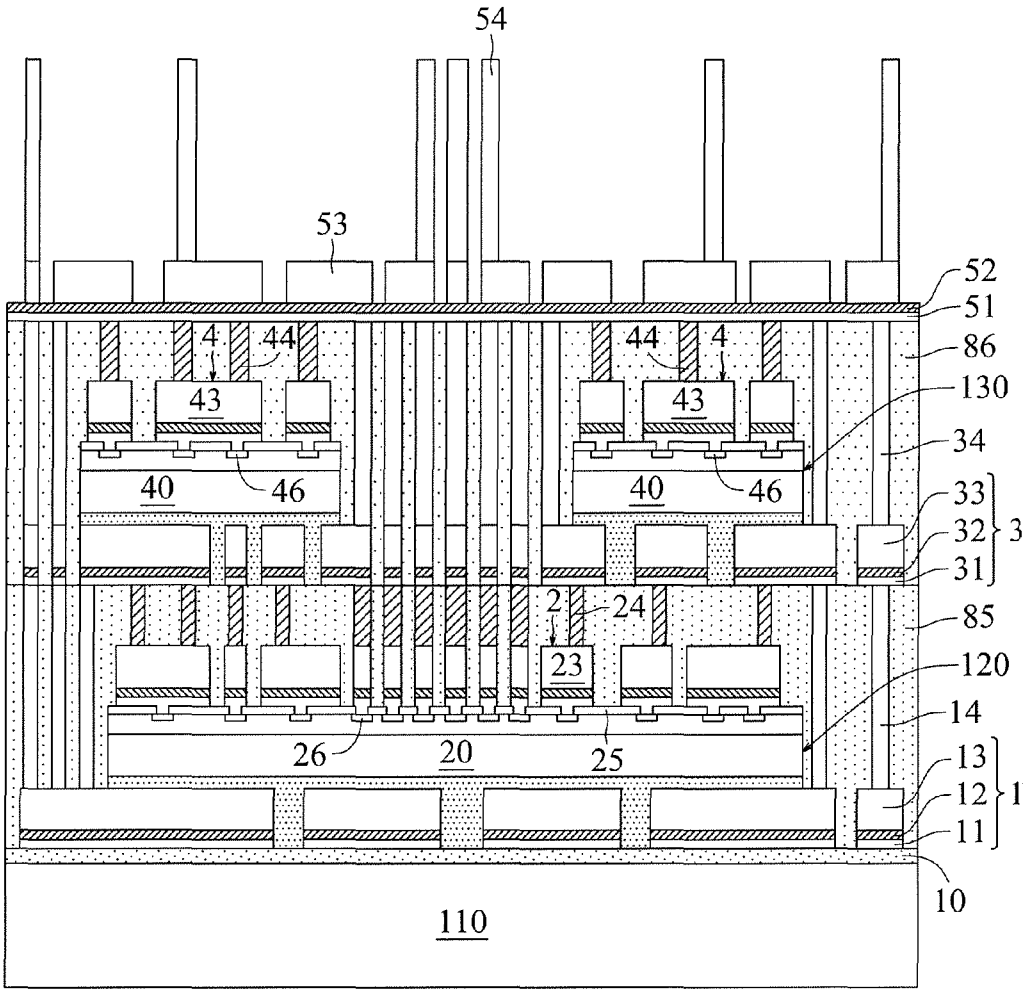
54
53
52
51
86
130
34
33
32
31
3
85
120
14
13
12
11
1
10
110
4
44
43
40
46
2
24
23
26
20
25

Fig. 27

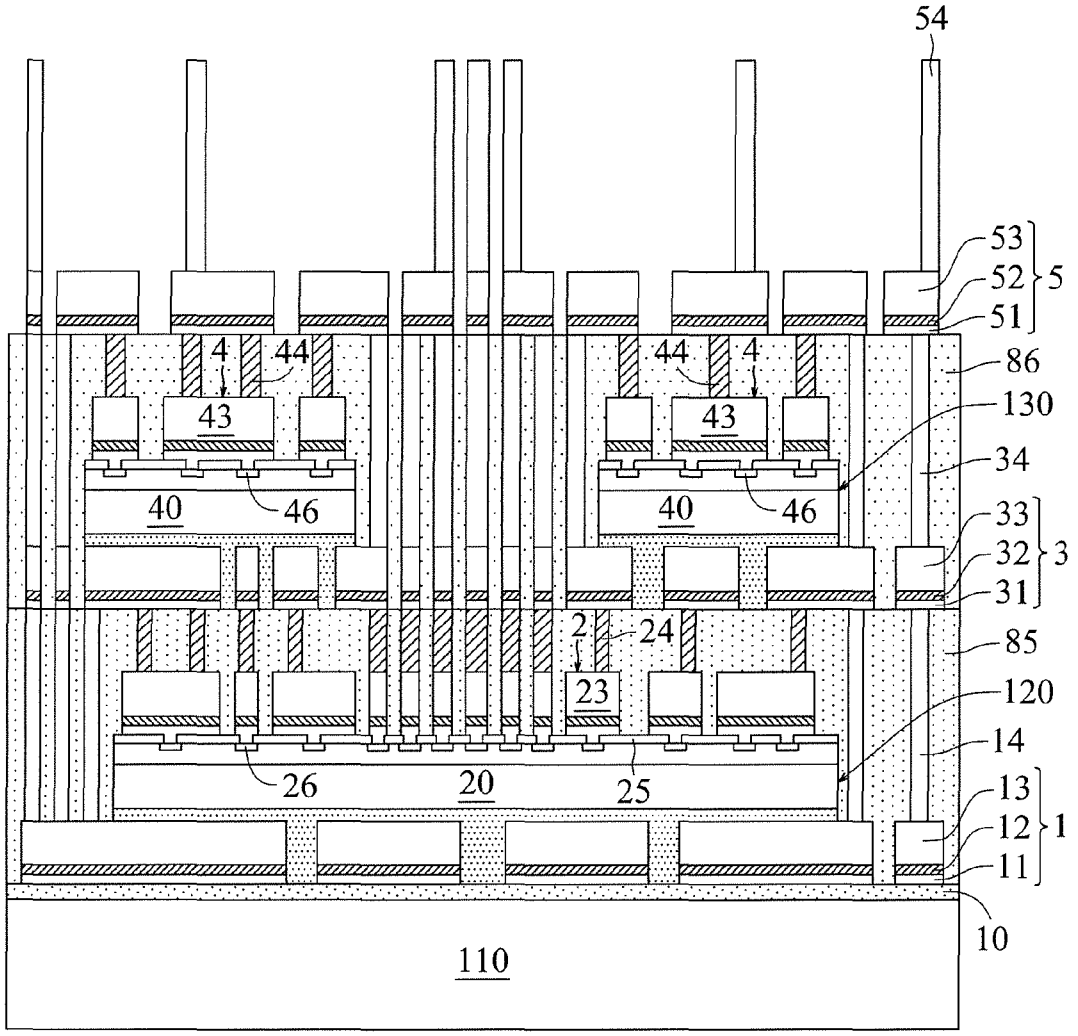
54
53
52
51
5
86
130
34
33
32
31
3
85
120
14
13
12
11
1
10
110
4
44
43
40
46
2
24
23
26
20
25

Fig. 28

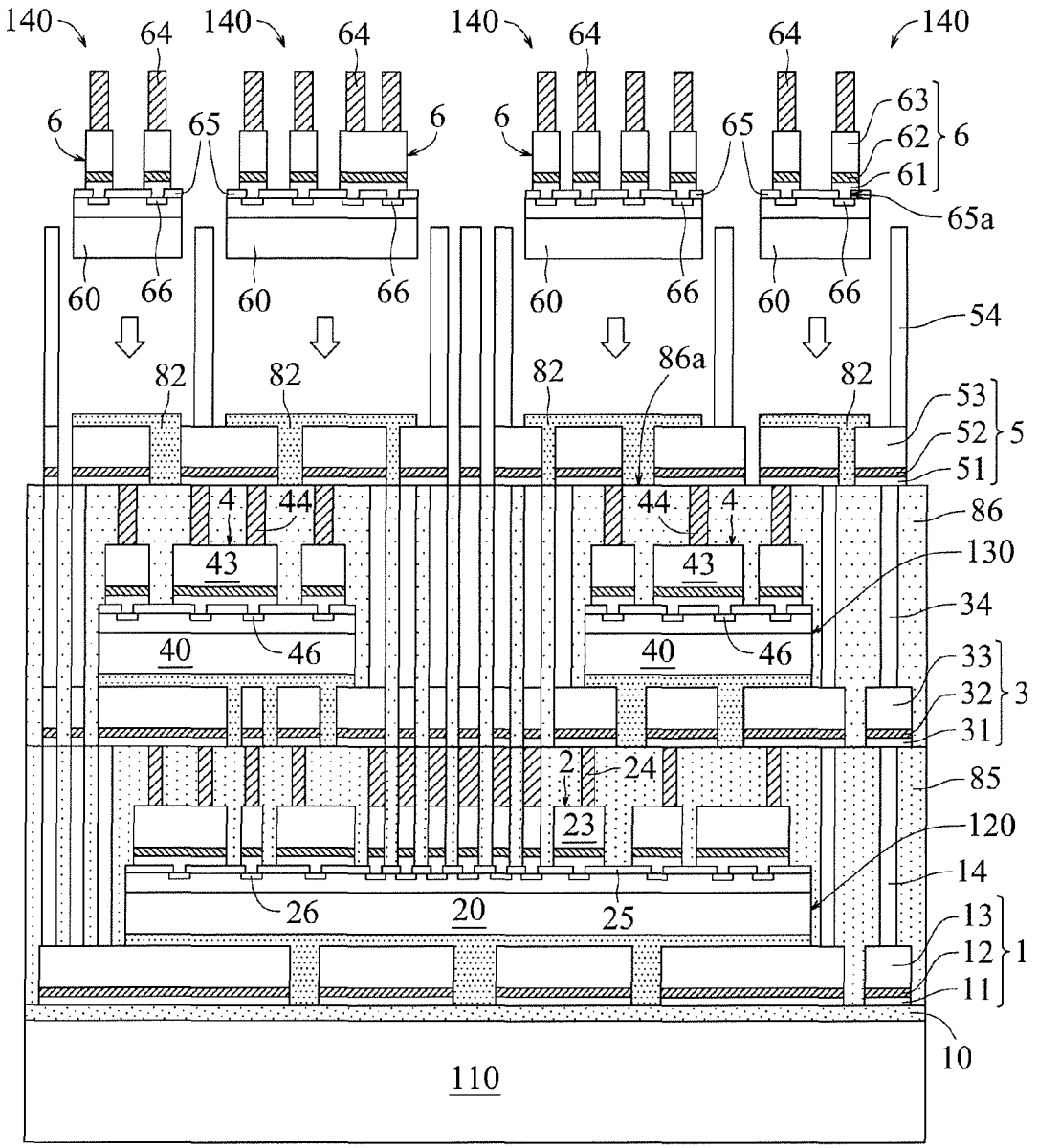
140
64
6
65
60
66
82
86a
63
62
61
65a
54
53
52
51
5
4
44
43
40
46
86
130
34
33
32
31
3
2
24
23
85
120
14
26
20
25
13
12
11
1
10
110

Fig. 29

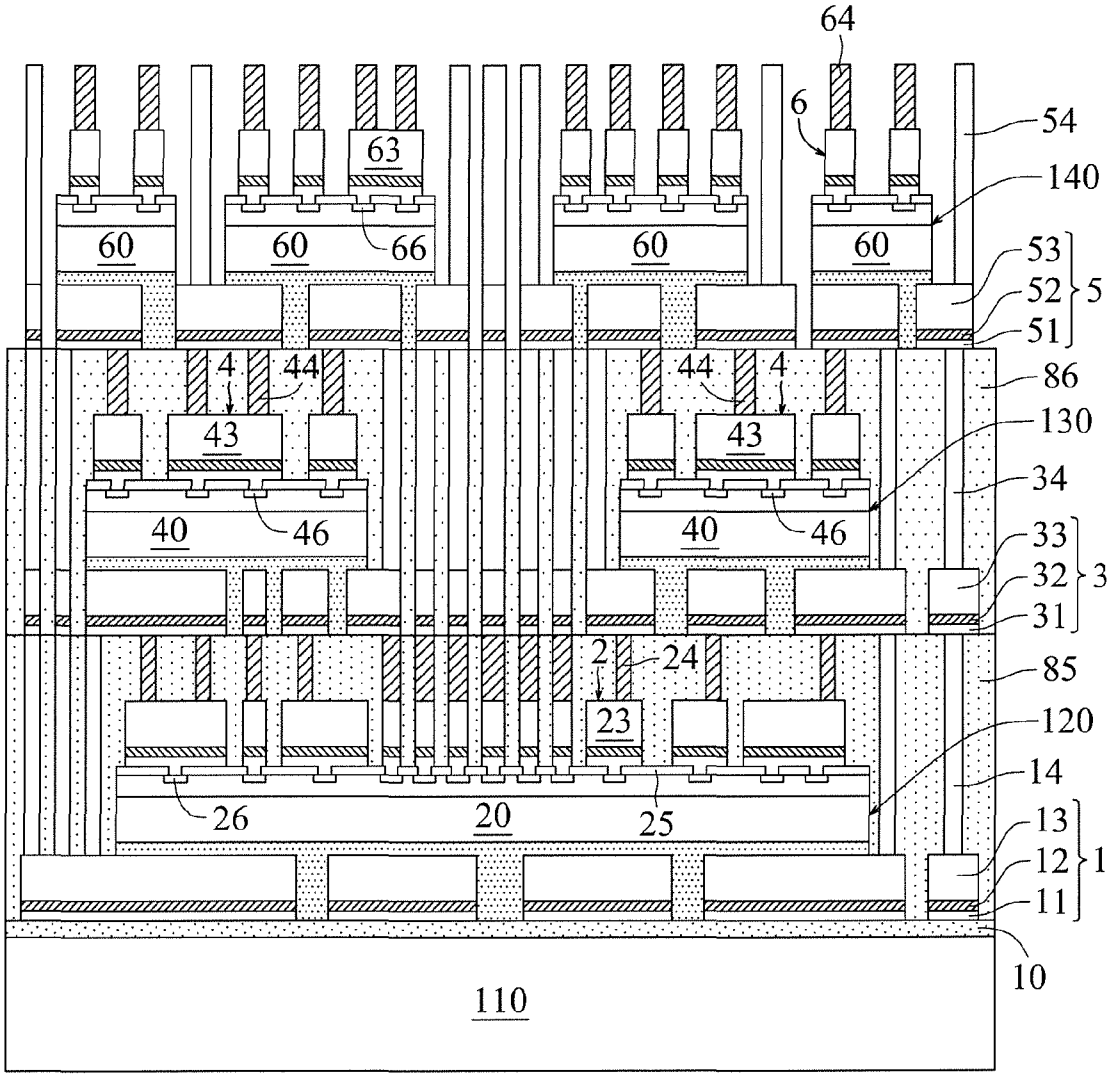
64
6
54
140
63
60
60
66
60
60
53
52
5
51
4
44
44
4
86
43
43
130
34
40
46
40
46
33
32
3
31
2
24
85
23
120
14
26
20
25
13
12
1
11
10
110

Fig. 30

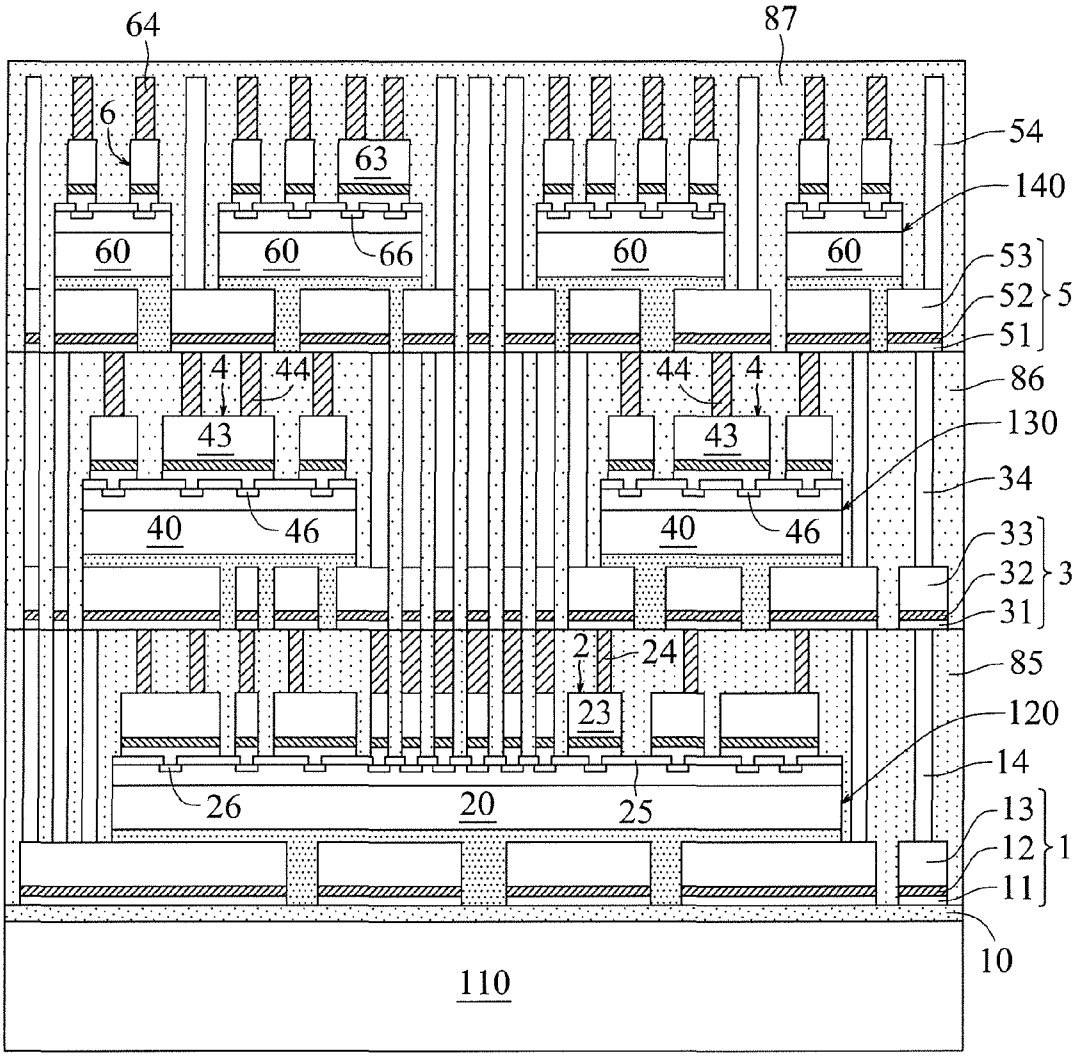
64
87
6
63
54
140
60
60
66
60
60
53
52
5
51
4
44
44
4
86
43
43
130
34
40
46
40
46
33
32
3
31
2
24
85
23
120
14
26
20
25
13
12
1
11
10
110

Fig. 31

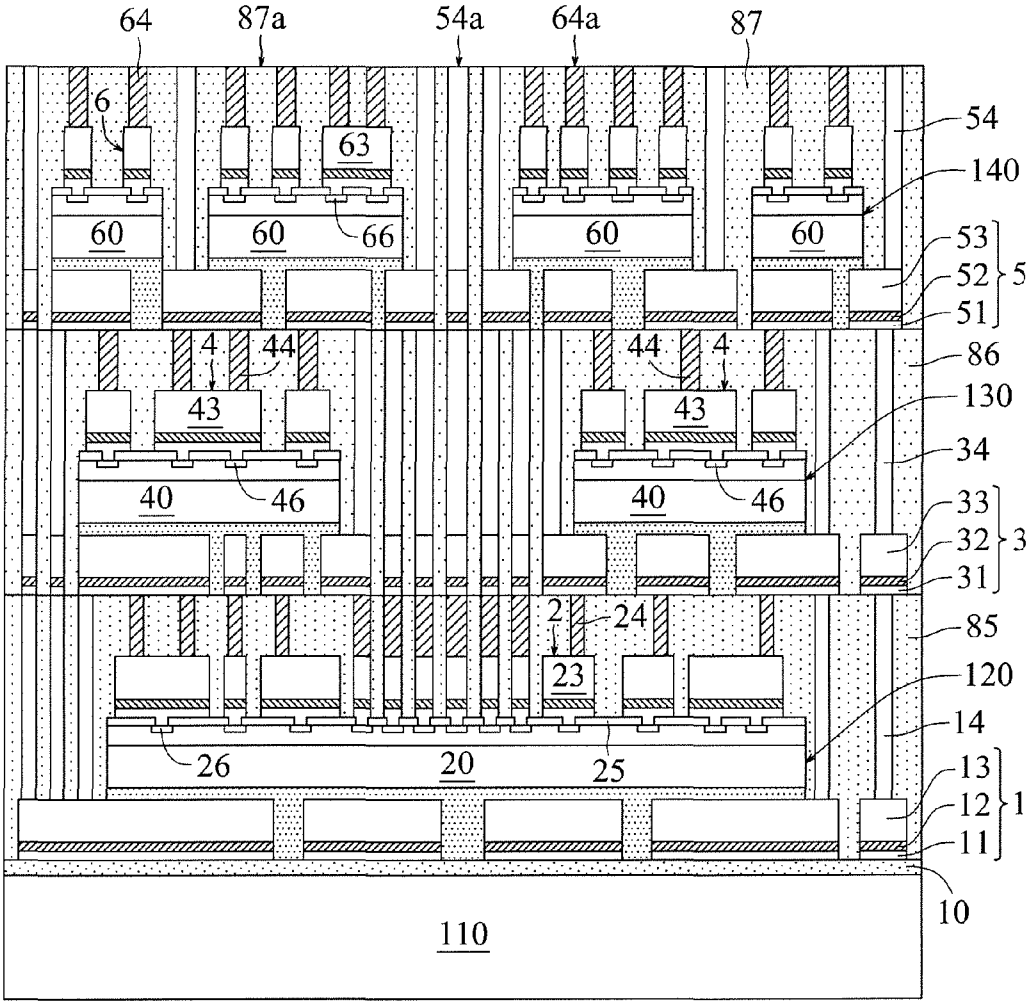
64
87a
54a
64a
87
6
63
54
140
60
60
66
60
60
53
52
5
51
4
44
44
4
86
43
43
130
34
40
46
40
46
33
32
3
31
2
24
85
23
120
14
26
20
25
13
12
1
11
10
110

Fig. 32

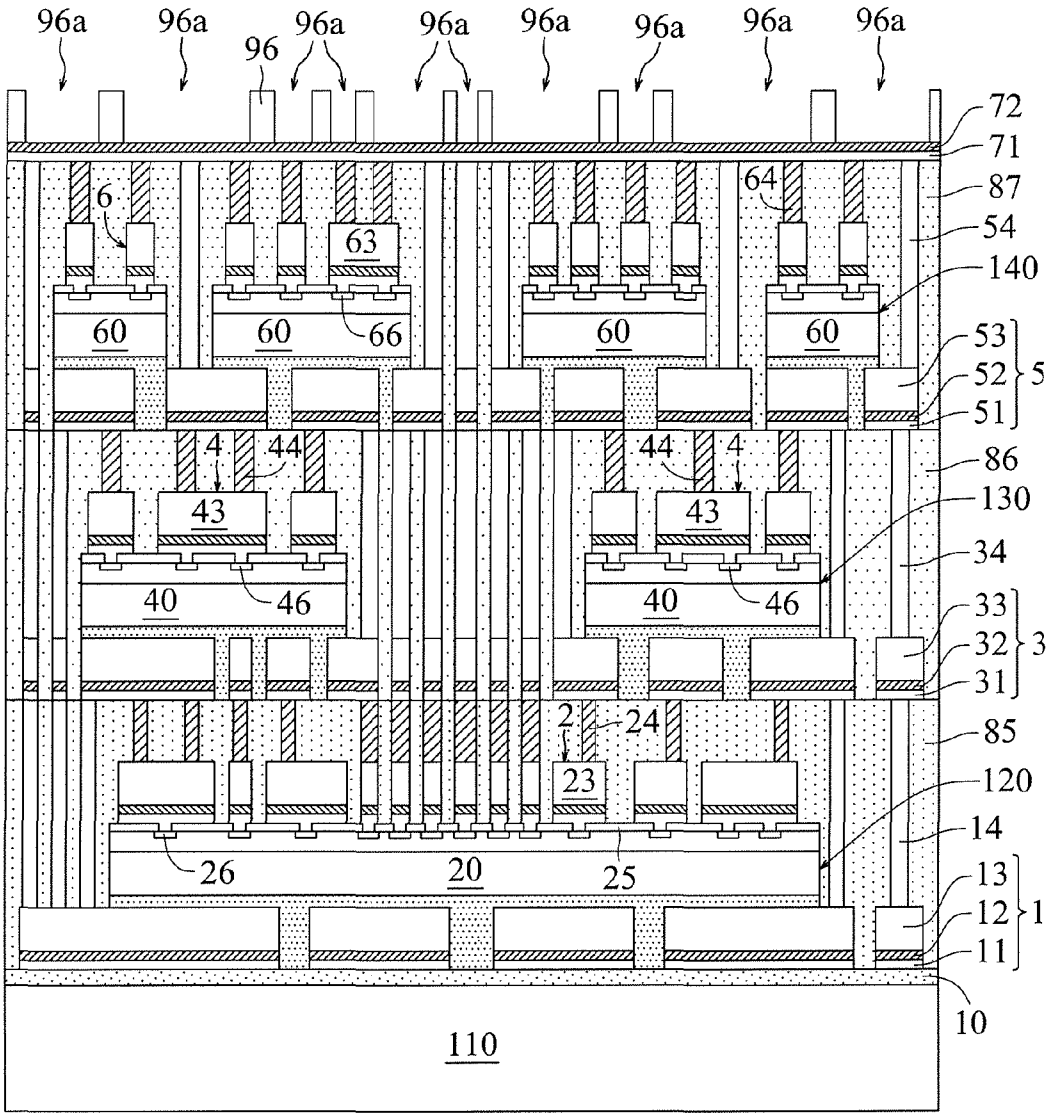
96a
96a
96
96a
96a
96a
96a
96a
96a
72
71
87
54
140
6
63
64
60
60
66
60
60
53
52
51
5
4
44
44
4
86
43
43
130
34
40
46
40
46
33
32
31
3
2
24
85
23
120
14
26
20
25
13
12
11
1
10
110

Fig. 33

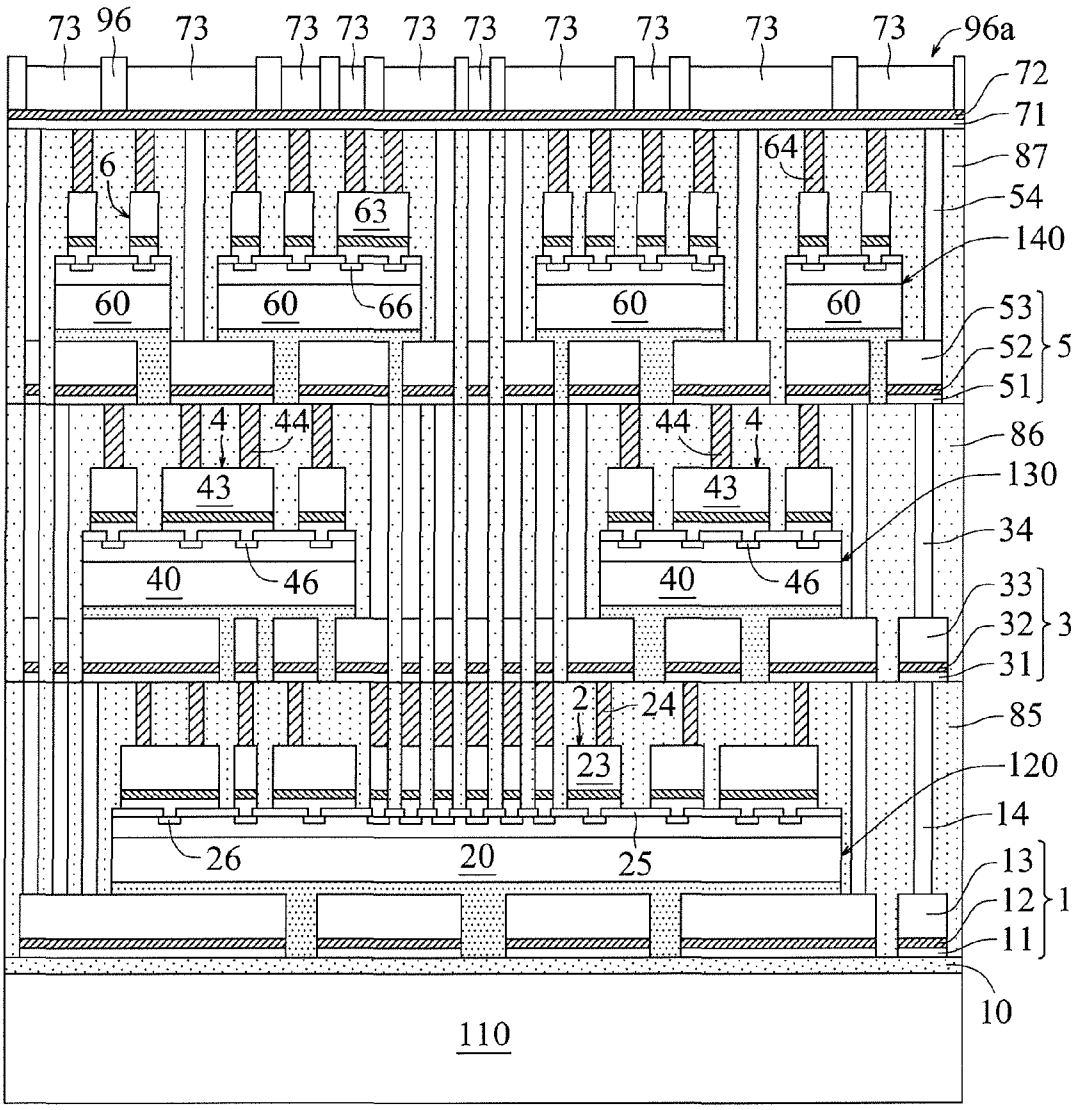
73
96
73
73
73
73
73
73
73
73
73
96a
72
71
87
54
140
6
63
64
60
60
66
60
60
53
52
5
51
4
44
44
4
86
43
43
130
34
40
46
40
46
33
32
3
31
2
24
85
23
120
14
26
20
25
13
12
1
11
10
110

Fig. 34

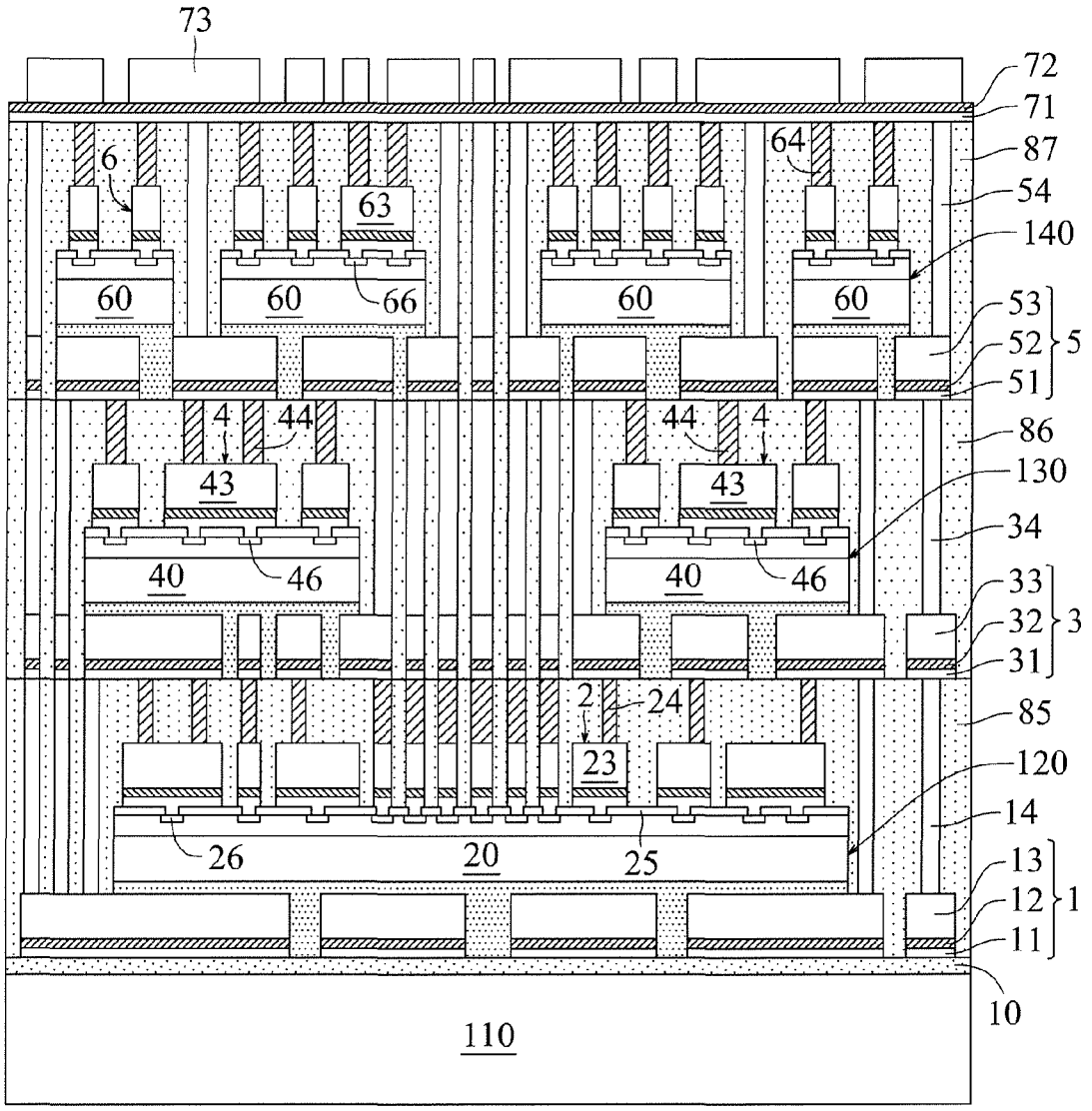
73
72
71
87
54
140
6
63
64
60
60
66
60
60
53
52
51
5
4
44
44
4
86
43
43
130
34
40
46
40
46
33
32
31
3
2
24
85
23
120
14
26
20
25
13
12
11
1
10
110

Fig. 35

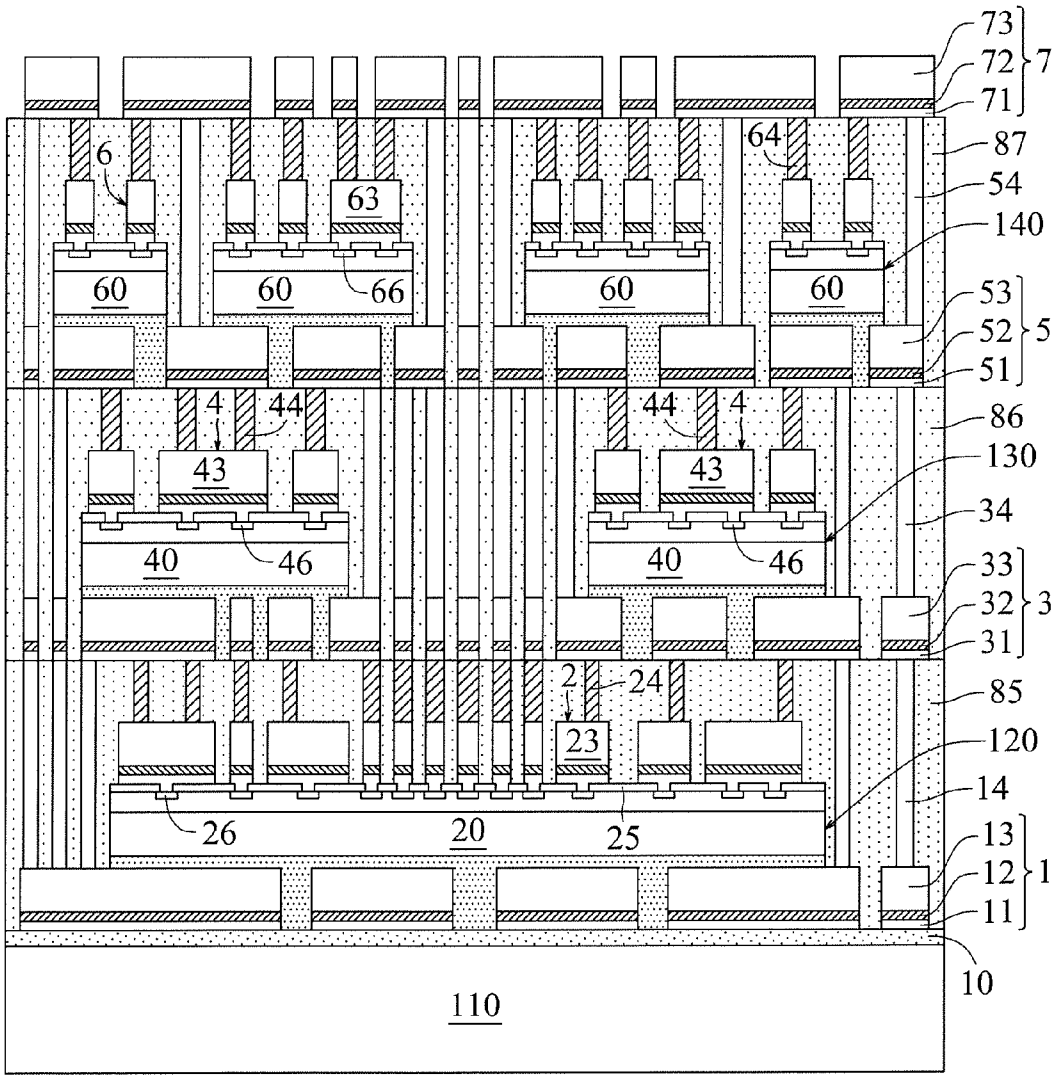
73
72
71
7
87
54
140
53
52
5
51
86
130
34
33
32
3
31
85
120
14
13
12
1
11
10
110
6
63
64
60
60
66
60
60
4
44
44
4
43
43
40
46
40
46
2
24
23
26
20
25

Fig. 36

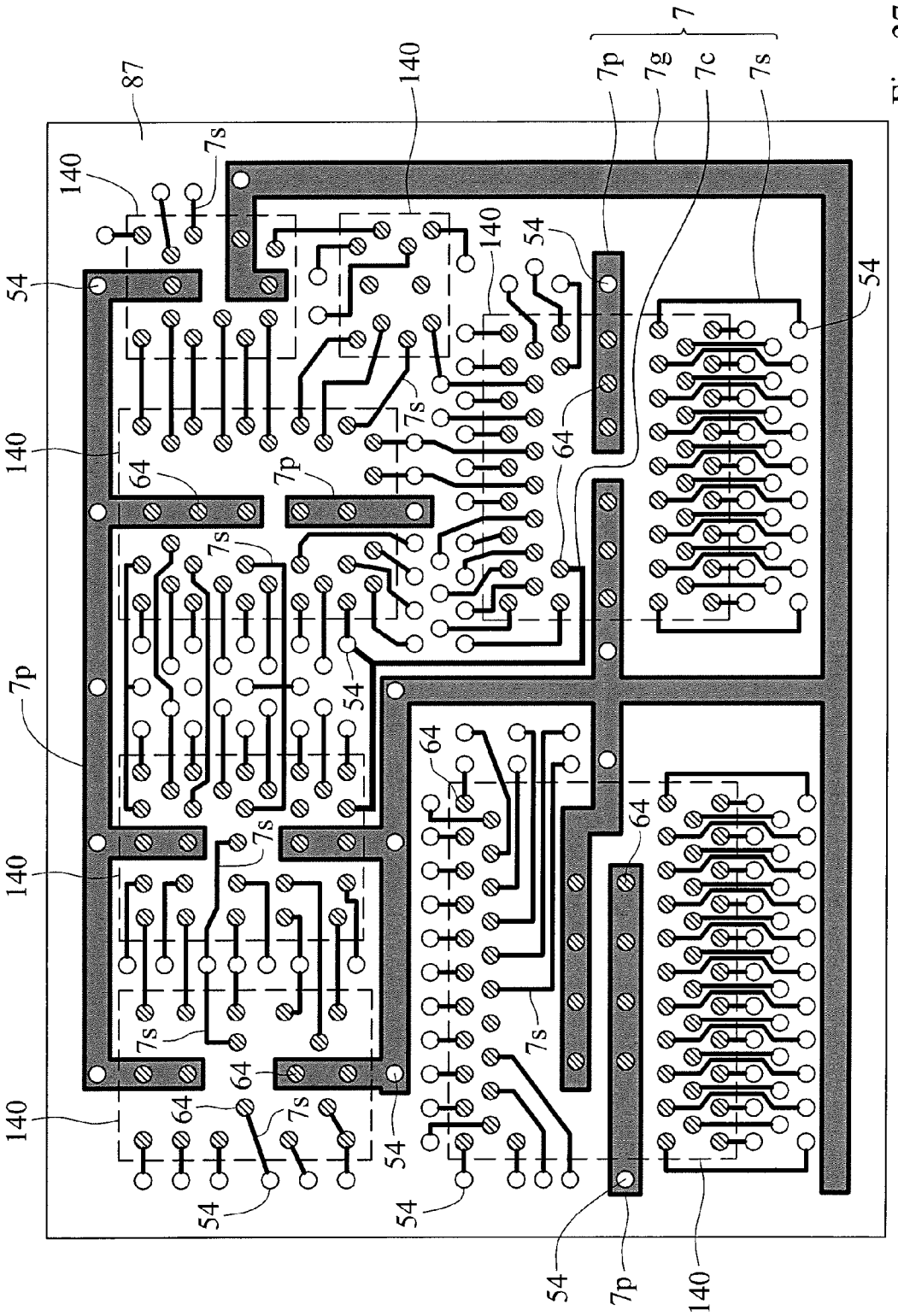

Fig. 37

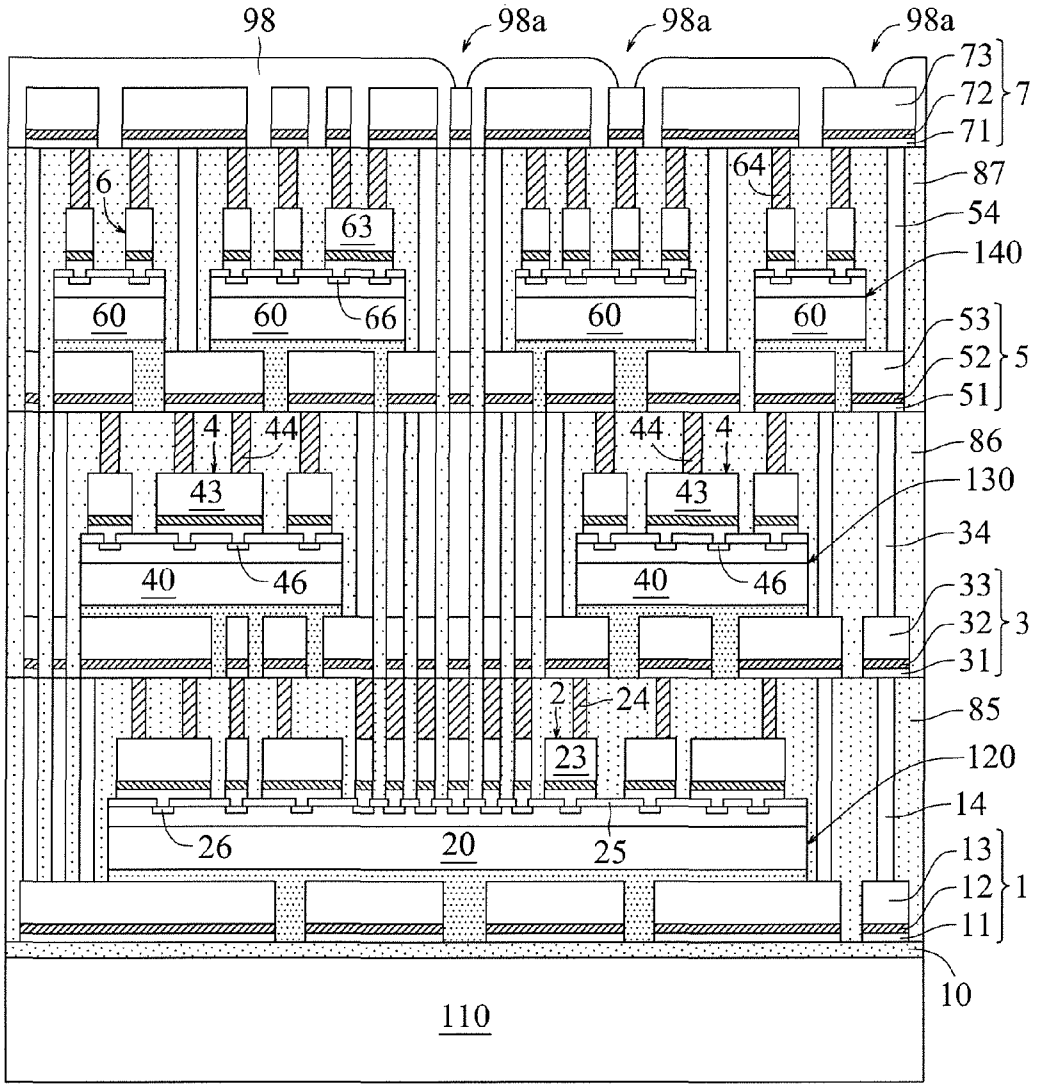
98
98a
98a
98a
73
72
71
7
87
54
140
6
63
64
60
60
66
60
60
53
52
51
5
4
44
44
4
86
43
43
130
34
40
46
40
46
33
32
31
3
2
24
85
23
120
14
26
20
25
13
12
11
1
10
110

Fig. 38

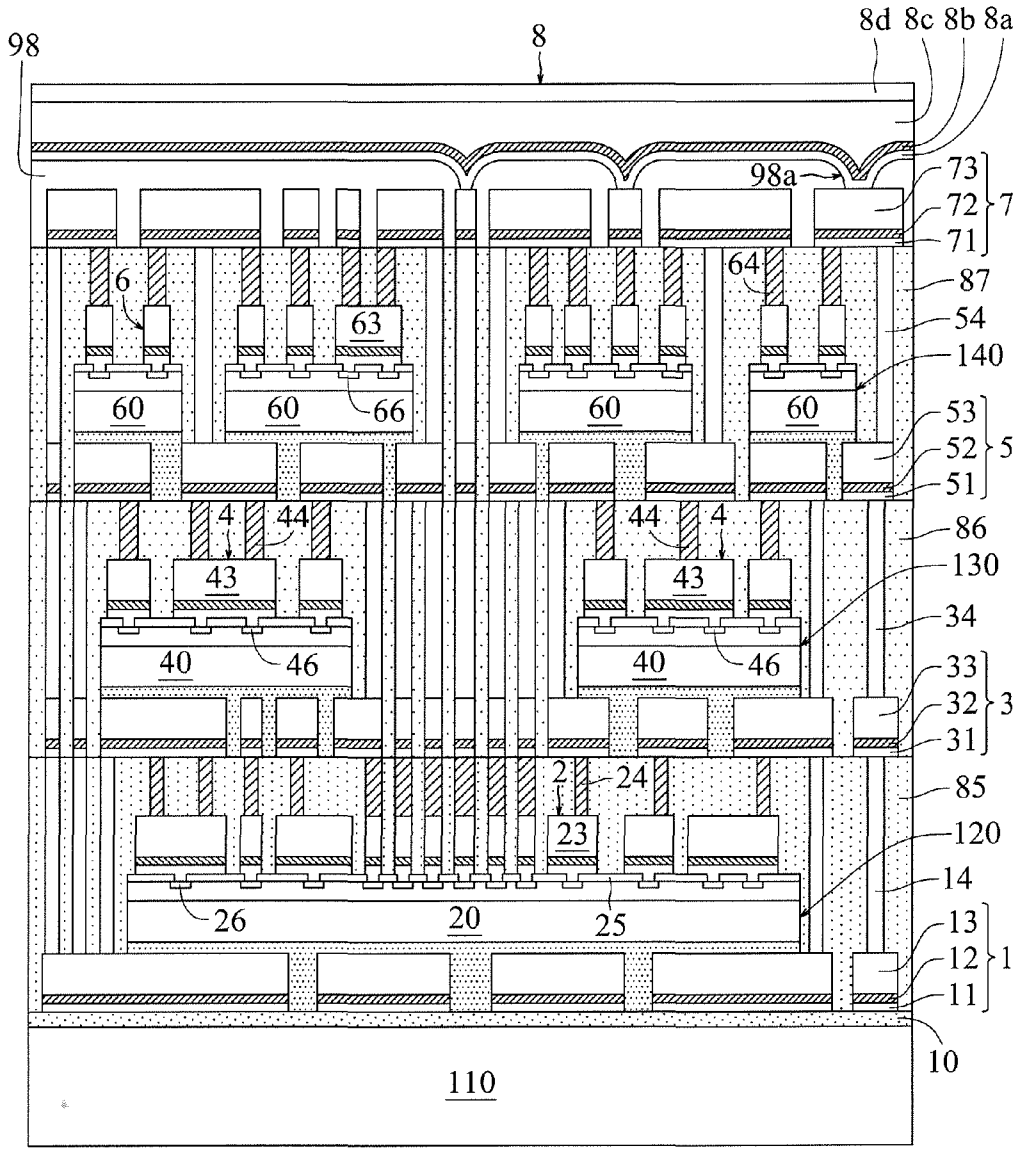
98
8
8d 8c 8b 8a
98a
73
72
71
7
6
63
64
87
54
140
60
60
66
60
60
53
52
51
5
4
44
44
4
86
43
43
130
34
40
46
40
46
33
32
31
3
2
24
85
23
120
14
26
20
25
13
12
11
1
10
110

Fig. 39

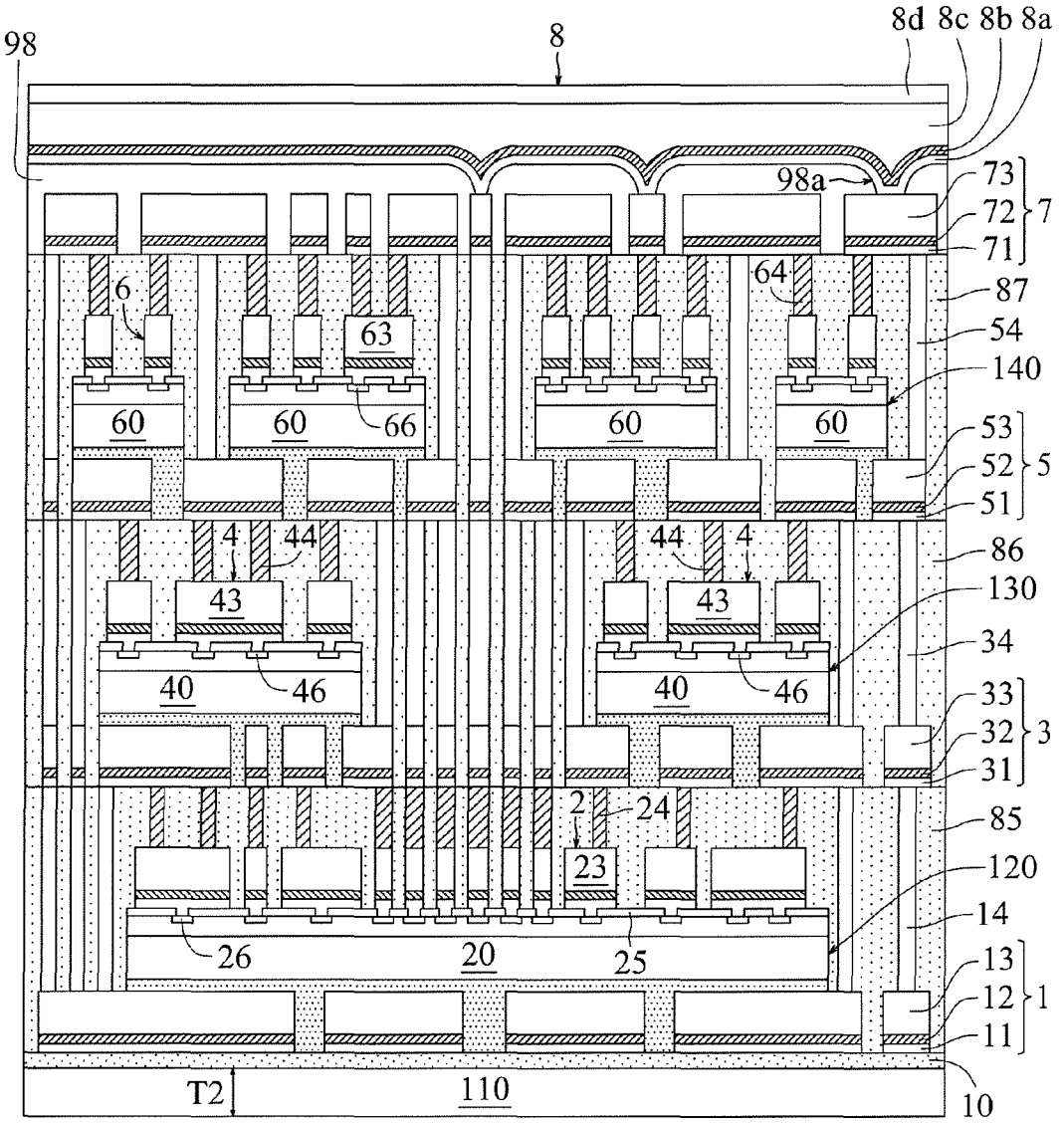
98
8
8d 8c 8b 8a
98a
73
72
71
7
6
64
87
63
54
140
60
60
66
60
60
53
52
51
5
4
44
44
4
86
43
43
130
34
40
46
40
46
33
32
31
3
2
24
85
23
120
14
26
20
25
13
12
11
1
T2
110
10

Fig. 40

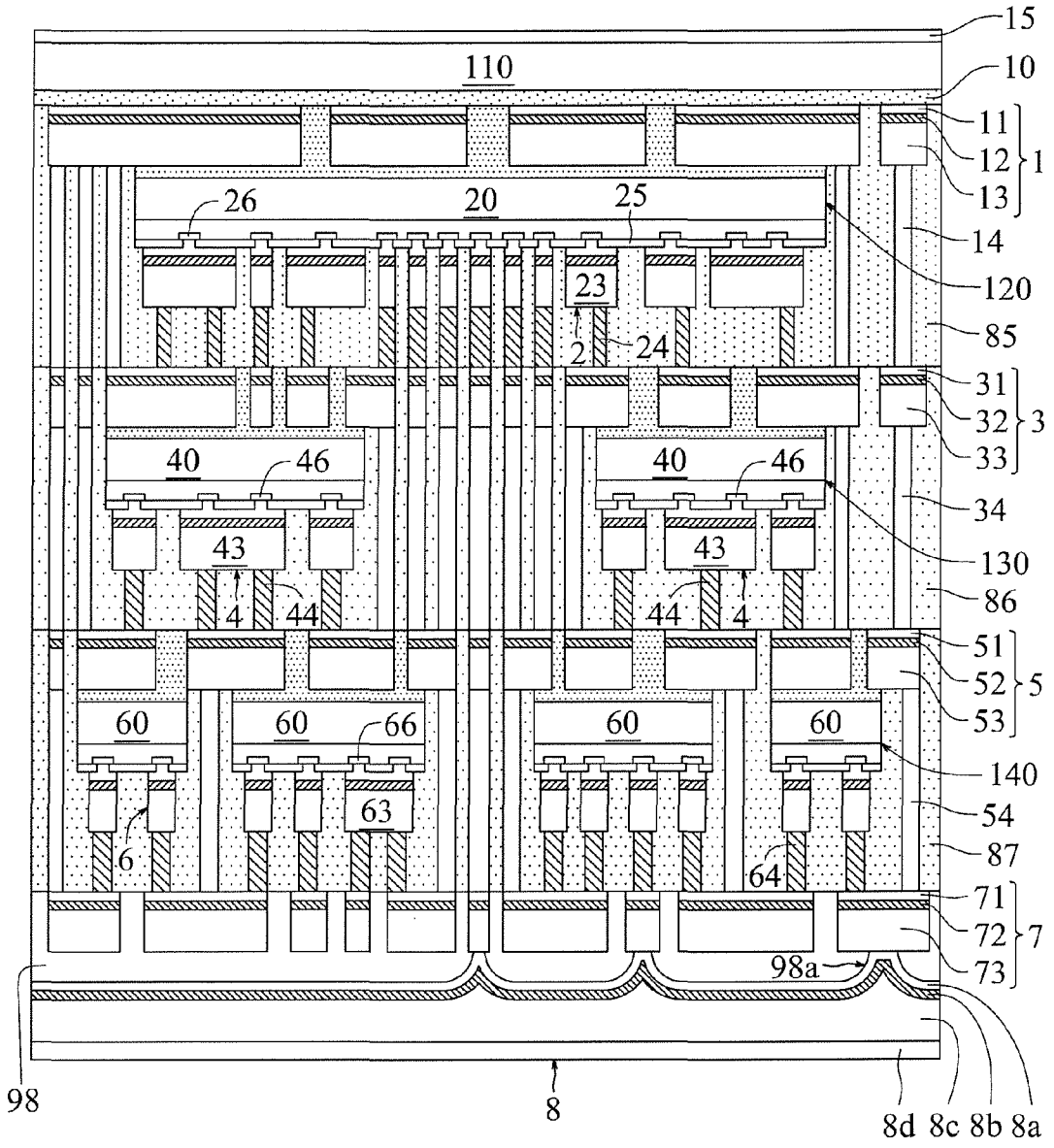
15
110
10
11
12
13
1
26
20
25
14
120
23
2
24
85
31
32
33
3
40
46
40
46
34
43
43
130
4
44
44
4
86
51
52
53
5
60
60
66
60
60
140
63
54
6
64
87
71
72
73
7
98a
98
8
8d
8c
8b
8a

Fig. 41

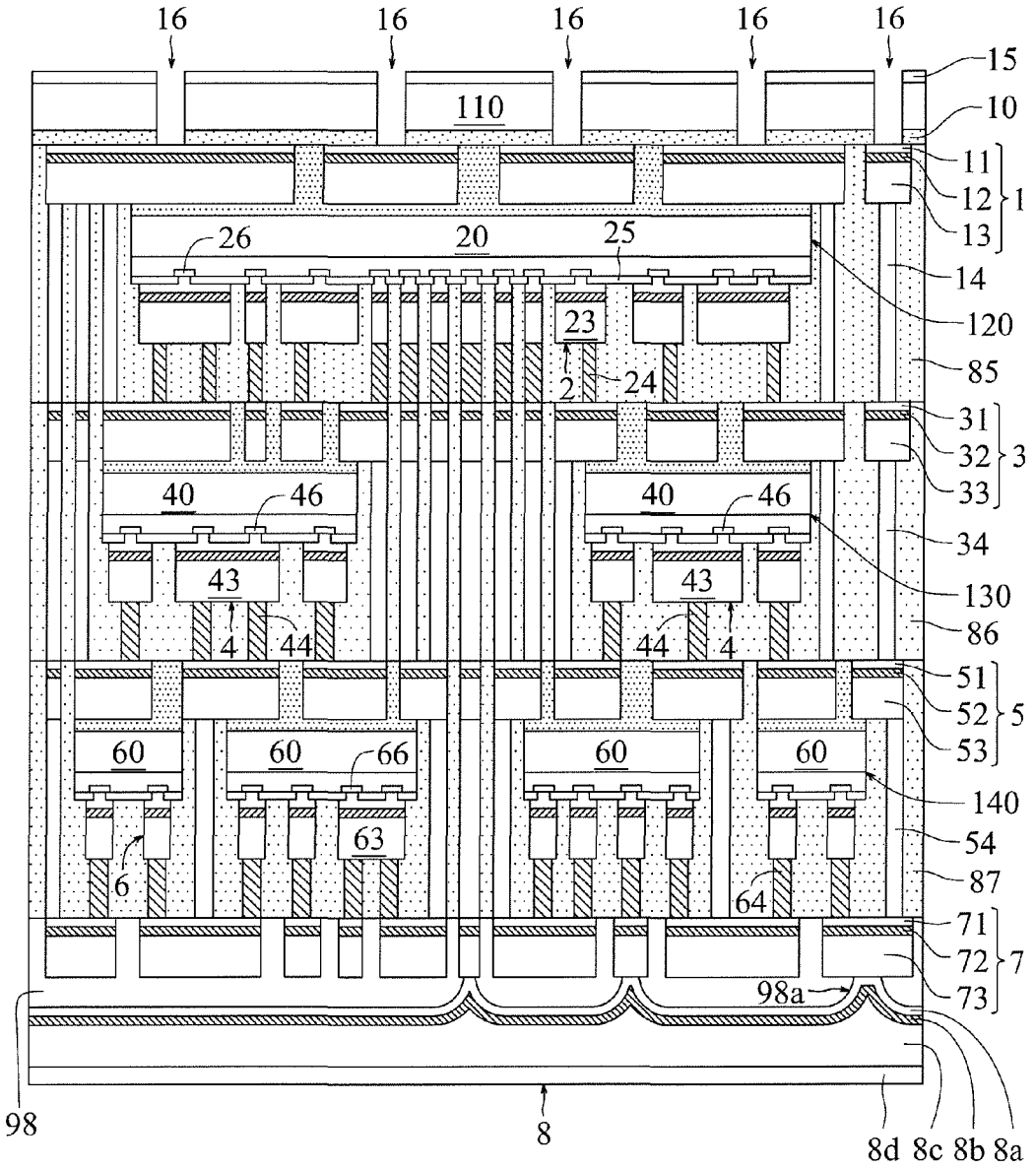
16
16
16
16
16
15
10
110
11
12
13
1
26
20
25
14
120
23
2
24
85
31
32
33
3
40
46
40
46
34
43
43
130
4
44
44
4
86
51
52
53
5
60
60
66
60
60
140
63
54
6
87
64
71
72
73
7
98a
98
8
8d
8c
8b
8a

Fig. 42

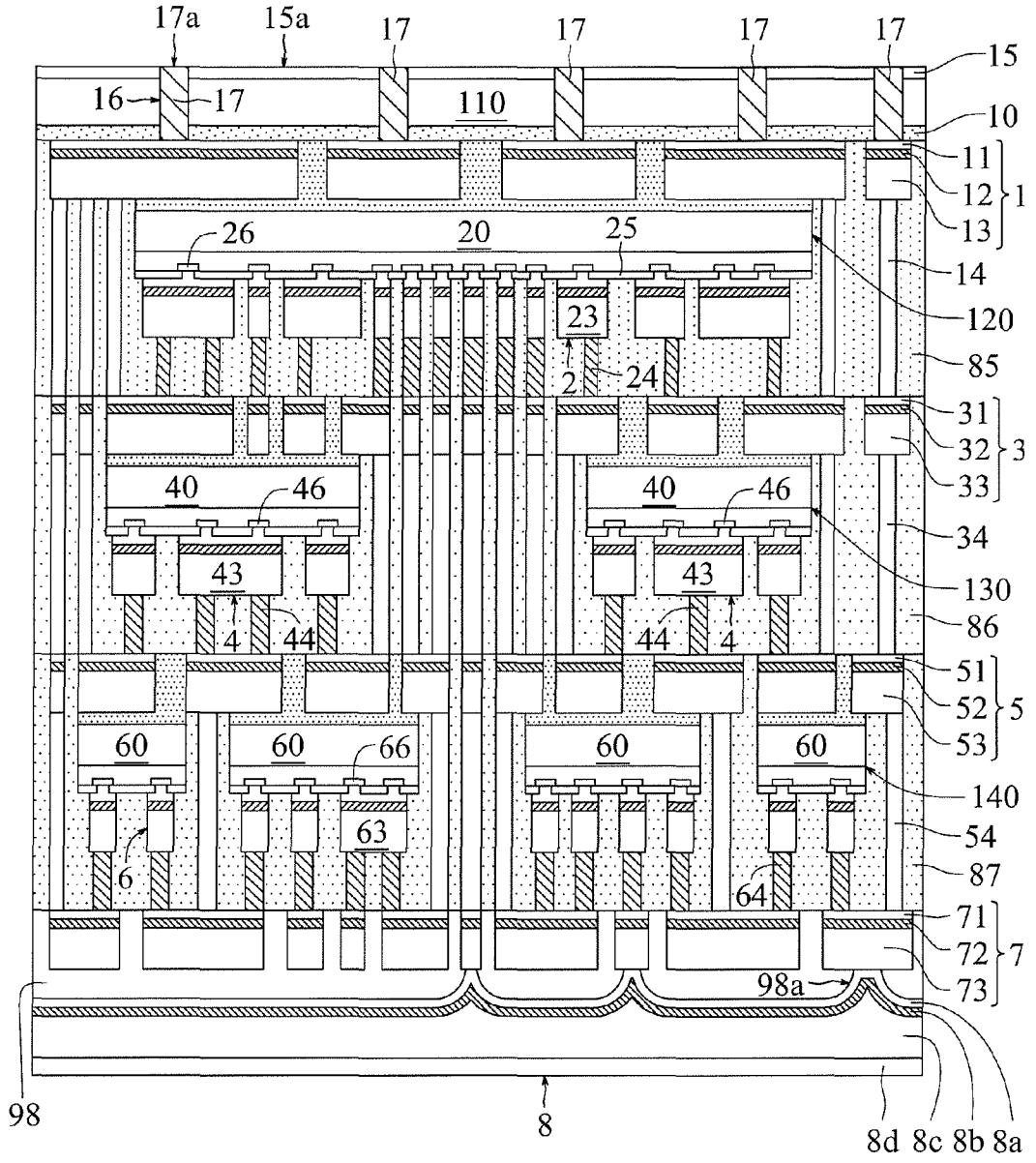
17a
15a
17
17
17
17
15
16
17
110
10
11
12
13
1
26
20
25
14
120
23
2
24
85
31
32
33
3
40
46
40
46
34
43
43
130
4
44
44
4
86
51
52
53
5
60
60
66
60
60
140
63
54
6
64
87
71
72
73
7
98a
98
8
8d
8c
8b
8a

Fig. 43

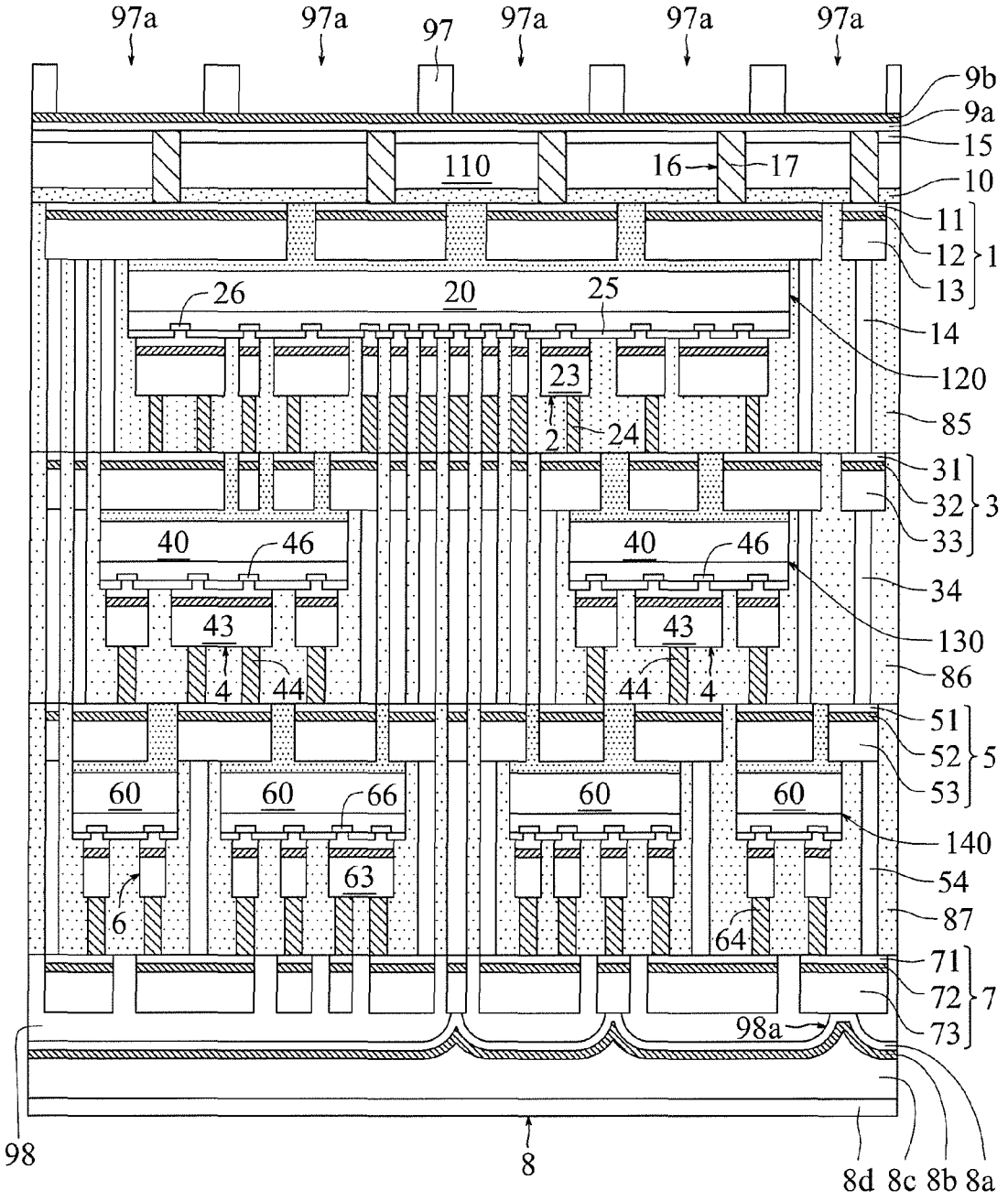
97a
97a
97
97a
97a
97a
9b
9a
15
110
16
17
10
11
12
13
1
26
20
25
14
120
23
2
24
85
31
32
33
3
40
46
40
46
34
43
43
130
4
44
44
4
86
51
52
53
5
60
60
66
60
60
140
63
54
6
64
87
71
72
73
7
98a
98
8
8d
8c
8b
8a

Fig. 44

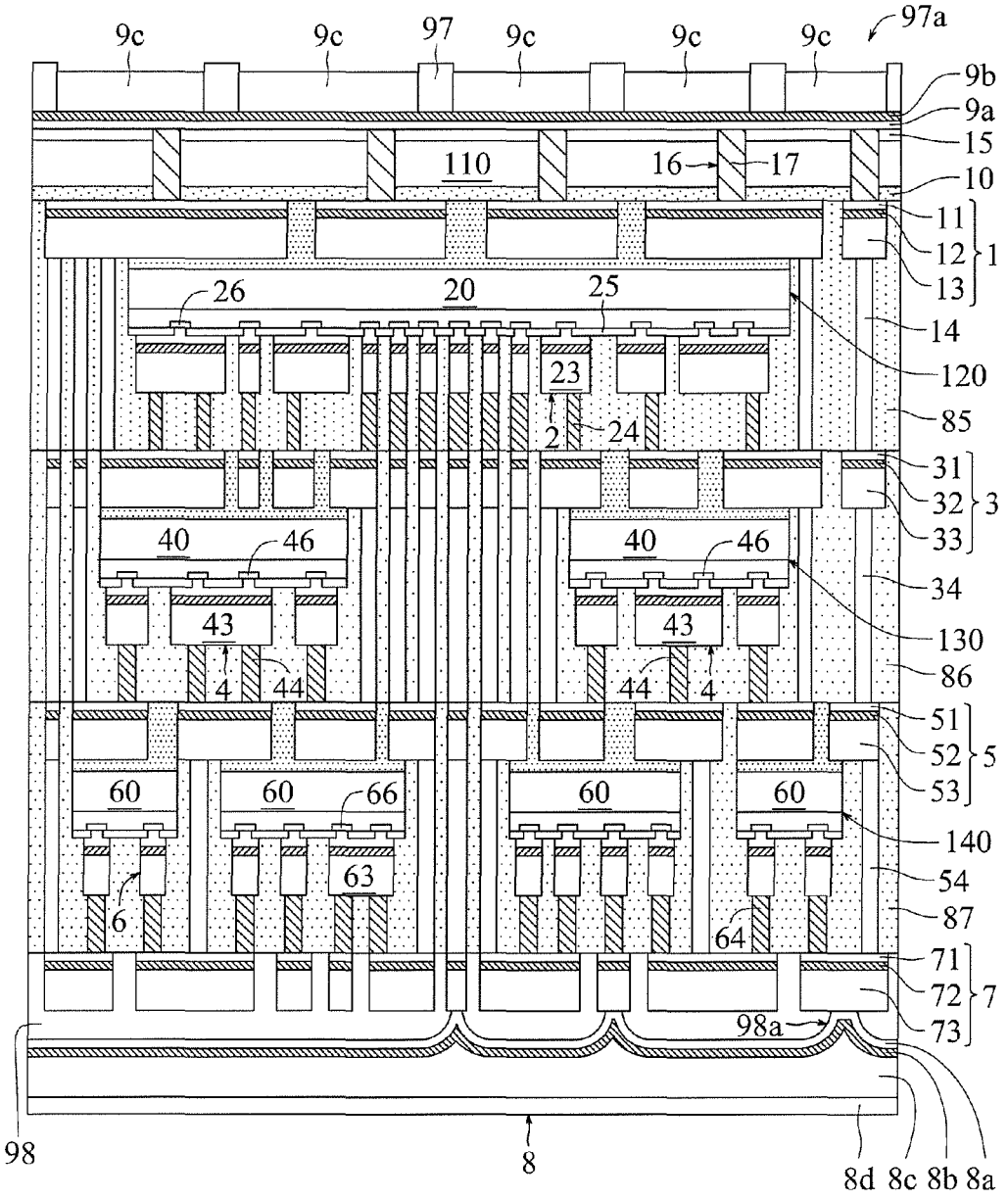
9c
9c
97
9c
9c
9c
97a
9b
9a
15
110
16
17
10
11
12
13
1
26
20
25
14
120
23
2
24
85
31
32
33
3
40
46
40
46
34
43
43
130
4
44
44
4
86
51
52
53
5
60
60
66
60
60
140
63
54
6
64
87
71
72
73
7
98a
98
8
8d
8c
8b
8a

Fig. 45

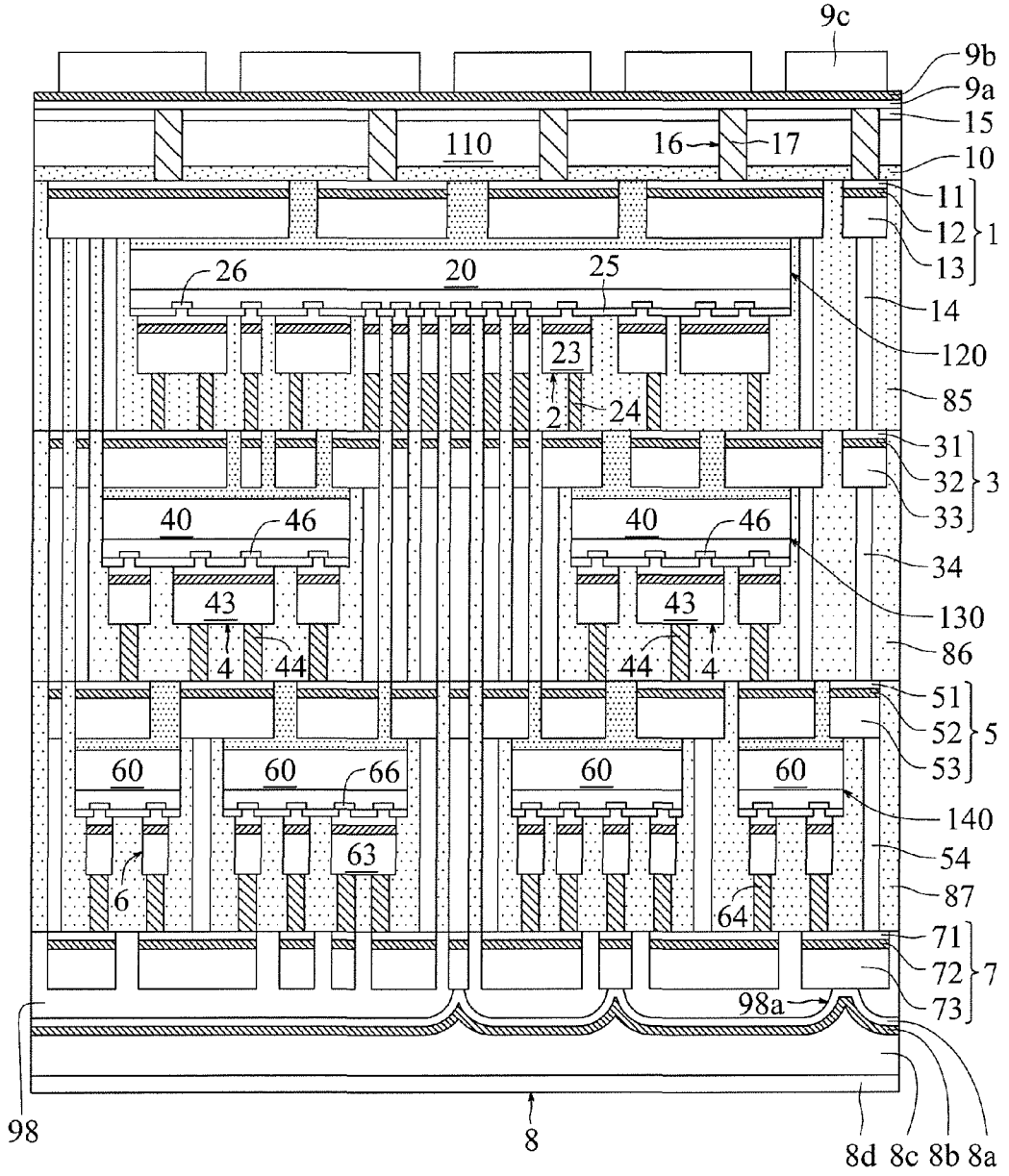
9c
9b
9a
15
110
16
17
10
11
12
13
1
26
20
25
14
120
23
2
24
85
31
32
33
3
40
46
40
46
34
43
43
130
4
44
44
4
86
51
52
53
5
60
60
66
60
60
140
63
54
6
64
87
71
72
73
7
98a
98
8
8d
8c
8b
8a

Fig. 46

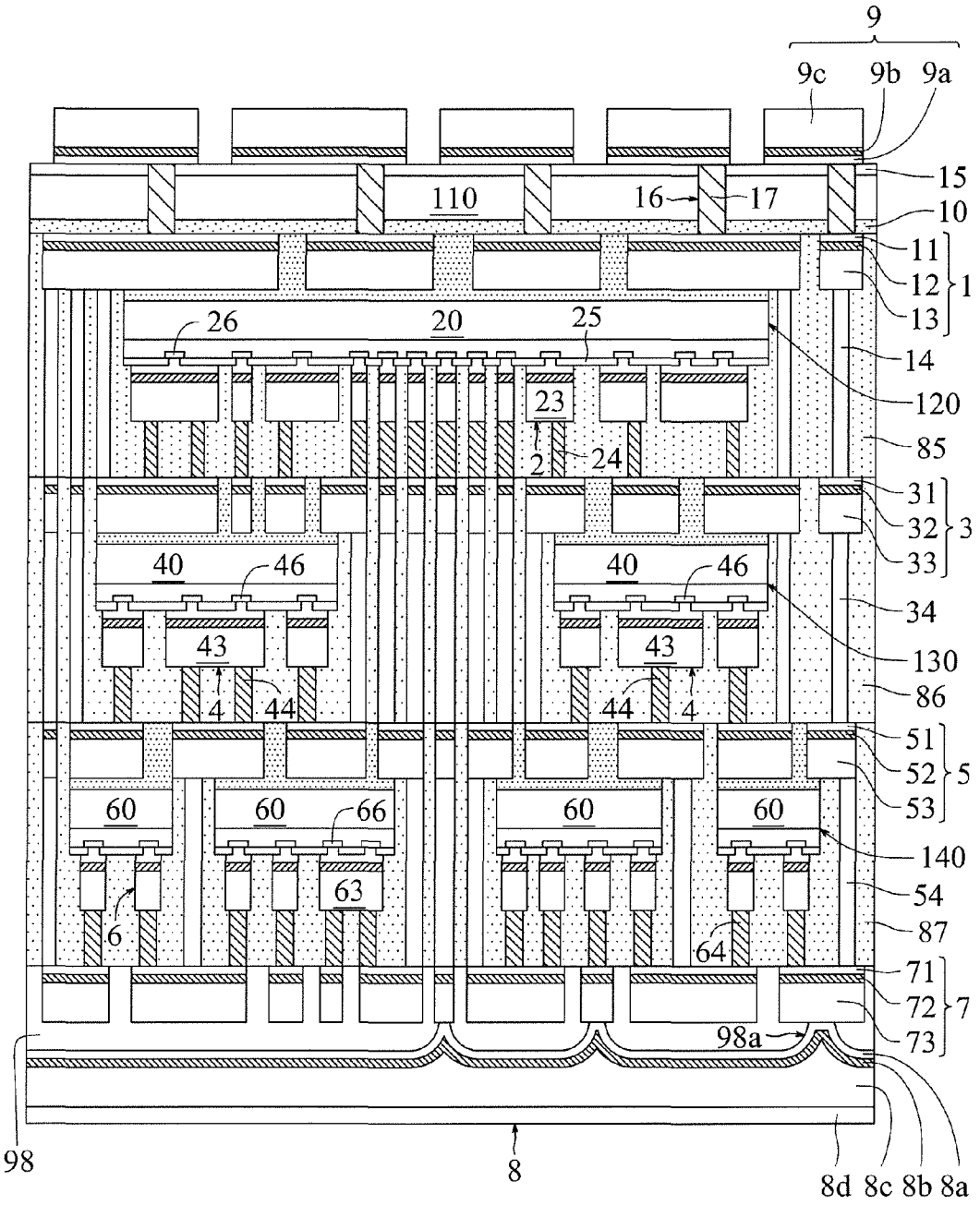
9
9c
9b
9a
15
110
16
17
10
11
12
1
13
26
20
25
14
120
23
2
24
85
31
32
3
33
40
46
40
46
34
43
43
130
4
44
44
4
86
51
52
5
53
60
60
66
60
60
140
63
54
6
87
64
71
72
7
73
98a
98
8
8d
8c
8b
8a

Fig. 47

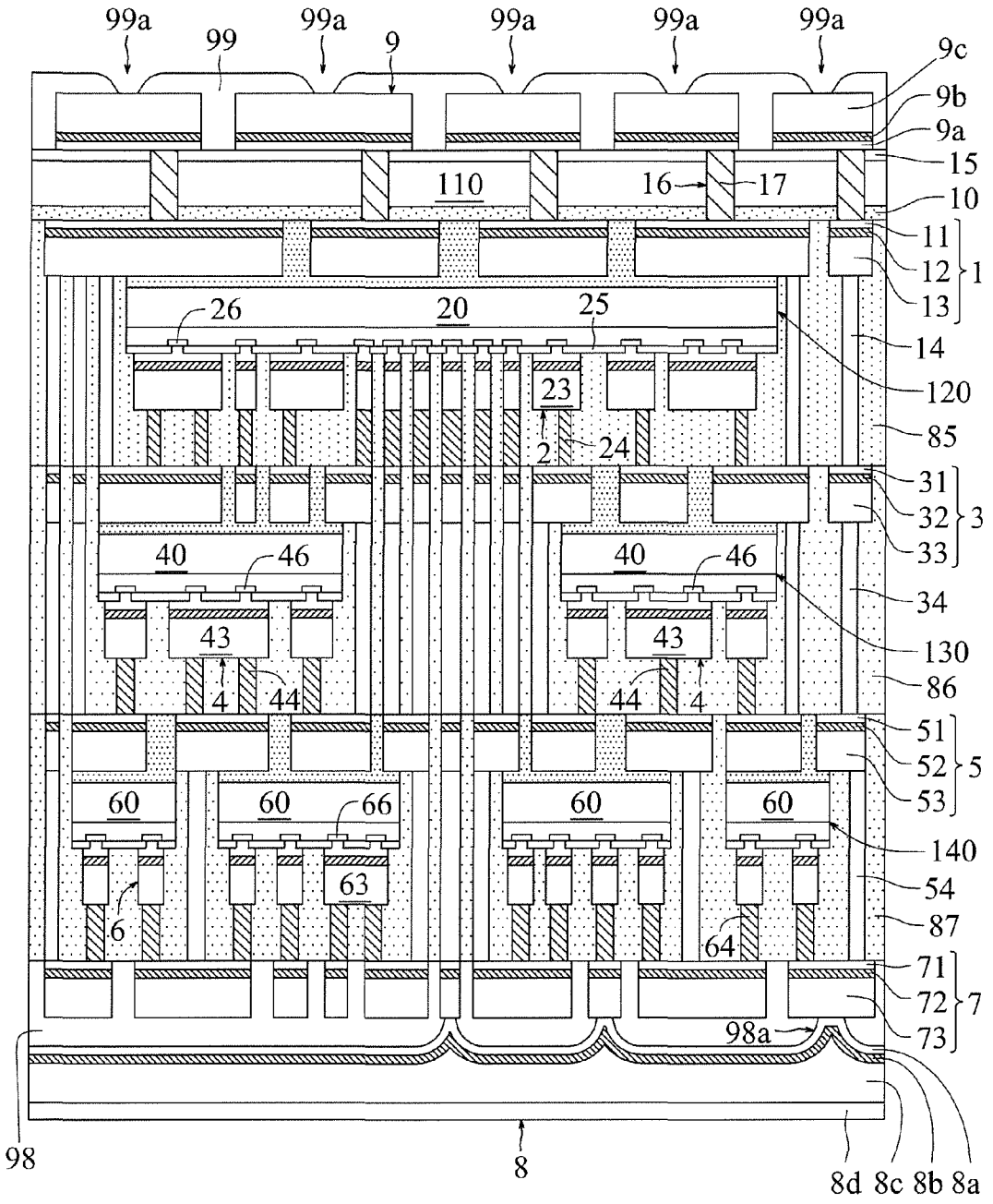
99a
99
99a
9
99a
99a
99a
9c
9b
9a
15
110
16
17
10
11
12
13
1
26
20
25
14
120
23
2
24
85
31
32
33
3
40
46
40
46
34
43
43
130
4
44
44
4
86
51
52
53
5
60
60
66
60
60
140
63
54
6
64
87
71
72
73
7
98a
98
8
8d
8c
8b
8a

Fig. 48

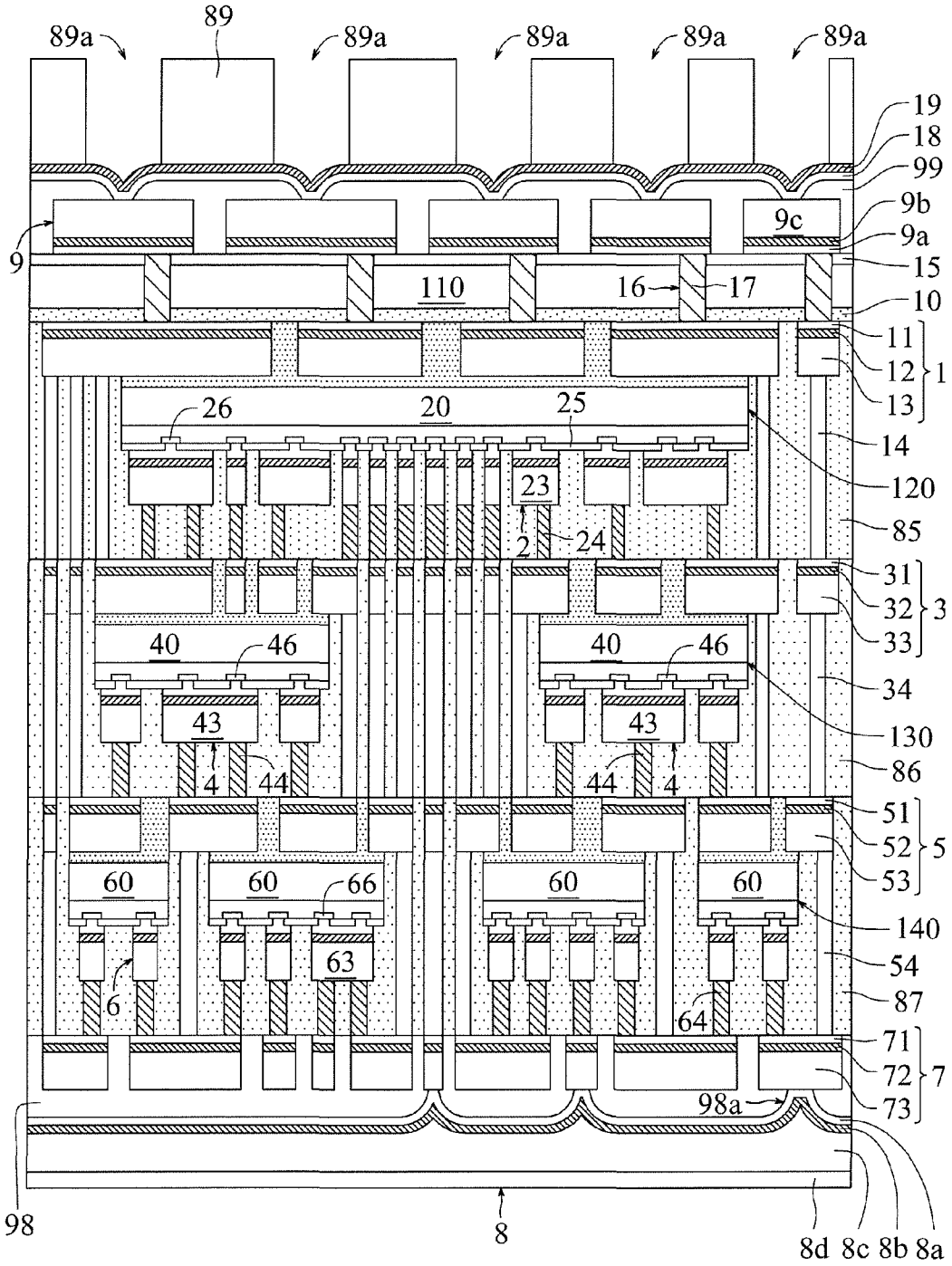
89a
89
89a
89a
89a
89a
19
18
99
9b
9c
9a
9
15
110
16
17
10
11
12
1
13
26
20
25
14
120
23
2
24
85
31
32
3
33
40
46
40
46
34
43
43
130
4
44
44
4
86
51
52
5
53
60
60
66
60
60
140
63
54
6
87
64
71
72
7
73
98a
98
8
8d
8c
8b
8a

Fig. 49

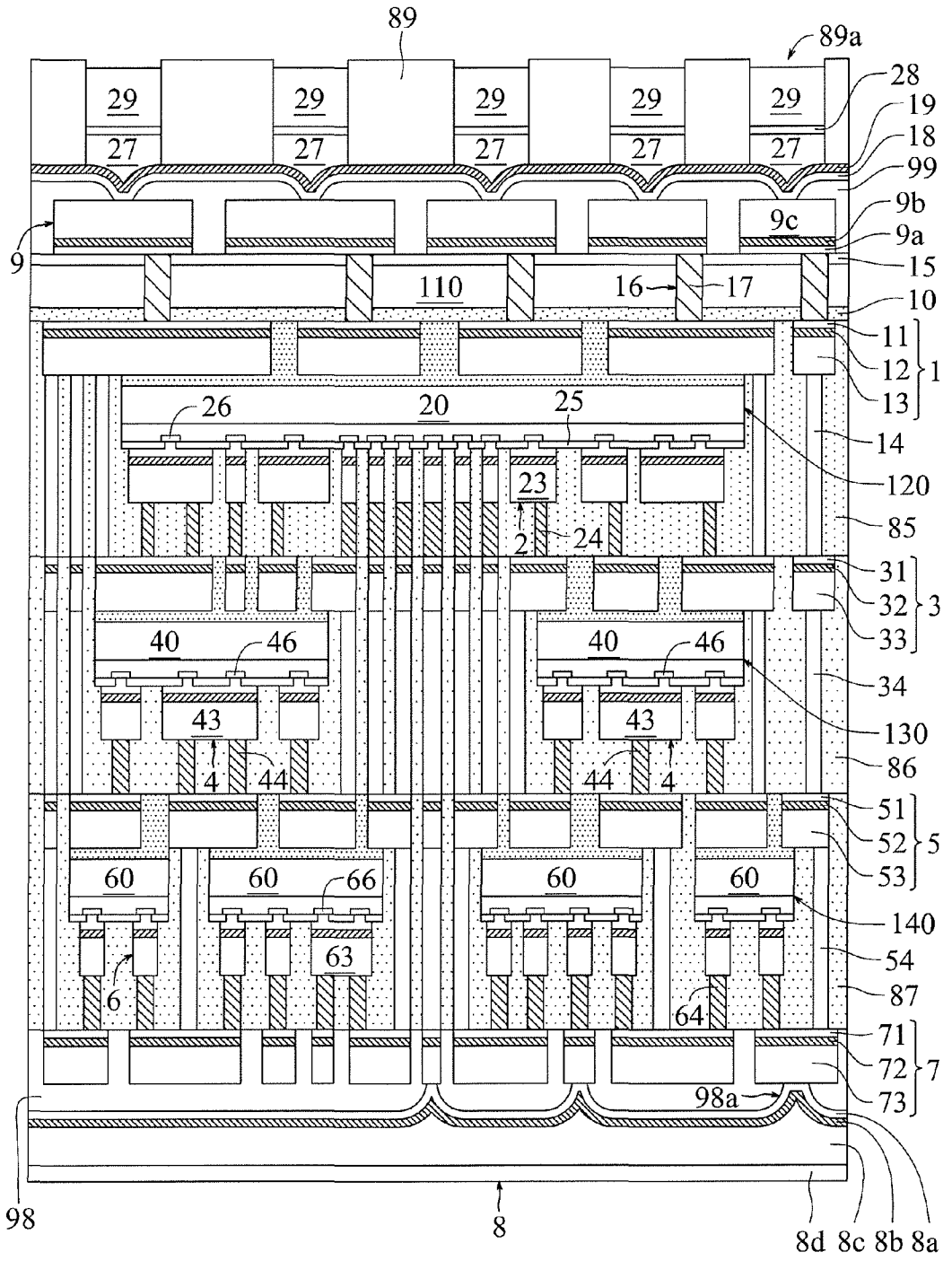
89
89a
28
19
18
99
29
27
9b
9c
9a
9
15
110
16
17
10
11
12
13
1
26
20
25
14
120
23
2
24
85
31
32
33
3
40
46
34
130
43
4
44
86
51
52
53
5
60
66
140
63
54
6
64
87
71
72
73
7
98a
98
8
8d
8c
8b
8a

Fig. 50

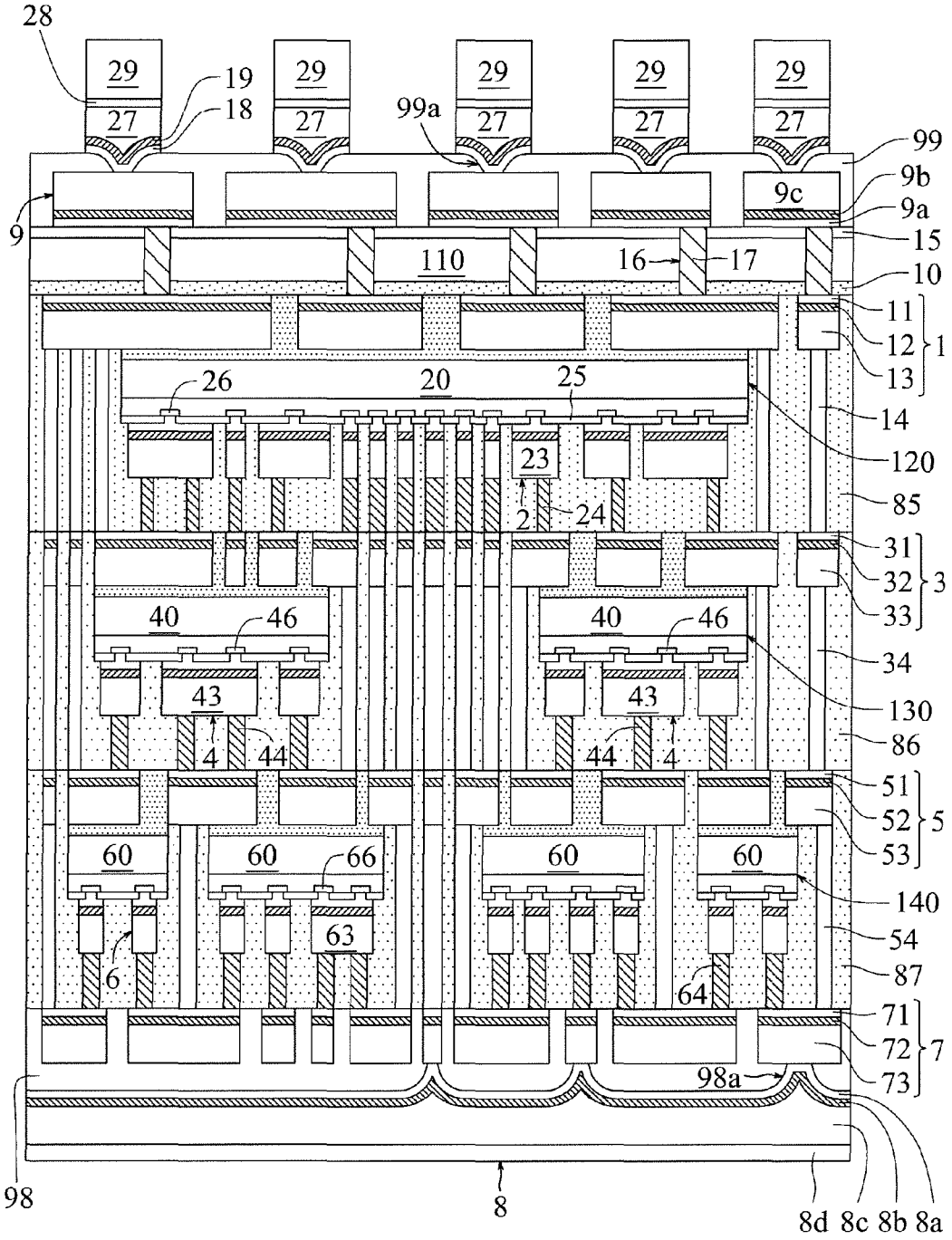
28
29
27
19
18
99a
99
9b
9c
9a
9
15
110
16
17
10
11
12
13
1
26
20
25
14
120
23
2
24
85
31
32
33
3
40
46
34
43
130
4
44
86
51
52
53
5
60
66
140
63
54
6
87
64
71
72
73
7
98a
98
8
8d
8c
8b
8a

Fig. 51

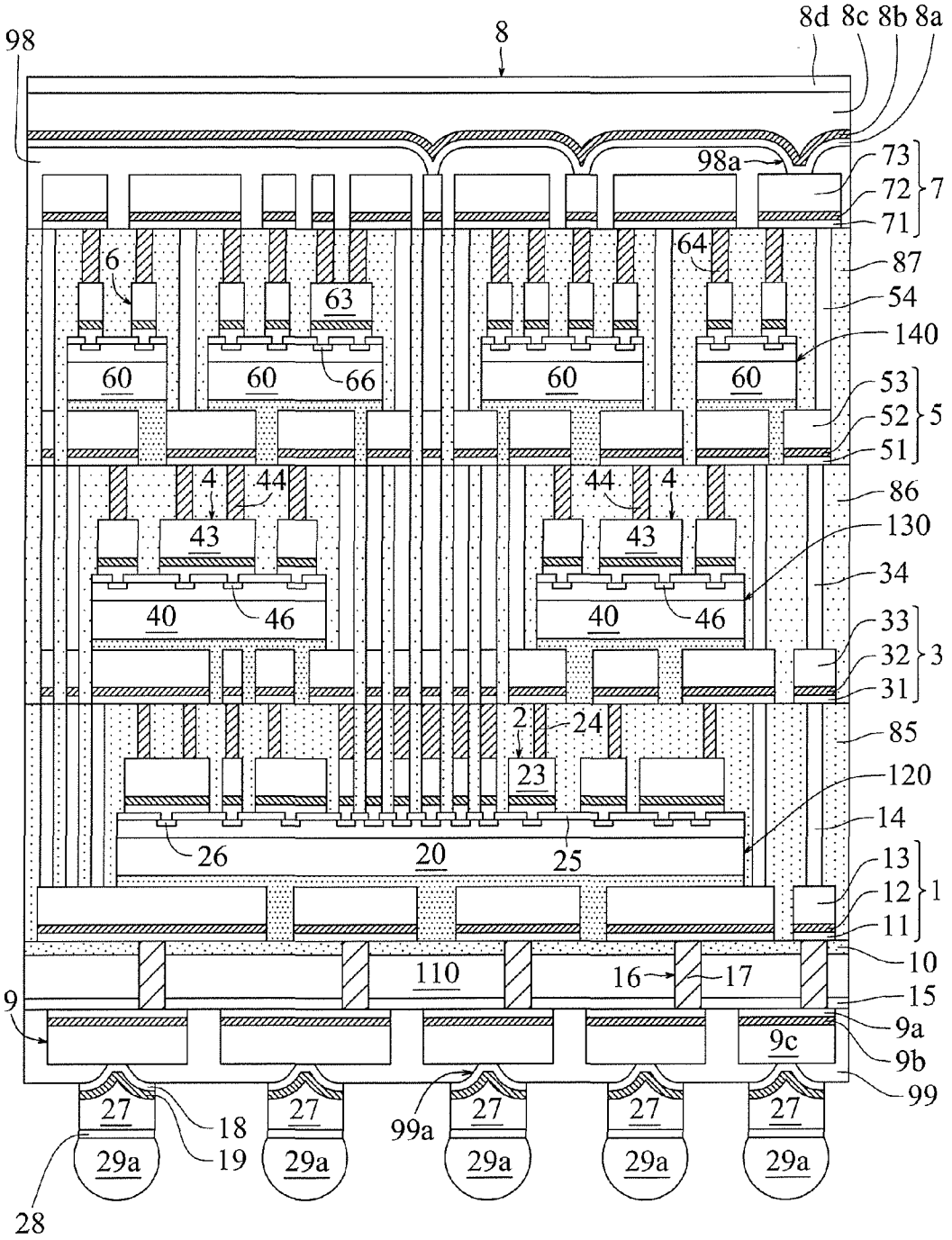
98
8
8d 8c 8b 8a
98a
73
72
71
7
6
64
87
63
54
140
60
60
66
60
60
53
52
51
5
4
44
44
4
86
43
43
130
34
40
46
40
46
33
32
31
3
2
24
85
23
120
14
26
20
25
13
12
11
1
10
110
16
17
15
9
9a
9c
9b
99
27
27
27
27
27
18
19
99a
29a
29a
29a
29a
29a
28

Fig. 52

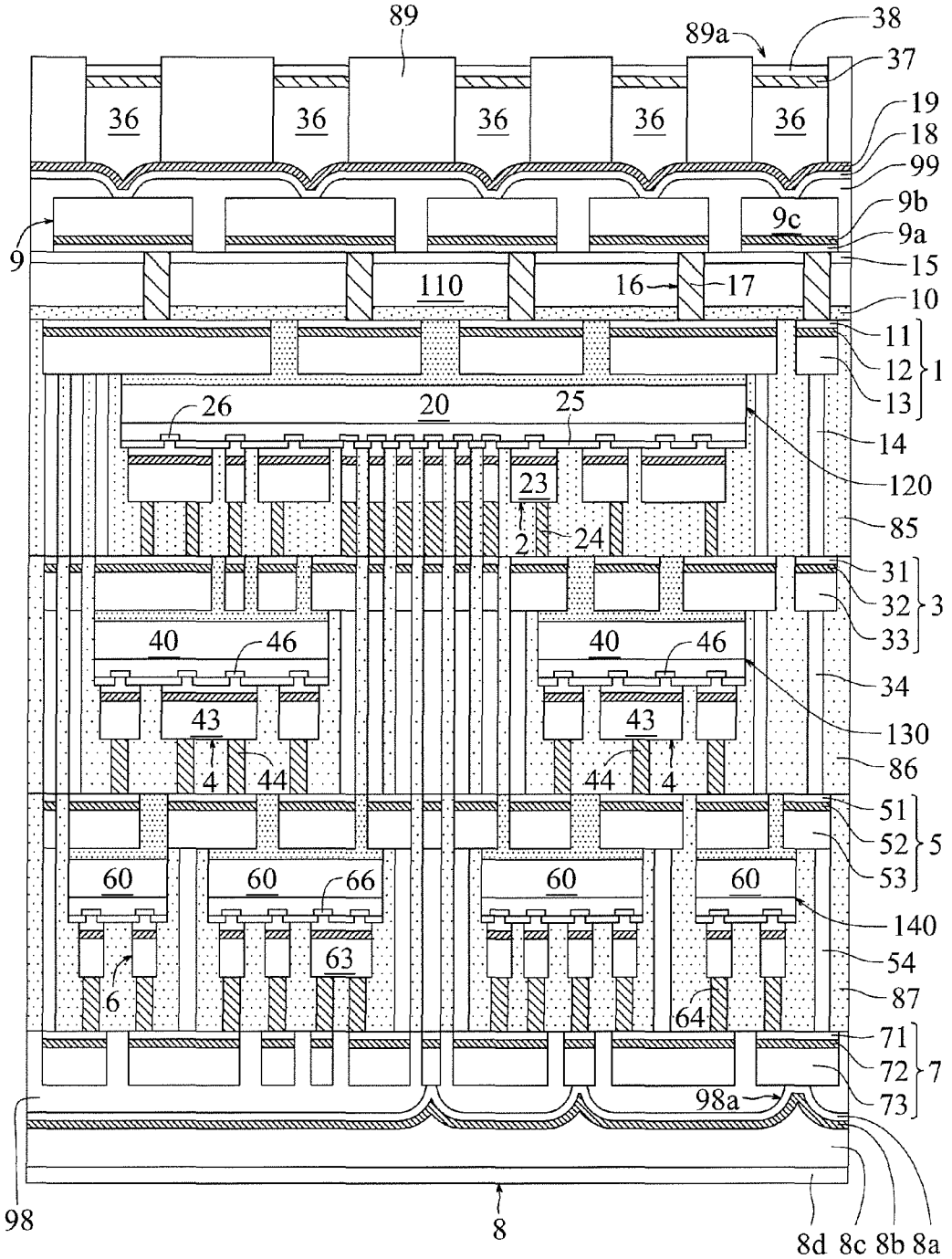
89
89a
38
37
36
36
36
36
36
19
18
99
9b
9c
9a
9
15
110
16
17
10
11
12
1
13
26
20
25
14
120
23
85
2
24
31
32
3
33
40
46
40
46
34
43
43
130
4
44
44
4
86
51
52
5
53
60
60
66
60
60
140
63
54
6
87
64
71
72
7
73
98a
98
8
8d
8c
8b
8a

Fig. 53

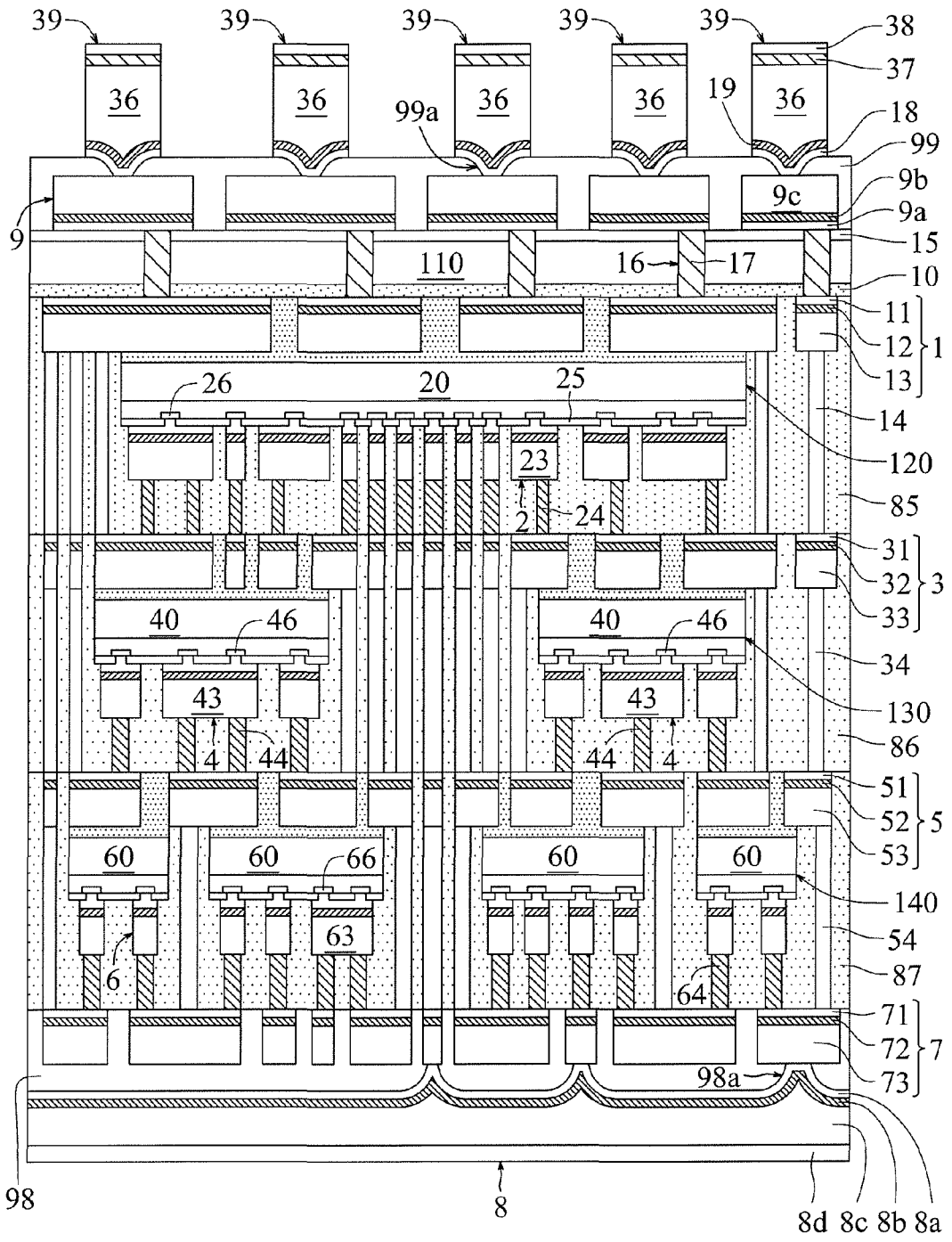
39
39
39
39
39
38
37
36
36
36
36
36
19
18
99a
99
9b
9c
9a
9
15
110
16
17
10
11
12
1
13
26
20
25
14
120
23
85
2
24
31
32
3
33
40
46
40
46
34
43
43
130
4
44
44
4
86
51
52
5
53
60
60
66
60
60
140
63
54
6
87
64
71
72
7
73
98a
98
8
8d
8c
8b
8a

Fig. 54

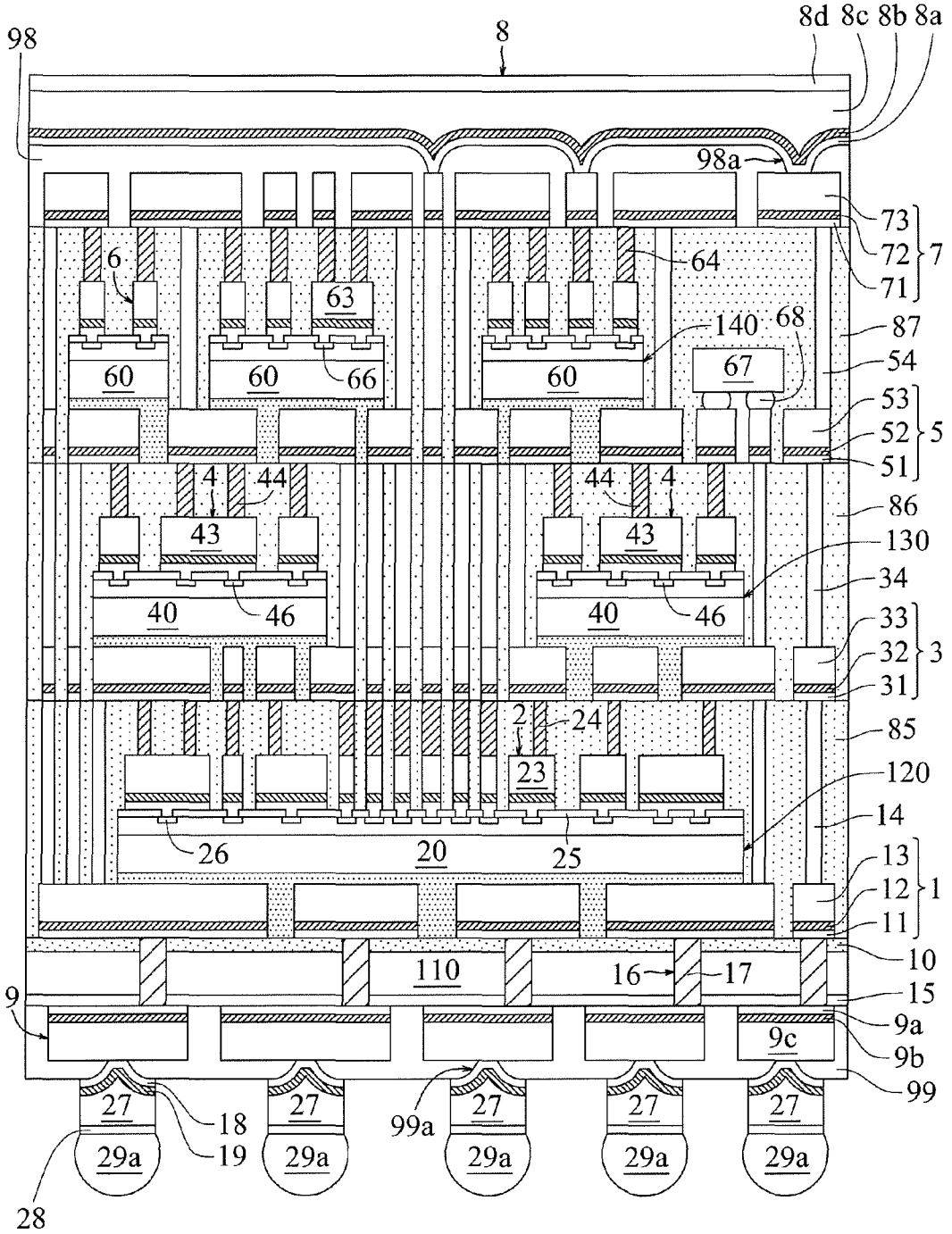
98
8
8d 8c 8b 8a
98a
73
72
71
7
6
64
63
140
68
87
60
60
66
60
67
54
53
52
5
51
4
44
44
4
86
43
43
130
34
40
46
40
46
33
32
3
31
2
24
85
23
120
14
26
20
25
13
12
1
11
10
110
16
17
9
15
9a
9c
9b
99
27
27
99a
27
27
27
18
19
29a
29a
29a
29a
29a
28

Fig. 55

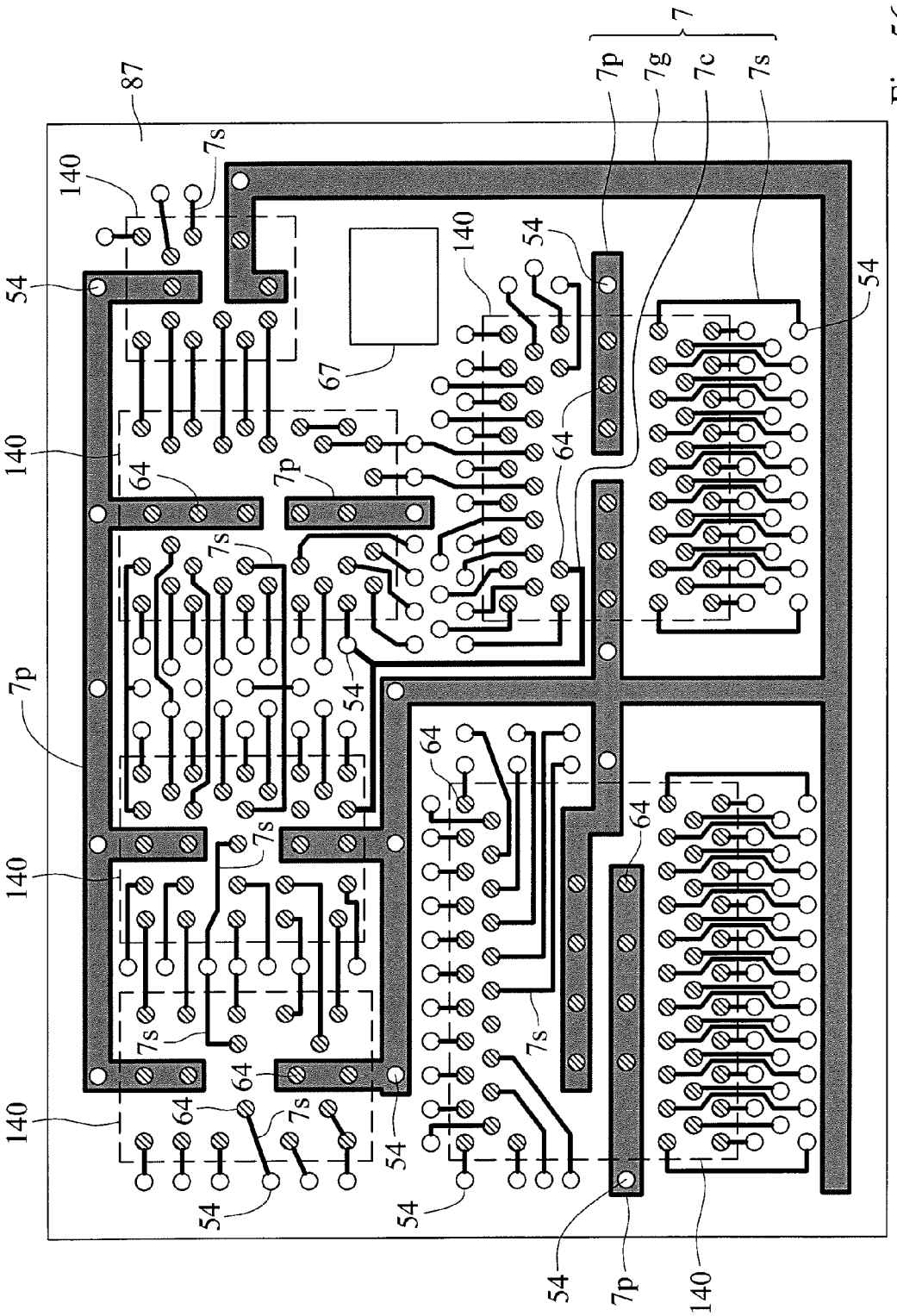

Fig. 56

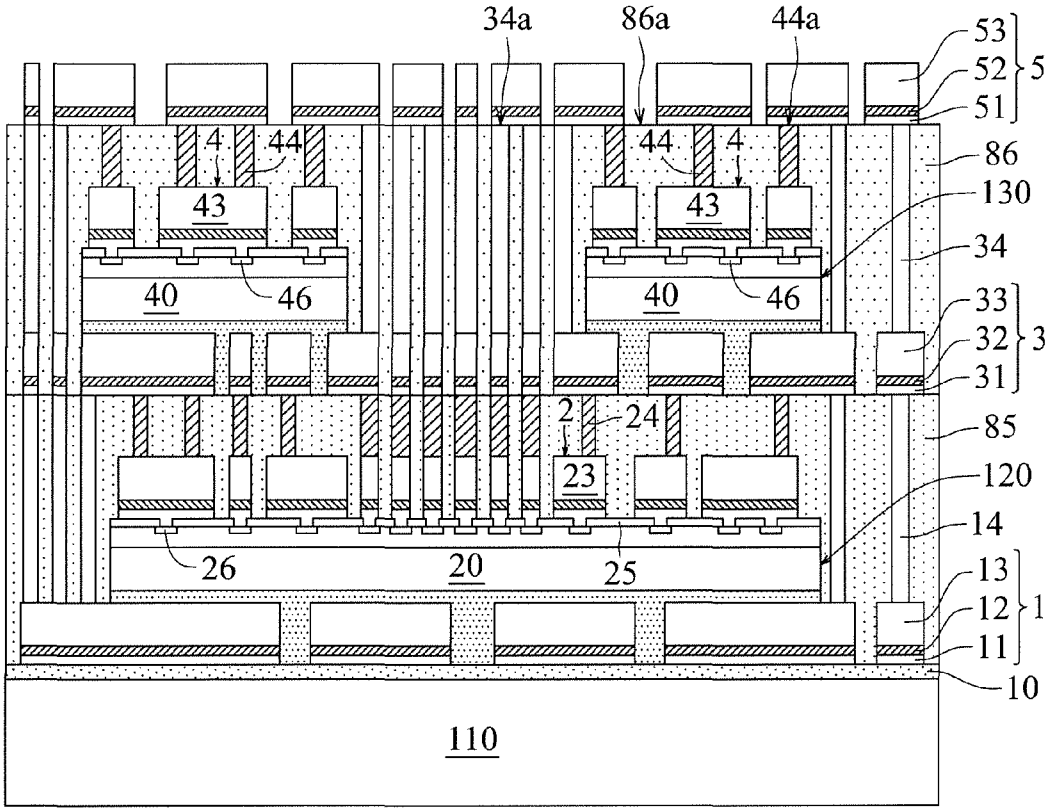
34a
86a
44a
53
52
51
5
4
44
44
4
86
43
43
130
34
40
46
40
46
33
32
31
3
2
24
85
23
120
14
26
20
25
13
12
11
1
10
110

Fig. 57

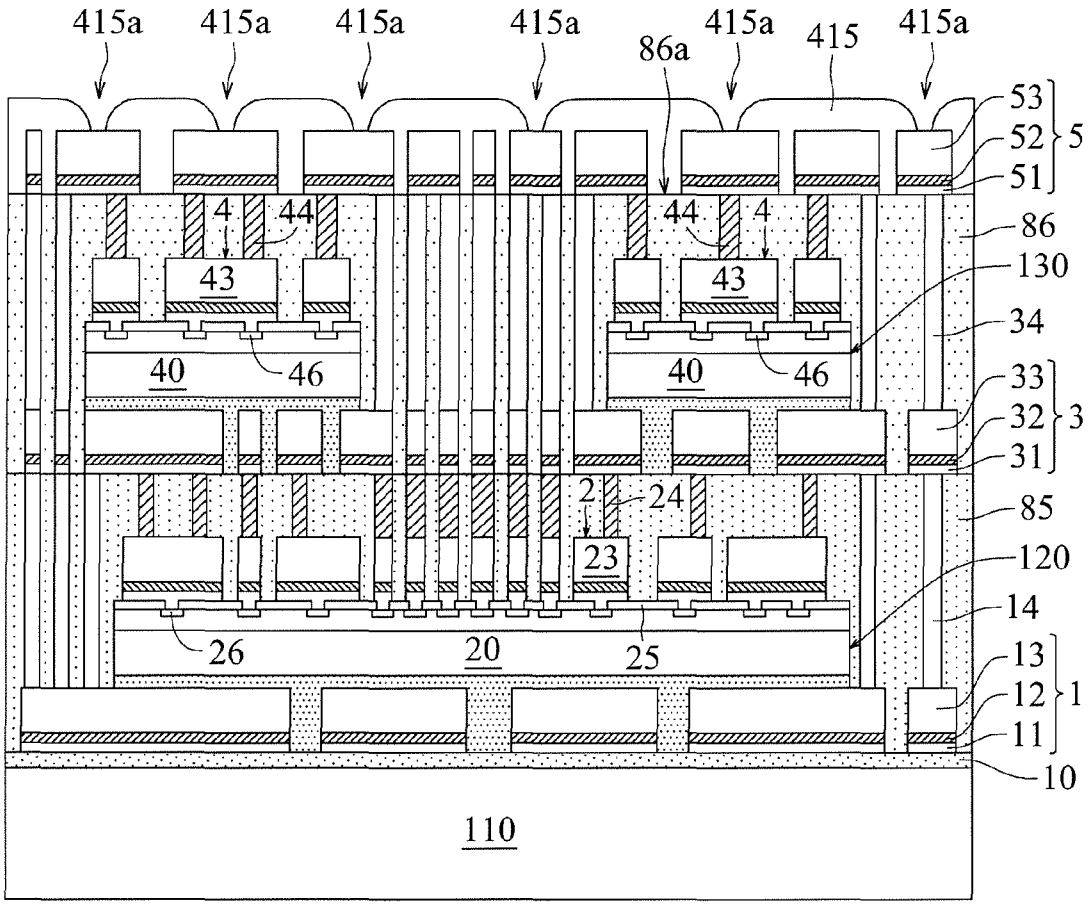
415a
415a
415a
415a
86a
415a
415
415a
53
52
51
5
4
44
44
4
86
43
43
130
34
40
46
40
46
33
32
31
3
2
24
85
23
120
14
26
20
25
13
12
11
1
10
110

Fig. 58

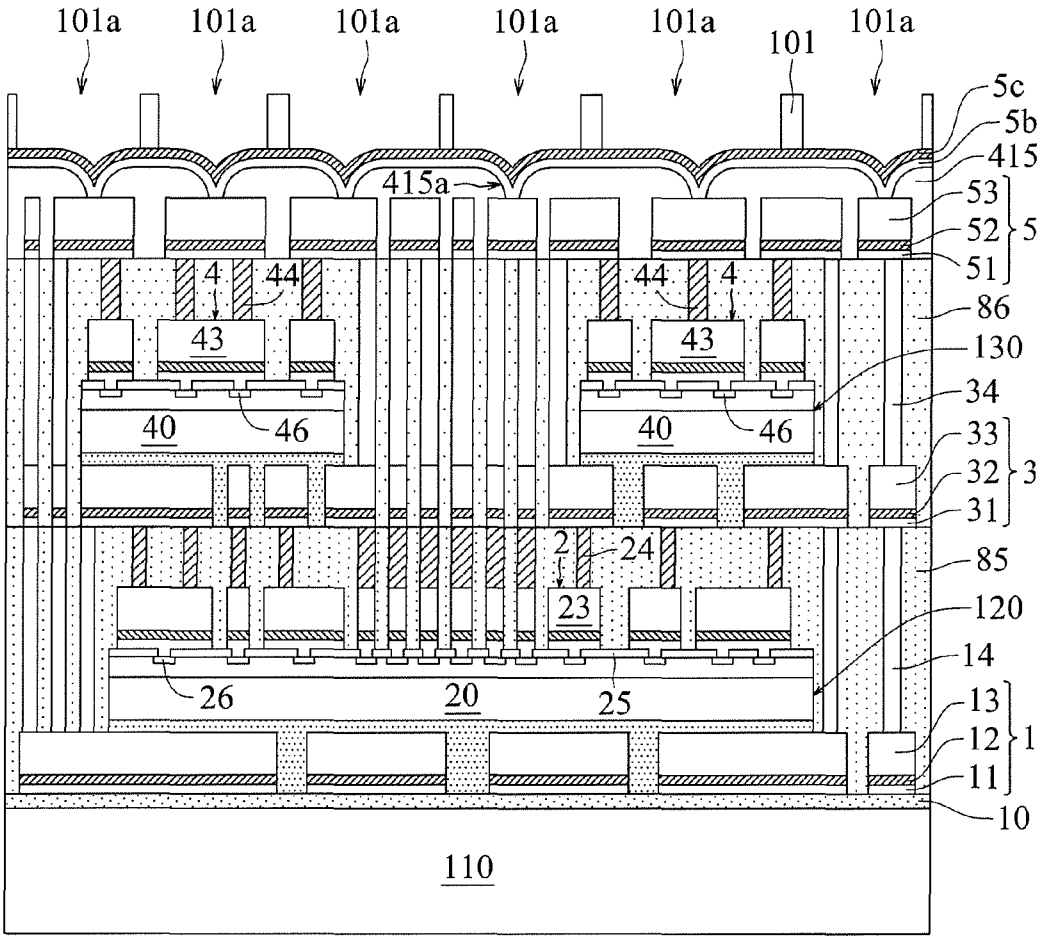
101a
101a
101a
101a
101a
101
101a
5c
5b
415
415a
53
52
5
51
4
44
44
4
86
43
43
130
34
40
46
40
46
33
32
3
31
2
24
85
23
120
14
26
20
25
13
12
1
11
10
110

Fig. 59

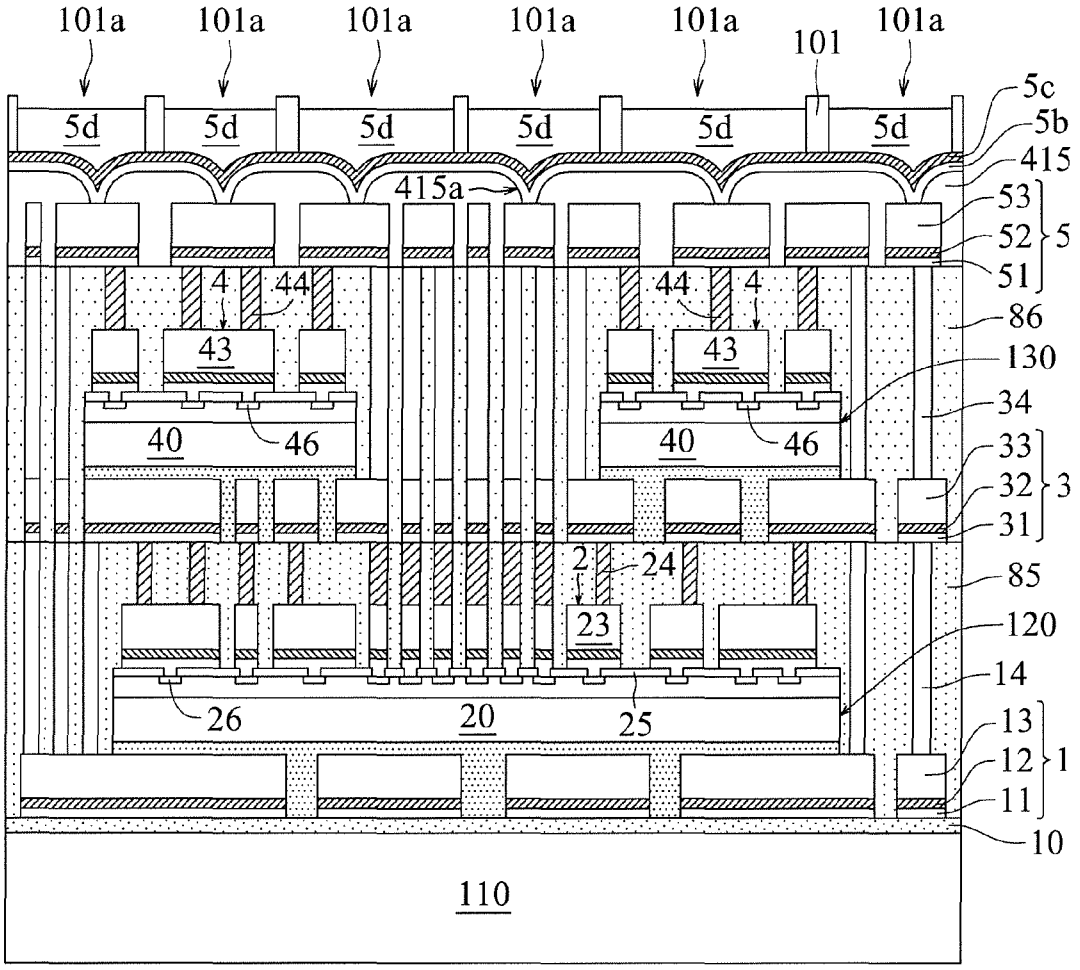
101a
101a
101a
101a
101a
101
101a
5c
5b
415
5d
5d
5d
5d
5d
5d
415a
53
52
5
51
4
44
44
4
86
43
43
130
34
40
46
40
46
33
32
3
31
2
24
85
23
120
14
26
20
25
13
12
1
11
10
110

Fig. 60

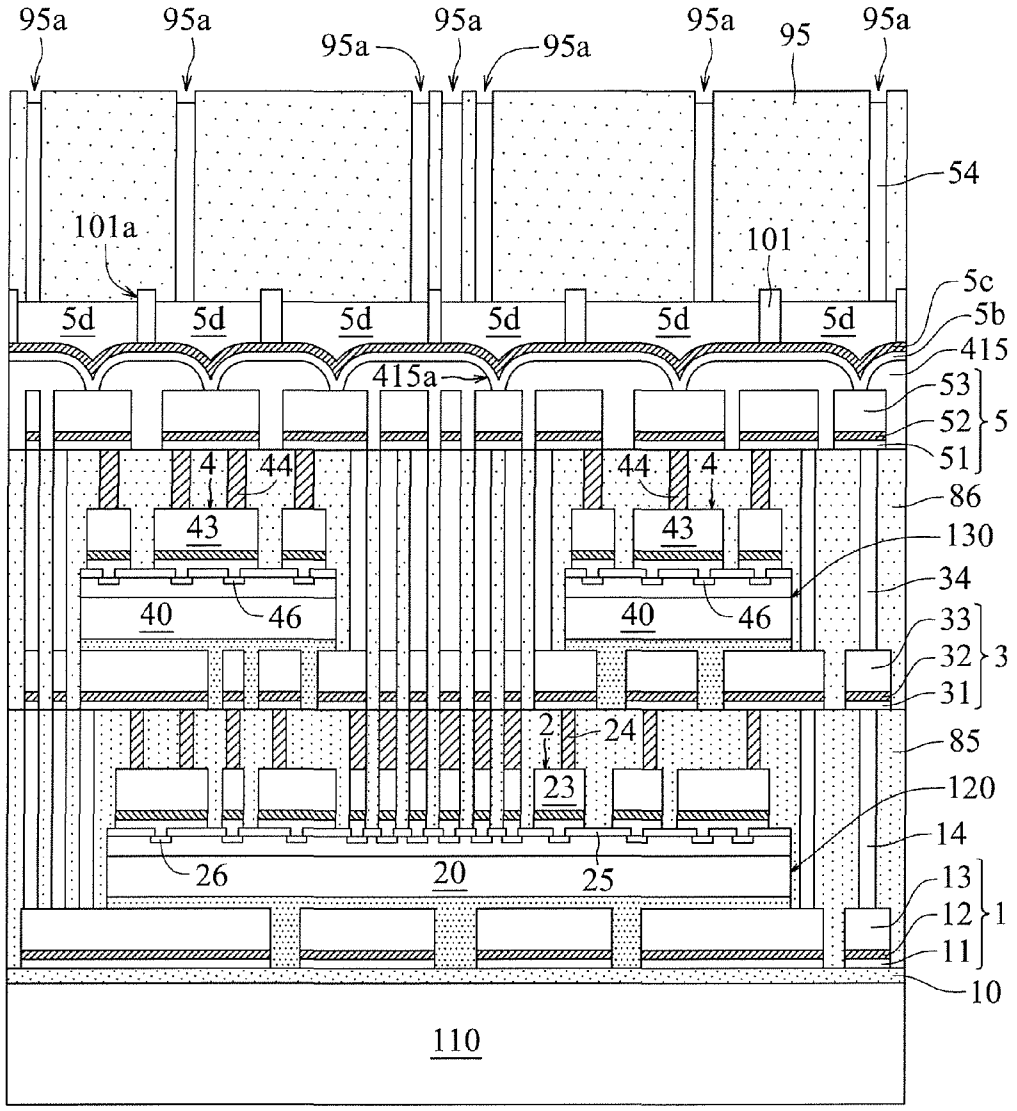
95a
95a
95a
95a
95a
95a
95
95a
54
101a
101
5c
5b
5d
5d
5d
5d
5d
5d
415
415a
53
52
5
51
4
44
44
4
86
43
43
130
34
40
46
40
46
33
32
3
31
2
24
85
23
120
14
26
20
25
13
12
1
11
10
110

Fig. 61

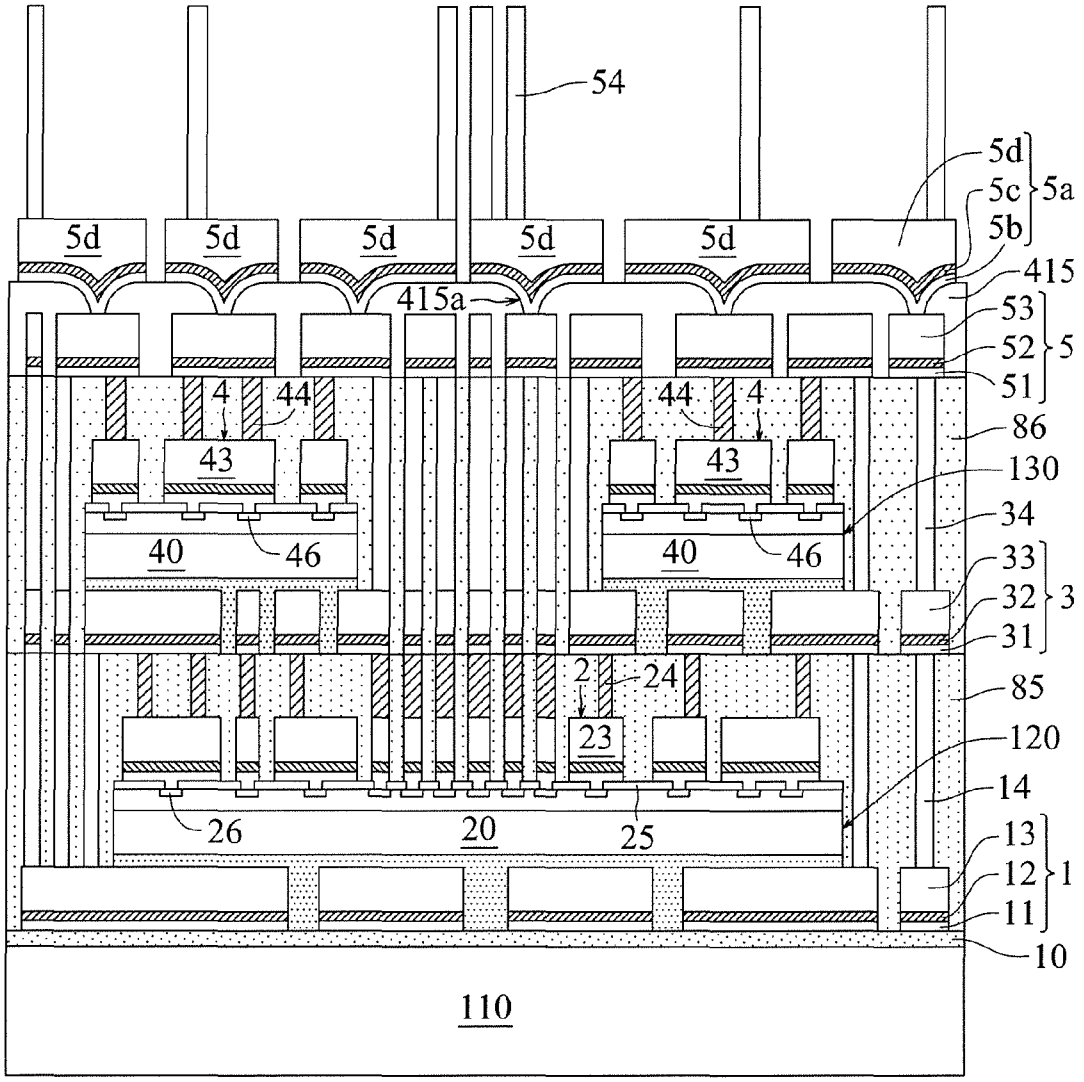
54
5d
5c
5b
5a
5d
5d
5d
5d
5d
415
415a
53
52
5
51
4
44
44
4
86
43
43
130
34
40
46
40
46
33
32
3
31
2
24
85
23
120
14
26
20
25
13
12
1
11
10
110

Fig. 62

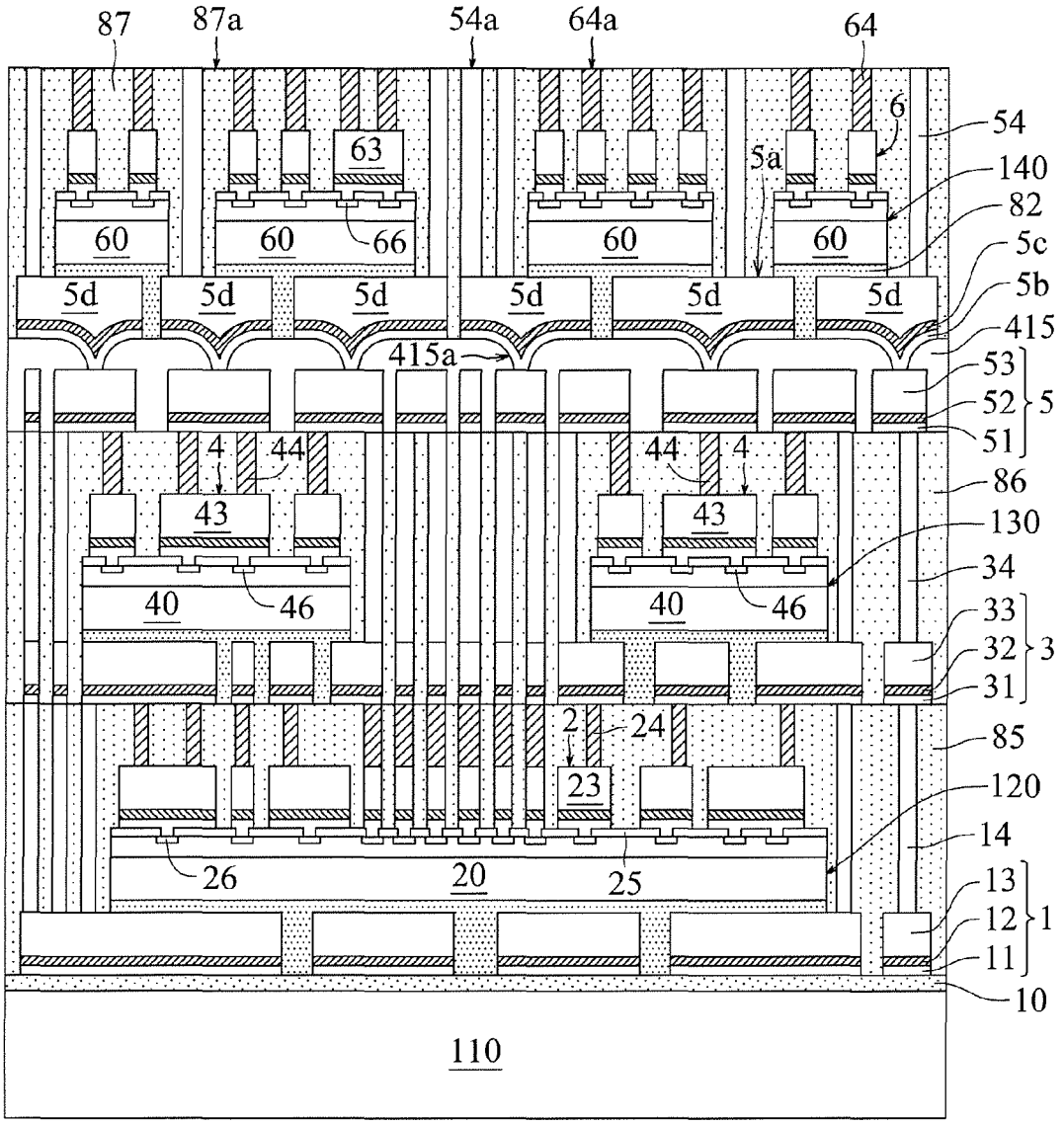
87
87a
54a
64a
64
6
54
140
82
5c
5b
415
53
52
51
5
5a
63
60
66
5d
415a
4
44
43
86
130
34
40
46
33
32
31
3
2
24
85
23
120
14
26
20
25
13
12
11
1
10
110

Fig. 63

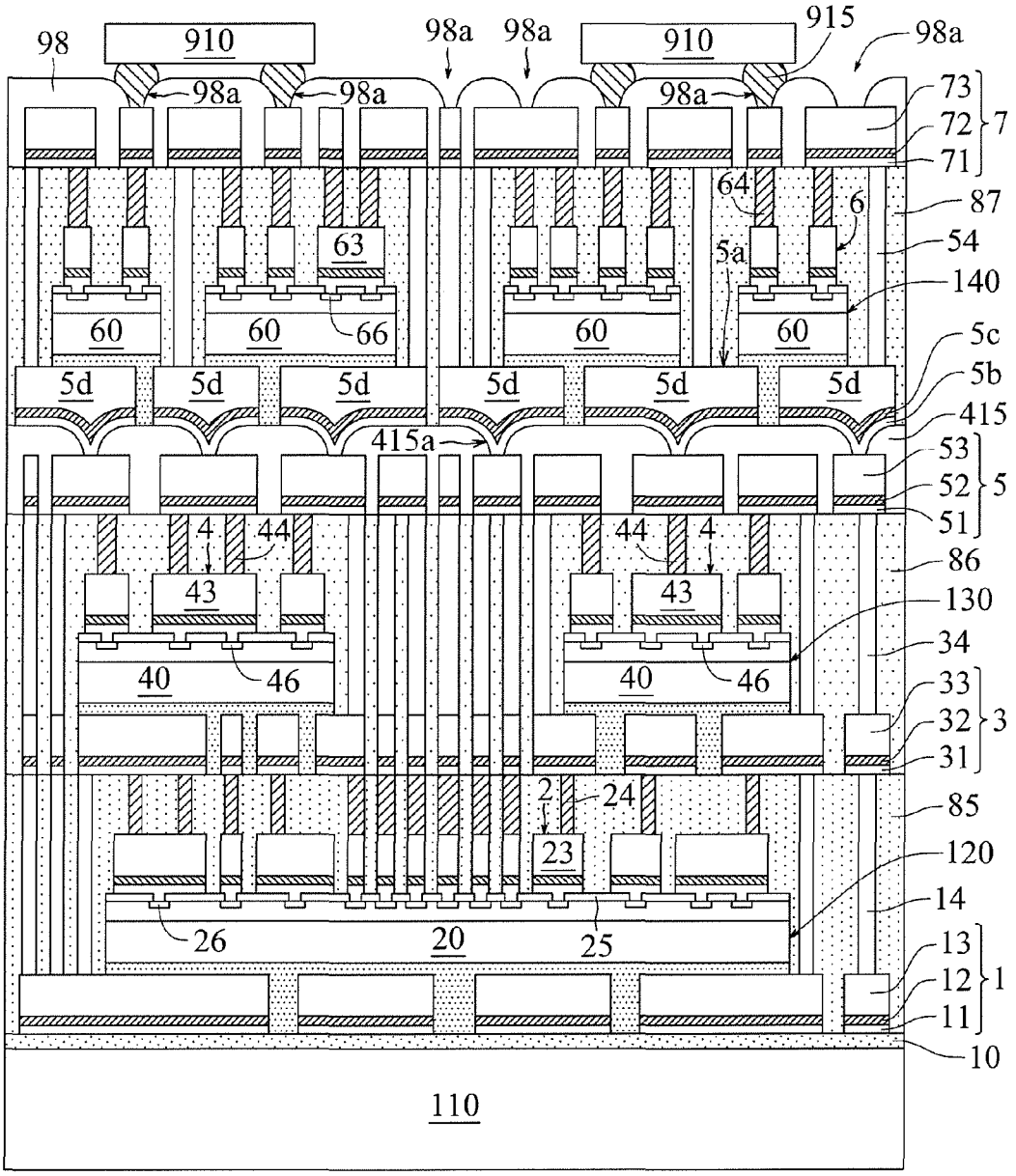
98
910
98a
98a
98a
910
915
98a
98a
98a
73
72
7
71
64
6
87
63
5a
54
140
60
60
66
60
60
5c
5d
5d
5d
5d
5d
5d
5b
415
415a
53
52
5
51
4
44
44
4
86
43
43
130
34
40
46
40
46
33
32
3
31
2
24
85
23
120
14
26
20
25
13
12
1
11
10
110

Fig. 64

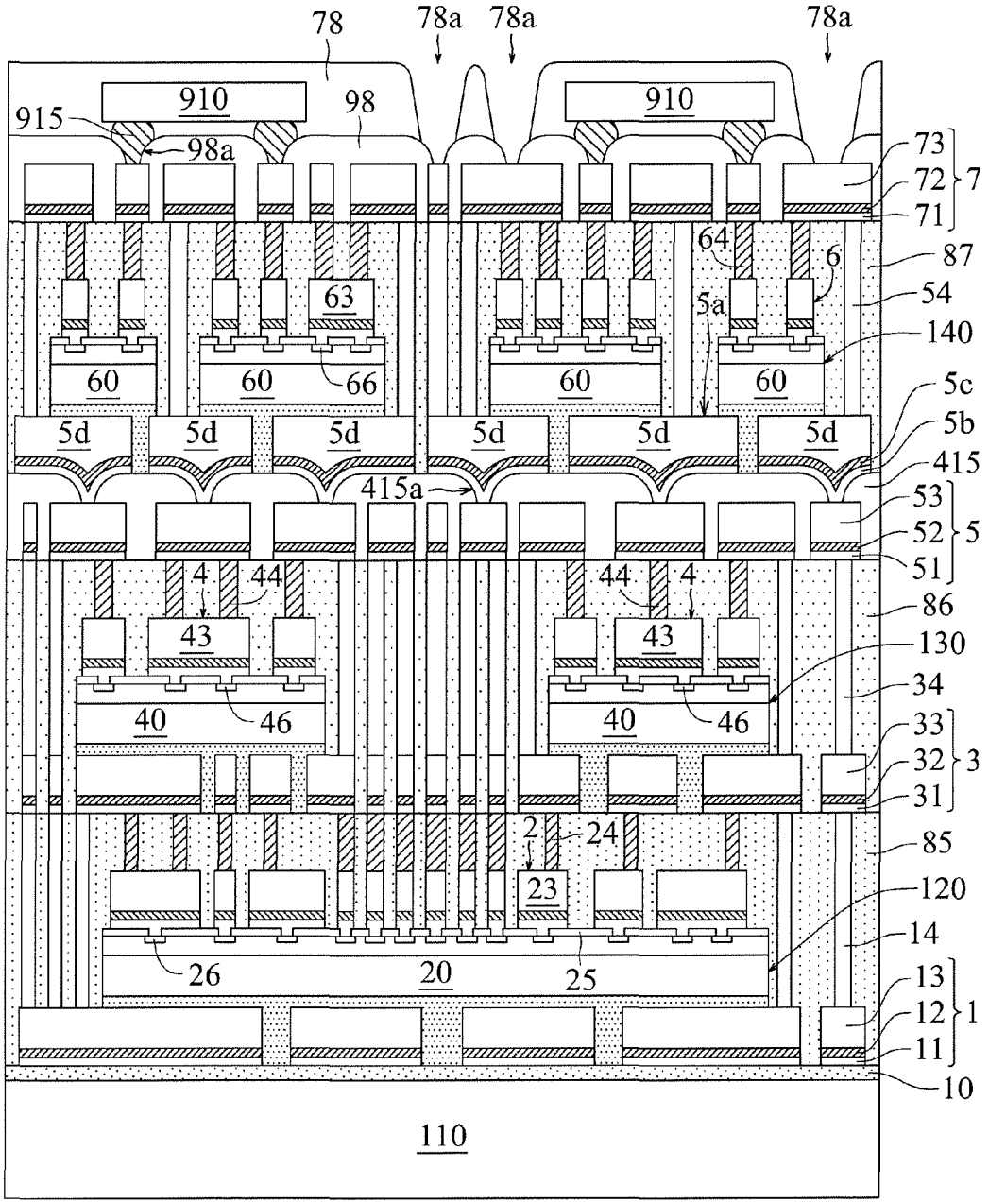
78
78a
78a
78a
910
910
915
98
98a
73
72
71
7
64
6
87
63
5a
54
140
60
60
66
60
60
5c
5d
5d
5d
5d
5d
5d
5b
415
415a
53
52
51
5
4
44
44
4
86
43
43
130
34
40
46
40
46
33
32
31
3
2
24
85
23
120
14
26
20
25
13
12
11
1
10
110

Fig. 65

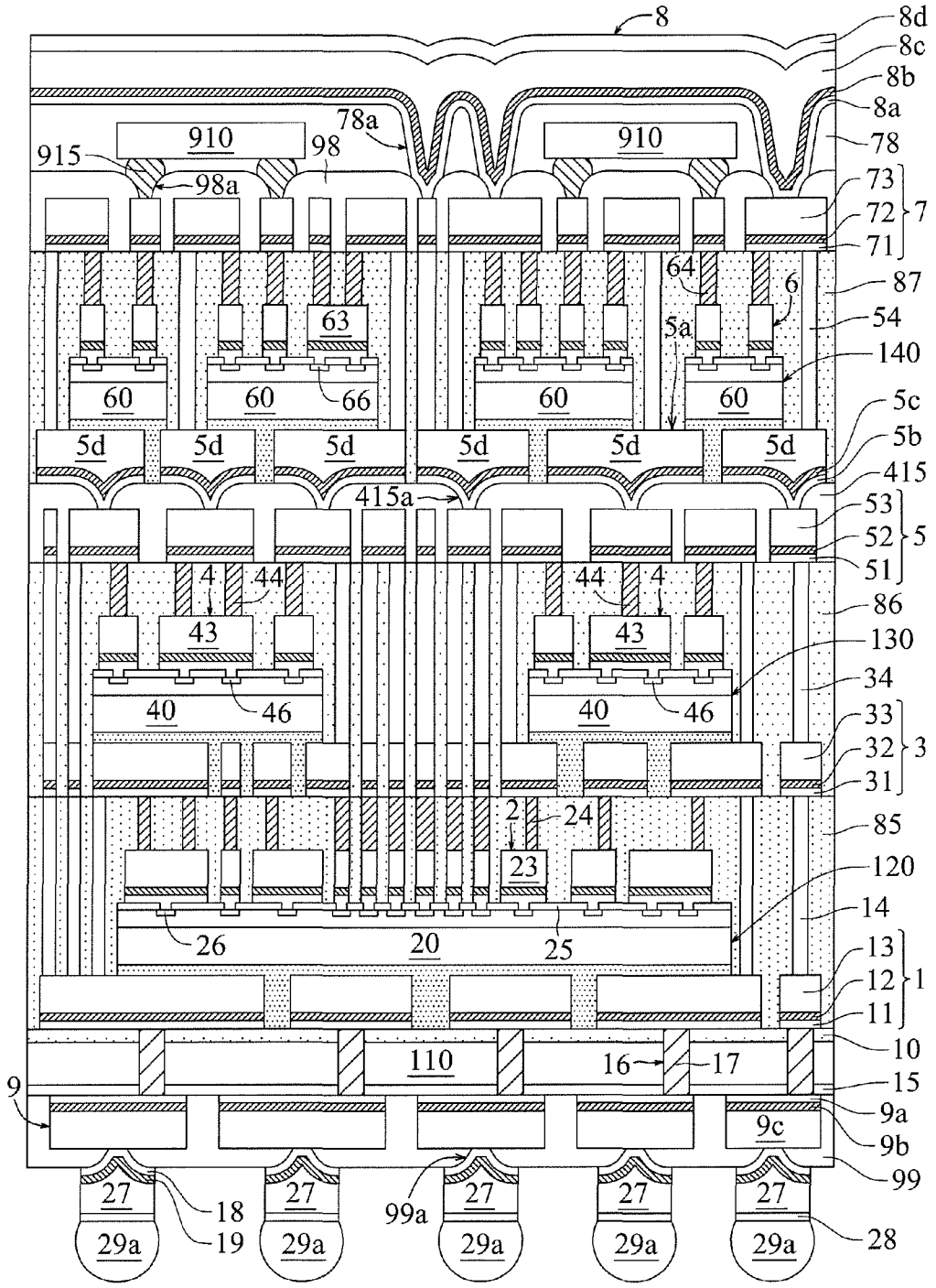
8
8d
8c
8b
8a
78
78a
910
910
915
98
98a
73
72
71
7
64
6
87
63
5a
54
140
60
60
66
60
60
5c
5d
5d
5d
5d
5d
5d
5b
415
415a
53
52
51
5
4
44
44
4
86
43
43
130
34
40
46
40
46
33
32
31
3
2
24
85
23
120
14
26
20
25
13
12
11
1
10
110
16
17
15
9
9a
9c
9b
99
27
27
27
27
27
18
19
99a
28
29a
29a
29a
29a
29a

Fig. 66

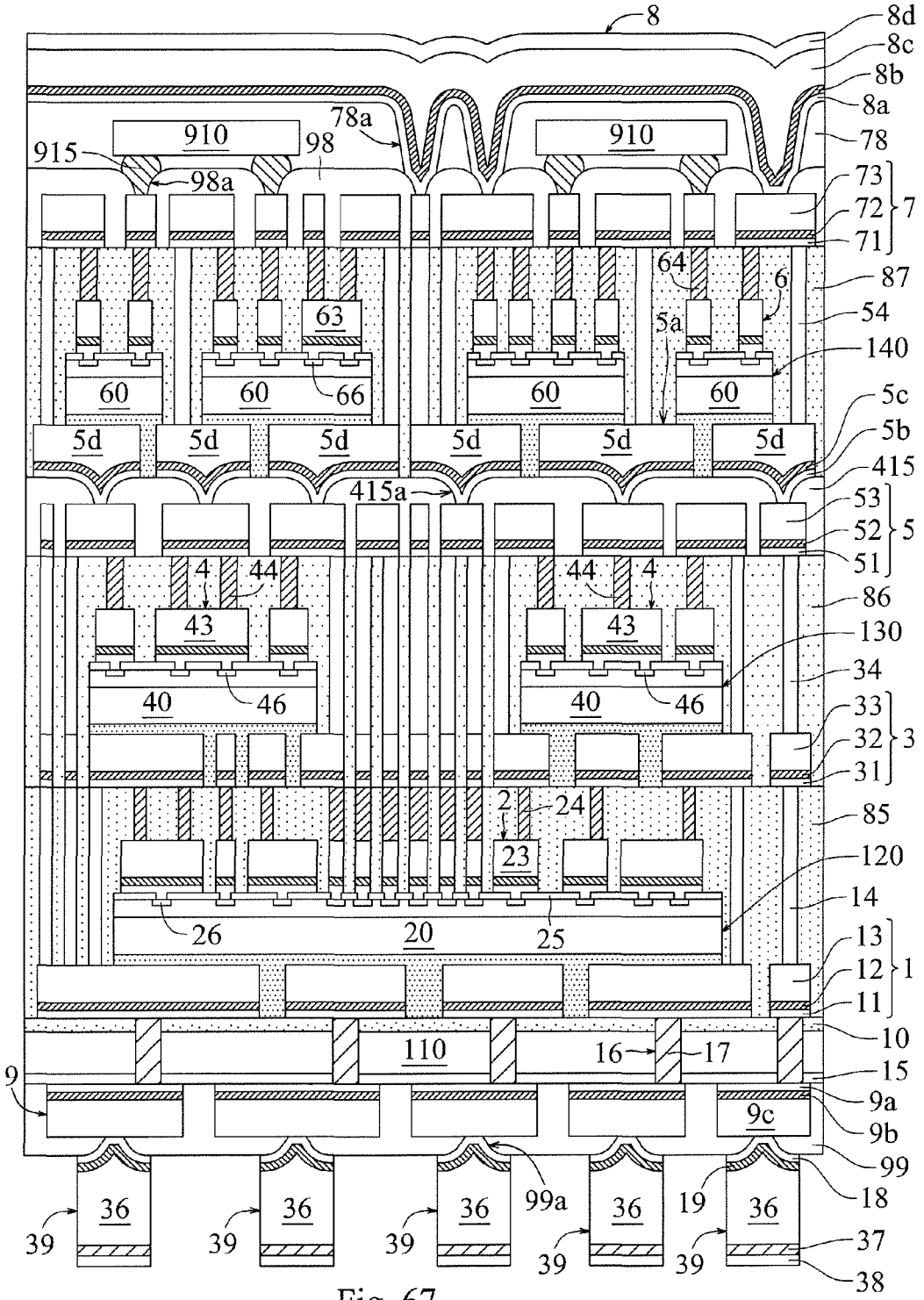
8
8d
8c
8b
8a
78
78a
910
910
915
98
98a
73
72
71
7
64
6
87
63
54
5a
140
60
60
66
60
60
5c
5d
5d
5d
5d
5d
5d
5b
415
415a
53
52
51
5
4
44
44
4
86
43
43
130
34
40
46
40
46
33
32
31
3
2
24
85
23
120
14
26
20
25
13
12
11
1
10
110
16
17
15
9
9a
9c
9b
99
99a
19
18
36
36
36
36
36
39
39
39
39
39
37
38

Fig. 67

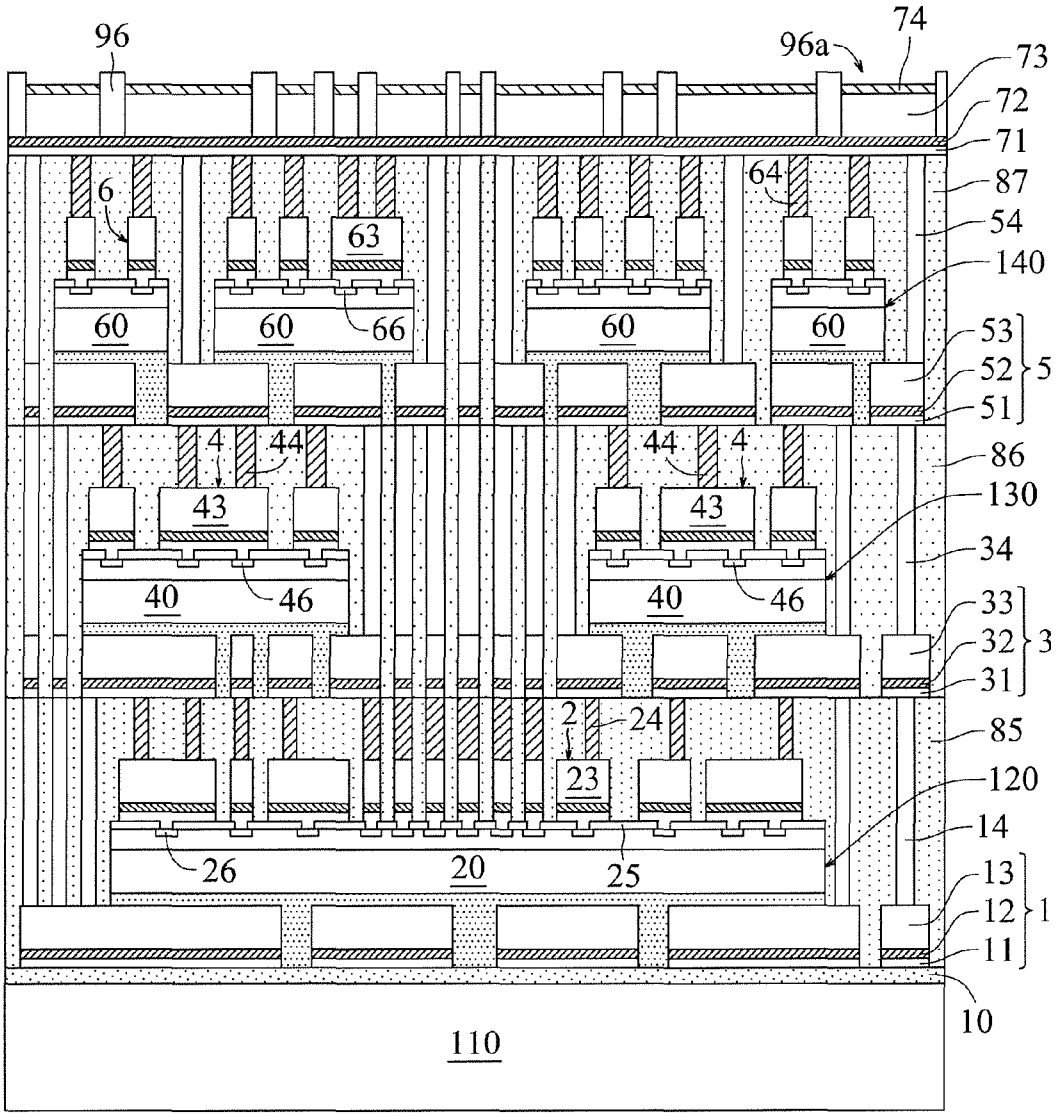
96
96a
74
73
72
71
87
54
140
6
63
64
60
60
66
60
60
53
52
51
5
4
44
44
4
86
43
43
130
34
40
46
40
46
33
32
31
3
2
24
85
23
120
14
26
20
25
13
12
11
1
10
110

Fig. 68

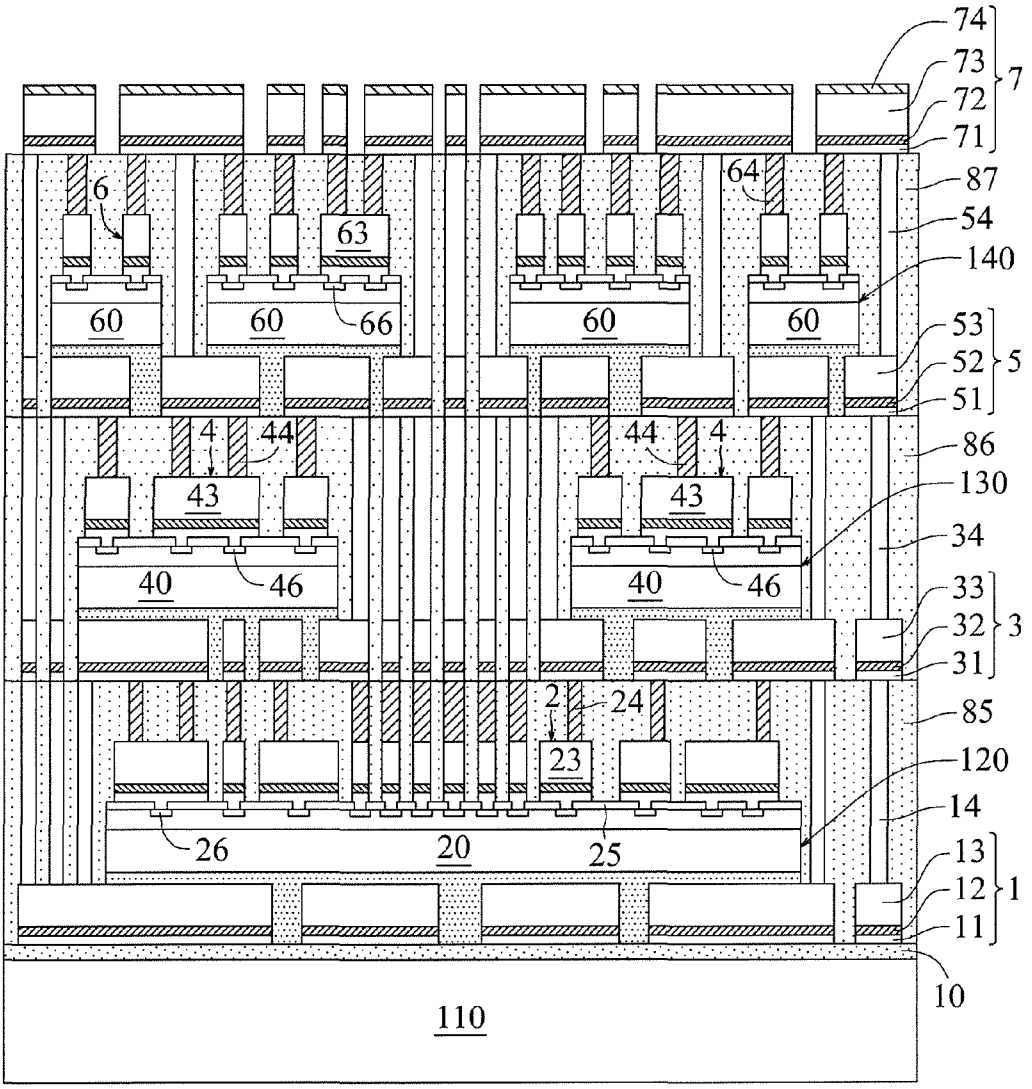
74
73
72
71
7
87
54
140
53
52
51
5
86
130
34
33
32
31
3
85
120
14
13
12
11
1
10
110
6
63
64
60
60
66
60
60
4
44
44
4
43
43
40
46
40
46
2
24
23
26
20
25

Fig. 69

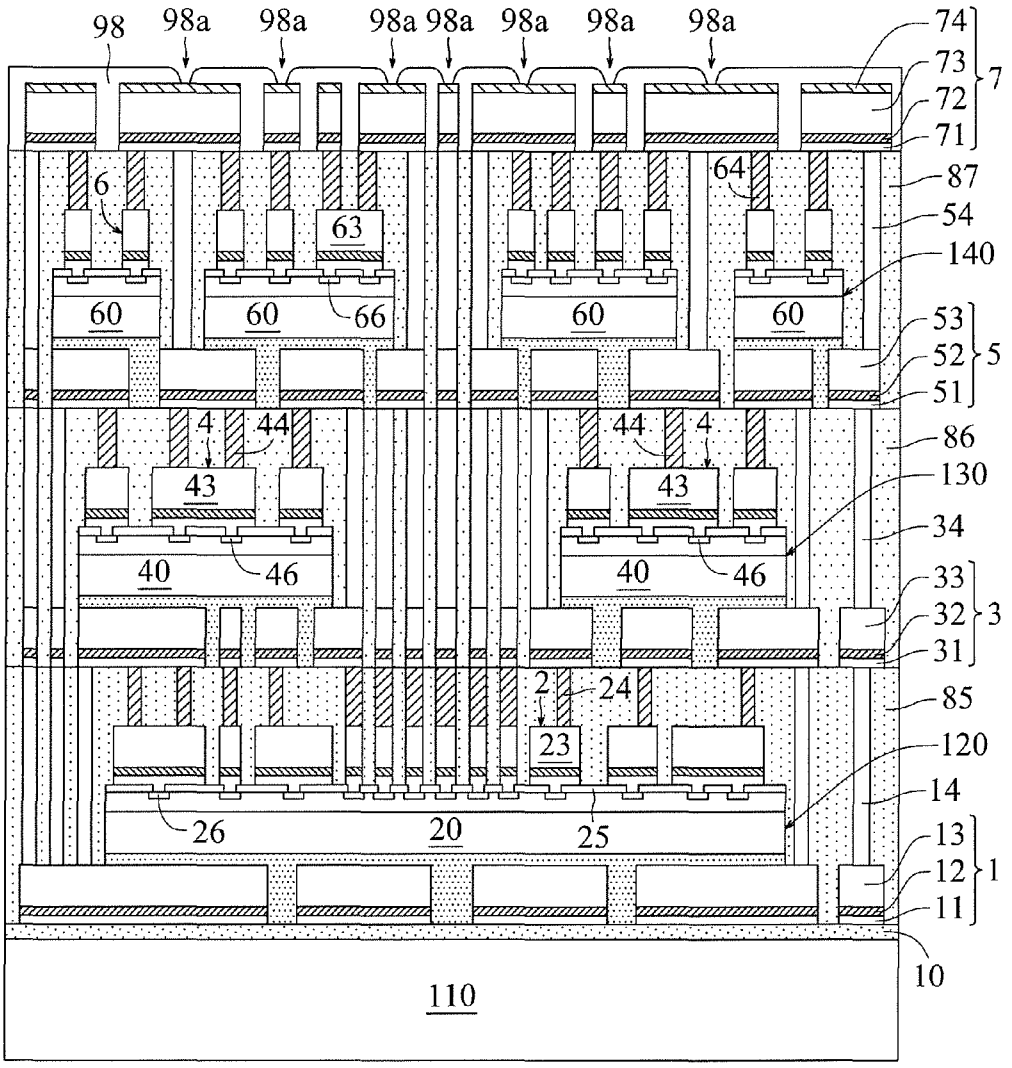
98
98a
74
73
72
71
7
6
63
64
87
54
140
60
66
53
52
51
5
4
44
86
43
130
34
40
46
33
32
31
3
2
24
85
23
120
14
26
20
25
13
12
11
1
10
110

Fig. 70

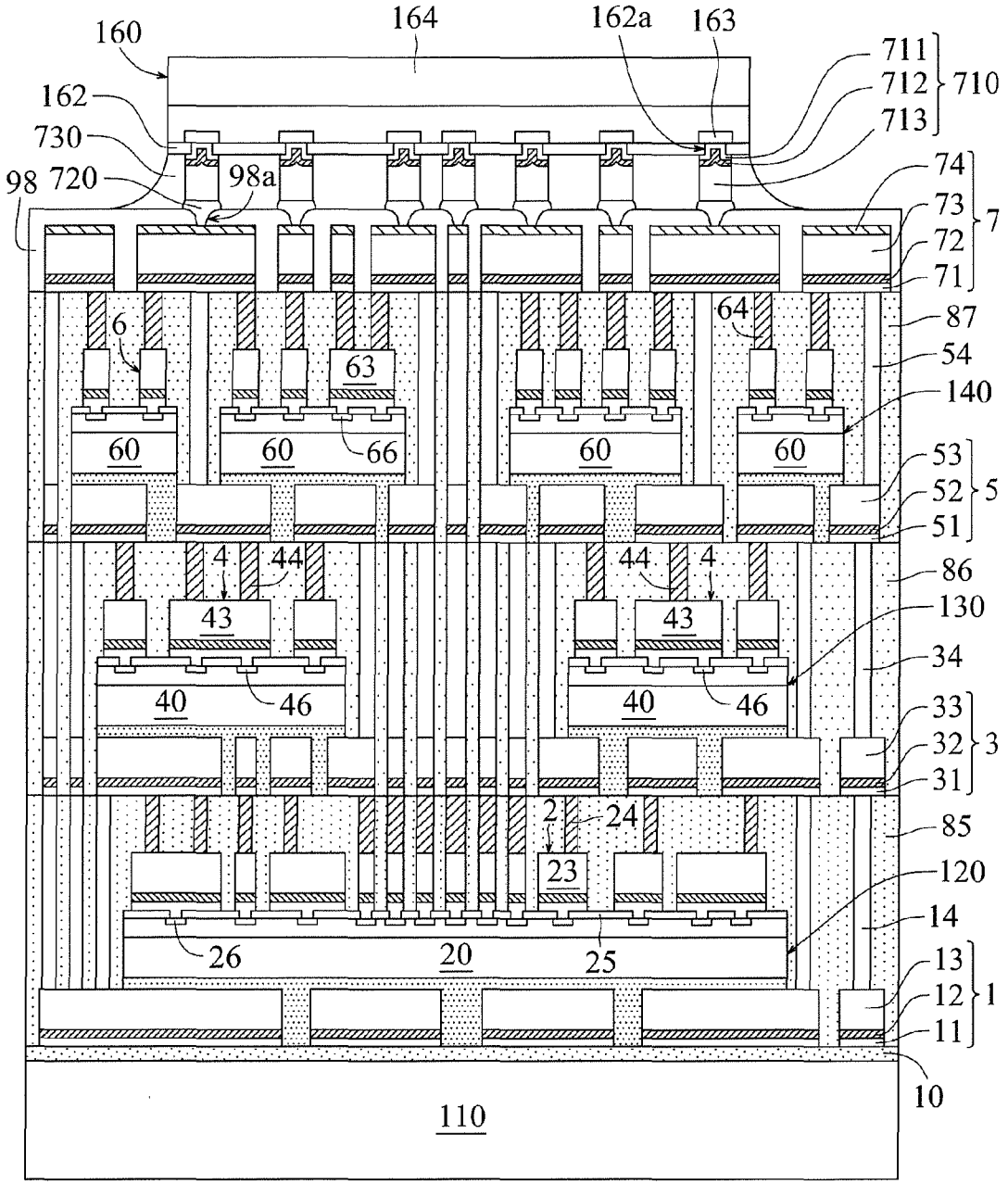
160
164
162a
163
711
712
713
710
162
730
720
98
98a
74
73
72
71
7
6
64
87
54
63
140
60
60
66
60
60
53
52
51
5
4
44
44
4
86
43
43
130
34
40
46
40
46
33
32
31
3
2
24
85
23
120
14
26
20
25
13
12
11
1
10
110

Fig. 71

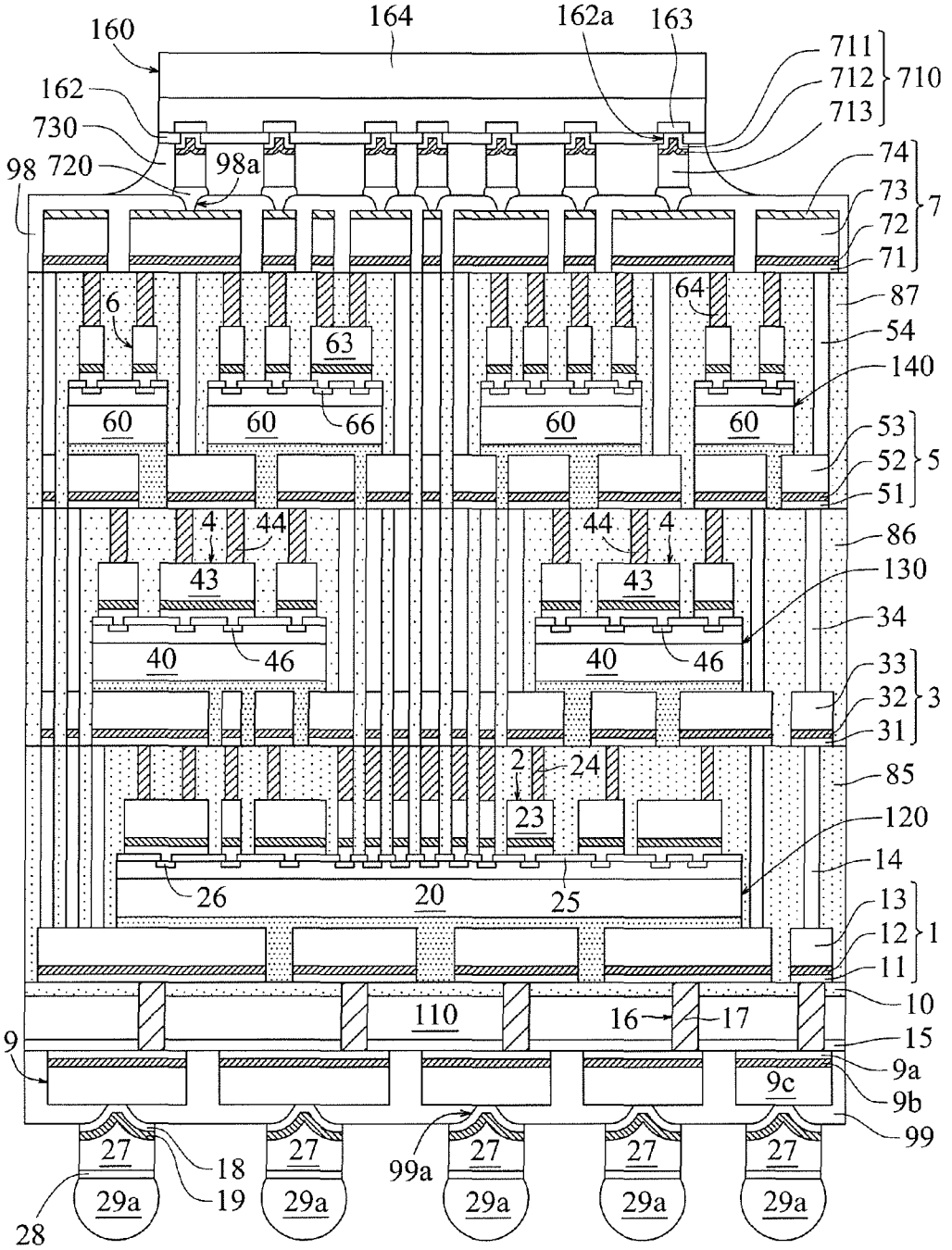
160
164
162a
163
711
712
713
710
162
730
720
98
98a
74
73
72
71
7
6
64
87
54
63
140
60
60
66
60
60
53
52
51
5
4
44
44
4
86
43
43
130
34
40
46
40
46
33
32
31
3
2
24
85
23
120
14
26
20
25
13
12
11
1
10
110
16
17
15
9
9a
9c
9b
99
27
27
27
27
27
18
19
99a
29a
29a
29a
29a
29a
28

Fig. 72

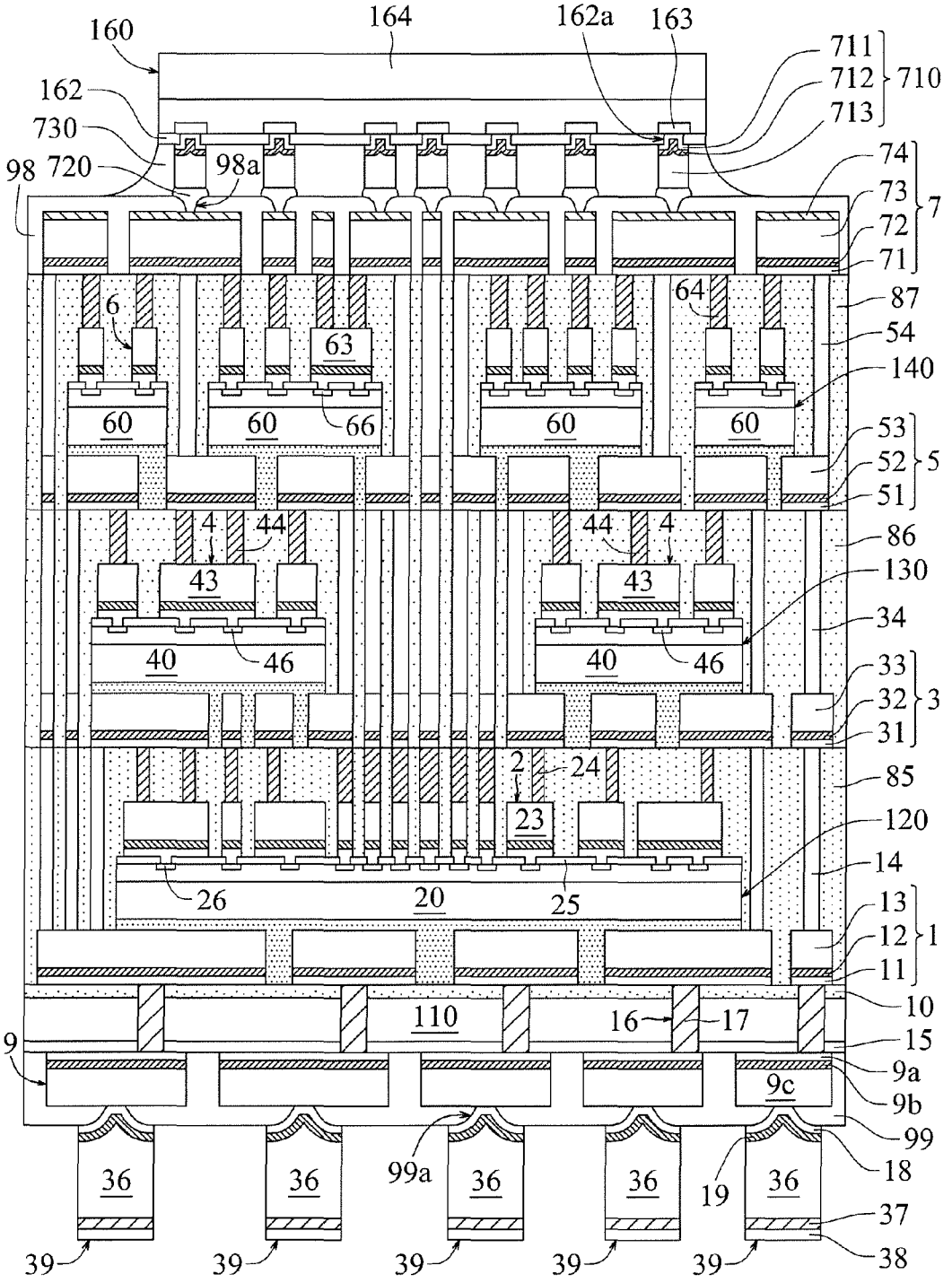
160
164
162a
163
711
712
713
710
162
730
720
98
98a
74
73
72
71
7
6
64
87
54
63
140
60
60
66
60
60
53
52
51
5
4
44
44
4
86
43
43
130
34
40
46
40
46
33
32
31
3
2
24
85
23
120
14
26
20
25
13
12
11
1
110
16
17
10
15
9
9a
9c
9b
99
99a
36
36
36
36
36
19
18
37
39
39
39
39
39
38

Fig. 73

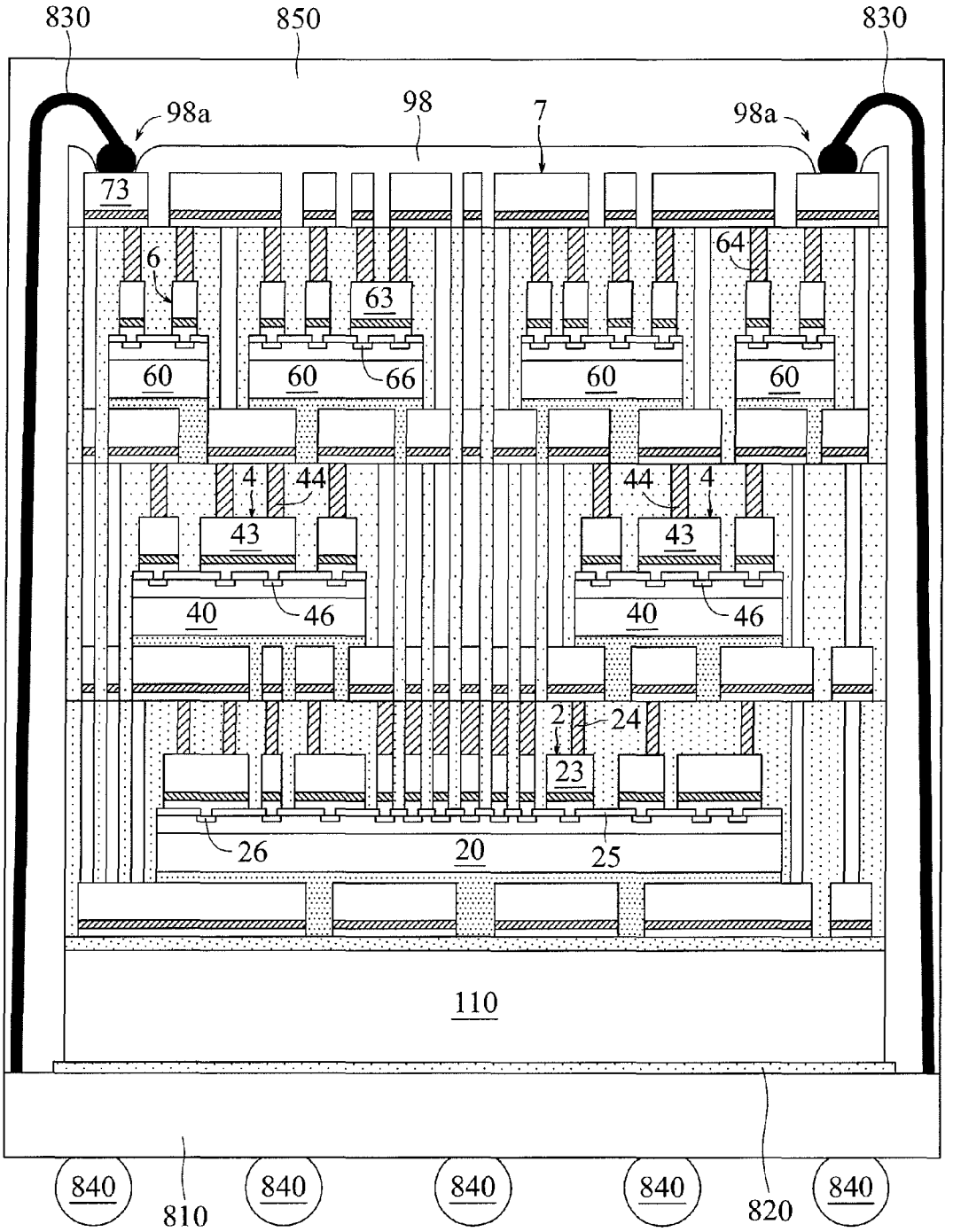
830
850
830
98a
98
7
98a
73
6
64
63
60
60
66
60
60
4
44
44
4
43
43
40
46
40
46
2
24
23
26
20
25
110
840
810
840
840
840
820
840

Fig. 74

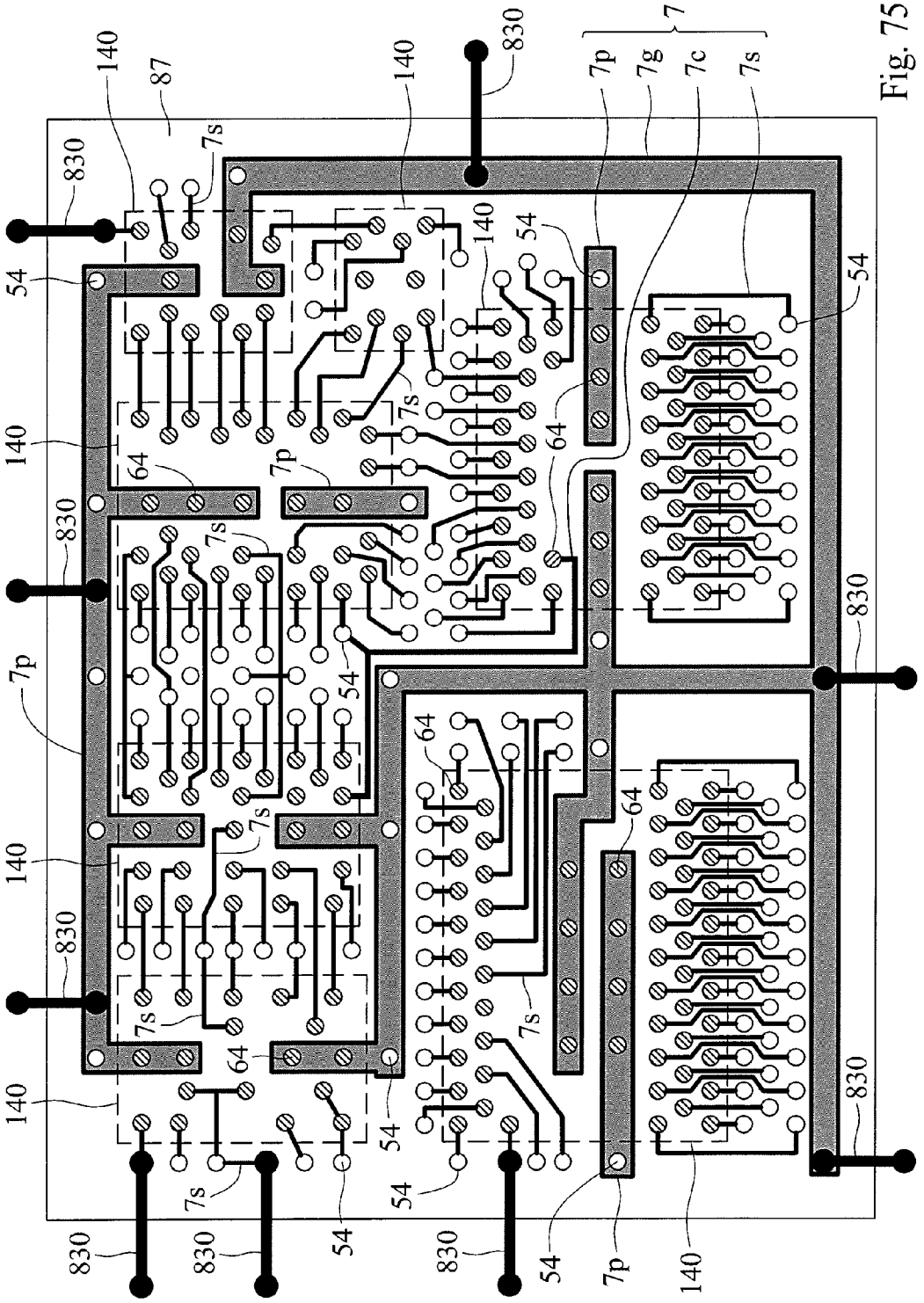

Fig. 75

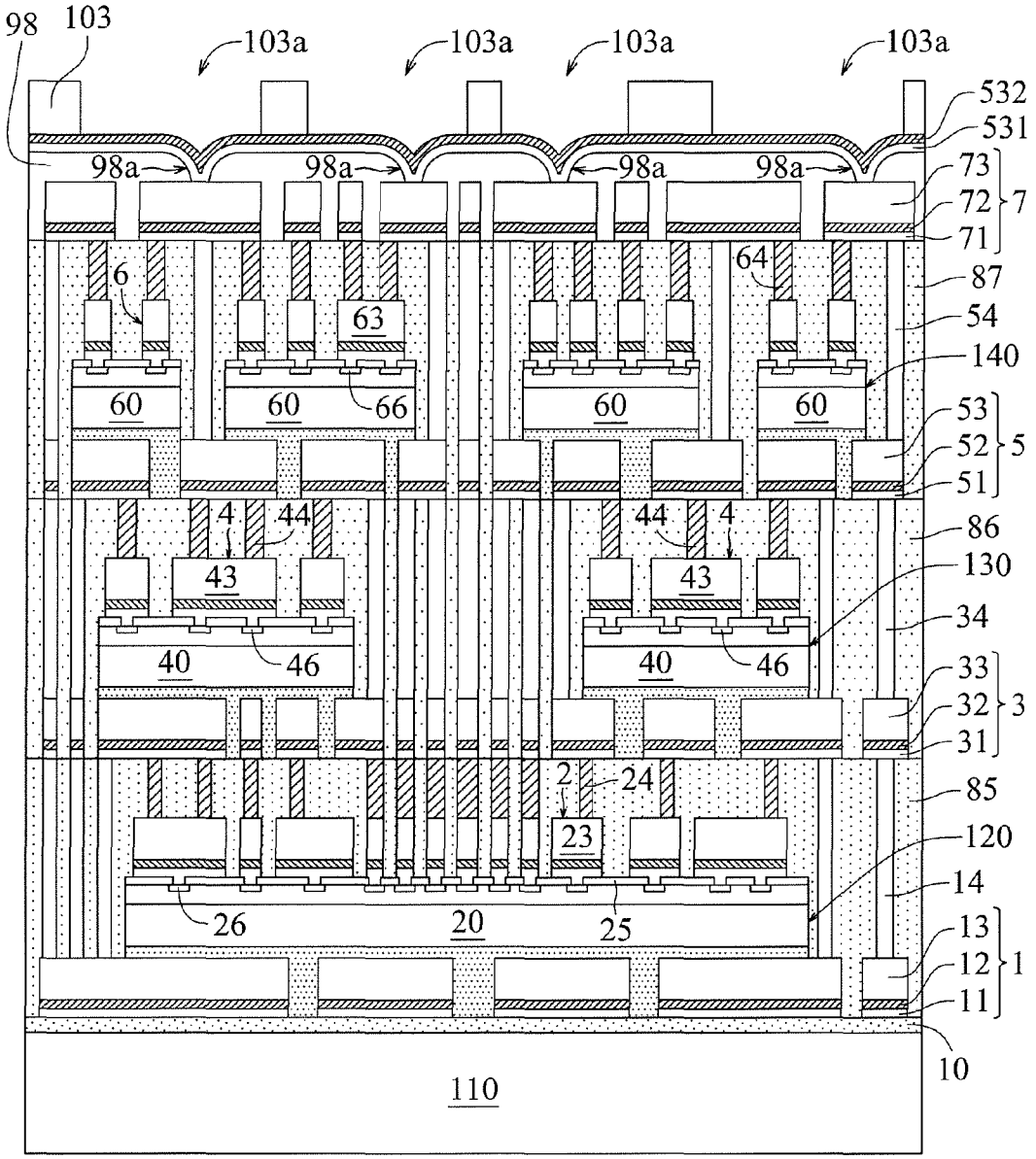
98
103
103a
103a
103a
103a
532
531
98a
98a
98a
98a
73
72
7
71
6
64
87
63
54
140
60
60
66
60
60
53
52
5
51
4
44
44
4
86
43
43
130
34
40
46
40
46
33
32
3
31
2
24
85
23
120
14
26
20
25
13
12
1
11
10
110

Fig. 76

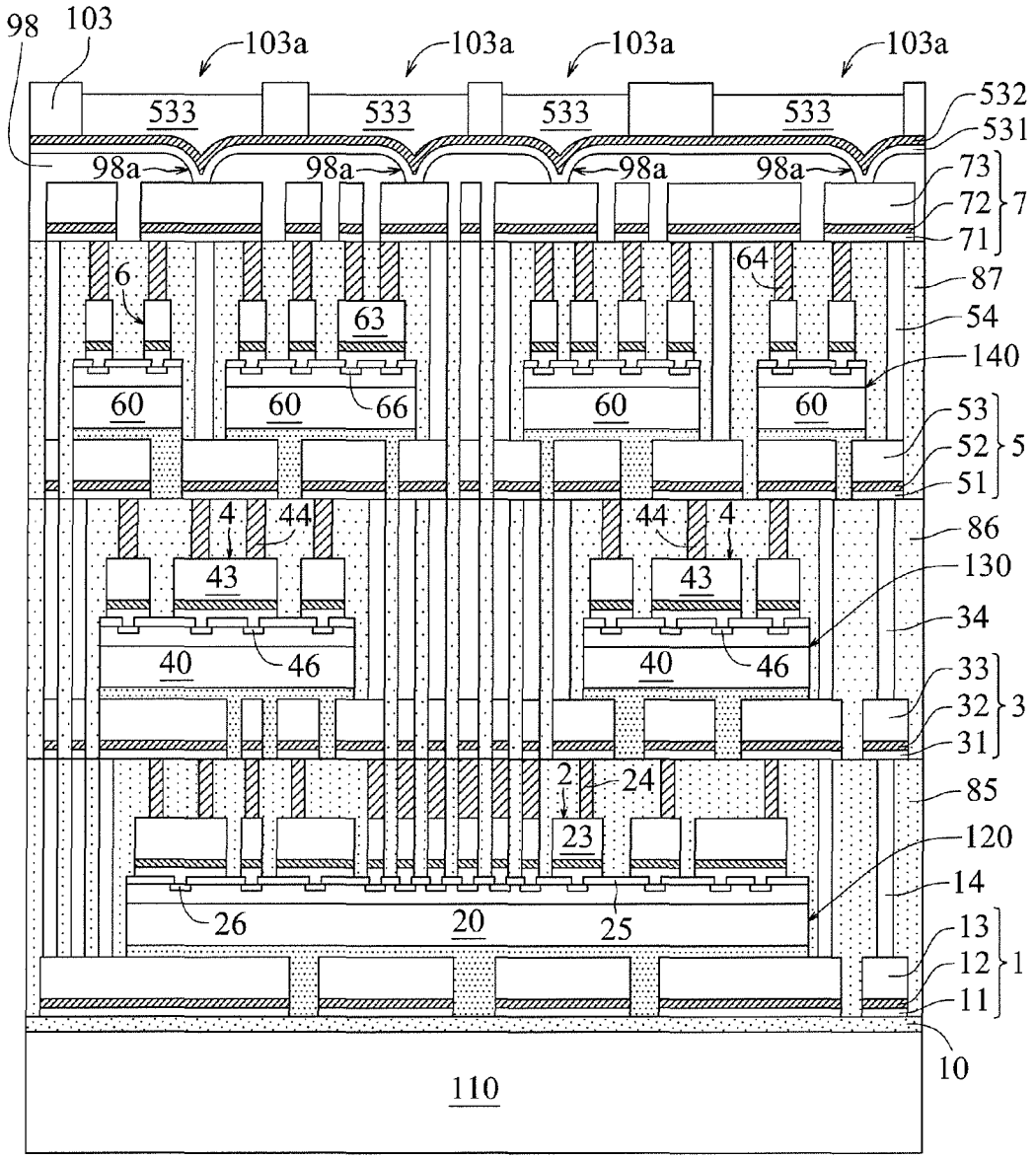
98
103
103a
103a
103a
103a
533
533
533
533
532
531
98a
98a
98a
98a
73
72
71
7
6
64
87
63
54
140
60
60
66
60
60
53
52
51
5
4
44
44
4
86
43
43
130
34
40
46
40
46
33
32
31
3
2
24
85
23
120
14
26
20
25
13
12
11
1
10
110

Fig. 77

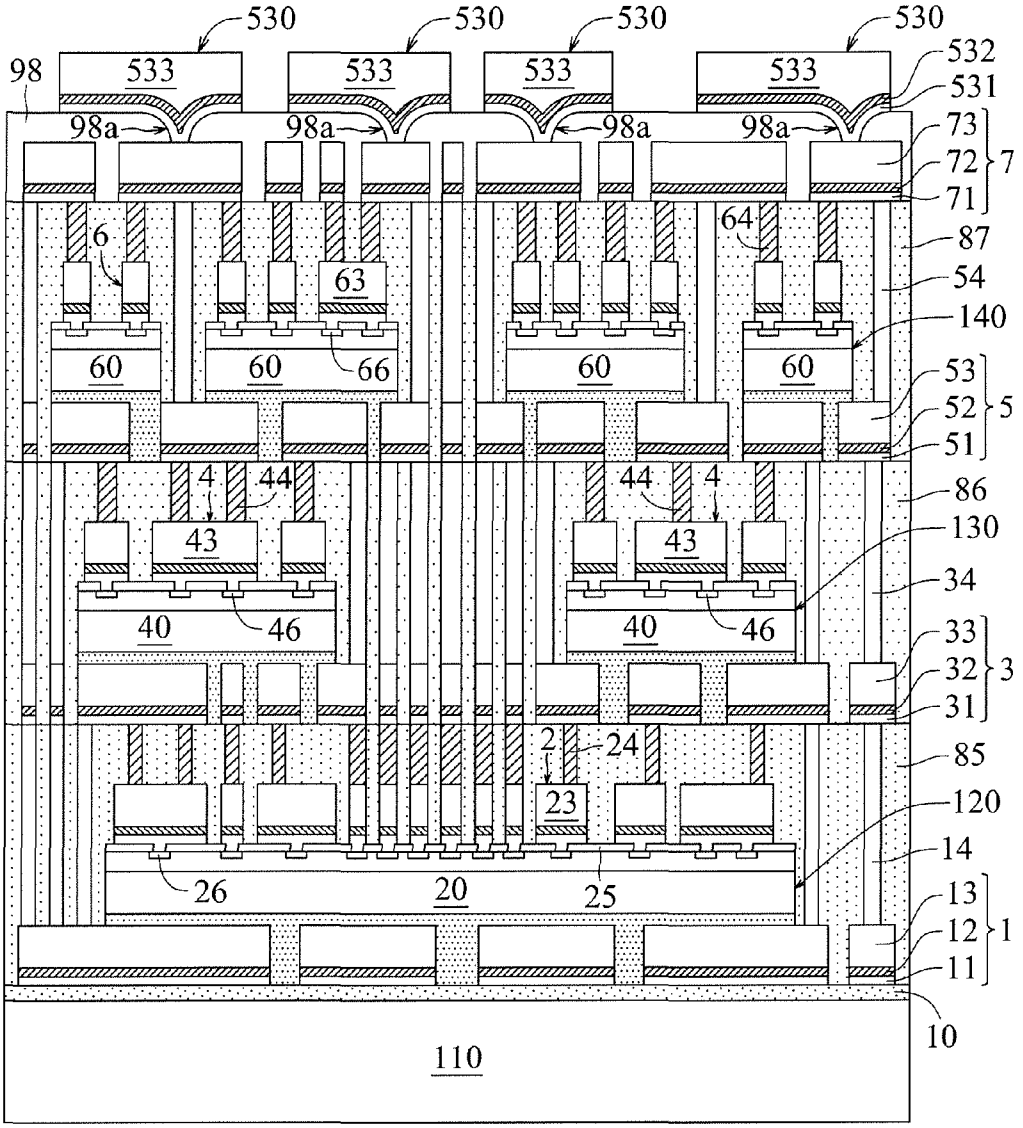
530
530
530
530
98
533
533
533
533
532
531
98a
98a
98a
98a
73
72
7
71
6
64
87
63
54
140
60
60
66
60
60
53
52
5
51
4
44
44
4
86
43
43
130
34
40
46
40
46
33
32
3
31
2
24
85
23
120
14
26
20
25
13
12
1
11
10
110

Fig. 78

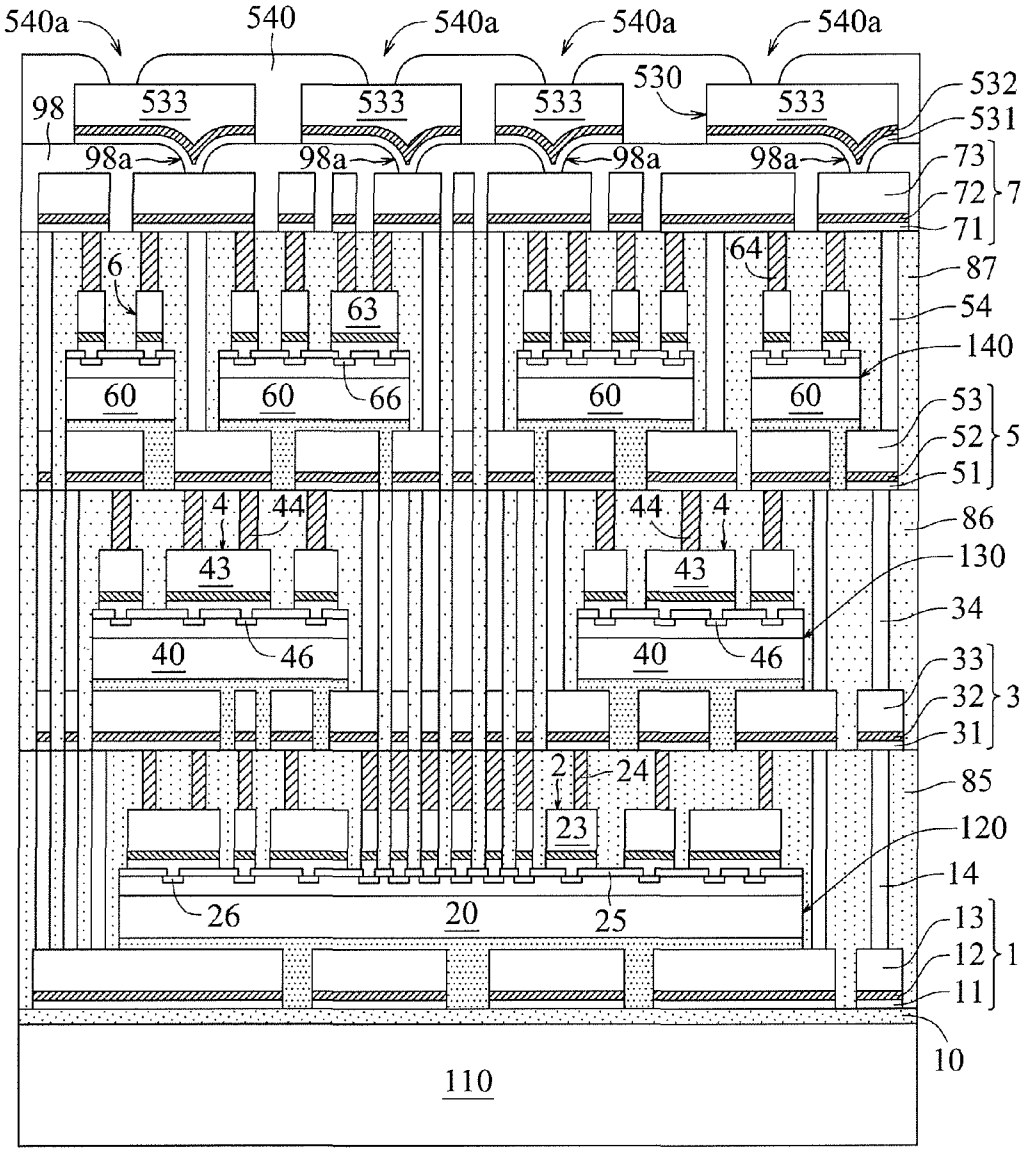
540a
540
540a
540a
540a
530
533
533
533
533
532
531
98
98a
98a
98a
98a
73
72
71
7
6
64
87
63
54
140
60
60
66
60
60
53
52
51
5
4
44
44
4
86
43
43
130
34
40
46
40
46
33
32
31
3
2
24
85
23
120
14
26
20
25
13
12
11
1
10
110

Fig. 79

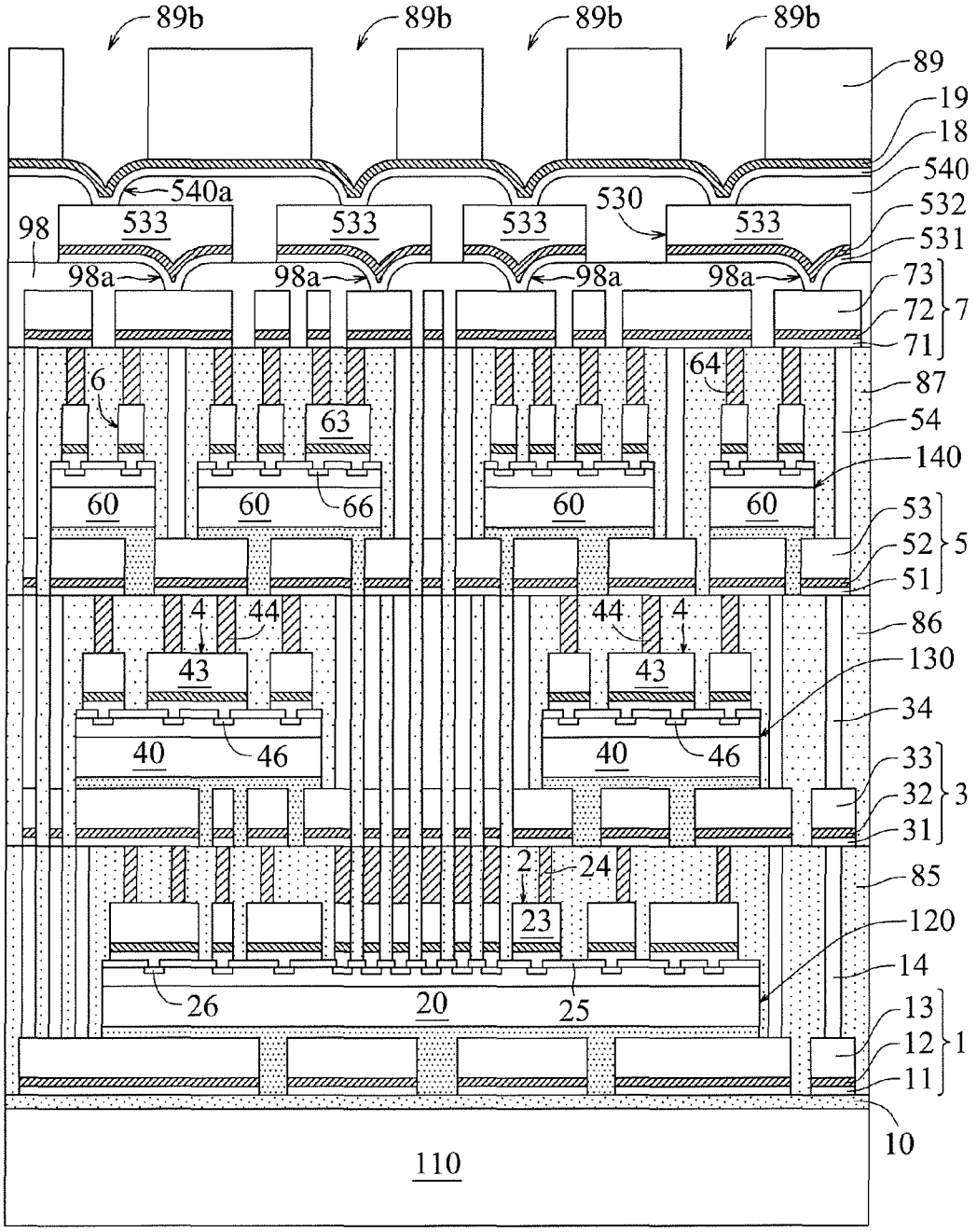
89b
89b
89b
89b
89
19
18
540
540a
530
532
533
533
533
533
531
98
98a
98a
98a
98a
73
72
71
7
6
64
87
63
54
140
60
60
66
60
60
53
52
51
5
4
44
44
4
86
43
43
130
34
40
46
40
46
33
32
31
3
2
24
85
23
120
14
26
20
25
13
12
11
1
10
110

Fig. 80

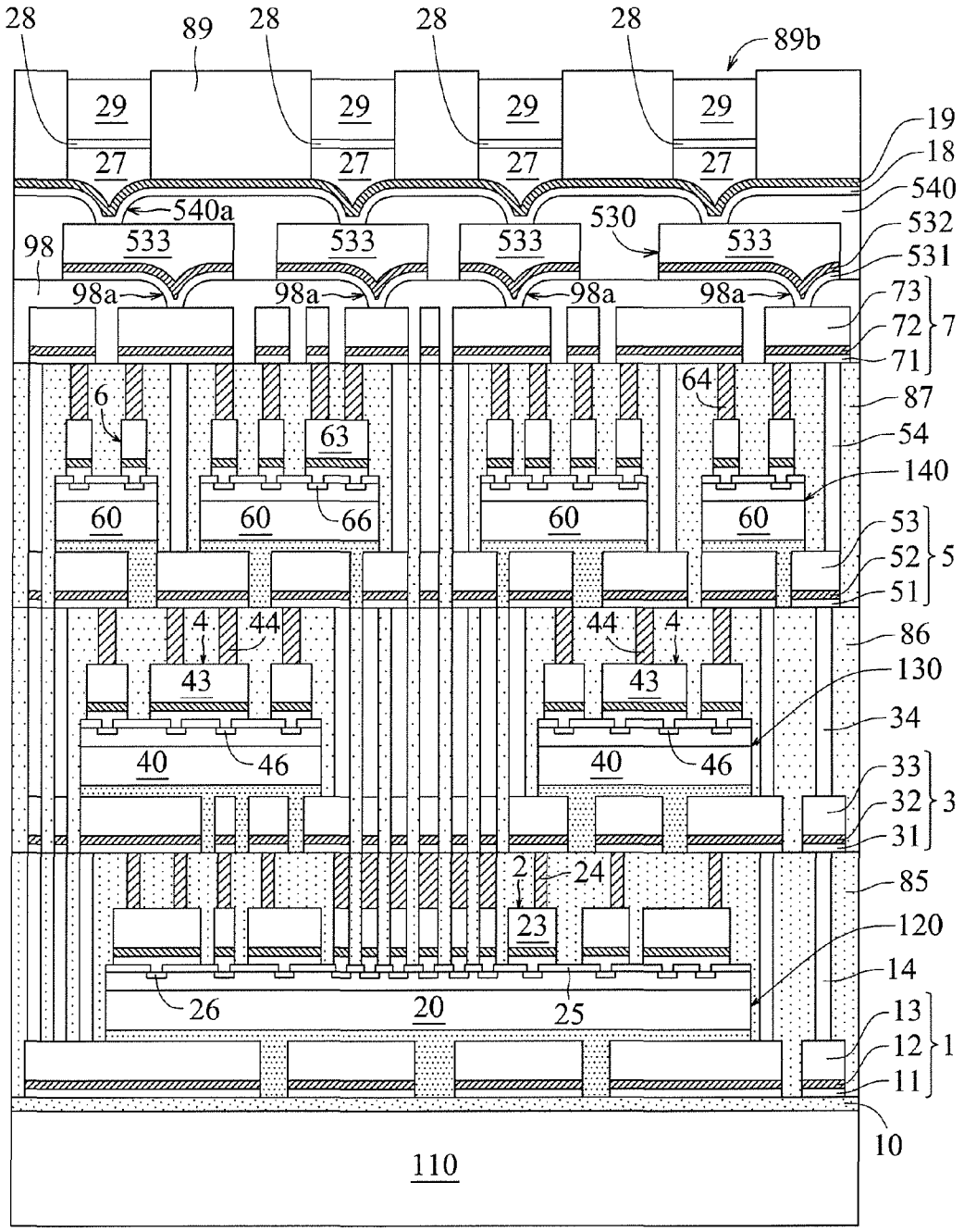
28
89
28
28
28
89b
29
29
29
29
27
27
27
27
19
18
540
540a
530
532
533
533
533
533
531
98
98a
98a
98a
98a
73
72
71
7
6
64
87
63
54
140
60
60
66
60
60
53
52
51
5
4
44
44
4
86
43
43
130
34
40
46
40
46
33
32
31
3
2
24
85
23
120
14
26
20
25
13
12
11
1
10
110

Fig. 81

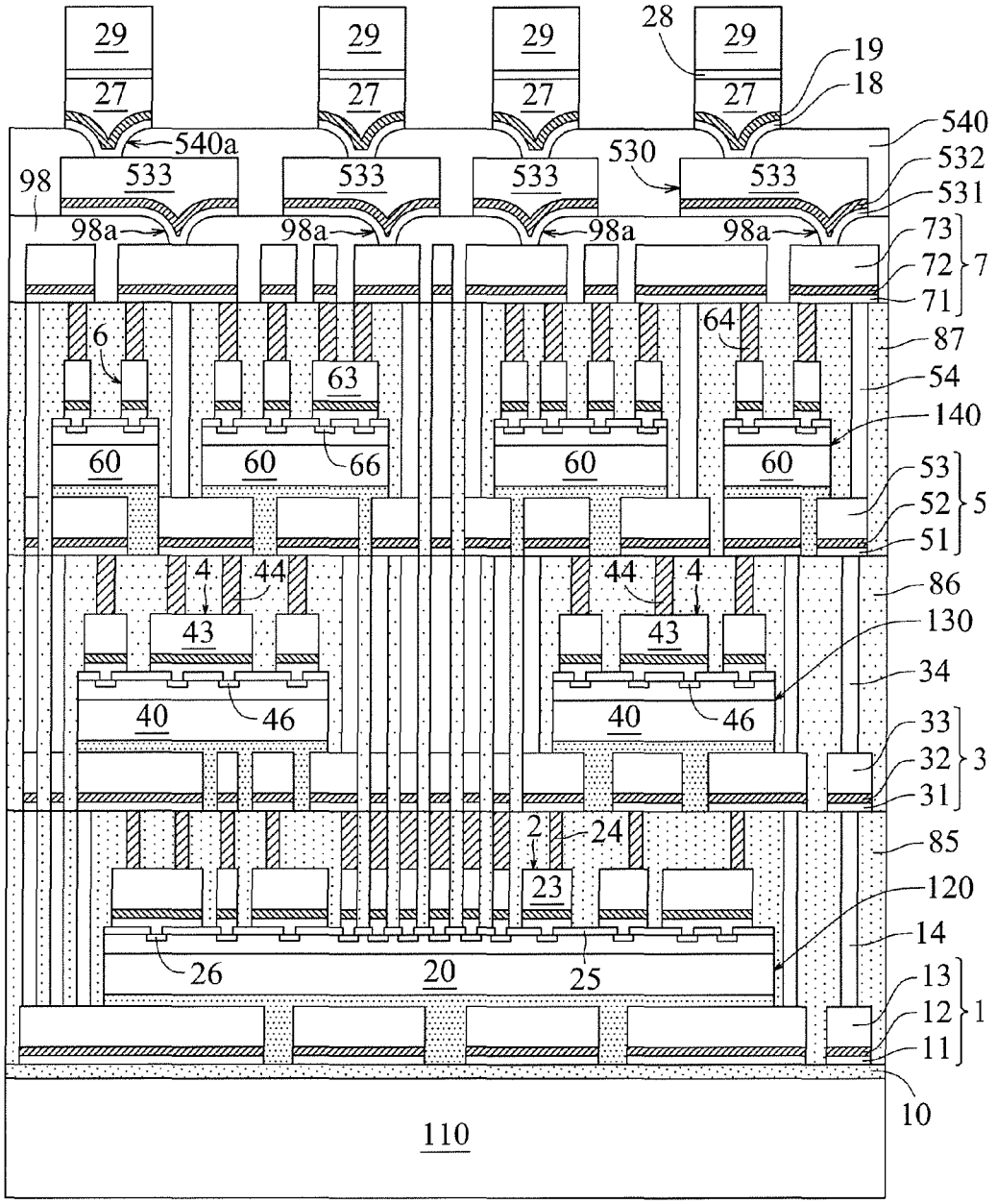
29
27
28
19
18
540
540a
530
532
531
533
98
98a
73
72
71
7
6
64
87
63
54
140
60
66
53
52
51
5
4
44
86
43
130
34
40
46
33
32
31
3
2
24
85
23
120
14
26
20
25
13
12
11
1
10
110

Fig. 82

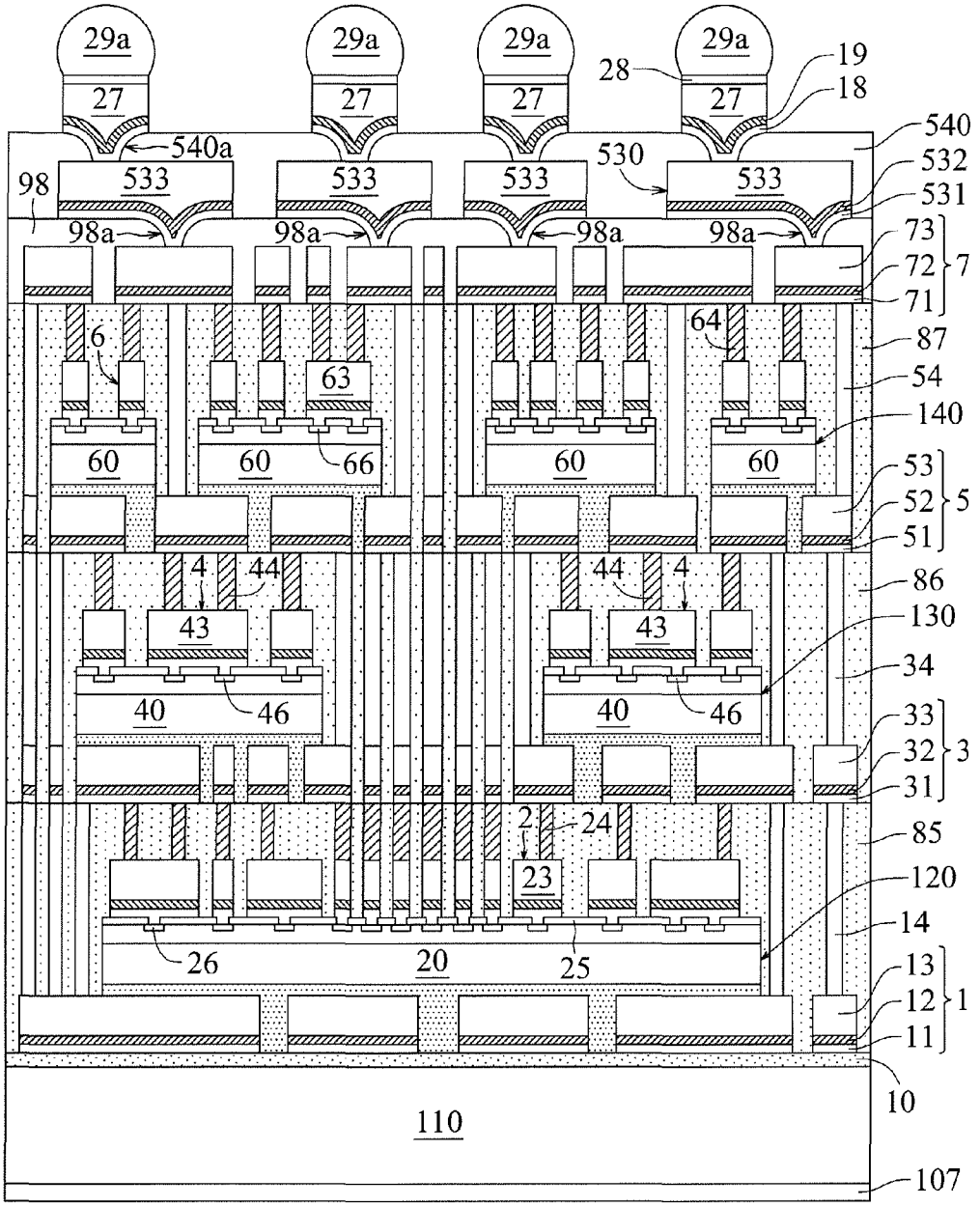
29a
29a
29a
29a
28
19
18
27
27
27
27
540
540a
530
532
533
533
533
533
531
98
98a
98a
98a
98a
73
72
7
71
6
64
87
63
54
140
60
60
66
60
60
53
52
5
51
4
44
44
4
86
43
43
130
34
40
46
40
46
33
32
3
31
2
24
85
23
120
14
26
20
25
13
12
1
11
10
110
107

Fig. 83

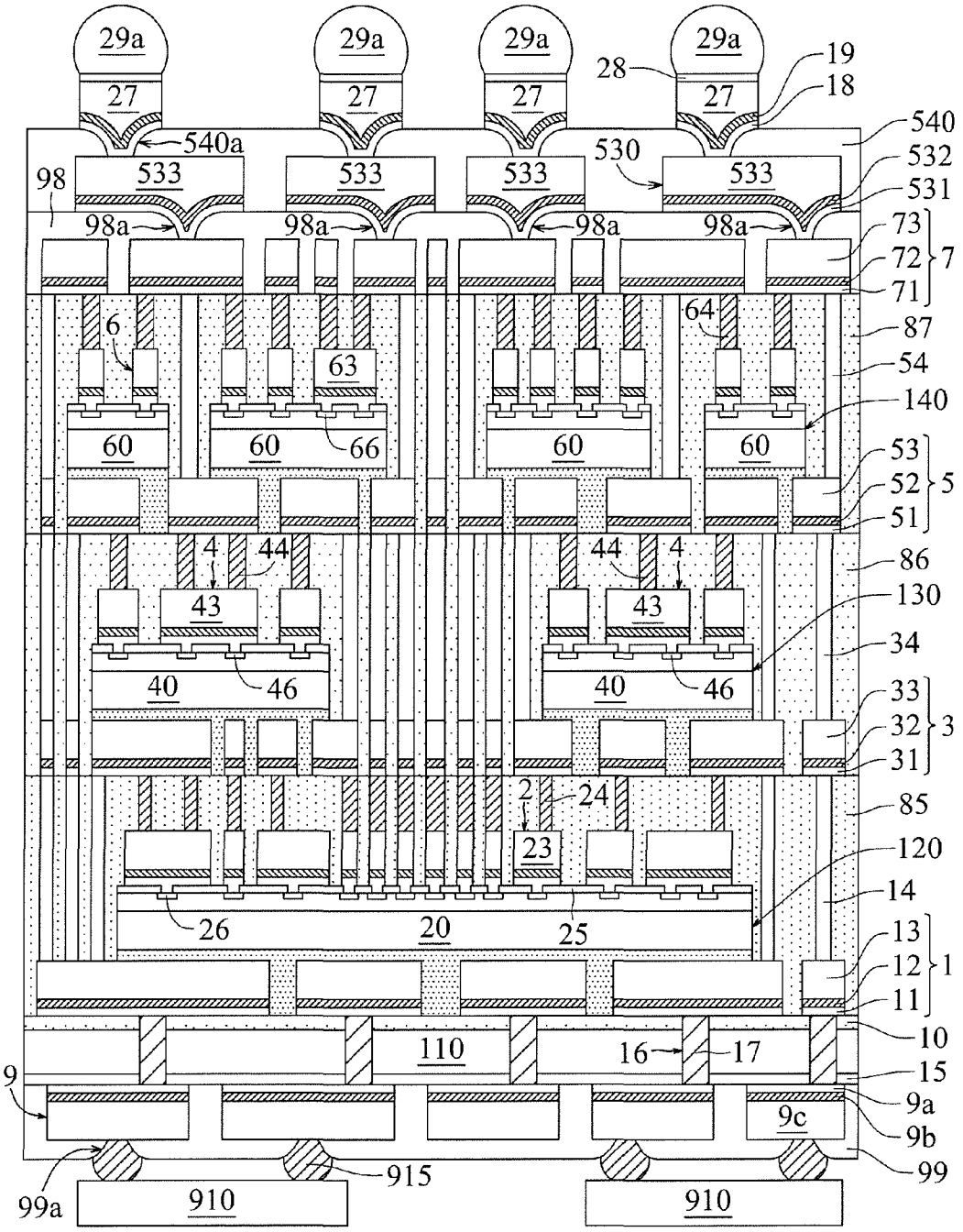
29a
27
28
19
18
540
540a
530
532
533
531
98
98a
73
72
71
7
6
64
87
63
54
140
60
66
53
52
51
5
4
44
86
43
130
34
40
46
33
32
31
3
2
24
85
23
120
14
26
20
25
13
12
11
1
10
110
16
17
15
9
9a
9c
9b
99
99a
915
910

Fig. 84

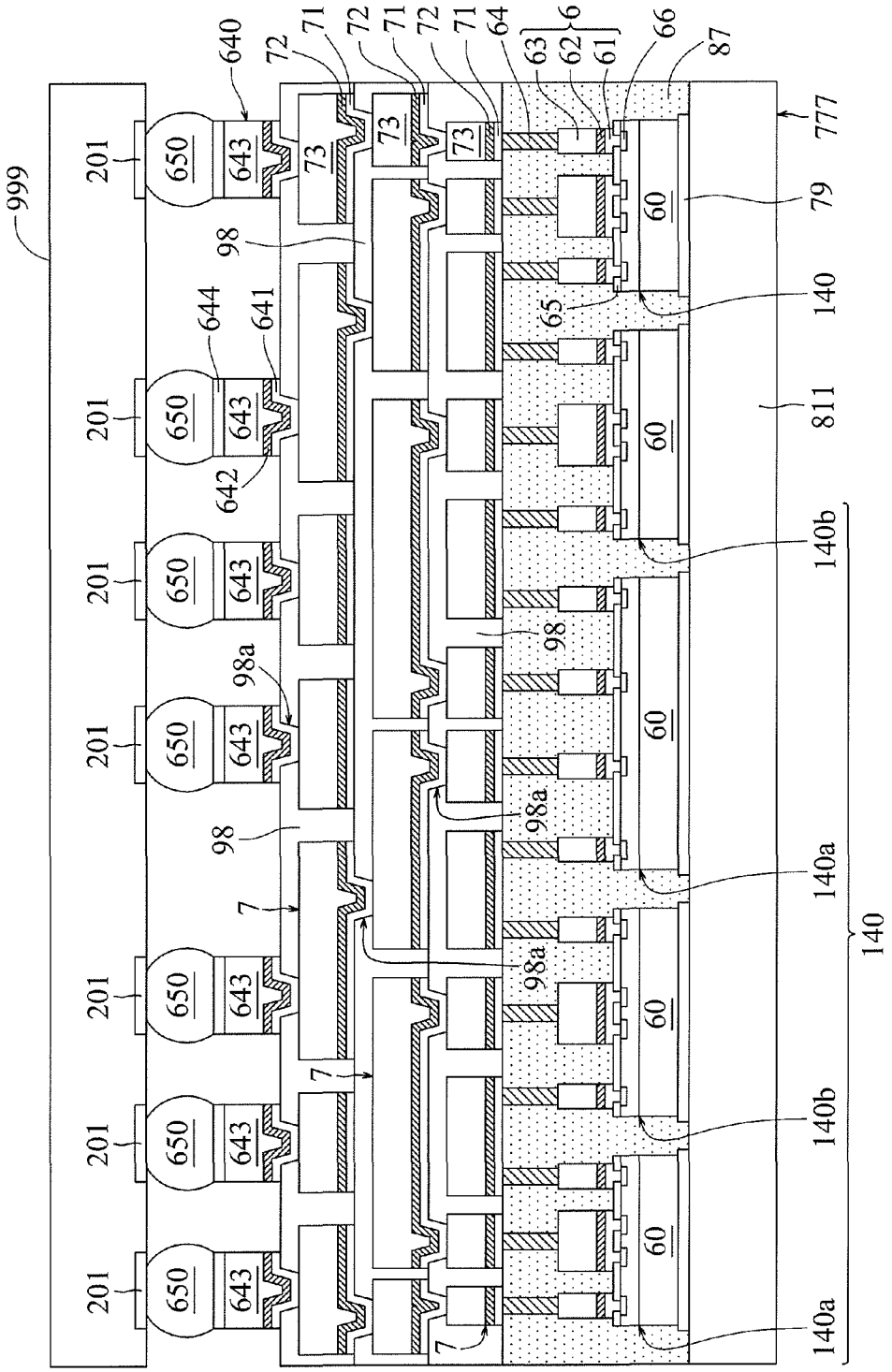
999
201
650
643
640
644
641
642
72
71
73
98
98a
7
64
63
62
61
6
66
87
777
79
60
65
140
811
140b
140a

Fig. 85

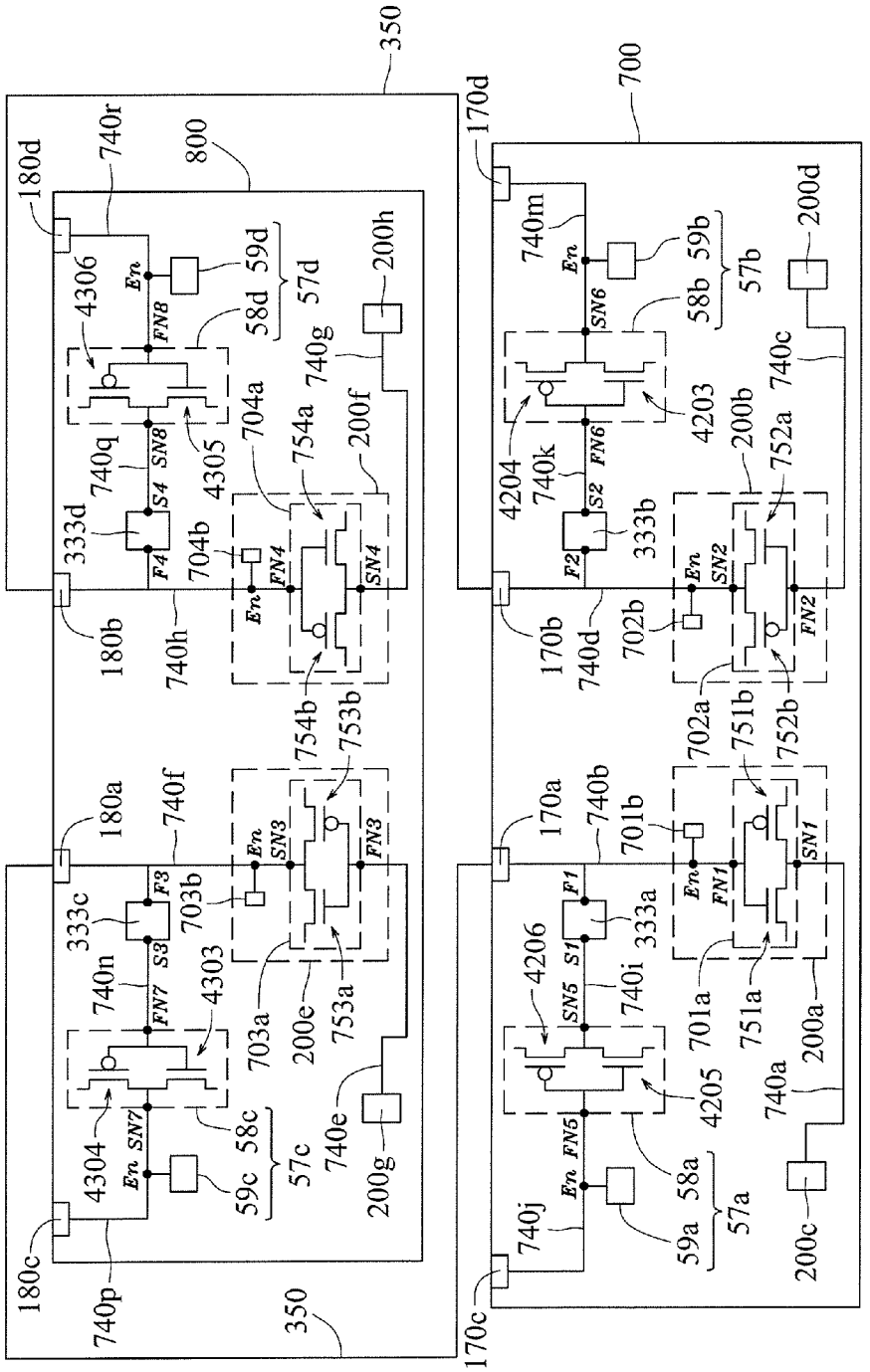
350
700
800
180d
740r
4306
En
FN8
59d
58d
57d
200h
740g
740q
SN8
4305
704a
754a
200f
333d
S4
F4
704b
FN4
SN4
180b
740h
754b
753b
180a
740f
SN3
FN3
333c
F3
703b
S3
740n
FN7
4303
703a
200e
753a
4304
SN7
58c
59c
57c
740e
200g
180c
740p
170d
740m
59b
58b
57b
200d
SN6
4203
740c
4204
740k
FN6
200b
752a
S2
333b
F2
SN2
FN2
170b
740d
702b
702a
751b
752b
170a
740b
701b
SN1
FN1
F1
333a
S1
4206
SN5
740i
701a
751a
200a
4205
740a
FN5
58a
59a
57a
740j
200c
170c

Fig. 86

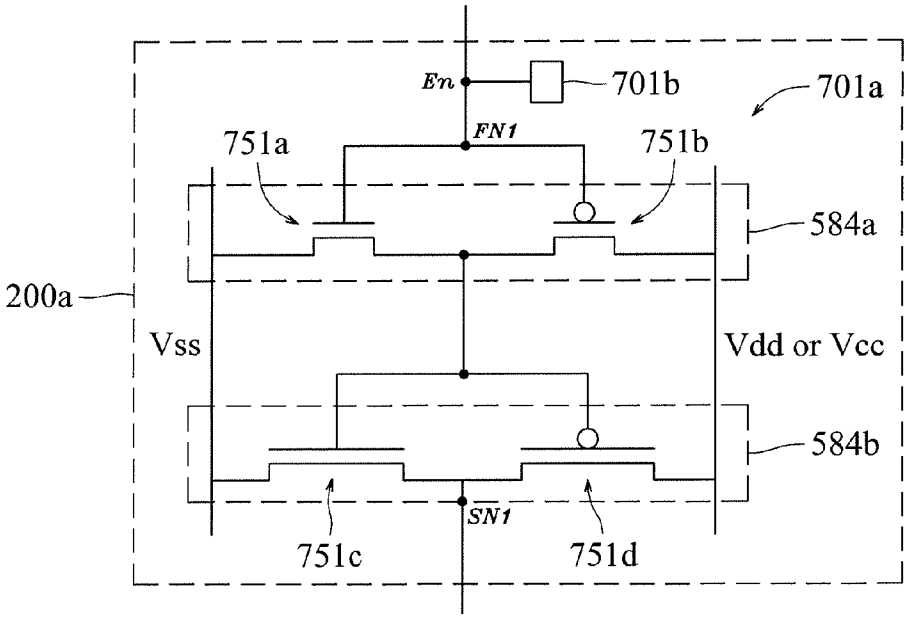
En
701b
701a
FN1
751a
751b
584a
200a
Vss
Vdd or Vcc
584b
SN1
751c
751d

Fig. 87

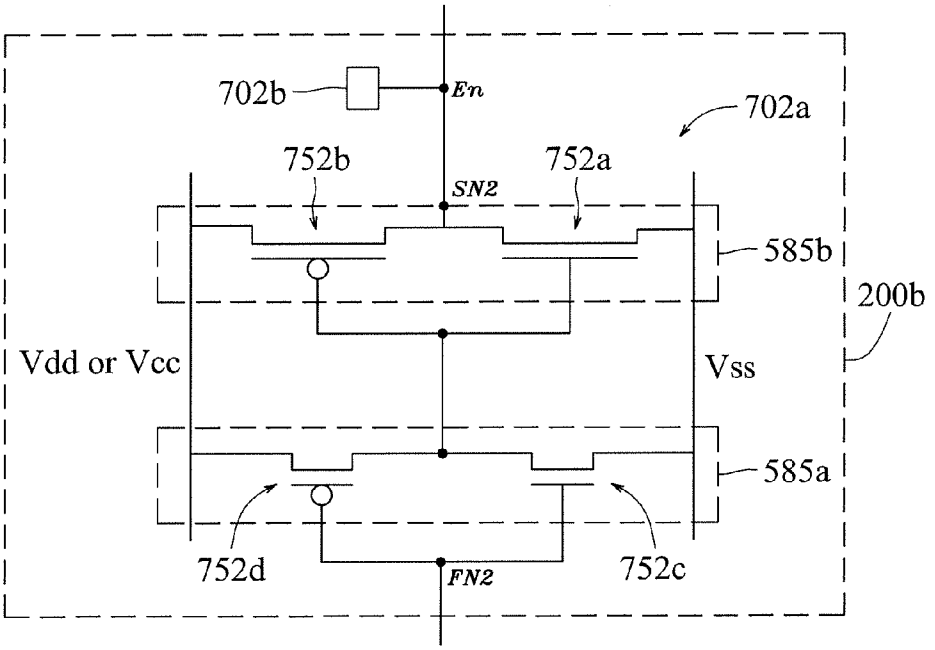
702b
En
702a
752b
752a
SN2
585b
200b
Vdd or Vcc
Vss
585a
752d
FN2
752c

Fig. 88

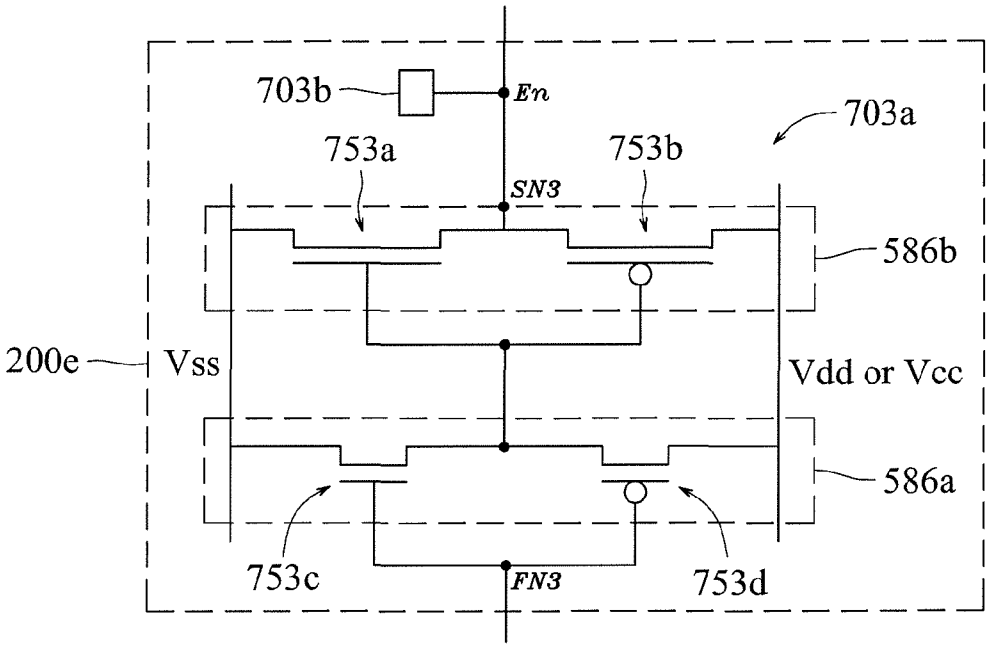
703b
En
703a
753a
753b
SN3
586b
200e
Vss
Vdd or Vcc
586a
753c
FN3
753d

Fig. 89

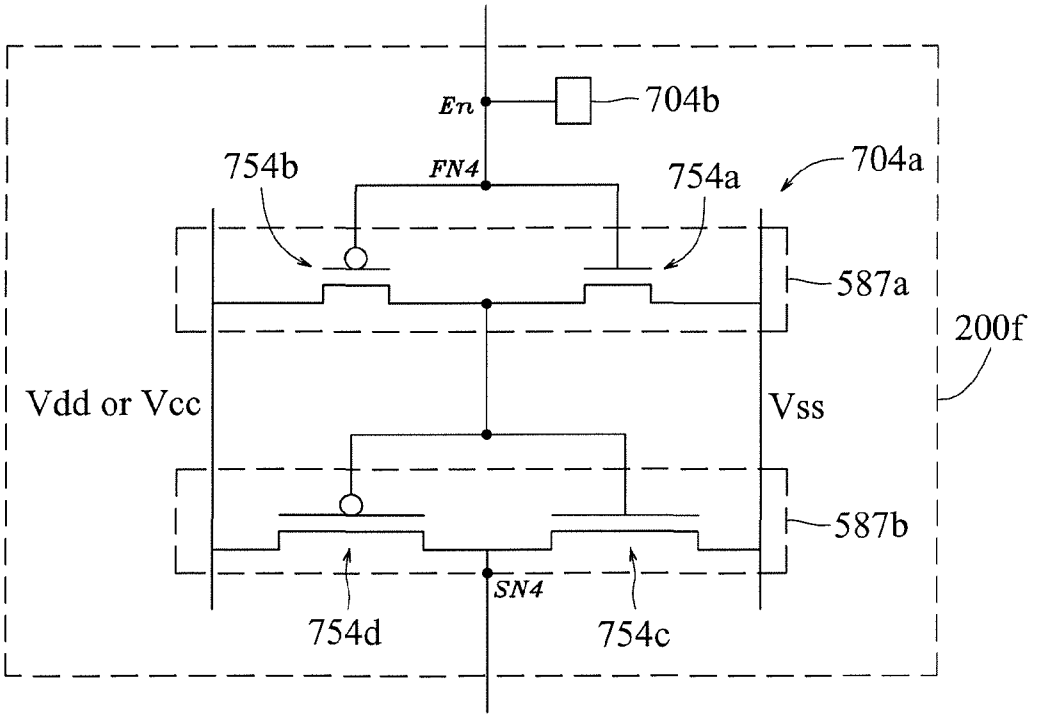
En
704b
754b
FN4
754a
704a
587a
200f
Vdd or Vcc
Vss
587b
SN4
754d
754c

Fig. 90

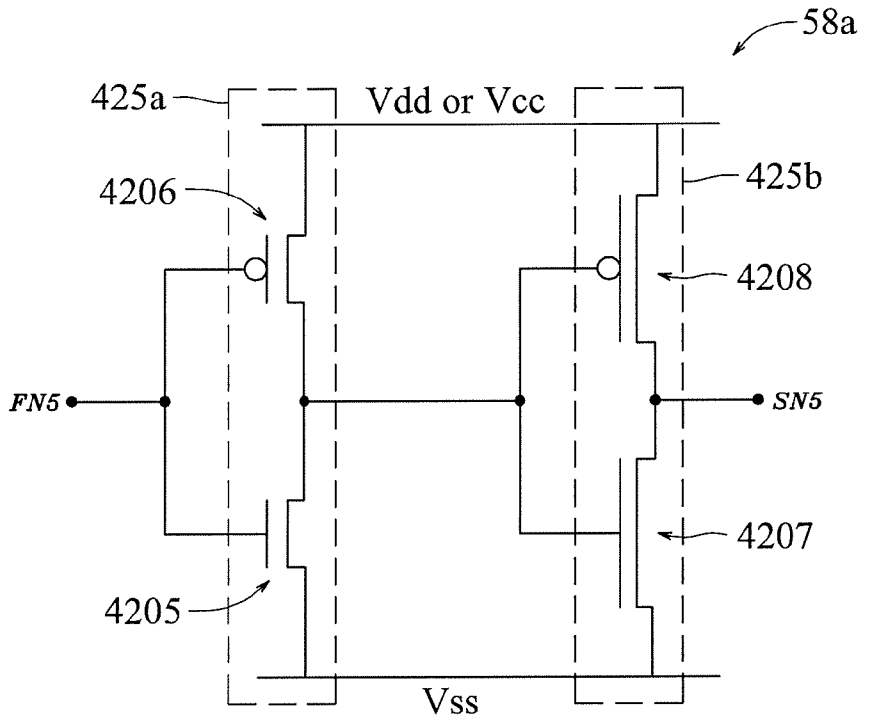
58a
425a
Vdd or Vcc
425b
4206
4208
FN5
SN5
4207
4205
Vss

Fig. 91

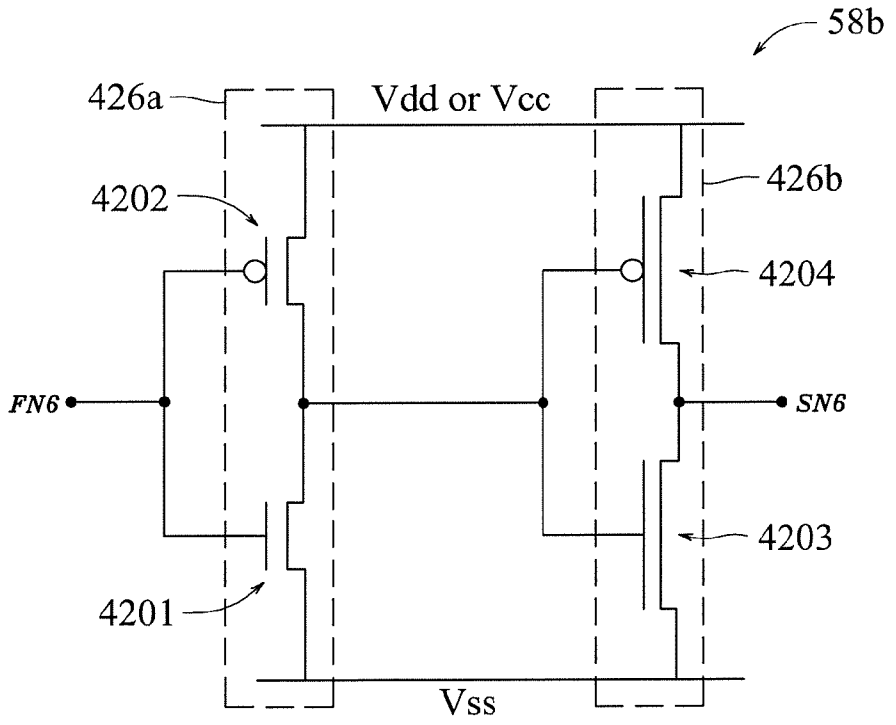
58b
426a
Vdd or Vcc
426b
4202
4204
FN6
SN6
4203
4201
Vss

Fig. 92

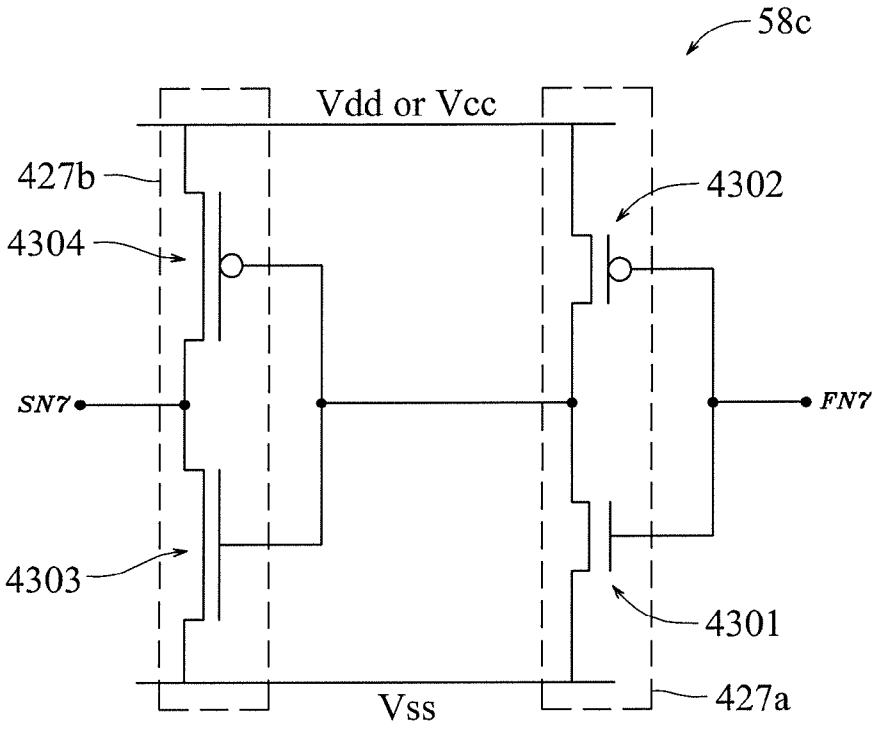
58c
Vdd or Vcc
427b
4302
4304
SN7
FN7
4303
4301
Vss
427a

Fig. 93

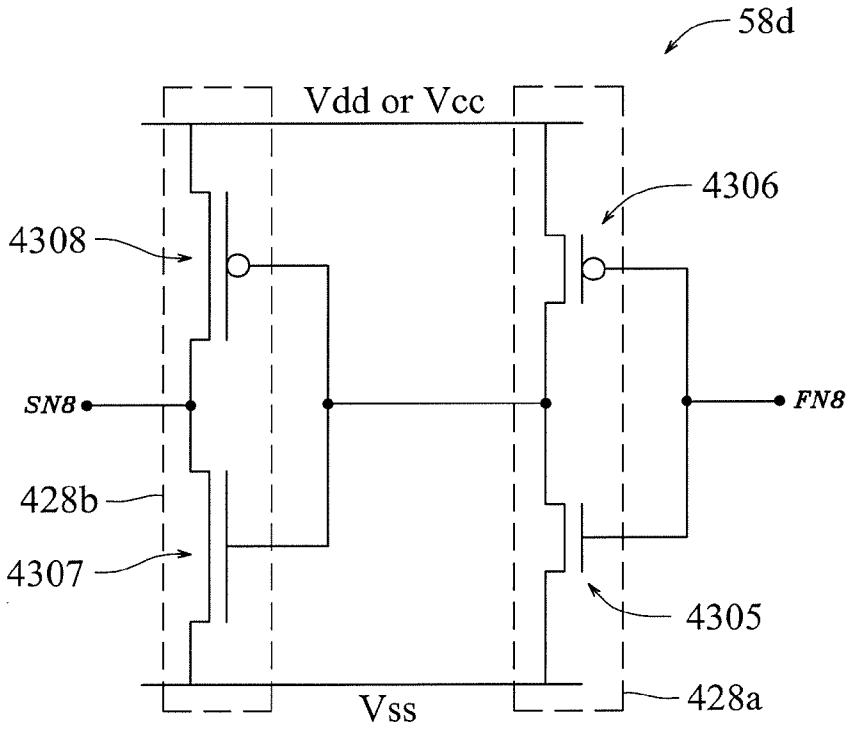
58d
Vdd or Vcc
4306
4308
SN8
FN8
428b
4307
4305
Vss
428a

Fig. 94

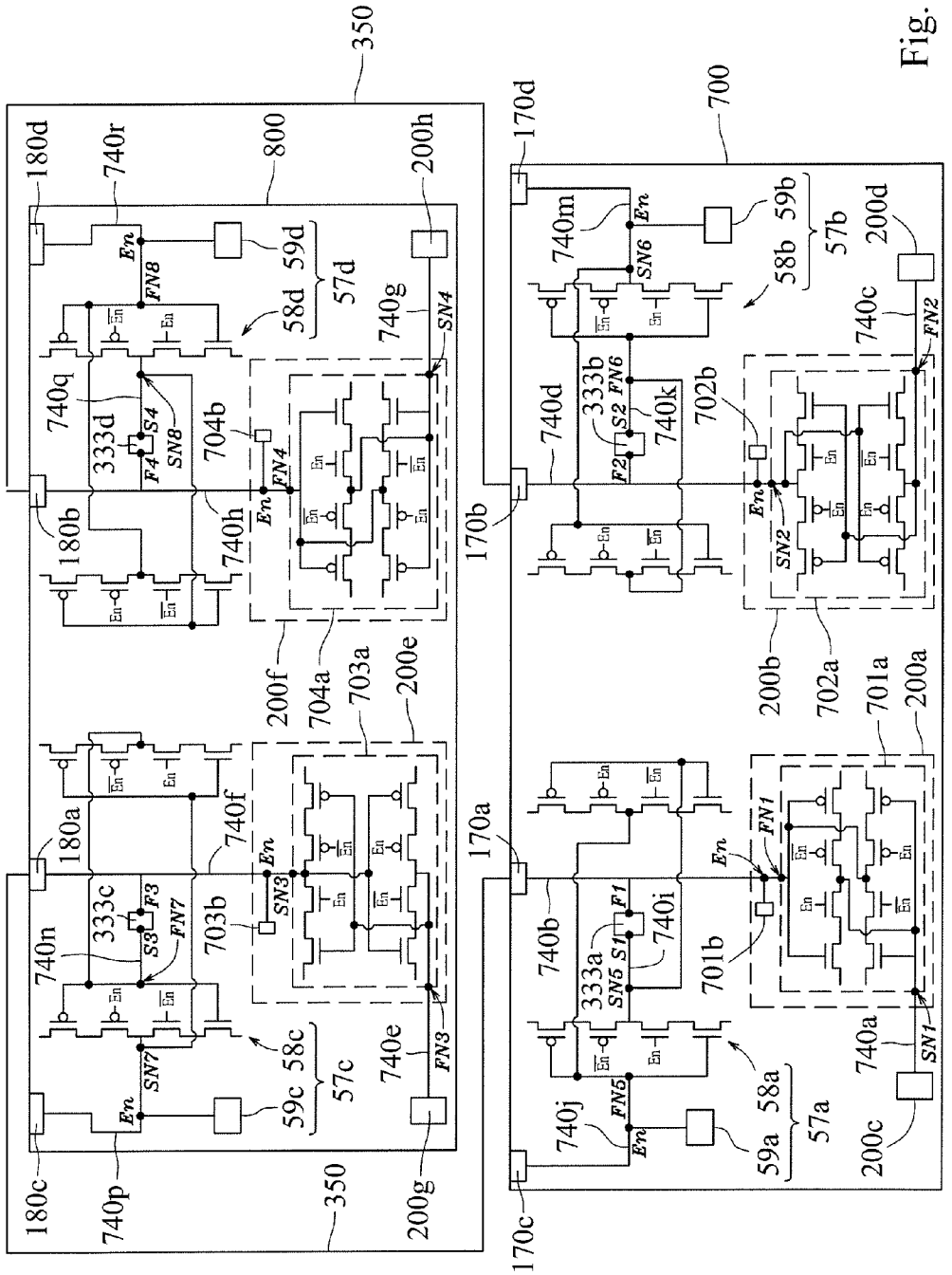
350
800
180d
740r
200h
En
FN8
59d
57d
58d
740g
SN4
740q
333d
S4
SN8
704b
F4
FN4
740h
180b
200f
704a
703a
200e
180a
740f
333c
F3
S3
FN7
703b
SN3
740n
58c
57c
59c
SN7
740e
FN3
180c
740p
200g
170b
170d
700
740m
SN6
59b
58b
57b
200d
740c
FN2
740d
333b
FN6
S2
F2
740k
702b
SN2
200b
702a
701a
200a
170a
FN1
740b
F1
740i
333a
SN5
S1
701b
740j
FN5
58a
59a
57a
740a
SN1
200c
170c

Fig. 95

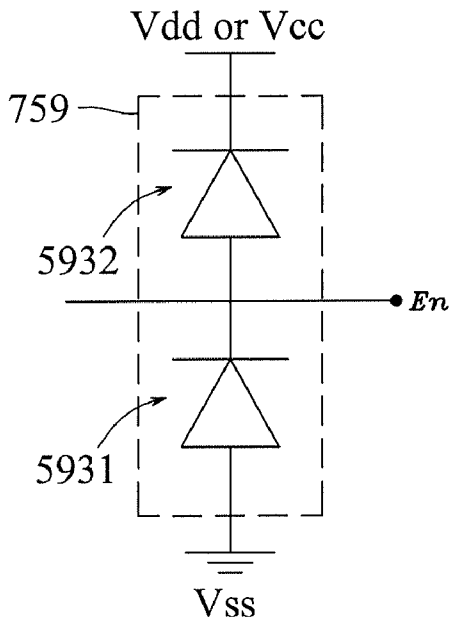

Fig. 96

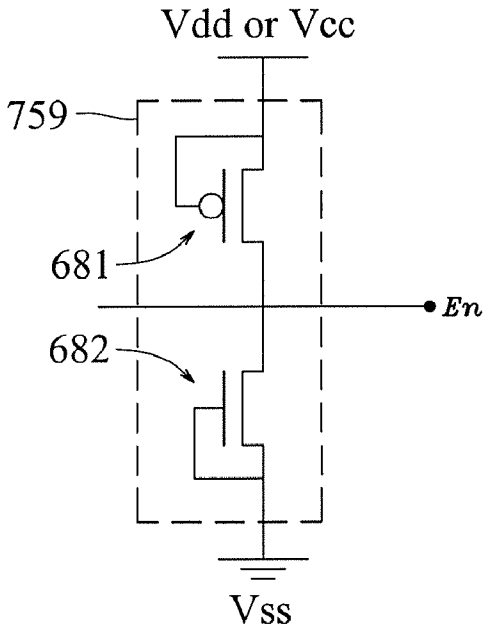

Fig. 97

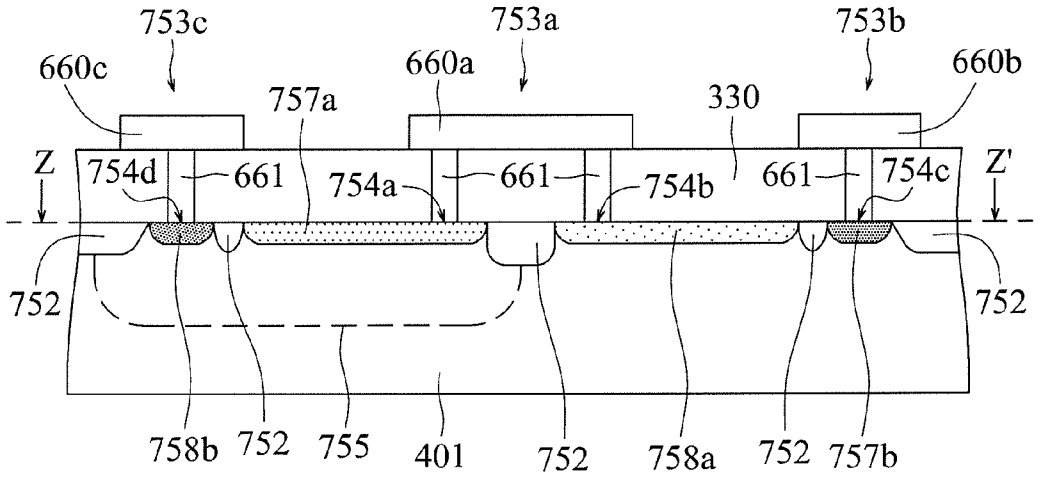
753c
753a
753b
660c
660a
660b
757a
330
Z
754d
661
754a
661
754b
661
754c
Z'
752
752
758b
752
755
401
752
758a
752
757b

Fig. 98

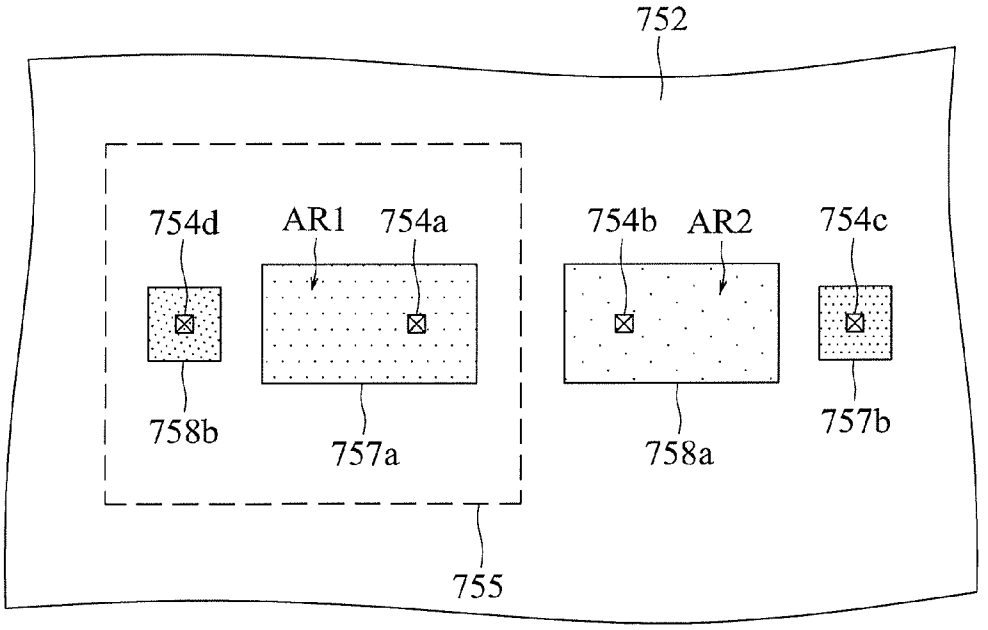
752
754d
AR1
754a
754b
AR2
754c
758b
757a
758a
757b
755

Fig. 99

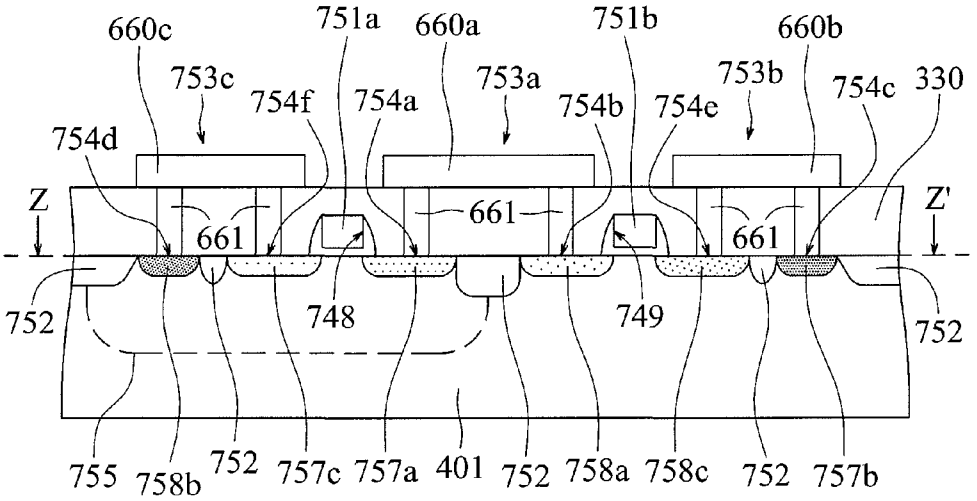

Fig. 100

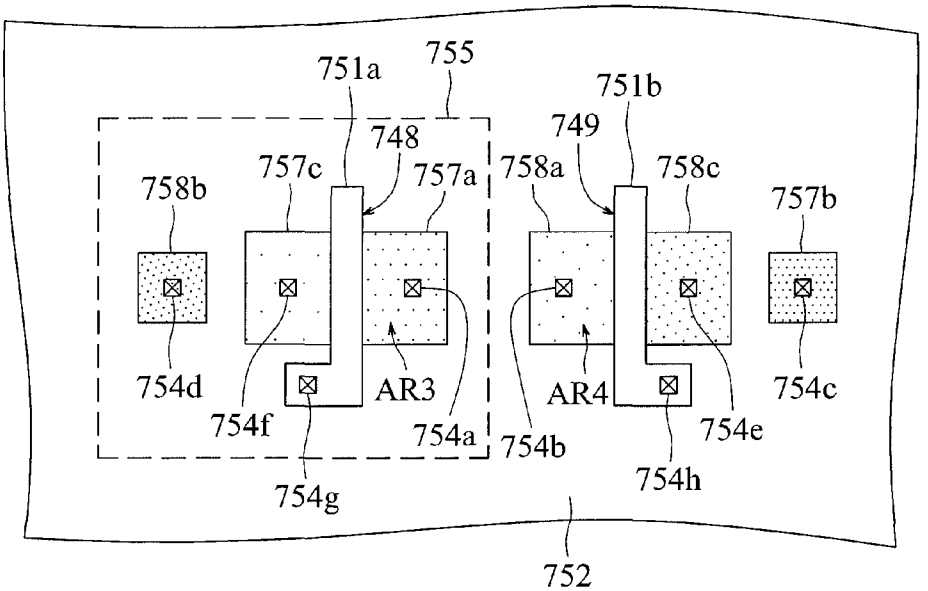

Fig. 101

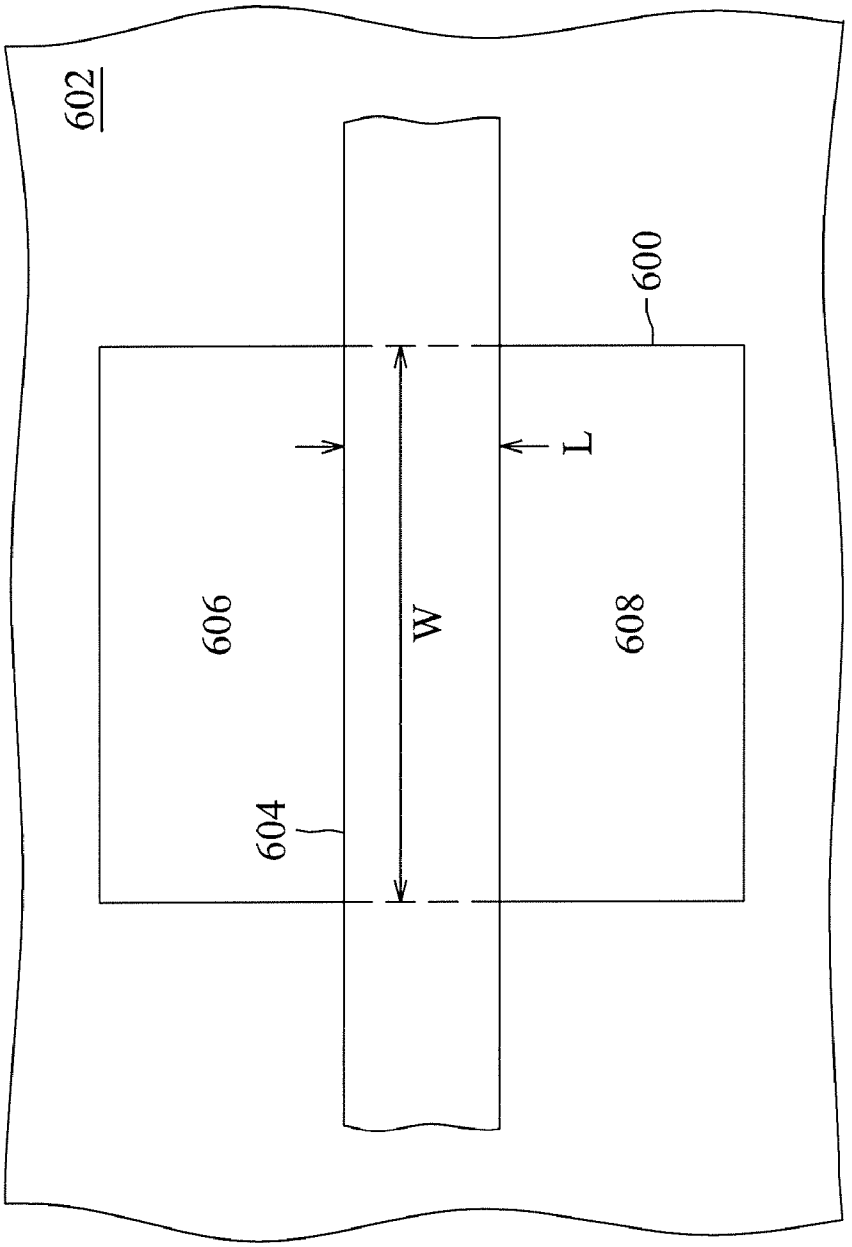

Fig. 102

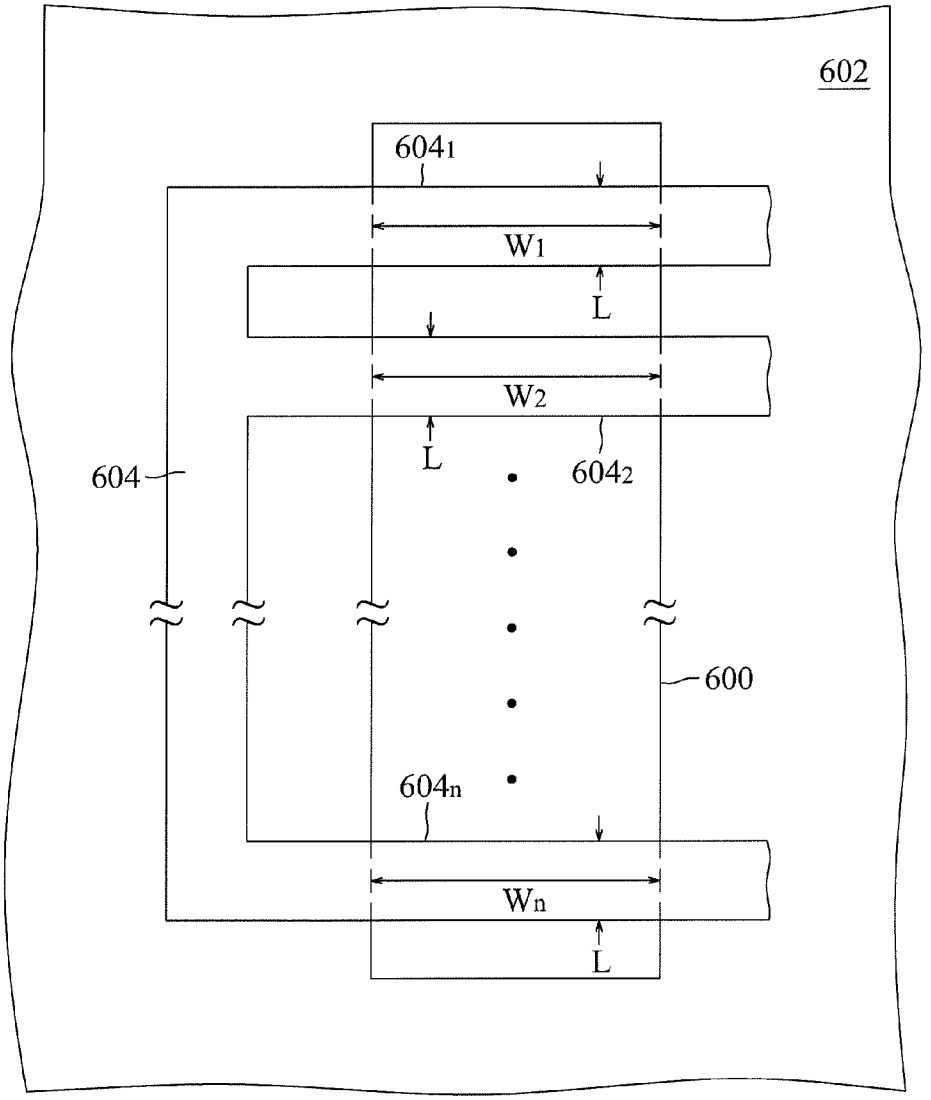

Fig. 103

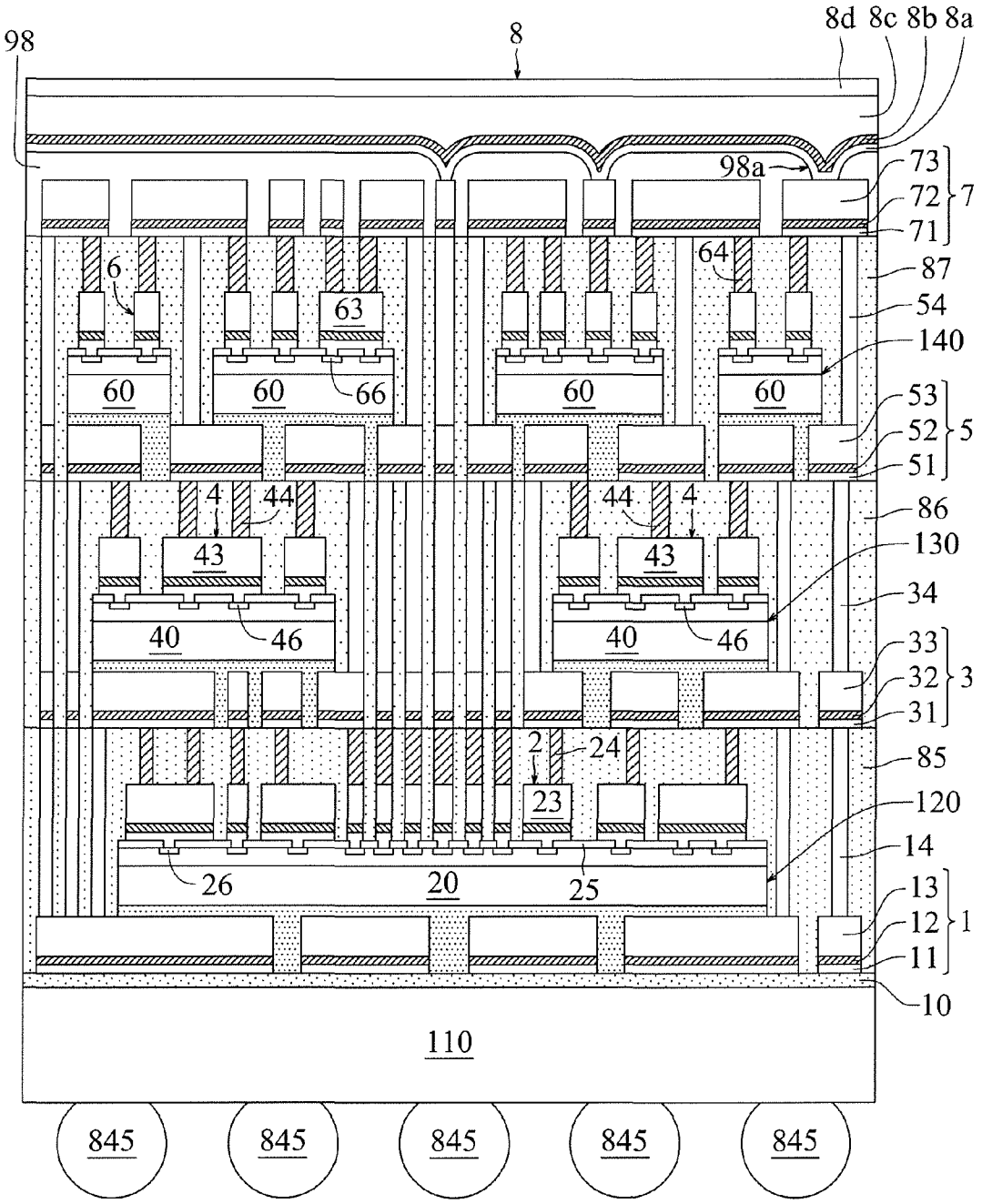
98
8
8d 8c 8b 8a
98a
73
72
71
7
6
64
87
63
54
140
60
60
66
60
60
53
52
5
51
4
44
44
4
86
43
43
130
34
40
46
40
46
33
32
3
31
2
24
85
23
120
14
26
20
25
13
12
1
11
10
110
845
845
845
845
845

Fig. 104

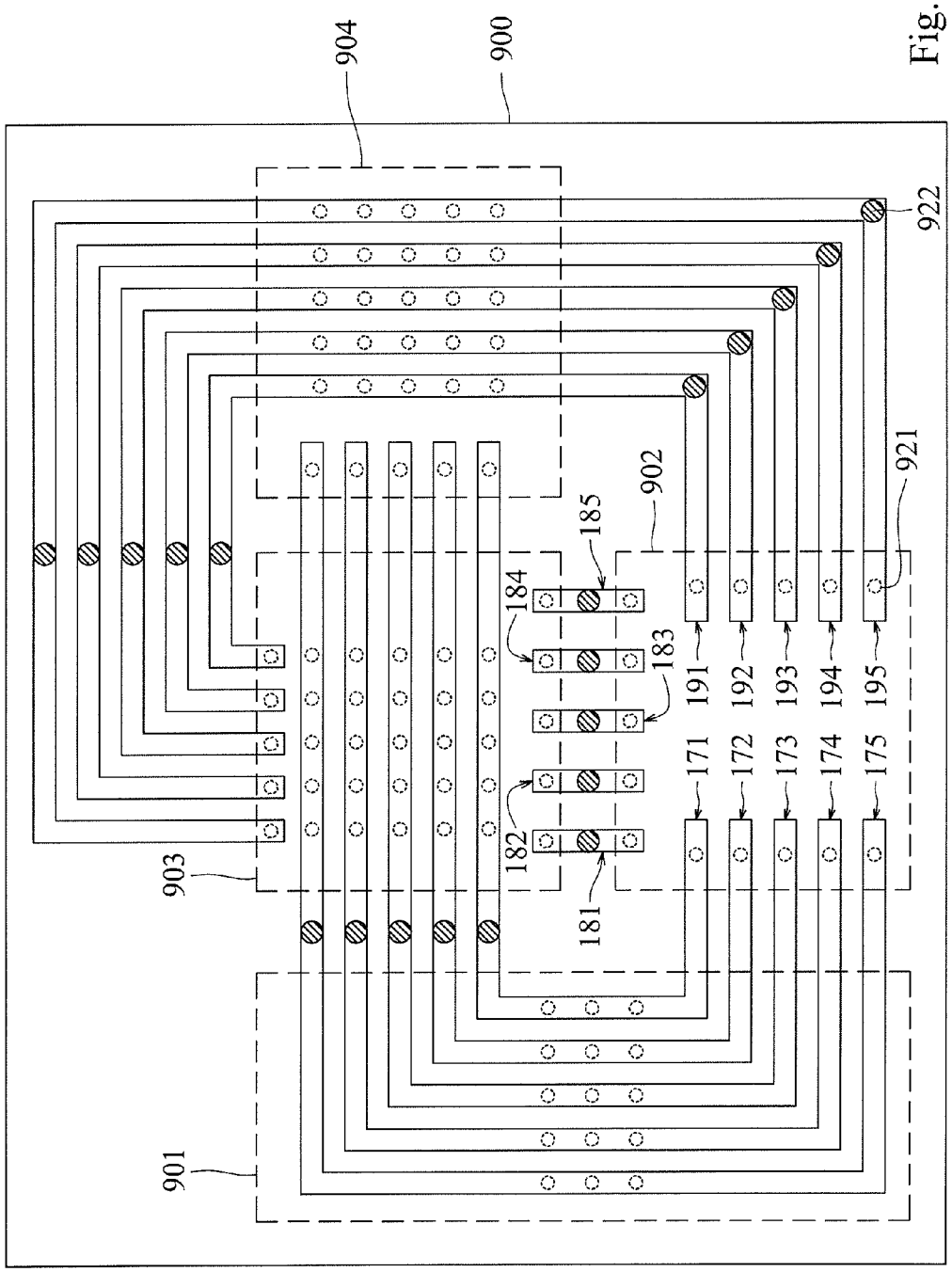
904
900
922
921
902
185
184
183
182
181
191
192
193
194
195
171
172
173
174
175
903
901

Fig. 105

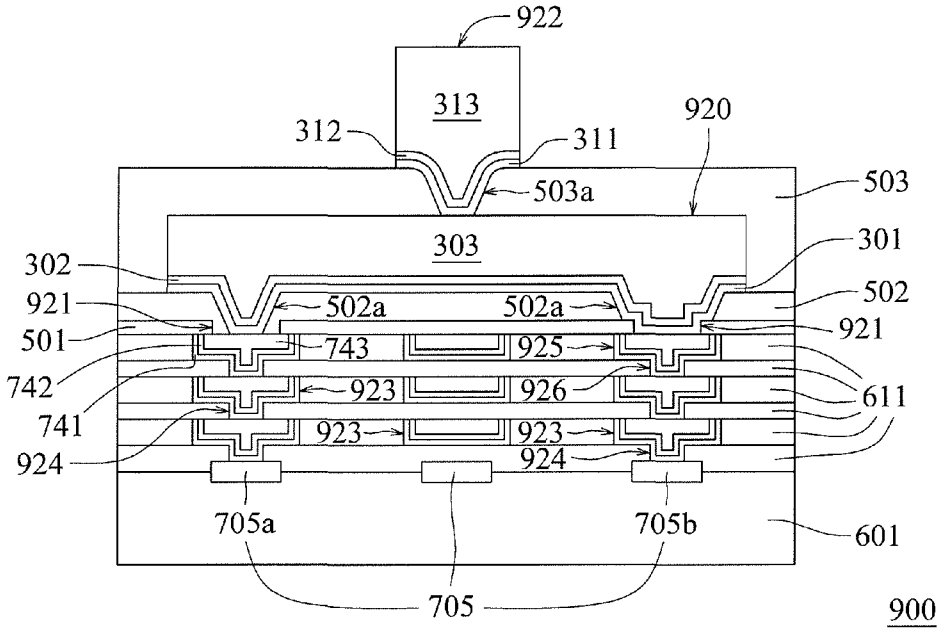

Fig. 106A

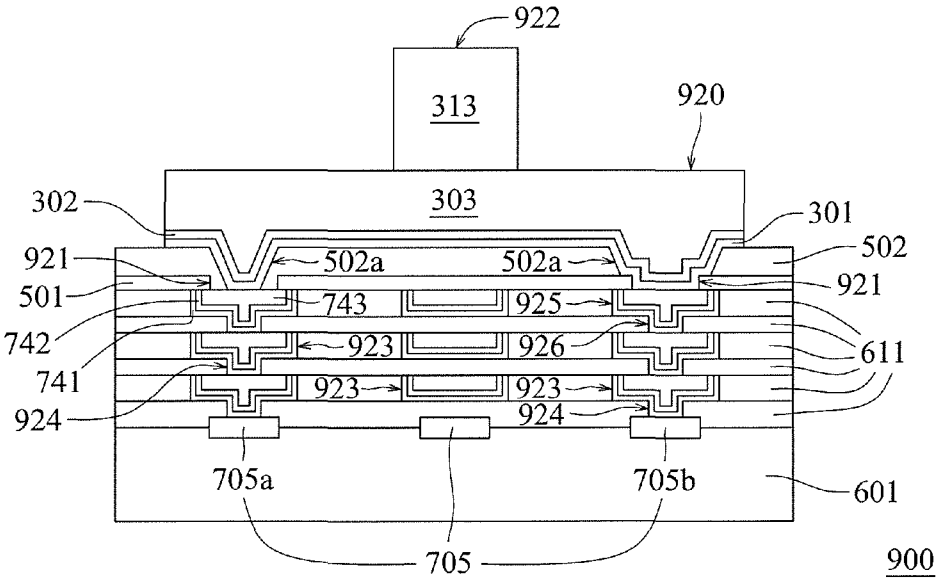

Fig. 106B

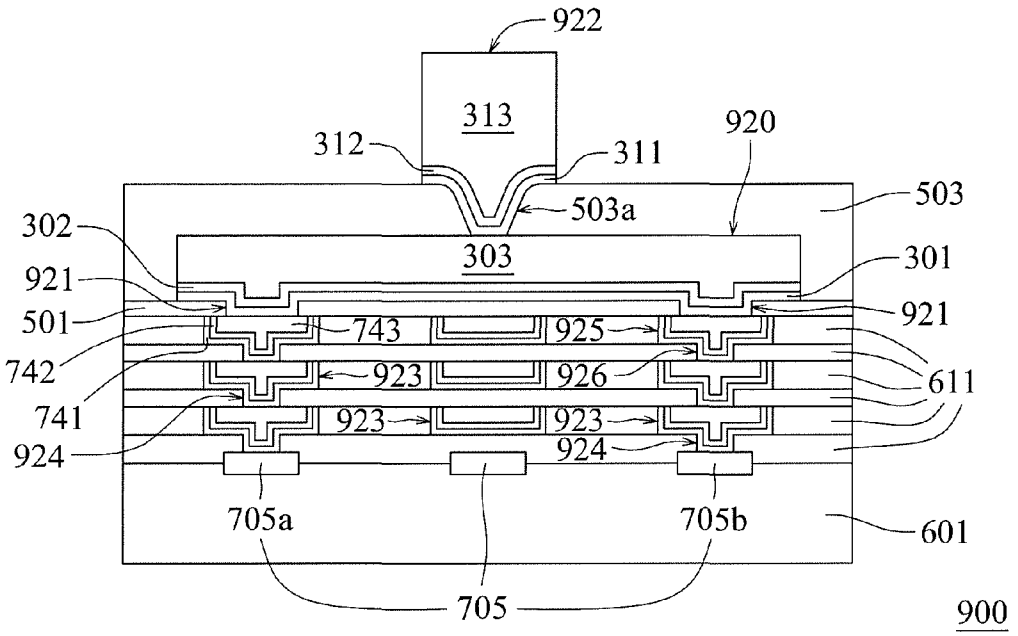

Fig. 106C

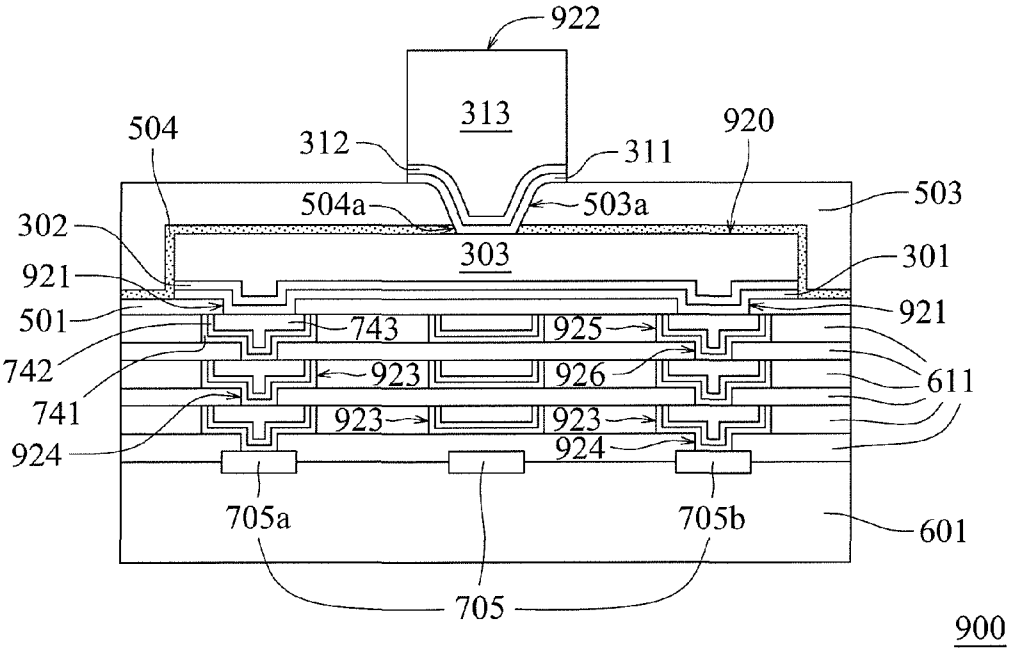

Fig. 106D

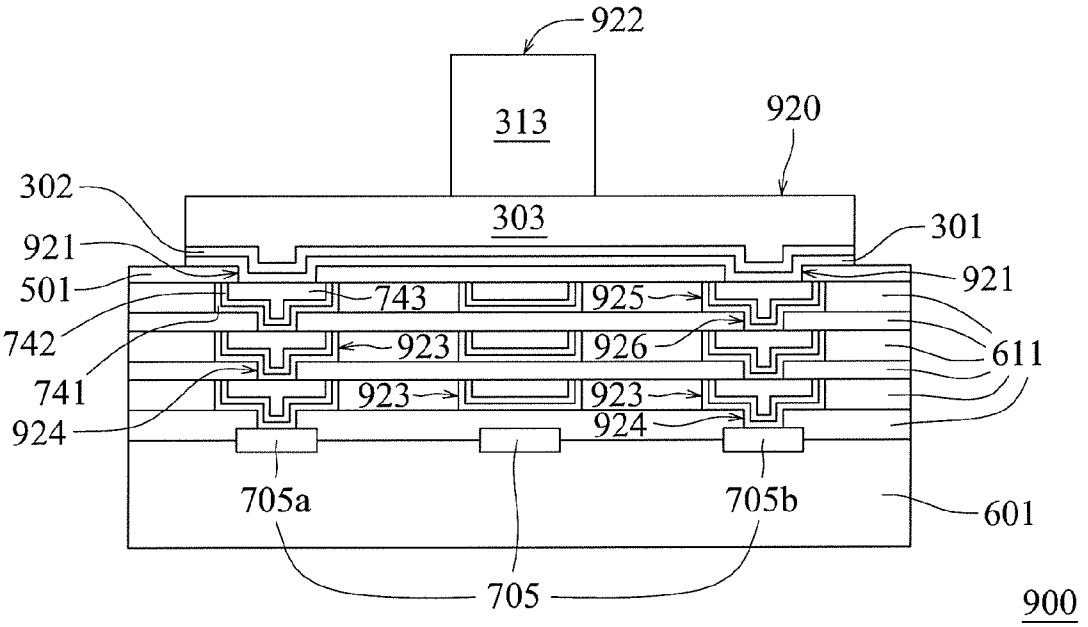
922
313
920
302
303
301
921
501
743
925
921
742
923
926
611
741
923
923
924
924
705a
705b
601
705
900

Fig. 106E

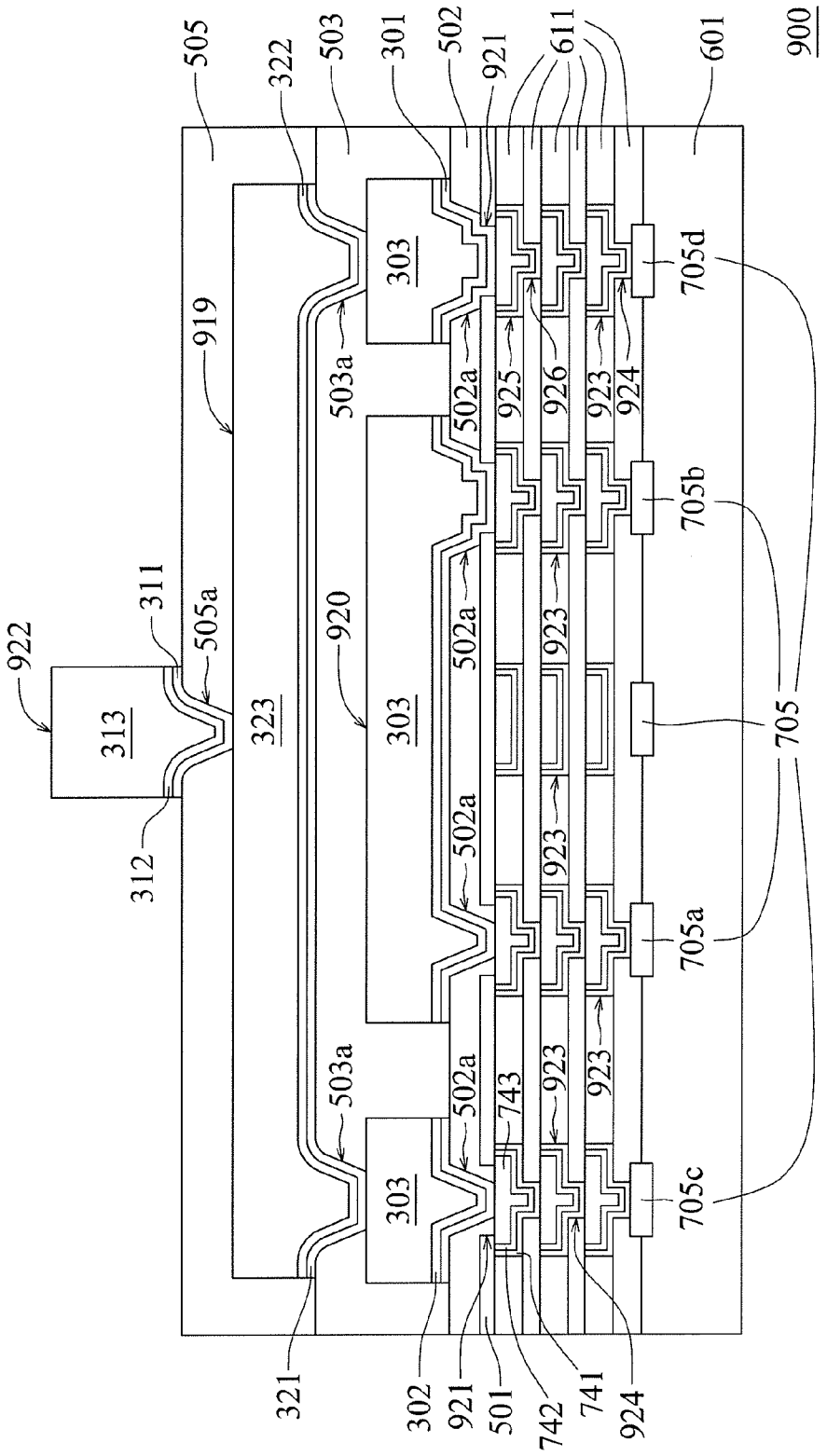
505
322
503
301
502
921
611
601
900
303
705d
919
503a
502a
925
926
923
924
705b
922
311
505a
920
313
323
705
312
705a
743
705c
321
302
501
742
741

Fig. 106F

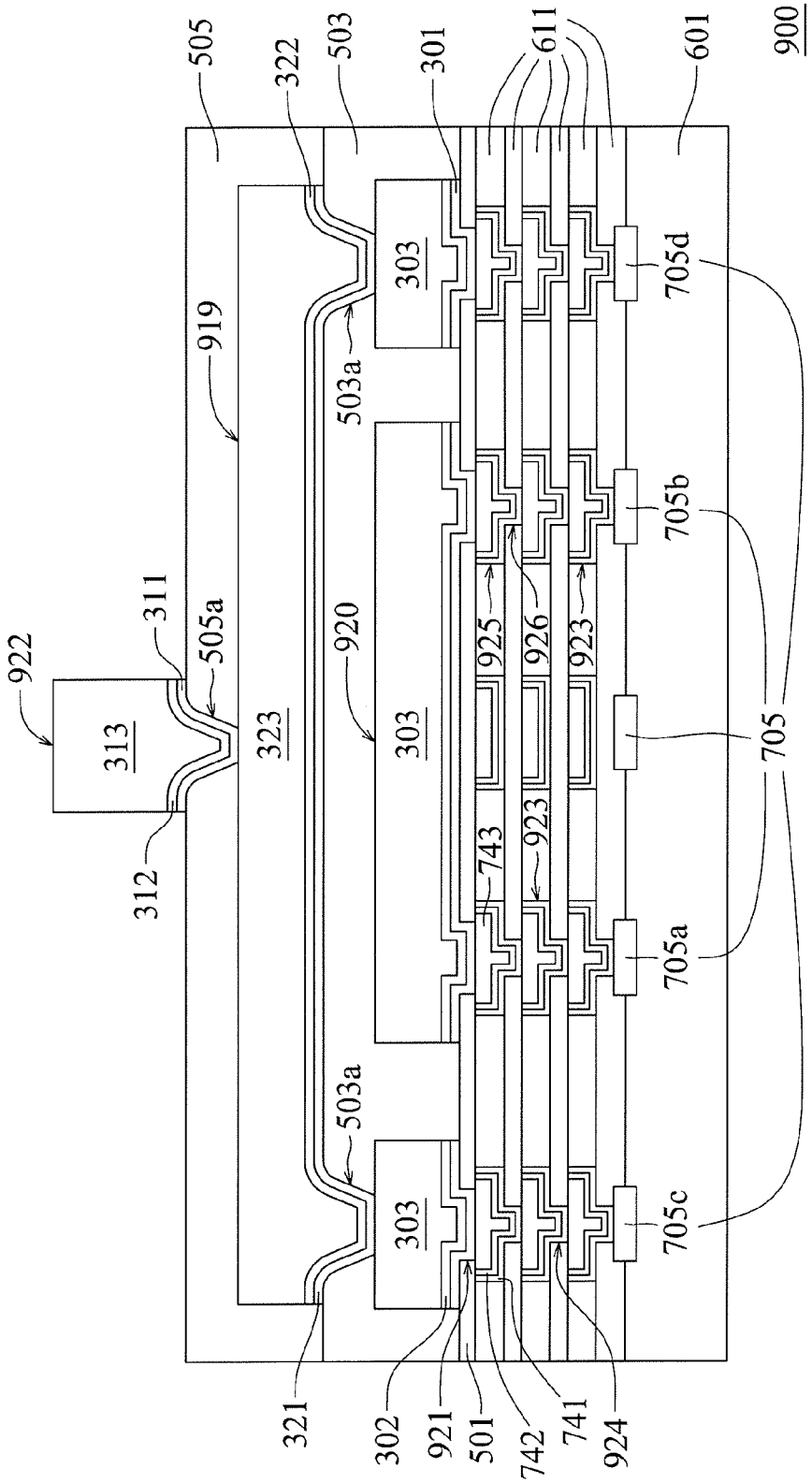
900
505
322
503
301
611
601
919
303
503a
705d
705b
705
705a
705c
922
313
311
505a
323
920
925
926
923
743
312
321
302
921
501
742
741
924

Fig. 106G

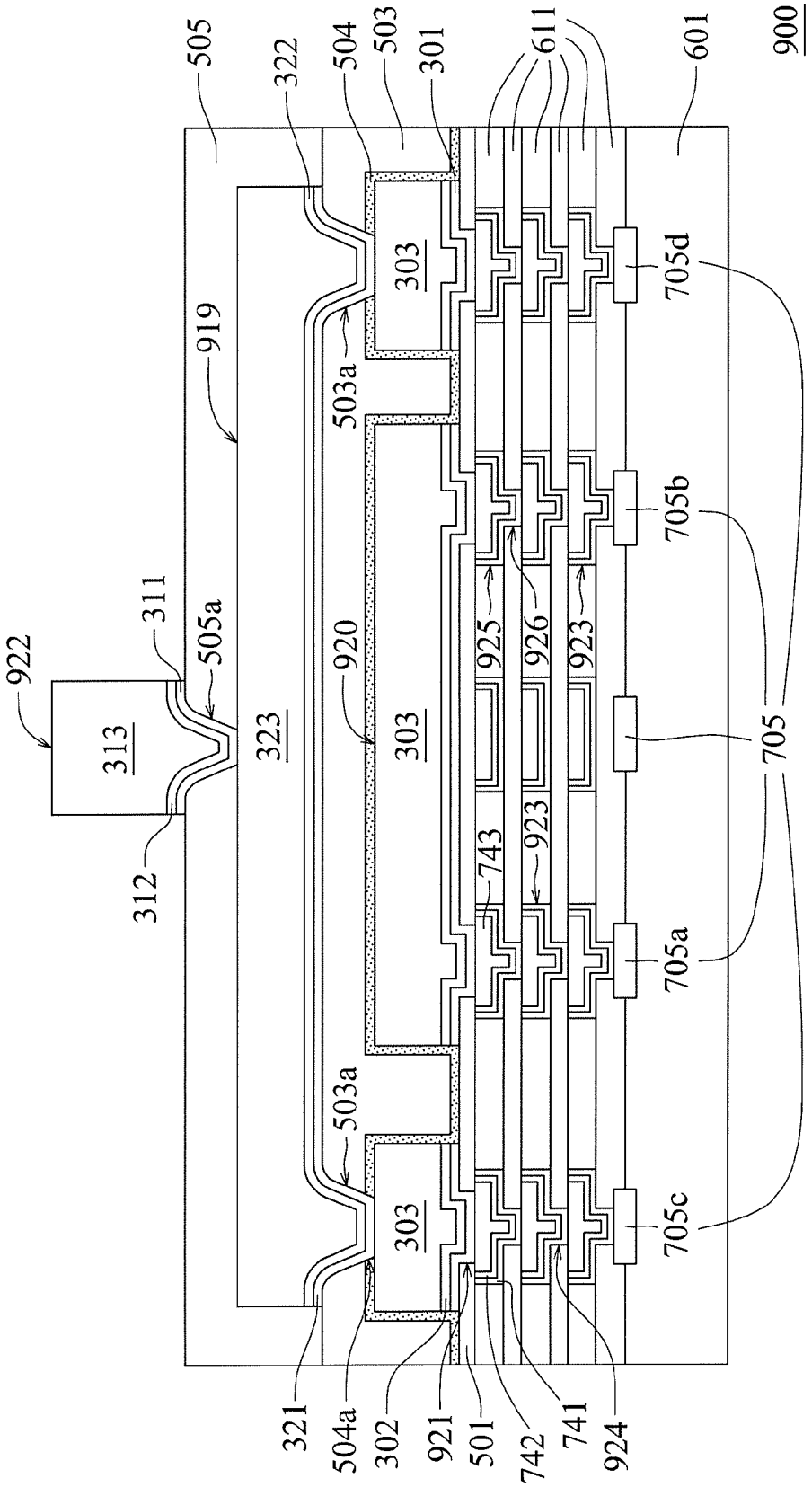
505
322
504
503
301
611
601
900
919
303
503a
705d
705b
705
705a
705c
922
311
505a
313
323
920
925
926
923
743
312
321
504a
302
921
501
742
741
924

Fig. 106H

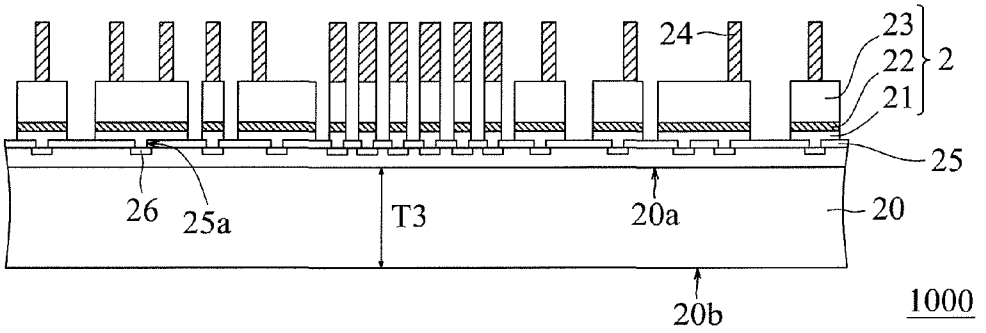

Fig. 107A

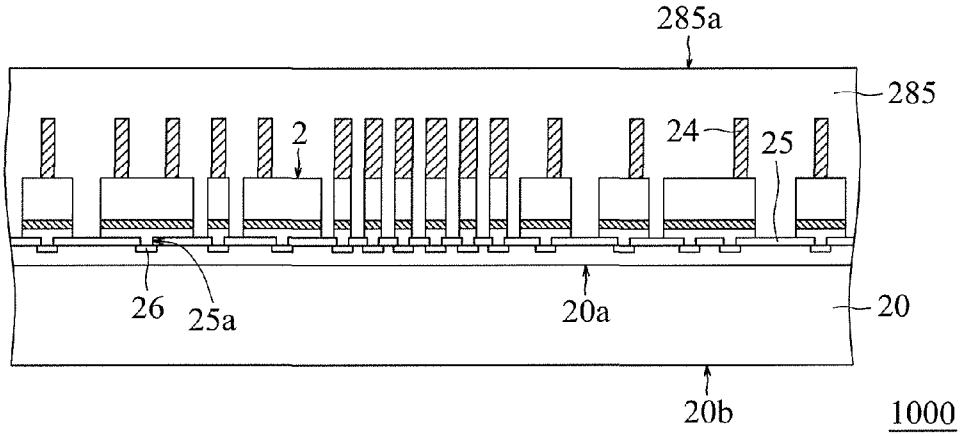

Fig. 107B

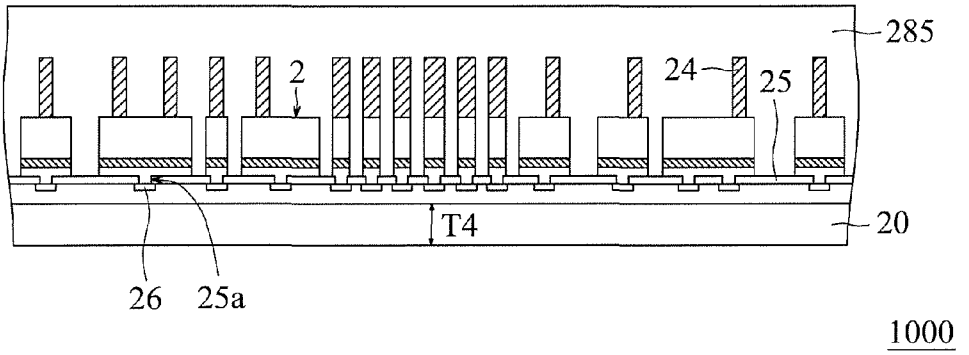

Fig. 107C

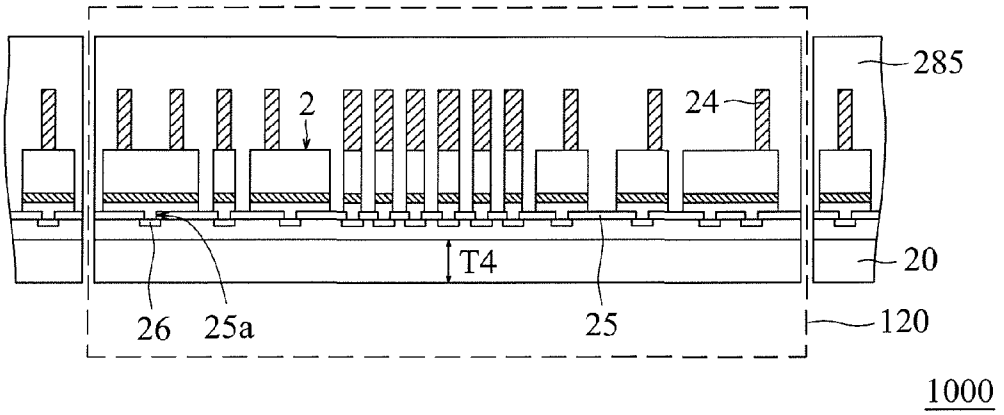

Fig. 107D

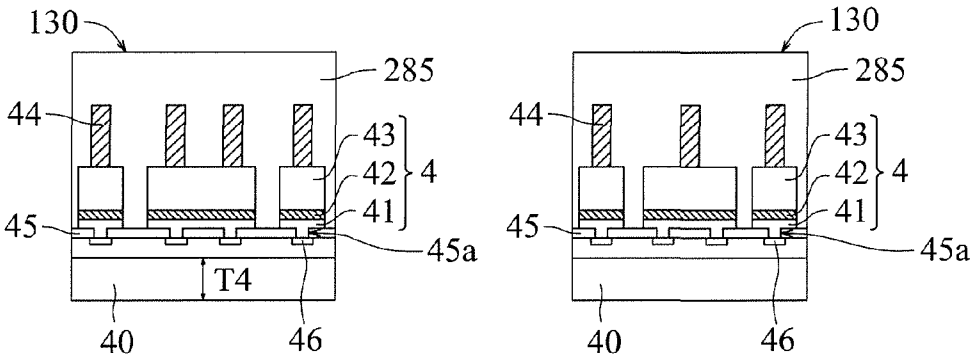

Fig. 107E

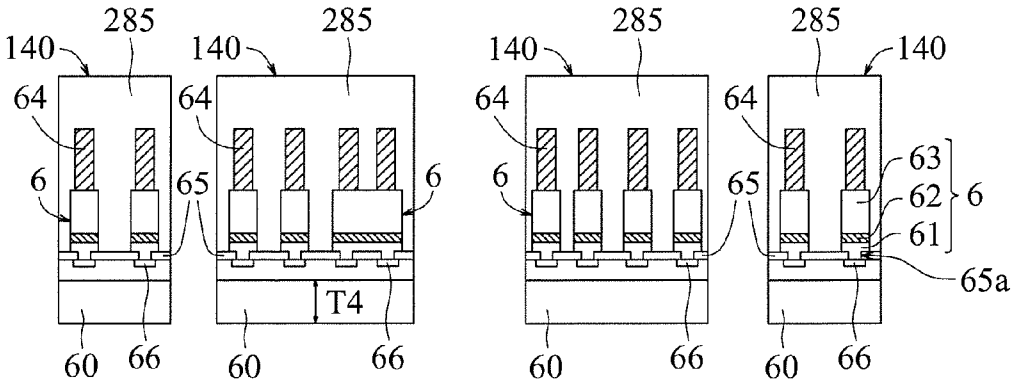

Fig. 107F

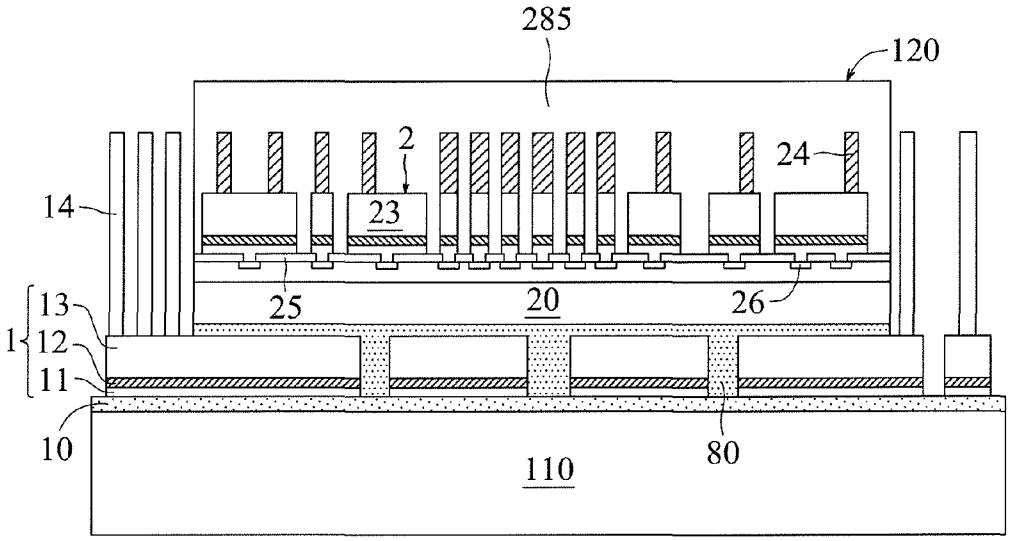

Fig. 107G

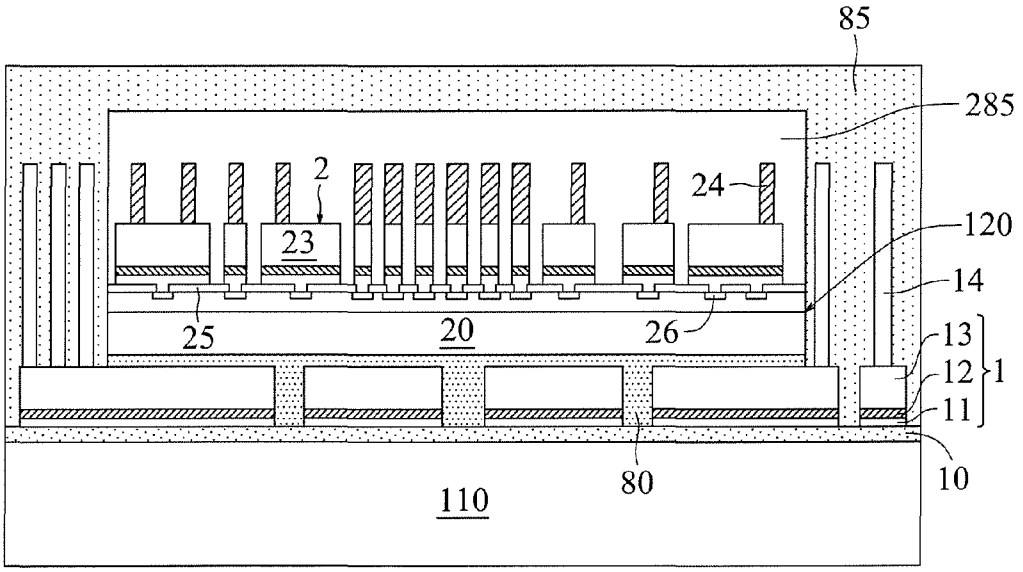

Fig. 107H

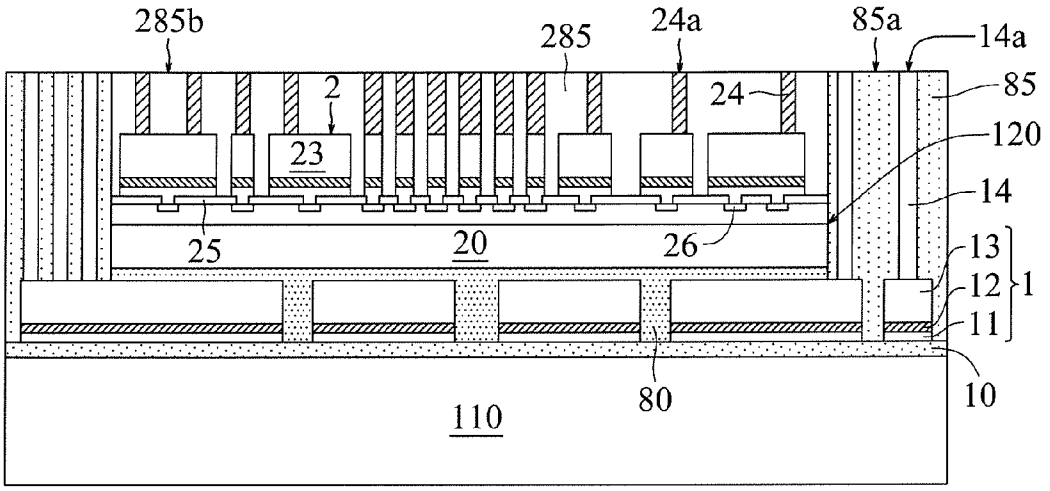

Fig. 107I

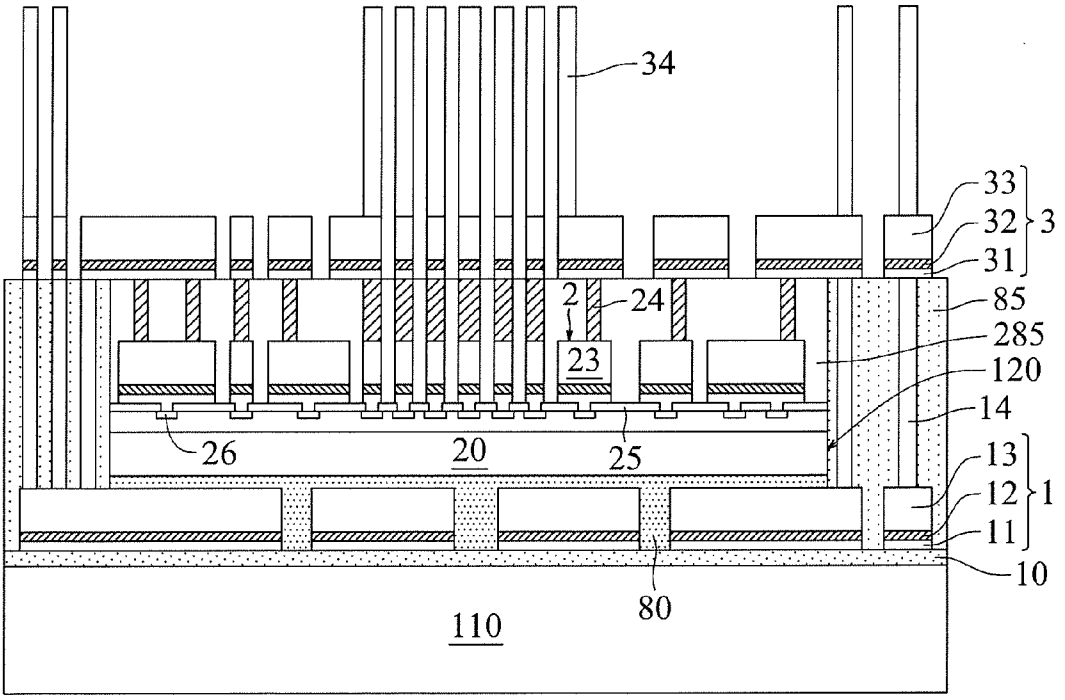

Fig. 107J

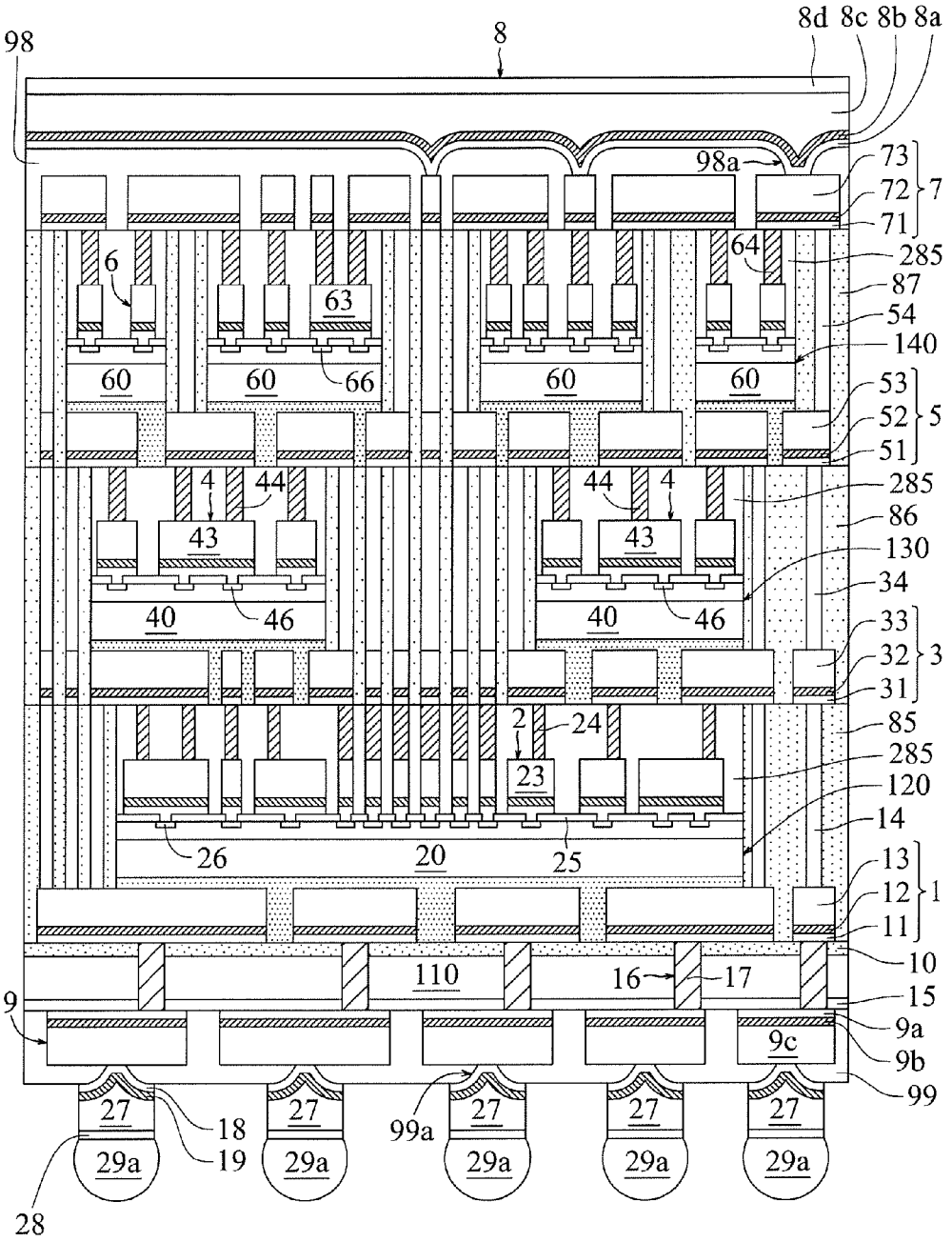
98
8
8d 8c 8b 8a
98a
73
72
71
7
6
64
285
87
54
140
63
60
60
66
60
60
53
52
51
5
4
44
44
4
285
86
43
43
130
34
40
46
40
46
33
32
31
3
2
24
85
285
23
120
14
26
20
25
13
12
11
1
10
110
16
17
15
9
9a
9c
9b
99
27
27
27
27
27
18
19
99a
29a
29a
29a
29a
29a
28

Fig. 107K

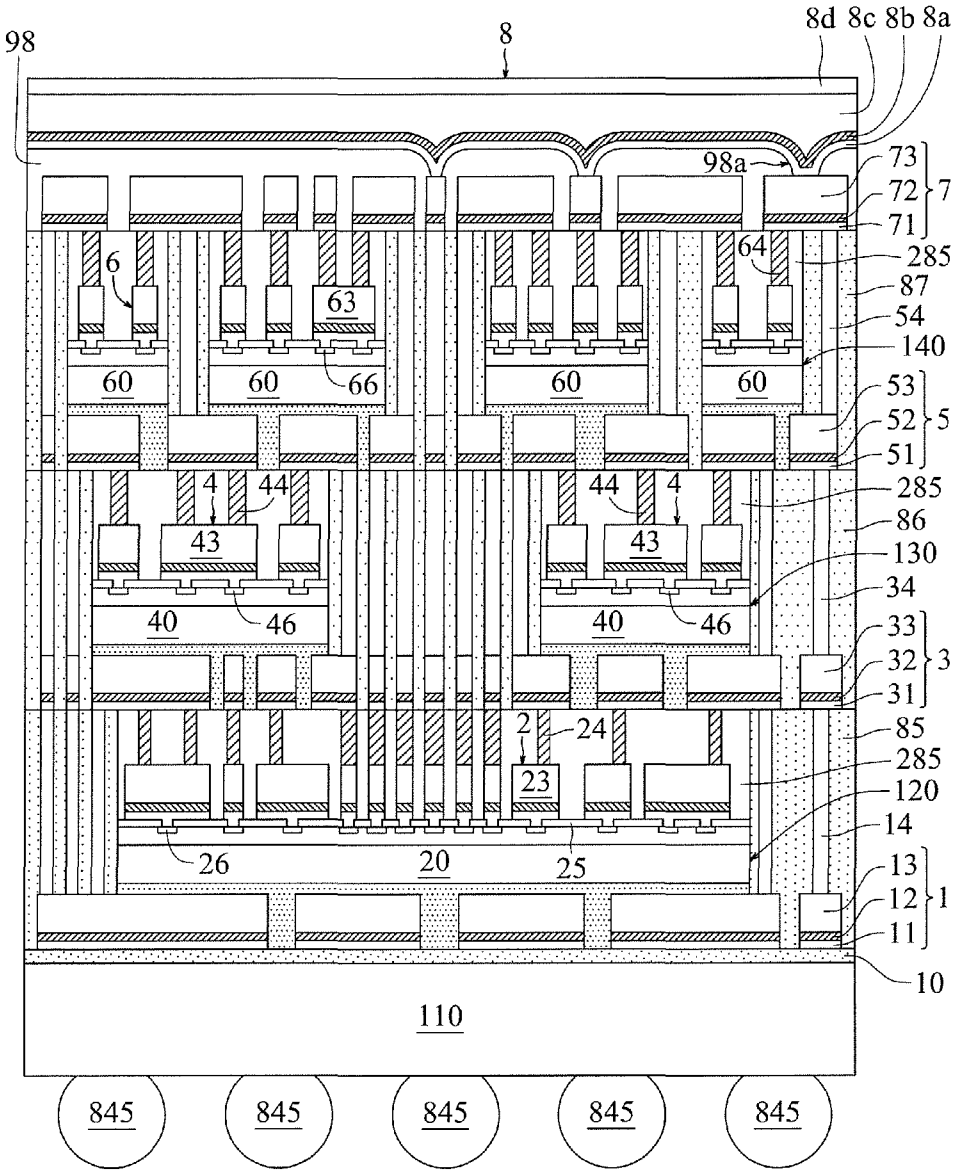
98
8
8d 8c 8b 8a
98a
73
72
71
7
6
64
285
87
54
140
63
60
60
66
60
60
53
52
51
5
4
44
44
4
285
86
43
43
130
34
40
46
40
46
33
32
31
3
2
24
85
285
23
120
14
26
20
25
13
12
11
1
10
110
845
845
845
845
845

Fig. 107L

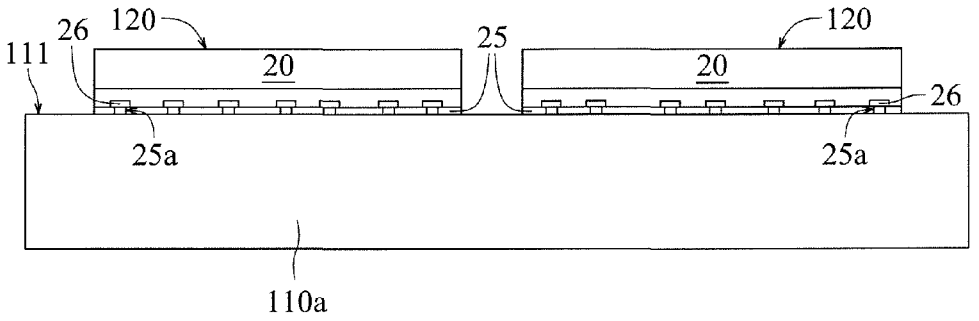

Fig. 108A

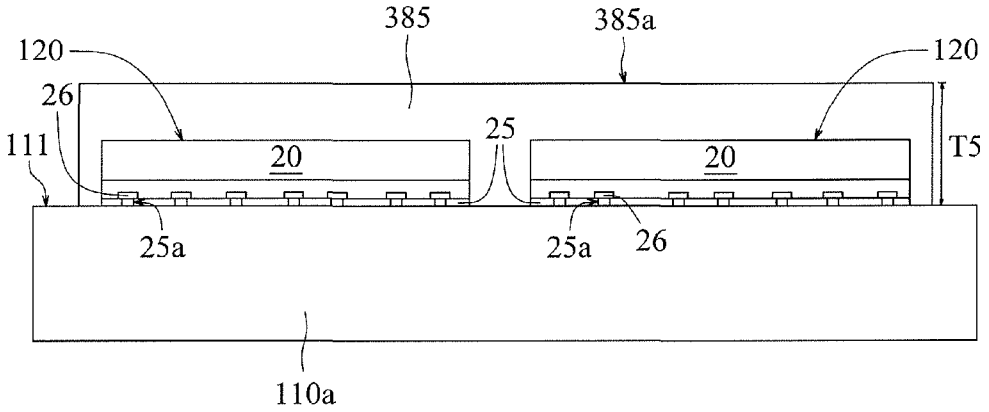

Fig. 108B

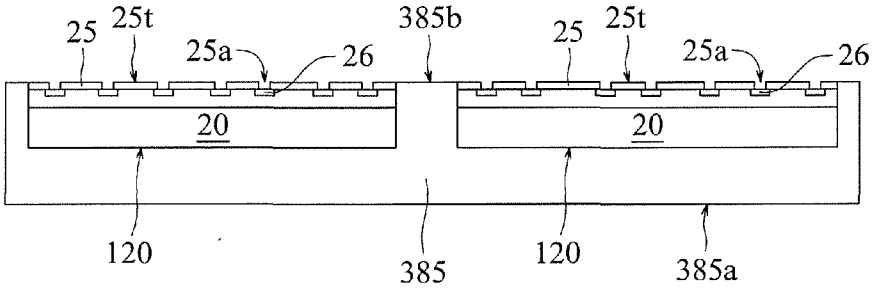

Fig. 108C

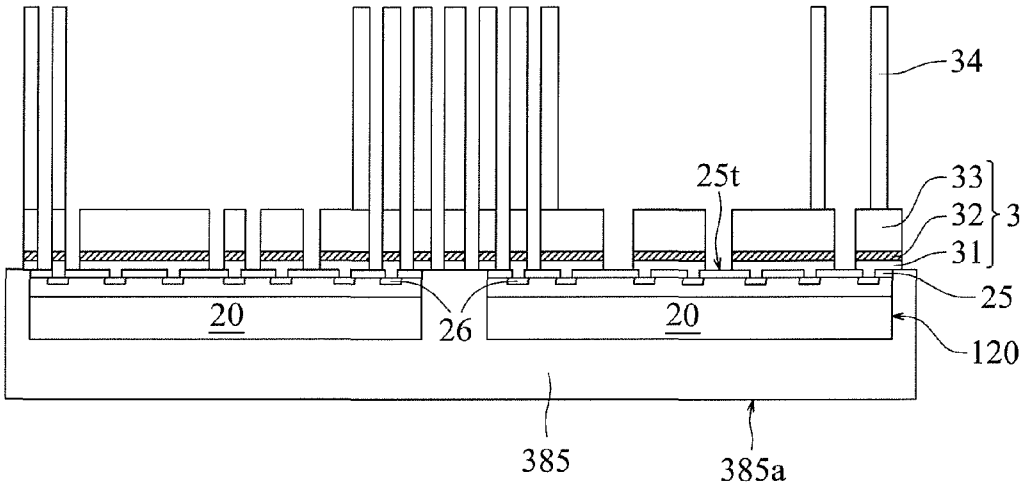

Fig. 108D

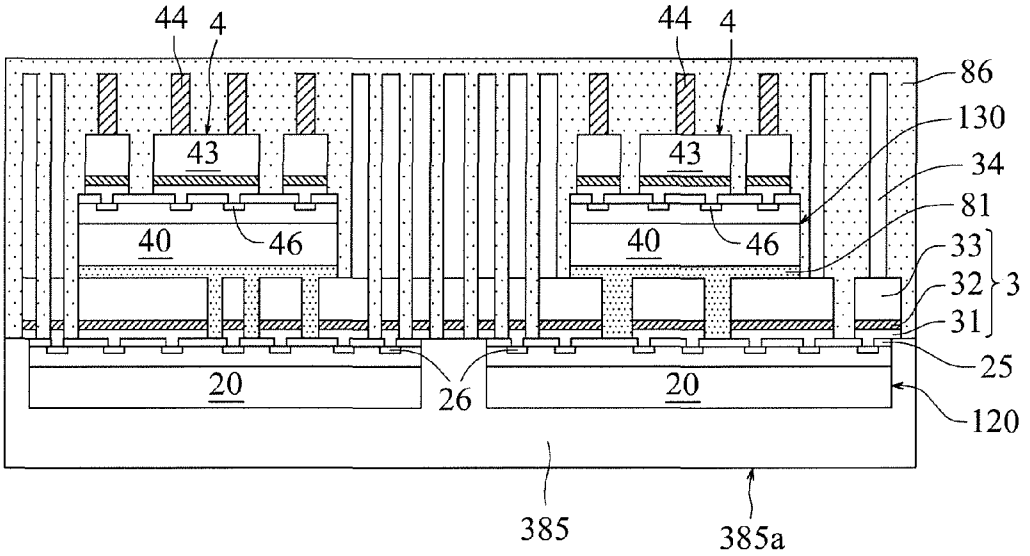

Fig. 108E

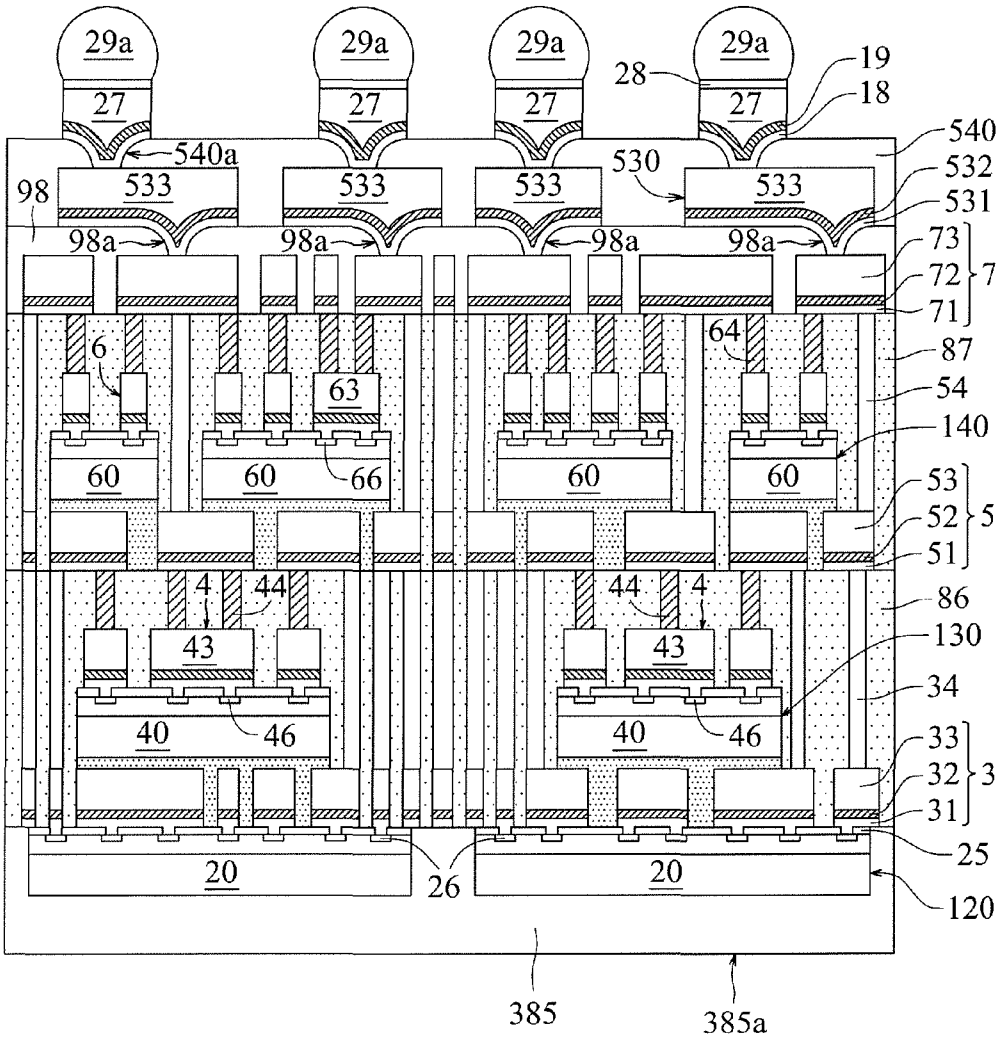
29a
29a
29a
29a
28
19
18
27
27
27
27
540
540a
530
532
533
533
533
533
531
98
98a
98a
98a
98a
73
72
7
71
6
64
87
63
54
140
60
60
66
60
60
53
52
5
51
4
44
44
4
86
43
43
130
34
40
46
40
46
33
32
3
31
25
20
26
20
120
385
385a

Fig. 108F

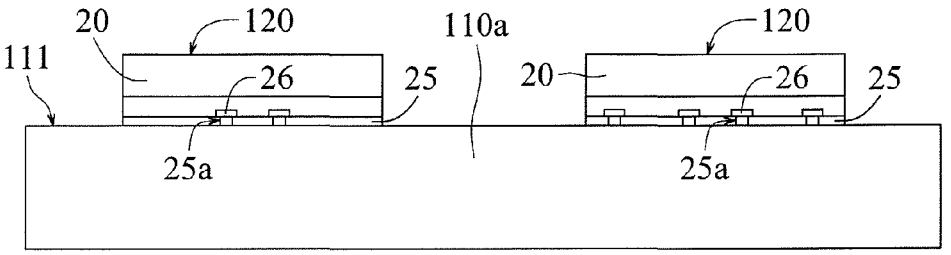

Fig. 109A

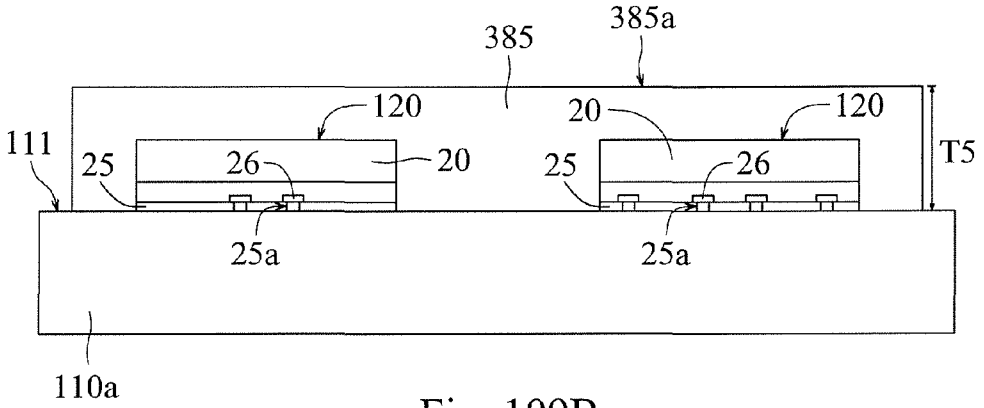

Fig. 109B

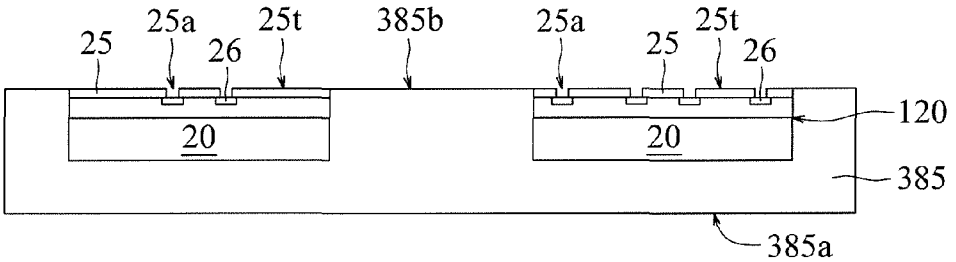

Fig. 109C

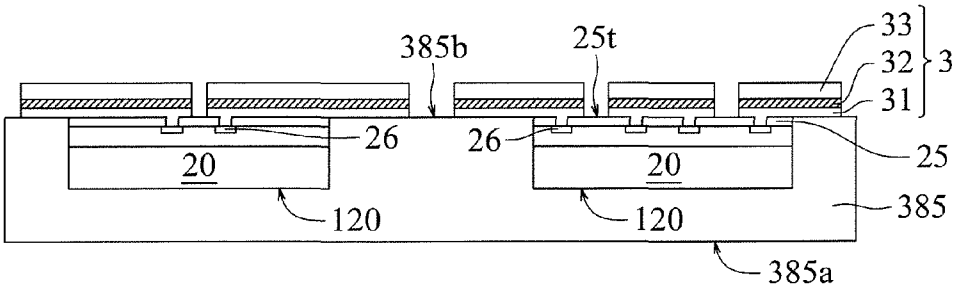

Fig. 109D

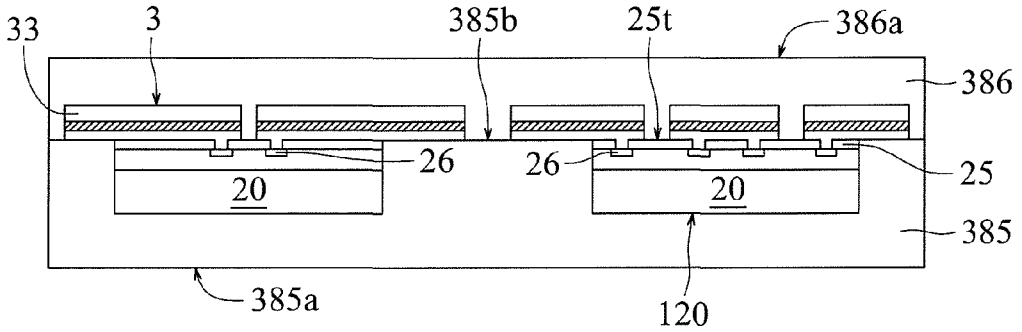

Fig. 109E

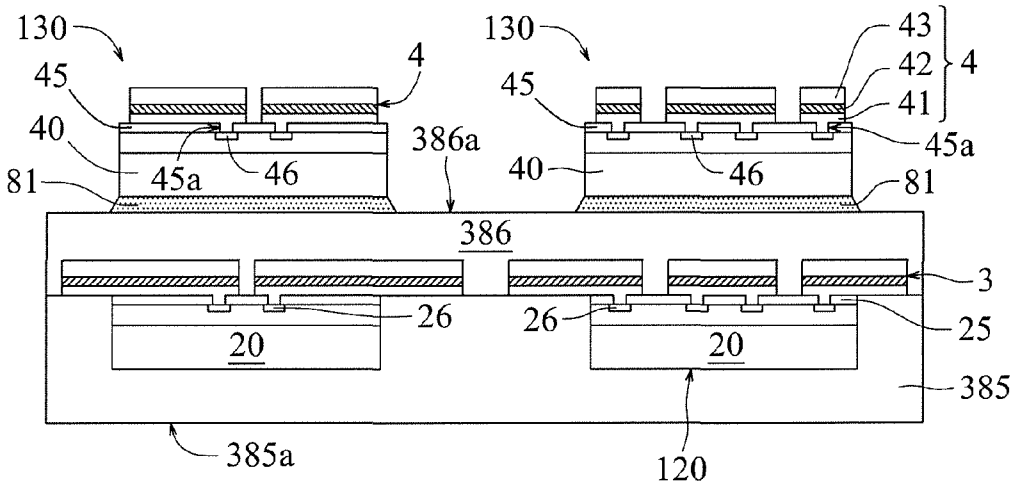

Fig. 109F

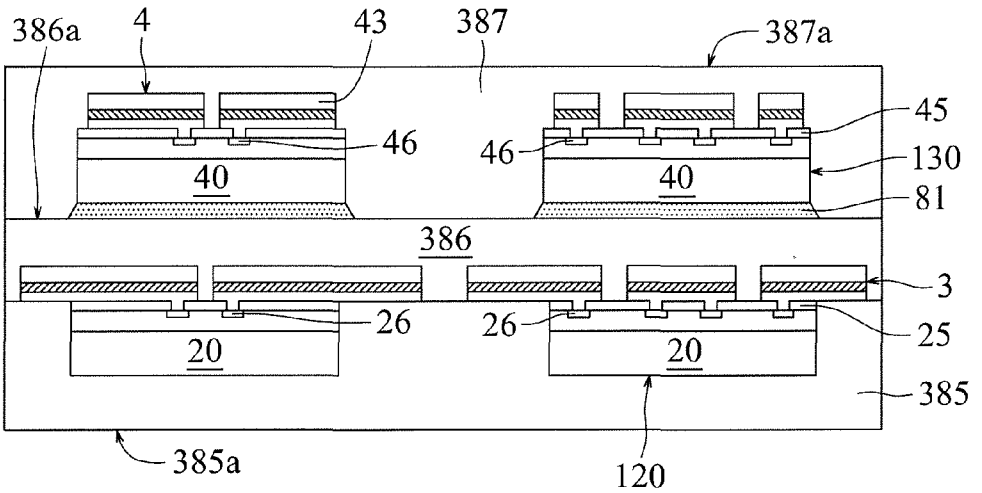

Fig. 109G

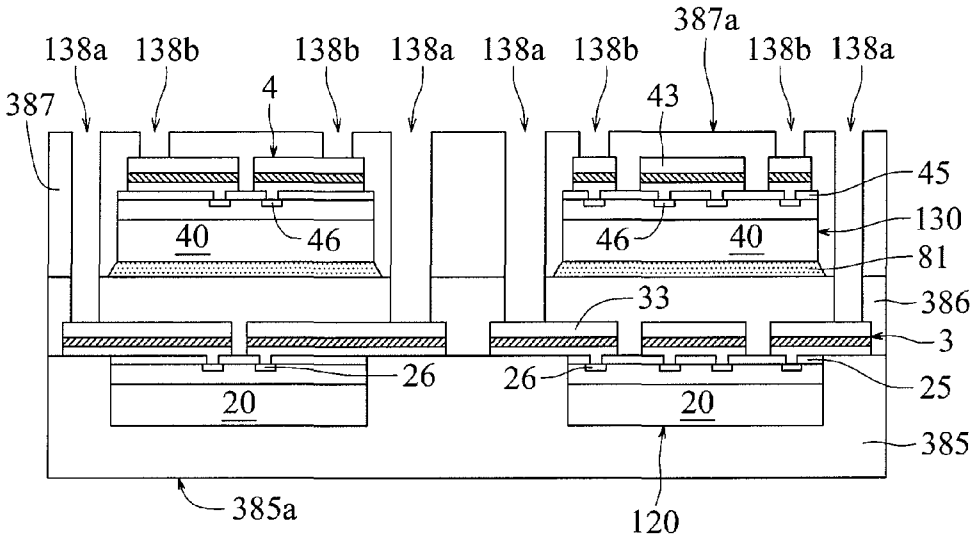

Fig. 109H

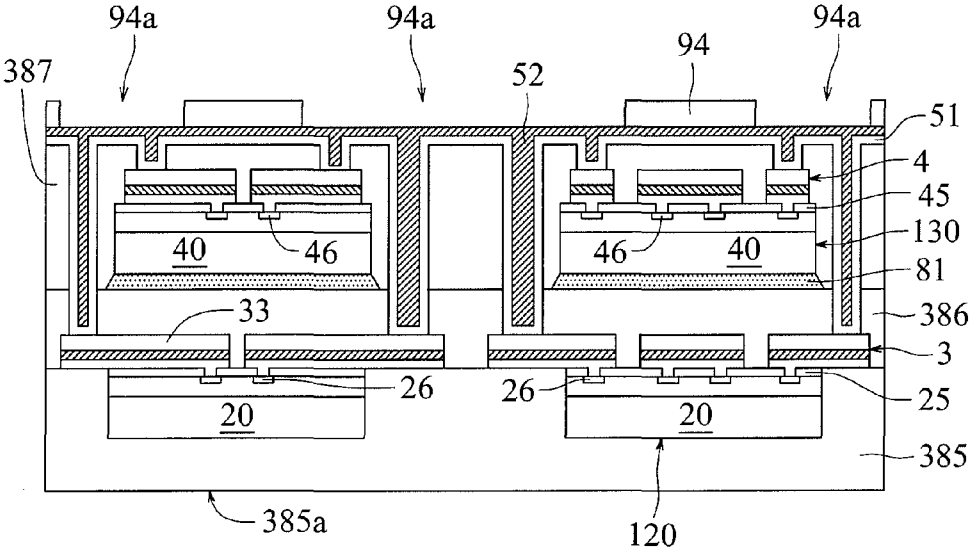

Fig. 109I

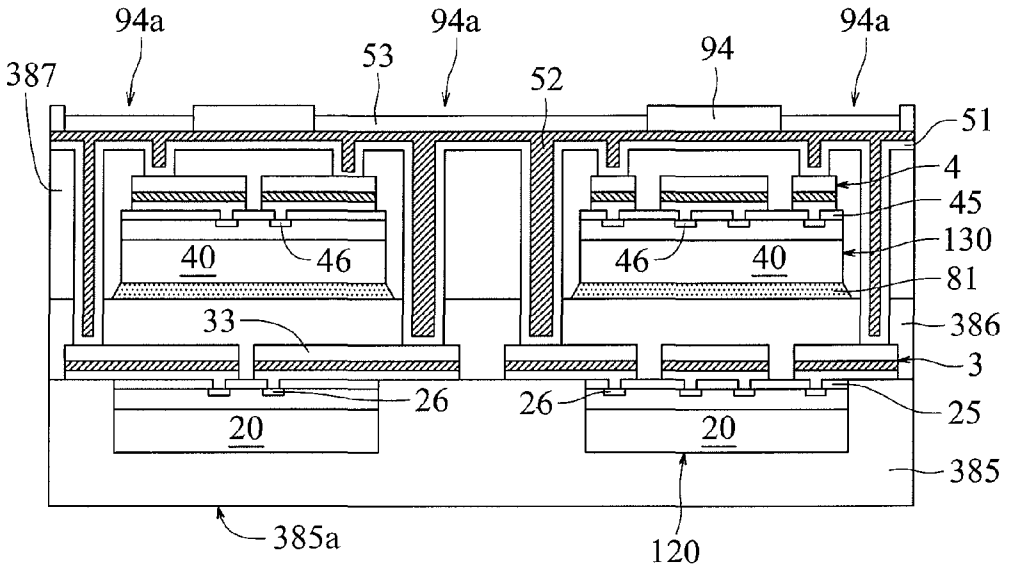

Fig. 109J

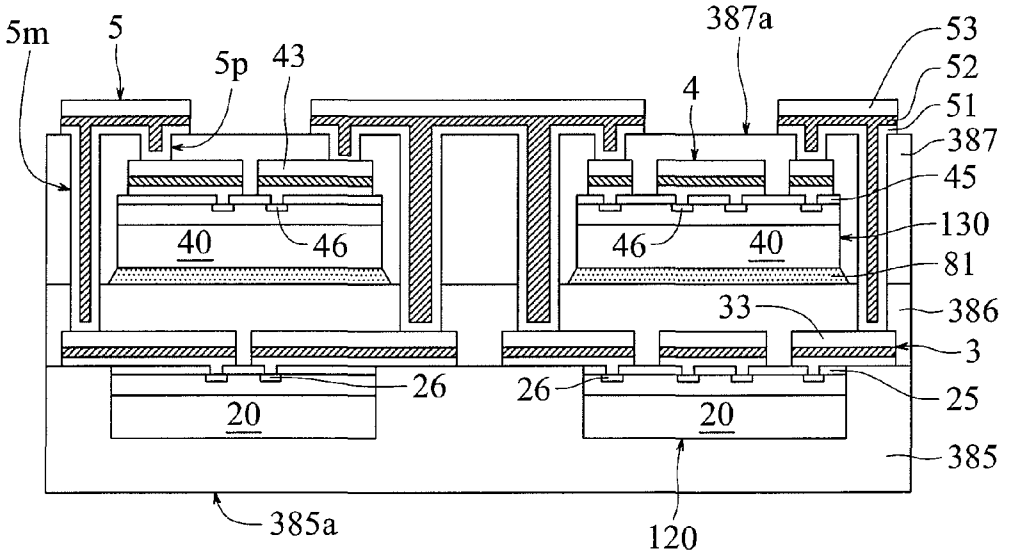

Fig. 109K

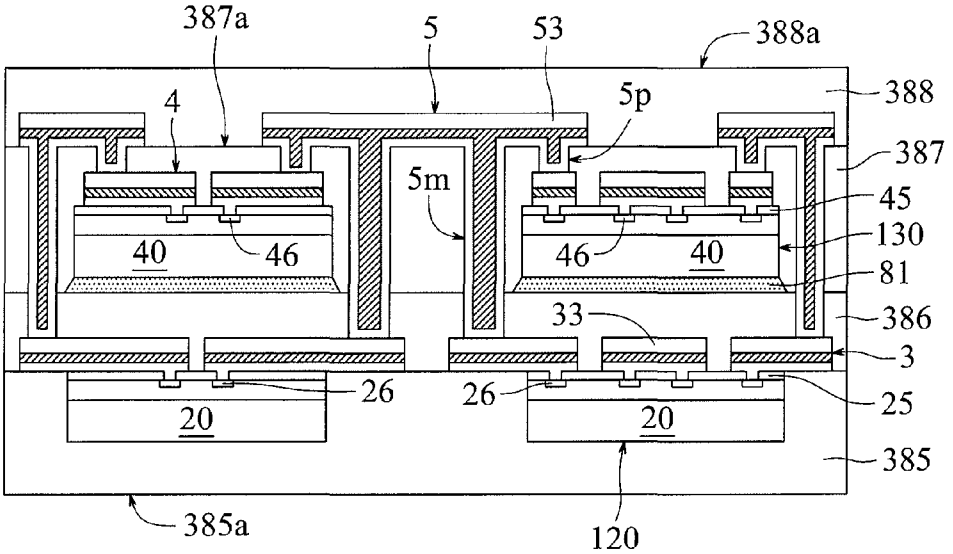

Fig. 109L

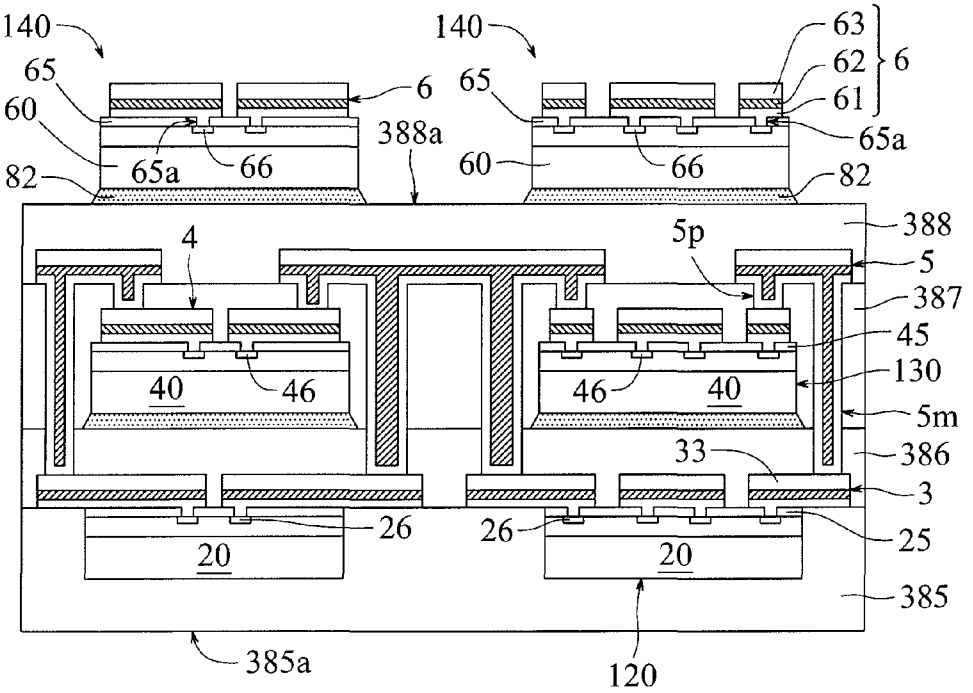

Fig. 109M

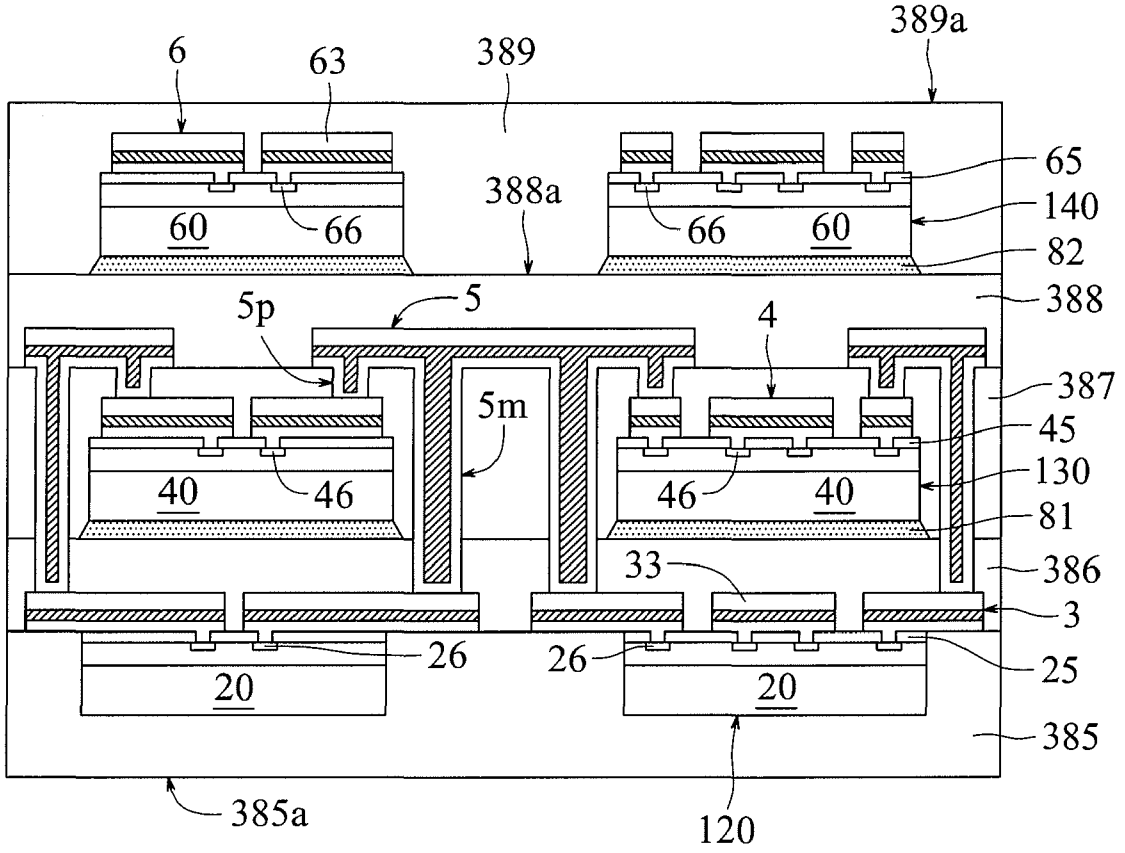
389a
6
63
389
65
388a
140
60
66
66
60
82
388
5p
5
4
387
5m
45
40
46
46
40
130
81
33
386
3
26
26
25
20
20
385
385a
120

Fig. 109N

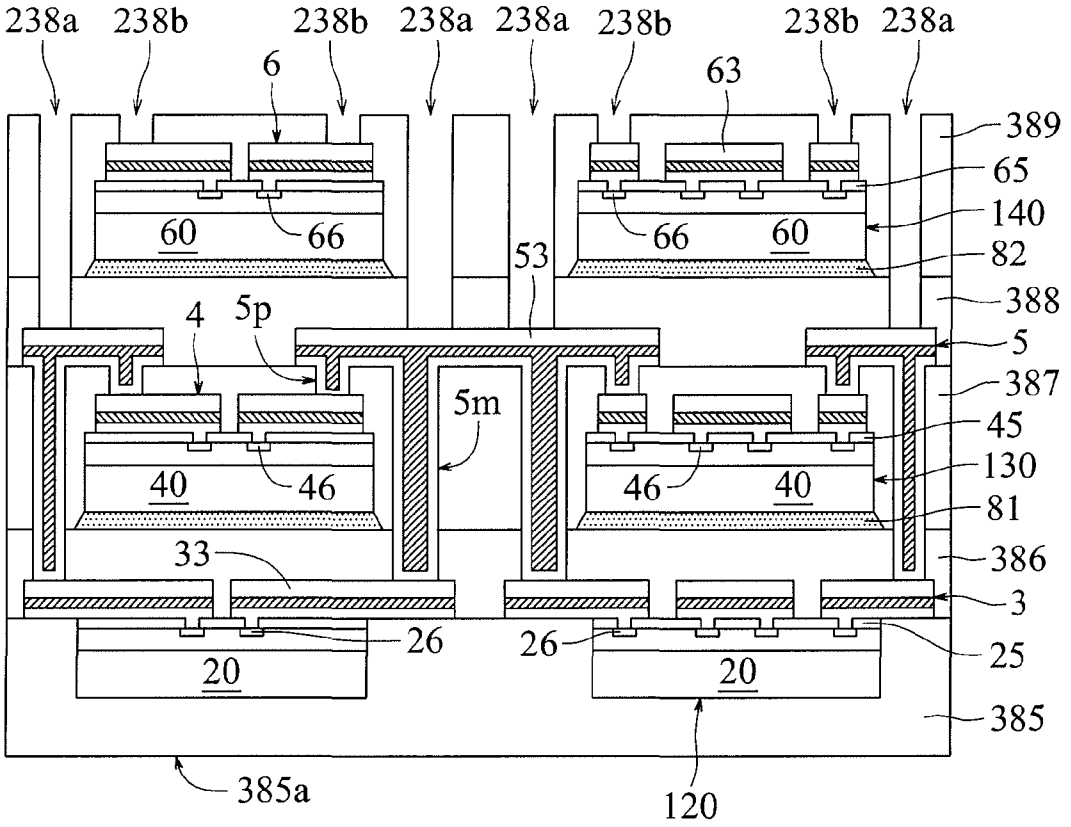
238a
238b
238b
238a
238a
238b
238b
238a
6
63
389
65
140
60
66
66
60
82
53
388
4
5p
5
387
5m
45
130
40
46
46
40
81
33
386
3
26
26
25
20
20
385
385a
120

Fig. 109O

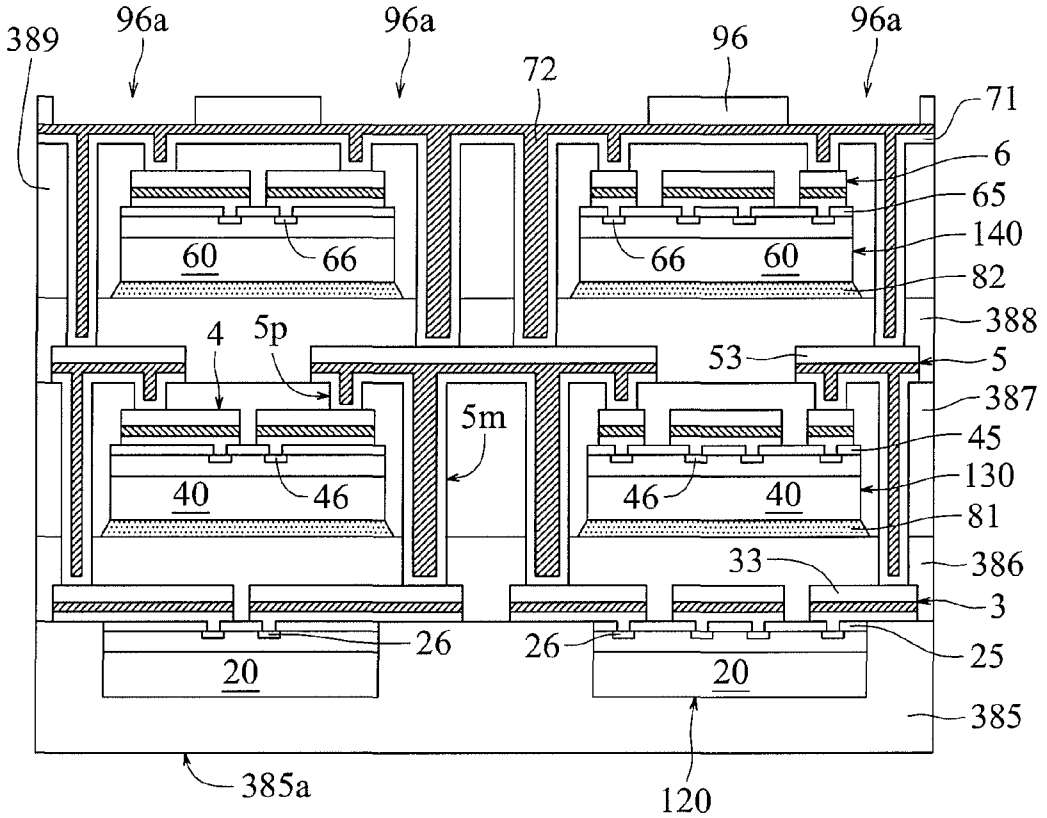
389
96a
96a
72
96
96a
71
6
65
140
82
388
60
66
66
60
4
5p
53
5
387
5m
45
130
81
40
46
46
40
33
386
3
26
26
25
20
20
385
385a
120

Fig. 109P

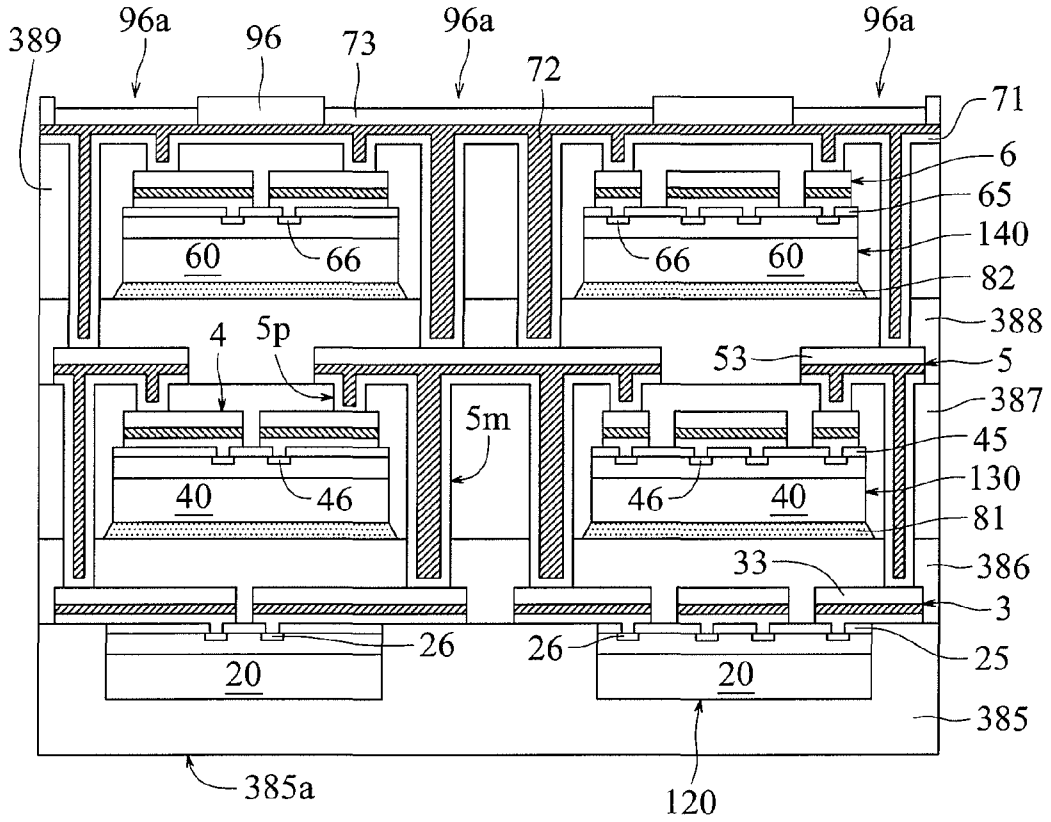
389
96a
96
73
96a
72
96a
71
6
65
140
82
388
5
387
45
130
81
386
3
25
385
385a
120
60
66
66
60
4
5p
53
5m
40
46
46
40
33
26
26
20
20

Fig. 109Q

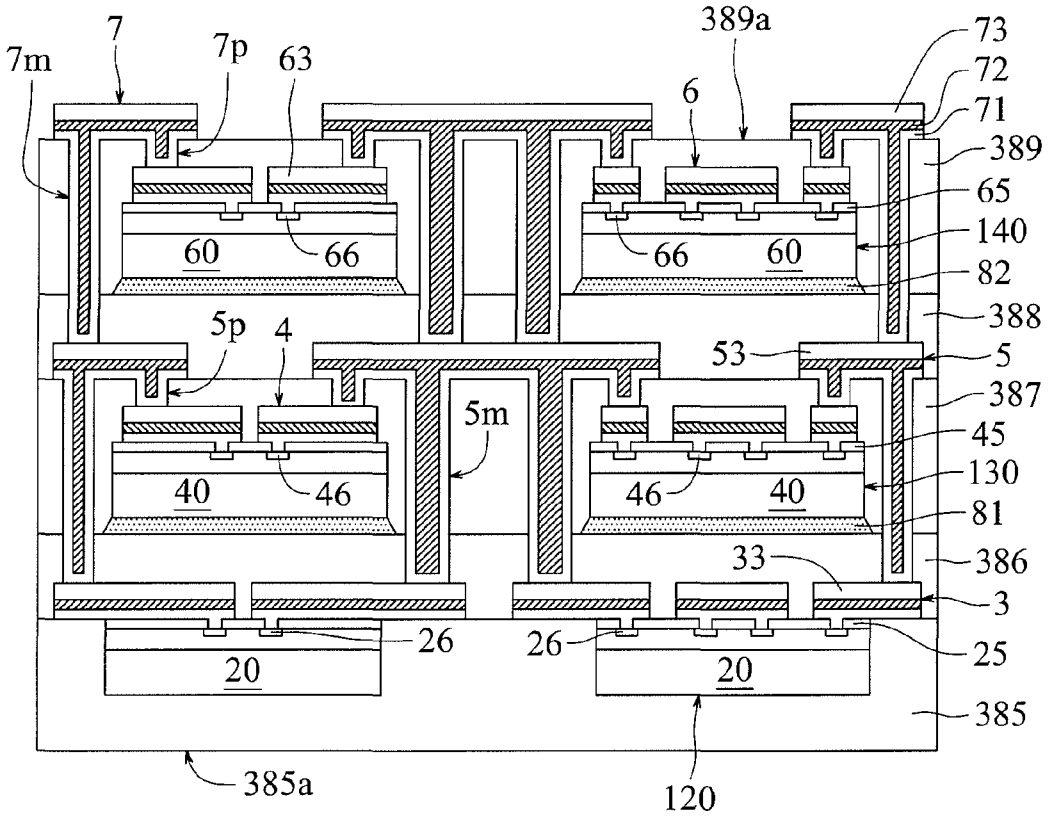
7m
7
7p
63
389a
6
73
72
71
389
65
140
82
388
60
66
66
60
5p
4
53
5
387
5m
45
130
81
40
46
46
40
33
386
3
26
26
25
20
20
385
385a
120

Fig. 109R

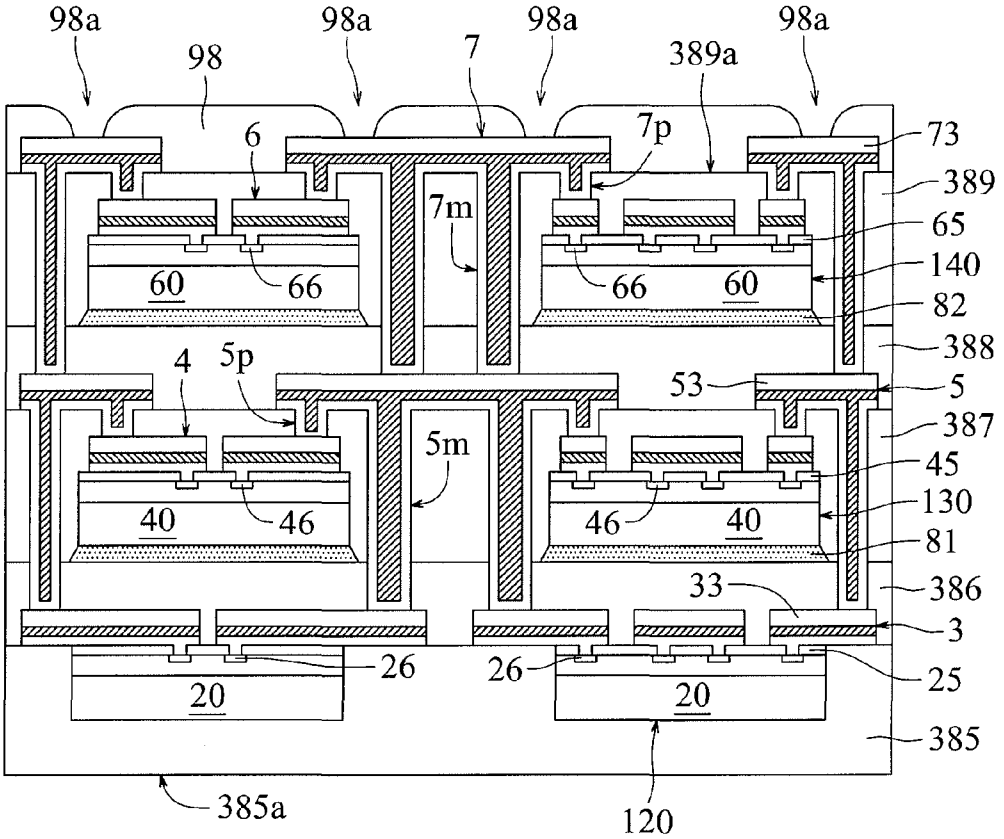
98a
98a
98a
98a
98
7
389a
6
7p
73
389
7m
65
60
66
66
60
140
82
388
4
5p
53
5
387
5m
45
40
46
46
40
130
81
33
386
3
26
26
25
20
20
385
385a
120

Fig. 109S

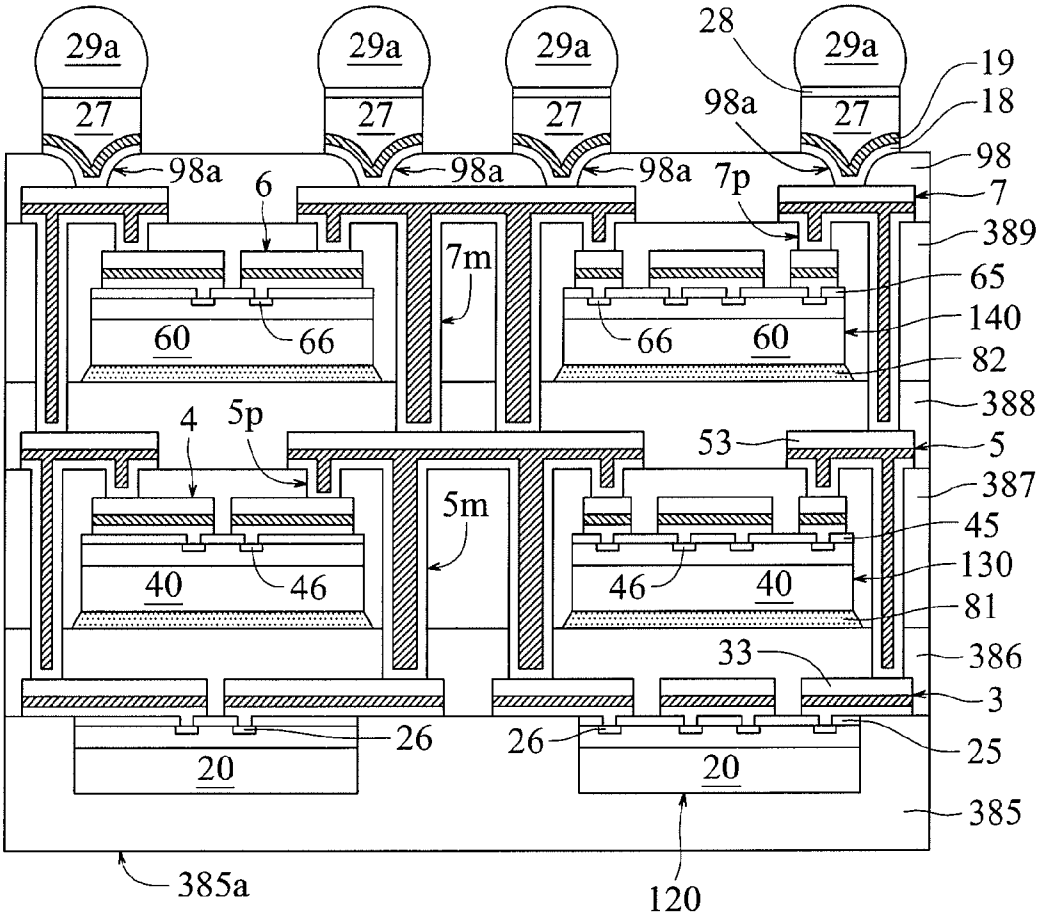
29a
29a
29a
29a
28
19
18
27
27
27
27
98a
98a
98a
98a
98
6
7p
7
389
7m
65
60
66
66
60
140
82
388
4
5p
53
5
387
5m
45
40
46
46
40
130
81
33
386
3
26
26
25
20
20
385
385a
120

Fig. 109T

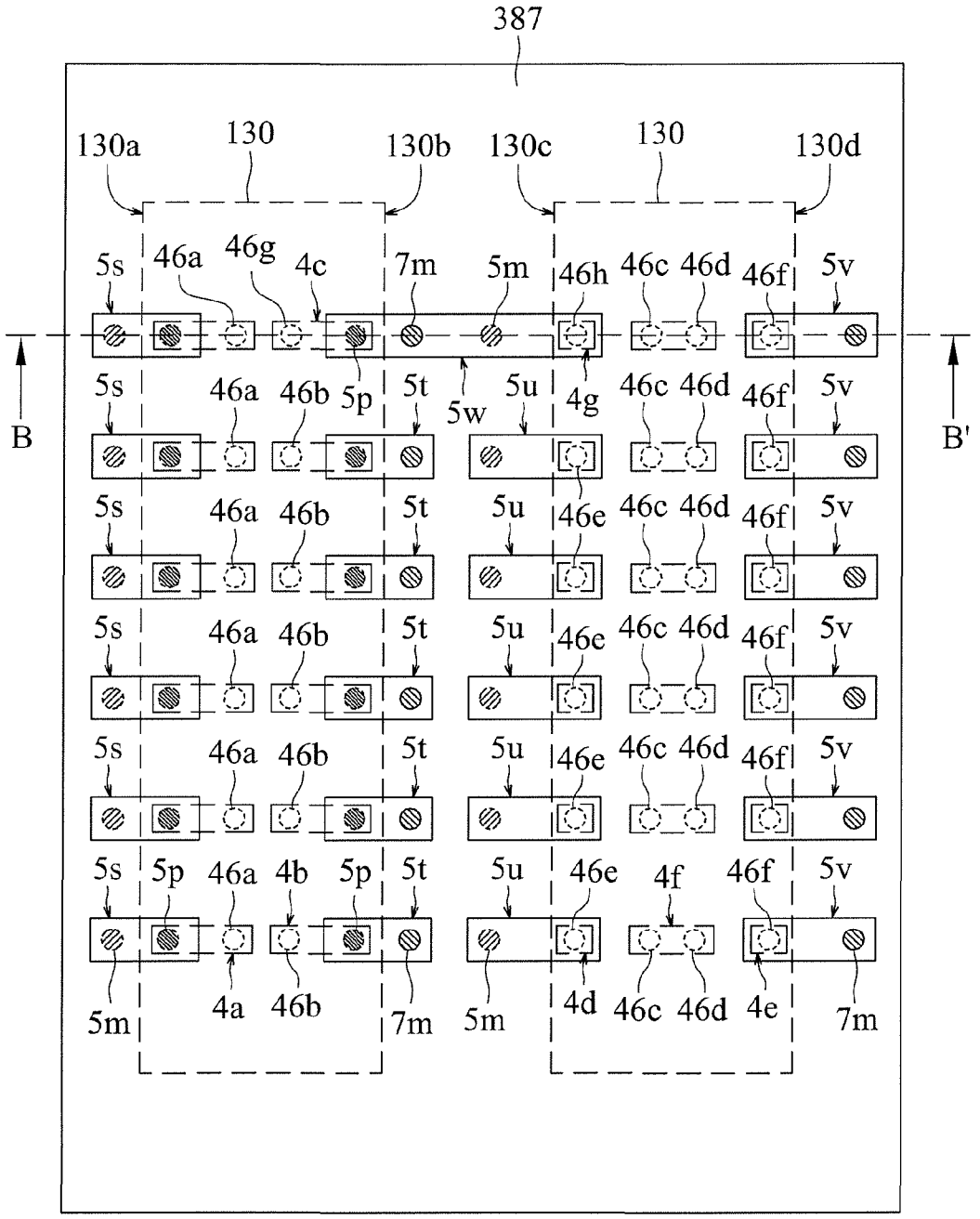
387
130a
130
130b
130c
130
130d
5s
46a
46g
4c
7m
5m
46h
46c
46d
46f
5v
B
B'
5p
5t
5w
5u
4g
46b
46e
4a
4b
4f
4d
4e

Fig. 109U

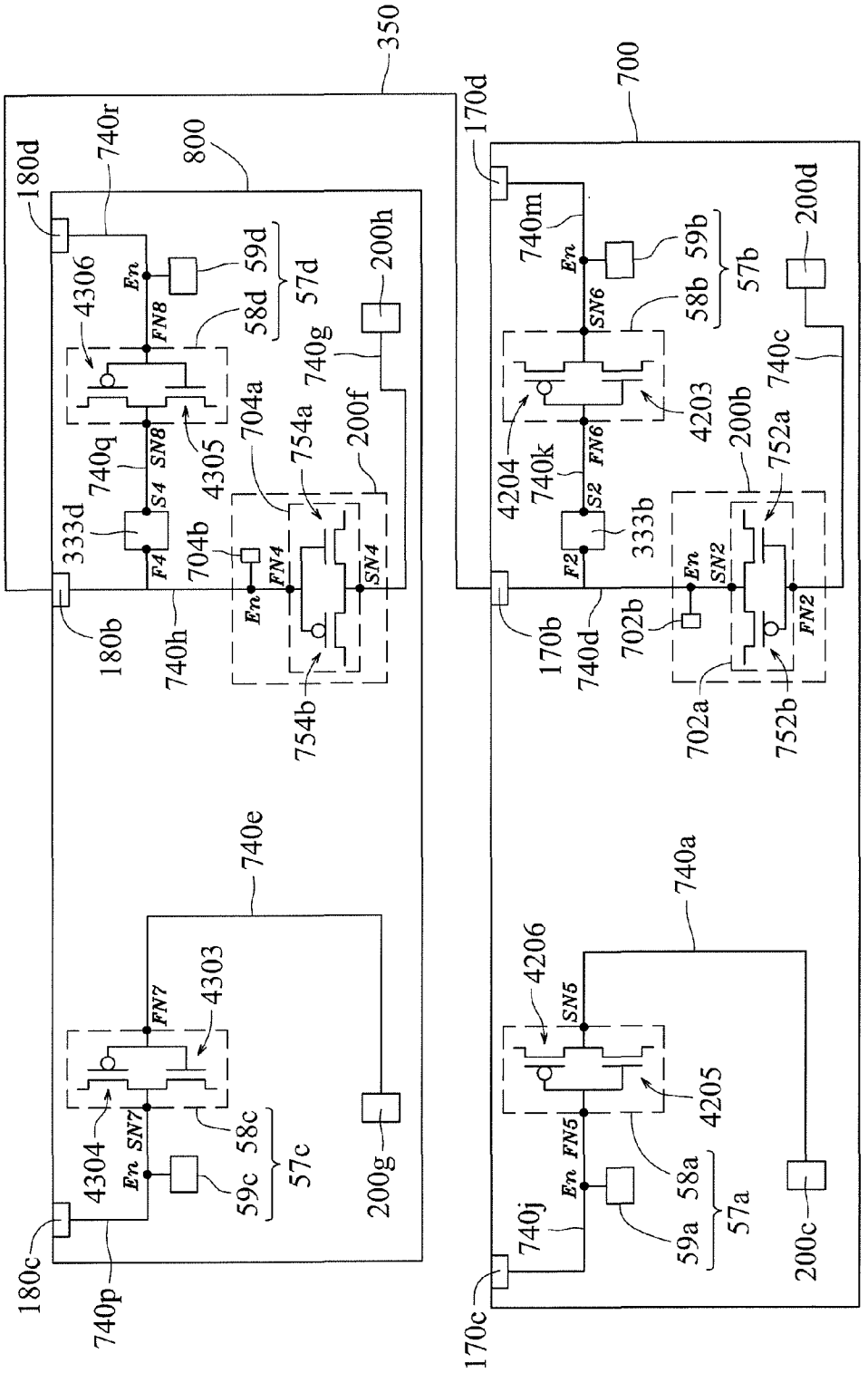
350
800
180d
740r
4306
En
FN8
59d
58d
57d
200h
740g
740q
SN8
4305
704a
754a
200f
333d
S4
F4
704b
FN4
SN4
180b
740h
754b
740e
4303
FN7
4304
SN7
58c
59c
57c
200g
180c
740p
700
170d
740m
59b
58b
57b
200d
SN6
4203
740c
4204
740k
FN6
200b
752a
S2
333b
F2
SN2
170b
740d
702b
FN2
702a
752b
740a
4206
SN5
4205
FN5
58a
59a
57a
740j
200c
170c

Fig. 110A

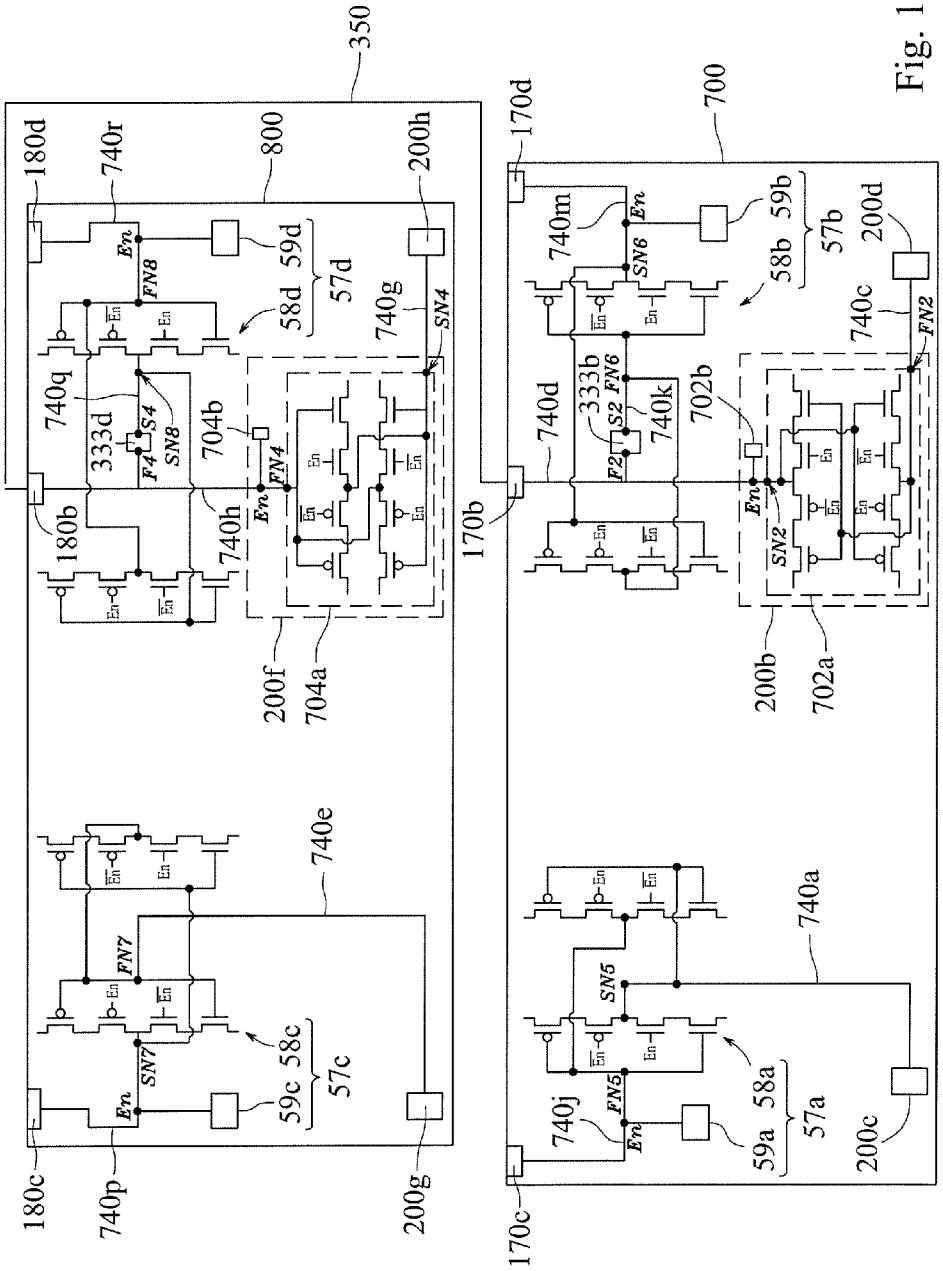
350
800
180d
740r
200h
59d
57d
58d
740g
SN4
740q
333d
S4
SN8
F4
704b
FN4
En
180b
740h
200f
704a
740e
FN7
SN7
58c
57c
59c
180c
740p
200g
700
170d
740m
59b
57b
58b
SN6
200d
740c
FN2
740d
333b
S2
FN6
740k
702b
F2
170b
SN2
200b
702a
740a
SN5
FN5
58a
57a
59a
740j
200c
170c

Fig. 110B

SYSTEM-IN PACKAGES

RELATED APPLICATION

[0001] This application claims priority to U.S. provisional application No. 61/178,493, filed on May 14, 2009, which is herein incorporated by reference in its entirety.

BACKGROUND OF THE DISCLOSURE

[0002] 1. Field of the Disclosure

[0003] The disclosure relates to system-in packages, and more particularly, to system-in packages that utilize on-chip metal bumps and intra-chip metal bumps for electrical interconnection between stacked chips.

[0004] 2. Brief Description of the Related Art

[0005] Semiconductor wafers are processed to produce IC (integrated circuit) chips having ever-increasing device density and shrinking feature geometries. Multiple conductive and insulating layers are required to enable the interconnection and isolation of the large number of semiconductor devices in different layers (e.g., active and passive devices, such as TFT, CMOS, capacitors, inductors, resistors, etc). Such large scale integration results in an increasing number of electrical connections between various layers and semiconductor devices. It also leads to an increasing number of leads to the resultant IC chip. These leads are exposed through a passivation layer of the IC chip, terminating in I/O pads that allow connections to external contact structures in a chip package.

[0006] Wafer-Level Packaging (WLP) commonly refers to the technology of packaging an IC chip at wafer level, instead of the traditional process of assembling the package of each individual unit after wafer dicing. WLP allows for the integration of wafer fabrication, packaging, test, and burn-in at the wafer level, before being singulated by dicing for final assembly into a chip carrier package, e.g., a ball grid array (BGA) package. The advantages offered by WLP include less size (reduced footprint and thickness), lesser weight, relatively easier assembly process, lower overall production costs, and improvement in electrical performance. WLP therefore streamlines the manufacturing process undergone by a device from silicon start to customer shipment. While WLP is a high throughput and low cost approach to IC chip packaging, it however invites significant challenges in manufacturability and structural reliability.

SUMMARY OF THE DISCLOSURE

[0007] The present disclosure is directed to system-in packages or multichip modules (MCMs) that include multi-layer chips in a multi-layer polymer structure, on-chip metal bumps on the multi-layer chips, intra-chip metal bumps in the multi-layer polymer structure, and patterned metal layers in the multi-layer polymer structure. The multi-layer chips in the multi-layer polymer structure can be connected to each other or to an external circuit or structure, such as mother board, ball-grid-array (BGA) substrate, printed circuit board, metal substrate, glass substrate or ceramic substrate, through the on-chip metal bumps, the intra-chip metal bumps and the patterned metal layers. The system-in packages or multichip modules can be connected to the external circuit or structure through solder bumps, meal bumps or wirebonded wires.

[0008] Exemplary embodiments of the present disclosure provide system-in packages or multichip module having multi-layer chips in a multi-layer polymer structure and using metal bumps on the multi-layer chips and in the multi-layer polymer structure for electrical interconnection between the chips.

[0009] Exemplary embodiments of the present disclosure provide a method which includes adhering chips with on-chip metal bumps to a substrate with intra-chip metal bumps, then encapsulating the chips and the substrate, then polishing or grinding to expose both the on-chip and the intra-chip metal bumps, then forming metal interconnections on the polished or ground surface, and then repeating the above processes for integrating the second, third, forth, and etc. tier chips.

[0010] Furthermore, exemplary embodiments can provide for ease for manufacturing multi-layer chip integration with good electromagnetic field shield and high routing density between chips due to fine-pitched intra-chip metal bumps and on-chip metal bumps.

[0011] Furthermore, exemplary embodiments can provide manufacturing multi-layer chip integration with high silicon utilization.

[0012] These, as well as other components, steps, features, benefits, and advantages of the present disclosure, will now become clear from a review of the following detailed description of illustrative embodiments, the accompanying drawings, and the claims.

BRIEF DESCRIPTION OF THE DRAWINGS

[0013] The drawings disclose illustrative embodiments of the present disclosure. They do not set forth all embodiments. Other embodiments may be used in addition or instead. Details that may be apparent or unnecessary may be omitted to save space or for more effective illustration. Conversely, some embodiments may be practiced without all of the details that are disclosed. When the same numeral appears in different drawings, it refers to the same or like components or steps.

[0014] Aspects of the disclosure may be more fully understood from the following description when read together with the accompanying drawings, which are to be regarded as illustrative in nature, and not as limiting. The drawings are not necessarily to scale, emphasis instead being placed on the principles of the disclosure. In the drawings:

[0015] FIGS. **1-9**, **11-36** and **38-52** are cross-sectional views showing a process of forming a system-in package or multichip module, according to an embodiment of the present disclosure;

[0016] FIG. **10** is a schematic top perspective view of the semi finished device shown in FIG. **9**;

[0017] FIG. **37** is a schematic top perspective view of the patterned metal layer **7** of FIG. **36**;

[0018] FIGS. **53** and **54** are cross-sectional views showing a process for forming a system-in package or multichip module, according to an embodiment of the present disclosure;

[0019] FIG. **55** shows a cross-sectional view of a system-in package or multichip module, according to an embodiment of the present disclosure;

[0020] FIG. **56** is a schematic top perspective view of the patterned metal layer **7** shown in FIG. **55**;

[0021] FIGS. **57-67** are cross-sectional views showing a process for forming a system-in package or multichip module, according to an embodiment of the present disclosure;

[0022] FIGS. **68-73** are cross-sectional views showing a process for forming a system-in package or multichip module, according to an embodiment of the present disclosure;

[0023] FIG. **74** shows a cross-sectional view of a module, according to an embodiment of the present disclosure;

[0024] FIG. **75** is a schematic top perspective view of the patterned metal layer **7** of the module shown in FIG. **74**;

[0025] FIGS. **76-84** are cross-sectional views showing a process for forming a system-in package or multichip module, according to an embodiment of the present disclosure;

[0026] FIG. **85** shows a cross-sectional view of an electronic device, according to an embodiment of the present disclosure;

[0027] FIGS. **86** and **95** are circuit diagrams each showing interface circuits between two chips, according to an embodiment of the present disclosure;

[0028] FIGS. **87** and **90** show inter-chip circuits each including a two-stage cascade inter-chip receiver and an inter-chip ESD (electro static discharge) circuit, according to an embodiment of the present disclosure;

[0029] FIGS. **88** and **89** show inter-chip circuits each including a two-stage cascade inter-chip driver and an inter-chip ESD (electro static discharge) circuit, according to an embodiment of the present disclosure;

[0030] FIGS. **91** and **94** show two-stage cascade off-chip receivers, according to an embodiment of the present disclosure;

[0031] FIGS. **92** and **93** show two-stage cascade off-chip drivers, according to an embodiment of the present disclosure;

[0032] FIGS. **96-101** show how to calculate an active area of an ESD unit of a chip and define a size of an ESD circuit composed of one or more of the ESD units, according to an embodiment of the present disclosure;

[0033] FIGS. **102** and **103** show how to define or calculate a physical channel width and a physical channel length of a MOS transistor, according to an embodiment of the present disclosure;

[0034] FIG. **104** shows a cross-sectional view of a system-in package or multichip module, according to an embodiment of the present disclosure;

[0035] FIG. **105** shows a schematic top perspective view of a chip, according to an embodiment of the present disclosure;

[0036] FIGS. **106**A-**106**H show schematic cross-sectional views of eight alternates with regards to the chip **900** illustrated in FIG. **105**;

[0037] FIGS. **107**A-**107**D show a process for forming a chip, according to an embodiment of the present disclosure;

[0038] FIG. **107**E shows a cross-sectional view of a chip, according to an embodiment of the present disclosure;

[0039] FIG. **107**F shows a cross-sectional view of a chip, according to an embodiment of the present disclosure;

[0040] FIGS. **107**G-**107**K are cross-sectional views showing a process of forming a system-in package or multichip module, according to an embodiment of the present disclosure;

[0041] FIG. **107**L shows a cross-sectional view of a system-in package or multichip module, according to an embodiment of the present disclosure;

[0042] FIGS. **108**A-**108**F are cross-sectional views showing a process for forming a system-in package or multichip module, according to an embodiment of the present disclosure;

[0043] FIGS. **109**A-**109**T are cross-sectional views showing a process for forming a system-in package or multichip module, according to an embodiment of the present disclosure;

[0044] FIG. **109**U shows a schematic top perspective view of the patterned metal layer **5** of the system-in package or multichip module shown in FIG. **109**T; and

[0045] FIGS. **110**A and **110**B are circuit diagrams each showing interface circuits between two chips, according to an embodiment of the present disclosure.

[0046] While certain embodiments are depicted in the drawings, one skilled in the art will appreciate that the embodiments depicted are illustrative and that variations of those shown, as well as other embodiments described herein, may be envisioned and practiced within the scope of the present disclosure.

DETAILED DESCRIPTION OF THE INVENTION

[0047] Illustrative embodiments are now described. Other embodiments may be used in addition or instead. Details that may be apparent or unnecessary may be omitted to save space or for a more effective presentation. Conversely, some embodiments may be practiced without all of the details that are disclosed.

[0048] Aspects of the present disclosure are directed to system-in packages or multichip modules (MCMs) that include multi-layer chips in a multi-layer polymer structure, on-chip metal bumps on the multi-layer chips, intra-chip metal bumps in the multi-layer polymer structure, and patterned metal layers in the multi-layer polymer structure. The multi-layer chips in the multi-layer polymer structure can be connected to each other or to an external circuit or structure, such as mother board, ball-grid-array (BGA) substrate, printed circuit board, metal substrate, glass substrate and/or ceramic substrate, through the on-chip metal bumps, the intra-chip metal bumps, and/or the patterned metal layers. The system-in packages or multichip modules can be connected to the external circuit or structure through solder bumps, meal bumps, and/or wirebonded wires.

[0049] FIGS. **1-52** show a process for forming a system-in package or multichip module according to an exemplary embodiment of the present disclosure.

[0050] Referring to FIG. **1**, a dielectric or insulating layer **10** having a suitable thickness, e.g., between 0.3 and 30 micrometers, and preferably between 1 and 10 micrometers, can be formed on a top surface of a substrate **110** by using a chemical-vapor deposition (CVD) process, a spin-coating process or a lamination process. Next, an adhesion layer **11** having a thickness, e.g., less than 1 micrometer, such as between 1 nanometer and 0.5 micrometers, can be formed on the dielectric or insulating layer **10** by using a physical-vapor deposition (PVD) process, such as sputtering process or evaporation process, or a chemical-vapor deposition (CVD) process. Next, a seed layer **12** having a thickness, e.g., less than 1 micrometer, such as between 10 nanometers and 0.8 micrometers, can be formed on the adhesion layer **11** by using a physical-vapor deposition (PVD) process, such as sputtering process or evaporation process, a chemical-vapor deposition (CVD) process, or an electroless plating process.

[0051] The substrate **110** can have a suitable thickness, T**1**, for example, between about 10 and about 1,000 micrometers, between 10 and 100 micrometers or between 100 and 500 micrometers. The substrate **110** can be made of a suitable material, examples of which include, but are not limited to, silicon, glass, ceramic, aluminum, copper or organic polymer. For example, the substrate **110** can be a silicon substrate, a glass substrate, a ceramic substrate, a metal substrate, an organic substrate or a polymer substrate having thickness,

e.g., T**1** between 10 and 1,000 micrometers, between 10 and 100 micrometers, or between 100 and 500 micrometers. Alternatively, the substrate **110** can be a wafer, such as silicon wafer, including lower-tier chips.

[0052] The dielectric or insulating layer **10** can be made of a suitable material. For example, the dielectric or insulating layer **10** can be made of silicon dioxide (SiO_2), silicon nitride, silicon oxynitride, silicon carbon nitride, polyimide, epoxy, benzocyclobutane (BCB), polybenzoxazole (PBO), polyphenylene oxide (PPO), silosane or SU-8 having a suitable thickness, e.g., between 0.3 and 30 micrometers, and preferably between 1 and 10 micrometers.

[0053] The adhesion layer **11** can be made of suitable material. For example, the material of the adhesion layer **11** may include titanium, a titanium-tungsten alloy, titanium nitride, chromium, tantalum, tantalum nitride, nickel, or nickel vanadium. The seed layer may be made of suitable material. For example, the material of the seed layer **12** may include copper, titanium-copper alloy, silver, gold, nickel, aluminum, platinum, or palladium.

[0054] For example, when the adhesion layer **11** is formed by sputtering a titanium-containing layer, such as a single layer of titanium-tungsten alloy, titanium or titanium nitride, having a thickness, e.g., less than 1 micrometer, such as between 1 nanometer and 0.5 micrometers, on the dielectric or insulating layer **10**, the seed layer **12** can be formed by sputtering a copper layer, a silver layer, a titanium-copper-alloy layer, a gold layer, a nickel layer, an aluminum layer, a platinum layer or a palladium layer with a thickness, e.g., less than 1 micrometer, such as between 10 nanometers and 0.8 micrometers, on the titanium-containing layer.

[0055] Alternatively, when the adhesion layer **11** is formed by sputtering a tantalum-containing layer, such as a single layer of tantalum or tantalum nitride, having a thickness, e.g., less than 1 micrometer, such as between 1 nanometer and 0.5 micrometers, on the dielectric or insulating layer **10**, the seed layer **12** can be formed by sputtering a copper layer, a silver layer, a titanium-copper-alloy layer, a gold layer, a nickel layer, an aluminum layer, a platinum layer or a palladium layer with a thickness, e.g., less than 1 micrometer, such as between 10 nanometers and 0.8 micrometers, on the tantalum-containing layer.

[0056] Alternatively, when the adhesion layer **11** is formed by sputtering a chromium-containing layer, such as a single layer of chromium, having a thickness, e.g., less than 1 micrometer, such as between 1 nanometer and 0.5 micrometers, on the dielectric or insulating layer **10**, the seed layer **12** can be formed by sputtering a copper layer, a silver layer, a titanium-copper-alloy layer, a gold layer, a nickel layer, an aluminum layer, a platinum layer or a palladium layer with a thickness, e.g., less than 1 micrometer, such as between 10 nanometers and 0.8 micrometers, on the chromium-containing layer.

[0057] Alternatively, when the adhesion layer **11** is formed by sputtering a nickel-containing layer, such as a single layer of nickel or nickel vanadium, having a thickness, e.g., less than 1 micrometer, such as between 1 nanometer and 0.5 micrometers, on the dielectric or insulating layer **10**, the seed layer **12** can be formed by sputtering a copper layer, a silver layer, a titanium-copper-alloy layer, a gold layer, a nickel layer, an aluminum layer, a platinum layer or a palladium layer with a thickness, e.g., less than 1 micrometer, such as between 10 nanometers and 0.8 micrometers, on the nickel-containing layer.

[0058] Referring to FIG. **2**, after forming the seed layer **12**, a photoresist layer **90**, such as positive-type photoresist layer or negative-type photoresist layer (preferred), can be formed on the seed layer **12** of any previously described material by using a spin-on coating process or a lamination process. Next, the photoresist layer **90** is patterned with processes of lithographic, light exposure and development to form multiple openings **90***a* in the photoresist layer **90** exposing the seed layer **12** of any previously described material.

[0059] Next, referring to FIG. **3**, a metal layer **13**, a conductive layer, having a suitable thickness, e.g., greater than 1 micrometer, such as between 2 and 30 micrometers, and preferably between 3 and 10 micrometers, can be formed on the seed layer **12** exposed by the openings **90***a* and in the openings **90***a* by using an electroplating or electroless plating process. The metal layer **13** can be a single layer of copper, silver, gold, palladium, platinum, rhodium, ruthenium, rhenium or nickel, or a composite layer made of the previously described metals.

[0060] For example, the metal layer **13** can be a single metal layer formed by electroplating a copper layer, to a desired thickness, e.g., greater than 1 micrometer, such as between 2 and 30 micrometers, and preferably between 3 and 10 micrometers, in the openings **90***a* and on the seed layer **12**, preferably the previously described copper or titanium-copper-alloy seed layer **12**, exposed by the openings **90***a*.

[0061] Alternatively, the metal layer **13** can be a single metal layer formed by electroplating a gold layer, to a desired thickness, e.g., greater than 1 micrometer, such as between 2 and 30 micrometers, and preferably between 3 and 10 micrometers, in the openings **90***a* and on the seed layer **12**, preferably the previously described gold seed layer **12**, exposed by the openings **90***a*.

[0062] Alternatively, the metal layer **13** can be a single metal layer formed by electroplating a nickel layer, to a suitable thickness, e.g., greater than 1 micrometer, such as between 2 and 30 micrometers, and preferably between 3 and 10 micrometers, in the openings **90***a* and on the seed layer **12**, preferably the previously described copper, nickel or titanium-copper-alloy seed layer **12**, exposed by the openings **90***a*.

[0063] Alternatively, the metal layer **13** can be composed of two (or, double) metal layers formed by electroplating a nickel layer, to a suitable thickness, e.g., greater than 1 micrometer, such as between 2 and 30 micrometers, and preferably between 3 and 10 micrometers, in the openings **90***a* and on the seed layer **12**, preferably the previously described copper, nickel or titanium-copper-alloy seed layer **12**, exposed by the openings **90***a*, and then electroplating or electroless plating a gold layer or a palladium layer, to a suitable thickness, e.g., between 0.005 and 10 micrometers, and preferably between 0.05 and 1 micrometers, in the openings **90***a* and on the electroplated nickel layer in the openings **90***a*.

[0064] Alternatively, the metal layer **13** can be composed of three (or, triple) metal layers formed by electroplating a copper layer, to a thickness, e.g., greater than 1 micrometer, such as between 2 and 30 micrometers, and preferably between 3 and 10 micrometers, in the openings **90***a* and on the seed layer **12**, preferably the previously described copper or titanium-copper-alloy seed layer **12**, exposed by the openings **90***a*, next electroplating or electroless plating a nickel layer, to a thickness, e.g., between 1 and 15 micrometers or between 0.3 and 1 micrometers, in the openings **90***a* and on the electroplated

copper layer in the openings **90***a*, and then electroplating or electroless plating a gold layer or a palladium layer, to a thickness, e.g., between 0.005 and 1 micrometers, and preferably between 0.05 and 0.1 micrometers, in the openings **90***a* and on the electroplated or electroless plated nickel layer in the openings **90***a*.

[0065] Referring to FIG. **4**, after forming the metal layer **13**, a photoresist layer **91**, such as positive-type photoresist layer or negative-type photoresist layer (which is preferred), having a thickness, e.g., greater than 1 micrometer can be formed on the photoresist layer **90** and on the metal layer **13** by a spin-on coating process or a lamination process. Next, the photoresist layer **91** is patterned with processes of lithographic, light exposure and development to form multiple cylindrical openings **91***a* in the photoresist layer **91** exposing multiple contact points of the metal layer **13**.

[0066] Next, referring to FIG. **5**, multiple metal pillars or bumps **14** (intra-chip metal pillars or bumps) having a thickness, e.g., or height greater than 15 micrometers, such as between 15 and 520 micrometers, and preferably between 20 and 110 micrometers, are formed in the cylindrical openings **91***a* and on the contact points of the metal layer **13** exposed by the cylindrical openings **91***a* using an electroplating or electroless plating process. The metal pillars or bumps **14** can be composed of a single layer, e.g., of copper, silver, gold, palladium, platinum, rhodium, ruthenium, rhenium or nickel, or a composite layer made of the previously described metals.

[0067] For example, the metal pillars or bumps **14** can be composed of a single metal layer formed by electroplating a copper layer, to a thickness, e.g., greater than 15 micrometers, such as between 15 and 520 micrometers, and preferably between 20 and 110 micrometers, in the cylindrical openings **91***a* and on the contact points of the metal layer **13**, preferably the previously described copper layer **13**, exposed by the cylindrical openings **91***a*.

[0068] Alternatively, the metal pillars or bumps **14** can be composed of a single metal layer formed by electroplating a gold layer, to a thickness, e.g., greater than 15 micrometers, such as between 15 and 520 micrometers, and preferably between 20 and 110 micrometers, in the cylindrical openings **91***a* and on the contact points of the metal layer **13**, preferably the previously described gold layer **13**, exposed by the cylindrical openings **91***a*.

[0069] Alternatively, the metal pillars or bumps **14** can be composed of a single metal layer formed by electroplating a nickel layer, to a thickness, e.g., greater than 15 micrometers, such as between 15 and 520 micrometers, and preferably between 20 and 110 micrometers, in the cylindrical openings **91***a* and on the contact points of the metal layer **13**, preferably the previously described nickel or copper layer **13**, exposed by the cylindrical openings **91***a*.

[0070] Alternatively, the metal pillars or bumps **14** can be composed of three (or, triple) metal layers formed by electroplating a copper layer, to a thickness, e.g., greater than 10 micrometers, such as between 15 and 500 micrometers, and preferably between 20 and 100 micrometers, in the cylindrical openings **91***a* and on the contact points of the metal layer **13**, preferably the previously described copper layer **13**, exposed by the cylindrical openings **91***a*, next electroplating or electroless plating a nickel layer, to a thickness, e.g., between 1 and 15 micrometers or between 0.3 and 1 micrometers, in the cylindrical openings **91***a* and on the electroplated copper layer in the cylindrical openings **91***a*, and then electroplating or electroless plating a gold layer or a palladium layer, to a thickness, e.g., between 0.005 and 1 micrometers, and preferably between 0.05 and 0.1 micrometers, in the cylindrical openings **91***a* and on the electroplated or electroless plated nickel layer in the cylindrical openings **91***a*.

[0071] Referring to FIG. **6**, after forming the metal pillars or bumps **14**, the photoresist layers **90** and **91** are removed using a chemical solution containing amine or $NaCO_3$. Accordingly, the metal pillars or bumps **14** can be formed on the metal layer **13** after the photoresist layers **90** and **91** are removed.

[0072] Alternatively, another process for forming the metal pillars or bumps **14** on the metal layer **13** can be performed by the following steps. First, the photoresist layer **90** is removed using a chemical solution containing amine or $NaCO_3$ after forming the metal layer **13** illustrated in FIG. **3**. Next, the photoresist layer **91** illustrated in FIG. **4** can be formed on the metal layer **13** and on the seed layer **12** by a spin-on coating process or a lamination process. Next, the photoresist layer **91** is patterned with the processes of lithographic, light exposure and development to form the cylindrical openings **91***a* in the photoresist layer **91** exposing the contact points of the metal layer **13**. Next, the metal pillars or bumps **14** can be formed in the cylindrical openings **91***a* and on the contact points of the metal layer **13** exposed by the cylindrical openings **91***a* using an electroplating or electroless plating process, which can be referred to as the step illustrated in FIG. **5**. Next, the photoresist layer **91** can be removed using a chemical solution containing amine or $NaCO_3$. Accordingly, the metal pillars or bumps **14** can be formed on the metal layer **13** after the photoresist layer **91** is removed.

[0073] Alternatively, the process steps illustrated in FIGS. **4** and **5** can be repeated (e.g., once more) for making higher metal bumps, if necessary. That is, another photoresist layer can be formed on the photoresist layer **91** using a spin-on coating process or a lamination process, next multiple cylindrical openings are formed in the another photoresist layer and expose the metal pillars or bumps **14**, next additional metal bumps are formed on the metal pillars or bumps **14** exposed by the cylindrical openings in the another photoresist layer and in the cylindrical openings in the another photoresist layer using an electroplating or electroless plating process, and then the another photoresist layer and the photoresist layers **90** and **91** are removed using a chemical solution containing amine or $NaCO_3$. The additional metal bumps can be composed of a single layer of copper, silver, gold, palladium, platinum, rhodium, ruthenium, rhenium or nickel, or a composite layer made of the previously described metals.

[0074] Referring to FIG. **7**, after removing the photoresist layers **90** and **91**, the seed layer **12** not under the metal layer **13** can be removed by using a wet chemical etching process or a reactive ion etching (RIE) process, and then the adhesion layer **11** not under the metal layer **13** can be removed by a suitable process such as by using a wet chemical etching process or a reactive ion etching (RIE) process.

[0075] Accordingly, the adhesion layer **11**, the seed layer **12** and the metal layer **13** can form a patterned metal layer **1** on the dielectric or insulating layer **10**. The metal pillars or bumps **14** are formed on the metal layer **13** of the patterned metal layer **1**. The pitch between neighboring or adjacent pairs of metal pillars or bumps **14** can be designed as desired, e.g., greater than 100 micrometers, such as between 100 and 250 micrometers, or less than 100 micrometers, such as between 5 and 50 micrometers or between, 50 and 100

micrometers. Each of the metal pillars or bumps **14** may have a suitable width or diameter, e.g., greater than 5 micrometers, such as between 5 and 300 micrometers, and preferably between 5 and 50 micrometers. The patterned metal layer **1** may include a signal trace, a power interconnect, such as power plane, power bus or power trace, or a ground interconnect, such as ground plane, ground bus or ground trace, connecting multiple of the metal pillars or bumps **14**. A coverage ratio of an area of the patterned metal layer **1** covering a top surface of the dielectric or insulating layer **10** to an area of the top surface ranges from 50% to 95%, and preferably ranges from 60% to 90%.

[0076] Next, referring to FIGS. **8** and **9**, a glue (or, adhesive) material **80** can be formed on or applied to the metal layer **13** of the patterned metal layer **1** and on the dielectric or insulating layer **10** by using a dispensing process, a lamination process or a screen-printing process, and then one or more chips **120** (one of them is shown) can be attached to the metal layer **13** of the patterned metal layer **1** and to the dielectric or insulating layer **10** by the glue material **80**.

[0077] Alternatively, another technique to attach the chips **120** is by first forming or applying the glue material **80** onto bottom surfaces of the chips **120** and then attaching the chips **120** to the metal layer **13** of the patterned metal layer **1** and to the dielectric or insulating layer **10** through the glue material **80** using, e.g., a thermal compression process.

[0078] Alternatively, after the step illustrated in FIG. **7**, a polymer layer may be formed on the metal layer **13** of the patterned metal layer **1** and on the dielectric or insulating layer **10**, and then the chips **120** can be attached to the polymer layer by the glue material **80**. The polymer layer can be a polyimide layer or a benzocyclobutene layer having a suitable thickness, e.g., between 2 and 30 micrometers. The glue material **80** can be formed on the polymer layer, and the chips **120** can be formed on the glue material **80**.

[0079] Examples of suitable glue or adhesive material **80** include, but are not limited to, epoxy, polyimide, benzocyclobutane (BCB), polybenzoxazole (PBO), poly-phenylene oxide (PPO), silosane or SU-8, and may have a suitable thickness, e.g., greater than or equal to 3 micrometers, such as between 3 and 100 micrometers, and preferably between 5 and 50 micrometers or between 10 and 30 micrometers.

[0080] Each of the chips **120** can include a semiconductor substrate **20**, multiple transistors, such as NMOS transistors, PMOS transistors or bipolar transistors, in and/or over the semiconductor substrate **20**, multiple fine-line metal layers over the semiconductor substrate **20**, multiple dielectric layers over the semiconductor substrate **20** and between the fine-line metal layers, multiple via plugs of copper or tungsten in the dielectric layers, a passivation layer **25** over the semiconductor substrate **20**, over the transistors, over the dielectric layers and over the fine-line metal layers, a patterned metal layer **2** on the passivation layer **25**, and multiple metal pillars or bumps **24** (on-chip metal pillars or bumps) on the patterned metal layer **2**. In each of the chips **120**, a coverage ratio of an area of the patterned metal layer **2** covering a top surface of the passivation layer **25** to an area of the top surface can range from, for example, 50% to 95%, and preferably ranges from 60% to 90%. The transistors can be provided for NOR gates, NAND gates, AND gates, OR gates, flash memory cells, static random access memory (SRAM) cells, dynamic random access memory (DRAM) cells, non-volatile memory cells, erasable programmable read-only memory (EPROM) cells, read-only memory (ROM) cells, magnetic random access memory (MRAM) cells, sense amplifiers, inverters, operational amplifiers, adders, multiplexers, diplexers, multipliers, analog-to-digital (A/D) converters, digital-to-analog (D/A) converters, analog circuits, complementary-metal-oxide-semiconductor (CMOS) sensors, and/or charge coupled devices (CCD) or the like. The dielectric layers can be composed of a single layer of silicon oxide, silicon nitride, silicon oxynitride, silicon carbon nitride or silicon oxycarbide, or a composite layer made of the previously described materials. The fine-line metal layers may include aluminum, aluminum-copper-alloy, electroplated copper or other suitable metallic materials.

[0081] In each of the chips **120**, multiple metal traces or pads **26** provided by the topmost fine-line metal layer are formed over the semiconductor substrate **20**, on one of the dielectric layers and under the passivation layer **25**. Multiple openings **25*a*** in the passivation layer **25** are over multiple contact points of the metal traces or pads **26** and expose them, and the contact points of the metal traces or pads **26** are at bottoms of the openings **25*a***. Each of the openings **25*a*** may have a suitable width or diameter, e.g., between 0.5 and 100 micrometers, and preferably between 1 and 20 micrometers. The patterned metal layer **2** of each chip **120** can be formed on the contact points, exposed by the openings **25*a***, of the metal traces or pads **26** and on the passivation layer **25**, and can be connected to the contact points, exposed by the openings **25*a***, of the metal traces or pads **26** through the openings **25*a***. The metal traces or pads **26** may include aluminum, aluminum-copper-alloy or electroplated copper.

[0082] Each of the chips **120** can have multiple circuit interconnects, provided by the fine-line metal layers and the via plugs, between the semiconductor substrate **20** and the passivation layer **25**. The circuit interconnects may have a suitable thickness, e.g., between 10 nanometers and 2 micrometers, and may include, e.g., aluminum, aluminum-copper-alloy, electroplated copper or tungsten.

[0083] Alternatively, each of the chips **120** may further include multiple carbon nanotube interconnects between the semiconductor substrate **20** and the passivation layer **25**, and an organic polymer layer with a suitable thickness, e.g., greater than 3 micrometers, such as between 3 and 20 micrometers, and preferably between 5 and 12 micrometers, on the passivation layer **25**. Multiple openings in the organic polymer layer are over the contact points, exposed by the openings **25*a*** in the passivation layer **25**, of the metal traces or pads **26** and expose the contact points. The organic polymer layer can be made of a suitable material or materials, examples of which include, but are not limited to, polyimide, benzocyclobutane (BCB), polybenzoxazole (PBO), poly-phenylene oxide (PPO), silosane, SU-8 or epoxy. In this case, each of the chips **120** has the patterned metal layer **2** formed on the contact points of the metal traces or pads **26**, on the organic polymer layer and over the passivation layer **25**, and connected to the contact points of the metal traces or pads **26** through the openings in the organic polymer layer and through the openings **25*a*** in the passivation layer **25**. Each of the chips **120** may have the circuit interconnects connected to the transistors through the carbon nanotube interconnects.

[0084] The semiconductor substrate **20** may be made from a suitable substrate such as a silicon substrate or a gallium arsenide (GaAs) substrate. The substrate **20** may have a suitable thickness, e.g., greater than 1 micrometer, such as between 1 and 30 micrometers, between 2 and 10 microme-

ters, between 5 and 50 micrometers, between 10 and 100 micrometers or between 10 and 500 micrometers.

[0085] The passivation layer **25** can be formed by a suitable process or processes, e.g., a chemical vapor deposition (CVD) method. The passivation layer **25** can have a suitable thickness, for example, greater than 0.2 micrometers, such as between 0.3 and 1.5 micrometers. The passivation layer **25** can be made of silicon oxide (such as SiO_2), silicon nitride (such as Si_3N_4), silicon oxynitride, silicon oxycarbide, phosphosilicate glass (PSG), silicon carbon nitride or a composite of the previously described materials. The passivation layer **25** can include or be composed of one or more inorganic layers. For example, the passivation layer **25** can be composed of an oxide layer, such as silicon oxide or silicon oxycarbide, having a thickness, e.g., between 0.2 and 1.2 micrometers and a nitride layer, such as silicon nitride, silicon oxynitride or silicon carbon nitride, having a thickness, e.g., between 0.2 and 1.2 micrometers on the oxide layer. Alternatively, the passivation layer **25** can be a single layer of silicon nitride, silicon oxynitride or silicon carbon nitride having a thickness, e.g., between 0.3 and 1.5 micrometers. For exemplary embodiments, the passivation layer **25** in one of the chips **120** can include a topmost inorganic layer of the one of the chips **120**. For example, the topmost inorganic layer of the one of the chips **120** can be a layer of a nitrogen-containing compound, such as silicon nitride, silicon oxynitride, silicon carbon nitride or silicon carbon oxynitride, having a suitable thickness, e.g., greater than 0.2 micrometers, such as between 0.2 and 1.5 micrometers, or a layer of an oxygen-containing compound, such as silicon oxide, silicon oxynitride, silicon carbon oxide or silicon carbon oxynitride, having a suitable thickness, e.g., greater than 0.2 micrometers, such as between 0.2 and 1.5 micrometers.

[0086] Each of the chips **120** can have multiple metal interconnects or traces provided by the patterned metal layer **2** and formed on the contact points of the metal traces or pads **26** and on the passivation layer **25**. And each of the chips **120** has the metal pillars or bumps **24** formed on the metal interconnects or traces and connected to the contact points of the metal traces or pads **26** through the metal interconnects or traces and through the openings **25***a* in the passivation layer **25**. The metal interconnects or traces can be signal traces, power planes, power buses, power traces, ground planes, ground buses or ground traces. For example, in each of the chips **120**, one of the contact points of the metal traces or pads **26** can be connected to another one of the contact points of the metal traces or pads **26** through one of the metal interconnects or traces, and one or more of the metal pillars or bumps **14** on the one of the metal interconnects or traces can be connected to the two contact points of the two metal traces or pads **26** through the one of the metal interconnects or traces. And a gap is between the two metal traces or pads **26** providing the two contact points connected to each other through the one of the metal interconnects or traces provided by the patterned metal layer **2**.

[0087] Each of the chips **120** can have patterned metal layer **2** composed of an adhesion layer **21** on the contact points of the metal traces or pads **26** and on the passivation layer **25** or organic polymer layer, a seed layer **22** on the adhesion layer **21**, and a metal layer **23** on the seed layer **22**, and has the metal pillars or bumps **24** formed on the metal layer **23** of the patterned metal layer **2** and connected to the contact points of the metal traces or pads **26** through the patterned metal layer **2** and through the openings **25***a* in the passivation layer **25**.

[0088] The adhesion layer **21** may have a suitable thickness, e.g., less than 1 micrometer, such as between 1 nanometer and 0.5 micrometers, and preferably between 1 nanometer and 0.1 micrometers. The seed layer **22** may have a thickness, e.g., less than 1 micrometer, such as between 10 nanometers and 0.8 micrometers, and preferably between 20 nanometer and 0.5 micrometers. The material of the adhesion layer **21** may include titanium, a titanium-tungsten alloy, titanium nitride, chromium, tantalum, tantalum nitride, nickel or nickel vanadium. The material of the seed layer **22** may include copper, titanium-copper alloy, silver, gold, nickel, aluminum, platinum or palladium.

[0089] For example, when the adhesion layer **21** is a titanium-containing layer, such as a single layer of titanium-tungsten alloy, titanium or titanium nitride, having a thickness, e.g., less than 1 micrometer, such as between 1 nanometer and 0.5 micrometers, and preferably between 1 nanometer and 0.1 micrometers, on the contact points of the metal traces or pads **26** and on the passivation layer **25** or organic polymer layer, the seed layer **22** can be a copper layer, a silver layer, a titanium-copper-alloy layer, a gold layer, a nickel layer, an aluminum layer, a platinum layer or a palladium layer with a thickness, e.g., less than 1 micrometer, such as between 10 nanometers and 0.8 micrometers, and preferably between 20 nanometer and 0.5 micrometers, on the titanium-containing layer.

[0090] Alternatively, when the adhesion layer **21** is a tantalum-containing layer, such as a single layer of tantalum or tantalum nitride, having a thickness, e.g., less than 1 micrometer, such as between 1 nanometer and 0.5 micrometers, and preferably between 1 nanometer and 0.1 micrometers, on the contact points of the metal traces or pads **26** and on the passivation layer **25** or organic polymer layer, the seed layer **22** can be a copper layer, a silver layer, a titanium-copper-alloy layer, a gold layer, a nickel layer, an aluminum layer, a platinum layer or a palladium layer with a thickness, e.g., less than 1 micrometer, such as between 10 nanometers and 0.8 micrometers, and preferably between 20 nanometer and 0.5 micrometers, on the tantalum-containing layer.

[0091] Alternatively, when the adhesion layer **21** is a chromium-containing layer, such as a single layer of chromium, having a thickness, e.g., less than 1 micrometer, such as between 1 nanometer and 0.5 micrometers, and preferably between 1 nanometer and 0.1 micrometers, on the contact points of the metal traces or pads **26** and on the passivation layer **25** or organic polymer layer, the seed layer **22** can be a copper layer, a silver layer, a titanium-copper-alloy layer, a gold layer, a nickel layer, an aluminum layer, a platinum layer or a palladium layer with a thickness, e.g., less than 1 micrometer, such as between 10 nanometers and 0.8 micrometers, and preferably between 20 nanometer and 0.5 micrometers, on the chromium-containing layer.

[0092] Alternatively, when the adhesion layer **21** is a nickel-containing layer, such as a single layer of nickel or nickel vanadium, having a thickness, e.g., less than 1 micrometer, such as between 1 nanometer and 0.5 micrometers, and preferably between 1 nanometer and 0.1 micrometers, on the contact points of the metal traces or pads **26** and on the passivation layer **25** or organic polymer layer, the seed layer **22** can be a copper layer, a silver layer, a titanium-copper-alloy layer, a gold layer, a nickel layer, an aluminum layer, a platinum layer or a palladium layer with a thickness, e.g., less than 1 micrometer, such as between 10 nanometers

and 0.8 micrometers, and preferably between 20 nanometer and 0.5 micrometers, on the nickel-containing layer.

[0093] The metal layer **23** may have a thickness, e.g., greater than 1 micrometer, such as between 2 and 30 micrometers, and preferably between 3 and 10 micrometers. Sidewalls of the metal layer **23** are not covered by the adhesion layer **21** and the seed layer **22**. The metal layer **23** can be a single layer of copper, silver, gold, palladium, platinum, rhodium, ruthenium, rhenium or nickel, or a composite layer made of the previously described metals.

[0094] For example, the metal layer **23** can be a single copper layer having a thickness, e.g., greater than 1 micrometer, such as between 2 and 30 micrometers, and preferably between 3 and 10 micrometers, on the seed layer **22**, preferably the previously described copper or titanium-copper-alloy seed layer **22**.

[0095] Alternatively, the metal layer **23** can be a single silver layer having a thickness, e.g., greater than 1 micrometer, such as between 2 and 30 micrometers, and preferably between 3 and 10 micrometers, on the seed layer **22**, preferably the previously described silver seed layer **22**.

[0096] Alternatively, the metal layer **23** can be a single gold layer having a thickness, e.g., greater than 1 micrometer, such as between 2 and 30 micrometers, and preferably between 3 and 10 micrometers, on the seed layer **22**, preferably the previously described gold seed layer **22**.

[0097] Alternatively, the metal layer **23** can be a single nickel layer having a thickness, e.g., greater than 1 micrometer, such as between 2 and 30 micrometers, and preferably between 3 and 10 micrometers, on the seed layer **22**, preferably the previously described copper, nickel or titanium-copper-alloy seed layer **22**.

[0098] Alternatively, the metal layer **23** can be composed of an electroplated copper layer having a thickness, e.g., greater than 1 micrometer, such as between 2 and 30 micrometers, and preferably between 3 and 10 micrometers, on the seed layer **22**, preferably the previously described copper or titanium-copper-alloy seed layer **22**, a nickel layer having a thickness, e.g., greater than 1 micrometer, such as between 1 and 15 micrometers, and preferably between 2 and 5 micrometers, on the electroplated copper layer, and a gold or palladium layer having a thickness, e.g., between 0.005 and 1 micrometers, and preferably between 0.05 and 0.1 micrometers, on the nickel layer.

[0099] Each of the metal pillars or bumps **24** has a suitable thickness, e.g., or height greater than 5 micrometers, such as between 5 and 50 micrometers, and preferably between 10 and 20 micrometers, and less than that of each of the metal pillars or bumps **14**, and has a suitable width or diameter, e.g., between 5 and 100 micrometers, and preferably between 5 and 50 micrometers. The metal pillars or bumps **24** can be composed of a single layer of copper, silver, gold, palladium, platinum, rhodium, ruthenium, rhenium or nickel, or a composite layer made of the previously described metals.

[0100] For example, each of the chips **120** has the metal pillars or bumps **24** composed of a single copper layer having a thickness, e.g., greater than 5 micrometers, such as between 5 and 50 micrometers, and preferably between 10 and 20 micrometers, on the metal layer **23**, preferably the previously described copper layer **23**.

[0101] Alternatively, each of the chips **120** has the metal pillars or bumps **24** composed of a single silver layer having a thickness, e.g., greater than 5 micrometers, such as between 5 and 50 micrometers, and preferably between 10 and 20 micrometers, on the metal layer **23**, preferably the previously described silver layer **23**.

[0102] Alternatively, each of the chips **120** has the metal pillars or bumps **24** composed of a single gold layer having a thickness, e.g., greater than 5 micrometers, such as between 5 and 50 micrometers, and preferably between 10 and 20 micrometers, on the metal layer **23**, preferably the previously described gold layer **23**.

[0103] Alternatively, each of the chips **120** has the metal pillars or bumps **24** composed of a single nickel layer having a thickness, e.g., greater than 5 micrometers, such as between 5 and 50 micrometers, and preferably between 10 and 20 micrometers, on the metal layer **23**, preferably the previously described copper or nickel layer **23**.

[0104] Alternatively, each of the chips **120** has the metal pillars or bumps **24** can be composed of an electroplated copper layer having a thickness, e.g., greater than 5 micrometers, such as between 5 and 50 micrometers, and preferably between 10 and 20 micrometers, on the metal layer **23**, preferably the previously described copper layer **23**, a nickel layer having a thickness, e.g., greater than 1 micrometer, such as between 1 and 5 micrometers, on the electroplated copper layer, and a gold or palladium layer having a thickness, e.g., between 0.005 and 1 micrometers, and preferably between 0.05 and 0.1 micrometers, on the nickel layer.

[0105] Each chip **120** may include input/output (I/O) circuits serving for chip probing testing (CP testing), for build-in-self testing or for external signal connection, and one of the I/O circuits may have a total loading (total capacitance) between 15 pF (pico farad) and 50 pF. Each of the I/O circuits may include a driver, a receiver and/or an electro static discharge (ESD) circuit. Each of the chips **120** may have built-in self test (BIST) circuits for reducing the testing time for the system-in package or multichip module.

[0106] No matter where the chips **120** are provided, any one of the chips **120** can be a central-processing-unit (CPU) chip designed by x86 architecture, a central-processing-unit (CPU) chip designed by non x86 architectures, such as ARM, Strong ARM or MIPs, a baseband chip, a graphics-processing-unit (GPU) chip, a digital-signal-processing (DSP) chip, a wireless local area network (WLAN) chip, a memory chip, such as flash memory chip, dynamic-random-access-memory (DRAM) chip or statistic-random-access-memory (SRAM) chip, a logic chip, an analog chip, a power device, a regulator, a power management device, a global-positioning-system (GPS) chip, a "Bluetooth" chip, a system-on chip (SOC) including a graphics-processing-unit (GPU) circuit block, a wireless local area network (WLAN) circuit block and a central-processing-unit (CPU) circuit block designed by x86 architecture or by non x86 architectures, but not including any baseband circuit block, a system-on chip (SOC) including a baseband circuit block, a wireless local area network (WLAN) circuit block and a central-processing-unit (CPU) circuit block designed by x86 architecture or by non x86 architectures, but not including any graphics-processing-unit (GPU) circuit block, a system-on chip (SOC) including a baseband circuit block, a graphics-processing-unit (GPU) circuit block and a central-processing-unit (CPU) circuit block designed by x86 architecture or by non x86 architectures, but not including any wireless local area network (WLAN) circuit block, a system-on chip (SOC) including a baseband circuit block and a wireless local area network (WLAN) circuit block, but not including any graphics-pro-

cessing-unit (GPU) circuit block and any central-processing-unit (CPU) circuit block, or a system-on chip (SOC) including a graphics-processing-unit (GPU) circuit block and a wireless local area network (WLAN) circuit block, but not including any baseband circuit block and any central-processing-unit (CPU) circuit block. Alternatively, any one of the chips **120** can be a chip including a central-processing-unit (CPU) circuit block designed by x86 architecture or by non x86 architecture, a graphics-processing-unit (GPU) circuit block, a baseband circuit block, a digital-signal-processing (DSP) circuit block, a memory circuit block, a Bluetooth circuit block, a global-positioning-system (GPS) circuit block, a wireless local area network (WLAN) circuit block, and/or a modem circuit block.

[0107] FIG. **10** is a schematically top perspective view of the semi finished device shown in FIG. **9**, and FIG. **9** is the cross-sectional view cut along the line A-A' shown in FIG. **10**. Referring to FIG. **10**, circles **24** enclosing oblique lines indicate the metal pillars or bumps **24** preformed on the patterned metal layer **2**, shown in FIG. **9**, before the chips **120** are cut from a semiconductor wafer. Circles **14** enclosing no oblique lines indicate the metal pillars or bumps **14** preformed on the patterned metal layer **1**, shown in FIG. **9**, before the chips **120** are attached to the patterned metal layer **1** and to the dielectric or insulating layer **10**.

[0108] Referring to FIGS. **9** and **10**, multiple metal interconnects or traces **1***a* provided by the patterned metal layer **1** can be on or over the dielectric or insulating layer **10**. The metal pillars or bumps **14** can be on or over the metal interconnects or traces **1***a*. The metal interconnects or traces **1***a* can be signal traces, power planes, power buses, power traces, ground planes, ground buses, ground traces, or the like. There can be a number of chips **120**, e.g., two, attached to the metal interconnects or traces **1***a* and to the dielectric or insulating layer **10** by the glue/adhesive material **80**. Each of the chips **120** can have multiple metal interconnects or traces **2***a* provided by the patterned metal layer **2** and formed on the contact points, exposed by the openings **25***a*, of the metal traces or pads **26** and on the passivation layer **25**, and can have the metal pillars or bumps **24** formed on the metal interconnects or traces **2***a*. The metal interconnects or traces **2***a* can be signal traces, power planes, power buses, power traces, ground planes, ground buses, ground traces or the like. Each of the metal interconnects or traces **2***a* can be connected to one or more of the metal traces or pads **26**, such as two metal traces or pads **26**, through one or more of the openings **25***a* in the passivation layer **25**. For example, in each of the two chips **120**, one of the metal traces or pads **26** can be connected to another one of the metal traces or pads **26** through one of the metal interconnects or traces **2***a*. Each of the metal pillars or bumps **24** can be connected to one or more of the metal traces or pads **26**, such as two metal traces or pads **26**, through one of the metal interconnects or traces **2***a*. One of the two chips **120** shown in FIG. **10** can include a metal interconnect or trace **2***b* provided by the patterned metal layer **2** and formed on the contact points, exposed by the openings **25***a*, of the metal traces or pads **26** and on the passivation layer **25**. The metal interconnect or trace **2***b* can be a signal trace, a clock trace, a power plane, a power bus, a power trace, a ground plane, a ground bus, a ground trace, or the like. The metal interconnect or trace **2***b* can be free of any metal pillar or bump, in exemplary embodiments. Likewise, metal pillars or bumps can be omitted between the metal interconnect or trace **2***b* and a patterned metal layer **3** (e.g., as described in further detail below) for connecting the metal interconnect or trace **2***b* to the patterned metal layer **3**. The metal interconnect or trace **2***b* can connect one of the metal traces or pads **26** to another one of the metal traces or pads **26**. The metal interconnect or trace **2***b* can be enclosed by one of the metal interconnects or traces **2***a*.

[0109] Referring to FIG. **11**, after attaching the chips **120** to the metal layer **13** of the patterned metal layer **1** and to the dielectric or insulating layer **10**, a filling or encapsulating layer **85** can be formed over the substrate **110**, on the dielectric or insulating layer **10**, on the metal layer **13** of the patterned metal layer **1**, on the chips **120**, on the metal layer **23** of the patterned metal layer **2** and on tops of the metal pillars or bumps **14** and **24** by using a suitable process, such as for example, a molding process, a spin coating process, a lamination process, or a printing process. The filling or encapsulating layer **85** can be made of a suitable material. Examples of suitable materials for the encapsulating layer **85** can include a polymer layer, such as epoxy layer, polyimide layer, benzocyclobutane (BCB) layer, polybenzoxazole (PBO) layer, poly-phenylene oxide (PPO) layer, silosane layer or SU-8 layer, having a suitable thickness, e.g., between about 20 and about 500 micrometers, and preferably between 30 and 100 micrometers.

[0110] Next, referring to FIG. **12**, the filling or encapsulating layer **85** can be ground or polished by a grinding or polishing process, such as mechanical grinding process, mechanical polishing process or chemical mechanical polishing (CMP) process. Accordingly, top surfaces **14***a* of the metal pillars or bumps **14** and top surfaces **24***a* of the metal pillars or bumps **24** are exposed and are not covered by the filling or encapsulating layer **85**, and the top surfaces **24***a* of the metal pillars or bumps **24** are substantially coplanar with the top surfaces **14***a* of the metal pillars or bumps **14** and with a top surface **85***a* of the filling or encapsulating layer **85**.

[0111] After the grinding or polishing process, each of the metal pillars or bumps **24** has a suitable thickness, e.g., or height, e.g., greater than about 5 micrometers, such as between 5 and 50 micrometers, and preferably between 10 and 20 micrometers, and each of the metal pillars or bumps **14** has a suitable thickness, e.g., or height, e.g., greater than about 15 micrometers, such as between 15 and 520 micrometers, and preferably between 20 and 110 micrometers, and greater than that of each of the metal pillars or bumps **24**.

[0112] After the grinding or polishing process, each of the metal pillars or bumps **24** has a suitable width or diameter, e.g., between 5 and 100 micrometers, and preferably between 5 and 50 micrometers, and each of the metal pillars or ~~bumps **14**~~ has a suitable width or diameter, e.g., greater than 5 micrometers, such as between 5 and 300 micrometers, and preferably between 5 and 50 micrometers.

[0113] The metal pillars or bumps **24**, after the grinding or polishing process, can be composed of a single layer of copper, silver, gold, palladium, platinum, rhodium, ruthenium, rhenium or nickel, or a composite layer made of the previously described metals.

[0114] For example, each of the chips **120** can have metal pillars or bumps **24**, after the grinding or polishing process, composed of a single copper layer having a desired thickness, e.g., greater than 5 micrometers, such as between 5 and 50 micrometers, and preferably between 10 and 20 micrometers, on the metal layer **23**, preferably the previously described copper layer **23**.

[0115] Alternatively, each of the chips **120** can have metal pillars or bumps **24**, after the grinding or polishing process, that are composed of a single silver layer having a desired thickness, e.g., greater than 5 micrometers, such as between 5 and 50 micrometers, and preferably between 10 and 20 micrometers, on the metal layer **23**, preferably the previously described silver layer **23**.

[0116] Alternatively, each of the chips **120** has the metal pillars or bumps **24**, after the grinding or polishing process, composed of a single gold layer having a thickness, e.g., greater than 5 micrometers, such as between 5 and 50 micrometers, and preferably between 10 and 20 micrometers, on the metal layer **23**, preferably the previously described gold layer **23**.

[0117] Alternatively, each of the chips **120** has the metal pillars or bumps **24**, after the grinding or polishing process, composed of a single nickel layer having a thickness, e.g., greater than 5 micrometers, such as between 5 and 50 micrometers, and preferably between 10 and 20 micrometers, on the metal layer **23**, preferably the previously described copper or nickel layer **23**.

[0118] Alternatively, each of the chips **120** has the metal pillars or bumps **24**, after the grinding or polishing process, composed of an electroplated copper layer having a thickness, e.g., greater than 5 micrometers, such as between 5 and 50 micrometers, and preferably between 10 and 20 micrometers, on the metal layer **23**, preferably the previously described copper layer **23**, an electroplated or electroless plated nickel layer having a thickness, e.g., greater than 1 micrometer, such as between 1 and 5 micrometers, on the electroplated copper layer, and an electroplated or electroless plated gold layer having a thickness, e.g., between 0.005 and 1 micrometers, and preferably between 0.05 and 0.1 micrometers, on the electroplated or electroless plated nickel layer.

[0119] Alternatively, each of the chips **120** has the metal pillars or bumps **24**, after the grinding or polishing process, composed of an electroplated copper layer having a thickness, e.g., greater than 5 micrometers, such as between 5 and 50 micrometers, and preferably between 10 and 20 micrometers, on the metal layer **23**, preferably the previously described copper layer **23**, an electroplated or electroless plated nickel layer having a thickness, e.g., greater than 1 micrometer, such as between 1 and 5 micrometers, on the electroplated copper layer, and an electroplated or electroless plated palladium layer having a thickness, e.g., between 0.005 and 1 micrometers, and preferably between 0.05 and 0.1 micrometers, on the electroplated or electroless plated nickel layer.

[0120] The metal pillars or bumps **14**, after the grinding or polishing process, can be composed of a single layer of copper, silver, gold, palladium, platinum, rhodium, ruthenium, rhenium or nickel, or a composite layer made of the previously described metals.

[0121] For example, the metal pillars or bumps **14**, after the grinding or polishing process, can be composed of a single copper layer having a thickness, e.g., greater than 15 micrometers, such as between 15 and 520 micrometers, and preferably between 20 and 110 micrometers, on the metal layer **13**, preferably the previously described copper layer **13**.

[0122] Alternatively, the metal pillars or bumps **14**, after the grinding or polishing process, can be composed of a single silver layer having a thickness, e.g., greater than 15 micrometers, such as between 15 and 520 micrometers, and preferably between 20 and 110 micrometers, on the metal layer **13**, preferably the previously described silver layer **13**.

[0123] Alternatively, the metal pillars or bumps **14**, after the grinding or polishing process, can be composed of a single gold layer having a thickness, e.g., greater than 15 micrometers, such as between 15 and 520 micrometers, and preferably between 20 and 110 micrometers, on the metal layer **13**, preferably the previously described gold layer **13**.

[0124] Alternatively, the metal pillars or bumps **14**, after the grinding or polishing process, can be composed of a single nickel layer having a thickness, e.g., greater than 15 micrometers, such as between 15 and 520 micrometers, and preferably between 20 and 110 micrometers, on the metal layer **13**, preferably the previously described nickel or copper layer **13**.

[0125] Alternatively, the metal pillars or bumps **14**, after the grinding or polishing process, can be composed of an electroplated copper layer having a thickness, e.g., greater than 10 micrometers, such as between 15 and 500 micrometers, and preferably between 20 and 100 micrometers, on the metal layer **13**, preferably the previously described copper layer **13**, an electroplated or electroless plated nickel layer having a thickness, e.g., greater than 1 micrometer, such as between 1 and 15 micrometers, and preferably between 2 and 10 micrometers, on the electroplated copper layer, and an electroplated or electroless plated gold layer having a thickness, e.g., between 0.005 and 1 micrometers, and preferably between 0.05 and 0.1 micrometers, on the electroplated or electroless plated nickel layer.

[0126] Alternatively, the metal pillars or bumps **14**, after the grinding or polishing process, can be composed of an electroplated copper layer having a thickness, e.g., greater than 10 micrometers, such as between 15 and 500 micrometers, and preferably between 20 and 100 micrometers, on the metal layer **13**, preferably the previously described copper layer **13**, an electroplated or electroless plated nickel layer having a thickness, e.g., greater than 1 micrometer, such as between 1 and 15 micrometers, and preferably between 2 and 10 micrometers, on the electroplated copper layer, and an electroplated or electroless plated palladium layer having a thickness, e.g., between 0.005 and 1 micrometers, and preferably between 0.05 and 0.1 micrometers, on the electroplated or electroless plated nickel layer.

[0127] Next, referring to FIG. **13**, an adhesion layer **31** having a thickness, e.g., less than 1 micrometer, such as between 1 nanometer and 0.5 micrometers, can be formed on the top surface **85***a* of the filling or encapsulating layer **85**, on the top surfaces **24***a* of the metal pillars or bumps **24** and on the top surfaces **14***a* of the metal pillars or bumps **14** by using a physical-vapor deposition (PVD) process, such as sputtering process or evaporation process, or a chemical-vapor deposition (CVD) process. Next, a seed layer **32** having a thickness, e.g., less than 1 micrometer, such as between 10 nanometers and 0.8 micrometers, can be formed on the adhesion layer **31** by using a physical-vapor deposition (PVD) process, such as sputtering process or evaporation process, a chemical-vapor deposition (CVD) process or an electroless plating process. Next, a photoresist layer **92**, such as positive-type photoresist layer or negative-type photoresist layer (preferred), having a thickness, e.g., greater than 1 micrometer can be formed on the seed layer **32** by using a spin-on coating process or a lamination process. Next, the photoresist layer **92** is patterned with processes of lithographic, light exposure and development to form multiple openings **92***a* in the photoresist layer **92** exposing the seed layer **32**.

[0128] The material of the adhesion layer **31** may include titanium, a titanium-tungsten alloy, titanium nitride, chromium, tantalum, tantalum nitride, nickel or nickel vanadium. The material of the seed layer **32** may include copper, titanium-copper alloy, silver, gold, nickel, aluminum, platinum or palladium.

[0129] For example, when the adhesion layer **31** is formed by sputtering a titanium-containing layer, such as a single layer of titanium-tungsten alloy, titanium or titanium nitride, having a thickness, e.g., less than 1 micrometer, such as between 1 nanometer and 0.5 micrometers, on the top surface **85***a* of the filling or encapsulating layer **85**, on the top surfaces **24***a* of the metal pillars or bumps **24** and on the top surfaces **14***a* of the metal pillars or bumps **14**, the seed layer **32** can be formed by sputtering a copper layer, a silver layer, a titanium-copper-alloy layer, a gold layer, a nickel layer, an aluminum layer, a platinum layer or a palladium layer with a thickness, e.g., less than 1 micrometer, such as between 10 nanometers and 0.8 micrometers, on the titanium-containing layer.

[0130] Alternatively, when the adhesion layer **31** is formed by sputtering a tantalum-containing layer, such as a single layer of tantalum or tantalum nitride, having a thickness, e.g., less than 1 micrometer, such as between 1 nanometer and 0.5 micrometers, on the top surface **85***a* of the filling or encapsulating layer **85**, on the top surfaces **24***a* of the metal pillars or bumps **24** and on the top surfaces **14***a* of the metal pillars or bumps **14**, the seed layer **32** can be formed by sputtering a copper layer, a silver layer, a titanium-copper-alloy layer, a gold layer, a nickel layer, an aluminum layer, a platinum layer or a palladium layer with a thickness, e.g., less than 1 micrometer, such as between 10 nanometers and 0.8 micrometers, on the tantalum-containing layer.

[0131] Alternatively, when the adhesion layer **31** is formed by sputtering a chromium-containing layer, such as a single layer of chromium, having a thickness, e.g., less than 1 micrometer, such as between 1 nanometer and 0.5 micrometers, on the top surface **85***a* of the filling or encapsulating layer **85**, on the top surfaces **24***a* of the metal pillars or bumps **24** and on the top surfaces **14***a* of the metal pillars or bumps **14**, the seed layer **32** can be formed by sputtering a copper layer, a silver layer, a titanium-copper-alloy layer, a gold layer, a nickel layer, an aluminum layer, a platinum layer or a palladium layer with a thickness, e.g., less than 1 micrometer, such as between 10 nanometers and 0.8 micrometers, on the chromium-containing layer.

[0132] Alternatively, when the adhesion layer **31** is formed by sputtering a nickel-containing layer, such as a single layer of nickel or nickel vanadium, having a thickness, e.g., less than 1 micrometer, such as between 1 nanometer and 0.5 micrometers, on the top surface **85***a* of the filling or encapsulating layer **85**, on the top surfaces **24***a* of the metal pillars or bumps **24** and on the top surfaces **14***a* of the metal pillars or bumps **14**, the seed layer **32** can be formed by sputtering a copper layer, a silver layer, a titanium-copper-alloy layer, a gold layer, a nickel layer, an aluminum layer, a platinum layer or a palladium layer with a thickness, e.g., less than 1 micrometer, such as between 10 nanometers and 0.8 micrometers, on the nickel-containing layer.

[0133] Next, referring to FIG. **14**, a metal layer **33**, a conductive layer, having a thickness, e.g., greater than 1 micrometer, such as between 2 and 30 micrometers, and preferably between 3 and 10 micrometers, can be formed on the seed layer **32** exposed by the openings **92***a* and in the openings **92***a* by using an electroplating or electroless plating process. The metal layer **33** can be a single layer of copper, silver, gold, palladium, platinum, rhodium, ruthenium, rhenium or nickel, or a composite layer made of the previously described metals.

[0134] For example, the metal layer **33** can be a single metal layer formed by electroplating a copper layer, to a thickness, e.g., greater than 1 micrometer, such as between 2 and 30 micrometers, and preferably between 3 and 10 micrometers, in the openings **92***a* and on the seed layer **32**, preferably the previously described copper or titanium-copper-alloy seed layer **32**, exposed by the openings **92***a*.

[0135] Alternatively, the metal layer **33** can be a single metal layer formed by electroplating a gold layer, to a thickness, e.g., greater than 1 micrometer, such as between 2 and 30 micrometers, and preferably between 3 and 10 micrometers, in the openings **92***a* and on the seed layer **32**, preferably the previously described gold seed layer **32**, exposed by the openings **92***a*.

[0136] Alternatively, the metal layer **33** can be composed of double metal layers formed by electroplating a nickel layer, to a thickness, e.g., greater than 1 micrometer, such as between 2 and 30 micrometers, and preferably between 3 and 10 micrometers, in the openings **92***a* and on the seed layer **32**, preferably the previously described copper, nickel or titanium-copper-alloy seed layer **32**, exposed by the openings **92***a*, and then electroplating or electroless plating a gold layer or a palladium layer, to a thickness, e.g., between 0.005 and 10 micrometers, and preferably between 0.05 and 1 micrometers, in the openings **92***a* and on the electroplated nickel layer in the openings **92***a*.

[0137] Alternatively, the metal layer **33** can be composed of triple metal layers formed by electroplating a copper layer, to a thickness, e.g., greater than 1 micrometer, such as between 2 and 30 micrometers, and preferably between 3 and 10 micrometers, in the openings **92***a* and on the seed layer **32**, preferably the previously described copper or titanium-copper-alloy seed layer **32**, exposed by the openings **92***a*, next electroplating or electroless plating a nickel layer, to a thickness, e.g., between 1 and 15 micrometers or between 0.3 and 1 micrometers, in the openings **92***a* and on the electroplated copper layer in the openings **92***a*, and then electroplating or electroless plating a gold layer or a palladium layer, to a thickness, e.g., between 0.005 and 1 micrometers, and preferably between 0.05 and 0.1 micrometers, in the openings **92***a* and on the electroplated or electroless plated nickel layer in the openings **92***a*.

[0138] Referring to FIG. **15**, after forming the metal layer **33** illustrated in FIG. **14**, a photoresist layer **93**, such as positive-type photoresist layer or negative-type photoresist layer (preferred), having a thickness, e.g., greater than 1 micrometer can be formed on the photoresist layer **92** and on the metal layer **33** by a spin-on coating process or a lamination process. Next, the photoresist layer **93** is patterned with processes of lithographic, light exposure and development to form multiple cylindrical openings **93***a* in the photoresist layer **93** exposing multiple contact points of the metal layer **33**.

[0139] Next, referring to FIG. **16**, multiple metal pillars or bumps **34** (intra-chip metal pillars or bumps) having a thickness, e.g., or height greater than 15 micrometers, such as between 15 and 520 micrometers, and preferably between 20 and 110 micrometers, are formed in the cylindrical openings **93***a* and on the contact points of the metal layer **33** exposed by the cylindrical openings **93***a* using an electroplating or elec-

troless plating process. The metal pillars or bumps **34** can be composed of a single layer of copper, silver, gold, palladium, platinum, rhodium, ruthenium, rhenium or nickel, or a composite layer made of the previously described metals.

[0140] For example, the metal pillars or bumps **34** can be composed of a single metal layer formed by electroplating a copper layer, to a thickness, e.g., greater than 15 micrometers, such as between 15 and 520 micrometers, and preferably between 20 and 110 micrometers, in the cylindrical openings **93***a* and on the contact points of the metal layer **33**, preferably the previously described copper layer **33**, exposed by the cylindrical openings **93***a*.

[0141] Alternatively, the metal pillars or bumps **34** can be composed of a single metal layer formed by electroplating a gold layer, to a thickness, e.g., greater than 15 micrometers, such as between 15 and 520 micrometers, and preferably between 20 and 110 micrometers, in the cylindrical openings **93***a* and on the contact points of the metal layer **33**, preferably the previously described gold layer **33**, exposed by the cylindrical openings **93***a*.

[0142] Alternatively, the metal pillars or bumps **34** can be composed of a single metal layer formed by electroplating a nickel layer, to a thickness, e.g., greater than 15 micrometers, such as between 15 and 520 micrometers, and preferably between 20 and 110 micrometers, in the cylindrical openings **93***a* and on the contact points of the metal layer **33**, preferably the previously described nickel or copper layer **33**, exposed by the cylindrical openings **93***a*.

[0143] Alternatively, the metal pillars or bumps **34** can be composed of triple metal layers formed by electroplating a copper layer, to a thickness, e.g., greater than 10 micrometers, such as between 15 and 500 micrometers, and preferably between 20 and 100 micrometers, in the cylindrical openings **93***a* and on the contact points of the metal layer **33**, preferably the previously described copper layer **33**, exposed by the cylindrical openings **93***a*, next electroplating or electroless plating a nickel layer, to a thickness, e.g., between 1 and 15 micrometers or between 0.3 and 1 micrometers, in the cylindrical openings **93***a* and on the electroplated copper layer in the cylindrical openings **93***a*, and then electroplating or electroless plating a gold layer or a palladium layer, to a thickness, e.g., between 0.005 and 1 micrometers, and preferably between 0.05 and 0.1 micrometers, in the cylindrical openings **93***a* and on the electroplated or electroless plated nickel layer in the cylindrical openings **93***a*.

[0144] Referring to FIG. **17**, after forming the metal pillars or bumps **34**, the photoresist layers **92** and **93** are removed using a chemical solution containing amine or $NaCO_3$. Accordingly, the metal pillars or bumps **34** can be formed on the metal layer **33** after the photoresist layers **92** and **93** are removed.

[0145] Alternatively, another process for forming the metal pillars or bumps **34** on the metal layer **33** can be performed by the following steps. First, the photoresist layer **92** is removed using a chemical solution containing amine or $NaCO_3$ after forming the metal layer **33** illustrated in FIG. **14**. Next, the photoresist layer **93** illustrated in FIG. **15** can be formed on the metal layer **33** and on the seed layer **32** by a spin-on coating process or a lamination process. Next, the photoresist layer **93** is patterned with the processes of lithographic, light exposure and development to form the cylindrical openings **93***a* in the photoresist layer **93** exposing the contact points of the metal layer **33**. Next, the metal pillars or bumps **34** are formed in the cylindrical openings **93***a* and on the contact points of the metal layer **33** exposed by the cylindrical openings **93***a* using an electroplating or electroless plating process, which can be referred to as the step illustrated in FIG. **16**. Next, the photoresist layer **93** is removed using a chemical solution containing amine or $NaCO_3$. Accordingly, the metal pillars or bumps **34** can be formed on the metal layer **33** after the photoresist layer **93** is removed.

[0146] Alternatively, the process steps illustrated in FIGS. **15** and **16** can be repeated once more for making higher metal pillars or bumps, if necessary, that is, another photoresist layer is formed on the photoresist layer **93** using a spin-on coating process or a lamination process, next multiple cylindrical openings are formed in the another photoresist layer and expose the metal pillars or bumps **34**, next additional metal pillars or bumps are formed on the metal pillars or bumps **34** exposed by the cylindrical openings in the another photoresist layer and in the cylindrical openings in the another photoresist layer using an electroplating or electroless plating process, and then the another photoresist layer and the photoresist layers **92** and **93** are removed using a chemical solution containing amine or $NaCO_3$. The additional metal bumps can be composed of a single layer of copper, silver, gold, palladium, platinum, rhodium, ruthenium, rhenium or nickel, or a composite layer made of the previously described metals.

[0147] Referring to FIG. **18**, after removing the photoresist layers **92** and **93**, the seed layer **32** not under the metal layer **33** is removed by using a wet chemical etching process or a reactive ion etching (RIE) process, and then the adhesion layer **31** not under the metal layer **33** is removed by using a wet chemical etching process or a reactive ion etching (RIE) process.

[0148] Accordingly, the adhesion layer **31**, the seed layer **32** and the metal layer **33** compose a patterned metal layer **3** formed on the top surface **85***a* of the filling or encapsulating layer **85**, on the top surfaces **24***a* of the metal pillars or bumps **24** and on the top surfaces **14***a* of the metal pillars or bumps **14**. The metal pillars or bumps **34** can be formed on the metal layer **33** of the patterned metal layer **3**, and the pitch between neighboring or adjacent pairs of metal pillars or bumps **34** can be, e.g., greater than 100 micrometers, such as between 100 and 250 micrometers, or less than 100 micrometers, such as between 5 and 50 micrometers or between 50 and 100 micrometers. Each of the metal pillars or bumps **34** may have a suitable width or diameter, e.g., greater than 5 micrometers, such as between 5 and 300 micrometers, and preferably between 5 and 50 micrometers. The patterned metal layer **3** may include a metal plane, bus or trace, such as signal trace, clock bus, clock trace, power plane, power bus, power trace, ground plane, ground bus or ground trace, connecting one or more metal pillars or bumps **34** to one or more metal pillars or bumps **14**, to one or more metal pillars or bumps **24** or to multiple of the metal pillars or bumps **14** and **24**. A coverage ratio of an area of the patterned metal layer **3** covering a ground or polished surface including the top surfaces **14***a*, **24***a* and **85***a* shown in FIG. **12** to an area of the ground or polished surface ranges from 50% to 95%, and preferably ranges from 60% to 90%.

[0149] Next, referring to FIGS. **19** and **20**, a glue (or, adhesive) material **81** can be formed on the metal layer **33** of the patterned metal layer **3** and on the top surface **85***a* of the filling or encapsulating layer **85** by using a dispensing process, a lamination process or a screen-printing process, and then multiple chips **130** (two of them are shown) can be

attached to the metal layer **33** of the patterned metal layer **3** and to the top surface **85***a* of the filling or encapsulating layer **85** by the glue material **81**.

[0150] Alternatively, another technique to attach the chips **130** is by first forming the glue material **81** onto bottom surfaces of the chips **130** and then attaching the chips **130** to the metal layer **33** of the patterned metal layer **3** and to the top surface **85***a* of the filling or encapsulating layer **85** through the glue material **81** using, e.g. a thermal compression process.

[0151] Alternatively, after the step illustrated in FIG. **18**, a polymer layer may be formed on the metal layer **33** of the patterned metal layer **3** and on the top surface **85***a* of the filling or encapsulating layer **85**, and then the chips **130** can be attached to the polymer layer by the glue material **81**. The polymer layer can be a polyimide layer or a benzocyclobutene layer having a suitable thickness, e.g., between 2 and 30 micrometers. The glue material **81** can be formed on the polymer layer, and the chips **130** can be formed on the glue material **81**.

[0152] Examples of suitable glue material **81** include, but are not limited to, epoxy, polyimide, benzocyclobutane (BCB), polybenzoxazole (PBO), poly-phenylene oxide (PPO), silosane or SU-8, and may have a suitable thickness, between the metal layer **33** of the patterned metal layer **3** and any one of the chips **130**, greater than 3 micrometers, such as between 3 and 100 micrometers, and preferably between 5 and 50 micrometers or between 10 and 30 micrometers.

[0153] Each of the chips **130** includes a semiconductor substrate **40**, multiple transistors, such as NMOS transistors, PMOS transistors or bipolar transistors, in and/or over the semiconductor substrate **40**, multiple fine-line metal layers over the semiconductor substrate **40**, multiple dielectric layers over the semiconductor substrate **40** and between the fine-line metal layers, multiple via plugs of copper or tungsten in the dielectric layers, a passivation layer **45** over the semiconductor substrate **40**, over the transistors, over the dielectric layers and over the fine-line metal layers, a patterned metal layer **4** on the passivation layer **45**, and multiple metal pillars or bumps **44** (on-chip metal pillars or bumps) on the patterned metal layer **4**. In each of the chips **130**, a coverage ratio of an area of the patterned metal layer **4** covering a top surface of the passivation layer **45** to an area of the top surface ranges from 50% to 95%, and preferably can range from, for example, 60% to 90%. The transistors can be provided for NOR gates, NAND gates, AND gates, OR gates, flash memory cells, static random access memory (SRAM) cells, dynamic random access memory (DRAM) cells, non-volatile memory cells, erasable programmable read-only memory (EPROM) cells, read-only memory (ROM) cells, magnetic random access memory (MRAM) cells, sense amplifiers, inverters, operational amplifiers, adders, multiplexers, diplexers, multipliers, analog-to-digital (A/D) converters, digital-to-analog (D/A) converters, analog circuits, complementary-metal-oxide-semiconductor (CMOS) sensors, and/or charge coupled devices (CCD) or the like. The dielectric layers can be composed of a single layer of silicon oxide, silicon nitride, silicon oxynitride, silicon carbon nitride or silicon oxycarbide, or a composite layer made of the previously described materials. The fine-line metal layers may include aluminum, aluminum-copper-alloy or electroplated copper or other suitable metallic materials.

[0154] In each of the chips **130**, multiple metal traces or pads **46** provided by the topmost fine-line metal layer are formed over the semiconductor substrate **40**, on one of the dielectric layers and under the passivation layer **45**. Multiple openings **45***a* in the passivation layer **45** are over multiple contact points of the metal traces or pads **46** and expose them, and the contact points of the metal traces or pads **46** are at bottoms of the openings **45***a*. Each of the openings **45***a* has a suitable width or diameter, e.g., between 0.5 and 100 micrometers, and preferably between 1 and 20 micrometers. The patterned metal layer **4** of each chip **130** can be formed on the contact points, exposed by the openings **45***a*, of the metal traces or pads **46** and on the passivation layer **45**, and can be connected to the contact points, exposed by the openings **45***a*, of the metal traces or pads **46** through the openings **45***a*. The metal traces or pads **46** may include aluminum, aluminum-copper-alloy or electroplated copper.

[0155] Each of the chips **130** can have multiple circuit interconnects, provided by the fine-line metal layers and the via plugs, between the semiconductor substrate **40** and the passivation layer **45**. The circuit interconnects may have a suitable thickness, e.g., between 10 nanometers and 2 micrometers, and may include, e.g., aluminum, aluminum-copper-alloy, electroplated copper or tungsten.

[0156] Alternatively, each of the chips **130** may further include multiple carbon nanotube interconnects between the semiconductor substrate **40** and the passivation layer **45**, and an organic polymer layer with a suitable thickness, e.g., greater than 3 micrometers, such as between 3 and 20 micrometers, and preferably between 5 and 12 micrometers, on the passivation layer **45**. Multiple openings in the organic polymer layer are over the contact points, exposed by the openings **45***a* in the passivation layer **45**, of the metal traces or pads **46** and expose the contact points. The organic polymer layer can be made of a suitable material or materials, examples of which include, but are not limited to, polyimide, benzocyclobutane (BCB), polybenzoxazole (PBO), poly-phenylene oxide (PPO), silosane, SU-8 or epoxy. In this case, each of the chips **130** has the patterned metal layer **4** formed on the contact points of the metal traces or pads **46**, on the organic polymer layer and over the passivation layer **45**, and connected to the contact points of the metal traces or pads **46** through the openings in the organic polymer layer and through the openings **45***a* in the passivation layer **45**. Each of the chips **130** may have the circuit interconnects connected to the transistors through the carbon nanotube interconnects.

[0157] The semiconductor substrate **40** may be a silicon substrate or a gallium arsenide (GaAs) substrate, and may have a thickness, e.g., greater than 1 micrometer, such as between 1 and 30 micrometers, between 2 and 10 micrometers, between 5 and 50 micrometers, between 10 and 100 micrometers or between 10 and 500 micrometers.

[0158] The passivation layer **45** can be formed by a suitable process or processes, e.g., a chemical vapor deposition (CVD) method. The passivation layer **45** can have a thickness, e.g., greater than 0.2 micrometers, such as between 0.3 and 1.5 micrometers. The passivation layer **45** can be made of silicon oxide (such as SiO_2), silicon nitride (such as Si_3N_4), silicon oxynitride, silicon oxycarbide, phosphosilicate glass (PSG), silicon carbon nitride or a composite of the previously described materials. The passivation layer **45** can be include or composed of one or more inorganic layers. For example, the passivation layer **45** can be composed of an oxide layer, such as silicon oxide or silicon oxycarbide, having a thickness, e.g., between 0.2 and 1.2 micrometers and a nitride layer, such as silicon nitride, silicon oxynitride or silicon carbon nitride, having a thickness, e.g., between 0.2 and 1.2

micrometers on the oxide layer. Alternatively, the passivation layer **45** can be a single layer of silicon nitride, silicon oxynitride or silicon carbon nitride having a thickness, e.g., between 0.3 and 1.5 micrometers. For exemplary embodiments, the passivation layer **45** in one of the chips **130** can include a topmost inorganic layer of the one of the chips **130**. For example, the topmost inorganic layer of the one of the chips **130** can be a layer of a nitrogen-containing compound, such as silicon nitride, silicon oxynitride, silicon carbon nitride or silicon carbon oxynitride, having a suitable thickness, e.g., greater than 0.2 micrometers, such as between 0.2 and 1.5 micrometers, or a layer of an oxygen-containing compound, such as silicon oxide, silicon oxynitride, silicon carbon oxide or silicon carbon oxynitride, having a suitable thickness, e.g., greater than 0.2 micrometers, such as between 0.2 and 1.5 micrometers.

[0159] Each of the chips **130** has multiple metal interconnects or traces provided by the patterned metal layer **4** and formed on the contact points of the metal traces or pads **46** and on the passivation layer **45**. And each of the chips **130** has the metal pillars or bumps **44** formed on the metal interconnects or traces and connected to the contact points of the metal traces or pads **46** through the metal interconnects or traces and through the openings **45***a* in the passivation layer **45**. The metal interconnects or traces can be signal traces, power planes, power buses, power traces, ground planes, ground buses or ground traces. For example, in each of the chips **130**, one of the contact points of the metal traces or pads **46** can be connected to another one of the contact points of the metal traces or pads **46** through one of the metal interconnects or traces, and one or more of the metal pillars or bumps **44** on the one of the metal interconnects or traces can be connected to the two contact points of the two metal traces or pads **46** through the one of the metal interconnects or traces. And a gap is between the two metal traces or pads **46** providing the two contact points connected to each other through the one of the metal interconnects or traces provided by the patterned metal layer **4**.

[0160] Each of the chips **130** has the patterned metal layer **4** composed of an adhesion layer **41** on the contact points of the metal traces or pads **46** and on the passivation layer **45** or organic polymer layer, a seed layer **42** on the adhesion layer **41**, and a metal layer **43** on the seed layer **42**, and has the metal pillars or bumps **44** formed on the metal layer **43** of the patterned metal layer **4** and connected to the contact points of the metal traces or pads **46** through the patterned metal layer **4** and through the openings **45***a* in the passivation layer **45**.

[0161] The adhesion layer **41** may have a thickness, e.g., less than 1 micrometer, such as between 1 nanometer and 0.5 micrometers, and preferably between 1 nanometer and 0.1 micrometers. The seed layer **42** may have a thickness, e.g., less than 1 micrometer, such as between 10 nanometers and 0.8 micrometers, and preferably between 20 nanometer and 0.5 micrometers. The material of the adhesion layer **41** may include titanium, a titanium-tungsten alloy, titanium nitride, chromium, tantalum, tantalum nitride, nickel or nickel vanadium. The material of the seed layer **42** may include copper, titanium-copper alloy, silver, gold, nickel, aluminum, platinum or palladium.

[0162] For example, when the adhesion layer **41** is a titanium-containing layer, such as a single layer of titanium-tungsten alloy, titanium or titanium nitride, having a thickness, e.g., less than 1 micrometer, such as between 1 nanometer and 0.5 micrometers, and preferably between 1 nanometer and 0.1 micrometers, on the contact points of the metal traces or pads **46** and on the passivation layer **45** or organic polymer layer, the seed layer **42** can be a copper layer, a silver layer, a titanium-copper-alloy layer, a gold layer, a nickel layer, an aluminum layer, a platinum layer or a palladium layer with a thickness, e.g., less than 1 micrometer, such as between 10 nanometers and 0.8 micrometers, and preferably between 20 nanometer and 0.5 micrometers, on the titanium-containing layer.

[0163] Alternatively, when the adhesion layer **41** is a tantalum-containing layer, such as a single layer of tantalum or tantalum nitride, having a thickness, e.g., less than 1 micrometer, such as between 1 nanometer and 0.5 micrometers, and preferably between 1 nanometer and 0.1 micrometers, on the contact points of the metal traces or pads **46** and on the passivation layer **45** or organic polymer layer, the seed layer **42** can be a copper layer, a silver layer, a titanium-copper-alloy layer, a gold layer, a nickel layer, an aluminum layer, a platinum layer or a palladium layer with a thickness, e.g., less than 1 micrometer, such as between 10 nanometers and 0.8 micrometers, and preferably between 20 nanometer and 0.5 micrometers, on the tantalum-containing layer.

[0164] Alternatively, when the adhesion layer **41** is a chromium-containing layer, such as a single layer of chromium, having a thickness, e.g., less than 1 micrometer, such as between 1 nanometer and 0.5 micrometers, and preferably between 1 nanometer and 0.1 micrometers, on the contact points of the metal traces or pads **46** and on the passivation layer **45** or organic polymer layer, the seed layer **42** can be a copper layer, a silver layer, a titanium-copper-alloy layer, a gold layer, a nickel layer, an aluminum layer, a platinum layer or a palladium layer with a thickness, e.g., less than 1 micrometer, such as between 10 nanometers and 0.8 micrometers, and preferably between 20 nanometer and 0.5 micrometers, on the chromium-containing layer.

[0165] Alternatively, when the adhesion layer **41** is a nickel-containing layer, such as a single layer of nickel or nickel vanadium, having a thickness, e.g., less than 1 micrometer, such as between 1 nanometer and 0.5 micrometers, and preferably between 1 nanometer and 0.1 micrometers, on the contact points of the metal traces or pads **46** and on the passivation layer **45** or organic polymer layer, the seed layer **42** can be a copper layer, a silver layer, a titanium-copper-alloy layer, a gold layer, a nickel layer, an aluminum layer, a platinum layer or a palladium layer with a thickness, e.g., less than 1 micrometer, such as between 10 nanometers and 0.8 micrometers, and preferably between 20 nanometer and 0.5 micrometers, on the nickel-containing layer.

[0166] The metal layer **43** may have a thickness, e.g., greater than 1 micrometer, such as between 2 and 30 micrometers, and preferably between 3 and 10 micrometers. Sidewalls of the metal layer **43** are not covered by the adhesion layer **41** and the seed layer **42**. The metal layer **43** can be a single layer of copper, silver, gold, palladium, platinum, rhodium, ruthenium, rhenium or nickel, or a composite layer made of the previously described metals.

[0167] For example, the metal layer **43** can be a single copper layer having a thickness, e.g., greater than 1 micrometer, such as between 2 and 30 micrometers, and preferably between 3 and 10 micrometers, on the seed layer **42**, preferably the previously described copper or titanium-copper-alloy seed layer **42**.

[0168] Alternatively, the metal layer **43** can be a single silver layer having a thickness, e.g., greater than 1 microme-

ter, such as between 2 and 30 micrometers, and preferably between 3 and 10 micrometers, on the seed layer **42**, preferably the previously described silver seed layer **42**.

[0169] Alternatively, the metal layer **43** can be a single gold layer having a thickness, e.g., greater than 1 micrometer, such as between 2 and 30 micrometers, and preferably between 3 and 10 micrometers, on the seed layer **42**, preferably the previously described gold seed layer **42**.

[0170] Alternatively, the metal layer **43** can be a single nickel layer having a thickness, e.g., greater than 1 micrometer, such as between 2 and 30 micrometers, and preferably between 3 and 10 micrometers, on the seed layer **42**, preferably the previously described copper, nickel or titanium-copper-alloy seed layer **42**.

[0171] Alternatively, the metal layer **43** can be composed of an electroplated copper layer having a thickness, e.g., greater than 1 micrometer, such as between 2 and 30 micrometers, and preferably between 3 and 10 micrometers, on the seed layer **42**, preferably the previously described copper or titanium-copper-alloy seed layer **42**, a nickel layer having a thickness, e.g., greater than 1 micrometer, such as between 1 and 15 micrometers, and preferably between 2 and 5 micrometers, on the electroplated copper layer, and a gold or palladium layer having a thickness, e.g., between 0.005 and 1 micrometers, and preferably between 0.05 and 0.1 micrometers, on the nickel layer.

[0172] Each of the metal pillars or bumps **44** has a suitable thickness or height, e.g., greater than 5 micrometers, such as between 5 and 50 micrometers, and preferably between 10 and 20 micrometers, and preferably less than that of each of the metal pillars or bumps **34**, and has a suitable width or diameter, e.g., between 5 and 100 micrometers, and preferably between 5 and 50 micrometers. The metal pillars or bumps **44** can be composed of a single layer of copper, silver, gold, palladium, platinum, rhodium, ruthenium, rhenium or nickel, or a composite layer made of the previously described metals.

[0173] Each chip **130** may include input/output (I/O) circuits serving for chip probing testing (CP testing), for build-in-self testing or for external signal connection, and one of the I/O circuits may have a total loading (total capacitance) between 15 pF and 50 pF. Each of the I/O circuits may include a driver, a receiver and/or an electro static discharge (ESD) circuit. Each of the chips **130** may have built-in self test (BIST) circuits for reducing the testing time for the system-in package or multichip module.

[0174] No matter where the chips **130** are provided, any one of the chips **130** can be a central-processing-unit (CPU) chip designed by x86 architecture, a central-processing-unit (CPU) chip designed by non x86 architectures, such as ARM, Strong ARM or MIPs, a baseband chip, a graphics-processing-unit (GPU) chip, a digital-signal-processing (DSP) chip, a wireless local area network (WLAN) chip, a memory chip, such as flash memory chip, dynamic-random-access-memory (DRAM) chip or statistic-random-access-memory (SRAM) chip, a logic chip, an analog chip, a power device, a regulator, a power management device, a global-positioning-system (GPS) chip, a Bluetooth chip, a system-on chip (SOC) including a graphics-processing-unit (GPU) circuit block, a wireless local area network (WLAN) circuit block and a central-processing-unit (CPU) circuit block designed by x86 architecture or by non x86 architectures, but not including any baseband circuit block, a system-on chip (SOC) including a baseband circuit block, a wireless local area network (WLAN) circuit block and a central-processing-unit (CPU) circuit block designed by x86 architecture or by non x86 architectures, but not including any graphics-processing-unit (GPU) circuit block, a system-on chip (SOC) including a baseband circuit block, a graphics-processing-unit (GPU) circuit block and a central-processing-unit (CPU) circuit block designed by x86 architecture or by non x86 architectures, but not including any wireless local area network (WLAN) circuit block, a system-on chip (SOC) including a baseband circuit block and a wireless local area network (WLAN) circuit block, but not including any graphics-processing-unit (GPU) circuit block and any central-processing-unit (CPU) circuit block, or a system-on chip (SOC) including a graphics-processing-unit (GPU) circuit block and a wireless local area network (WLAN) circuit block, but not including any baseband circuit block and any central-processing-unit (CPU) circuit block. Alternatively, any one of the chips **130** can be a chip including a central-processing-unit (CPU) circuit block designed by x86 architecture or by non x86 architecture, a graphics-processing-unit (GPU) circuit block, a baseband circuit block, a digital-signal-processing (DSP) circuit block, a memory circuit block, a Bluetooth circuit block, a global-positioning-system (GPS) circuit block, a wireless local area network (WLAN) circuit block, and/or a modem circuit block.

[0175] Referring to FIG. **21**, after attaching the chips **130** to the metal layer **33** of the patterned metal layer **3** and to the top surface **85***a* of the filling or encapsulating layer **85**, a filling or encapsulating layer **86** is formed on the top surface **85***a* of the filling or encapsulating layer **85**, on the metal layer **33** of the patterned metal layer **3**, on the chips **130**, on the metal layer **43** of the patterned metal layer **4** and on tops of the metal pillars or bumps **34** and **44** by using a molding process, a spin coating process, a lamination process or a printing process. The filling or encapsulating layer **86** can be a polymer layer, such as epoxy layer, polyimide layer, benzocyclobutane (BCB) layer, polybenzoxazole (PBO) layer, poly-phenylene oxide (PPO) layer, silosane layer or SU-8 layer, having a thickness, e.g., between 20 and 500 micrometers, and preferably between 30 and 100 micrometers.

[0176] Next, referring to FIG. **22**, the filling or encapsulating layer **86** is ground or polished by a grinding or polishing process, such as mechanical grinding process, mechanical polishing process or chemical mechanical polishing (CMP) process. Accordingly, top surfaces **34***a* of the metal pillars or bumps **34** and top surfaces **44***a* of the metal pillars or bumps **44** are exposed and are not covered by the filling or encapsulating layer **86**, and the top surfaces **44***a* of the metal pillars or bumps **44** are substantially coplanar with the top surfaces **34***a* of the metal pillars or bumps **34** and with a top surface **86***a* of the filling or encapsulating layer **86**.

[0177] After the grinding or polishing process, each of the metal pillars or bumps **44** has a thickness, e.g., or height greater than 5 micrometers, such as between 5 and 50 micrometers, and preferably between 10 and 20 micrometers, and each of the metal pillars or bumps **34** has a thickness, e.g., or height greater than 15 micrometers, such as between 15 and 520 micrometers, and preferably between 20 and 110 micrometers, and greater than that of each of the metal pillars or bumps **44**.

[0178] After the grinding or polishing process, each of the metal pillars or bumps **44** has a suitable width or diameter, e.g., between 5 and 100 micrometers, and preferably between 5 and 50 micrometers. Each of the metal pillars or bumps **34**

can have a suitable width or diameter, e.g., greater than 5 micrometers, such as between 5 and 300 micrometers, and preferably between 5 and 50 micrometers.

[0179] The metal pillars or bumps **44**, after the grinding or polishing process, can be composed of a single layer of copper, silver, gold, palladium, platinum, rhodium, ruthenium, rhenium or nickel, or a composite layer made of the previously described metals.

[0180] For example, each of the chips **130** has the metal pillars or bumps **44**, after the grinding or polishing process, composed of a single copper layer having a thickness, e.g., greater than 5 micrometers, such as between 5 and 50 micrometers, and preferably between 10 and 20 micrometers, on the metal layer **43**, preferably the previously described copper layer **43**.

[0181] Alternatively, each of the chips **130** has the metal pillars or bumps **44**, after the grinding or polishing process, composed of a single silver layer having a thickness, e.g., greater than 5 micrometers, such as between 5 and 50 micrometers, and preferably between 10 and 20 micrometers, on the metal layer **43**, preferably the previously described silver layer **43**.

[0182] Alternatively, each of the chips **130** has the metal pillars or bumps **44**, after the grinding or polishing process, composed of a single gold layer having a thickness, e.g., greater than 5 micrometers, such as between 5 and 50 micrometers, and preferably between 10 and 20 micrometers, on the metal layer **43**, preferably the previously described gold layer **43**.

[0183] Alternatively, each of the chips **130** has the metal pillars or bumps **44**, after the grinding or polishing process, composed of a single nickel layer having a thickness, e.g., greater than 5 micrometers, such as between 5 and 50 micrometers, and preferably between 10 and 20 micrometers, on the metal layer **43**, preferably the previously described copper or nickel layer **43**.

[0184] Alternatively, each of the chips **130** has the metal pillars or bumps **44**, after the grinding or polishing process, composed of an electroplated copper layer having a thickness, e.g., greater than 5 micrometers, such as between 5 and 50 micrometers, and preferably between 10 and 20 micrometers, on the metal layer **43**, preferably the previously described copper layer **43**, an electroplated or electroless plated nickel layer having a thickness, e.g., greater than 1 micrometer, such as between 1 and 5 micrometers, on the electroplated copper layer, and an electroplated or electroless plated gold layer having a thickness, e.g., between 0.005 and 1 micrometers, and preferably between 0.05 and 0.1 micrometers, on the electroplated or electroless plated nickel layer.

[0185] Alternatively, each of the chips **130** has the metal pillars or bumps **44**, after the grinding or polishing process, composed of an electroplated copper layer having a thickness, e.g., greater than 5 micrometers, such as between 5 and 50 micrometers, and preferably between 10 and 20 micrometers, on the metal layer **43**, preferably the previously described copper layer **43**, an electroplated or electroless plated nickel layer having a thickness, e.g., greater than 1 micrometer, such as between 1 and 5 micrometers, on the electroplated copper layer, and an electroplated or electroless plated palladium layer having a thickness, e.g., between 0.005 and 1 micrometers, and preferably between 0.05 and 0.1 micrometers, on the electroplated or electroless plated nickel layer.

[0186] The metal pillars or bumps **34**, after the grinding or polishing process, can be composed of a single layer of copper, silver, gold, palladium, platinum, rhodium, ruthenium, rhenium or nickel, or a composite layer made of the previously described metals.

[0187] For example, the metal pillars or bumps **34**, after the grinding or polishing process, can be composed of a single copper layer having a thickness, e.g., greater than 15 micrometers, such as between 15 and 520 micrometers, and preferably between 20 and 110 micrometers, on the metal layer **33**, preferably the previously described copper layer **33**.

[0188] Alternatively, the metal pillars or bumps **34**, after the grinding or polishing process, can be composed of a single silver layer having a thickness, e.g., greater than 15 micrometers, such as between 15 and 520 micrometers, and preferably between 20 and 110 micrometers, on the metal layer **33**, preferably the previously described silver layer **33**.

[0189] Alternatively, the metal pillars or bumps **34**, after the grinding or polishing process, can be composed of a single gold layer having a thickness, e.g., greater than 15 micrometers, such as between 15 and 520 micrometers, and preferably between 20 and 110 micrometers, on the metal layer **33**, preferably the previously described gold layer **33**.

[0190] Alternatively, the metal pillars or bumps **34**, after the grinding or polishing process, can be composed of a single nickel layer having a thickness, e.g., greater than 15 micrometers, such as between 15 and 520 micrometers, and preferably between 20 and 110 micrometers, on the metal layer **33**, preferably the previously described nickel or copper layer **33**.

[0191] Alternatively, the metal pillars or bumps **34**, after the grinding or polishing process, can be composed of an electroplated copper layer having a thickness, e.g., greater than 10 micrometers, such as between 15 and 500 micrometers, and preferably between 20 and 100 micrometers, on the metal layer **33**, preferably the previously described copper layer **33**, an electroplated or electroless plated nickel layer having a thickness, e.g., greater than 1 micrometer, such as between 1 and 15 micrometers, and preferably between 2 and 10 micrometers, on the electroplated copper layer, and an electroplated or electroless plated gold layer having a thickness, e.g., between 0.005 and 1 micrometers, and preferably between 0.05 and 0.1 micrometers, on the electroplated or electroless plated nickel layer.

[0192] Alternatively, the metal pillars or bumps **34**, after the grinding or polishing process, can be composed of an electroplated copper layer having a thickness, e.g., greater than 10 micrometers, such as between 15 and 500 micrometers, and preferably between 20 and 100 micrometers, on the metal layer **33**, preferably the previously described copper layer **33**, an electroplated or electroless plated nickel layer having a thickness, e.g., greater than 1 micrometer, such as between 1 and 15 micrometers, and preferably between 2 and 10 micrometers, on the electroplated copper layer, and an electroplated or electroless plated palladium layer having a thickness, e.g., between 0.005 and 1 micrometers, and preferably between 0.05 and 0.1 micrometers, on the electroplated or electroless plated nickel layer.

[0193] Next, referring to FIG. **23**, an adhesion layer **51** having a thickness, e.g., less than 1 micrometer, such as between 1 nanometer and 0.5 micrometers, can be formed on the top surface **86***a* of the filling or encapsulating layer **86**, on the top surfaces **44***a* of the metal pillars or bumps **44** and on the top surfaces **34***a* of the metal pillars or bumps **34** by using a physical-vapor deposition (PVD) process, such as sputter-

ing process or evaporation process, or a chemical-vapor deposition (CVD) process. Next, a seed layer **52** having a thickness, e.g., less than 1 micrometer, such as between 10 nanometers and 0.8 micrometers, can be formed on the adhesion layer **51** by using a physical-vapor deposition (PVD) process, such as sputtering process or evaporation process, a chemical-vapor deposition (CVD) process or an electroless plating process. Next, a photoresist layer **94**, such as positive-type photoresist layer or negative-type photoresist layer (preferred), having a thickness, e.g., greater than 1 micrometer can be formed on the seed layer **52** by using a spin-on coating process or a lamination process. Next, the photoresist layer **94** is patterned with processes of lithographic, light exposure and development to form multiple openings **94***a* in the photoresist layer **94** exposing the seed layer **52**.

[0194] The material of the adhesion layer **51** may include titanium, a titanium-tungsten alloy, titanium nitride, chromium, tantalum, tantalum nitride, nickel or nickel vanadium. The material of the seed layer **52** may include copper, titanium-copper alloy, silver, gold, nickel, aluminum, platinum or palladium.

[0195] For example, when the adhesion layer **51** is formed by sputtering a titanium-containing layer, such as a single layer of titanium-tungsten alloy, titanium or titanium nitride, having a thickness, e.g., less than 1 micrometer, such as between 1 nanometer and 0.5 micrometers, on the top surface **86***a* of the filling or encapsulating layer **86**, on the top surfaces **44***a* of the metal pillars or bumps **44** and on the top surfaces **34***a* of the metal pillars or bumps **34**, the seed layer **52** can be formed by sputtering a copper layer, a silver layer, a titanium-copper-alloy layer, a gold layer, a nickel layer, an aluminum layer, a platinum layer or a palladium layer with a thickness, e.g., less than 1 micrometer, such as between 10 nanometers and 0.8 micrometers, on the titanium-containing layer.

[0196] Alternatively, when the adhesion layer **51** is formed by sputtering a tantalum-containing layer, such as a single layer of tantalum or tantalum nitride, having a thickness, e.g., less than 1 micrometer, such as between 1 nanometer and 0.5 micrometers, on the top surface **86***a* of the filling or encapsulating layer **86**, on the top surfaces **44***a* of the metal pillars or bumps **44** and on the top surfaces **34***a* of the metal pillars or bumps **34**, the seed layer **52** can be formed by sputtering a copper layer, a silver layer, a titanium-copper-alloy layer, a gold layer, a nickel layer, an aluminum layer, a platinum layer or a palladium layer with a thickness, e.g., less than 1 micrometer, such as between 10 nanometers and 0.8 micrometers, on the tantalum-containing layer.

[0197] Alternatively, when the adhesion layer **51** is formed by sputtering a chromium-containing layer, such as a single layer of chromium, having a thickness, e.g., less than 1 micrometer, such as between 1 nanometer and 0.5 micrometers, on the top surface **86***a* of the filling or encapsulating layer **86**, on the top surfaces **44***a* of the metal pillars or bumps **44** and on the top surfaces **34***a* of the metal pillars or bumps **34**, the seed layer **52** can be formed by sputtering a copper layer, a silver layer, a titanium-copper-alloy layer, a gold layer, a nickel layer, an aluminum layer, a platinum layer or a palladium layer with a thickness, e.g., less than 1 micrometer, such as between 10 nanometers and 0.8 micrometers, on the chromium-containing layer.

[0198] Alternatively, when the adhesion layer **51** is formed by sputtering a nickel-containing layer, such as a single layer of nickel or nickel vanadium, having a thickness, e.g., less than 1 micrometer, such as between 1 nanometer and 0.5 micrometers, on the top surface **86***a* of the filling or encapsulating layer **86**, on the top surfaces **44***a* of the metal pillars or bumps **44** and on the top surfaces **34***a* of the metal pillars or bumps **34**, the seed layer **52** can be formed by sputtering a copper layer, a silver layer, a titanium-copper-alloy layer, a gold layer, a nickel layer, an aluminum layer, a platinum layer or a palladium layer with a thickness, e.g., less than 1 micrometer, such as between 10 nanometers and 0.8 micrometers, on the nickel-containing layer.

[0199] Next, referring to FIG. **24**, a metal layer **53**, a conductive layer, having a thickness, e.g., greater than 1 micrometer, such as between 2 and 30 micrometers, and preferably between 3 and 10 micrometers, can be formed on the seed layer **52** exposed by the openings **94***a* and in the openings **94***a* by using an electroplating or electroless plating process. The metal layer **53** can be a single layer of copper, silver, gold, palladium, platinum, rhodium, ruthenium, rhenium or nickel, or a composite layer made of the previously described metals.

[0200] For example, the metal layer **53** can be a single metal layer formed by electroplating a copper layer, to a thickness, e.g., greater than 1 micrometer, such as between 2 and 30 micrometers, and preferably between 3 and 10 micrometers, in the openings **94***a* and on the seed layer **52**, preferably the previously described copper or titanium-copper-alloy seed layer **52**, exposed by the openings **94***a*.

[0201] Alternatively, the metal layer **53** can be a single metal layer formed by electroplating a gold layer, to a thickness, e.g., greater than 1 micrometer, such as between 2 and 30 micrometers, and preferably between 3 and 10 micrometers, in the openings **94***a* and on the seed layer **52**, preferably the previously described gold seed layer **52**, exposed by the openings **94***a*.

[0202] Alternatively, the metal layer **53** can be composed of double metal layers formed by electroplating a nickel layer, to a thickness, e.g., greater than 1 micrometer, such as between 2 and 30 micrometers, and preferably between 3 and 10 micrometers, in the openings **94***a* and on the seed layer **52**, preferably the previously described copper, nickel or titanium-copper-alloy seed layer **52**, exposed by the openings **94***a*, and then electroplating or electroless plating a gold layer or a palladium layer, to a thickness, e.g., between 0.005 and 10 micrometers, and preferably between 0.05 and 1 micrometers, in the openings **94***a* and on the electroplated nickel layer in the openings **94***a*.

[0203] Alternatively, the metal layer **53** can be composed of triple metal layers formed by electroplating a copper layer, to a thickness, e.g., greater than 1 micrometer, such as between 2 and 30 micrometers, and preferably between 3 and 10 micrometers, in the openings **94***a* and on the seed layer **52**, preferably the previously described copper or titanium-copper-alloy seed layer **52**, exposed by the openings **94***a*, next electroplating or electroless plating a nickel layer, to a thickness, e.g., between 1 and 15 micrometers or between 0.3 and 1 micrometers, in the openings **94***a* and on the electroplated copper layer in the openings **94***a*, and then electroplating or electroless plating a gold layer or a palladium layer, to a thickness, e.g., between 0.005 and 1 micrometers, and preferably between 0.05 and 0.1 micrometers, in the openings **94***a* and on the electroplated or electroless plated nickel layer in the openings **94***a*.

[0204] Referring to FIG. **25**, after forming the metal layer **53** illustrated in FIG. **24**, a photoresist layer **95**, such as positive-type photoresist layer or negative-type photoresist

layer (preferred), having a thickness, e.g., greater than 1 micrometer can be formed on the photoresist layer **94** and on the metal layer **53** by a spin-on coating process or a lamination process. Next, the photoresist layer **95** is patterned with processes of lithographic, light exposure and development to form multiple cylindrical openings **95***a* in the photoresist layer **95** exposing multiple contact points of the metal layer **53**.

[0205] Next, referring to FIG. **26**, multiple metal pillars or bumps **54** (intra-chip metal pillars or bumps) having a thickness, e.g., or height greater than 15 micrometers, such as between 15 and 520 micrometers, and preferably between 20 and 110 micrometers, are formed in the cylindrical openings **95***a* and on the contact points of the metal layer **53** exposed by the cylindrical openings **95***a* using an electroplating or electroless plating process. The metal pillars or bumps **54** can be composed of a single layer of copper, silver, gold, palladium, platinum, rhodium, ruthenium, rhenium or nickel, or a composite layer made of the previously described metals.

[0206] For example, the metal pillars or bumps **54** can be composed of a single metal layer formed by electroplating a copper layer, to a thickness, e.g., greater than 15 micrometers, such as between 15 and 520 micrometers, and preferably between 20 and 110 micrometers, in the cylindrical openings **95***a* and on the contact points of the metal layer **53**, preferably the previously described copper layer **53**, exposed by the cylindrical openings **95***a*.

[0207] Alternatively, the metal pillars or bumps **54** can be composed of a single metal layer formed by electroplating a gold layer, to a thickness, e.g., greater than 15 micrometers, such as between 15 and 520 micrometers, and preferably between 20 and 110 micrometers, in the cylindrical openings **95***a* and on the contact points of the metal layer **53**, preferably the previously described gold layer **53**, exposed by the cylindrical openings **95***a*.

[0208] Alternatively, the metal pillars or bumps **54** can be composed of a single metal layer formed by electroplating a nickel layer, to a thickness, e.g., greater than 15 micrometers, such as between 15 and 520 micrometers, and preferably between 20 and 110 micrometers, in the cylindrical openings **95***a* and on the contact points of the metal layer **53**, preferably the previously described nickel or copper layer **53**, exposed by the cylindrical openings **95***a*.

[0209] Alternatively, the metal pillars or bumps **54** can be composed of triple metal layers formed by electroplating a copper layer, to a thickness, e.g., greater than 10 micrometers, such as between 15 and 500 micrometers, and preferably between 20 and 100 micrometers, in the cylindrical openings **95***a* and on the contact points of the metal layer **53**, preferably the previously described copper layer **53**, exposed by the cylindrical openings **95***a*, next electroplating or electroless plating a nickel layer, to a thickness, e.g., between 1 and 15 micrometers or between 0.3 and 1 micrometers, in the cylindrical openings **95***a* and on the electroplated copper layer in the cylindrical openings **95***a*, and then electroplating or electroless plating a gold layer or a palladium layer, to a thickness, e.g., between 0.005 and 1 micrometers, and preferably between 0.05 and 0.1 micrometers, in the cylindrical openings **95***a* and on the electroplated or electroless plated nickel layer in the cylindrical openings **95***a*.

[0210] Referring to FIG. **27**, after forming the metal pillars or bumps **54**, the photoresist layers **94** and **95** are removed using a chemical solution containing amine or $NaCO_3$. Accordingly, the metal pillars or bumps **54** can be formed on the metal layer **53** after the photoresist layers **94** and **95** are removed.

[0211] Alternatively, another process for forming the metal pillars or bumps **54** on the metal layer **53** can be performed by the following steps. First, the photoresist layer **94** is removed using a chemical solution containing amine or $NaCO_3$ after forming the metal layer **53** illustrated in FIG. **24**. Next, the photoresist layer **95** illustrated in FIG. **25** can be formed on the metal layer **53** and on the seed layer **52** by a spin-on coating process or a lamination process. Next, the photoresist layer **95** is patterned with the processes of lithographic, light exposure and development to form the cylindrical openings **95***a* in the photoresist layer **95** exposing the contact points of the metal layer **53**. Next, the metal pillars or bumps **54** are formed in the cylindrical openings **95***a* and on the contact points of the metal layer **53** exposed by the cylindrical openings **95***a* using an electroplating or electroless plating process, which can be referred to as the step illustrated in FIG. **26**. Next, the photoresist layer **95** is removed using a chemical solution containing amine or $NaCO_3$. Accordingly, the metal pillars or bumps **54** can be formed on the metal layer **53** after the photoresist layer **95** is removed.

[0212] Alternatively, the process steps illustrated in FIGS. **25** and **26** can be repeated once more for making higher metal pillars or bumps, if necessary, that is, another photoresist layer is formed on the photoresist layer **95** using a spin-on coating process or a lamination process, next multiple cylindrical openings are formed in the another photoresist layer and expose the metal pillars or bumps **54**, next additional metal pillars or bumps are formed on the metal pillars or bumps **54** exposed by the cylindrical openings in the another photoresist layer and in the cylindrical openings in the another photoresist layer using an electroplating or electroless plating process, and then the another photoresist layer and the photoresist layers **94** and **95** are removed using a chemical solution containing amine or $NaCO_3$. The additional metal bumps can be composed of a single layer of copper, silver, gold, palladium, platinum, rhodium, ruthenium, rhenium or nickel, or a composite layer made of the previously described metals.

[0213] Referring to FIG. **28**, after removing the photoresist layers **94** and **95**, the seed layer **52** not under the metal layer **53** is removed by using a wet chemical etching process or a reactive ion etching (RIE) process, and then the adhesion layer **51** not under the metal layer **53** is removed by using a wet chemical etching process or a reactive ion etching (RIE) process.

[0214] Accordingly, the adhesion layer **51**, the seed layer **52** and the metal layer **53** compose a patterned metal layer **5** formed on the top surface **86***a* of the filling or encapsulating layer **86**, on the top surfaces **44***a* of the metal pillars or bumps **44** and on the top surfaces **34***a* of the metal pillars or bumps **34**. The metal pillars or bumps **54** are formed on the metal layer **53** of the patterned metal layer **5**, and the pitch between neighboring or adjacent pairs of metal pillars or bumps **54** can be, e.g., greater than 100 micrometers, such as between 100 and 250 micrometers, or less than 100 micrometers, such as between 5 and 50 micrometers or between 50 and 100 micrometers. Each of the metal pillars or bumps **54** may have a suitable width or diameter, e.g., greater than 5 micrometers, such as between 5 and 300 micrometers, and preferably between 5 and 50 micrometers. The patterned metal layer **5** may include a metal interconnect or trace, such as signal

trace, clock bus, clock trace, power plane, power bus, power trace, ground plane, ground bus or ground trace, connecting one or more of the metal pillars or bumps **54** to one or more of the metal pillars or bumps **34**, to one or more of the metal pillars or bumps **44**, or to multiple of the metal pillars or bumps **34** and multiple of the metal pillars or bumps **44**. A coverage ratio of an area of the patterned metal layer **5** covering a ground or polished surface including the top surfaces **34***a*, **44***a* and **86***a* shown in FIG. **22** to an area of the ground or polished surface ranges from 50% to 95%, and preferably ranges from 60% to 90%. Each of the chips **130** may have one of the metal traces or pads **46** connected to multiple of the metal traces or pads **26** in one or more of the chips **120** through, in sequence, the patterned metal layer **4**, one of the metal pillars or bumps **44**, the patterned metal layer **5**, one or more of the metal pillars or bumps **34**, the patterned metal layer **3**, multiple of the metal pillars or bumps **24**, and the patterned metal layer **2**.

[0215] Next, referring to FIGS. **29** and **30**, a glue (or, adhesive) material **82** can be formed on the metal layer **53** of the patterned metal layer **5** and on the top surface **86***a* of the filling or encapsulating layer **86** by using a dispensing process, a lamination process or a screen-printing process, and then multiple chips **140** can be attached to the metal layer **53** of the patterned metal layer **5** and to the top surface **86***a* of the filling or encapsulating layer **86** by the glue material **82**.

[0216] Alternatively, another technique to attach the chips **140** is by first forming the glue material **82** onto bottom surfaces of the chips **140** and then attaching the chips **140** to the metal layer **53** of the patterned metal layer **5** and to the top surface **86***a* of the filling or encapsulating layer **86** through the glue material **82** using, e.g., a thermal compression process.

[0217] Alternatively, after the step illustrated in FIG. **28**, a polymer layer may be formed on the metal layer **53** of the patterned metal layer **5** and on the top surface **86***a* of the filling or encapsulating layer **86**, and then the chips **140** can be attached to the polymer layer by the glue material **82**. The polymer layer can be a polyimide layer or a benzocyclobutene layer having a suitable thickness, e.g., between 2 and 30 micrometers. The glue material **82** can be formed on the polymer layer, and the chips **140** can be formed on the glue material **82**.

[0218] Examples of suitable glue material **82** include, but are not limited to, epoxy, polyimide, benzocyclobutane (BCB), polybenzoxazole (PBO), poly-phenylene oxide (PPO), silosane or SU-8, and may have a suitable thickness, between the metal layer **53** of the patterned metal layer **5** and any one of the chips **140**, greater than 3 micrometers, such as between 3 and 100 micrometers, and preferably between 5 and 50 micrometers or between 10 and 30 micrometers.

[0219] Each of the chips **140** includes a semiconductor substrate **60**, multiple transistors, such as NMOS transistors, PMOS transistors or bipolar transistors, in and/or over the semiconductor substrate **60**, multiple fine-line metal layers over the semiconductor substrate **60**, multiple dielectric layers over the semiconductor substrate **60** and between the fine-line metal layers, multiple via plugs of copper or tungsten in the dielectric layers, a passivation layer **65** over the semiconductor substrate **60**, over the transistors, over the dielectric layers and over the fine-line metal layers, a patterned metal layer **6** on the passivation layer **65**, and multiple metal pillars or bumps **64** (on-chip metal pillars or bumps) on the patterned metal layer **6**. In each of the chips **140**, a coverage ratio of an area of the patterned metal layer **6** covering a top surface of the passivation layer **65** to an area of the top surface ranges from 50% to 95%, and preferably can range from, for example, 60% to 90%. The transistors can be provided for NOR gates, NAND gates, AND gates, OR gates, flash memory cells, static random access memory (SRAM) cells, dynamic random access memory (DRAM) cells, non-volatile memory cells, erasable programmable read-only memory (EPROM) cells, read-only memory (ROM) cells, magnetic random access memory (MRAM) cells, sense amplifiers, operational amplifiers, adders, multiplexers, diplexers, multipliers, analog circuits, analog-to-digital (A/D) converters, digital-to-analog (D/A) converters, inverters, complementary-metal-oxide-semiconductor (CMOS) sensors, and/or charge coupled devices (CCD) or the like. The dielectric layers can be composed of a single layer of silicon oxide, silicon nitride, silicon oxynitride, silicon carbon nitride or silicon oxycarbide, or a composite layer made of the previously described materials. The fine-line metal layers may include aluminum, aluminum-copper-alloy or electroplated copper or other suitable metallic materials.

[0220] In each of the chips **140**, multiple metal traces or pads **66** provided by the topmost fine-line metal layer are formed over the semiconductor substrate **60**, on one of the dielectric layers and under the passivation layer **65**. Multiple openings **65***a* in the passivation layer **65** are over multiple contact points of the metal traces or pads **66** and expose them, and the contact points of the metal traces or pads **66** are at bottoms of the openings **65***a*. Each of the openings **65***a* has a suitable width or diameter, e.g., between 0.5 and 100 micrometers, and preferably between 1 and 20 micrometers. The patterned metal layer **6** of each chip **140** can be formed on the contact points, exposed by the openings **65***a*, of the metal traces or pads **66** and on the passivation layer **65**, and can be connected to the contact points, exposed by the openings **65***a*, of the metal traces or pads **66** through the openings **65***a*. The metal traces or pads **66** may include aluminum, aluminum-copper-alloy or electroplated copper.

[0221] Each of the chips **140** can have multiple circuit interconnects, provided by the fine-line metal layers and the via plugs, between the semiconductor substrate **60** and the passivation layer **65**. The circuit interconnects may have a suitable thickness, e.g., between 10 nanometers and 2 micrometers, and may include, e.g., aluminum, aluminum-copper-alloy, electroplated copper or tungsten.

[0222] Alternatively, each of the chips **140** may further include multiple carbon nanotube interconnects between the semiconductor substrate **60** and the passivation layer **65**, and an organic polymer layer with a suitable thickness, e.g., greater than 3 micrometers, such as between 3 and 20 micrometers, and preferably between 5 and 12 micrometers, on the passivation layer **65**. Multiple openings in the organic polymer layer are over the contact points, exposed by the openings **65***a* in the passivation layer **65**, of the metal traces or pads **66** and expose the contact points. The organic polymer layer can be made of a suitable material or materials, examples of which include, but are not limited to, polyimide, benzocyclobutane (BCB), polybenzoxazole (PBO), poly-phenylene oxide (PPO), silosane, SU-8 or epoxy. In this case, each of the chips **140** has the patterned metal layer **6** formed on the contact points of the metal traces or pads **66**, on the organic polymer layer and over the passivation layer **65**, and connected to the contact points of the metal traces or pads **66** through the openings in the organic polymer layer and through the openings **65***a* in the passivation layer **65**. Each of

the chips **140** may have the circuit interconnects connected to the transistors through the carbon nanotube interconnects.

[0223] The semiconductor substrate **60** may be a silicon substrate or a gallium arsenide (GaAs) substrate, and may have a thickness, e.g., greater than 1 micrometer, such as between 1 and 30 micrometers, between 2 and 10 micrometers, between 5 and 50 micrometers, between 10 and 100 micrometers or between 10 and 500 micrometers.

[0224] The passivation layer **65** can be formed by a suitable process or processes, e.g., a chemical vapor deposition (CVD) method. The passivation layer **65** can have a thickness, e.g., greater than 0.2 micrometers, such as between 0.3 and 1.5 micrometers. The passivation layer **65** can be made of silicon oxide (such as SiO_2), silicon nitride (such as Si_3N_4), silicon oxynitride, silicon oxycarbide, phosphosilicate glass (PSG), silicon carbon nitride or a composite of the previously described materials. The passivation layer **65** can include or be composed of one or more inorganic layers. For example, the passivation layer **65** can be composed of an oxide layer, such as silicon oxide or silicon oxycarbide, having a thickness, e.g., between 0.2 and 1.2 micrometers and a nitride layer, such as silicon nitride, silicon oxynitride or silicon carbon nitride, having a thickness, e.g., between 0.2 and 1.2 micrometers on the oxide layer. Alternatively, the passivation layer **65** can be a single layer of silicon nitride, silicon oxynitride or silicon carbon nitride having a thickness, e.g., between 0.3 and 1.5 micrometers. For exemplary embodiments, the passivation layer **65** in one of the chips **140** can include a topmost inorganic layer of the one of the chips **140**. For example, the topmost inorganic layer of the one of the chips **140** can be a layer of a nitrogen-containing compound, such as silicon nitride, silicon oxynitride, silicon carbon nitride or silicon carbon oxynitride, having a suitable thickness, e.g., greater than 0.2 micrometers, such as between 0.2 and 1.5 micrometers, or a layer of an oxygen-containing compound, such as silicon oxide, silicon oxynitride, silicon carbon oxide or silicon carbon oxynitride, having a suitable thickness, e.g., greater than 0.2 micrometers, such as between 0.2 and 1.5 micrometers.

[0225] Each of the chips **140** has multiple metal interconnects or traces provided by the patterned metal layer **6** and formed on the contact points of the metal traces or pads **66** and on the passivation layer **65**. And each of the chips **140** has the metal pillars or bumps **64** formed on the metal interconnects or traces and connected to the contact points of the metal traces or pads **66** through the metal interconnects or traces and through the openings **65***a* in the passivation layer **65**. The metal interconnects or traces can be signal traces, power planes, power buses, power traces, ground planes, ground buses or ground traces. For example, in each of the chips **140**, one of the contact points of the metal traces or pads **66** can be connected to another one of the contact points of the metal traces or pads **66** through one of the metal interconnects or traces, and one or more of the metal pillars or bumps **64** on the one of the metal interconnects or traces can be connected to the two contact points of the two metal traces or pads **66** through the one of the metal interconnects or traces. And a gap is between the two metal traces or pads **66** providing the two contact points connected to each other through the one of the metal interconnects or traces provided by the patterned metal layer **6**.

[0226] Each of the chips **140** has the patterned metal layer **6** composed of an adhesion layer **61** on the contact points of the metal traces or pads **66** and on the passivation layer **65** or organic polymer layer, a seed layer **62** on the adhesion layer **61**, and a metal layer **63** on the seed layer **62**, and has the metal pillars or bumps **64** formed on the metal layer **63** of the patterned metal layer **6** and connected to the contact points of the metal traces or pads **66** through the patterned metal layer **6** and through the openings **65***a* in the passivation layer **65**.

[0227] The adhesion layer **61** may have a thickness, e.g., less than 1 micrometer, such as between 1 nanometer and 0.5 micrometers, and preferably between 1 nanometer and 0.1 micrometers. The seed layer **62** may have a thickness, e.g., less than 1 micrometer, such as between 10 nanometers and 0.8 micrometers, and preferably between 20 nanometer and 0.5 micrometers. The material of the adhesion layer **61** may include titanium, a titanium-tungsten alloy, titanium nitride, chromium, tantalum, tantalum nitride, nickel or nickel vanadium. The material of the seed layer **62** may include copper, titanium-copper alloy, silver, gold, nickel, aluminum, platinum or palladium.

[0228] For example, when the adhesion layer **61** is a titanium-containing layer, such as a single layer of titanium-tungsten alloy, titanium or titanium nitride, having a thickness, e.g., less than 1 micrometer, such as between 1 nanometer and 0.5 micrometers, and preferably between 1 nanometer and 0.1 micrometers, on the contact points of the metal traces or pads **66** and on the passivation layer **65** or organic polymer layer, the seed layer **62** can be a copper layer, a silver layer, a titanium-copper-alloy layer, a gold layer, a nickel layer, an aluminum layer, a platinum layer or a palladium layer with a thickness, e.g., less than 1 micrometer, such as between 10 nanometers and 0.8 micrometers, and preferably between 20 nanometer and 0.5 micrometers, on the titanium-containing layer.

[0229] Alternatively, when the adhesion layer **61** is a tantalum-containing layer, such as a single layer of tantalum or tantalum nitride, having a thickness, e.g., less than 1 micrometer, such as between 1 nanometer and 0.5 micrometers, and preferably between 1 nanometer and 0.1 micrometers, on the contact points of the metal traces or pads **66** and on the passivation layer **65** or organic polymer layer, the seed layer **62** can be a copper layer, a silver layer, a titanium-copper-alloy layer, a gold layer, a nickel layer, an aluminum layer, a platinum layer or a palladium layer with a thickness, e.g., less than 1 micrometer, such as between 10 nanometers and 0.8 micrometers, and preferably between 20 nanometer and 0.5 micrometers, on the tantalum-containing layer.

[0230] Alternatively, when the adhesion layer **61** is a chromium-containing layer, such as a single layer of chromium, having a thickness, e.g., less than 1 micrometer, such as between 1 nanometer and 0.5 micrometers, and preferably between 1 nanometer and 0.1 micrometers, on the contact points of the metal traces or pads **66** and on the passivation layer **65** or organic polymer layer, the seed layer **62** can be a copper layer, a silver layer, a titanium-copper-alloy layer, a gold layer, a nickel layer, an aluminum layer, a platinum layer or a palladium layer with a thickness, e.g., less than 1 micrometer, such as between 10 nanometers and 0.8 micrometers, and preferably between 20 nanometer and 0.5 micrometers, on the chromium-containing layer.

[0231] Alternatively, when the adhesion layer **61** is a nickel-containing layer, such as a single layer of nickel or nickel vanadium, having a thickness, e.g., less than 1 micrometer, such as between 1 nanometer and 0.5 micrometers, and preferably between 1 nanometer and 0.1 micrometers, on the contact points of the metal traces or pads **66** and on

the passivation layer **65** or organic polymer layer, the seed layer **62** can be a copper layer, a silver layer, a titanium-copper-alloy layer, a gold layer, a nickel layer, an aluminum layer, a platinum layer or a palladium layer with a thickness, e.g., less than 1 micrometer, such as between 10 nanometers and 0.8 micrometers, and preferably between 20 nanometer and 0.5 micrometers, on the nickel-containing layer.

[0232] The metal layer **63** may have a thickness, e.g., greater than 1 micrometer, such as between 2 and 30 micrometers, and preferably between 3 and 10 micrometers. Sidewalls of the metal layer **63** are not covered by the adhesion layer **61** and the seed layer **62**. The metal layer **63** can be a single layer of copper, silver, gold, palladium, platinum, rhodium, ruthenium, rhenium or nickel, or a composite layer made of the previously described metals.

[0233] For example, the metal layer **63** can be a single copper layer having a thickness, e.g., greater than 1 micrometer, such as between 2 and 30 micrometers, and preferably between 3 and 10 micrometers, on the seed layer **62**, preferably the previously described copper or titanium-copper-alloy seed layer **62**.

[0234] Alternatively, the metal layer **63** can be a single silver layer having a thickness, e.g., greater than 1 micrometer, such as between 2 and 30 micrometers, and preferably between 3 and 10 micrometers, on the seed layer **62**, preferably the previously described silver seed layer **62**.

[0235] Alternatively, the metal layer **63** can be a single gold layer having a thickness, e.g., greater than 1 micrometer, such as between 2 and 30 micrometers, and preferably between 3 and 10 micrometers, on the seed layer **62**, preferably the previously described gold seed layer **62**.

[0236] Alternatively, the metal layer **63** can be a single nickel layer having a thickness, e.g., greater than 1 micrometer, such as between 2 and 30 micrometers, and preferably between 3 and 10 micrometers, on the seed layer **62**, preferably the previously described copper, nickel or titanium-copper-alloy seed layer **62**.

[0237] Alternatively, the metal layer **63** can be composed of an electroplated copper layer having a thickness, e.g., greater than 1 micrometer, such as between 2 and 30 micrometers, and preferably between 3 and 10 micrometers, on the seed layer **62**, preferably the previously described copper or titanium-copper-alloy seed layer **62**, a nickel layer having a thickness, e.g., greater than 1 micrometer, such as between 1 and 15 micrometers, and preferably between 2 and 5 micrometers, on the electroplated copper layer, and a gold or palladium layer having a thickness, e.g., between 0.005 and 1 micrometers, and preferably between 0.05 and 0.1 micrometers, on the nickel layer.

[0238] Each of the metal pillars or bumps **64** has a thickness, e.g., or height greater than 5 micrometers, such as between 5 and 50 micrometers, and preferably between 10 and 20 micrometers, and less than that of each of the metal pillars or bumps **54**, and has a suitable width or diameter, e.g., between 5 and 100 micrometers, and preferably between 5 and 50 micrometers. The metal pillars or bumps **64** can be composed of a single layer of copper, silver, gold, palladium, platinum, rhodium, ruthenium, rhenium or nickel, or a composite layer made of the previously described metals.

[0239] Each chip **140** may include input/output (I/O) circuits serving for chip probing testing (CP testing), for build-in-self testing or for external signal connection, and one of the I/O circuits may have a total loading (total capacitance) between 15 pF and 50 pF. Each of the I/O circuits may include a driver, a receiver and/or an electro static discharge (ESD) circuit. Each of the chips **140** may have built-in self test (BIST) circuits for reducing the testing time for the system-in package or multichip module.

[0240] No matter where the chips **140** are provided, any one of the chips **140** can be a central-processing-unit (CPU) chip designed by x86 architecture, a central-processing-unit (CPU) chip designed by non x86 architectures, such as ARM, Strong ARM or MIPs, a baseband chip, a graphics-processing-unit (GPU) chip, a digital-signal-processing (DSP) chip, a wireless local area network (WLAN) chip, a memory chip, such as flash memory chip, dynamic-random-access-memory (DRAM) chip or statistic-random-access-memory (SRAM) chip, a logic chip, an analog chip, a power device, a regulator, a power management device, a global-positioning-system (GPS) chip, a Bluetooth chip, a system-on chip (SOC) including a graphics-processing-unit (GPU) circuit block, a wireless local area network (WLAN) circuit block and a central-processing-unit (CPU) circuit block designed by x86 architecture or by non x86 architectures, but not including any baseband circuit block, a system-on chip (SOC) including a baseband circuit block, a wireless local area network (WLAN) circuit block and a central-processing-unit (CPU) circuit block designed by x86 architecture or by non x86 architectures, but not including any graphics-processing-unit (GPU) circuit block, a system-on chip (SOC) including a baseband circuit block, a graphics-processing-unit (GPU) circuit block and a central-processing-unit (CPU) circuit block designed by x86 architecture or by non x86 architectures, but not including any wireless local area network (WLAN) circuit block, a system-on chip (SOC) including a baseband circuit block and a wireless local area network (WLAN) circuit block, but not including any graphics-processing-unit (GPU) circuit block and any central-processing-unit (CPU) circuit block, or a system-on chip (SOC) including a graphics-processing-unit (GPU) circuit block and a wireless local area network (WLAN) circuit block, but not including any baseband circuit block and any central-processing-unit (CPU) circuit block. Alternatively, any one of the chips **140** can be a chip including a central-processing-unit (CPU) circuit block designed by x86 architecture or by non x86 architecture, a graphics-processing-unit (GPU) circuit block, a baseband circuit block, a digital-signal-processing (DSP) circuit block, a memory circuit block, a Bluetooth circuit block, a global-positioning-system (GPS) circuit block, a wireless local area network (WLAN) circuit block, and/or a modem circuit block.

[0241] Referring to FIG. **31**, after attaching the chips **140** to the metal layer **53** of the patterned metal layer **5** and to the top surface **86***a* of the filling or encapsulating layer **86**, a filling or encapsulating layer **87** is formed on the top surface **86***a* of the filling or encapsulating layer **86**, on the metal layer **53** of the patterned metal layer **5**, on the chips **140**, on the metal layer **63** of the patterned metal layer **6** and on tops of the metal pillars or bumps **54** and **64** by using a molding process, a spin coating process, a lamination process or a printing process. The filling or encapsulating layer **87** can be a polymer layer, such as epoxy layer, polyimide layer, benzocyclobutane (BCB) layer, polybenzoxazole (PBO) layer, poly-phenylene oxide (PPO) layer, silosane layer or SU-8 layer, having a thickness, e.g., between 20 and 500 micrometers, and preferably between 30 and 100 micrometers.

[0242] Next, referring to FIG. **32**, the filling or encapsulating layer **87** is ground or polished by a grinding or polishing

process, such as mechanical grinding process, mechanical polishing process or chemical mechanical polishing (CMP) process. Accordingly, top surfaces **54***a* of the metal pillars or bumps **54** and top surfaces **64***a* of the metal pillars or bumps **64** are exposed and are not covered by the filling or encapsulating layer **87**, and the top surfaces **64***a* of the metal pillars or bumps **64** are substantially coplanar with the top surfaces **54***a* of the metal pillars or bumps **54** and with a top surface **87***a* of the filling or encapsulating layer **87**.

[0243] After the grinding or polishing process, each of the metal pillars or bumps **64** has a thickness, e.g., or height greater than 5 micrometers, such as between 5 and 50 micrometers, and preferably between 10 and 20 micrometers, and each of the metal pillars or bumps **54** has a thickness, e.g., or height greater than 15 micrometers, such as between 15 and 520 micrometers, and preferably between 20 and 110 micrometers, and greater than that of each of the metal pillars or bumps **64**.

[0244] After the grinding or polishing process, each of the metal pillars or bumps **64** has a suitable width or diameter, e.g., between 5 and 100 micrometers, and preferably between 5 and 50 micrometers. Each of the metal pillars or bumps **54** has a suitable width or diameter, e.g., greater than 5 micrometers, such as between 5 and 300 micrometers, and preferably between 5 and 50 micrometers.

[0245] The metal pillars or bumps **64**, after the grinding or polishing process, can be composed of a single layer of copper, silver, gold, palladium, platinum, rhodium, ruthenium, rhenium or nickel, or a composite layer made of the previously described metals.

[0246] For example, each of the chips **140** has the metal pillars or bumps **64**, after the grinding or polishing process, composed of a single copper layer having a thickness, e.g., greater than 5 micrometers, such as between 5 and 50 micrometers, and preferably between 10 and 20 micrometers, on the metal layer **63**, preferably the previously described copper layer **63**.

[0247] Alternatively, each of the chips **140** has the metal pillars or bumps **64**, after the grinding or polishing process, composed of a single silver layer having a thickness, e.g., greater than 5 micrometers, such as between 5 and 50 micrometers, and preferably between 10 and 20 micrometers, on the metal layer **63**, preferably the previously described silver layer **63**.

[0248] Alternatively, each of the chips **140** has the metal pillars or bumps **64**, after the grinding or polishing process, composed of a single gold layer having a thickness, e.g., greater than 5 micrometers, such as between 5 and 50 micrometers, and preferably between 10 and 20 micrometers, on the metal layer **63**, preferably the previously described gold layer **63**.

[0249] Alternatively, each of the chips **140** has the metal pillars or bumps **64**, after the grinding or polishing process, composed of a single nickel layer having a thickness, e.g., greater than 5 micrometers, such as between 5 and 50 micrometers, and preferably between 10 and 20 micrometers, on the metal layer **63**, preferably the previously described copper or nickel layer **63**.

[0250] Alternatively, each of the chips **140** has the metal pillars or bumps **64**, after the grinding or polishing process, composed of an electroplated copper layer having a thickness, e.g., greater than 5 micrometers, such as between 5 and 50 micrometers, and preferably between 10 and 20 micrometers, on the metal layer **63**, preferably the previously described copper layer **63**, an electroplated or electroless plated nickel layer having a thickness, e.g., greater than 1 micrometer, such as between 1 and 5 micrometers, on the electroplated copper layer, and an electroplated or electroless plated gold layer having a thickness, e.g., between 0.005 and 1 micrometers, and preferably between 0.05 and 0.1 micrometers, on the electroplated or electroless plated nickel layer.

[0251] Alternatively, each of the chips **140** has the metal pillars or bumps **64**, after the grinding or polishing process, composed of an electroplated copper layer having a thickness, e.g., greater than 5 micrometers, such as between 5 and 50 micrometers, and preferably between 10 and 20 micrometers, on the metal layer **63**, preferably the previously described copper layer **63**, an electroplated or electroless plated nickel layer having a thickness, e.g., greater than 1 micrometer, such as between 1 and 5 micrometers, on the electroplated copper layer, and an electroplated or electroless plated palladium layer having a thickness, e.g., between 0.005 and 1 micrometers, and preferably between 0.05 and 0.1 micrometers, on the electroplated or electroless plated nickel layer.

[0252] The metal pillars or bumps **54**, after the grinding or polishing process, can be composed of a single layer of copper, silver, gold, palladium, platinum, rhodium, ruthenium, rhenium or nickel, or a composite layer made of the previously described metals.

[0253] For example, the metal pillars or bumps **54**, after the grinding or polishing process, can be composed of a single copper layer having a thickness, e.g., greater than 15 micrometers, such as between 15 and 520 micrometers, and preferably between 20 and 110 micrometers, on the metal layer **53**, preferably the previously described copper layer **53**.

[0254] Alternatively, the metal pillars or bumps **54**, after the grinding or polishing process, can be composed of a single silver layer having a thickness, e.g., greater than 15 micrometers, such as between 15 and 520 micrometers, and preferably between 20 and 110 micrometers, on the metal layer **53**, preferably the previously described silver layer **53**.

[0255] Alternatively, the metal pillars or bumps **54**, after the grinding or polishing process, can be composed of a single gold layer having a thickness, e.g., greater than 15 micrometers, such as between 15 and 520 micrometers, and preferably between 20 and 110 micrometers, on the metal layer **53**, preferably the previously described gold layer **53**.

[0256] Alternatively, the metal pillars or bumps **54**, after the grinding or polishing process, can be composed of a single nickel layer having a thickness, e.g., greater than 15 micrometers, such as between 15 and 520 micrometers, and preferably between 20 and 110 micrometers, on the metal layer **53**, preferably the previously described nickel or copper layer **53**.

[0257] Alternatively, the metal pillars or bumps **54**, after the grinding or polishing process, can be composed of an electroplated copper layer having a thickness, e.g., greater than 10 micrometers, such as between 15 and 500 micrometers, and preferably between 20 and 100 micrometers, on the metal layer **53**, preferably the previously described copper layer **53**, an electroplated or electroless plated nickel layer having a thickness, e.g., greater than 1 micrometer, such as between 1 and 15 micrometers, and preferably between 2 and 10 micrometers, on the electroplated copper layer, and an electroplated or electroless plated gold layer having a thickness, e.g., between 0.005 and 1 micrometers, and preferably

between 0.05 and 0.1 micrometers, on the electroplated or electroless plated nickel layer.

[0258] Alternatively, the metal pillars or bumps **54**, after the grinding or polishing process, can be composed of an electroplated copper layer having a thickness, e.g., greater than 10 micrometers, such as between 15 and 500 micrometers, and preferably between 20 and 100 micrometers, on the metal layer **53**, preferably the previously described copper layer **53**, an electroplated or electroless plated nickel layer having a thickness, e.g., greater than 1 micrometer, such as between 1 and 15 micrometers, and preferably between 2 and 10 micrometers, on the electroplated copper layer, and an electroplated or electroless plated palladium layer having a thickness, e.g., between 0.005 and 1 micrometers, and preferably between 0.05 and 0.1 micrometers, on the electroplated or electroless plated nickel layer.

[0259] Next, referring to FIG. **33**, an adhesion layer **71** having a thickness, e.g., less than 1 micrometer, such as between 1 nanometer and 0.5 micrometers, can be formed on the top surface **87***a* of the filling or encapsulating layer **87**, on the top surfaces **54***a* of the metal pillars or bumps **54** and on the top surfaces **64***a* of the metal pillars or bumps **64** by using a physical-vapor deposition (PVD) process, such as sputtering process or evaporation process, or a chemical-vapor deposition (CVD) process. Next, a seed layer **72** having a thickness, e.g., less than 1 micrometer, such as between 10 nanometers and 0.8 micrometers, can be formed on the adhesion layer **71** by using a physical-vapor deposition (PVD) process, such as sputtering process or evaporation process, a chemical-vapor deposition (CVD) process or an electroless plating process. Next, a photoresist layer **96**, such as positive-type photoresist layer or negative-type photoresist layer (preferred), having a thickness, e.g., greater than 1 micrometer can be formed on the seed layer **72** by using a spin-on coating process or a lamination process. Next, the photoresist layer **96** is patterned with processes of lithographic, light exposure and development to form multiple openings **96***a* in the photoresist layer **96** exposing the seed layer **72**.

[0260] The material of the adhesion layer **71** may include titanium, a titanium-tungsten alloy, titanium nitride, chromium, tantalum, tantalum nitride, nickel or nickel vanadium. The material of the seed layer **72** may include copper, titanium-copper-alloy, silver, gold, nickel, aluminum, platinum or palladium.

[0261] For example, when the adhesion layer **71** is formed by sputtering a titanium-containing layer, such as a single layer of titanium-tungsten alloy, titanium or titanium nitride, having a thickness, e.g., less than 1 micrometer, such as between 1 nanometer and 0.5 micrometers, on the top surface **87***a* of the filling or encapsulating layer **87**, on the top surfaces **54***a* of the metal pillars or bumps **54** and on the top surfaces **64***a* of the metal pillars or bumps **64**, the seed layer **72** can be formed by sputtering a copper layer, a silver layer, a titanium-copper-alloy layer, a gold layer, a nickel layer, an aluminum layer, a platinum layer or a palladium layer with a thickness, e.g., less than 1 micrometer, such as between 10 nanometers and 0.8 micrometers, on the titanium-containing layer.

[0262] Alternatively, when the adhesion layer **71** is formed by sputtering a tantalum-containing layer, such as a single layer of tantalum or tantalum nitride, having a thickness, e.g., less than 1 micrometer, such as between 1 nanometer and 0.5 micrometers, on the top surface **87***a* of the filling or encapsulating layer **87**, on the top surfaces **54***a* of the metal pillars or bumps **54** and on the top surfaces **64***a* of the metal pillars or bumps **64**, the seed layer **72** can be formed by sputtering a copper layer, a silver layer, a titanium-copper-alloy layer, a gold layer, a nickel layer, an aluminum layer, a platinum layer or a palladium layer with a thickness, e.g., less than 1 micrometer, such as between 10 nanometers and 0.8 micrometers, on the tantalum-containing layer.

[0263] Alternatively, when the adhesion layer **71** is formed by sputtering a chromium-containing layer, such as a single layer of chromium, having a thickness, e.g., less than 1 micrometer, such as between 1 nanometer and 0.5 micrometers, on the top surface **87***a* of the filling or encapsulating layer **87**, on the top surfaces **54***a* of the metal pillars or bumps **54** and on the top surfaces **64***a* of the metal pillars or bumps **64**, the seed layer **72** can be formed by sputtering a copper layer, a silver layer, a titanium-copper-alloy layer, a gold layer, a nickel layer, an aluminum layer, a platinum layer or a palladium layer with a thickness, e.g., less than 1 micrometer, such as between 10 nanometers and 0.8 micrometers, on the chromium-containing layer.

[0264] Alternatively, when the adhesion layer **71** is formed by sputtering a nickel-containing layer, such as a single layer of nickel or nickel vanadium, having a thickness, e.g., less than 1 micrometer, such as between 1 nanometer and 0.5 micrometers, on the top surface **87***a* of the filling or encapsulating layer **87**, on the top surfaces **54***a* of the metal pillars or bumps **54** and on the top surfaces **64***a* of the metal pillars or bumps **64**, the seed layer **72** can be formed by sputtering a copper layer, a silver layer, a titanium-copper-alloy layer, a gold layer, a nickel layer, an aluminum layer, a platinum layer or a palladium layer with a thickness, e.g., less than 1 micrometer, such as between 10 nanometers and 0.8 micrometers, on the nickel-containing layer.

[0265] Next, referring to FIG. **34**, a metal layer **73**, a conductive layer, having a thickness, e.g., greater than 1 micrometer, such as between 2 and 30 micrometers, and preferably between 3 and 10 micrometers, can be formed on the seed layer **72** exposed by the openings **96***a* and in the openings **96***a* by using an electroplating or electroless plating process. The metal layer **73** can be a single layer of copper, silver, gold, palladium, platinum, rhodium, ruthenium, rhenium or nickel, or a composite layer made of the previously described metals.

[0266] For example, the metal layer **73** can be a single metal layer formed by electroplating a copper layer, to a thickness, e.g., greater than 1 micrometer, such as between 2 and 30 micrometers, and preferably between 3 and 10 micrometers, in the openings **96***a* and on the seed layer **72**, preferably the previously described copper or titanium-copper-alloy seed layer **72**, exposed by the openings **96***a*.

[0267] Alternatively, the metal layer **73** can be a single metal layer formed by electroplating a gold layer, to a thickness, e.g., greater than 1 micrometer, such as between 2 and 30 micrometers, and preferably between 3 and 10 micrometers, in the openings **96***a* and on the seed layer **72**, preferably the previously described gold seed layer **72**, exposed by the openings **96***a*.

[0268] Alternatively, the metal layer **73** can be composed of double metal layers formed by electroplating a nickel layer, to a thickness, e.g., greater than 1 micrometer, such as between 2 and 30 micrometers, and preferably between 3 and 10 micrometers, in the openings **96***a* and on the seed layer **72**, preferably the previously described copper, nickel or titanium-copper-alloy seed layer **72**, exposed by the openings **96***a*, and then electroplating or electroless plating a gold layer

or a palladium layer, to a thickness, e.g., between 0.005 and 10 micrometers, and preferably between 0.05 and 1 micrometers, in the openings **96***a* and on the electroplated nickel layer in the openings **96***a*.

[0269] Alternatively, the metal layer **73** can be composed of triple metal layers formed by electroplating a copper layer, to a thickness, e.g., greater than 1 micrometer, such as between 2 and 30 micrometers, and preferably between 3 and 10 micrometers, in the openings **96***a* and on the seed layer **72**, preferably the previously described copper or titanium-copper-alloy seed layer **72**, exposed by the openings **96***a*, next electroplating or electroless plating a nickel layer, to a thickness, e.g., between 1 and 15 micrometers or between 0.3 and 1 micrometers, in the openings **96***a* and on the electroplated copper layer in the openings **96***a*, and then electroplating or electroless plating a gold layer or a palladium layer, to a thickness, e.g., between 0.005 and 1 micrometers, and preferably between 0.05 and 0.1 micrometers, in the openings **96***a* and on the electroplated or electroless plated nickel layer in the openings **96***a*.

[0270] Referring to FIG. **35**, after forming the metal layer **73** illustrated in FIG. **34**, the photoresist layer **96** is removed using a chemical solution containing amine or $NaCO_3$. Next, referring to FIG. **36**, the seed layer **72** not under the metal layer **73** is removed by using a wet chemical etching process or a reactive ion etching (RIE) process, and then the adhesion layer **71** not under the metal layer **73** is removed by using a wet chemical etching process or a reactive ion etching (RIE) process.

[0271] Accordingly, the adhesion layer **71**, the seed layer **72** and the metal layer **73** compose a patterned metal layer **7** formed on the top surface **87***a* of the filling or encapsulating layer **87**, on the top surfaces **54***a* of the metal pillars or bumps **54** and on the top surfaces **64***a* of the metal pillars or bumps **64**. The patterned metal layer **7** may include a metal plane, bus or trace, such as signal trace, clock bus, clock trace, power plane, power bus, power trace, ground plane, ground bus or ground trace, connecting one or more metal pillars or bumps **54**, connecting one or more metal pillars or bumps **64** or connecting one or more metal pillars or bumps **54** to one or more metal pillars or bumps **64**. A coverage ratio of an area of the patterned metal layer **7** covering a ground or polished surface including the top surfaces **54***a*, **64***a* and **87***a* shown in FIG. **32** to an area of the ground or polished surface ranges from 50% to 95%, and preferably ranges from 60% to 90%.

[0272] FIG. **37** is a schematically top perspective view of the semi finished device shown in FIG. **36**. Referring to FIG. **37**, circles **64** enclosing oblique lines indicate the metal pillars or bumps **64** preformed on the patterned metal layer **6**, shown in FIG. **36**, before the chips **140** are cut from a semiconductor wafer. Circles **54** enclosing no oblique lines indicate the metal pillars or bumps **54** preformed on the patterned metal layer **5**, shown in FIG. **36**, before the chips **140** are attached to the patterned metal layer **5** and to the top surface **86***a* of the filling or encapsulating layer **86**.

[0273] Referring to FIGS. **36** and **37**, the patterned metal layer **7** includes a clock interconnect, bus or trace **7***c*, a ground plane, bus or trace **7***g*, multiple power planes, buses or traces **7***p*, and multiple signal interconnects, traces or lines **7***s*. One or more metal pillars or bumps **54** can be connected to one or more metal pillars or bumps **64** through the clock interconnect, bus or trace **7***c*, through the ground plane, bus or trace **7***g*, through one of the power planes, buses or traces **7***p*, or through one of the signal interconnects, traces or lines **7***s*. Through one or more metal pillars or bumps **64**, each of the chips **140** can be connected to the clock interconnect, bus or trace **7***c*, to the ground plane, bus or trace **7***g*, to one or more power planes, buses or traces **7***p* or to one or more signal interconnects, traces or lines **7***s*. Each of the chips **140** has one of the metal traces or pads **66** connected to one or more of the metal traces or pads **46** in one or more of the chips **130** through, in sequence, the patterned metal layer **6**, one of the metal pillars or bumps **64**, the patterned metal layer **7**, such as the clock interconnect, bus or trace **7***c*, the ground plane, bus or trace **7***g*, the power plane, bus or trace **7***p* or the signal interconnect, trace or line **7***s*, one or more of the metal pillars or bumps **54**, the patterned metal layer **5**, one or more of the metal pillars or bumps **44**, and the patterned metal layer **4**. Each of the chips **140** has another one of the metal traces or pads **66** connected to one or more of the metal traces or pads **26** in one or more of the chips **120** through, in sequence, the patterned metal layer **6**, one of the metal pillars or bumps **64**, the patterned metal layer **7**, such as the clock interconnect, bus or trace **7***c*, the ground plane, bus or trace **7***g*, the power plane, bus or trace **7***p* or the signal interconnect, trace or line **7***s*, one or more of the metal pillars or bumps **54**, the patterned metal layer **5**, one or more of the metal pillars or bumps **34**, the patterned metal layer **3**, one or more of the metal pillars or bumps **24**, and the patterned metal layer **2**. Each of the chips **140** has another one of the metal traces or pads **66** connected to the patterned metal layer **1** through, in sequence, the patterned metal layer **6**, one of the metal pillars or bumps **64**, the patterned metal layer **7**, such as the clock interconnect, bus or trace **7***c*, the ground plane, bus or trace **7***g*, the power plane, bus or trace **7***p* or the signal interconnect, trace or line **7***s*, one of the metal pillars or bumps **54**, the patterned metal layer **5**, one of the metal pillars or bumps **34**, the patterned metal layer **3**, and one of the metal pillars or bumps **14**. One of the metal pillars or bumps **64**, of one of the chips **140**, can be connected to another one of the metal pillars or bumps **64**, of another one of the chips **140**, through the clock interconnect, bus or trace **7***c*, through the ground plane, bus or trace **7***g*, through one of the power planes, buses or traces **7***p*, or through one of the signal interconnects, traces or lines **7***s*. Each of the chips **140** may have two of the metal pillars or bumps **64** connected to each other through the ground plane, bus or trace **7***g*, through one of the power planes, buses or traces **7***p* or through one of the signal interconnects, traces or lines **7***s*.

[0274] Referring to FIG. **38**, after the step illustrated in FIG. **36**, a polymer layer **98**, such as positive-type photosensitive polymer layer or negative-type photosensitive polymer layer (preferred), can be formed on the metal layer **73** of the patterned metal layer **7** and on the top surface **87***a* of the filling or encapsulating layer **87** by using a spin coating process or a lamination process. Next, the polymer layer **98** is patterned with processes of lithographic, light exposure and development to form multiple openings **98***a* in the polymer layer **98** exposing multiple contact points of the metal layer **73**. Next, the polymer layer **98** is cured or heated at a temperature between 130 and 400° C. Accordingly, the polymer layer **98** having a thickness, e.g., between 1 and 20 micrometers, and preferably between 2 and 15 micrometers or between 5 and 10 micrometers, can be formed on the metal layer **73** of the patterned metal layer **7** and on the top surface **87***a* of the filling or encapsulating layer **87**, and the openings **98***a* in the polymer layer **98** are over the contact points of the metal layer **73** and expose them. The polymer layer **98** can be a polyimide layer, a polybenzoxazole (PBO) layer, a benzo-

cyclobutane (BCB) layer, an epoxy layer, a poly-phenylene oxide (PPO) layer, a silosane layer or a SU-8 layer.

[0275] Next, referring to FIG. **39**, an adhesion layer **8***a* having a thickness, e.g., less than 1 micrometer, such as between 1 nanometer and 0.5 micrometers, can be formed on the polymer layer **98** and on the contact points, exposed by the openings **98***a*, of the metal layer **73** by using a physical-vapor deposition (PVD) process, such as sputtering process or evaporation process, or a chemical-vapor deposition (CVD) process. Next, a seed layer **8***b* having a thickness, e.g., less than 1 micrometer, such as between 10 nanometers and 0.8 micrometers, can be formed on the adhesion layer **8***a* by using a physical-vapor deposition (PVD) process, such as sputtering process or evaporation process, a chemical-vapor deposition (CVD) process or an electroless plating process. Next, a metal layer **8***c*, a conductive layer, having a thickness, e.g., greater than 1 micrometer, such as between 2 and 30 micrometers, and preferably between 3 and 10 micrometers, can be formed on the seed layer **8***b* by using an electroplating or electroless plating process. Next, a metal layer **8***d*, a protection layer, having a thickness, e.g., between 0.2 and 20 micrometers, and preferably between 1 and 10 micrometers, can be formed on the metal layer **8***c* by using an electroplating or electroless plating process.

[0276] The material of the adhesion layer **8***a* may include titanium, a titanium-tungsten alloy, titanium nitride, chromium, tantalum, tantalum nitride, nickel or nickel vanadium. The material of the seed layer **8***b* may include copper, silver, gold or titanium-copper alloy.

[0277] For example, when the adhesion layer **8***a* is formed by sputtering a titanium-containing layer, such as a single layer of titanium-tungsten alloy, titanium or titanium nitride, having a thickness, e.g., less than 1 micrometer, such as between 1 nanometer and 0.5 micrometers, on the polymer layer **98** and on the contact points, exposed by the openings **98***a*, of the metal layer **73**, the seed layer **8***b* can be formed by sputtering a copper layer, a silver layer, a titanium-copper-alloy layer or a gold layer with a thickness, e.g., less than 1 micrometer, such as between 10 nanometers and 0.8 micrometers, on the titanium-containing layer.

[0278] Alternatively, when the adhesion layer **8***a* is formed by sputtering a tantalum-containing layer, such as a single layer of tantalum or tantalum nitride, having a thickness, e.g., less than 1 micrometer, such as between 1 nanometer and 0.5 micrometers, on the polymer layer **98** and on the contact points, exposed by the openings **98***a*, of the metal layer **73**, the seed layer **8***b* can be formed by sputtering a copper layer, a silver layer, a titanium-copper-alloy layer or a gold layer with a thickness, e.g., less than 1 micrometer, such as between 10 nanometers and 0.8 micrometers, on the tantalum-containing layer.

[0279] Alternatively, when the adhesion layer **8***a* is formed by sputtering a chromium-containing layer, such as a single layer of chromium, having a thickness, e.g., less than 1 micrometer, such as between 1 nanometer and 0.5 micrometers, on the polymer layer **98** and on the contact points, exposed by the openings **98***a*, of the metal layer **73**, the seed layer **8***b* can be formed by sputtering a copper layer, a silver layer, a titanium-copper-alloy layer or a gold layer with a thickness, e.g., less than 1 micrometer, such as between 10 nanometers and 0.8 micrometers, on the chromium-containing layer.

[0280] Alternatively, when the adhesion layer **8***a* is formed by sputtering a nickel-containing layer, such as a single layer of nickel or nickel vanadium, having a thickness, e.g., less than 1 micrometer, such as between 1 nanometer and 0.5 micrometers, on the polymer layer **98** and on the contact points, exposed by the openings **98***a*, of the metal layer **73**, the seed layer **8***b* can be formed by sputtering a copper layer, a silver layer, a titanium-copper-alloy layer or a gold layer with a thickness, e.g., less than 1 micrometer, such as between 10 nanometers and 0.8 micrometers, on the nickel-containing layer.

[0281] The metal layer **8***c* can be a single layer of copper, silver or gold. The metal layer **8***d* can be a single layer of nickel or chromium, or double layers composed of a nickel layer on the metal layer **8***c* and a gold layer on the nickel layer.

[0282] For example, when the metal layer **8***c* is a single metal layer formed by electroplating a copper layer, to a thickness, e.g., greater than 1 micrometer, such as between 2 and 30 micrometers, and preferably between 3 and 10 micrometers, on the seed layer **8***b*, preferably the previously described copper or titanium-copper-alloy seed layer **8***b*, the metal layer **8***d* can be a single metal layer formed by electroplating or electroless plating a nickel or chromium layer, to a thickness, e.g., between 0.2 and 20 micrometers, and preferably between 1 and 10 micrometers, on the electroplated copper layer.

[0283] Alternatively, when the metal layer **8***c* is a single metal layer formed by electroplating a silver layer, to a thickness, e.g., greater than 1 micrometer, such as between 2 and 30 micrometers, and preferably between 3 and 10 micrometers, on the seed layer **8***b*, preferably the previously described silver seed layer **8***b*, the metal layer **8***d* can be a single metal layer formed by electroplating or electroless plating a nickel or chromium layer, to a thickness, e.g., between 0.2 and 20 micrometers, and preferably between 1 and 10 micrometers, on the electroplated silver layer.

[0284] Alternatively, when the metal layer **8***c* is a single metal layer formed by electroplating a gold layer, to a thickness, e.g., greater than 1 micrometer, such as between 2 and 30 micrometers, and preferably between 3 and 10 micrometers, on the seed layer **8***b*, preferably the previously described gold seed layer **8***b*, the metal layer **8***d* can be a single metal layer formed by electroplating or electroless plating a nickel or chromium layer, to a thickness, e.g., between 0.2 and 20 micrometers, and preferably between 1 and 10 micrometers, on the electroplated gold layer.

[0285] Accordingly, the adhesion layer **8***a*, the seed layer **8***b* and the metal layers **8***c* and **8***d* compose a metal layer **8** formed on the polymer layer **98** and on the contact points, exposed by the openings **98***a*, of the metal layer **73**.

[0286] Alternatively, the metal layer **8** can be formed by electroless plating a first copper layer with a thickness, e.g., between 50 nanometers and 0.5 micrometers on the polymer layer **98** and on the contact points, exposed by the openings **98***a*, of the metal layer **73**, next electroplating a second copper layer with a thickness, e.g., greater than 1 micrometer, such as between 2 and 30 micrometers, and preferably between 3 and 10 micrometers, on the first copper layer, and then electroplating or electroless plating the previously described metal layer **8***d* on the second copper layer. For example, the metal layer **8***d* can be a single layer of nickel or chromium with a thickness, e.g., between 0.2 and 20 micrometers, and preferably between 1 and 10 micrometers, on the second copper layer, or can be double layers composed of a nickel layer on the second copper layer and a gold layer on the nickel layer. Accordingly, the metal layer **8** can be composed of an elec-

troless plated copper layer on the polymer layer **98** and on the contact points, exposed by the openings **98***a*, of the metal layer **73**, an electroplated copper layer on the electroless plated copper layer, and the previously described metal layer **8***d* on the electroplated copper layer.

[0287] The metal layer **8** can serve as a thermal spreading plane (or called heat spreading plane), and the heat generated by the chips **120**, **130** and **140** can be transferred to the metal layer **8** through the metal pillars or bumps **24**, **34**, **44**, **54** and **64**.

[0288] The metal layer **8** can be connected to one or more of the power planes, buses or traces **7***p*, shown in FIG. **37**, through one or more of the openings **98** in the polymer layer **98**, or to the ground plane, bus or trace **7***g*, shown in FIG. **37**, through one or more of the openings **98** in the polymer layer **98**. Each of the chips **140** may have one of the metal traces or pads **66** connected to the metal layer **8** through, in sequence, the patterned metal layer **6**, one of the metal pillars or bumps **64** and the patterned metal layer **7** such as the power plane, bus or trace **7***p* or the ground plane, bus or trace **7***g*.

[0289] The metal layer **8** can be connected to one of the metal traces or pads **46** of one of the chips **130** through, in sequence, the patterned metal layer **7**, such as the clock interconnect, bus or trace **7***c*, the ground plane, bus or trace **7***g*, the power plane, bus or trace **7***p* or the signal interconnect, trace or line **7***s*, one of the metal pillars or bumps **54**, the patterned metal layer **5**, one of the metal pillars or bumps **44**, and the patterned metal layer **4**, can be connected to one of the metal traces or pads **26** of one of the chips **120** through, in sequence, the patterned metal layer **7**, such as the clock interconnect, bus or trace **7***c*, the ground plane, bus or trace **7***g*, the power plane, bus or trace **7***p* or the signal interconnect, trace or line **7***s*, one of the metal pillars or bumps **54**, the patterned metal layer **5**, one of the metal pillars or bumps **34**, the patterned metal layer **3**, one of the metal pillars or bumps **24**, and the patterned metal layer **2**, and can be connected to the patterned metal layer **1** through, in sequence, the patterned metal layer **7**, such as the clock interconnect, bus or trace **7***c*, the ground plane, bus or trace **7***g*, the power plane, bus or trace **7***p* or the signal interconnect, trace or line **7***s*, one of the metal pillars or bumps **54**, the patterned metal layer **5**, one of the metal pillars or bumps **34**, the patterned metal layer **3**, and one of the metal pillars or bumps **14**.

[0290] Referring to FIG. **40**, after forming the metal layer **8** illustrated in FIG. **39**, the substrate **110** is thinned to a thickness, e.g., T**2** between 1 and 10 micrometers, between 3 and 50 micrometers or between 10 and 150 micrometers by mechanically grinding or chemically mechanically polishing (CMP) a backside of the substrate **110**.

[0291] Next, referring to FIG. **41**, with the step being illustrated with a reverse figure for simple explanation, an insulating layer **15** having a thickness, e.g., between 1 and 20 micrometers, and preferably between 3 and 15 micrometers or between 5 and 10 micrometers, can be formed on the thinned backside of the substrate **110** by a chemical-vapor deposition (CVD) process, a spin coating process or a lamination process. The insulating layer **15** can be silicon dioxide (SiO_2), silicon nitride, silicon oxynitride, silicon carbon nitride, polyimide, epoxy, benzocyclobutane (BCB), polybenzoxazole (PBO), poly-phenylene oxide (PPO), silosane or SU-8.

[0292] Next, referring to FIG. **42**, with the step being illustrated with a reverse figure for simple explanation, multiple through holes **16** are formed through the insulating layer **15**, through the substrate **110** and through the dielectric or insulating layer **10** using lithographic and etching processes or using a laser drilling process. Accordingly, the through holes **16** are formed in the substrate **110** and over multiple contact points of the adhesion layer **11** of the patterned metal layer **1**, and expose the contact points of the adhesion layer **11** of the patterned metal layer **1**. Each of the through holes **16** may have a suitable width or diameter, e.g., between 2 and 200 micrometers, and preferably between 5 and 100 micrometers or between 5 and 20 micrometers. After forming the through holes **16**, a dielectric layer (not shown) can be optionally formed on sidewalls of the through holes **16**.

[0293] Next, referring to FIG. **43**, with the step being illustrated with a reversed figure for simple explanation, multiple through-hole connections **17** having a suitable width or diameter, e.g., between 2 and 200 micrometers, and preferably between 5 and 100 micrometers or between 5 and 20 micrometers, are formed in the through holes **16** and on the contact points of the adhesion layer **11** using suitable processes, e.g., including a sputtering process, an electroplating process and a chemical mechanical polishing (CMP) process. The through-hole connections **17** may include copper, a Sn—Ag alloy, a Sn—Ag—Cu alloy or a Sn—Au alloy. Each of the through-hole connections **17** may have a surface **17***a* substantially coplanar with a surface **15***a* of the insulating layer **15**.

[0294] Next, referring to FIG. **44**, with the step being illustrated with a reverse figure for simple explanation, an adhesion layer **9***a* having a thickness, e.g., less than 1 micrometer, such as between 1 nanometer and 0.5 micrometers, can be formed on the surfaces **17***a* of the through-hole connections **17** and on the surface **15***a* of the insulating layer **15** by using a physical-vapor deposition (PVD) process, such as sputtering process or evaporation process, or a chemical-vapor deposition (CVD) process. Next, a seed layer **9***b* having a thickness, e.g., less than 1 micrometer, such as between 10 nanometers and 0.8 micrometers, can be formed on the adhesion layer **9***a* by using a physical-vapor deposition (PVD) process, such as sputtering process or evaporation process. Next, a photoresist layer **97**, such as positive-type photoresist layer or negative-type photoresist layer (preferred), having a thickness, e.g., greater than 1 micrometer can be formed on the seed layer **9***b* by using a spin-on coating process or a lamination process. Next, the photoresist layer **97** is patterned with processes of lithographic, light exposure and development to form multiple trace-shaped openings **97***a* in the photoresist layer **97** exposing the seed layer **9***b*.

[0295] The material of the adhesion layer **9***a* may include titanium, a titanium-tungsten alloy, titanium nitride, chromium, tantalum, tantalum nitride, nickel or nickel vanadium. The material of the seed layer **9***b* may include copper, silver, gold or titanium-copper alloy.

[0296] For example, when the adhesion layer **9***a* is formed by sputtering a titanium-containing layer, such as a single layer of titanium-tungsten alloy, titanium or titanium nitride, having a thickness, e.g., less than 1 micrometer, such as between 1 nanometer and 0.5 micrometers, on the surfaces **17***a* of the through-hole connections **17** and on the surface **15***a* of the insulating layer **15**, the seed layer **9***b* can be formed by sputtering a copper layer, a silver layer, a titanium-copper-alloy layer or a gold layer with a thickness, e.g., less than 1 micrometer, such as between 10 nanometers and 0.8 micrometers, on the titanium-containing layer.

[0297] Alternatively, when the adhesion layer **9***a* is formed by sputtering a tantalum-containing layer, such as a single layer of tantalum or tantalum nitride, having a thickness, e.g., less than 1 micrometer, such as between 1 nanometer and 0.5 micrometers, on the surfaces **17***a* of the through-hole connections **17** and on the surface **15***a* of the insulating layer **15**, the seed layer **9***b* can be formed by sputtering a copper layer, a silver layer, a titanium-copper-alloy layer or a gold layer with a thickness, e.g., less than 1 micrometer, such as between 10 nanometers and 0.8 micrometers, on the tantalum-containing layer.

[0298] Alternatively, when the adhesion layer **9***a* is formed by sputtering a chromium-containing layer, such as a single layer of chromium, having a thickness, e.g., less than 1 micrometer, such as between 1 nanometer and 0.5 micrometers, on the surfaces **17***a* of the through-hole connections **17** and on the surface **15***a* of the insulating layer **15**, the seed layer **9***b* can be formed by sputtering a copper layer, a silver layer, a titanium-copper-alloy layer or a gold layer with a thickness, e.g., less than 1 micrometer, such as between 10 nanometers and 0.8 micrometers, on the chromium-containing layer.

[0299] Alternatively, when the adhesion layer **9***a* is formed by sputtering a nickel-containing layer, such as a single layer of nickel or nickel vanadium, having a thickness, e.g., less than 1 micrometer, such as between 1 nanometer and 0.5 micrometers, on the surfaces **17***a* of the through-hole connections **17** and on the surface **15***a* of the insulating layer **15**, the seed layer **9***b* can be formed by sputtering a copper layer, a silver layer, a titanium-copper-alloy layer or a gold layer with a thickness, e.g., less than 1 micrometer, such as between 10 nanometers and 0.8 micrometers, on the nickel-containing layer.

[0300] Next, referring to FIG. **45**, with the step being illustrated with a reverse figure for simple explanation, a metal layer **9***c*, a conductive layer, having a thickness, e.g., greater than 1 micrometer, such as between 2 and 30 micrometers, and preferably between 3 and 10 micrometers, can be formed on the seed layer **9***b* exposed by the trace-shaped openings **97***a* and in the trace-shaped openings **97***a* by using an electroplating process or by using an electroplating process and an electroless plating process. The metal layer **9***c* can be a single layer of copper, silver, gold or nickel, or a composite layer made of the previously described metals.

[0301] For example, the metal layer **9***c* can be a single metal layer formed by electroplating a copper layer, to a thickness, e.g., greater than 1 micrometer, such as between 2 and 30 micrometers, and preferably between 3 and 10 micrometers, in the trace-shaped openings **97***a* and on the seed layer **9***b*, preferably the previously described copper or titanium-copper-alloy seed layer **9***b*, exposed by the trace-shaped openings **97***a*.

[0302] Alternatively, the metal layer **9***c* can be a single metal layer formed by electroplating a gold layer, to a thickness, e.g., greater than 1 micrometer, such as between 2 and 30 micrometers, and preferably between 3 and 10 micrometers, in the trace-shaped openings **97***a* and on the seed layer **9***b*, preferably the previously described gold seed layer **9***b*, exposed by the trace-shaped openings **97***a*.

[0303] Alternatively, the metal layer **9***c* can be composed of double metal layers formed by electroplating a copper layer, to a thickness, e.g., greater than 1 micrometer, such as between 2 and 30 micrometers, and preferably between 3 and 10 micrometers, in the trace-shaped openings **97***a* and on the seed layer **9***b*, preferably the previously described copper or titanium-copper-alloy seed layer **9***b*, exposed by the trace-shaped openings **97***a*, and then electroplating or electroless plating a nickel layer, to a thickness, e.g., greater than 1 micrometer, such as between 1 and 15 micrometers, and preferably between 2 and 5 micrometers, in the trace-shaped openings **97***a* and on the electroplated copper layer in the trace-shaped openings **97***a*.

[0304] Referring to FIG. **46**, with the step being illustrated with a reverse figure for simple explanation, after forming the metal layer **9***c*, the photoresist layer **97** is removed using a chemical solution containing amine or $NaCO_3$. Next, referring to FIG. **47**, with the step being illustrated with a reverse figure for simple explanation, the seed layer **9***b* not under the metal layer **9***c* is removed by using a wet chemical etching process or a reactive ion etching (RIE) process, and then the adhesion layer **9***a* not under the metal layer **9***c* is removed by using a wet chemical etching process or a reactive ion etching (RIE) process.

[0305] Accordingly, the adhesion layer **9***a*, the seed layer **9***b* and the metal layer **9***c* compose a patterned metal layer **9** formed on the surfaces **17***a* of the through-hole connections **17** and on the surface **15***a* of the insulating layer **15**. The patterned metal layer **9** may include a metal interconnect or trace, such as signal trace, clock bus, clock trace, power plane, power bus, power trace, ground plane, ground bus or ground trace, connected to the patterned metal layer **1** through one or more of the through-hole connections **17**. A coverage ratio of an area of the patterned metal layer **9** covering a bottom surface including the surfaces **15***a* and **17***a* shown in FIG. **43** to an area of the bottom surface ranges from 50% to 95%, and preferably ranges from 60% to 90%.

[0306] Next, referring to FIG. **48**, with the step being illustrated with a reverse figure for simple explanation, a polymer layer **99** can be formed on the metal layer **9***c* of the patterned metal layer **9** and on the surface **15***a* of the insulating layer **15** by using a spin coating process, a lamination process, a printing process or a spraying process. Next, the polymer layer **99** is patterned with processes of lithographic, light exposure with a 1× stepper and development to form multiple openings **99***a* exposing multiple contact points of the metal layer **9***c* of the patterned metal layer **9**. Next, the polymer layer **99** is cured or heated at a temperature between 130 and 400° C. Accordingly, the polymer layer **99** can be formed on the metal layer **9***c* of the patterned metal layer **9** and on the surface **15***a* of the insulating layer **15**, and the openings **99***a* in the polymer layer **99** are over the contact points of the metal layer **9***c* and expose them. The polymer layer **99** can be a polyimide layer, a polybenzoxazole (PBO) layer, a benzocyclobutane (BCB) layer, an epoxy layer, a poly-phenylene oxide (PPO) layer, a silosane layer or a SU-8 layer. The polymer layer **99** covering a surface of the metal layer **9***c* may have a thickness, e.g., between 1 and 20 micrometers, and preferably between 5 and 25 micrometers or between 5 and 10 micrometers.

[0307] Next, referring to FIG. **49**, with the step being illustrated with a reverse figure for simple explanation, an adhesion layer **18** having a thickness, e.g., less than 1 micrometer, such as between 1 nanometer and 0.5 micrometers, can be formed on the contact points of the metal layer **9***c* and on the polymer layer **99** by using a physical-vapor deposition (PVD) process, such as sputtering process or evaporation process, or a chemical-vapor deposition (CVD) process. Next, a seed layer **19** having a thickness, e.g., less than 1 micrometer, such as between 10 nanometers and 0.8 micrometers, can be

formed on the adhesion layer **18** by using a physical-vapor deposition (PVD) process, such as sputtering process or evaporation process, a chemical-vapor deposition (CVD) process or an electroless plating process. Next, a photoresist layer **89**, such as positive-type photoresist layer or negative-type photoresist layer (preferred), having a thickness, e.g., greater than 1 micrometer can be formed on the seed layer **19** by using a spin-on coating process or a lamination process. Next, the photoresist layer **89** is patterned with processes of lithographic, light exposure and development to form multiple cylinder-shaped openings **89***a* in the photoresist layer **89** exposing the seed layer **19**.

[0308] The material of the adhesion layer **18** may include titanium, a titanium-tungsten alloy, titanium nitride, chromium, tantalum, tantalum nitride, nickel or nickel vanadium. The material of the seed layer **19** may include copper, silver, gold or titanium-copper alloy.

[0309] For example, when the adhesion layer **18** is formed by sputtering a titanium-containing layer, such as a single layer of titanium-tungsten alloy, titanium or titanium nitride, having a thickness, e.g., less than 1 micrometer, such as between 1 nanometer and 0.5 micrometers, on the contact points of the metal layer **9***c* and on the polymer layer **99**, the seed layer **19** can be formed by sputtering a copper layer, a silver layer, a titanium-copper-alloy layer or a gold layer with a thickness, e.g., less than 1 micrometer, such as between 10 nanometers and 0.8 micrometers, on the titanium-containing layer.

[0310] Alternatively, when the adhesion layer **18** is formed by sputtering a tantalum-containing layer, such as a single layer of tantalum or tantalum nitride, having a thickness, e.g., less than 1 micrometer, such as between 1 nanometer and 0.5 micrometers, on the contact points of the metal layer **9***c* and on the polymer layer **99**, the seed layer **19** can be formed by sputtering a copper layer, a silver layer, a titanium-copper-alloy layer or a gold layer with a thickness, e.g., less than 1 micrometer, such as between 10 nanometers and 0.8 micrometers, on the tantalum-containing layer.

[0311] Alternatively, when the adhesion layer **18** is formed by sputtering a chromium-containing layer, such as a single layer of chromium, having a thickness, e.g., less than 1 micrometer, such as between 1 nanometer and 0.5 micrometers, on the contact points of the metal layer **9***c* and on the polymer layer **99**, the seed layer **19** can be formed by sputtering a copper layer, a silver layer, a titanium-copper-alloy layer or a gold layer with a thickness, e.g., less than 1 micrometer, such as between 10 nanometers and 0.8 micrometers, on the chromium-containing layer.

[0312] Alternatively, when the adhesion layer **18** is formed by sputtering a nickel-containing layer, such as a single layer of nickel or nickel vanadium, having a thickness, e.g., less than 1 micrometer, such as between 1 nanometer and 0.5 micrometers, on the contact points of the metal layer **9***c* and on the polymer layer **99**, the seed layer **19** can be formed by sputtering a copper layer, a silver layer, a titanium-copper-alloy layer or a gold layer with a thickness, e.g., less than 1 micrometer, such as between 10 nanometers and 0.8 micrometers, on the nickel-containing layer.

[0313] Next, referring to FIG. **50**, with the step being illustrated with a reverse figure for simple explanation, a metal layer **27**, a conductive layer, having a thickness, e.g., greater than 1 micrometer, such as between 2 and 100 micrometers, and preferably between 5 and 60 micrometers or between 10 and 50 micrometers, can be formed on the seed layer **19** exposed by the cylinder-shaped openings **89***a* and in the cylinder-shaped openings **89***a* by using an electroplating process and/or an electroless plating process. The metal layer **27** can be a single layer of copper, silver or gold.

[0314] For example, the metal layer **27** can be a single metal layer formed by electroplating a copper layer, to a thickness, e.g., greater than 1 micrometer, such as between 2 and 100 micrometers, and preferably between 5 and 60 micrometers or between 10 and 50 micrometers, in the cylinder-shaped openings **89***a* and on the seed layer **19**, preferably the previously described copper or titanium-copper-alloy seed layer **19**, exposed by the cylinder-shaped openings **89***a*.

[0315] Alternatively, the metal layer **27** can be a single metal layer formed by electroplating a silver layer, to a thickness, e.g., greater than 1 micrometer, such as between 2 and 100 micrometers, and preferably between 5 and 60 micrometers or between 10 and 50 micrometers, in the cylinder-shaped openings **89***a* and on the seed layer **19**, preferably the previously described silver seed layer **19**, exposed by the cylinder-shaped openings **89***a*.

[0316] Alternatively, the metal layer **27** can be a single metal layer formed by electroplating a gold layer, to a thickness, e.g., greater than 1 micrometer, such as between 2 and 100 micrometers, and preferably between 5 and 60 micrometers or between 10 and 50 micrometers, in the cylinder-shaped openings **89***a* and on the seed layer **19**, preferably the previously described gold seed layer **19**, exposed by the cylinder-shaped openings **89***a*.

[0317] After forming the metal layer **27**, a metal layer **28**, a barrier layer, having a thickness, e.g., between 0.2 and 10 micrometers, and preferably between 1 and 5 micrometers, can be formed in the cylinder-shaped openings **89***a* and on the metal layer **27** in the cylinder-shaped openings **89***a* by using an electroplating process and/or an electroless plating process. The metal layer **28** can be a single layer of nickel, nickel vanadium or gold, or a composite layer made of the previously described metals.

[0318] For example, the metal layer **28** can be a single metal layer formed by electroplating or electroless plating a nickel layer or a nickel-vanadium layer, to a thickness, e.g., between 0.2 and 10 micrometers, and preferably between 1 and 5 micrometers, in the cylinder-shaped openings **89***a* and on the metal layer **27**, preferably the previously described electroplated copper layer **27**, in the cylinder-shaped openings **89***a*.

[0319] Alternatively, the metal layer **28** can be composed of double metal layers formed by electroplating or electroless plating a nickel layer, to a thickness, e.g., between 0.2 and 10 micrometers, and preferably between 1 and 5 micrometers, in the cylinder-shaped openings **89***a* and on the metal layer **27**, preferably the previously described electroplated copper layer **27**, in the cylinder-shaped openings **89***a*, and then electroplating or electroless plating a gold layer, to a thickness, e.g., between 0.005 and 1 micrometers, and preferably between 0.05 and 0.1 micrometers, in the cylinder-shaped openings **89***a* and on the electroplated or electroless plated nickel layer in the cylinder-shaped openings **89***a*.

[0320] After forming the metal layer **28**, a solder layer **29** having a thickness, e.g., greater than 5 micrometers, such as between 5 and 400 micrometers, and preferably between 10 and 100 micrometers, can be formed in the cylinder-shaped openings **89***a* and on the metal layer **28** in the cylinder-shaped openings **89***a* by using an electroplating process and/or an electroless plating process. The solder layer **29** can be a bismuth-containing layer, an indium-containing layer or a

tin-containing layer of a tin-lead alloy, a tin-silver alloy, a tin-silver-copper alloy or a tin-gold alloy.

[0321] For example, the solder layer **29** can be a single metal layer formed by electroplating a bismuth-containing layer, an indium-containing layer or a tin-containing layer of a tin-lead alloy, a tin-silver alloy, a tin-silver-copper alloy or a tin-gold alloy, to a thickness, e.g., greater than 5 micrometers, such as between 5 and 400 micrometers, and preferably between 10 and 100 micrometers, in the cylinder-shaped openings **89***a* and on the metal layer **28**, preferably the previously described electroplated or electroless plated nickel layer **28**, in the cylinder-shaped openings **89***a*.

[0322] Referring to FIG. **51**, with the step being illustrated with a reverse figure for simple explanation, after forming the solder layer **29** illustrated in FIG. **50**, the photoresist layer **89** is removed using a chemical solution containing amine or $NaCO_3$. Next, the seed layer **19** not under the metal layer **27** is removed by using a wet chemical etching process or a reactive ion etching (RIE) process, and then the adhesion layer **18** not under the metal layer **27** is removed by using a wet chemical etching process or a reactive ion etching (RIE) process.

[0323] Accordingly, the adhesion layer **18**, the seed layer **19** and the metal layers **27** and **28** compose an under bump metallurgic (UBM) layer formed on the contact points of the metal layer **9***c* and on the polymer layer **99**, and the solder layer **29** is formed on the metal layer **28**, preferably the previously described electroplated or electroless plated nickel layer **28**, of the under bump metallurgic (UBM) layer.

[0324] Next, referring to FIG. **52**, the solder layer **29** is reflowed to form multiple solid solder bumps or balls **29***a* on the metal layer **28**, preferably the previously described electroplated or electroless plated nickel layer **28**, of the under bump metallurgic (UBM) layer, and then a singulation process can be performed to cut the substrate **110**, the filling or encapsulating layers **85**, **86** and **87** and the thermal spreading plane **8** and to singularize a plurality of the system-in package or multichip module shown in FIG. **52**. The system-in package or multichip module can be connected to a mother board, a printed circuit board, a metal substrate, a glass substrate or a ceramic substrate using the solder bumps or balls **29***a*.

[0325] The solder bumps or balls **29***a* have a desired bump height, e.g., greater than 5 micrometers, such as between 5 and 400 micrometers, and preferably between 10 and 100 micrometers, and a suitable width or diameter, e.g., between 20 and 400 micrometers, and preferably between 50 and 100 micrometers. The solder bumps or balls **29***a* can be bismuth-containing bumps or balls, indium-containing bumps or balls, or tin-containing bumps or balls of a tin-lead alloy, a tin-silver alloy, a tin-silver-copper alloy or a tin-gold alloy. Alternatively, the solder bumps or balls **29***a* can be formed by processes including a screen-printing process and a reflow process or including a ball-mounting process and a reflow process.

[0326] The solder bumps or balls **29***a* can be connected to the patterned metal layer **1** through, in sequence, the under bump metallurgic (UBM) layer, the patterned metal layer **9** and the through-hole connections **17**.

[0327] One of the solder bumps or balls **29***a* can be connected to one or more metal traces or pads **26** of one of the chips **120** through, in sequence, the under bump metallurgic (UBM) layer, the patterned metal layer **9**, one of the through-hole connections **17**, the patterned metal layer **1**, one of the metal pillars or bumps **14**, the patterned metal layer **3**, one or more metal pillars or bumps **24**, and the patterned metal layer **2**.

[0328] Another one of the solder bumps or balls **29***a* can be connected to one or more metal traces or pads **46** of one of the chips **130** through, in sequence, the under bump metallurgic (UBM) layer, the patterned metal layer **9**, one of the through-hole connections **17**, the patterned metal layer **1**, one of the metal pillars or bumps **14**, the patterned metal layer **3**, one of the metal pillars or bumps **34**, the patterned metal layer **5**, one or more metal pillars or bumps **44**, and the patterned metal layer **4**.

[0329] Another one of the solder bumps or balls **29***a* can be connected to one or more metal traces or pads **66** of one of the chips **140** through, in sequence, the under bump metallurgic (UBM) layer, the patterned metal layer **9**, one of the through-hole connections **17**, the patterned metal layer **1**, one of the metal pillars or bumps **14**, the patterned metal layer **3**, one of the metal pillars or bumps **34**, the patterned metal layer **5**, one of the metal pillars or bumps **54**, the patterned metal layer **7**, one or more metal pillars or bumps **64**, and the patterned metal layer **6**.

[0330] Alternatively, another kind of metal bumps can be formed on the contact points, exposed by the openings **99***a*, of the metal layer **9***c* illustrated in FIG. **48**, which can be referred to as the following steps as illustrated in FIGS. **53** and **54**.

[0331] FIGS. **53** and **54** show a process for forming another system-in package or multichip module according to another embodiment of the present disclosure. Referring to FIG. **53**, with the step being illustrated with a reverse figure for simple explanation, after the step illustrated in FIG. **49**, a metal layer **36** having a thickness, e.g., greater than 10 micrometers, such as between 10 and 100 micrometers, and preferably between 20 and 60 micrometers, can be formed on the seed layer **19** exposed by the cylinder-shaped openings **89***a* and in the cylinder-shaped openings **89***a* by using an electroplating process or by using an electroplating process and an electroless plating process. Next, a barrier layer **37**, a metal layer, having a thickness, e.g., between 0.2 and 10 micrometers, and preferably between 1 and 5 micrometers, can be formed in the cylinder-shaped openings **89***a* and on the metal layer **36** in the cylinder-shaped openings **89***a* by using an electroplating process or an electroless plating process. Finally, a solder wetting layer **38**, a metal layer, having a thickness, e.g., between 0.02 and 5 micrometers, and preferably between 0.1 and 1 micrometers, can be formed in the cylinder-shaped openings **89***a* and on the barrier layer **37** in the cylinder-shaped openings **89***a* by using an electroplating process or an electroless plating process.

[0332] The metal layer **36** may include copper, silver, gold or nickel. For example, the metal layer **36** can be a single metal layer formed by electroplating a copper layer or a nickel layer, to a thickness, e.g., greater than 10 micrometers, such as between 10 and 100 micrometers, and preferably between 20 and 60 micrometers, in the cylinder-shaped openings **89***a* and on the seed layer **19**, preferably the previously described copper seed layer **19**, exposed by the cylinder-shaped openings **89***a*. Alternatively, the metal layer **36** can be a single metal layer formed by electroplating a silver layer, to a thickness, e.g., greater than 10 micrometers, such as between 10 and 100 micrometers, and preferably between 20 and 60 micrometers, in the cylinder-shaped openings **89***a* and on the seed layer **19**, preferably the previously described silver seed layer **19**, exposed by the cylinder-shaped openings **89***a*. Alter-

natively, the metal layer **36** can be a single metal layer formed by electroplating a gold layer, to a thickness, e.g., greater than 10 micrometers, such as between 10 and 100 micrometers, and preferably between 20 and 60 micrometers, in the cylinder-shaped openings **89***a* and on the seed layer **19**, preferably the previously described gold seed layer **19**, exposed by the cylinder-shaped openings **89***a*.

[0333] The barrier layer **37** may include nickel or nickel vanadium. For example, the barrier layer **37** can be a single metal layer formed by electroplating or electroless plating a nickel or nickel-vanadium layer, to a thickness, e.g., between 0.2 and 10 micrometers, and preferably 1 and 5 micrometers, in the cylinder-shaped openings **89***a* and on the metal layer **36**, preferably the previously described electroplated copper layer **36**, in the cylinder-shaped openings **89***a*.

[0334] The solder wetting layer **38** may include gold, silver, copper, solder, bismuth, indium, a tin-lead alloy, a tin-silver alloy, a tin-silver-copper alloy or a tin-gold alloy. For example, the solder wetting layer **38** can be a single metal layer formed by electroplating or electroless plating a gold layer, a bismuth-containing layer, an indium-containing layer or a tin-containing layer of a tin-lead alloy, a tin-silver alloy, a tin-silver-copper alloy or a tin-gold alloy, to a thickness, e.g., between 0.02 and 5 micrometers, and preferably between 0.1 and 1 micrometers, in the cylinder-shaped openings **89***a* and on the barrier layer **37**, preferably the previously described electroplated or electroless plated nickel layer **37**, in the cylinder-shaped openings **89***a*.

[0335] Referring to FIG. **54**, with the step being illustrated with a reverse figure for simple explanation, after forming the solder wetting layer **38** illustrated in FIG. **53**, the photoresist layer **89** is removed using a chemical solution containing amine or $NaCO_3$, next the seed layer **19** not under the metal layer **36** is removed by using a wet chemical etching process or a reactive ion etching (RIE) process, and then the adhesion layer **18** not under the metal layer **36** is removed by using a wet chemical etching process or a reactive ion etching (RIE) process.

[0336] Accordingly, the adhesion layer **18**, the seed layer **19**, the metal layer **36**, the barrier layer **37** and the solder wetting layer **38** compose multiple metal pillars or bumps **39** formed on the contact points of the metal layer **9***c* exposed by the openings **99***a* and on the polymer layer **99**. Each of the metal pillars or bumps **39** may have a suitable width, e.g., between 20 and 400 micrometers, and preferably between 50 and 100 micrometers, and a bump height greater than 10 micrometers, such as between 10 and 115 micrometers, and preferably between 20 and 65 micrometers.

[0337] Alternatively, the barrier layer **37** can be omitted from the metal pillars or bumps **39**, that is, the metal pillars or bumps **39** can be composed of the adhesion layer **18** on the contact points, exposed by the openings **99***a*, of the metal layer **9***c* and on the polymer layer **99**, the seed layer **19** on the adhesion layer **18**, the metal layer **36** on the seed layer **19**, and the solder wetting layer **38** on the metal layer **36**. For example, when the metal layer **36** is a nickel-containing layer, such as a single layer of nickel or nickel vanadium, with a thickness, e.g., greater than 10 micrometers, such as between 10 and 100 micrometers, and preferably between 20 and 60 micrometers, formed on the seed layer **19**, preferably the previously described copper seed layer **19**, by an electroplating process, the solder wetting layer **38** can be a gold layer, a bismuth-containing layer, an indium-containing layer or a tin-containing layer with a thickness, e.g., between 0.02 and 5 micrometers, and preferably between 0.1 and 1 micrometers, formed on the electroplated nickel-containing layer **36** by an electroplating process or an electroless plating process.

[0338] After forming the metal pillars or bumps **39**, a singulation process can be performed to cut the substrate **110**, the filling or encapsulating layers **85**, **86** and **87** and the thermal spreading plane **8** and to singularize a plurality of the system-in package or multichip module shown in FIG. **54**. The system-in package or multichip module can be connected to a mother board, a printed circuit board, a metal substrate, a glass substrate or a ceramic substrate using the metal pillars or bumps **39**.

[0339] FIG. **104** shows another system-in package or multichip module according to another embodiment of the present disclosure. When the substrate **110** is a ball-grid-array (BGA) substrate or a print circuit board (PCB), multiple solder bumps or balls **845** can be formed on a bottom surface of the substrate **110** after the previously described steps illustrated in FIGS. **1-39**, and then a singulation process can be performed to cut the substrate **110**, the filling or encapsulating layers **85**, **86** and **87** and the thermal spreading plane **8** and to singularize a plurality of the system-in package or multichip module shown in FIG. **104**. The patterned metal layer **1** of the system-in package or multichip module shown in FIG. **104** can be connected to the solder bumps or balls **845** through multiple metal layers in the substrate **110**. The system-in package or multichip module shown in FIG. **104** can be connected to a mother board, a printed circuit board, a metal substrate, a glass substrate or a ceramic substrate using the solder bumps or balls **845**. The solder bumps or balls **845** have a bump height greater than 5 micrometers, such as between 5 and 400 micrometers, and preferably between 10 and 100 micrometers, and a suitable width or diameter, e.g., between 20 and 400 micrometers, and preferably between 50 and 100 micrometers. The solder bumps or balls **845** may include, for example, bismuth, indium, a tin-lead alloy, a tin-silver alloy, a tin-silver-copper alloy, and/or a tin-gold alloy.

[0340] FIG. **55** demonstrates another system-in package or multichip module according to another embodiment of the present disclosure. In this embodiment, one of the chips **140** in the system-in package or multichip module illustrated in FIG. **52** can be replaced by a passive component **67**, such as capacitor, inductor or resistor. The element in FIG. **55** indicated by a same reference number as indicates the element in FIGS. **1-52** has a same material and spec as the element illustrated in FIGS. **1-52**. The passive component **67** can be connected to the metal layer **53** of the patterned metal layer **5** through two solder joints **68**. The solder joints **68** may include bismuth, indium, tin-lead alloy, tin-silver alloy, tin-silver-copper alloy or tin-gold.

[0341] The passive component **67** may have first and second terminals. The first terminal of the passive component **67** can be connected to one or more metal traces or pads **46** of one or more chips **130** through, in sequence, one of the solder joints **68**, the patterned metal layer **5**, one or more metal pillars or bumps **44** and the patterned metal layer **4**. The second terminal of the passive component **67** can be connected to one or more metal traces or pads **26** of one or more chips **120** through, in sequence, the other one of the solder joints **68**, the patterned metal layer **5**, one or more metal pillars or bumps **34**, the patterned metal layer **3**, one or more metal pillars or bumps **24**, and the patterned metal layer **2**. Alternatively, the second terminal of the passive component **67** can be connected to one or more solder bumps or balls **29***a*

through, in sequence, the other one of the solder joints **68**, the patterned metal layer **5**, one or more metal pillars or bumps **34**, the patterned metal layer **3**, one or more metal pillars or bumps **14**, the patterned metal layer **1**, one or more through-hole connections **17**, the patterned metal layer **9**, and the under bump metallurgic (UBM) layer composed of the adhesion layer **18**, the seed layer **19** and the metal layers **27** and **28**.

[0342] Furthermore, the first terminal of the passive component **67** can be connected to a first signal interconnect or trace, provided by the patterned metal layer **5**, through one of the solder joints **68**, and the second terminal of the passive component **67** can be connected a second signal interconnect or trace, provided by the patterned metal layer **5**, through the other one of the solder joints **68**. Alternatively, the first terminal of the passive component **67** can be connected to a signal interconnect or trace, provided by the patterned metal layer **5**, through one of the solder joints **68**, and the second terminal of the passive component **67** can be connected a ground interconnect or trace, provided by the patterned metal layer **5**, through the other one of the solder joints **68**. Alternatively, the first terminal of the passive component **67** can be connected to a power interconnect or trace, provided by the patterned metal layer **5**, through one of the solder joints **68**, and the second terminal of the passive component **67** can be connected a ground interconnect or trace, provided by the patterned metal layer **5**, through the other one of the solder joints **68**.

[0343] The system-in package or multichip module illustrated in FIG. **55** can be formed by the following steps. First, the passive component **67** is mounted onto the metal layer **53** of the patterned metal layer **5** using the solder joints **68** after the step illustrated in FIG. **30**. Next, the filling or encapsulating layer **87** is formed on the top surface **86***a* of the filling or encapsulating layer **86**, on the metal layer **53** of the patterned metal layer **5**, on the chips **140**, on the passive component **67**, on the metal layer **63** of the patterned metal layer **6** and on tops of the metal pillars or bumps **54** and **64** by using a molding process, a spin coating process, a lamination process or a printing process. Next, the steps illustrated in FIGS. **32-52** can be performed to form the system-in package or multichip module illustrated in FIG. **55**. The system-in package or multichip module illustrated in FIG. **55** can be connected to a mother board, a printed circuit board, a metal substrate, a glass substrate or a ceramic substrate using the solder bumps or balls **29***a*.

[0344] FIG. **56** is a schematically top perspective view of the patterned metal layer **7** illustrated in FIG. **55**. Circles **64** enclosing oblique lines indicate the metal pillars or bumps **64** preformed on the patterned metal layer **6**, shown in FIG. **55**, before the chips **140** are cut from a semiconductor wafer. Circles **54** enclosing no oblique lines indicate the metal pillars or bumps **54** preformed on the patterned metal layer **5**, shown in FIG. **55**, before the chips **140** and the passive component **67** are mounted on the patterned metal layer **5**.

[0345] FIGS. **57-67** show a process for forming another system-in package or multichip module according to another embodiment of the present disclosure. Referring to FIG. **57**, after the steps illustrated in FIGS. **1-24** are performed, the photoresist layer **94** is removed by using a chemical solution containing amine or $NaCO_3$. Next, the seed layer **52** not under the metal layer **53** is removed by using a wet chemical etching process or a reactive ion etching (RIE) process. Next, the adhesion layer **51** not under the metal layer **53** is removed by using a wet chemical etching process or a reactive ion etching (RIE) process. Accordingly, the adhesion layer **51**, the seed layer **52** and the metal layer **53** compose a patterned metal layer **5** formed on the top surface **86***a* of the filling or encapsulating layer **86**, on the top surfaces **44***a* of the metal pillars or bumps **44** and on the top surfaces **34***a* of the metal pillars or bumps **34**. A coverage ratio of an area of the patterned metal layer **5** covering a ground or polished surface including the top surfaces **34***a*, **44***a* and **86***a* to an area of the ground or polished surface ranges from 50% to 95%, and preferably ranges from 60% to 90%. The patterned metal layer **5** may include a metal interconnect or trace, such as signal trace, clock bus, clock trace, power plane, power bus, power trace, ground plane, ground bus or ground trace, connecting multiple of the metal pillars or bumps **34**, connecting multiple of the metal pillars or bumps **44**, or connecting one or more of the metal pillars or bumps **34** to one or more of the metal pillars or bumps **44**. Each of the chips **130** may have one of the metal traces or pads **46** connected to multiple of the metal traces or pads **26** in one or more of the chips **120** through, in sequence, the patterned metal layer **4**, one of the metal pillars or bumps **44**, the patterned metal layer **5**, one or more of the metal pillars or bumps **34**, the patterned metal layer **3**, multiple of the metal pillars or bumps **24**, and the patterned metal layer **2**.

[0346] Referring to FIG. **58**, after the step illustrated in FIG. **57**, a polymer layer **415** is formed on the metal layer **53** of the patterned metal layer **5** and on the top surface **86***a* of the filling or encapsulating layer **86**, and multiple openings **415***a* in the polymer layer **415** are over multiple contact points of the metal layer **53** and expose them. The polymer layer **415** may have a thickness, e.g., between 1 and 20 micrometers, and preferably between 2 and 15 micrometers or between 5 and 10 micrometers, and can be a polyimide layer, a polybenzoxazole (PBO) layer, a benzocyclobutane (BCB) layer, an epoxy layer, a poly-phenylene oxide (PPO) layer, a silosane layer or a SU-8 layer.

[0347] Next, referring to FIG. **59**, an adhesion layer **5***b* having a thickness, e.g., less than 1 micrometer, such as between 1 nanometer and 0.5 micrometers, can be formed on the contact points, exposed by the openings **415***a*, of the metal layer **53** and on the polymer layer **415** by using a physical-vapor deposition (PVD) process, such as sputtering process or evaporation process. Next, a seed layer **5***c* having a thickness, e.g., less than 1 micrometer, such as between 10 nanometers and 0.8 micrometers, can be formed on the adhesion layer **5***b* by using a physical-vapor deposition (PVD) process, such as sputtering process or evaporation process, or an electroless plating process. Next, a photoresist layer **101** can be formed on the seed layer **5***c* by using a spin-on coating process or a lamination process. Next, the photoresist layer **101** is patterned with processes of lithographic, light exposure and development to form multiple openings **101***a* in the photoresist layer **101** exposing the seed layer **5***c*.

[0348] The material of the adhesion layer **5***b* may include titanium, a titanium-tungsten alloy, titanium nitride, chromium, tantalum, tantalum nitride, nickel or nickel vanadium. The material of the seed layer **5***c* may include copper, silver, gold or titanium-copper alloy.

[0349] For example, when the adhesion layer **5***b* is formed by sputtering a titanium-containing layer, such as a single layer of titanium-tungsten alloy, titanium or titanium nitride, having a thickness, e.g., less than 1 micrometer, such as between 1 nanometer and 0.5 micrometers, on the contact points, exposed by the openings **415***a*, of the metal layer **53**

and on the polymer layer **415**, the seed layer **5***c* can be formed by sputtering a copper layer, a silver layer, a titanium-copper-alloy layer or a gold layer with a thickness, e.g., less than 1 micrometer, such as between 10 nanometers and 0.8 micrometers, on the titanium-containing layer.

[0350] Alternatively, when the adhesion layer **5***b* is formed by sputtering a tantalum-containing layer, such as a single layer of tantalum or tantalum nitride, having a thickness, e.g., less than 1 micrometer, such as between 1 nanometer and 0.5 micrometers, on the contact points, exposed by the openings **415***a*, of the metal layer **53** and on the polymer layer **415**, the seed layer **5***c* can be formed by sputtering a copper layer, a silver layer, a titanium-copper-alloy layer or a gold layer with a thickness, e.g., less than 1 micrometer, such as between 10 nanometers and 0.8 micrometers, on the tantalum-containing layer.

[0351] Alternatively, when the adhesion layer **5***b* is formed by sputtering a chromium-containing layer, such as a single layer of chromium, having a thickness, e.g., less than 1 micrometer, such as between 1 nanometer and 0.5 micrometers, on the contact points, exposed by the openings **415***a*, of the metal layer **53** and on the polymer layer **415**, the seed layer **5***c* can be formed by sputtering a copper layer, a silver layer, a titanium-copper-alloy layer or a gold layer with a thickness, e.g., less than 1 micrometer, such as between 10 nanometers and 0.8 micrometers, on the chromium-containing layer.

[0352] Alternatively, when the adhesion layer **5***b* is formed by sputtering a nickel-containing layer, such as a single layer of nickel or nickel vanadium, having a thickness, e.g., less than 1 micrometer, such as between 1 nanometer and 0.5 micrometers, on the contact points, exposed by the openings **415***a*, of the metal layer **53** and on the polymer layer **415**, the seed layer **5***c* can be formed by sputtering a copper layer, a silver layer, a titanium-copper-alloy layer or a gold layer with a thickness, e.g., less than 1 micrometer, such as between 10 nanometers and 0.8 micrometers, on the nickel-containing layer.

[0353] Referring to FIG. **60**, after the step illustrated in FIG. **59**, a metal layer **5***d*, a conductive layer, having a thickness, e.g., greater than 1 micrometer, such as between 2 and 30 micrometers, and preferably between 3 and 10 micrometers, can be formed on the seed layer **5***c* exposed by the openings **101***a* and in the openings **101***a* by using a process including an electroplating process. The metal layer **5***d* can be a single layer of copper, silver, gold, palladium, platinum, rhodium, ruthenium, rhenium or nickel, or a composite layer made of the previously described metals.

[0354] For example, the metal layer **5***d* can be a single metal layer formed by electroplating a copper layer, to a thickness, e.g., greater than 1 micrometer, such as between 2 and 30 micrometers, and preferably between 3 and 10 micrometers, in the openings **101***a* and on the seed layer **5***c*, preferably the previously described copper or titanium-copper-alloy seed layer **5***c*, exposed by the openings **101***a*.

[0355] Alternatively, the metal layer **5***d* can be a single metal layer formed by electroplating a gold layer, to a thickness, e.g., greater than 1 micrometer, such as between 2 and 30 micrometers, and preferably between 3 and 10 micrometers, in the openings **101***a* and on the seed layer **5***c*, preferably the previously described gold seed layer **5***c*, exposed by the openings **101***a*.

[0356] Next, referring to FIG. **61**, a photoresist layer **95** can be formed on the photoresist layer **101** and on the metal layer **5***d*, and multiple cylindrical openings **95***a* in the photoresist layer **95** are over multiple contact points of the metal layer **5***d* and expose them. Next, multiple metal pillars or bumps **54** having a thickness, e.g., or height greater than 15 micrometers, such as between 15 and 520 micrometers, and preferably between 20 and 110 micrometers, are formed in the cylindrical openings **95***a* and on the contact points, exposed by the cylindrical openings **95***a*, of the metal layer **5***d* by using a process including an electroplating process, which can be referred to as the step illustrated in FIG. **26**. The specification of the metal pillars or bumps **54** shown in FIG. **61** can be referred to as the specification of the metal pillars or bumps **54** as illustrated in FIG. **26**.

[0357] Referring to FIG. **62**, after forming the metal pillars or bumps **54** illustrated in FIG. **61**, the photoresist layers **95** and **101** are removed using a chemical solution containing amine or $NaCO_3$. Next, the seed layer **5***c* not under the metal layer **5***d* is removed by using a wet chemical etching process or a reactive ion etching (RIE) process. Next, the adhesion layer **5***b* not under the metal layer **5***d* is removed by using a wet chemical etching process or a reactive ion etching (RIE) process.

[0358] Accordingly, the adhesion layer **5***b*, the seed layer **5***c* and the metal layer **5***d* compose a patterned metal layer **5***a* formed on the contact points, exposed by the openings **415***a*, of the metal layer **53** and on the polymer layer **415**, and the metal pillars or bumps **54** are formed on the metal layer **5***d* of the patterned metal layer **5***a*. The pitch between neighboring or adjacent pairs of metal pillars or bumps **54** can be, for example, greater than 100 micrometers, such as between 100 and 250 micrometers, or less than 100 micrometers, such as between 5 and 50 micrometers or between 50 and 100 micrometers. Each of the metal pillars or bumps **54** may have a suitable width or diameter, e.g., greater than 5 micrometers, such as between 5 and 300 micrometers, and preferably between 5 and 50 micrometers. The patterned metal layer **5***a* may include a metal interconnect or trace, such as signal trace, clock bus, clock trace, power plane, power bus, power trace, ground plane, ground bus or ground trace, connecting one or more of the metal pillars or bumps **54** to the patterned metal layer **5**. The metal pillars or bumps **54** can be connected to the metal pillars or bumps **34** and **44** through the patterned metal layers **5** and **5***a*.

[0359] Alternatively, another process for forming the metal pillars or bumps **54** on the metal layer **5***d* can be performed by the following steps. First, the photoresist layer **101** is removed using a chemical solution containing amine or $NaCO_3$ after forming the metal layer **5***d* illustrated in FIG. **60**. Next, the photoresist layer **95** illustrated in FIG. **61** can be formed on the metal layer **5***d* and on the seed layer **5***c* by a spin-on coating process or a lamination process. Next, the photoresist layer **95** is patterned with the processes of lithographic, light exposure and development to form the cylindrical openings **95***a* in the photoresist layer **95** exposing the contact points of the metal layer **5***d*. Next, the metal pillars or bumps **54** are formed in the cylindrical openings **95***a* and on the contact points, exposed by the cylindrical openings **95***a*, of the metal layer **5***d* using a process including an electroplating process, which can be referred to as the step illustrated in FIG. **26**. Next, the photoresist layer **95** is removed using a chemical solution containing amine or $NaCO_3$. Accordingly, the metal pillars or bumps **54** can be formed on the metal layer **5***d* after the photoresist layer **95** is removed.

[0360] Next, referring to FIG. **63**, the chips **140** illustrated in FIGS. **29** and **30** are attached to the metal layer **5***d* of the

patterned metal layer **5***a* by using the previously described glue material **82**, next the previously described filling or encapsulating layer **87** is formed on the polymer layer **415**, on the metal layer **5***d* of the patterned metal layer **5***a*, on the chips **140**, on the metal layer **63** of the patterned metal layer **6** and on tops of the metal pillars or bumps **54** and **64** by using a molding process, a spin coating process, a lamination process or a printing process, and then the filling or encapsulating layer **87** is ground or polished by a grinding or polishing process, such as mechanical grinding process, mechanical polishing process or chemical mechanical polishing (CMP) process.

[0361] Alternatively, after the step illustrated in FIG. **62**, a polymer layer, such as polyimide layer with a thickness, e.g., between 2 and 30 micrometers, may be formed on the metal layer **5***d* of the patterned metal layer **5***a* and on the polymer layer **415**, next the chips **140** can be attached to the polymer layer by using the glue material **82**, next the filling or encapsulating layer **87** can be formed on the polymer layer, on the chips **140**, on the metal layer **63** of the patterned metal layer **6** and on tops of the metal pillars or bumps **54** and **64**, and then the filling or encapsulating layer **87** is ground or polished by the grinding or polishing process. In this case, the glue material **82** is on the polymer layer, and the chips **140** are on the glue material **82**.

[0362] After the grinding or polishing process, top surfaces **54***a* of the metal pillars or bumps **54** and top surfaces **64***a* of the metal pillars or bumps **64** are exposed and are not covered by the filling or encapsulating layer **87**, and the top surfaces **64***a* of the metal pillars or bumps **64** are substantially coplanar with the top surfaces **54***a* of the metal pillars or bumps **54** and with a top surface **87***a* of the filling or encapsulating layer **87**,

[0363] After the grinding or polishing process, each of the metal pillars or bumps **64** has a thickness, e.g., or height greater than 5 micrometers, such as between 5 and 50 micrometers, and preferably between 10 and 20 micrometers, and each of the metal pillars or bumps **54** has a thickness, e.g., or height greater than 15 micrometers, such as between 15 and 520 micrometers, and preferably between 20 and 110 micrometers, and greater than that of each of the metal pillars or bumps **64**. The specification of the metal pillars or bumps **54**, after the grinding or polishing process, shown in FIG. **63** can be referred to as the specification of the metal pillars or bumps **54**, after the grinding or polishing process, as illustrated in FIG. **32**. The specification of the metal pillars or bumps **64**, after the grinding or polishing process, shown in FIG. **63** can be referred to as the specification of the metal pillars or bumps **64**, after the grinding or polishing process, as illustrated in FIG. **32**.

[0364] Referring to FIG. **64**, after the grinding or polishing process illustrated in FIG. **63**, the steps illustrated in FIGS. **33-36** can be performed to provide the previously described patterned metal layer **7** which is formed on the top surface **87***a* of the filling or encapsulating layer **87**, on the top surfaces **54***a* of the metal pillars or bumps **54** and on the top surfaces **64***a* of the metal pillars or bumps **64**. Next, a polymer layer **98** is formed on the metal layer **73** of the patterned metal layer **7** and on the top surface **87***a* of the filling or encapsulating layer **87**, and multiple openings **98***a* in the polymer layer **98** are over multiple contact points of the metal layer **73** and expose them. Next, multiple discrete (preformed) passive components **910**, such as capacitors, inductors or resistors, are mounted onto some of the contact points, exposed by some of the openings **98***a*, of the metal layer **73** through multiple solder joints **915** including bismuth, indium, tin-lead alloy, tin-silver alloy, tin-silver-copper alloy or tin-gold.

[0365] Each of the discrete passive components **910**, for example, may have a first terminal connected to one of the metal traces or pads **66** in one of the chips **140** through, in sequence, one of the solder joints **915**, a first signal interconnect or trace provided by the patterned metal layer **7**, one of the metal pillars or bumps **64** and the patterned metal layer **6**, and a second terminal connected to another one of the metal traces or pads **66** in another one of the chips **140** through, in sequence, another one of the solder joints **915**, a second signal interconnect or trace provided by the patterned metal layer **7**, another one of the metal pillars or bumps **64** and the patterned metal layer **6**.

[0366] Alternatively, each of the discrete passive components **910** may have a first terminal connected to one of the metal traces or pads **66** in one of the chips **140** through, in sequence, one of the solder joints **915**, a signal interconnect or trace provided by the patterned metal layer **7**, one of the metal pillars or bumps **64** and the patterned metal layer **6**, and a second terminal connected to another one of the metal traces or pads **66** in another one of the chips **140** through, in sequence, another one of the solder joints **915**, a ground interconnect or trace provided by the patterned metal layer **7**, another one of the metal pillars or bumps **64** and the patterned metal layer **6**.

[0367] Alternatively, each of the discrete passive components **910** may have a first terminal connected to one of the metal traces or pads **66** in one of the chips **140** through, in sequence, one of the solder joints **915**, a power interconnect or trace provided by the patterned metal layer **7**, one of the metal pillars or bumps **64** and the patterned metal layer **6**, and a second terminal connected to another one of the metal traces or pads **66** in another one of the chips **140** through, in sequence, another one of the solder joints **915**, a ground interconnect or trace provided by the patterned metal layer **7**, another one of the metal pillars or bumps **64** and the patterned metal layer **6**.

[0368] Referring to FIG. **65**, after the step illustrated in FIG. **64**, a polymer layer **78** having a thickness, e.g., between 5 and 50 micrometers, and preferably between 5 and 15 micrometers or between 5 and 10 micrometers, can be formed on the polymer layer **78** and on the discrete passive components **910**, and multiple openings **78***a* in the polymer layer **78** are over the other of the contact points, exposed by the other of the openings **98***a* and not bonded with any passive component by solder joints, of the metal layer **73** and expose them. The polymer layer **78** may include benzocyclobutane (BCB), epoxy, polyimide, polybenzoxazole (PBO), polyphenylene oxide (PPO), silosane or SU-8.

[0369] Next, referring to FIG. **66**, the steps illustrated in FIG. **39** can be performed to provide the previously described metal layer **8** which is formed on the polymer layer **78** and on the contact points, exposed by the openings **78***a*, of the metal layer **73**. The metal layer **8** illustrated in FIG. **66** is composed of the previously described adhesion layer **8***a* on the polymer layer **78** and on the contact points, exposed by the openings **78***a*, of the metal layer **73**, the previously described seed layer **8***b* on the adhesion layer **8***a*, the previously described metal layer **8***c* on the seed layer **8***b*, and the previously described metal layer **8***d* on the metal layer **8***c*. After forming the metal layer **8**, the steps illustrated in FIGS. **40-52** can be performed to provide a system-in package or multichip module, and the system-in package or multichip module can be connected to a

mother board, a printed circuit board, a metal substrate, a glass substrate or a ceramic substrate using the solder bumps or balls **29***a*.

[0370] Alternatively, referring to FIG. **67**, after forming the metal layer **8**, the steps illustrated in FIGS. **40-49**, **53** and **54** can be performed to provide a system-in package or multichip module, and the system-in package or multichip module can be connected to a mother board, a printed circuit board, a metal substrate, a glass substrate or a ceramic substrate using the metal pillars or bumps **39**.

[0371] Regarding the system-in package or multichip module illustrated in FIG. **66** or **67**, a top perspective view of the patterned metal layer **7** can be referred to FIG. **37**, and the patterned metal layer **7** may include the clock interconnect, bus or trace **7***c*, the ground plane, bus or trace **7***g*, the power planes, buses or traces **7***p* and the signal interconnects, traces or lines **7***s*, as shown in FIG. **37**.

[0372] The metal layer **8** of the system-in package or multichip module shown in FIG. **66** or **67** can be connected to one or more of the power planes, buses or traces **7***p*, shown in FIG. **37**, through one or more of the openings **78** in the polymer layer **78**, or to the ground plane, bus or trace **7***g*, shown in FIG. **37**, through one or more of the openings **78** in the polymer layer **78**. Each of the chips **140** of the system-in package or multichip module shown in FIG. **66** or **67** may have one of the metal traces or pads **66** connected to the metal layer **8** through, in sequence, the patterned metal layer **6**, one of the metal pillars or bumps **64**, and the patterned metal layer **7** such as the power plane, bus or trace **7***p* or the ground plane, bus or trace **7***g*.

[0373] Regarding the system-in package or multichip module shown in FIG. **66** or **67**, all of the passive components **910** and all of the chips **120**, **130** and **140** are surrounded by a power system for providing a power voltage and a ground system for providing a ground voltage. The power system can be provided by the patterned metal layer **1** under the chips **120** and the leftmost metal pillars or bumps **14**, **34** and **54**, and the ground system can be provided by the rightmost metal pillars or bumps **14**, **34** and **54** and the metal layer **8** serving as thermal spreading plane. Alternatively, the ground system can be provided by the patterned metal layer **1** under the chips **120** and the leftmost metal pillars or bumps **14**, **34** and **54**, and the power system can be provided by the rightmost metal pillars or bumps **14**, **34** and **54** and the metal layer **8** serving as thermal spreading plane.

[0374] A coverage ratio of the entire area of the patterned metal layer **7** covering a ground or polished surface including the top surfaces **54***a*, **64***a* and **87***a* of the system-in package or multichip module illustrated in FIG. **66** or **67** to the entire area of the ground or polished surface ranges from 50% to 95%, and preferably ranges from 60% to 90%.

[0375] FIGS. **68-73** show a process for forming another system-in package or multichip module according to another embodiment of the present disclosure. Referring to FIG. **68**, after the steps illustrated in FIGS. **1-34** are performed, a barrier/wetting layer **74** having a thickness, e.g., between 0.2 and 10 micrometers, and preferably between 1 and 5 micrometers, can be formed in the openings **96***a* and on the metal layer **73** in the openings **96***a* by using an electroplating or electroless plating process. The barrier/wetting layer **74** can be a single layer of nickel, gold, silver, tin, palladium, platinum, rhodium, ruthenium or rhenium, or a composite layer made of the previously described metals.

[0376] For example, the barrier/wetting layer **74** can be a single metal layer formed by electroplating or electroless plating a nickel layer, to a thickness, e.g., between 0.2 and 10 micrometers, and preferably between 1 and 5 micrometers, in the openings **96***a* and on the metal layer **73**, preferably the previously described copper layer **73**, in the openings **96***a*.

[0377] Alternatively, the barrier/wetting layer **74** can be composed of double metal layers formed by electroplating or electroless plating a nickel layer in the openings **96***a* and on the metal layer **73**, preferably the previously described copper layer **73**, in the openings **96***a*, and then electroplating or electroless plating a gold layer, a palladium layer, a tin layer or a silver layer in the openings **96***a* and on the electroplated or electroless plated nickel layer in the openings **96***a*.

[0378] Referring to FIG. **69**, after forming the barrier/wetting layer **74**, the photoresist layer **96** is removed using a chemical solution containing amine or $NaCO_3$. Next, the seed layer **72** not under the metal layer **73** is removed by using a wet chemical etching process or a reactive ion etching (RIE) process. Next, the adhesion layer **71** not under the metal layer **73** is removed by using a wet chemical etching process or a reactive ion etching (RIE) process.

[0379] Accordingly, the adhesion layer **71**, the seed layer **72**, the metal layer **73** and the barrier/wetting layer **74** compose a patterned metal layer **7** formed on the top surface **87***a* of the filling or encapsulating layer **87**, on the top surfaces **54***a* of the metal pillars or bumps **54** and on the top surfaces **64***a* of the metal pillars or bumps **64**. The patterned metal layer **7** illustrated in FIG. **69** may include a metal plane, bus or trace, such as signal trace, clock bus, clock trace, power plane, power bus, power trace, ground plane, ground bus or ground trace, connecting one or more metal pillars or bumps **54**, connecting one or more metal pillars or bumps **64** or connecting one or more metal pillars or bumps **54** to one or more metal pillars or bumps **64**.

[0380] Referring to FIG. **70**, after the step illustrated in FIG. **69**, a polymer layer **98** having a thickness, e.g., between 1 and 20 micrometers, and preferably between 2 and 15 micrometers or between 5 and 10 micrometers, can be formed on the barrier/wetting layer **74** of the patterned metal layer **7** and on the top surface **87***a* of the filling or encapsulating layer **87**, and multiple openings **98***a* in the polymer layer **98** are over multiple contact points of the barrier/wetting layer **74** and expose them. The polymer layer **98** can be a polyimide layer, a polybenzoxazole (PBO) layer, a benzocyclobutane (BCB) layer, an epoxy layer, a poly-phenylene oxide (PPO) layer, a silosane layer or a SU-8 layer.

[0381] Next, referring to FIG. **71**, a chip **160** can be mounted onto the contact points, exposed by the openings **98***a*, of the barrier/wetting layer **74** by bonding multiple metal pillars or bumps **710** of the chip **160** with multiple solder joints **720** which are formed on the contact points, exposed by the openings **98***a*, of the barrier/wetting layer **74**. Next, an underfill **730**, such as epoxy, polyimide, benzocyclobutane (BCB), polybenzoxazole (PBO), poly-phenylene oxide (PPO), silosane or SU-8, can be filled into a gap between the chip **160** and the polymer layer **98**, enclosing the metal pillars or bumps **710**.

[0382] The chip **160** can be a central-processing-unit (CPU) chip designed by x86 architecture, a central-processing-unit (CPU) chip designed by non x86 architectures, such as ARM, Strong ARM or MIPs, a baseband chip, a graphics-processing-unit (GPU) chip, a digital-signal-processing (DSP) chip, a wireless local area network (WLAN) chip, a

memory chip, such as flash memory chip, dynamic-random-access-memory (DRAM) chip or statistic-random-access-memory (SRAM) chip, a logic chip, an analog chip, a power device, a regulator, a power management device, a global-positioning-system (GPS) chip, a Bluetooth chip, a system-on chip (SOC) including a graphics-processing-unit (GPU) circuit block, a wireless local area network (WLAN) circuit block and a central-processing-unit (CPU) circuit block designed by x86 architecture or by non x86 architectures, but not including any baseband circuit block, a system-on chip (SOC) including a baseband circuit block, a wireless local area network (WLAN) circuit block and a central-processing-unit (CPU) circuit block designed by x86 architecture or by non x86 architectures, but not including any graphics-processing-unit (GPU) circuit block, a system-on chip (SOC) including a baseband circuit block, a graphics-processing-unit (GPU) circuit block and a central-processing-unit (CPU) circuit block designed by x86 architecture or by non x86 architectures, but not including any wireless local area network (WLAN) circuit block, a system-on chip (SOC) including a baseband circuit block and a wireless local area network (WLAN) circuit block, but not including any graphics-processing-unit (GPU) circuit block and any central-processing-unit (CPU) circuit block, or a system-on chip (SOC) including a graphics-processing-unit (GPU) circuit block and a wireless local area network (WLAN) circuit block, but not including any baseband circuit block and any central-processing-unit (CPU) circuit block. Alternatively, the chip **160** can be a chip including a central-processing-unit (CPU) circuit block designed by x86 architecture or by non x86 architecture, a graphics-processing-unit (GPU) circuit block, a baseband circuit block, a digital-signal-processing (DSP) circuit block, a memory circuit block, a Bluetooth circuit block, a global-positioning-system (GPS) circuit block, a wireless local area network (WLAN) circuit block, and/or a modem circuit block.

[0383] As shown in FIG. **71**, the chip **160** includes a semiconductor substrate **164** containing transistors, a passivation layer **162** under the semiconductor substrate **164**, multiple metal interconnections between the semiconductor substrate **164** and the passivation layer **162**, multiple dielectric layers between the semiconductor substrate **164** and the passivation layer **162**, multiple metal traces or pads **163** between the semiconductor substrate **164** and the passivation layer **162**, and the metal pillars or bumps **710** under multiple contact points, exposed by multiple openings **162***a* in the passivation layer **162**, of the metal traces or pads **163**. The transistors may be NMOS transistors, PMOS transistors or bipolar transistors. The dielectric layers can be composed of a single layer of silicon oxide, silicon nitride, silicon oxynitride, silicon carbon nitride or silicon oxycarbide, or a composite layer made of the previously described materials. The metal interconnections may have a thickness, e.g., between 10 nanometers and 2 micrometers, and include electroplated copper, aluminum, aluminum-copper-alloy or tungsten.

[0384] The contact points, exposed by the openings **162***a* in the passivation layer **162**, of the metal traces or pads **163** are at tops of the openings **162***a*, and the openings **162***a* in the passivation layer **162** are under the contact points of the metal traces or pads **163**. Each of the openings **162***a* may have a suitable width or diameter, e.g., between 0.5 and 100 micrometers, and preferably between 1 and 20 micrometers. The metal pillars or bumps **710** can be connected to the contact points, exposed by the openings **162***a*, of the metal traces or pads **163** through the openings **162***a*. The metal traces or pads **163** may include aluminum, aluminum-copper-alloy or electroplated copper.

[0385] Alternatively, the chip **160** as shown in FIG. **71** may further include multiple carbon nanotube interconnects between the semiconductor substrate **164** and the passivation layer **162**, and an organic polymer layer with a thickness, e.g., greater than 3 micrometers, such as between 3 and 20 micrometers, and preferably between 5 and 12 micrometers, under the passivation layer **162**. Multiple openings in the organic polymer layer are under the contact points, exposed by the openings **162***a* in the passivation layer **162**, of the metal traces or pads **163** and expose them. The organic polymer layer can be polyimide, benzocyclobutane (BCB), polybenzoxazole (PBO), poly-phenylene oxide (PPO), silosane, SU-8 or epoxy. In this case, the metal pillars or bumps **710** can be connected to the contact points, exposed by the openings **162***a*, of the metal traces or pads **163** through the openings in the organic polymer layer. The chip **160** may have the metal interconnections connected to the transistors through the carbon nanotube interconnects.

[0386] The semiconductor substrate **164** may have a thickness, e.g., greater than 5 micrometer, such as between 5 and 50 micrometers, between 10 and 100 micrometers or between 10 and 500 micrometers. The semiconductor substrate **164** can be a silicon substrate or a gallium arsenide (GaAs) substrate.

[0387] The passivation layer **162** can be formed by a suitable process or processes, e.g., a chemical vapor deposition (CVD) method. The passivation layer **162** can have a thickness, e.g., greater than 0.2 micrometers, such as between 0.3 and 1.5 micrometers. The passivation layer **162** can be made of silicon oxide (such as SiO_2), silicon nitride (such as Si_3N_4), silicon oxynitride, silicon oxycarbide, phosphosilicate glass (PSG), silicon carbon nitride or a composite of the previously described materials. For example, the passivation layer **162** may include two inorganic layers, and the two inorganic layers can be an oxide layer, such as silicon oxide or silicon oxycarbide, having a suitable thickness, e.g., between 0.3 and 1.5 micrometer and a nitride layer, such as silicon nitride, silicon oxynitride or silicon carbon nitride, having a suitable thickness, e.g., between 0.3 and 1.5 micrometers.

[0388] The metal pillars or bumps **710** after being bonded with the solder joints **720** may have a thickness, e.g., or height greater than 10 micrometers, such as between 10 and 100 micrometers, and preferably between 10 and 30 micrometers, and a suitable width or diameter, e.g., greater than 5 micrometers, such as between 10 and 100 micrometers, and preferably between 10 and 30 micrometers. The pitch between neighboring or adjacent pairs of metal pillars or bumps **710** can be selected as desired, e.g., greater than 80 micrometers, such as between 80 and 150 micrometers or between 150 and 300 micrometers, or less than 80 micrometers, such as between 5 and 50 micrometers or between 50 and 80 micrometers.

[0389] The metal pillars or bumps **710** between the solder joints **720** and the contact points, exposed by the openings **162***a*, of the metal traces or pads **163** are composed of an adhesion layer **711** under the contact points, exposed by the openings **162***a*, of the metal traces or pads **163** and under the passivation layer **162**, a seed layer **712** under the adhesion layer **711**, and a metal layer **713** under the seed layer **712** and over the solder joints **720**. The metal layer **713** can be connected to the contact points, exposed by the openings **162***a* in the passivation layer **162**, of the metal traces or pads **163**

through the seed layer **712** and the adhesion layer **711**, and to the contact points, exposed by the openings **98***a* in the polymer layer **98**, of the barrier/wetting layer **74** through the solder joints **720**.

[0390] The adhesion layer **711** may have a thickness, e.g., less than 1 micrometer, such as between 1 nanometer and 0.5 micrometers. The seed layer **712** may have a thickness, e.g., less than 1 micrometer, such as between 10 nanometers and 0.8 micrometers. The material of the adhesion layer **711** may include titanium, a titanium-tungsten alloy, titanium nitride, chromium, tantalum, tantalum nitride, nickel or nickel vanadium. The material of the seed layer **712** may include copper, silver, gold, nickel or titanium-copper alloy.

[0391] For example, when the adhesion layer **711** is a titanium-containing layer, such as a single layer of titanium-tungsten alloy, titanium or titanium nitride, having a thickness, e.g., less than 1 micrometer, such as between 1 nanometer and 0.5 micrometers, under the contact points, exposed by the openings **162***a*, of the metal traces or pads **163** and under the passivation layer **162**, the seed layer **712** can be a copper layer, a silver layer, a titanium-copper-alloy layer, a gold layer or a nickel layer with a thickness, e.g., less than 1 micrometer, such as between 10 nanometers and 0.8 micrometers, under the titanium-containing layer.

[0392] Alternatively, when the adhesion layer **711** is a tantalum-containing layer, such as a single layer of tantalum or tantalum nitride, having a thickness, e.g., less than 1 micrometer, such as between 1 nanometer and 0.5 micrometers, under the contact points, exposed by the openings **162***a*, of the metal traces or pads **163** and under the passivation layer **162**, the seed layer **712** can be a copper layer, a silver layer, a titanium-copper-alloy layer, a gold layer or a nickel layer with a thickness, e.g., less than 1 micrometer, such as between 10 nanometers and 0.8 micrometers, under the tantalum-containing layer.

[0393] Alternatively, when the adhesion layer **711** is a chromium-containing layer, such as a single layer of chromium, having a thickness, e.g., less than 1 micrometer, such as between 1 nanometer and 0.5 micrometers, under the contact points, exposed by the openings **162***a*, of the metal traces or pads **163** and under the passivation layer **162**, the seed layer **712** can be a copper layer, a silver layer, a titanium-copper-alloy layer, a gold layer or a nickel layer with a thickness, e.g., less than 1 micrometer, such as between 10 nanometers and 0.8 micrometers, under the chromium-containing layer.

[0394] Alternatively, when the adhesion layer **711** is a nickel-containing layer, such as a single layer of nickel or nickel vanadium, having a thickness, e.g., less than 1 micrometer, such as between 1 nanometer and 0.5 micrometers, under the contact points, exposed by the openings **162***a*, of the metal traces or pads **163** and under the passivation layer **162**, the seed layer **712** can be a copper layer, a silver layer, a titanium-copper-alloy layer, a gold layer or a nickel layer with a thickness, e.g., less than 1 micrometer, such as between 10 nanometers and 0.8 micrometers, under the nickel-containing layer.

[0395] The metal layer **713** may have a thickness, e.g., greater than 1 micrometer, such as between 2 and 30 micrometers, and preferably between 3 and 10 micrometers. Sidewalls of the metal layer **713** are not covered by the adhesion layer **711** and the seed layer **712**. The metal layer **713** can be a single layer of copper, silver, gold, palladium or nickel, or a composite layer made of the previously described metals.

[0396] For example, the metal layer **713** can be a single copper layer having a thickness, e.g., greater than 1 micrometer, such as between 2 and 30 micrometers, and preferably between 3 and 10 micrometers, under the seed layer **712**, preferably the previously described copper or titanium-copper-alloy seed layer **712**, and over the solder joints **720**.

[0397] Alternatively, the metal layer **713** can be a single silver layer having a thickness, e.g., greater than 1 micrometer, such as between 2 and 30 micrometers, and preferably between 3 and 10 micrometers, under the seed layer **712**, preferably the previously described silver seed layer **712**, and over the solder joints **720**.

[0398] Alternatively, the metal layer **713** can be a single gold layer having a thickness, e.g., greater than 1 micrometer, such as between 2 and 30 micrometers, and preferably between 3 and 10 micrometers, under the seed layer **712**, preferably the previously described gold seed layer **712**, and over the solder joints **720**.

[0399] Alternatively, the metal layer **713** can be a single nickel layer having a thickness, e.g., greater than 1 micrometer, such as between 2 and 30 micrometers, and preferably between 3 and 10 micrometers, under the seed layer **712**, preferably the previously described copper, nickel or titanium-copper-alloy seed layer **712**, and over the solder joints **720**.

[0400] Alternatively, the metal layer **713** can be composed of an electroplated copper layer having a thickness, e.g., greater than 5 micrometer, such as between 5 and 50 micrometers, and preferably between 10 and 35 micrometers, under the seed layer **712**, preferably the previously described copper or titanium-copper-alloy seed layer **712**, a nickel-containing layer having a thickness, e.g., between 0.5 and 10 micrometers, and preferably between 1 and 5 micrometers, under the electroplated copper layer, and a gold-containing layer having a thickness, e.g., between 0.05 and 2 micrometers, and preferably between 0.5 and 1 micrometers, under the nickel-containing layer and over the solder joints **720**.

[0401] The chip **160** may include input/output (I/O) circuits serving for chip probing testing (CP testing), for build-in-self testing or for external signal connection. Each of the input/output (I/O) circuits may include a driver, a receiver and/or an electro static discharge (ESD) circuit. One of the input/output (I/O) circuits has a total loading (total capacitance) between 15 pF (pico farad) and 50 pF. The chip **160** may have built-in self test (BIST) circuits for reducing the testing time for the system-in package or multichip module.

[0402] The solder joints **720** after being bonded with the metal pillars or bumps **710** may have a thickness, e.g., greater than 5 micrometers, such as between 5 and 50 micrometers, and preferably between 10 and 30 micrometers, and may include bismuth, indium, tin-lead alloy, tin-gold, tin-silver alloy or tin-silver-copper alloy.

[0403] Referring to FIG. **72**, after the step illustrated in FIG. **71**, the steps illustrated in FIGS. **40-52** can be performed to provide a system-in package or multichip module, and the system-in package or multichip module can be connected to a mother board, a printed circuit board, a metal substrate, a glass substrate or a ceramic substrate using the solder bumps or balls **29***a*.

[0404] Alternatively, referring to FIG. **73**, after the step illustrated in FIG. **71**, the steps illustrated in FIGS. **40-49**, **53** and **54** can be performed to provide a system-in package or multichip module, and the system-in package or multichip module can be connected to a mother board, a printed circuit

board, a metal substrate, a glass substrate or a ceramic substrate using the metal pillars or bumps **39**.

[0405] Regarding the system-in package or multichip module illustrated in FIG. **72** or **73**, a top perspective view of the patterned metal layer **7** can be referred to FIG. **37**, and the patterned metal layer **7** may include the clock interconnect, bus or trace **7***c*, the ground plane, bus or trace **7***g*, the power planes, buses or traces **7***p* and the signal interconnects, traces or lines **7***s*, as shown in FIG. **37**. A coverage ratio of the entire area of the patterned metal layer **7** covering a ground or polished surface including the top surfaces **54***a*, **64***a* and **87***a* of the system-in package or multichip module illustrated in FIG. **72** or **73** to the entire area of the ground or polished surface ranges from 50% to 95%, and preferably ranges from 60% to 90%.

[0406] The chip **160** of the system-in package or multichip module illustrated in FIG. **72** or **73** may have one of the metal traces or pads **163** connected to one or more of the metal traces or pads **66** in one or more of the chips **140** through, in sequence, one of the metal pillars or bumps **710**, one of the solder joints **720**, the patterned metal layer **7** such as the clock interconnect, bus or trace **7***c*, the ground plane, bus or trace **7***g*, the power plane, bus or trace **7***p* or the signal interconnect, trace or line **7***s*, one or more of the metal pillars or bumps **64**, and the patterned metal layer **6**.

[0407] The chip **160** of the system-in package or multichip module illustrated in FIG. **72** or **73** may have another one of the metal traces or pads **163** connected to one or more of the metal traces or pads **46** in one or more of the chips **130** through, in sequence, one of the metal pillars or bumps **710**, one of the solder joints **720**, the patterned metal layer **7** such as the clock interconnect, bus or trace **7***c*, the ground plane, bus or trace **7***g*, the power plane, bus or trace **7***p* or the signal interconnect, trace or line **7***s*, one or more of the metal pillars or bumps **54**, the patterned metal layer **5**, one or more of the metal pillars or bumps **44**, and the patterned metal layer **4**.

[0408] The chip **160** of the system-in package or multichip module illustrated in FIG. **72** or **73** may have another one of the metal traces or pads **163** connected to one or more of the metal traces or pads **26** in one or more of the chips **120** (one of them is shown in FIG. **72** or **73**) through, in sequence, one of the metal pillars or bumps **710**, one of the solder joints **720**, the patterned metal layer **7** such as the clock interconnect, bus or trace **7***c*, the ground plane, bus or trace **7***g*, the power plane, bus or trace **7***p* or the signal interconnect, trace or line **7***s*, one or more of the metal pillars or bumps **54**, the patterned metal layer **5**, one or more of the metal pillars or bumps **34**, the patterned metal layer **3**, one or more of the metal pillars or bumps **24**, and the patterned metal layer **2**.

[0409] One of the chips **120**, **130**, **140** and **160** shown in FIG. **72** or **73** may include small input/output (I/O) circuits serving for intra-chip signal connection, having a data bit width, e.g., equal to or more than 128, equal to or more than 512, between 32 and 2048, between 128 and 2048, between 256 and 1024, or between 512 and 1024, to the other one of the chips **120**, **130**, **140** and **160**. Each of the small I/O circuits can be composed of a small driver and a small or no ESD (electro static discharge) circuit, or can be composed of a small receiver and a small or no ESD circuit. For exemplary embodiments, one of the small I/O circuits may have a total loading (total capacitance) between 0.1 pF and 10 pF, and preferably between 0.1 pF and 2 pF. For exemplary embodiments, the small driver may have an output capacitance (loading) between 0.01 pF and 10 pF, between 0.1 pF and 10 pF, between 0.1 pF and 5 pF, between 0.1 pF and 2 pF, between 0.1 pF and 1 pF, or between 0.01 pF and 1 pF. For exemplary embodiments, the small receiver may have an input capacitance (loading) between 0.01 pF and 10 pF, between 0.1 pF and 10 pF, between 0.1 pF and 5 pF, between 0.1 pF and 2 pF, between 0.1 pF and 1 pF, or between 0.01 pF and 1 pF.

[0410] FIG. **74** shows a module according to an embodiment of the present disclosure, which can be formed by the following steps. After the steps illustrated in FIGS. **1-38**, a singulation process can be performed to cut the substrate **110**, the filling or encapsulating layers **85**, **86** and **87** and the polymer layer **98** and to provide a system-in package or multichip module. Next, the system-in package or multichip module is attached to a top side of a ball-grid-array (BGA) substrate **810** by a glue material **820**. Next, using a wirebonding process, one end of each wirebonded wire **830** can be ball bonded with one of the contact points, exposed by the openings **98***a* in the polymer layer **98**, of the metal layer **73** of the system-in package or multichip module, and the other end of each wirebonded wire **830** can be wedge bonded with one of contact points of the top side of the ball-grid-array (BGA) substrate **810**. Next, a molding compound **850** including epoxy and carbon filler is formed on the top side of the ball-grid-array (BGA) substrate **810**, on the system-in package or multichip module and on the wirebonded wires **830**, encapsulating the system-in package or multichip module and the wirebonded wires **830**. Next, multiple solder balls **840** having a diameter between 250 and 1000 micrometers are formed on a bottom side of the ball-grid-array (BGA) substrate **810**. Next, a singulation process can be performed to cut the ball-grid-array (BGA) substrate **810** and the molding compound **850** and to provide the module shown in FIG. **74**. The module shown in FIG. **74** can be connected to a mother board, a printed circuit board, a metal substrate, a glass substrate or a ceramic substrate using the solder balls **840**.

[0411] The ball-grid-array (BGA) substrate **810** may include bismaleimide triazine (BT), fiberglass or ceramic. The glue material **820** can be polyimide, benzocyclobutane (BCB), polybenzoxazole (PBO), poly-phenylene oxide (PPO), epoxy, silosane or SU-8, and may have a thickness, e.g., greater than 3 micrometers, such as between 3 and 100 micrometers, and preferably between 5 and 50 micrometers or between 10 and 30 micrometers. The contact points, exposed by the openings **98***a* in the polymer layer **98**, of the metal layer **73** of the system-in package or multichip module can be connected to the contact points of the top side of the ball-grid-array (BGA) substrate **810** through the wirebonded wires **830**. The wirebonded wires **830** can be gold wires, copper wires or aluminum wires each having a diameter between 5 and 50 micrometers, and preferably between 10 and 35 micrometers. The solder balls **840** may include bismuth, indium, tin-lead alloy, tin-silver alloy, tin-silver-copper alloy or tin-gold.

[0412] FIG. **75** shows a schematically top perspective view of the patterned metal layer **7** of the module illustrated in FIG. **74**. Referring to FIGS. **74** and **75**, the patterned metal layer **7** may include the previously described clock interconnect, bus or trace **7***c*, the previously described ground plane, bus or trace **7***g*, the previously described power planes, buses or traces **7***p*, and the previously described signal interconnects, traces or lines **7***s*. The wirebonded wires **830** can be bonded with the clock interconnect, bus or trace **7***c*, the ground plane, bus or trace **7***g*, the power planes, buses or traces **7***p* and the

signal interconnects, traces or lines **7***s*. For more detailed description about FIGS. **74** and **75**, please refer to the illustration in FIGS. **36** and **37**.

[0413] FIGS. **76-84** show a process for forming another system-in package or multichip module according to another embodiment of the present disclosure. Referring to FIG. **76**, after the steps illustrated in FIGS. **1-38** are performed, an adhesion layer **531** having a thickness, e.g., less than 1 micrometer, such as between 1 nanometer and 0.5 micrometers, can be formed on the polymer layer **98** and on the contact points, exposed by the openings **98***a*, of the metal layer **73** by using a physical-vapor deposition (PVD) process, such as sputtering process or evaporation process. Next, a seed layer **532** having a thickness, e.g., less than 1 micrometer, such as between 10 nanometers and 0.8 micrometers, can be formed on the adhesion layer **531** by using a physical-vapor deposition (PVD) process, such as sputtering process or evaporation process, or an electroless plating process. Next, a photoresist layer **103** can be formed on the seed layer **532** by using a spin-on coating process or a lamination process. Next, the photoresist layer **103** is patterned with processes of lithographic, light exposure and development to form multiple openings **103***a* in the photoresist layer **103** exposing the seed layer **532**.

[0414] The material of the adhesion layer **531** may include titanium, a titanium-tungsten alloy, titanium nitride, chromium, tantalum, tantalum nitride, nickel or nickel vanadium. The material of the seed layer **532** may include copper, silver, gold or titanium-copper alloy.

[0415] For example, when the adhesion layer **531** is formed by sputtering a titanium-containing layer, such as a single layer of titanium-tungsten alloy, titanium or titanium nitride, having a thickness, e.g., less than 1 micrometer, such as between 1 nanometer and 0.5 micrometers, on the polymer layer **98** and on the contact points, exposed by the openings **98***a*, of the metal layer **73**, the seed layer **532** can be formed by sputtering a copper layer, a silver layer, a titanium-copper-alloy layer or a gold layer with a thickness, e.g., less than 1 micrometer, such as between 10 nanometers and 0.8 micrometers, on the titanium-containing layer.

[0416] Alternatively, when the adhesion layer **531** is formed by sputtering a tantalum-containing layer, such as a single layer of tantalum or tantalum nitride, having a thickness, e.g., less than 1 micrometer, such as between 1 nanometer and 0.5 micrometers, on the polymer layer **98** and on the contact points, exposed by the openings **98***a*, of the metal layer **73**, the seed layer **532** can be formed by sputtering a copper layer, a silver layer, a titanium-copper-alloy layer or a gold layer with a thickness, e.g., less than 1 micrometer, such as between 10 nanometers and 0.8 micrometers, on the tantalum-containing layer.

[0417] Alternatively, when the adhesion layer **531** is formed by sputtering a chromium-containing layer, such as a single layer of chromium, having a thickness, e.g., less than 1 micrometer, such as between 1 nanometer and 0.5 micrometers, on the polymer layer **98** and on the contact points, exposed by the openings **98***a*, of the metal layer **73**, the seed layer **532** can be formed by sputtering a copper layer, a silver layer, a titanium-copper-alloy layer or a gold layer with a thickness, e.g., less than 1 micrometer, such as between 10 nanometers and 0.8 micrometers, on the chromium-containing layer.

[0418] Alternatively, when the adhesion layer **531** is formed by sputtering a nickel-containing layer, such as a single layer of nickel or nickel vanadium, having a thickness, e.g., less than 1 micrometer, such as between 1 nanometer and 0.5 micrometers, on the polymer layer **98** and on the contact points, exposed by the openings **98***a*, of the metal layer **73**, the seed layer **532** can be formed by sputtering a copper layer, a silver layer, a titanium-copper-alloy layer or a gold layer with a thickness, e.g., less than 1 micrometer, such as between 10 nanometers and 0.8 micrometers, on the nickel-containing layer.

[0419] Referring to FIG. **77**, after the step illustrated in FIG. **76**, a metal layer **533**, a conductive layer, having a thickness, e.g., greater than 1 micrometer, such as between 2 and 30 micrometers, and preferably between 3 and 10 micrometers, can be formed on the seed layer **532** exposed by the openings **103***a* and in the openings **103***a* by using a process including an electroplating process. The metal layer **533** can be a single layer of copper, silver, gold, palladium, platinum, rhodium, ruthenium, rhenium or nickel, or a composite layer made of the previously described metals.

[0420] For example, the metal layer **533** can be a single metal layer formed by electroplating a copper layer, to a thickness, e.g., greater than 1 micrometer, such as between 2 and 30 micrometers, and preferably between 3 and 10 micrometers, in the openings **103***a* and on the seed layer **532**, preferably the previously described copper or titanium-copper-alloy seed layer **532**, exposed by the openings **103***a*.

[0421] Alternatively, the metal layer **533** can be a single metal layer formed by electroplating a gold layer, to a thickness, e.g., greater than 1 micrometer, such as between 2 and 30 micrometers, and preferably between 3 and 10 micrometers, in the openings **103***a* and on the seed layer **532**, preferably the previously described gold seed layer **532**, exposed by the openings **103***a*.

[0422] Referring to FIG. **78**, after forming the metal layer **533**, the photoresist layer **103** is removed using a chemical solution containing amine or $NaCO_3$. Next, the seed layer **532** not under the metal layer **533** is removed by using a wet chemical etching process or a reactive ion etching (RIE) process. Next, the adhesion layer **531** not under the metal layer **533** is removed by using a wet chemical etching process or a reactive ion etching (RIE) process.

[0423] Accordingly, the adhesion layer **531**, the seed layer **532** and the metal layer **533** compose a patterned metal layer **530** formed on the polymer layer **98** and on the contact points, exposed by the openings **98***a*, of the metal layer **73**. The patterned metal layer **530** can be connected to the patterned metal layer **7** through the openings **98***a* in the polymer layer **98**. The patterned metal layer **530** may include a metal plane, bus or trace, such as signal trace, clock bus, clock trace, power plane, power bus, power trace, ground plane, ground bus or ground trace, connecting to the patterned metal layer **7**.

[0424] Next, referring to FIG. **79**, a polymer layer **540** can be formed on the metal layer **533** of the patterned metal layer **530** and on the polymer layer **98**, and multiple openings **540***a* in the polymer layer **540** are over multiple contact points of the metal layer **533** of the patterned metal layer **530** and expose them. The polymer layer **540** can be a polyimide layer, a polybenzoxazole (PBO) layer, a benzocyclobutane (BCB) layer, an epoxy layer, a poly-phenylene oxide (PPO) layer, a silosane layer or a SU-8 layer, and may have a thickness, e.g., greater than 5 micrometers, such as between 5 and 50 micrometers, and preferably between 5 and 15 micrometers or between 5 and 10 micrometers.

[0425] Next, referring to FIG. **80**, an adhesion layer **18** having a thickness, e.g., less than 1 micrometer, such as between 1 nanometer and 0.5 micrometers, can be formed on the contact points, exposed by the openings **540***a*, of the metal layer **533** and on the polymer layer **540** by using a physical-vapor deposition (PVD) process, such as sputtering process or evaporation process. Next, a seed layer **19** having a thickness, e.g., less than 1 micrometer, such as between 10 nanometers and 0.8 micrometers, can be formed on the adhesion layer **18** by using a physical-vapor deposition (PVD) process, such as sputtering process or evaporation process, or an electroless plating process. Next, a photoresist layer **89** can be formed on the seed layer **19** by using a spin-on coating process or a lamination process. Next, the photoresist layer **89** is patterned with processes of lithographic, light exposure and development to form multiple openings **89***b* in the photoresist layer **89** exposing the seed layer **19**.

[0426] The material of the adhesion layer **18** may include titanium, a titanium-tungsten alloy, titanium nitride, chromium, tantalum, tantalum nitride, nickel or nickel vanadium. The material of the seed layer **19** may include copper, silver, gold or titanium-copper alloy.

[0427] For example, when the adhesion layer **18** is formed by sputtering a titanium-containing layer, such as a single layer of titanium-tungsten alloy, titanium or titanium nitride, having a thickness, e.g., less than 1 micrometer, such as between 1 nanometer and 0.5 micrometers, on the contact points, exposed by the openings **540***a*, of the metal layer **533** and on the polymer layer **540**, the seed layer **19** can be formed by sputtering a copper layer, a silver layer, a titanium-copper-alloy layer or a gold layer with a thickness, e.g., less than 1 micrometer, such as between 10 nanometers and 0.8 micrometers, on the titanium-containing layer.

[0428] Alternatively, when the adhesion layer **18** is formed by sputtering a tantalum-containing layer, such as a single layer of tantalum or tantalum nitride, having a thickness, e.g., less than 1 micrometer, such as between 1 nanometer and 0.5 micrometers, on the contact points, exposed by the openings **540***a*, of the metal layer **533** and on the polymer layer **540**, the seed layer **19** can be formed by sputtering a copper layer, a silver layer, a titanium-copper-alloy layer or a gold layer with a thickness, e.g., less than 1 micrometer, such as between 10 nanometers and 0.8 micrometers, on the tantalum-containing layer.

[0429] Alternatively, when the adhesion layer **18** is formed by sputtering a chromium-containing layer, such as a single layer of chromium, having a thickness, e.g., less than 1 micrometer, such as between 1 nanometer and 0.5 micrometers, on the contact points, exposed by the openings **540***a*, of the metal layer **533** and on the polymer layer **540**, the seed layer **19** can be formed by sputtering a copper layer, a silver layer, a titanium-copper-alloy layer or a gold layer with a thickness, e.g., less than 1 micrometer, such as between 10 nanometers and 0.8 micrometers, on the chromium-containing layer.

[0430] Alternatively, when the adhesion layer **18** is formed by sputtering a nickel-containing layer, such as a single layer of nickel or nickel vanadium, having a thickness, e.g., less than 1 micrometer, such as between 1 nanometer and 0.5 micrometers, on the contact points, exposed by the openings **540***a*, of the metal layer **533** and on the polymer layer **540**, the seed layer **19** can be formed by sputtering a copper layer, a silver layer, a titanium-copper-alloy layer or a gold layer with a thickness, e.g., less than 1 micrometer, such as between 10 nanometers and 0.8 micrometers, on the nickel-containing layer.

[0431] Next, referring to FIG. **81**, a metal layer **27**, a conductive layer, having a thickness, e.g., greater than 1 micrometer, such as between 2 and 100 micrometers, and preferably between 5 and 60 micrometers or between 10 and 50 micrometers, can be formed on the seed layer **19** exposed by the openings **89***b* and in the openings **89***b* by using an electroplating process. Next, a metal layer **28**, a barrier layer, having a thickness, e.g., between 0.2 and 10 micrometers, and preferably between 1 and 5 micrometers, can be formed in the openings **89***b* and on the metal layer **27** in the openings **89***b* by using an electroplating or electroless plating process. Next, a solder layer **29** having a thickness, e.g., greater than 5 micrometers, such as between 5 and 400 micrometers, and preferably between 10 and 100 micrometers, can be formed in the openings **89***b* and on the metal layer **28** in the openings **89***b* by using an electroplating or electroless plating process.

[0432] The metal layer **27** may include copper, silver or gold. For example, the metal layer **27** can be a single metal layer formed by electroplating a copper layer, to a thickness, e.g., greater than 1 micrometer, such as between 2 and 100 micrometers, and preferably between 5 and 60 micrometers or between 10 and 50 micrometers, in the openings **89***b* and on the seed layer **19**, preferably the previously described copper or titanium-copper-alloy seed layer **19**, exposed by the openings **89***b*.

[0433] The metal layer **28** may include nickel, nickel vanadium or gold. For example, the metal layer **28** can be a single metal layer formed by electroplating or electroless plating a nickel layer or a nickel-vanadium layer, to a thickness, e.g., between 0.2 and 10 micrometers, and preferably between 1 and 5 micrometers, in the openings **89***b* and on the metal layer **27**, preferably the previously described electroplated copper layer **27**, in the openings **89***b*. Alternatively, the metal layer **28** can be composed of double metal layers formed by electroplating or electroless plating a nickel layer, to a thickness, e.g., between 0.2 and 10 micrometers, and preferably between 1 and 5 micrometers, in the openings **89***b* and on the metal layer **27**, preferably the previously described electroplated copper layer **27**, in the openings **89***b*, and then electroplating or electroless plating a gold layer, to a thickness, e.g., between 0.005 and 1 micrometers, and preferably between 0.05 and 0.1 micrometers, in the openings **89***b* and on the electroplated or electroless plated nickel layer in the openings **89***b*.

[0434] The solder layer **29** may include bismuth, indium, tin, a tin-lead alloy, a tin-silver alloy, a tin-silver-copper alloy or a tin-gold alloy. For example, the solder layer **29** can be a single metal layer formed by electroplating a bismuth-containing layer, an indium-containing layer or a tin-containing layer of a tin-lead alloy, a tin-silver alloy, a tin-silver-copper alloy or a tin-gold alloy, to a thickness, e.g., greater than 5 micrometers, such as between 5 and 400 micrometers, and preferably between 10 and 100 micrometers, in the openings **89***b* and on the metal layer **28**, preferably the previously described electroplated or electroless plated nickel or gold layer **28**, in the openings **89***b*.

[0435] Referring to FIG. **82**, after forming the solder layer **29** illustrated in FIG. **81**, the photoresist layer **89** is removed using a chemical solution containing amine or $NaCO_3$. Next, the seed layer **19** not under the metal layer **27** is removed by using a wet chemical etching process or a reactive ion etching

(RIE) process. Next, the adhesion layer **18** not under the metal layer **27** is removed by using a wet chemical etching process or a reactive ion etching (RIE) process.

[0436] Accordingly, the adhesion layer **18**, the seed layer **19** and the metal layers **27** and **28** compose an under bump metallurgic (UBM) layer formed on the contact points, exposed by the openings **540***a*, of the metal layer **533** and on the polymer layer **540**, and the solder layer **29** is formed on the metal layer **28**, preferably the previously described electroplated or electroless plated nickel or gold layer **28**, of the under bump metallurgic (UBM) layer.

[0437] Referring to FIG. **83**, after the step illustrated in FIG. **82**, the solder layer **29** is reflowed to form multiple solid solder bumps or balls **29***a* on the metal layer **28**, preferably the previously described electroplated or electroless plated nickel or gold layer **28**, of the under bump metallurgic (UBM) layer by using a reflowing process. Next, a protection layer **107** having a thickness, e.g., greater than 5 micrometers, such as between 10 and 100 micrometers, and preferably between 20 and 50 micrometers, can be optionally formed on a bottom side of the substrate **110**. Next, a singulation process can be performed to cut the substrate **110**, the filling or encapsulating layers **85**, **86** and **87** and the polymer layers **98** and **540** and to singularize a plurality of the system-in package or multichip module shown in FIG. **83**. The system-in package or multichip module shown in FIG. **83** can be connected to a mother board, a printed circuit board, a metal substrate, a glass substrate or a ceramic substrate using the solder bumps or balls **29***a*.

[0438] The protection layer **107** can be a polymer layer such as polyimide layer, polybenzoxazole (PBO) layer, benzocyclobutane (BCB) layer, epoxy layer, poly-phenylene oxide (PPO) layer, silosane layer or SU-8 layer.

[0439] Alternatively, referring to FIG. **84**, after the step illustrated in FIG. **82**, the solder layer **29** can be reflowed to form multiple solid solder bumps or balls **29***a* on the metal layer **28**, preferably the previously described electroplated or electroless plated nickel or gold layer **28**, of the under bump metallurgic (UBM) layer by using a reflowing process. Next, the steps illustrated in FIGS. **40-48** can be performed. Next, multiple discrete (preformed) passive components **910**, such as capacitors, inductors or resistors, are mounted onto the contact points, exposed by the openings **99***a* in the polymer layer **99**, of the metal layer **9***c* through multiple solder joints **915** including bismuth, indium, tin-lead alloy, tin-silver alloy, tin-silver-copper alloy or tin-gold. Next, a singulation process can be performed to cut the substrate **110**, the filling or encapsulating layers **85**, **86** and **87** and the polymer layers **98** and **540** and to singularize a plurality of the system-in package or multichip module shown in FIG. **84**. The system-in package or multichip module shown in FIG. **84** can be connected to a mother board, a printed circuit board, a metal substrate, a glass substrate or a ceramic substrate using the solder bumps or balls **29***a*.

[0440] The patterned metal layer **1** of the system-in package or multichip module shown in FIG. **83** or **84** may include multiple clock interconnects, buses or traces, multiple ground planes, buses or traces, multiple power planes, buses or traces, and multiple signal interconnects or traces.

[0441] For example, one of the discrete passive components **910** shown in FIG. **84** may have a first terminal connected to one of the signal interconnects or traces provided by the patterned metal layer **1** through, in sequence, one of the solder joints **915**, the patterned metal layer **9** and one of the through-hole connections **17**, and a second terminal connected to another one of the signal interconnects or traces provided by the patterned metal layer **1** through, in sequence, another one of the solder joints **915**, the patterned metal layer **9** and another one of the through-hole connections **17**.

[0442] Alternatively, one of the discrete passive components **910** shown in FIG. **84** may have a first terminal connected to one of the signal interconnects or traces provided by the patterned metal layer **1** through, in sequence, one of the solder joints **915**, the patterned metal layer **9** and one of the through-hole connections **17**, and a second terminal connected to one of the ground planes, buses or traces provided by the patterned metal layer **1** through, in sequence, another one of the solder joints **915**, the patterned metal layer **9** and another one of the through-hole connections **17**.

[0443] Alternatively, one of the discrete passive components **910** shown in FIG. **84** may have a first terminal connected to one of the power planes, buses or traces provided by the patterned metal layer **1** through, in sequence, one of the solder joints **915**, the patterned metal layer **9** and one of the through-hole connections **17**, and a second terminal connected to one of the ground planes, buses or traces provided by the patterned metal layer **1** through, in sequence, another one of the solder joints **915**, the patterned metal layer **9** and another one of the through-hole connections **17**.

[0444] Regarding the system-in package or multichip module illustrated in FIG. **83** or **84**, a top perspective view of the patterned metal layer **7** can be referred to FIG. **37**, and the patterned metal layer **7** may include the clock interconnect, bus or trace **7***c*, the ground plane, bus or trace **7***g*, the power planes, buses or traces **7***p* and the signal interconnects, traces or lines **7***s*, as shown in FIG. **37**. For example, one of the solder bumps or balls **29***a* shown in FIG. **83** or **84** can be connected to the clock interconnect, bus or trace **7***c*, the ground plane, bus or trace **7***g*, one of the power planes, buses or traces **7***p* or one of the signal interconnects, traces or lines **7***s* through the under bump metallurgic (UBM) layer and the patterned metal layer **530**.

[0445] The solder bumps or balls **29***a* shown in FIG. **83** or **84** have a bump height greater than 5 micrometers, such as between 5 and 400 micrometers, and preferably between 10 and 100 micrometers, and a suitable width or diameter, e.g., between 20 and 400 micrometers, and preferably between 50 and 100 micrometers. The solder bumps or balls **29***a* shown in FIG. **83** or **84** can be bismuth-containing bumps or balls, indium-containing bumps or balls, or tin-containing bumps or balls of a tin-lead alloy, a tin-silver alloy, a tin-silver-copper alloy or a tin-gold alloy.

[0446] One of the chips **120**, **130** and **140** shown in FIG. **52**, **54**, **55**, **66**, **67**, **74**, **83**, **84** or **104** may include small input/output (I/O) circuits serving for intra-chip signal connection, having a data bit width, e.g., equal to or more than 128, equal to or more than 512, between 32 and 2048, between 128 and 2048, between 256 and 1024, or between 512 and 1024, to the other one of the chips **120**, **130** and **140**. Each of the small I/O circuits can be composed of a small driver and a small or no ESD (electro static discharge) circuit, or can be composed of a small receiver and a small or no ESD circuit. For some application, one of the small I/O circuits may have a total loading (total capacitance) between 0.1 pF and 10 pF, and preferably between 0.1 pF and 2 pF. In some instances, the small driver may have an output capacitance (loading) between 0.01 pF and 10 pF, between 0.1 pF and 10 pF, between 0.1 pF and 5 pF, between 0.1 pF and 2 pF, between

0.1 pF and 1 pF, or between 0.01 pF and 1 pF. For exemplary embodiments, the small receiver may have an input capacitance (loading) between 0.01 pF and 10 pF, between 0.1 pF and 10 pF, between 0.1 pF and 5 pF, between 0.1 pF and 2 pF, between 0.1 pF and 1 pF, or between 0.01 pF and 1 pF.

[0447] FIG. **85** shows an electronic device in accordance with an exemplary embodiment of the present disclosure. The electronic device may include a circuit board **999** and a system-in package or multichip module **777**. The circuit board **999** can be a mother board, a printed circuit board, a metal substrate, a glass substrate or a ceramic substrate. The system-in package or multichip module **777** may include a supporting substrate **811**, the previously described chips **140** attached to the supporting substrate **811** by a glue material **79**, the previously described filling or encapsulating layer **87** on the supporting substrate **811** and on the chips **140**, a plurality of the previously described polymer layer **98** over the chips **140** and over the filling or encapsulating layer **87**, a plurality of the previously described patterned metal layer **7** over the chips **140**, over the filling or encapsulating layer **87** and in the polymer layers **98**, and multiple metal bumps **640** on the topmost polymer layer **98** and on the topmost patterned metal layer **7** exposed by multiple openings **98***a* in the topmost polymer layer **98**. Alternatively, the supporting substrate **811** can be removed, that is, the system-in package or multichip module **777** may not include the supporting substrate **811** under the chips **140** and the filling or encapsulating layer **87**.

[0448] The system-in package or multichip module **777** can be connected to the circuit board **999** through multiple solder bumps **650**. The solder bumps **650** are between multiple contact points **201** of the circuit board **999** and the metal bumps **640** of the system-in package or multichip module **777**. The solder bumps **650** can be performed on the metal bumps **640** of the system-in package or multichip module **777**, and then the solder bumps **650** of the system-in package or multichip module **777** can be bonded with the contact points **201** of the circuit board **999**. Alternatively, the solder bumps **650** can be performed on the contact points **201** of the circuit board **999**, and then the metal bumps **640** of the system-in package or multichip module **777** can be bonded with the solder bumps **650** of the circuit board **999**.

[0449] The solder bumps **650** may have a bump height greater than 5 micrometers, such as between 5 and 400 micrometers, and preferably between 10 and 100 micrometers, and a suitable width or diameter, e.g., between 20 and 400 micrometers, and preferably between 50 and 100 micrometers. The solder bumps **650** may include bismuth, indium, a tin-lead alloy, a tin-silver alloy, a tin-silver-copper alloy or a tin-gold alloy or other suitable materials.

[0450] The supporting substrate **811** of the system-in package or multichip module **777** may include bismaleimide triazine (BT), fiberglass, ceramic, glass, silicon, copper or aluminum. For example, the supporting substrate **811** can be a print circuit board (PCB), a silicon substrate, a glass substrate, a ceramic substrate or a metal substrate.

[0451] The glue material **79** can be polyimide, benzocyclobutane (BCB), polybenzoxazole (PBO), poly-phenylene oxide (PPO), epoxy, silosane or SU-8, and may have a thickness, e.g., greater than 3 micrometers, such as between 3 and 100 micrometers, and preferably between 5 and 50 micrometers or between 10 and 30 micrometers.

[0452] Each of the metal pillars or bumps **64** of the chips **140** in the system-in package or multichip module **777** has a top surface not covered by the filling or encapsulating layer **87**, and the top surfaces of the metal pillars or bumps **64** may be substantially coplanar with a top surface of the filling or encapsulating layer **87**.

[0453] Each of the patterned metal layers **7** can be composed of the previously described adhesion layer **71**, the previously described seed layer **72** on the adhesion layer **71**, and the previously described metal layer **73** on the seed layer **72**. The bottommost patterned metal layer **7** is formed on the top surface of the filling or encapsulating layer **87** and on the top surfaces of the metal pillars or bumps **64**. The adhesion layer **71** of the bottommost patterned metal layer **7** is formed on the top surface of the filling or encapsulating layer **87** and on the top surfaces of the metal pillars or bumps **64**. The bottommost polymer layer **98** is formed on the top surface of the filling or encapsulating layer **87** and on the metal layer **73** of the bottommost patterned metal layer **7**, and multiple openings **98***a* in the bottommost polymer layer **98** are over multiple contact points of the metal layer **73** of the bottommost patterned metal layer **7** and expose them. The middle patterned metal layer **7** is formed on the bottommost polymer layer **98** and on the contact points, exposed by the openings **98***a* in the bottommost polymer layer **98**, of the metal layer **73** of the bottommost patterned metal layer **7**. The adhesion layer **71** of the middle patterned metal layer **7** is formed on the bottommost polymer layer **98** and on the contact points, exposed by the openings **98***a* in the bottommost polymer layer **98**, of the metal layer **73** of the bottommost patterned metal layer **7**. The middle polymer layer **98** is formed on the bottommost polymer layer **98** and on the middle patterned metal layer **7**, and multiple openings **98***a* in the middle polymer layer **98** are over multiple contact points of the metal layer **73** of the middle patterned metal layer **7** and expose them. The topmost patterned metal layer **7** is formed on the middle polymer layer **98** and on the contact points, exposed by the openings **98***a* in the middle polymer layer **98**, of the metal layer **73** of the middle patterned metal layer **7**. The adhesion layer **71** of the topmost patterned metal layer **7** is formed on the middle polymer layer **98** and on the contact points, exposed by the openings **98***a* in the middle polymer layer **98**, of the metal layer **73** of the middle patterned metal layer **7**. The topmost polymer layer **98** is formed on the middle polymer layer **98** and on the metal layer **73** of the topmost patterned metal layer **7**, and the openings **98***a* in the topmost polymer layer **98** are over multiple contact points of the metal layer **73** of the topmost patterned metal layer **7** and expose them. The process of forming the patterned metal layer **7** as shown in FIG. **85** can be referred to as the process of forming the patterned metal layer **7** as illustrated in FIGS. **33-36**.

[0454] The metal bumps **640** may be composed of an adhesion layer **641**, a seed layer **642** and two metal layers **643** and **644**. The adhesion layer **641**, which may have a thickness, e.g., less than 1 micrometer, such as between 1 nanometer and 0.5 micrometers, is formed on the topmost polymer layer **98** and on the contact points, exposed by the openings **98***a* in the topmost polymer layer **98**, of the metal layer **73** of the topmost patterned metal layer **7**. The seed layer **642**, which may have a thickness, e.g., less than 1 micrometer, such as between 10 nanometers and 0.8 micrometers, is formed on the adhesion layer **641**. The material of the adhesion layer **641** may include titanium, a titanium-tungsten alloy, titanium nitride, chromium, tantalum, tantalum nitride, nickel or nickel vanadium. The material of the seed layer **642** may include copper, silver, gold or titanium-copper alloy. For example, when the

adhesion layer **641** is a titanium-containing layer, such as a single layer of titanium-tungsten alloy, titanium or titanium nitride, having a thickness, e.g., less than 1 micrometer, such as between 1 nanometer and 0.5 micrometers, on the topmost polymer layer **98** and on the contact points, exposed by the openings **98***a* in the topmost polymer layer **98**, of the metal layer **73** of the topmost patterned metal layer **7**, the seed layer **642** can be formed by sputtering a copper layer, a silver layer, a titanium-copper-alloy layer or a gold layer with a thickness, e.g., less than 1 micrometer, such as between 10 nanometers and 0.8 micrometers, on the titanium-containing layer.

[0455] The metal layer **643** is formed on the seed layer **642** and has a thickness, e.g., greater than 1 micrometer, such as between 2 and 100 micrometers, and preferably between 5 and 60 micrometers or between 10 and 50 micrometers. The metal layer **643** may include copper, silver or gold. For example, the metal layer **643** can be a single metal layer formed by electroplating a copper layer, to a thickness, e.g., greater than 1 micrometer, such as between 2 and 100 micrometers, and preferably between 5 and 60 micrometers or between 10 and 50 micrometers, on the seed layer **642**, preferably the previously described copper or titanium-copper-alloy seed layer **642**.

[0456] The metal layer **644** serving as barrier layer or solder wetting layer is formed on the metal layer **643** and has a thickness, e.g., between 0.2 and 10 micrometers, and preferably between 1 and 5 micrometers. The metal layer **644** can be a single layer of nickel, nickel vanadium or gold, or a composite layer made of the previously described metals. For example, the metal layer **644** can be a nickel-containing layer, such as a single layer of nickel or nickel vanadium, having a thickness, e.g., between 0.2 and 10 micrometers, and preferably between 1 and 5 micrometers, on the metal layer **643**, preferably the previously described electroplated copper layer **643**, and under solder bumps **650**. Alternatively, the metal layer **644** can be a gold-containing layer, such as a single layer of gold, having a thickness, e.g., between 0.2 and 10 micrometers, and preferably between 1 and 5 micrometers, on the metal layer **643**, preferably the previously described electroplated copper layer **643**, and under solder bumps **650**. Alternatively, the metal layer **644** may include a nickel-containing layer having a thickness, e.g., between 0.2 and 10 micrometers, and preferably between 1 and 5 micrometers, on the metal layer **643**, preferably the previously described electroplated copper layer **643**, and a gold-containing layer having a thickness, e.g., between 0.2 and 10 micrometers, and preferably between 1 and 5 micrometers, on the nickel-containing layer and under solder bumps **650**.

[0457] In FIG. **85**, one of the chips **140**, such as one of chips **140***a*, has one of the metal pillars or bumps **64** connected to one of the metal pillars or bumps **64** of another one of the chips **140**, such as one of chips **140***b*, through a metal interconnect or trace, such as power plane, power trace, ground plane, ground trace or signal trace, provided by the bottommost patterned metal layer **7**. One of the chips **140***a* has another one of the metal pillars or bumps **64** connected to another one of the metal pillars or bumps **64** of one of the chips **140***b* through the bottommost patterned metal layer **7** and through a metal interconnect or trace, such as power plane, power trace, ground plane, ground trace or signal trace, provided by the middle patterned metal layer **7**. Each of the chips **140***a* has another one of the metal pillars or bumps **64** connected to one of the solder bumps **650**, vertically over or not vertically over the metal pillar or bump **64** connecting thereto, through the patterned metal layers **7** and one of the metal bumps **640**.

[0458] One of the chips **140** shown in FIG. **85** may include small input/output (I/O) circuits serving for intra-chip signal connection, having a data bit width, e.g., equal to or more than 128, equal to or more than 512, between 32 and 2048, between 128 and 2048, between 256 and 1024, or between 512 and 1024, to the other one of the chips **140**. Each of the small I/O circuits can be composed of a small driver and a small or no ESD (electro static discharge) circuit, or can be composed of a small receiver and a small or no ESD circuit. In exemplary embodiments, one of the small I/O circuits may have a total loading (total capacitance) between 0.1 pF and 10 pF, and preferably between 0.1 pF and 2 pF. In exemplary embodiments, the small driver may have an output capacitance (loading) between 0.01 pF and 10 pF, between 0.1 pF and 10 pF, between 0.1 pF and 5 pF, between 0.1 pF and 2 pF, between 0.1 pF and 1 pF, or between 0.01 pF and 1 pF. The small receiver may have an input capacitance (loading) between 0.01 pF and 10 pF, between 0.1 pF and 10 pF, between 0.1 pF and 5 pF, between 0.1 pF and 2 pF, between 0.1 pF and 1 pF, or between 0.01 pF and 1 pF for some applications.

[0459] FIG. **86** is an example of a circuit diagram showing interface circuits between two chips **700** and **800**. The two chips **700** and **800** can be any two of the previously described chips **120**, **130** and **140** illustrated in FIG. **52**, **54**, **55**, **66**, **67**, **74**, **83**, **84**, **85** or **104**. Alternatively, the two chips **700** and **800** can be any two of the previously described chips **120**, **130**, **140** and **160** illustrated in FIG. **72** or **73**. Alternatively, the two chips **700** and **800** can be any two of the below described chips **120**, **130** and **140** illustrated in FIG. **107**K, **107**L, **108**F or **109**T.

[0460] For example, while the chip **700** is one of the chips **120** shown in FIG. **52**, **54**, **55**, **66**, **67**, **72**, **73**, **74**, **83**, **84**, **104**, **107**K, **107**L, **108**F or **109**T, the chip **800** can be one of the chips **130** and **140** shown in FIG. **52**, **54**, **55**, **66**, **67**, **72**, **73**, **74**, **83**, **84**, **104**, **107**K, **107**L, **108**F or **109**T. Alternatively, while the chip **700** is one of the chips **120**, **130** and **140** shown in FIG. **72** or **73**, the chip **800** can be the chip **160** shown in FIG. **72** or **73**. Alternatively, while the chip **700** is one of the chips **120** shown in FIG. **52**, **54**, **55**, **66**, **67**, **72**, **73**, **74**, **83**, **84**, **104**, **107**K, **107**L, **108**F or **109**T, the chip **800** can be another one of the chips **120** shown in FIG. **52**, **54**, **55**, **66**, **67**, **72**, **73**, **74**, **83**, **84**, **104**, **107**K, **107**L, **108**F or **109**T. Alternatively, while the chip **700** is one of the chips **130** shown in FIG. **52**, **54**, **55**, **66**, **67**, **72**, **73**, **74**, **83**, **84**, **104**, **107**K, **107**L, **108**F or **109**T, the chip **800** can be another one of the chips **130** shown in FIG. **52**, **54**, **55**, **66**, **67**, **72**, **73**, **74**, **83**, **84**, **104**, **107**K, **107**L, **108**F or **109**T. Alternatively, while the chip **700** is one of the chips **140** shown in FIG. **52**, **54**, **55**, **66**, **67**, **72**, **73**, **74**, **83**, **84**, **85**, **104**, **107**K, **107**L, **108**F or **109**T, the chip **800** can be another one of the chips **140** shown in FIG. **52**, **54**, **55**, **66**, **67**, **72**, **73**, **74**, **83**, **84**, **85**, **104**, **107**K, **107**L, **108**F or **109**T.

[0461] If the chip **700** or **800** is a memory chip, such as static-random-access-memory (SRAM) chip or dynamic-random-access-memory (DRAM) chip, the chip **700** or **800** may have a memory size larger than 10 megabytes (MB), such as between 10 megabytes and 32 gigabytes, and preferably between 100 megabytes and 4 gigabytes.

[0462] Referring to FIG. **86**, the chip **700** may include two inter-chip circuits **200***a* and **200***b*, two internal circuits **200***c* and **200***d*, two off-chip circuits **57***a* and **57***b*, and two testing

interface circuits **333***a* and **333***b*. The chip **800** may include two inter-chip circuits **200***e* and **200***f*, two internal circuits **200***g* and **200***h*, two off-chip circuits **57***c* and **57***d*, and two testing interface circuits **333***c* and **333***d*. The chip **700** is connected to the chip **800** through multiple metal interconnects **350** (two of them are shown). The metal interconnects **350**, for example, may include the patterned metal layers **2**, **3**, **4** and **5** and the metal pillars or bumps **24**, **34** and **44** when the chip **700** is one of the chip **120** and the chip **800** is one of the chip **130**. Alternatively, the metal interconnects **350** may include the patterned metal layers **4**, **5**, **6** and **7** and the metal pillars or bumps **44**, **54** and **64** when the chip **700** is one of the chip **130** and the chip **800** is one of the chip **140**. Alternatively, the metal interconnects **350** may include the patterned metal layers **2**, **3**, **5**, **6** and **7** and the metal pillars or bumps **24**, **34**, **54** and **64** when the chip **700** is one of the chip **120** and the chip **800** is one of the chip **140**. Alternatively, the metal interconnects **350** may include the patterned metal layers **2** and **3** and the metal pillars or bumps **24** when the chips **700** and **800** are two of the chips **120**. Alternatively, the metal interconnects **350** may include the patterned metal layers **4** and **5** and the metal pillars or bumps **44** when the chips **700** and **800** are two of the chips **130**. Alternatively, the metal interconnects **350** may include the patterned metal layers **6** and **7** and the metal pillars or bumps **64** when the chips **700** and **800** are two of the chips **140**.

[0463] The inter-chip circuit **200***a* of the chip **700** may include an inter-chip buffer **701***a* and an inter-chip ESD (electro static discharge) circuit **701***b*. The inter-chip buffer **701***a* has a first node FN**1** and a second node SN**1**, and the inter-chip ESD circuit **701***b* has a node En connected to the first node FN**1**. The inter-chip buffer **701***a* can be an inter-chip receiver which can be an inverter composed of an NMOS transistor **751***a* and a PMOS transistor **751***b*. The gates of the NMOS transistor **751***a* and the PMOS transistor **751***b* serve as an input node that is the first node FN**1** of the inter-chip buffer **701***a*. The drains of the NMOS transistor **751***a* and the PMOS transistor **751***b* serve as an output node that is the second node SN**1** of the inter-chip buffer **701***a*.

[0464] Alternatively, the inter-chip buffer **701***a* can be a multi-stage cascade inter-chip receiver including several stages of inverters. For example, referring to FIG. **87**, the inter-chip buffer **701***a* can be a two-stage cascade inter-chip receiver. The first stage **584***a* of the two-stage cascade inter-chip receiver is an inverter composed of the NMOS transistor **751***a* and the PMOS transistor **751***b*, and the second stage **584***b* (the last stage) of the two-stage cascade inter-chip receiver is an inverter composed of an NMOS transistor **751***c* and a PMOS transistor **751***d*. The size of the NMOS transistor **751***c* is larger than that of the NMOS transistor **751***a*, and the size of the PMOS transistor **751***d* is larger than that of the PMOS transistor **751***b*. The gates of the NMOS transistor **751***a* and the PMOS transistor **751***b* serve as an input node that is the first node FN**1** of the inter-chip buffer **701***a*. The drains of the NMOS transistor **751***c* and the PMOS transistor **751***d* serve as an output node that is the second node SN**1** of the inter-chip buffer **701***a*. The drains of the NMOS transistor **751***a* and the PMOS transistor **751***b* are connected to the gates of the NMOS transistor **751***c* and the PMOS transistor **751***d*.

[0465] Referring to FIG. **86**, the inter-chip circuit **200***b* of the chip **700** may include an inter-chip buffer **702***a* and an inter-chip ESD (electro static discharge) circuit **702***b*. The inter-chip buffer **702***a* has a first node FN**2** and a second node SN**2**, and the inter-chip ESD circuit **702***b* has a node En connected to the second node SN**2**. The inter-chip buffer **702***a* can be an inter-chip driver which can be an inverter composed of an NMOS transistor **752***a* and a PMOS transistor **752***b*. The gates of the NMOS transistor **752***a* and the PMOS transistor **752***b* serve as an input node that is the first node FN**2** of the inter-chip buffer **702***a*. The drains of the NMOS transistor **752***a* and the PMOS transistor **752***b* serve as an output node that is the second node SN**2** of the inter-chip buffer **702***a*.

[0466] Alternatively, the inter-chip buffer **702***a* can be a multi-stage cascade inter-chip driver including several stages of inverters. For example, referring to FIG. **88**, the inter-chip buffer **702***a* can be a two-stage cascade inter-chip driver. The first stage **585***a* of the two-stage cascade inter-chip driver is an inverter composed of an NMOS transistor **752***c* and a PMOS transistor **752***d*, and the second stage **585***b* (the last stage) of the two-stage cascade inter-chip driver is an inverter composed of the NMOS transistor **752***a* and the PMOS transistor **752***b*. The size of the NMOS transistor **752***a* is larger than that of the NMOS transistor **752***c*, and the size of the PMOS transistor **752***b* is larger than that of the PMOS transistor **752***d*. The gates of the NMOS transistor **752***c* and the PMOS transistor **752***d* serve as an input node that is the first node FN**2** of the inter-chip buffer **702***a*. The drains of the NMOS transistor **752***a* and the PMOS transistor **752***b* serve as an output node that is the second node SN**2** of the inter-chip buffer **702***a*. The drains of the NMOS transistor **752***c* and the PMOS transistor **752***d* are connected to the gates of the NMOS transistor **752***a* and the PMOS transistor **752***b*.

[0467] Referring to FIG. **86**, the inter-chip circuit **200***e* of the chip **800** may include an inter-chip buffer **703***a* and an inter-chip ESD (electro static discharge) circuit **703***b*. The inter-chip buffer **703***a* has a first node FN**3** and a second node SN**3**, and the inter-chip ESD circuit **703***b* has a node En connected to the second node SN**3**. The inter-chip buffer **703***a* can be an inter-chip driver which can be an inverter composed of an NMOS transistor **753***a* and a PMOS transistor **753***b*. The gates of the NMOS transistor **753***a* and the PMOS transistor **753***b* serve as an input node that is the first node FN**3** of the inter-chip buffer **703***a*. The drains of the NMOS transistor **753***a* and the PMOS transistor **753***b* serve as an output node that is the second node SN**3** of the inter-chip buffer **703***a*.

[0468] Alternatively, the inter-chip buffer **703***a* can be a multi-stage cascade inter-chip driver including several stages of inverters. For example, referring to FIG. **89**, the inter-chip buffer **703***a* can be a two-stage cascade inter-chip driver. The first stage **586***a* of the two-stage cascade inter-chip driver is an inverter composed of an NMOS transistor **753***c* and a PMOS transistor **753***d*, and the second stage **586***b* (the last stage) of the two-stage cascade inter-chip driver is an inverter composed of the NMOS transistor **753***a* and the PMOS transistor **753***b*. The size of the NMOS transistor **753***a* is larger than that of the NMOS transistor **753***c*, and the size of the PMOS transistor **753***b* is larger than that of the PMOS transistor **753***d*. The gates of the NMOS transistor **753***c* and the PMOS transistor **753***d* serve as an input node that is the first node FN**3** of the inter-chip buffer **703***a*. The drains of the NMOS transistor **753***a* and the PMOS transistor **753***b* serve as an output node that is the second node SN**3** of the inter-chip buffer **703***a*. The drains of the NMOS transistor **753***c* and the PMOS transistor **753***d* are connected to the gates of the NMOS transistor **753***a* and the PMOS transistor **753***b*.

[0469] Referring to FIG. **86**, the inter-chip circuit **200***f* of the chip **800** may include an inter-chip buffer **704***a* and an inter-chip ESD (electro static discharge) circuit **704***b*. The

inter-chip buffer **704***a* has a first node FN**4** and a second node SN**4**, and the inter-chip ESD circuit **704***b* has a node En connected to the first node FN**4**. The inter-chip buffer **704***a* can be an inter-chip receiver which can be an inverter composed of an NMOS transistor **754***a* and a PMOS transistor **754***b*. The gates of the NMOS transistor **754***a* and the PMOS transistor **754***b* serve as an input node that is the first node FN**4** of the inter-chip buffer **704***a*. The drains of the NMOS transistor **754***a* and the PMOS transistor **754***b* serve as an output node that is the second node SN**4** of the inter-chip buffer **704***a*.

[0470] Alternatively, the inter-chip buffer **704***a* can be a multi-stage cascade inter-chip receiver including several stages of inverters. For example, referring to FIG. **90**, the inter-chip buffer **704***a* can be a two-stage cascade inter-chip receiver. The first stage **587***a* of the two-stage cascade inter-chip receiver is an inverter composed of the NMOS transistor **754***a* and the PMOS transistor **754***b*, and the second stage **587***b* (the last stage) of the two-stage cascade inter-chip receiver is an inverter composed of an NMOS transistor **754***c* and a PMOS transistor **754***d*. The size of the NMOS transistor **754***c* is larger than that of the NMOS transistor **754***a*, and the size of the PMOS transistor **754***d* is larger than that of the PMOS transistor **754***b*. The gates of the NMOS transistor **754***a* and the PMOS transistor **754***b* serve as an input node that is the first node FN**4** of the inter-chip buffer **704***a*. The drains of the NMOS transistor **754***c* and the PMOS transistor **754***d* serve as an output node that is the second node SN**4** of the inter-chip buffer **704***a*. The drains of the NMOS transistor **754***a* and the PMOS transistor **754***b* are connected to the gates of the NMOS transistor **754***c* and the PMOS transistor **754***d*.

[0471] Referring to FIG. **86**, the off-chip circuit **57***a* of the chip **700** may include an off-chip buffer **58***a* and an off-chip ESD (electro static discharge) circuit **59***a*. The off-chip buffer **58***a* has a first node FN**5** and a second node SN**5**, and the off-chip ESD circuit **59***a* has a node En connected to the first node FN**5**. The off-chip buffer **58***a* can be an off-chip receiver which can be an inverter composed of an NMOS transistor **4205** and a PMOS transistor **4206**. The gates of the NMOS transistor **4205** and the PMOS transistor **4206** serve as an input node that is the first node FN**5** of the off-chip buffer **58***a*. The drains of the NMOS transistor **4205** and the PMOS transistor **4206** serve as an output node that is the second node SN**5** of the off-chip buffer **58***a*.

[0472] Alternatively, the off-chip buffer **58***a* can be a multi-stage cascade off-chip receiver including several stages of inverters. For example, referring to FIG. **91**, the off-chip buffer **58***a* can be a two-stage cascade off-chip receiver. The first stage **425***a* of the two-stage cascade off-chip receiver is an inverter composed of the NMOS transistor **4205** and the PMOS transistor **4206**, and the second stage **425***b* (the last stage) of the two-stage cascade off-chip receiver is an inverter composed of an NMOS transistor **4207** and a PMOS transistor **4208**. The size of the NMOS transistor **4207** is larger than that of the NMOS transistor **4205**, and the size of the PMOS transistor **4208** is larger than that of the PMOS transistor **4206**. The gates of the NMOS transistor **4205** and the PMOS transistor **4206** serve as an input node that is the first node FN**5** of the off-chip buffer **58***a*. The drains of the NMOS transistor **4207** and the PMOS transistor **4208** serve as an output node that is the second node SN**5** of the off-chip buffer **58***a*. The drains of the NMOS transistor **4205** and the PMOS transistor **4206** are connected to the gates of the NMOS transistor **4207** and the PMOS transistor **4208**.

[0473] Referring to FIG. **86**, the off-chip circuit **57***b* of the chip **700** may include an off-chip buffer **58***b* and an off-chip ESD (electro static discharge) circuit **59***b*. The off-chip buffer **58***b* has a first node FN**6** and a second node SN**6**, and the off-chip ESD circuit **59***b* has a node En connected to the second node SN**6**. The off-chip buffer **58***b* can be an off-chip driver which can be an inverter composed of an NMOS transistor **4203** and a PMOS transistor **4204**. The gates of the NMOS transistor **4203** and the PMOS transistor **4204** serve as an input node that is the first node FN**6** of the off-chip buffer **58***b*, and the drains of the NMOS transistor **4203** and the PMOS transistor **4204** serve as an output node that is the second node SN**6** of the off-chip buffer **58***b*.

[0474] Alternatively, the off-chip buffer **58***b* can be a multi-stage cascade off-chip driver including several stages of inverters. For example, referring to FIG. **92**, the off-chip buffer **58***b* can be a two-stage cascade off-chip driver. The first stage **426***a* of the two-stage cascade off-chip driver is an inverter composed of an NMOS transistor **4201** and a PMOS transistor **4202**, and the second stage **426***b* (the last stage) of the two-stage cascade off-chip driver is an inverter composed of the NMOS transistor **4203** and the PMOS transistor **4204**. The size of the NMOS transistor **4203** is larger than that of the NMOS transistor **4201**, and the size of the PMOS transistor **4204** is larger than that of the PMOS transistor **4202**. The gates of the NMOS transistor **4201** and the PMOS transistor **4202** serve as an input node that is the first node FN**6** of the off-chip buffer **58***b*. The drains of the NMOS transistor **4203** and the PMOS transistor **4204** serve as an output node that is the second node SN**6** of the off-chip buffer **58***b*. The drains of the NMOS transistor **4201** and the PMOS transistor **4202** are connected to the gates of the NMOS transistor **4203** and the PMOS transistor **4204**.

[0475] Referring to FIG. **86**, the off-chip circuit **57***c* of the chip **800** may include an off-chip buffer **58***c* and an off-chip ESD (electro static discharge) circuit **59***c*. The off-chip buffer **58***c* has a first node FN**7** and a second node SN**7**, and the off-chip ESD circuit **59***c* has a node En connected to the second node SN**7**. The off-chip buffer **58***c* can be an off-chip driver which can be an inverter composed of an NMOS transistor **4303** and a PMOS transistor **4304**. The gates of the NMOS transistor **4303** and the PMOS transistor **4304** serve as an input node that is the first node FN**7** of the off-chip buffer **58***c*. The drains of the NMOS transistor **4303** and the PMOS transistor **4304** serve as an output node that is the second node SN**7** of the off-chip buffer **58***c*.

[0476] Alternatively, the off-chip buffer **58***c* can be a multi-stage cascade off-chip driver including several stages of inverters. For example, referring to FIG. **93**, the off-chip buffer **58***c* can be a two-stage cascade off-chip driver. The first stage **427***a* of the two-stage cascade off-chip driver is an inverter composed of an NMOS transistor **4301** and a PMOS transistor **4302**, and the second stage **427***b* (the last stage) of the two-stage cascade off-chip driver is an inverter composed of the NMOS transistor **4303** and the PMOS transistor **4304**. The size of the NMOS transistor **4303** is larger than that of the NMOS transistor **4301**, and the size of the PMOS transistor **4304** is larger than that of the PMOS transistor **4302**. The gates of the NMOS transistor **4301** and the PMOS transistor **4302** serve as an input node that is the first node FN**7** of the off-chip buffer **58***c*. The drains of the NMOS transistor **4303** and the PMOS transistor **4304** serve as an output node that is the second node SN**7** of the off-chip buffer **58***c*. The drains of

the NMOS transistor **4301** and the PMOS transistor **4302** are connected to the gates of the NMOS transistor **4303** and the PMOS transistor **4304**.

[0477] Referring to FIG. **86**, the off-chip circuit **57***d* of the chip **800** may include an off-chip buffer **58***d* and an off-chip ESD (electro static discharge) circuit **59***d*. The off-chip buffer **58***d* has a first node FN**8** and a second node SN**8**, and the off-chip ESD circuit **59***d* has a node En connected to the first node FN**8**. The off-chip buffer **58***d* can be an off-chip receiver which can be an inverter composed of an NMOS transistor **4305** and a PMOS transistor **4306**. The gates of the NMOS transistor **4305** and the PMOS transistor **4306** serve as an input node that is the first node FN**8** of the off-chip buffer **58***d*. The drains of the NMOS transistor **4305** and the PMOS transistor **4306** serve as an output node that is the second node SN**8** of the off-chip buffer **58***d*.

[0478] Alternatively, the off-chip buffer **58***d* can be a multi-stage cascade off-chip receiver including several stages of inverters. For example, referring to FIG. **94**, the off-chip buffer **58***d* can be a two-stage cascade off-chip receiver. The first stage **428***a* of the two-stage cascade off-chip receiver is an inverter composed of the NMOS transistor **4305** and the PMOS transistor **4306**, and the second stage **428***b* (the last stage) of the two-stage cascade off-chip receiver is an inverter composed of an NMOS transistor **4307** and a PMOS transistor **4308**. The size of the NMOS transistor **4307** is larger than that of the NMOS transistor **4305**, and the size of the PMOS transistor **4308** is larger than that of the PMOS transistor **4306**. The gates of the NMOS transistor **4305** and the PMOS transistor **4306** serve as an input node that is the first node FN**8** of the off-chip buffer **58***d*. The drains of the NMOS transistor **4307** and the PMOS transistor **4308** serve as an output node that is the second node SN**8** of the off-chip buffer **58***d*. The drains of the NMOS transistor **4305** and the PMOS transistor **4306** are connected to the gates of the NMOS transistor **4307** and the PMOS transistor **4308**.

[0479] FIG. **95** is another example of a circuit diagram showing interface circuits between the chips **700** and **800**. The circuit diagram shown in FIG. **95** is similar to that shown in FIG. **86** except that the inter-chip buffers **701***a*, **702***a*, **703***a* and **704***a* are designed with inter-chip tri-state buffers each including a tri-state driver and a tri-state receiver, instead of the inter-chip receivers and drivers, and the off-chip buffers **58***a*, **58***b*, **58***c* and **58***d* are designed with off-chip tri-state buffers each including a tri-state driver and a tri-state receiver, instead of the off-chip receivers and drivers. In FIG. **95**, the inter-chip buffer **701***a* of the chip **700** can be an inter-chip tri-state buffer having a first I/O (input/output) node serving as the first node FN**1** of the inter-chip buffer **701***a*, and having a second I/O node serving as the second node SN**1** of the inter-chip buffer **701***a*. The inter-chip buffer **702***a* of the chip **700** can be an inter-chip tri-state buffer having a first I/O node serving as the first node FN**2** of the inter-chip buffer **702***a*, and having a second I/O node serving as the second node SN**2** of the inter-chip buffer **702***a*. The inter-chip buffer **703***a* of the chip **800** can be an inter-chip tri-state buffer having a first I/O node serving as the first node FN**3** of the inter-chip buffer **703***a*, and having a second I/O node serving as the second node SN**3** of the inter-chip buffer **703***a*. The inter-chip buffer **704***a* of the chip **800** can be an inter-chip tri-state buffer having a first I/O node serving as the first node FN**4** of the inter-chip buffer **704***a*, and having a second I/O node serving as the second node SN**4** of the inter-chip buffer **704***a*. The off-chip buffer **58***a* of the chip **700** can be an off-chip tri-state buffer having a first I/O node serving as the first node FN**5** of the off-chip buffer **58***a*, and having a second I/O node serving as the second node SN**5** of the off-chip buffer **58***a*. The off-chip buffer **58***b* of the chip **700** can be an off-chip tri-state buffer having a first I/O node serving as the first node FN**6** of the off-chip buffer **58***b*, and having a second I/O node serving as the second node SN**6** of the off-chip buffer **58***b*. The off-chip buffer **58***c* of the chip **800** can be an off-chip tri-state buffer having a first I/O node serving as the first node FN**7** of the off-chip buffer **58***c*, and having a second I/O node serving as the second node SN**7** of the off-chip buffer **58***c*. The off-chip buffer **58***d* of the chip **800** can be an off-chip tri-state buffer having a first I/O node serving as the first node FN**8** of the off-chip buffer **58***d*, and having a second I/O node serving as the second node SN**8** of the off-chip buffer **58***d*.

[0480] Referring to FIG. **86** or **95**, each of the internal circuits **200***c*, **200***d*, **200***g* and **200***h* can be a NOR gate, a NAND gate, an AND gate, an OR gate, an operational amplifier, a flash memory cell, a static-random-access-memory (SRAM) cell, a dynamic-random-access-memory (DRAM) cell, a non-volatile memory cell, an erasable programmable read-only memory (EPROM) cell, a read-only memory (ROM) cell, a magnetic random access memory (MRAM) cell, a sense amplifier, an analog-to-digital (A/D) converter, a digital-to-analog (D/A) converter, an inverter, an adder, a multiplexer, a diplexer, a multiplier, a complementary-metal-oxide-semiconductor (CMOS) device, a bi-polar CMOS device, a bipolar circuit or an analog circuit. Each of the internal circuits **200***c*, **200***d*, **200***g* and **200***h* may include a NMOS transistor (n-type metal-oxide-semiconductor transistor) having a ratio of a physical channel width thereof to a physical channel length thereof ranging from, e.g., about 0.1 and 20, ranging from, e.g., about 0.1 and 10 or ranging from, e.g., about 0.2 and 2. Alternatively, each of the internal circuits **200***c*, **200***d*, **200***g* and **200***h* may include a PMOS transistor (p-type metal-oxide-semiconductor transistor) having a ratio of a physical channel width thereof to a physical channel length thereof ranging from, e.g., about 0.2 and 40, ranging from, e.g., about 0.2 and 20 or ranging from, e.g., about 0.4 and 4. Each of the inter-chip ESD circuits **701***b*, **702***b*, **703***b* and **704***b* and each of the off-chip ESD circuits **59***a*, **59***b*, **59***c* and **59***d* may include one or more ESD (electro static discharge) units each composed of two reverse-biased diodes or of a PMOS transistor and an NMOS transistor.

[0481] The first node FN**1** of the inter-chip buffer **701***a* can be connected to the node En of the inter-chip ESD circuit **701***b*, to a first terminal F**1** of the testing interface circuit **333***a* through a metal interconnect **740***b* of the chip **700**, and to a metal trace or pad **170***a* of the chip **700** through the metal interconnect **740***b*. The metal trace or pad **170***a* is connected to a metal trace or pad **180***a* of the chip **800** through one of the metal interconnects **350**. The second node SN**1** of the inter-chip buffer **701***a* can be connected to the internal circuit **200***c* through a metal interconnect **740***a* of the chip **700**.

[0482] The first node FN**2** of the inter-chip buffer **702***a* can be connected to the internal circuit **200***d* through a metal interconnect **740***c* of the chip **700**. The second node SN**2** of the inter-chip buffer **702***a* can be connected to the node En of the inter-chip ESD circuit **702***b*, to a first terminal F**2** of the testing interface circuit **333***b* through a metal interconnect **740***d* of the chip **700**, and to a metal trace or pad **170***b* of the chip **700** through the metal interconnect **740***d*. The metal

trace or pad **170***b* is connected to a metal trace or pad **180***b* of the chip **800** through another one of the metal interconnects **350**.

[0483] The first node FN**3** of the inter-chip buffer **703***a* can be connected to the internal circuit **200***g* through a metal interconnect **740***e* of the chip **800**. The second node SN**3** of the inter-chip buffer **703***a* can be connected to the node En of the inter-chip ESD circuit **703***b*, to a first terminal F**3** of the testing interface circuit **333***c* through a metal interconnect **740***f* of the chip **800**, and to the metal pad or trace **180***a* of the chip **800** through the metal interconnect **740***f*.

[0484] The first node FN**4** of the inter-chip buffer **704***a* can be connected to the node En of the inter-chip ESD circuit **704***b*, to a first terminal F**4** of the testing interface circuit **333***d* through a metal interconnect **740***h* of the chip **800**, and to the metal trace or pad **180***b* of the chip **800** through the metal interconnect **740***h*. The second node SN**4** of the inter-chip buffer **704***a* can be connected to the internal circuit **200***h* through a metal interconnect line **740***g* of the chip **800**.

[0485] The first node FN**5** of the off-chip buffer **58***a* can be connected to the node En of the off-chip ESD circuit **59***a*, and to a metal trace or pad **170***c* of the chip **700** through a metal interconnect **740***j* of the chip **700**. The second node SN**5** of the off-chip buffer **58***a* can be connected to a second terminal S**1** of the testing interface circuit **333***a* through a metal interconnect **740***i* of the chip **700**.

[0486] The first node FN**6** of the off-chip buffer **58***b* can be connected to a second terminal S**2** of the testing interface circuit **333***b* through a metal interconnect **740***k* of the chip **700**. The second node SN**6** of the off-chip buffer **58***b* can be connected to the node En of the off-chip ESD circuit **59***b*, and to a metal trace or pad **170***d* of the chip **700** through a metal interconnect **740***m* of the chip **700**.

[0487] The first node FN**7** of the off-chip buffer **58***c* can be connected to a second terminal S**3** of the testing interface circuit **333***c* through a metal interconnect **740***n* of the chip **800**. The second node SN**7** of the off-chip buffer **58***c* can be connected to the node En of the off-chip ESD circuit **59***c*, and to a metal trace or pad **180***c* of the chip **800** through a metal interconnect **740***p* of the chip **800**.

[0488] The first node FN**8** of the off-chip buffer **58***d* can be connected to the node En of the off-chip ESD circuit **59***d*, and to a metal trace or pad **180***d* of the chip **800** through a metal interconnect **740***r* of the chip **800**.

[0489] The four metal traces or pads **170***a*-**170***d* of the chip **700** can be four of the metal traces or pads **26** of one of the chips **120** shown in FIG. **52**, **54**, **55**, **66**, **67**, **72**, **73**, **74**, **83**, **84**, **104**, **107**K, **107**L, **108**F or **109**T, and the four metal traces or pads **180***a*-**180***d* of the chip **800** can be four of the metal traces or pads **26** of another one of the chips **120** shown in FIG. **52**, **54**, **55**, **66**, **67**, **72**, **73**, **74**, **83**, **84**, **104**, **107**K, **107**L, **108**F or **109**T, can be four of the metal traces or pads **46** of one of the chips **130** shown in FIG. **52**, **54**, **55**, **66**, **67**, **72**, **73**, **74**, **83**, **84**, **104**, **107**K, **107**L, **108**F or **109**T, or can be four of the metal traces or pads **66** of one of the chips **140** shown in FIG. **52**, **54**, **55**, **66**, **67**, **72**, **73**, **74**, **83**, **84**, **104**, **107**K, **107**L, **108**F or **109**T. Alternatively, the four metal traces or pads **170***a*-**170***d* of the chip **700** can be four of the metal traces or pads **46** of one of the chips **130** shown in FIG. **52**, **54**, **55**, **66**, **67**, **72**, **73**, **74**, **83**, **84**, **104**, **107**K, **107**L, **108**F or **109**T, and the four metal traces or pads **180***a*-**180***d* of the chip **800** can be four of the metal traces or pads **46** of another one of the chips **130** shown in FIG. **52**, **54**, **55**, **66**, **67**, **72**, **73**, **74**, **83**, **84**, **104**, **107**K, **107**L, **108**F or **109**T. Alternatively, the four metal traces or pads **170***a*-**170***d* of the chip **700** can be four of the metal traces or pads **66** of one of the chips **140** shown in FIG. **52**, **54**, **55**, **66**, **67**, **72**, **73**, **74**, **83**, **84**, **85**, **104**, **107**K, **107**L, **108**F or **109**T, and the four metal traces or pads **180***a*-**180***d* of the chip **800** can be four of the metal traces or pads **66** of another one of the chips **140** shown in FIG. **52**, **54**, **55**, **66**, **67**, **72**, **73**, **74**, **83**, **84**, **85**, **104**, **107**K, **107**L, **108**F or **109**T. Alternatively, the four metal traces or pads **180***a*-**180***d* of the chip **800** can be four of the metal traces or pads **163** of the chip **160** shown in FIG. **72** or **73**, and the four metal traces or pads **170***a*-**170***d* of the chip **700** can be four of the metal traces or pads **26** of one of the chips **120** shown in FIG. **72** or **73**, four of the metal traces or pads **46** of one of the chips **130** shown in FIG. **72** or **73**, or four of the metal traces or pads **66** of one of the chips **140** shown in FIG. **72** or **73**.

[0490] The metal traces or pads **170***a*-**170***d* and **180***a*-**180***d* may include aluminum or electroplated copper. The metal traces or pads **170***c*, **170***d*, **180***c* and **180***d*, for example, can be connected to an external circuit, such as mother board, printed circuit board, metal substrate, glass substrate or ceramic substrate, through the solder bumps or balls **29***a* shown in FIG. **52**, **55**, **66**, **72**, **83** or **84**, through the solder bumps or balls **845** shown in FIG. **104** or through the metal pillars or bumps **39** shown in FIG. **54**, **67** or **73**. Alternatively, the metal traces or pads **170***c*, **170***d*, **180***c* and **180***d* can be connected to the ball-grid-array (BGA) substrate **810** shown in FIG. **74** through the wirebonded wires **830** shown in FIG. **74**. Alternatively, the metal traces or pads **170***c*, **170***d*, **180***c* and **180***d* can be connected to the circuit board **999** shown in FIG. **85** through the solder bumps **650** shown in FIG. **85**.

[0491] The small inter-chip buffer **701***a* or **702***a*, such as inter-chip driver, inter-chip receiver or inter-chip tri-state buffer, may be designed just like an internal buffer, such as internal driver, internal receiver or internal tri-state buffer, respectively, used for long interconnection within the chip **700**, that is, the long interconnection connects multiple transistors in long distance within the chip **700**. The small inter-chip buffer **703***a* or **704***a*, such as inter-chip driver, inter-chip receiver or inter-chip tri-state buffer, may be designed just like an internal buffer, such as internal driver, internal receiver or internal tri-state buffer, respectively, used for long interconnection within the chip **800**, that is, the long interconnection connects multiple transistors in long distance within the chip **800**. The small inter-chip buffers **701***a*, **702***a*, **703***a* and **704***a* may be designed on both the chip **700** and the chip **800** for a signal, clock, power or ground connection between the chip **800** and the chip **700**. The number of inter-chip buffers including the inter-chip buffers **701***a* and **702***a* on the chip **700** may be equal to or more than, e.g., 512, and preferably equal to or more than, e.g., 1024. The number of inter-chip buffers including the inter-chip buffers **703***a* and **704***a* on the chip **800** may be equal to or more than, e.g., 512, and preferably equal to or more than, e.g., 1024.

[0492] The large off-chip buffers **58***a*, **58***b*, **58***c* and **58***d*, such as off-chip drivers, off-chip receivers or off-chip tri-sate buffers, are designed on both the chip **700** and the chip **800** for circuit testing and/or for signal, clock, power or ground connection, for example, to a mother board, a printed circuit board, a metal substrate, a glass substrate or a ceramic substrate through the solder bumps or balls **29***a* shown in FIG. **52**, **55**, **66**, **72**, **83** or **84**, or through the metal pillars or bumps **39** shown in FIG. **54**, **67** or **73**, to the ball-grid-array (BGA) substrate **810** shown in FIG. **74** through the wirebonded wires **830** shown in FIG. **74**, or to the circuit board **999** shown in

FIG. **85** through the solder bumps **650** shown in FIG. **85**. The testing circuit is either (i) the wafer level testing performed before the chip **700** or **800** is sawed or diced apart from a wafer, or (ii) the package level testing (the final testing) after the chips **700** and **800** are connected to each other.

[0493] The testing interface circuits **333***a* and **333***b* are designed on the chip **700**, and the testing interface circuits **333***c* and **333***d* are designed on the chip **800**. The output capacitance at the first terminal F**1** or F**4** of the testing interface circuit **333***a* or **333***d* shown in FIG. **86** as seen from the inter-chip buffer **701***a* or **704***a* is less than 2 pF, exemplary less than 1 pF or less than 0.2 pF. The output loading capacitance of the first terminal F**1** or F**4** of the testing interface circuit **333***a* or **333***d* shown in FIG. **86** is less than 2 pF, exemplary less than 1 pF or less than 0.2 pF. The input capacitance at the first terminal F**2** or F**3** of the testing interface circuit **333***b* or **333***c* shown in FIG. **86** as seen from the inter-chip buffer **702***a* or **703***a* is less than 2 pF, exemplary less than 1 pF or less than 0.2 pF. The input loading capacitance of the first terminal F**2** or F**3** of the testing interface circuit **333***b* or **333***c* shown in FIG. **86** is less than 2 pF, exemplary less than 1 pF or less than 0.2 pF. The input or output capacitance at the first terminal F**1**, F**2**, F**3** or F**4** of the testing interface circuit **333***a*, **333***b*, **333***c* or **333***d* shown in FIG. **95** as seen from the inter-chip buffer **701***a*, **702***a*, **703***a* or **704***a* is less than 2 pF, exemplary less than 1 pF or less than 0.2 pF. The input or output loading capacitance of the first terminal F**1**, F**2**, F**3** or F**4** of the testing interface circuit **333***a*, **333***b*, **333***c* or **333***d* shown in FIG. **95** is less than 2 pF, exemplary less than 1 pF or less than 0.2 pF. Each of the test interface circuits **333***a*, **333***b*, **333***c* and **333***d* shown in FIG. **86** or **95** can be a scan test circuit, and the scan test circuit can be used for scan testing performed at the wafer level testing, via the metal traces or pads **170***a*-**170***d* and **180***a*-**180***d* connecting with testing probes, before the chip **700** or **800** is sawed or diced apart from a wafer or at the package level testing (the final testing) after the chips **700** and **800** are connected to each other. The scan test circuit is used to test flip flops by input the scan-in signal or output the scan-out signal.

[0494] Referring to FIG. **86** or **95**, the metal interconnects **350** can be used for clock lines or interconnects, or for signal lines or interconnects, such as bit lines, bit interconnects, address lines or address interconnects.

[0495] The total number of bit lines or bit interconnects, provided by two of the metal interconnects **350**, in parallel data communication between the chips **700** and **800** can be two, for example, as shown in FIG. **86** or **95**. In this case, the bit width of the parallel data communication between the chips **700** and **800** is two. Alternatively, the total number of the bit lines or bit interconnects, provided by the metal interconnects **350**, in parallel data communication between the chips **700** and **800** can be equal to or more than 4, 8, 16, 32, 64, 128, 256, 512 or 1024; that means the bit width of the parallel data communication can be equal to or more than 4, 8, 16, 32, 64, 128, 256, 512 or 1024. Note that, in these alternatives, only two bit lines or bit interconnects **350** (and their corresponding inter-chip buffers **701***a*, **702***a*, **703***a* and **704***a*) are shown in FIG. **86** or **95**, and other bit lines or bit interconnects (and their corresponding inter-chip buffers) are not shown in FIG. **86** or **95**, but they (and their corresponding inter-chip buffers) are designed as same as the two bit lines or bit interconnects **350** (and their corresponding inter-chip buffers **701***a*, **702***a*, **703***a* and **704***a*) shown in FIG. **86** or **95**. Each of the metal interconnects **350** used for the bit lines or bit interconnects connects one of the inter-chip buffers **701***a* and **702***a* of the chip **700** to one of the inter-chip buffers **703***a* and **704***a* of the chip **800**. As an example of a case of bit width of 1024, there are 1024 inter-chip buffers, such as **701***a* or **702***a*, of the chip **700**, connected to 1024 bit lines or bit interconnects, such as 350, and then connected to 1024 inter-chip buffers, such as **703***a* or **704***a*, of the chip **800**. Accordingly, the total number of the inter-chip buffers **701***a* and **702***a* connected with the bit lines or bit interconnects **350** in parallel data communication between the chips **700** and **800** is equal to the total number of the bit lines or bit interconnects **350**, and is also equal to the total number of the inter-chip buffers **703***a* and **703***a* connected with the bit lines or bit interconnects **350**. The data communication of the bit lines or bit interconnects, provided by the metal interconnects **350**, between the chips **700** and **800** may have a data bit width equal to or more than e.g., **2**, **4**, **8**, **16**, **32**, **64**, **128**, **256**, **512** or **1024**, and preferably equal to or more than 512 or 1024.

[0496] Referring to FIG. **86** or **95**, the small inter-chip ESD circuits **701***b*, **702***b*, **703***b* and **704***b* are used for the small inter-chip buffers **701***a*, **702***a*, **703***a* and **704***a* between the chips **700** and **800** for electrostatic charge protection during the chip packaging or assembly manufacturing process. Alternatively, no ESD circuit can be required for the small inter-chip buffers **701***a*, **702***a*, **703***a* and **704***a* between the chips **700** and **800**, that is, the inter-chip ESD circuits **701***b*, **702***b*, **703***b* and **704***b* can be omitted. In other words, there is no ESD circuit connected to the metal interconnects **740***b*, **740***d*, **740***f* and **740***h*.

[0497] The large off-chip ESD circuits **59***a*, **59***b*, **59***c* and **59***d* required for the large off-chip buffers **58***a*, **58***b*, **58***c*, and **58***d* are designed on both the chip **700** and the chip **800** for the circuit testing and/or for signal, clock, power or ground connection, for example, to a mother board, a printed circuit board, a metal substrate, a glass substrate or a ceramic substrate through the solder bumps or balls **29***a* shown in FIG. **52**, **55**, **66**, **72**, **83** or **84**, or through the metal pillars or bumps **39** shown in FIG. **54**, **67** or **73**, to the ball-grid-array (BGA) substrate **810** shown in FIG. **74** through the wirebonded wires **830** shown in FIG. **74**, or to the circuit board **999** shown in FIG. **85** through the solder bumps **650** shown in FIG. **85**. The circuit testing is either (i) the wafer level testing performed before the chip **700** or **800** is sawed or diced apart from a wafer, or (ii) the package level testing (the final testing) after the chips **700** and **800** are connected to each other. The large off-chip ESD circuits **59***a*, **59***b*, **59***c* and **59***d* are used for electrostatic charge protection during the circuit testing, such as the wafer level testing or the package level testing (the final testing).

[0498] The size of the small inter-chip ESD circuit **701***b*, **702***b*, **703***b* or **704***b* can be less than the size of the large off-chip ESD circuit **59***a*, **59***b*, **59***c* or **59***d*, respectively. For example, the size of the inter-chip ESD circuit **701***b*, **702***b*, **703***b* or **704***b* can be defined as the loading or capacitance of the inter-chip ESD circuit **701***b*, **702***b*, **703***b* or **704***b*, and the size of the off-chip ESD circuit **59***a*, **59***b*, **59***c* or **59***d* can be defined as the loading or capacitance of the off-chip ESD circuit **59***a*, **59***b*, **59***c* or **59***d*. In a case, each of the small inter-chip ESD circuits **701***b*, **702***b*, **703***b* and **704***b* has a size (loading or capacitance) less than 2 pF (pico Farads), such as between 0.01 and 2 pF, exemplary less than 0.5 pF, such as between 0.01 and 0.5 pF, and each of the large off-chip ESD circuits **59***a*, **59***b*, **59***c* and **59***d* has a size (loading or capacitance) larger than 2 pF, such as between 2 and 100 pF, exem-

plary larger than 5 pF, such as between 5 and 100 pF. In another case, each of the small inter-chip ESD circuits **701***b*, **702***b*, **703***b* and **704***b* has a size (loading or capacitance) less than 1 pF, such as between 0.01 and 1 pF, and each of the large off-chip ESD circuits **59***a*, **59***b*, **59***c* and **59***d* has a size (loading or capacitance) larger than 1 pF, such as between 1 and 100 pF.

[0499] Alternatively, the size of the small inter-chip ESD circuit **701***b*, **702***b*, **703***b* or **704***b* or the size of the large off-chip ESD circuit **59***a*, **59***b*, **59***c* or **59***d* can be defined as below. An ESD (electro static discharge) circuit, such as the inter-chip ESD circuit **701***b*, **702***b*, **703***b* or **704***b* or the off-chip ESD circuit **59***a*, **59***b*, **59***c* or **59***d*, may include one or more ESD units, and each of the ESD units may include a P^+ active region and an N^+ active region connected to the P^+ active region and connected to an I/O (input/output) metal pad or testing metal pad of a chip, such as the metal pad **170***a*, **170***b*, **170***c*, **170***d*, **180***a*, **180***b*, **180***c* or **180***d* shown in FIG. **86** or **95**. The area of the P^+ active region plus the area of the N^+ active region equals the active area of each of the ESD units. The total of the active areas of the ESD units equals the active area of the ESD circuit. If the ESD circuit is composed of only one ESD unit, the active area of the ESD circuit equals the active area of the only one ESD unit. If the ESD circuit is composed of multiple ESD units, the active area of the ESD circuit equals the total of the active areas of the ESD units connected in parallel. The active area of the ESD circuit can be used to define the size of the ESD circuit. FIGS. **96-101** show how to calculate the active area of an ESD unit of a chip and define the size of an ESD circuit composed of one or more the ESD units.

[0500] Referring to FIG. **96**, an electro static discharge (ESD) unit **759** of a chip can be composed of two reverse-biased diodes **5931** and **5932**. FIG. **98** shows a cross-sectional view of the ESD unit **759** shown in FIG. **96**, and FIG. **99** is a top perspective view showing the topography of the ESD unit **759** derived from the top surface Z-Z' of a p-type silicon substrate **401** shown in FIG. **98**.

[0501] Referring to FIGS. **96**, **98** and **99**, the ESD unit **759** includes two P^+ active regions **757***a* and **757***b* and two N^+ active regions **758***a* and **758***b*. The P^+ active region **757***a* is in an N-well **755** in the p-type silicon substrate **401**, and the N^+ active region **758***a* is in the p-type silicon substrate **401**. The P^+ active region **757***a* is connected to an I/O metal pad or testing metal pad of the chip, such as the metal pad **170***a*, **170***b*, **170***c* or **170***d* of the chip **700** shown in FIG. **86** or **95** or the metal pad **180***a*, **180***b*, **180***c* or **180***d* of the chip **800** shown in FIG. **86** or **95**, through a metal interconnect **753***a* of the chip. The N^+ active region **758***a* is connected to the P^+ active region **757***a* and to the I/O metal pad or the testing metal pad of the chip through the metal interconnect **753***a*. The metal interconnect **753***a* includes a fine-line metal layer **660***a* formed on a dielectric layer **330** over the p-type silicon substrate **401**, a first via plug **661** formed on a contact region **754***a* of the P^+ active region **757***a* and in the dielectric layer **330**, and a second via plug **661** formed on a contact region **754***b* of the N^+ active region **758***a* and in the dielectric layer **330**. The P^+ active region **757***b* is in the p-type silicon substrate **401**, and the N^+ active region **758***b* is in the N-well **755** in the p-type silicon substrate **401**. The P^+ active region **757***b* is connected to a ground bus through a metal interconnect **753***b*, and the N^+ active region **758***b* is connected to a power bus through a metal interconnect **753***c*. The metal interconnect **753***b* contains a fine-line metal layer **660** formed on the dielectric layer **330** over the p-type silicon substrate **401**, and a via plug **661** formed on a contact region **754***c* of the P^+ active region **757***b* and in the dielectric layer **330**. The metal interconnect **753***c* contains a fine-line metal layer **660***c* formed on the dielectric layer **330** over the p-type silicon substrate **401**, and a via plug **661** formed on a contact region **754***d* of the N^+ active region **758***b* and in the dielectric layer **330**.

[0502] Referring to FIG. **99**, the P^+ active region **757***a*, connected to the I/O metal pad or testing metal pad of the chip, has an area AR**1**, from a top view, enclosed by a field oxide **752** in the p-type silicon substrate **401**. The N^+ active region **758***a*, connected to the I/O metal pad or testing metal pad of the chip, has an area AR**2**, from a top view, enclosed by the field oxide **752** in the p-type silicon substrate **401**. The active area of the ESD unit **759** equals the area AR**1** plus the area AR**2**.

[0503] Alternatively, referring to FIG. **97**, the ESD unit **759** of the chip can be composed of a PMOS transistor **681** and an NMOS transistor **682**. FIG. **100** shows a cross-sectional view of the ESD unit **759** shown in FIG. **97**, and FIG. **101** is a top perspective view showing the topography of the ESD unit **759** derived from the top surface Z-Z' of the p-type silicon substrate **401** shown in FIG. **100**.

[0504] Referring to FIGS. **97**, **100** and **101**, the PMOS transistor **681** of the ESD unit **759** includes a gate **751***a* and two P^+ active regions **757***a* and **757***c* at two opposite sides of the gate **751***a*, and the NMOS transistor **682** of the ESD unit **759** includes a gate **751***b* and two N^+ active regions **758***a* and **758***c* at two opposite sides of the gate **751***b*. The P^+ active region **757***a* is in an N-well **755** in the p-type silicon substrate **401**, and the N^+ active region **758***a* is in the p-type silicon substrate **401**. The P^+ active region **757***a* is connected to an I/O metal pad or testing metal pad of the chip, such as the metal pad **170***a*, **170***b*, **170***c* or **170***d* of the chip **700** shown in FIG. **86** or **95** or the metal pad **180***a*, **180***b*, **180***c* or **180***d* of the chip **800** shown in FIG. **86** or **95**, through a metal interconnect **753***a* of the chip. The N^+ active region **758***a* is connected to the P^+ active region **757***a* and to the I/O metal pad or the testing metal pad of the chip through the metal interconnect **753***a*. The metal interconnect **753***a* contains a fine-line metal layer **660***a* formed on a dielectric layer **330** over the p-type silicon substrate **401**, a first via plug **661** formed on a contact region **754***a* of the P^+ active region **757***a* and in the dielectric layer **330**, and a second via plug **661** formed on a contact region **754***b* of the N^+ active region **758***a* and in the dielectric layer **330**. The P^+ active region **757***b* is in the p-type silicon substrate **401**, and the N^+ active region **758***b* is in the N-well **755** in the p-type silicon substrate **401**. The P^+ active region **757***c* is in the N-well **755** in the p-type silicon substrate **401**, and the N^+ active region **758***c* is in the p-type silicon substrate **401**. The N^+ active region **758***c* is connected to a ground bus of the chip through a metal interconnect **753***b* of the chip and to the P^+ active region **757***b* through the metal interconnect **753***b*, and the P^+ active region **757***b* is connected to the ground bus through the metal interconnect **753***b*. The P^+ active region **757***c* is connected to a power bus of the chip through a metal interconnect **753***c* of the chip and to the N^+ active region **758***b* through the metal interconnect **753***c*, and the N^+ active region **758***b* is connected to the power bus through the metal interconnect **753***c*. The metal interconnect **753***b* contains a fine-line metal layer **660***b* formed on the dielectric layer **330** over the p-type silicon substrate **401**, a first via plug **661** formed on a contact region **754***c* of the P^+ active region **757***b* and in the dielectric layer **330**, and a second via plug **661** formed on a

contact region **754***e* of the N^+ active region **758***c* and in the dielectric layer **330**. The metal interconnect **753***c* contains a fine-line metal layer **660***c* formed on the dielectric layer **330** over the p-type silicon substrate **401**, a first via plug **661** formed on a contact region **754***d* of the N^+ active region **758***b*, and a second via plug **661** formed on a contact region **754***f* of the P^+ active region **757***c*. The gate **751***a* has a contact region **754***g* connected to the power bus of the chip and to the contact regions **754***d* and **754***f* through the metal interconnect **753***c*. The gate **751***b* has a contact region **754***h* connected to the ground bus of the chip and to the contact regions **754***c* and **754***e* through the metal interconnect **753***b*.

[0505] Referring to FIG. **101**, the P^+ active region **757***a*, connected to the I/O metal pad or testing metal pad of the chip, has an area AR**3**, from a top view, enclosed by the boundary defined by a sidewall **748** of the gate **751***a* and the border between a field oxide **752** and the P^+ active region **757***a*. The N^+ active region **758***a*, connected to the I/O metal pad or testing metal pad of the chip, has an area AR**4**, from a top view, enclosed by the boundary defined by a sidewall **749** of the gate **751***b* and the border between the field oxide **752** and the N^+ active region **758***a*. The active area of the ESD unit **759** equals the area AR**3** plus the area AR**4**.

[0506] Based on the previously described definition or calculation illustrated in FIGS. **96-101**, the active area of each of ESD units of an ESD circuit can be calculated, and the total of active areas of the ESD units equals the active area of the ESD circuit. If the ESD circuit is composed of only one ESD unit, the active area of the ESD circuit equals the active area of the only one ESD unit. If the ESD circuit is composed of multiple ESD units, the active area of the ESD circuit equals the total of the active areas of the ESD units connected in parallel.

[0507] Accordingly, the active area of each of the inter-chip ESD circuits **701***b*, **702***b*, **703***b* and **704***b* and the active area of each of the off-chip ESD circuits **59***a*, **59***b*, **59***c* and **59***d* can be calculated. For example, the small inter-chip ESD circuit **701***b*, **702***b*, **703***b* or **704***b* may have an active area less than 1300 square millimeters, such as between 6.5 and 1300 square millimeters, exemplary less than 325 square millimeters, such as between 6.5 and 325 square millimeters, and the large off-chip ESD circuit **59***a*, **59***b*, **59***c* or **59***d* may have an active area larger than 1300 square millimeters, such as between 1300 and 65,000 square millimeters, exemplary larger than 3250 square millimeters, such as between 3250 and 65,000 square millimeters. Alternatively, the small inter-chip ESD circuit **701***b*, **702***b*, **703***b* or **704***b* may have an active area less than 650 square millimeters, and the large off-chip ESD circuit **59***a*, **59***b*, **59***c* or **59***d* may have an active area larger than 650 square millimeters.

[0508] The size of the large off-chip ESD circuit **59***a* of the chip **700**, defined as the total of the active areas of the one or more ESD units in the large off-chip ESD circuit **59***a* or the loading or capacitance of the large off-chip ESD circuit **59***a*, can be larger than the size of the small inter-chip ESD circuit **701***b* of the chip **700**, defined as the total of the active areas of the one or more ESD units in the small inter-chip ESD circuit **701***b* or the loading or capacitance of the small inter-chip ESD circuit **701***b*, by more than 3 times, 10 times, 25 times or 50 times, such as between 3 and 50 times.

[0509] The size of the large off-chip ESD circuit **59***b* of the chip **700**, defined as the total of the active regions of the one or more ESD units in the large off-chip ESD circuit **59***b* or the loading or capacitance of the large off-chip ESD circuit **59***b*, can be larger than the size of the small inter-chip ESD circuit **702***b* of the chip **700**, defined as the total of the active regions of the one or more ESD units in the small inter-chip ESD circuit **702***b* or the loading or capacitance of the small inter-chip ESD circuit **702***b*, by more than 3 times, 10 times, 25 times or 50 times, such as between 3 and 50 times.

[0510] The size of the large off-chip ESD circuit **59***c* of the chip **800** defined as the total of the active regions of the one or more ESD units in the large off-chip ESD circuit **59***c* or the loading or capacitance of the large off-chip ESD circuit **59***c*, can be larger than the size of the small inter-chip ESD circuit **703***b* of the chip **800**, defined as the total of the active regions of the one or more ESD units in the small inter-chip ESD circuit **703***b* or the loading or capacitance of the small inter-chip ESD circuit **703***b*, by more than 3 times, 10 times, 25 times or 50 times, such as between 3 and 50 times.

[0511] The size of the large off-chip ESD circuit **59***d* of the chip **800** defined as the total of the active regions of the one or more ESD units in the large off-chip ESD circuit **59***d* or the loading or capacitance of the large off-chip ESD circuit **59***d*, can be larger than the size of the small inter-chip ESD circuit **704***b* of the chip **800**, defined as the total of the active regions of the one or more ESD units in the small inter-chip ESD circuit **704***b* or the loading or capacitance of the small inter-chip ESD circuit **704***b*, by more than 3 times, 10 times, 25 times or 50 times, such as between 3 and 50 times.

[0512] Referring to FIG. **86**, the size of the inter-chip buffer **702***a* or **703***a* can be characterized by the load or loading of the inter-chip buffer **702***a* or **703***a*. The load or loading of the inter-chip buffer **702***a* or **703***a* is total equivalent capacitance load of the inter-chip buffer **702***a* or **703***a*. The load or loading (capacitance) of the inter-chip buffer **702***a* or **703***a*, such as the load or loading (capacitance) of the last stage inverter **585***b* or **586***b*, with drains of the NMOS transistor **752***a* or **753***a* and the PMOS transistor **752***b* or **753***b* connected to the metal pad **170***b* or **180***a*, of the two-stage cascade inter-chip driver shown in FIG. **88** or **89**, can be less than 10 pF, such as between 0.01 pF and 10 pF or between 0.1 pF and 5 pF, less than 2 pF, such as between 0.001 pF and 2 pF, or less than 1 pF, such as between 0.01 pF and 1 pF. The size of the inter-chip buffer **701***a* or **704***a* can be characterized by an input capacitance (loading) of the inter-chip buffer **701***a* or **704***a*, and the input capacitance (loading) of the inter-chip buffer **701***a* or **704***a* may be less than 10 pF, such as between 0.01 pF and 10 pF or between 0.1 pF and 5 pF, less than 2 pF, such as between 0.001 pF and 2 pF, or less than 1 pF, such as between 0.01 pF and 1 pF.

[0513] Referring to FIG. **95**, the size of the inter-chip buffer **701***a*, **702***a*, **703***a* or **704***a* can be characterized by the load or loading of the inter-chip buffer **701***a*, **702***a*, **703***a* or **704***a*. The load or loading of the inter-chip buffer **701***a*, **702***a*, **703***a* or **704***a* is total equivalent capacitance load of the inter-chip buffer **701***a*, **702***a*, **703***a* or **704***a*. The load or loading (capacitance) of the inter-chip buffer **701***a*, **702***a*, **703***a* or **704***a*, such as the load or loading (capacitance) of a last stage tri-state driver, with drains of an NMOS transistor and a PMOS transistor connected to the metal pad **170***a*, **170***b*, **180***a* or **180***b*, of a multi-stage cascade tri-state buffer, can be less than 10 pF, such as between 0.01 pF and 10 pF or between 0.1 pF and 5 pF, less than 2 pF, such as between 0.001 pF and 2 pF, or less than 1 pF, such as between 0.01 pF and 1 pF.

[0514] Referring to FIG. **86**, the size of the off-chip buffer **58***b* or **58***c* can be characterized by the load or loading of the off-chip buffer **58***b* or **58***c*. The load or loading of the off-chip buffer **58***b* or **58***c* is total equivalent capacitance load of the

off-chip buffer **58***b* or **58***c*. The load or loading (capacitance) of the off-chip buffer **58***b* or **58***c*, such as the load or loading (capacitance) of the last stage driver **426***b* or **427***b*, with drains of the NMOS transistor **4203** or **4303** and the PMOS transistor **4204** or **4304** connected to the metal pad **170***d* or **180***c*, of the multi-stage cascade off-chip driver shown in FIG. **92** or **93**, can be larger than 10 pF, such as between 10 pF and 100 pF, larger than 2 pF, such as between 2 and 100 pF, or larger than 1 pF, such as between 1 pF and 100 pF. The size of the off-chip buffer **58***a* or **58***d* can be characterized by an input capacitance (loading) of the off-chip buffer **58***a* or **58***d*, and the input capacitance (loading) of the off-chip buffer **58***a* or **58***d* may be larger than 10 pF, such as between 10 pF and 100 pF, larger than 2 pF, such as between 2 and 100 pF, or larger than 1 pF, such as between 1 pF and 100 pF.

[0515] Referring to FIG. **95**, the size of the off-chip buffer **58***a*, **58***b*, **58***c* or **58***d* can be characterized by the load or loading of the off-chip buffer **58***a*, **58***b*, **58***c* or **58***d*. The load or loading of the off-chip buffer **58***a*, **58***b*, **58***c* or **58***d* is total equivalent capacitance load of the off-chip buffer **58***a*, **58***b*, **58***c* or **58***d*. The load or loading (capacitance) of the off-chip buffer **58***a*, **58***b*, **58***c* or **58***d*, such as the load or loading (capacitance) of a last stage tri-state driver, with drains of an NMOS transistor and a PMOS transistor connected to the metal pad **170***c*, **170***d*, **180***c* or **180***d*, of a multi-stage cascade tri-state buffer, can be larger than 10 pF, such as between 10 pF and 100 pF, larger than 2 pF, such as between 2 and 100 pF, or larger than 1 pF, such as between 1 pF and 100 pF.

[0516] The load or loading (capacitance) of the off-chip buffer **58***b* shown in FIG. **86** or **95** is larger than the load or loading (capacitance) of the inter-chip buffer **702***a* shown in FIG. **86** or **95** by more than 3 times, 10 times, 25 times or 50 times, such as between 3 and 100 times. The load or loading (capacitance) of the off-chip buffer **58***c* shown in FIG. **86** or **95** is larger than the load or loading (capacitance) of the inter-chip buffer **703***a* shown in FIG. **86** or **95** by more than 3 times, 10 times, 25 times or 50 times, such as between 3 and 100 times.

[0517] Referring to FIG. **86** or **95**, the size of the inter-chip buffer **702***a* or **703***a* can be characterized by a peak drive current of the inter-chip buffer **702***a* or **703***a*, and the size of the off-chip buffer **58***b* or **58***c* can be characterized by a peak drive current of the off-chip buffer **58***b* or **58***c*. The peak drive current of the off-chip buffer **58***b* or **58***c* is larger than the peak drive current of the inter-chip buffer **702***a* or **703***a* by more than 3 times, 10 times, 25 times or 50 times, such as between 3 and 100 times.

[0518] For example, regarding to the inter-chip buffer **702***a* shown in FIG. **86**, when the PMOS transistor **752***b* is on and the NMOS transistor **752***a* is off, the previously described load or loading driven by the inter-chip buffer **702***a* is charged with a charging current. When the NMOS transistor **752***a* is on and the PMOS transistor **752***b* is off, the load or loading the previously described load or loading driven by the inter-chip buffer **702***a* is discharged with a discharging current. The peak charging or discharging current (a function of bias-voltages) of the NMOS transistor **752***a* or PMOS transistor **752***b* can be used to define the peak drive current of the inter-chip buffer **702***a*. Regarding to the off-chip buffer **58***b* shown in FIG. **86**, when the PMOS transistor **4204** is on and the NMOS transistor **4203** is off, the previously described load or loading driven by the off-chip buffer **58***b* is charged with a charging current. When the NMOS transistor **4203** is on and the PMOS transistor **4204** is off, the previously described load or loading driven by the off-chip buffer **58***b* is discharged with a discharging current. The peak charging or discharging current (a function of bias-voltages) of the NMOS transistor **4203** or PMOS transistor **4204** can be used to define the peak drive current of the off-chip buffer **58***b*. The peak drive current of the off-chip buffer **58***b* is larger than the peak drive current of the inter-chip buffer **702***a* by more than 3 times, 10 times, 25 times or 50 times, such as between 3 and 100 times.

[0519] Referring to FIG. **86** or **95**, the size of the inter-chip buffer **702***a* or **703***a* can be characterized by an on-resistance of a transistor in the last stage driver of the inter-chip buffer **702***a* or **703***a*, and the size of the off-chip buffer **58***b* or **58***c* can be characterized by an on-resistance of a transistor in the last stage driver of the off-chip buffer **58***b* or **58***c*. The on-resistance of the off-chip buffer **58***b* or **58***c* is larger than the on-resistance of the inter-chip buffer **702***a* or **703***a* by more than 3 times, 10 times, 25 times or 50 times, such as between 3 and 100 times.

[0520] For example, regarding to the inter-chip buffer **702***a* shown in FIG. **86**, when the PMOS transistor **752***b* is on and the NMOS transistor **752***a* is off, the previously described load or loading driven by the inter-chip buffer **702***a* is charged, and the PMOS transistor **752***b* is equivalent to a resister with an on-resistance. When the NMOS transistor **752***a* is on and the PMOS transistor **752***b* is off, the previously described load or loading driven by the inter-chip buffer **702***a* is discharged, and the NMOS transistor **752***a* is equivalent to a resister with resistance of an on-resistance. The on-resistance (a function of bias-voltages) of the NMOS transistor **752***a* or PMOS transistor **752***b* can be used to characterize the size of the inter-chip buffer **702***a*. Regarding to the off-chip buffer **58***b* shown in FIG. **86**, when the PMOS transistor **4204** is on and the NMOS transistor **4203** is off, the previously described load or loading driven by the off-chip buffer **58***b* is charged, and the PMOS transistor **4204** is equivalent to a resister with an on-resistance. When the NMOS transistor **4203** is on and the PMOS transistor **4204** is off, the previously described load or loading driven by the off-chip buffer **58***b* is discharged, and the NMOS transistor **4203** is equivalent to a resister with an on-resistance. The on-resistance (a function of bias-voltages) of the NMOS transistor **4203** or PMOS transistor **4204** can be used to characterize the size of the off-chip buffer **58***b*.

[0521] Referring to FIG. **86** or **95**, the size of the inter-chip buffer **701***a*, **702***a*, **703***a* or **704***a* or the size of the off-chip buffer **58***a*, **58***b*, **58***c* or **58***d* can be characterized by a ratio of a physical channel width to a physical channel length of an NMOS transistor or PMOS transistor. FIG. **102** or **103** shows how to define or calculate a physical channel width and a physical channel length of an NMOS transistor or PMOS transistor.

[0522] FIG. **102** or **103** shows a top view of a MOS transistor (metal-oxide-semiconductor transistor) that can be a PMOS transistor or an NMOS transistor. Referring to FIG. **102**, a MOS transistor of a chip includes an active region **600**, diffusion region, in a semiconductor substrate of the chip, a field oxide region **602** in the semiconductor substrate and around the active region **600**, a gate **604** on the field oxide region **602** and across the active region **600**, and a gate oxide (not shown) between the active region **600** and the gate **604**. The active region **600** can be defined as a source **606** at a side of the gate **604**, and a drain **608** at the other side of the gate **604**. The material of the gate **604** may be poly silicon, metal

silicide or composite layer of above materials, and the metal silicide may be NiSi, CoS, $TiSi_2$ or WSi. Alternatively, the material of the gate **604** may be a metal, such as W, WN, TiN, Ta, TaN, Mo, or alloy or composite layer of above materials. The material of the gate oxide may be silicon oxide or high k oxide, such as Hf containing oxide. The Hf containing oxide may be HfO_2, HfSiON or HfSiO. The reference mark of W is defined as the physical channel width of the MOS transistor, the length of the gate **604** crossing over the diffusion region **600**; the reference mark of L is defined as the physical channel length of the MOS transistor, the width of the gate **604** over the diffusion region **600**.

[0523] Referring to FIG. **103**, alternatively, a MOS transistor may include a gate **604** with multiple portions $\mathbf{604}_1$-$\mathbf{604}_n$ over one or more diffusion regions **600**. The reference marks of W_1-W_n are defined as the physical channel width of each portion $\mathbf{604}_1$-$\mathbf{604}_n$ of the gate **604**, the length of each portion $\mathbf{604}_1$-$\mathbf{604}_n$ of the gate **604** crossing over the diffusion region (s) **600**; the reference mark of L is defined as the physical channel length of one of the portions $\mathbf{604}_1$-$\mathbf{604}_n$ of the gate **604**, the width of one of the portions $\mathbf{604}_1$-$\mathbf{604}_n$ of the gate **604** over the diffusion region(s) **600**. In this case, the physical channel width of the MOS transistor is the summation of the physical channel widths W_1-W_n of each portions $\mathbf{604}_1$-$\mathbf{604}_n$ of the gate **604**, and the physical channel length of the MOS transistor is the physical channel length L of one of the portions $\mathbf{604}_1$-$\mathbf{604}_n$ of the gate **604**.

[0524] Accordingly, the definition of the physical channel width and physical channel length of the MOS transistor as illustrated in FIG. **102** or **103** can be applicable to various features/structures described herein.

[0525] The size of the inter-chip buffer **702***a* shown in FIG. **86** can be characterized by a ratio of a physical channel width to a physical channel length of the NMOS transistor **752***a* or PMOS transistor **752***b*. As shown, the drains of the NMOS transistor **752***a* and the PMOS transistor **752***b* can be connected to the metal pad **170***b* of the chip **700** through the metal interconnect line **740***d*. If the inter-chip buffer **702***a* is the two-stage cascade inter-chip driver shown in FIG. **88**, the size of the inter-chip buffer **702***a* can be characterized by the ratio of the physical channel width to the physical channel length of the NMOS transistor **752***a* or PMOS transistor **752***b* in the last stage driver **585***b*, and the drains of the NMOS transistor **752***a* and the PMOS transistor **752***b* are connected to the metal pad **170***b* of the chip **700** through the metal interconnect **740***d*. The ratio of the physical channel width to the physical channel length of the NMOS transistor **752***a* can be, e.g., between 1 and 50, and in exemplary embodiments the ratio can be between 1 and 20. The ratio of the physical channel width to the physical channel length of the PMOS transistor **752***b* can be a suitable value, e.g., between 1 and 100, in exemplary embodiments the ratio can be between 1 and 40.

[0526] The size of the inter-chip buffer **703***a* shown in FIG. **86** can be characterized by a ratio of a physical channel width to a physical channel length of the NMOS transistor **753***a* or PMOS transistor **753***b*. As shown, the drains of the NMOS transistor **753***a* and the PMOS transistor **753***b* can be connected to the metal pad **180***a* of the chip **800** through the metal interconnect **740***f*. If the inter-chip buffer **703***a* is the two-stage cascade inter-chip driver shown in FIG. **89**, the size of the inter-chip buffer **703***a* can be characterized by the ratio of the physical channel width to the physical channel length of the NMOS transistor **753***a* or PMOS transistor **753***b* in the last stage driver **586***b*, and the drains of the NMOS transistor **753***a* and the PMOS transistor **753***b* are connected to the metal pad **180***a* of the chip **800** through the metal interconnect **740***f*. The ratio of the physical channel width to the physical channel length of the NMOS transistor **753***a* can be, e.g., between 1 and 50, and in exemplary embodiments, the ratio can be between 1 and 20. The ratio of the physical channel width to the physical channel length of the PMOS transistor **753***b* can be, e.g., between 1 and 100, and in exemplary embodiments, the ratio can be between 1 and 40.

[0527] The size of the off-chip buffer **58***b* shown in FIG. **86** can be characterized by a ratio of a physical channel width to a physical channel length of the NMOS transistor **4203** or PMOS transistor **4204**. As shown, the drains of the NMOS transistor **4203** and the PMOS transistor **4204** can be connected to the metal pad **170***d* of the chip **700** through the metal interconnect **740***m*. If the off-chip buffer **58***b* is the two-stage cascade off-chip driver shown in FIG. **92**, the size of the off-chip buffer **58***b* can be characterized by the ratio of the physical channel width to the physical channel length of the NMOS transistor **4203** or PMOS transistor **4204** in the last stage driver **426***b*, and the drains of the NMOS transistor **4203** and the PMOS transistor **4204** are connected to the metal pad **170***d* of the chip **700** through the metal interconnect **740***m*. The ratio of the physical channel width to the physical channel length of the NMOS transistor **4203** can be, e.g., larger than 30, such as between 30 and 20,000, and in exemplary embodiments the ratio can be larger than 50, such as between 50 and 300. The ratio of the physical channel width to the physical channel length of the PMOS transistor **4204** can be, e.g., larger than 60, such as between 60 and 40,000, and in exemplary embodiments the ratio can be larger than 100, such as between 100 and 600. For exemplary embodiments, the ratio of the physical channel width to the physical channel length of the NMOS transistor **4203** may be larger than the ratio of the physical channel width to the physical channel length of the NMOS transistor **752***a* by, e.g., more than 3 times, 10 times, 25 times or 50 times, such as between 3 and 100 times. Moreover, for exemplary embodiments, the ratio of the physical channel width to the physical channel length of the PMOS transistor **4204** may be larger than the ratio of the physical channel width to the physical channel length of the PMOS transistor **752***b* by, e.g., more than 3 times, 10 times, 25 times or 50 times, such as between 3 and 100 times.

[0528] The size of the off-chip buffer **58***c* shown in FIG. **86** can be characterized by a ratio of a physical channel width to a physical channel length of the NMOS transistor **4303** or PMOS transistor **4304**. As shown, the drains of the NMOS transistor **4303** and the PMOS transistor **4304** can be connected to the metal pad **180***c* of the chip **800** through the metal interconnect **740***p*. If the off-chip buffer **58***c* is the two-stage cascade off-chip driver shown in FIG. **93**, the size of the off-chip buffer **58***c* can be characterized by the ratio of the physical channel width to the physical channel length of the NMOS transistor **4303** or PMOS transistor **4304** in the last stage driver **427***b*, and the drains of the NMOS transistor **4303** and the PMOS transistor **4304** are connected to the metal pad **180***c* of the chip **800** through the metal interconnect **740***p*. The ratio of the physical channel width to the physical channel length of the NMOS transistor **4303** can be, e.g., larger than 30, such as between 30 and 20,000, and in exemplary embodiments the ratio can be larger than 50, such as between 50 and 300. The ratio of the physical channel width to the physical channel length of the PMOS transistor **4304** can be, e.g., larger than 60, such as between 60 and 40,000, and in exem-

plary embodiments the ratio can be larger than 100, such as between 100 and 600. The ratio of the physical channel width to the physical channel length of the NMOS transistor **4303** may be larger than the ratio of the physical channel width to the physical channel length of the NMOS transistor **753***a* by, e.g., more than 3 times, 10 times, 25 times or 50 times, such as between 3 and 100 times. The ratio of the physical channel width to the physical channel length of the PMOS transistor **4304** may be larger than the ratio of the physical channel width to the physical channel length of the PMOS transistor **753***b* by, e.g., more than 3 times, 10 times, 25 times or 50 times, such as between 3 and 100 times.

[0529] The size of the inter-chip buffer **701***a* or **702***a* shown in FIG. **95** can be characterized by a ratio of a physical channel width to a physical channel length of an NMOS transistor or PMOS transistor of the tri-state driver of the inter-chip tri-state buffer. As shown, the tri-state driver can be connected to the metal pad **170***a* or **170***b* of the chip **700** through the metal interconnect **740***b* or **740***d*. The ratio of the physical channel width to the physical channel length of the NMOS transistor of the tri-state driver can be, e.g., between 1 and 50, and in exemplary embodiments between 1 and 20. The ratio of the physical channel width to the physical channel length of the PMOS transistor of the tri-state driver can be, e.g., between 1 and 100, and in exemplary embodiments between 1 and 40.

[0530] If the inter-chip buffer **701***a* or **702***a* shown in FIG. **95** is a multi-stage tri-state buffer, the size of the inter-chip buffer **701***a* or **702***a* can be characterized by a ratio of a physical channel width to a physical channel length of an NMOS transistor or PMOS transistor in the last stage tri-state driver of the multi-stage tri-state buffer. As shown, the last stage tri-state driver can be connected to the metal pad **170***a* or **170***b* of the chip **700** through the metal interconnect **740***b* or **740***d*. The ratio of the physical channel width to the physical channel length of the NMOS transistor of the last stage tri-state driver can be, for example, between 1 and 50, and in exemplary embodiments the ratio can be between 1 and 20. The ratio of the physical channel width to the physical channel length of the PMOS transistor of the last stage tri-state driver can be between 1 and 100, and in exemplary embodiments the ratio can be between 1 and 40.

[0531] The size of the inter-chip buffer **703***a* or **704***a* shown in FIG. **95** can be characterized by a ratio of a physical channel width to a physical channel length of an NMOS transistor or PMOS transistor of the tri-state driver of the inter-chip tri-state buffer. As shown, the tri-state driver can be connected to the metal pad **180***a* or **180***b* of the chip **800** through the metal interconnect **740***f* or **740***h*. The ratio of the physical channel width to the physical channel length of the NMOS transistor of the tri-state driver is between 1 and 50, and in exemplary embodiments between 1 and 20. The ratio of the physical channel width to the physical channel length of the PMOS transistor of the tri-state driver is between 1 and 100, and in exemplary embodiments can be between 1 and 40.

[0532] If the inter-chip buffer **703***a* or **704***a* shown in FIG. **95** is a multi-stage tri-state buffer, the size of the inter-chip buffer **703***a* or **704***a* can be characterized by a ratio of a physical channel width to a physical channel length of an NMOS transistor or PMOS transistor in the last stage tri-state driver of the multi-stage tri-state buffer. As shown, the last stage tri-state driver can be connected to the metal pad **180***a* or **180***b* of the chip **800** through the metal interconnect **740***f* or **740***h*. The ratio of the physical channel width to the physical channel length of the NMOS transistor of the last stage tri-state driver can be, e.g., between 1 and 50, and in exemplary embodiments can be between 1 and 20. The ratio of the physical channel width to the physical channel length of the PMOS transistor of the last stage tri-state driver can be, e.g., between 1 and 100, and in exemplary embodiments can be between 1 and 40.

[0533] The size of the off-chip buffer **58***a* or **58***b* shown in FIG. **95** can be characterized by a ratio of a physical channel width to a physical channel length of an NMOS transistor or PMOS transistor of a tri-state driver of the off-chip tri-state buffer. As shown, the tri-state driver can be connected to the metal pad **170***c* or **170***d* of the chip **700** through the metal interconnect **740***j* or **740***m*. The ratio of the physical channel width to the physical channel length of the NMOS transistor of the tri-state driver can be, e.g., larger than 30, such as between 30 and 20,000, and in exemplary embodiments the ratio can be larger than 50, such as between 50 and 300. The ratio of the physical channel width to the physical channel length of the PMOS transistor of the tri-state driver can be, e.g., larger than 60, such as between 60 and 40,000, and in exemplary embodiments can be larger than 100, such as between 100 and 600.

[0534] If the off-chip buffer **58***a* or **58***b* shown in FIG. **95** is a multi-stage tri-state buffer, the size of the off-chip buffer **58***a* or **58***b* can be characterized by a ratio of a physical channel width to a physical channel length of an NMOS transistor or PMOS transistor in the last stage tri-state driver of the multi-stage tri-state buffer. As shown, the last stage tri-state driver can be connected to the metal pad **170***c* or **170***d* of the chip **700** through the metal interconnect **740***j* or **740***m*. The ratio of the physical channel width to the physical channel length of the NMOS transistor of the last stage tri-state driver can be, for example, larger than 30, such as between 30 and 20,000, and in exemplary embodiments the ratio can be larger than 50, such as between 50 and **300**. The ratio of the physical channel width to the physical channel length of the PMOS transistor of the last stage tri-state driver can be larger than 60, such as between 60 and 40,000, and in exemplary embodiments can be larger than 100, such as between 100 and 600.

[0535] The ratio of the physical channel width to the physical channel length of the NMOS transistor of the tri-state driver (at the last stage) of the off-chip tri-state buffer **58***a* or **58***b* shown in FIG. **95** may be larger than the ratio of the physical channel width to the physical channel length of the NMOS transistor of the tri-state driver (at the last stage) of the inter-chip tri-state buffer **701***a* or **702***a* shown in FIG. **95** by, e.g., more than 3 times, 10 times, 25 times or 50 times, such as between 3 and 100 times. The ratio of the physical channel width to the physical channel length of the PMOS transistor of the tri-state driver (at the last stage) of the off-chip tri-state buffer **58***a* or **58***b* shown in FIG. **95** may be larger than the ratio of the physical channel width to the physical channel length of the PMOS transistor of the tri-state driver (at the last stage) of the inter-chip tri-state buffer **701***a* or **702***a* shown in FIG. **95** by, e.g., more than 3 times, 10 times, 25 times or 50 times, such as between 3 and 100 times.

[0536] The size of the off-chip buffer **58***c* or **58***d* shown in FIG. **95** can be characterized by a ratio of a physical channel width to a physical channel length of an NMOS transistor or PMOS transistor of a tri-state driver of the off-chip tri-state buffer. As shown, the tri-state driver can be connected to the metal pad **180***c* or **180***d* of the chip **800** through the metal

interconnect **740***p* or **740***r*. The ratio of the physical channel width to the physical channel length of the NMOS transistor of the tri-state driver can be, e.g., larger than 30, such as between 30 and 20,000, and in exemplary embodiments can be larger than 50, such as between 50 and 300. The ratio of the physical channel width to the physical channel length of the PMOS transistor of the tri-state driver can be, e.g., larger than 60, such as between 60 and 40,000, and in exemplary embodiments the ratio can be larger than 100, such as between 100 and 600.

[0537] If the off-chip buffer **58***c* or **58***d* shown in FIG. **95** is a multi-stage tri-state buffer, the size of the off-chip buffer **58***c* or **58***d* can be characterized by a ratio of a physical channel width to a physical channel length of an NMOS transistor or PMOS transistor in the last stage tri-state driver of the multi-stage tri-state buffer. As shown, the last stage tri-state driver can be connected to the metal pad **180***c* or **180***d* of the chip **800** through the metal interconnect **740***p* or **740***r*. The ratio of the physical channel width to the physical channel length of the NMOS transistor of the last stage tri-state driver can be, e.g., larger than 30, such as between 30 and 20,000, and in exemplary embodiments the ratio can be larger than 50, such as between 50 and 300. The ratio of the physical channel width to the physical channel length of the PMOS transistor of the last stage tri-state driver can be, e.g., larger than 60, such as between 60 and 40,000, and in exemplary embodiments can be larger than 100, such as between 100 and 600.

[0538] The ratio of the physical channel width to the physical channel length of the NMOS transistor of the tri-state driver (at the last stage) of the off-chip tri-state buffer **58***c* or **58***d* shown in FIG. **95** may be larger than the ratio of the physical channel width to the physical channel length of the NMOS transistor of the tri-state driver (at the last stage) of the inter-chip tri-state buffer **703***a* or **704***a* shown in FIG. **95** by, e.g., more than 3 times, 10 times, 25 times or 50 times, such as between 3 and 100 times. The ratio of the physical channel width to the physical channel length of the PMOS transistor of the tri-state driver (at the last stage) of the off-chip tri-state buffer **58***c* or **58***d* shown in FIG. **95** may be larger than the ratio of the physical channel width to the physical channel length of the PMOS transistor of the tri-state driver (at the last stage) of the inter-chip tri-state buffer **703***a* or **704***a* shown in FIG. **95** by, e.g., more than 3 times, 10 times, 25 times or 50 times, such as between 3 and 100 times.

[0539] Referring to FIG. **110**A, alternatively, the internal circuit **200***c* of the chip **700** can be connected to the second node SN**5** of the off-chip buffer **58***a* through the metal interconnect **740***a* of the chip **700** without passing through any inter-chip circuit and any testing interface circuit of the chip **700**. The internal circuit **200***g* of the chip **800** can be connected to the first node FN**7** of the off-chip buffer **58***c* through the metal interconnect **740***e* of the chip **800** without passing through any inter-chip circuit and any testing interface circuit of the chip **800**. Comparing to the circuit diagram of FIG. **86**, the inter-chip circuits **200***a* and **200***e* and the testing interface circuits **333***a* and **333***c* as shown in FIG. **86** can be omitted. The element in FIG. **110**A indicated by a some reference number as indicates the element in FIG. **86** has a same material and spec as the element illustrated in FIG. **86**.

[0540] Referring to FIG. **110**B, alternatively, the internal circuit **200***c* of the chip **700** can be connected to the second node SN**5** of the off-chip buffer **58***a* through the metal interconnect **740***a* of the chip **700** without passing through any inter-chip circuit and any testing interface circuit of the chip **700**. The internal circuit **200***g* of the chip **800** can be connected to the first node FN**7** of the off-chip buffer **58***c* through the metal interconnect **740***e* of the chip **800** without passing through any inter-chip circuit and any testing interface circuit of the chip **800**. Comparing to the circuit diagram of FIG. **95**, the inter-chip circuits **200***a* and **200***e* and the testing interface circuits **333***a* and **333***c* as shown in FIG. **95** can be omitted. The element in FIG. **110**B indicated by a same reference number as indicates the elements in FIGS. **86** and **95** has a same material and spec as the element illustrated in FIGS. **86** and **95**.

[0541] FIG. **105** shows a schematic top perspective view of a chip. The circuit design of the chip **900** can be applied to any one of the chips **120**, **130** and **140**. The chip **900** includes a shared-memory circuit block **901** and multiple circuit blocks **902**, **903** and **904**.

[0542] The shared-memory circuit block **901** can be a statistic-random-access-memory circuit block, for example, having a memory size between 256 kilobytes and 16 megabytes. Alternatively, the shared-memory circuit block **901** can be a dynamic-random-access-memory circuit block, for example, having a memory size between 1 megabyte and 256 megabytes.

[0543] Any one of the circuit blocks **902**, **903** and **904** can be a central-processing-unit (CPU) circuit block, a graphics-processing-unit (GPU) circuit block, a digital-signal-processing (DSP) circuit block, a baseband circuit block, a wireless local area network (WLAN) circuit block, a logic circuit block, an analog circuit block, a global-positioning-system (GPS) circuit block, a Bluetooth circuit block, a radio frequency (RF) circuit block, or a modem circuit block. For instance, the circuit block **902** can be a central-processing-unit (CPU) circuit block, the circuit block **903** can be a graphics-processing-unit (GPU) circuit block, and the circuit block **904** can be another central-processing-unit (CPU) circuit block, another graphics-processing-unit (GPU) circuit block, a digital-signal-processing (DSP) circuit block, a baseband circuit block, a wireless local area network (WLAN) circuit block, a logic circuit block, an analog circuit block, a global-positioning-system (GPS) circuit block, a Bluetooth circuit block, a radio frequency (RF) circuit block or a modem circuit block.

[0544] The chip **900** also includes multiple metal interconnects or traces **171-175**, **181-185** and **191-195** over a passivation layer of the chip **900**, and multiple metal pillars or bumps **922** on the metal interconnects or traces **171-175**, **181-185** and **191-195**. In case the circuit design of the chip **900** is applied to any one of the chips **120** shown in FIG. **8**, **52**, **54**, **55**, **66**, **67**, **72**, **73**, **74**, **83**, **84**, **107**K or **107**L, the metal interconnects or traces **171-175**, **181-185** and **191-195** as designed in the chip **900** can be provided by the patterned metal layer **2** and the metal pillars or bumps **922** as designed in the chip **900** can be the metal pillars or bumps **24**. In case the circuit design of the chip **900** is applied to any one of the chips **130** shown in FIG. **19**, **52**, **54**, **55**, **66**, **67**, **72**, **73**, **74**, **83**, **84**, **107**K, **107**L, **108**F or **109**T, the metal interconnects or traces **171-175**, **181-185** and **191-195** as designed in the chip **900** can be provided by the patterned metal layer **4** and the metal pillars or bumps **922** as designed in the chip **900** can be the metal pillars or bumps **44**. In case the circuit design of the chip **900** is applied to any one of the chips **140** shown in FIG. **29**, **52**, **54**, **55**, **66**, **67**, **72**, **73**, **74**, **83**, **84**, **85**, **107**K, **107**L, **108**F or **109**T, the metal interconnects or traces **171-175**, **181-185** and **191-195** as designed in the chip **900** can be provided by

the patterned metal layer **6** and the metal pillars or bumps **922** as designed in the chip **900** can be the metal pillars or bumps **64**.

[0545] The shared-memory circuit block **901** can be connected to the circuit blocks **902**, **903** and **904** through the metal interconnects or traces **171-175**. The metal interconnects or traces **171-175** can include multiple power interconnects, planes, buses or traces **171** and **175** (two of them are shown), multiple shared signal interconnects, buses or traces **172** (one of them is shown), multiple ground interconnects, planes, buses or traces **173** (one of them is shown), and multiple clock interconnects, buses or traces **174** (one of them is shown). The shared signal interconnects, buses or traces **172** may include multiple shared bit lines or interconnects, and multiple shared address lines or interconnects. The metal interconnects or traces **171-175** can be connected to the shared-memory circuit block **901** and the circuit blocks **902**, **903** and **904** through some of openings **921** in the passivation layer of the chip **900**.

[0546] The circuit block **902** can be connected to the circuit block **903** through the metal interconnects or traces **181-185**. The metal interconnects or traces **181-185** can include multiple power interconnects, planes, buses or traces **181** and **185** (two of them are shown), multiple signal interconnects, buses or traces **182** (one of them is shown), multiple ground interconnects, planes, buses or traces **183** (one of them is shown), and multiple clock interconnects, buses or traces **184** (one of them is shown). The signal interconnects, buses or traces **182** may include multiple bit lines or bit interconnects. The metal interconnects or traces **181-185** can be connected to the circuit blocks **902** and **903** through some of the openings **921** in the passivation layer of the chip **900**.

[0547] The circuit block **904** can be connected to the circuit blocks **902** and **903** through the metal interconnects or traces **191-195**. The metal interconnects or traces **191-195** can include multiple power interconnects, planes, buses or traces **191** and **195** (two of them are shown), multiple shared signal interconnects, buses or traces **192** (one of them is shown), multiple ground interconnects, planes, buses or traces **193** (one of them is shown), and multiple clock interconnects, buses or traces **194** (one of them is shown). The shared signal interconnects, buses or traces **192** may include multiple bit lines or bit interconnects. The metal interconnects or traces **191-195** can be connected to the circuit blocks **902**, **903** and **904** through some of the openings **921** in the passivation layer of the chip **900**.

[0548] Data can be transmitted from the circuit blocks **902**, **903** and **904** to the shared-memory circuit block **901** through the shared signal interconnects, buses or traces **172**, for example, having a data bit width equal to or more than 16, equal to or more than 32, equal to or more than 64, equal to or more than 128, equal to or more than 512, or between 16 and 128. Data can be transmitted from the shared-memory circuit block **901** to the circuit blocks **902**, **903** and **904** through the shared signal interconnects, buses or traces **172**, for example, having a data bit width equal to or more than 16, equal to or more than 32, equal to or more than 64, equal to or more than 128, equal to or more than 512, or between 16 and 128. For example, when the signal paths in the shared signal buses between the shared-memory circuit block **901** and the circuit block **902** are turned on, the signal paths in the shared signal buses between the shared-memory circuit block **901** and the circuit block **903** and the signal paths in the shared signal buses between the shared-memory circuit block **901** and the circuit block **904** are turned off. Alternatively, when the signal paths in the shared signal buses between the shared-memory circuit block **901** and the circuit block **903** are turned on, the signal paths in the shared signal buses between the shared-memory circuit block **901** and the circuit block **902** and the signal paths in the shared signal buses between the shared-memory circuit block **901** and the circuit block **904** are turned off. Alternatively, when the signal paths in the shared signal buses between the shared-memory circuit block **901** and the circuit block **904** are turned on, the signal paths in the shared signal buses between the shared-memory circuit block **901** and the circuit block **902** and the signal paths in the shared signal buses between the shared-memory circuit block **901** and the circuit block **903** are turned off.

[0549] Alternatively, the interconnection for transmitting data between the circuit block **902** and the shared-memory circuit block **901** may have a data bit width equal to or more than 16, equal to or more than 32, equal to or more than 64, equal to or more than 128, equal to or more than 512, or between 16 and 128. The interconnection for transmitting data between the circuit block **903** and the shared-memory circuit block **901** may have a data bit width equal to or more than 16, equal to or more than 32, equal to or more than 64, equal to or more than 128, equal to or more than 512, or between 16 and 128. The interconnection for transmitting data between the circuit block **904** and the shared-memory circuit block **901** may have a data bit width equal to or more than 16, equal to or more than 32, equal to or more than 64, equal to or more than 128, equal to or more than 512, or between 16 and 128.

[0550] The interconnection for transmitting signals between the circuit blocks **902** and **903** can be through the signal interconnects, buses or traces **182**, for example, having a data bit width equal to or more than 16, equal to or more than 32, equal to or more than 64, equal to or more than 128, equal to or more than 512, or between 16 and 128.

[0551] The interconnection for transmitting signals between the circuit blocks **902**, **903** and **904** can be through the shared signal interconnects, buses or traces **192**, for example, having a data bit width equal to or more than 16, equal to or more than 32, equal to or more than 64, equal to or more than 128, equal to or more than 512, or between 16 and 128. Alternatively, the interconnection for transmitting signals between the circuit blocks **902** and **904** may have a data bit width equal to or more than 16, equal to or more than 32, equal to or more than 64, equal to or more than 128, equal to or more than 512, or between 16 and 128, and the interconnection for transmitting signals between the circuit blocks **903** and **904** may have a data bit width equal to or more than 16, equal to or more than 32, equal to or more than 64, equal to or more than 128, equal to or more than 512, or between 16 and 128.

[0552] FIGS. **106**A-**106**H schematically show eight alternates with regards to the chip **900** illustrated in FIG. **105**. Referring to FIG. **106**A, the chip **900** may include a semiconductor substrate **601**, multiple transistors **705**, including transistors **705***a* and **705***b*, in and/or over the semiconductor substrate **601**, multiple dielectric layers **611** over the semiconductor substrate **601**, multiple fine-line metal layers **923** in the dielectric layers **611**, multiple via plugs **924** and **926** in the dielectric layers **611**, multiple metal traces or pads **925** in or on one of the dielectric layers **611**, a passivation layer **501** over the semiconductor substrate **601**, over the transistors **705**, over the dielectric layers **611**, over the fine-line metal

layers **923** and over the metal traces or pads **925**, a polymer layer **502** on the passivation layer **501**, a patterned metal layer **920** on the polymer layer **502** and on multiple contact points of the metal traces or pads **925**, a polymer layer **503** on the patterned metal layer **920** and on the polymer layer **502**, and multiple metal pillars or bumps **922** (one of them is shown) on multiple contact points of the patterned metal layer **920** and on the polymer layer **503**.

[0553] The semiconductor substrate **601** may be a silicon substrate or a gallium arsenide (GaAs) substrate, and may have a thickness greater than 1 micrometer, such as between 1 and 30 micrometers, between 2 and 10 micrometers, between 5 and 50 micrometers, between 10 and 100 micrometers or between 10 and 500 micrometers. Each of the dielectric layers **611** can be composed of a single layer of silicon oxide, silicon nitride, silicon oxynitride, silicon carbon nitride or silicon oxycarbide, or a composite layer made of the previously described materials.

[0554] The fine-line metal layers **923** and the metal traces or pads **925** can be formed by a damascene or double-damascene process including an electroplating process and a chemical mechanical polishing (CMP) process. Each of the fine-line metal layers **923** and the metal traces or pads **925** can be composed of an electroplated copper layer **743**, an adhesion/barrier layer **741** at a bottom of the electroplated copper layer **743** and at sidewalls of the electroplated copper layer **743**, and a seed layer **742** between the electroplated copper layer **743** and the adhesion/barrier layer **741**, at the bottom of the electroplated copper layer **743** and at the sidewalls of the electroplated copper layer **743**. The electroplated copper layer **743**, for example, may have a thickness smaller than 1.5 micrometers, such as between 0.15 and 1.2 micrometers, and may have a width smaller than 1 micrometer, such as between 0.05 and 1 micrometers. The seed layer **742** can be formed by a physical-vapor deposition (PVD) process, such as sputtering process, and may include copper or titanium-copper alloy. The adhesion/barrier layer **741** can be formed by a physical-vapor deposition (PVD) process, such as sputtering process, and may include titanium, a titanium-tungsten alloy, titanium nitride, chromium, tantalum or tantalum nitride. The sidewalls of the electroplated copper layer **743** are covered by the adhesion/barrier layer **741** and the seed layer **742**.

[0555] Alternatively, the metal traces or pads **925** can be formed by a process including sputtering aluminum. Each of the metal traces or pads **925**, for example, may be composed of a titanium-containing layer, such as a single layer of titanium nitride, and an aluminum or aluminum-alloy layer with a thickness between 0.25 and 3 micrometers on the titanium-containing layer.

[0556] The metal traces or pads **925** can be connected to the top fine-line metal layers **923** through the via plugs **926**. The top fine-line metal layers **923** can be connected to the bottom fine-line metal layers **923** through the via plugs **924**. The bottom fine-line metal layers **923** can be connected to the transistors **705** through the via plugs **924**.

[0557] The passivation layer **501** can be formed by a chemical vapor deposition (CVD) method, and may have a thickness greater than 0.2 micrometers, such as between 0.3 and 1.5 micrometers. The passivation layer **501** is commonly made of silicon oxide (such as SiO_2), silicon nitride (such as Si_3N_4), silicon oxynitride, silicon oxycarbide, phosphosilicate glass (PSG), silicon carbon nitride or a composite of the previously described materials. The passivation layer **501** can be composed of one or more inorganic layers. For example, the passivation layer **501** can be composed of an oxide layer, such as silicon oxide or silicon oxycarbide, having a thickness between 0.2 and 1.2 micrometers and a nitride layer, such as silicon nitride, silicon oxynitride or silicon carbon nitride, having a thickness between 0.2 and 1.2 micrometers on the oxide layer. Alternatively, the passivation layer **501** can be a single layer of silicon nitride, silicon oxynitride or silicon carbon nitride with a thickness between 0.3 and 1.5 micrometers.

[0558] Multiple openings **921** (two of them are shown) in the passivation layer **501** are over the contact points of the metal traces or pads **925** and expose them, and the contact points of the metal traces or pads **925** are at bottoms of the openings **921**.

[0559] The polymer layer **502** may have a thickness between 2 and 30 micrometers. Multiple openings **502***a* in the polymer layer **502** are over the contact points, exposed by the openings **921**, of the metal traces or pads **925** and expose them. The thickness of the polymer layer **502** can be greater than that of the passivation layer **501** and greater than that of each of the dielectric layers **611**.

[0560] The patterned metal layer **920** can be composed of an adhesion layer **301**, a seed layer **302** and a metal layer **303**. The adhesion layer **301** can be formed on the polymer layer **502** and on the contact points, exposed by the openings **502***a*, of the metal traces or pads **925**. The seed layer **302** can be formed on the adhesion layer **301**, over the polymer layer **502** and over the contact points, exposed by the openings **502***a*, of the metal traces or pads **925**. The metal layer **303** can be formed on the seed layer **302**, over the polymer layer **502** and over the contact points, exposed by the openings **502***a*, of the metal traces or pads **925**. The sidewalls of the metal layer **303** are not covered by the seed layer **302** and the adhesion layer **301**. The thickness of the metal layer **303** can be greater than that of each of the metal traces or pads **925** and greater than that of each of the fine-line metal layers **923**. The passivation layer **501** is between the patterned metal layer **920** and the metal traces or pads **925**. The specification of the adhesion layer **301**, the seed layer **302** and the metal layer **303** can be referred to as the specification of the adhesion layer **21**, **41** or **61**, the seed layer **22**, **42** or **62** and the metal layer **23**, **43** or **63** as illustrated in FIG. **8**, **19** or **29**, respectively.

[0561] For example, the adhesion layer **301** can be a titanium-containing layer, such as a single layer of titanium-tungsten alloy, titanium or titanium nitride, with a thickness smaller than 1 micrometer, such as between 1 nanometer and 0.5 micrometers, and preferably between 1 nanometer and 0.1 micrometers, on the polymer layer **502** and on the contact points, exposed by the openings **502***a*, of the metal traces or pads **925**. The seed layer **302** can be a single layer of copper or titanium-copper alloy with a thickness smaller than 1 micrometer, such as between 10 nanometers and 0.8 micrometers, and preferably between 20 nanometer and 0.5 micrometers, on the titanium-containing layer. The metal layer **303** can be a copper layer having a thickness greater than 1 micrometer, such as between 2 and 30 micrometers, and preferably between 3 and 10 micrometers, on the single layer of copper or titanium-copper alloy.

[0562] Alternatively, the adhesion layer **301** can be a tantalum-containing layer, such as a single layer of tantalum or tantalum nitride, with a thickness smaller than 1 micrometer, such as between 1 nanometer and 0.5 micrometers, and preferably between 1 nanometer and 0.1 micrometers, on the polymer layer **502** and on the contact points, exposed by the

openings **502***a*, of the metal traces or pads **925**. The seed layer **302** can be a single layer of copper or titanium-copper alloy with a thickness smaller than 1 micrometer, such as between 10 nanometers and 0.8 micrometers, and preferably between 20 nanometer and 0.5 micrometers, on the tantalum-containing layer. The metal layer **303** can be a copper layer having a thickness greater than 1 micrometer, such as between 2 and 30 micrometers, and preferably between 3 and 10 micrometers, on the single layer of copper or titanium-copper alloy.

[0563] The patterned metal layer **920** can provide the metal interconnects or traces **171-175**, **181-185** and **191-195** illustrated in FIG. **105**. For example, the transistor **705***a*, when being in the shared-memory circuit block **901** illustrated in FIG. **105**, can be physically and electrically connected to the transistor **705***b*, when being in the circuit block **902**, **903** or **904** illustrated in FIG. **105**, through the metal interconnect or trace **171**,**172** **173**, **174** or **175** illustrated in FIG. **105** provided by the patterned metal layer **920**. Alternatively, the transistor **705***a*, when being in the circuit block **902** illustrated in FIG. **105**, can be physically and electrically connected to the transistor **705***b*, when being in the circuit block **903** illustrated in FIG. **105**, through the metal interconnect or trace **181**,**182** **183**, **184** or **185** illustrated in FIG. **105** provided by the patterned metal layer **920**. Alternatively, the transistor **705***a*, when being in the circuit block **904** illustrated in FIG. **105**, can be physically and electrically connected to the transistor **705***b*, when being in the circuit block **902** or **903** illustrated in FIG. **105**, through the metal interconnect or trace **191**,**192** **193**, **194** or **195** illustrated in FIG. **105** provided by the patterned metal layer **920**.

[0564] The polymer layer **503** may have a thickness between 2 and 30 micrometers. Multiple openings **503***a* (one of them is shown) in the polymer layer **503** are over the contact points (of the metal layer **303**) of the patterned metal layer **920** and expose them. The thickness of the polymer layer **503** can be greater than that of the passivation layer **501** and greater than that of each of the dielectric layers **611**.

[0565] The metal pillars or bumps **922** can be composed of an adhesion layer **311**, a seed layer **312** and a metal layer **313**. The adhesion layer **311** can be formed on the contact points, exposed by the openings **503***a*, of the metal layer **303** and on the polymer layer **503**. The seed layer **312** can be formed on the adhesion layer **311**. The metal layer **313** can be formed on the seed layer **312**. The metal layer **313** has a sidewall or sidewalls not covered by the seed layer **312** and the adhesion layer **311**.

[0566] The adhesion layer **311** may have a thickness smaller than 1 micrometer, such as between 1 nanometer and 0.5 micrometers, and preferably between 1 nanometer and 0.1 micrometers, and may include titanium, a titanium-tungsten alloy, titanium nitride, tantalum, tantalum nitride or chromium. The seed layer **312** may have a thickness smaller than 1 micrometer, such as between 10 nanometers and 0.8 micrometers, and preferably between 20 nanometer and 0.5 micrometers, and may include copper, titanium-copper alloy, gold or nickel. The metal layer **313** may have a thickness greater than 5 micrometers, such as between 5 and 50 micrometers, and preferably between 10 and 20 micrometers, and can be a single layer of copper, nickel or gold, or a composite layer including a copper layer having a thickness between 5 and 50 micrometers, a nickel layer having a thickness between 0.1 and 10 micrometers on the copper layer, and a gold layer having a thickness between 0.01 and 5 micrometers on the nickel layer.

[0567] For example, the adhesion layer **311** can be a titanium-containing layer, such as a single layer of titanium-tungsten alloy, titanium or titanium nitride, with a thickness smaller than 1 micrometer, such as between 1 nanometer and 0.5 micrometers, and preferably between 1 nanometer and 0.1 micrometers, on the contact points, exposed by the openings **503***a*, of the metal layer **303** and on the polymer layer **503**. The seed layer **312** can be a single layer of copper or titanium-copper alloy with a thickness smaller than 1 micrometer, such as between 10 nanometers and 0.8 micrometers, and preferably between 20 nanometer and 0.5 micrometers, on the titanium-containing layer. The metal layer **313** can be a copper layer with a thickness greater than 5 micrometers, such as between 5 and 50 micrometers, and preferably between 10 and 20 micrometers, on the single layer of copper or titanium-copper alloy.

[0568] Alternatively, the adhesion layer **311** can be a tantalum-containing layer, such as a single layer of tantalum or tantalum nitride, with a thickness smaller than 1 micrometer, such as between 1 nanometer and 0.5 micrometers, and preferably between 1 nanometer and 0.1 micrometers, on the contact points, exposed by the openings **503***a*, of the metal layer **303** and on the polymer layer **503**. The seed layer **312** can be a single layer of copper or titanium-copper alloy with a thickness smaller than 1 micrometer, such as between 10 nanometers and 0.8 micrometers, and preferably between 20 nanometer and 0.5 micrometers, on the tantalum-containing layer. The metal layer **313** can be a copper layer with a thickness greater than 5 micrometers, such as between 5 and 50 micrometers, and preferably between 10 and 20 micrometers, on the single layer of copper or titanium-copper alloy.

[0569] Referring to FIG. **106**B, the chip **900** is similar to that shown in FIG. **106**A except that the polymer layer **503** is not formed on the polymer layer **502** and on the patterned metal layer **920**, and the metal pillars or bumps **922** (one of them is shown) are formed without the adhesion layer **311** and the seed layer **312**, but formed with the metal layer **313** directly on multiple contact points of the metal layer **303** of the patterned metal layer **920**. The metal layer **313** shown in FIG. **106**B may have a thickness greater than 5 micrometers, such as between 5 and 50 micrometers, and preferably between 10 and 20 micrometers, and can be a single layer of copper, nickel or gold, or a composite layer including a copper layer having a thickness between 5 and 50 micrometers, a nickel layer having a thickness between 0.1 and 10 micrometers on the copper layer, and a gold layer having a thickness between 0.01 and 5 micrometers on the nickel layer. The element in FIG. **106**B indicated by a same reference number as indicates the element in FIG. **106**A has a same material and spec as the element illustrated in FIG. **106**A.

[0570] Referring to FIG. **106**C, the chip **900** is similar to that shown in FIG. **106**A except that the polymer layer **502** is omitted, and the adhesion layer **301** of the patterned metal layer **920** is formed on the passivation layer **501** and on the contact points, exposed by the openings **921**, of the metal traces or pads **925**. The element in FIG. **106**C indicated by a same reference number as indicates the element in FIG. **106**A has a same material and spec as the element illustrated in FIG. **106**A.

[0571] Referring to FIG. **106**D, the chip **900** is similar to that shown in FIG. **106**C except that an insulating layer **504** is formed on the metal layer **303** and on the passivation layer **501**, and the polymer layer **503** is formed on the insulating layer **504** and over the metal layer **303**. The patterned metal

layer **920** is covered with the insulating layer **504**, and multiple openings **504***a* (one of them is shown) in the insulating layer **504** are over multiple contact points of the metal layer **303** and under the openings **503***a* and expose these contact points. The insulating layer **504** may have a thickness larger than 0.1 micrometers, such as between 0.2 and 1.5 micrometers, and preferably between 0.3 and 1 micrometers, and can be a single layer of silicon oxide, silicon oxynitride or silicon nitride, or a composite layer including an oxide layer, such as silicon oxide, and a nitride layer, such as silicon nitride, on the oxide layer. The insulating layer **504** can be formed by a chemical vapor deposition (CVD) process. The element in FIG. **106**D indicated by a same reference number as indicates the element in FIG. **106**A has a same material and spec as the element illustrated in FIG. **106**A.

[0572] Referring to FIG. **106**E, the chip **900** is similar to that shown in FIG. **106**A except that the polymer layers **502** and **503** are omitted, the adhesion layer **301** of the patterned metal layer **920** is formed on the passivation layer **501** and on the contact points, exposed by the openings **921**, of the metal traces or pads **925**, and the metal pillars or bumps **922** (one of them is shown) are formed without the adhesion layer **311** and the seed layer **312**, but formed with the metal layer **313** directly on multiple contact points of the metal layer **303** of the patterned metal layer **920**. The metal layer **313** shown in FIG. **106**E may have a thickness greater than 5 micrometers, such as between 5 and 50 micrometers, and preferably between 10 and 20 micrometers, and can be a single layer of copper, nickel or gold, or a composite layer including a copper layer having a thickness between 5 and 50 micrometers, a nickel layer having a thickness between 0.1 and 10 micrometers on the copper layer, and a gold layer having a thickness between 0.01 and 5 micrometers on the nickel layer. The element in FIG. **106**E indicated by a same reference number as indicates the element in FIG. **106**A has a same material and spec as the element illustrated in FIG. **106**A.

[0573] Referring to FIG. **106**F, compared with the chip **900** illustrated in FIG. **160**A, the chip **900** shown in FIG. **160**F further includes a patterned metal layer **919** and a polymer layer **505**. The element in FIG. **106**F indicated by a same reference number as indicates the element in FIG. **106**A has a same material and spec as the element illustrated in FIG. **106**A.

[0574] The patterned metal layer **919** can be formed on the polymer layer **503**, over the patterned metal layer **920**, and on the contact points, exposed by the openings **503***a* in the polymer layer **503**, of the metal layer **303** of the patterned metal layer **920**. The patterned metal layer **919** can be composed of an adhesion layer **321**, a seed layer **322** and a metal layer **323**.

[0575] The adhesion layer **321** can be formed on the polymer layer **503**, over the patterned metal layer **920**, and on the contact points, exposed by the openings **503***a*, of the metal layer **303**. The adhesion layer **321** may have a thickness smaller than 1 micrometer, such as between 1 nanometer and 0.5 micrometers, and may include titanium, a titanium-tungsten alloy, titanium nitride, tantalum, tantalum nitride or chromium. The seed layer **322** can be formed on the adhesion layer **321**, over the patterned metal layer **920**, over the polymer layer **503** and over the contact points, exposed by the openings **503***a*, of the metal layer **303**. The seed layer **322** may have a thickness smaller than 1 micrometer, such as between 10 nanometers and 0.8 micrometers, and may include copper, titanium-copper alloy, gold or nickel. The metal layer **323** can be formed on the seed layer **322**, over the patterned metal layer **920**, over the polymer layer **503** and over the contact points, exposed by the openings **503***a*, of the metal layer **303**. Sidewalls of the metal layer **323** are not covered by the seed layer **322** and the adhesion layer **321**. The thickness of the metal layer **323** can be greater than that of each of the metal traces or pads **925** and greater than that of each of the fine-line metal layers **923**.

[0576] For example, the adhesion layer **321** can be a titanium-containing layer, such as a single layer of titanium-tungsten alloy, titanium or titanium nitride, with a thickness smaller than 1 micrometer, such as between 1 nanometer and 0.5 micrometers, on the polymer layer **503**, over the patterned metal layer **920** and on the contact points, exposed by the openings **503***a*, of the metal layer **303**. The seed layer **322** can be a single layer of copper or titanium-copper alloy with a thickness smaller than 1 micrometer, such as between 10 nanometers and 0.8 micrometers, on the titanium-containing layer, over the patterned metal layer **920**, over the polymer layer **503** and over the contact points, exposed by the openings **503***a*, of the metal layer **303**. The metal layer **323** can be a copper layer having a thickness greater than 1 micrometer, such as between 2 and 30 micrometers, and preferably between 3 and 10 micrometers, on the single layer of copper or titanium-copper alloy, over the patterned metal layer **920**, over the polymer layer **503** and over the contact points, exposed by the openings **503***a*, of the metal layer **303**.

[0577] Alternatively, the adhesion layer **321** can be a tantalum-containing layer, such as a single layer of tantalum or tantalum nitride, with a thickness smaller than 1 micrometer, such as between 1 nanometer and 0.5 micrometers, on the polymer layer **503**, over the patterned metal layer **920** and on the contact points, exposed by the openings **503***a*, of the metal layer **303**. The seed layer **322** can be a single layer of copper or titanium-copper alloy with a thickness smaller than 1 micrometer, such as between 10 nanometers and 0.8 micrometers, on the tantalum-containing layer, over the patterned metal layer **920**, over the polymer layer **503** and over the contact points, exposed by the openings **503***a*, of the metal layer **303**. The metal layer **323** can be a copper layer having a thickness greater than 1 micrometer, such as between 2 and 30 micrometers, and preferably between 3 and 10 micrometers, on the single layer of copper or titanium-copper alloy, over the patterned metal layer **920**, over the polymer layer **503** and over the contact points, exposed by the openings **503***a*, of the metal layer **303**.

[0578] The polymer layer **505** can be formed on the metal layer **323** of the patterned metal layer **919** and on the polymer layer **503**. Multiple openings **505***a* (one of them is shown) in the polymer layer **505** are over multiple contact points of the metal layer **323** and expose them. The metal pillars or bumps **922** (one of them is shown) can be formed on the contact points, exposed by the openings **505***a*, of the metal layer **323** and on the polymer layer **505**.

[0579] For example, the adhesion layer **311** can be a titanium-containing layer, such as a single layer of titanium-tungsten alloy, titanium or titanium nitride, with a thickness smaller than 1 micrometer, such as between 1 nanometer and 0.5 micrometers, on the contact points, exposed by the openings **505***a*, of the metal layer **323** and on the polymer layer **505**. The seed layer **312** can be a single layer of copper or titanium-copper alloy with a thickness smaller than 1 micrometer, such as between 10 nanometers and 0.8 micrometers, on the titanium-containing layer. The metal layer **313** can be a copper layer with a thickness greater than

5 micrometers, such as between 5 and 50 micrometers, and preferably between 10 and 20 micrometers, on the single layer of copper or titanium-copper alloy. The copper layer has a sidewall or sidewalls not covered by the titanium-containing layer and the single layer of copper or titanium-copper alloy.

[0580] Alternatively, the adhesion layer **311** can be a tantalum-containing layer, such as a single layer of tantalum or tantalum nitride, with a thickness smaller than 1 micrometer, such as between 1 nanometer and 0.5 micrometers, on the contact points, exposed by the openings **505***a*, of the metal layer **323** and on the polymer layer **505**. The seed layer **312** can be a single layer of copper or titanium-copper alloy with a thickness smaller than 1 micrometer, such as between 10 nanometers and 0.8 micrometers, on the tantalum-containing layer. The metal layer **313** can be a copper layer with a thickness greater than 5 micrometers, such as between 5 and 50 micrometers, and preferably between 10 and 20 micrometers, on the single layer of copper or titanium-copper alloy. The copper layer has a sidewall or sidewalls not covered by the tantalum-containing layer and the single layer of copper or titanium-copper alloy.

[0581] The metal interconnects or traces **171-175**, **181-185** or **191-195** as shown in FIG. **105**, for example, can be provided by the patterned metal layer **920** and connected to some of the metal pillars or bumps **922** through the patterned metal layer **919**. Alternatively, the metal interconnects or traces **171-175**, **181-185** or **191-195** as shown in FIG. **105** can be provided by the patterned metal layers **919** and **920**, and connected to some of the metal pillars or bumps **922** formed on the patterned metal layer **919**.

[0582] In a first case, the transistor **705***a*, when being in the shared-memory circuit block **901** illustrated in FIG. **105**, can be physically and electrically connected to the transistor **705***b*, when being in the circuit block **902**, **903** or **904** illustrated in FIG. **105**, through the metal interconnect or trace **171**,**172** **173**, **174** or **175** illustrated in FIG. **105** provided by the patterned metal layer **920**. The transistor **705***c*, when being in the circuit block **904** illustrated in FIG. **105**, can be physically and electrically connected to the transistor **705***d*, when being in the circuit block **902** or **903** illustrated in FIG. **105**, through the metal interconnect or trace **191**,**192** **193**, **194** or **195** illustrated in FIG. **105** provided by the patterned metal layers **919** and **920**.

[0583] In a second case, the transistor **705***a*, when being in the circuit block **904** illustrated in FIG. **105**, can be physically and electrically connected to the transistor **705***b*, when being in the circuit block **902** or **903** illustrated in FIG. **105**, through the metal interconnect or trace **191**,**192** **193**, **194** or **195** illustrated in FIG. **105** provided by the patterned metal layer **920**. The transistor **705***c*, when being in the shared-memory circuit block **901** illustrated in FIG. **105**, can be physically and electrically connected to the transistor **705***d*, when being in the circuit block **902**, **903** or **904** illustrated in FIG. **105**, through the metal interconnect or trace **171**,**172** **173**, **174** or **175** illustrated in FIG. **105** provided by the patterned metal layers **919** and **920**.

[0584] In a third case, the transistor **705***a*, when being in the shared-memory circuit block **901** illustrated in FIG. **105**, can be physically and electrically connected to the transistor **705***b*, when being in the circuit block **902**, **903** or **904** illustrated in FIG. **105**, through the metal interconnect or trace **171**,**172** **173**, **174** or **175** illustrated in FIG. **105** provided by the patterned metal layer **920**. The transistor **705***c*, when being in the circuit block **902** illustrated in FIG. **105**, can be physically and electrically connected to the transistor **705***d*, when being in the circuit block **903** illustrated in FIG. **105**, through the metal interconnect or trace **181**,**182** **183**, **184** or **185** illustrated in FIG. **105** provided by the patterned metal layers **919** and **920**.

[0585] Referring to FIG. **106**G, the chip **900** is similar to that shown in FIG. **106**F except that the polymer layer **502** is omitted, the polymer layer is formed on the passivation layer **501** and on the patterned metal layer **920**, and the adhesion layer **301** of the patterned metal layer **920** is formed on the passivation layer **501** and on the contact points, exposed by the openings **921**, of the metal traces or pads **925**. The element in FIG. **106**G indicated by a same reference number as indicates the element in FIGS. **106**A and **106**F has a same material and spec as the element illustrated in FIGS. **106**A and **106**F.

[0586] Referring to FIG. **106**H, the chip **900** is similar to that shown in FIG. **106**G except that an insulating layer **504** is formed on the metal layer **303** and on the passivation layer **501**, and the polymer layer **503** is formed on the insulating layer **504** and over the metal layer **303**. The patterned metal layer **920** is covered with the insulating layer **504**, and multiple openings **504***a* in the insulating layer **504** are over multiple contact points of the metal layer **303** and under the openings **503***a* and expose these contact points. The insulating layer **504** may have a thickness larger than 0.1 micrometers, such as between 0.2 and 1.5 micrometers, and preferably between 0.3 and 1 micrometers, and can be a single layer of silicon oxide, silicon oxynitride or silicon nitride, or a composite layer including an oxide layer, such as silicon oxide, and a nitride layer, such as silicon nitride, on the oxide layer. The insulating layer **504** can be formed by a chemical vapor deposition (CVD) process. The element in FIG. **106**H indicated by a same reference number as indicates the element in FIGS. **106**A and **106**F has a same material and spec as the element illustrated in FIGS. **106**A and **106**F.

[0587] The structure of any one of the chips **900** illustrated in FIGS. **106**A-**106**H can be applied to one or more of the chips **120**, **130** and **140**. For example, the structure of the chip **900** may be applied to any one of the chips **120** shown in FIG. **8**, **52**, **54**, **55**, **66**, **67**, **72**, **73**, **74**, **83**, **84**, **107**K or **107**L. The specifications of the metal pillars or bumps **922**, the patterned metal layer **920** and the metal traces or pads **925** may be applied to those of the metal pillars or bumps **24**, the patterned metal layer **2** and the metal traces or pads **26**, respectively, and the processes of forming the metal pillars or bumps **922**, the patterned metal layer **920** and the metal traces or pads **925** may be applied to those of forming the metal pillars or bumps **24**, the patterned metal layer **2** and the metal traces or pads **26**, respectively.

[0588] Alternatively, the structure of the chip **900** may be applied to any one of the chips **130** shown in FIG. **19**, **52**, **54**, **55**, **66**, **67**, **72**, **73**, **74**, **83**, **84**, **107**K, **107**L or **108**F. The specifications of the metal pillars or bumps **922**, the patterned metal layer **920** and the metal traces or pads **925** may be applied to those of the metal pillars or bumps **44**, the patterned metal layer **4** and the metal traces or pads **46**, respectively, and the processes of forming the metal pillars or bumps **922**, the patterned metal layer **920** and the metal traces or pads **925** may be applied to those of forming the metal pillars or bumps **44**, the patterned metal layer **4** and the metal traces or pads **46**, respectively.

[0589] Alternatively, the structure of the chip **900** may be applied to any one of the chips **140** shown in FIG. **29**, **52**, **54**,

55, **66**, **67**, **72**, **73**, **74**, **83**, **84**, **85**, **107**K, **107**L or **108**F. The specifications of the metal pillars or bumps **922**, the patterned metal layer **920** and the metal traces or pads **925** may be applied to those of the metal pillars or bumps **64**, the patterned metal layer **6** and the metal traces or pads **66**, respectively, and the processes of forming the metal pillars or bumps **922**, the patterned metal layer **920** and the metal traces or pads **925** may be applied to those of forming the metal pillars or bumps **64**, the patterned metal layer **6** and the metal traces or pads **66**, respectively.

[0590] FIGS. **107**A-**107**D show a process for forming another alternate of chips **120**. Referring to FIG. **107**A, a semiconductor wafer **1000** may comprise a semiconductor substrate **20**, multiple transistors in and/or over the semiconductor substrate **20**, multiple fine-line metal layers over the semiconductor substrate **20**, multiple dielectric layers over the semiconductor substrate **20** and between the fine-line metal layers, multiple via plugs in the dielectric layers, a passivation layer **25** over the semiconductor substrate **20**, over the transistors, over the dielectric layers and over the fine-line metal layers, a patterned metal layer **2** on the passivation layer **25**, and multiple metal pillars or bumps **24** on the patterned metal layer **2**. The dielectric layers can be composed of a single layer of silicon oxide, silicon nitride, silicon oxynitride, silicon carbon nitride or silicon oxycarbide, or a composite layer made of the previously described materials. The specification of the passivation layer **25** can be referred to as the specification of the passivation layer **25** as illustrated in FIG. **8**. In a case, the passivation layer **25** of the semiconductor wafer **1000** may include a topmost inorganic layer of the semiconductor wafer **1000**, and the topmost inorganic layer of the semiconductor wafer **1000** can be a layer of a nitrogen-containing compound, such as silicon nitride, silicon oxynitride, silicon carbon nitride or silicon carbon oxynitride, having a thickness greater than 0.2 micrometers, such as between 0.2 and 1.5 micrometers, or a layer of an oxygen-containing compound, such as silicon oxide, silicon oxynitride, silicon carbon oxide or silicon carbon oxynitride, having a thickness greater than 0.2 micrometers, such as between 0.2 and 1.5 micrometers.

[0591] In the semiconductor wafer **1000**, multiple metal traces or pads **26** provided by the topmost fine-line metal layer are formed over the semiconductor substrate **20**, on one of the dielectric layers and under the passivation layer **25**. Multiple openings **25***a* in the passivation layer **25** are over multiple contact points of the metal traces or pads **26** and expose them, and the contact points of the metal traces or pads **26** are at bottoms of the openings **25***a*. Each of the openings **25***a* may have a width or diameter between 0.5 and 100 micrometers, and preferably between 1 and 20 micrometers. The patterned metal layer **2** can be formed on the contact points, exposed by the openings **25***a*, of the metal traces or pads **26** and on the passivation layer **25**, and can be connected to the contact points, exposed by the openings **25***a*, of the metal traces or pads **26** through the openings **25***a*.

[0592] The metal traces or pads **26** may include aluminum, aluminum-copper-alloy or electroplated copper. Alternatively, the structure and the circuit design of the metal traces or pads **26** can be referred to as the structure and the circuit design of the metal traces or pads **925** as illustrated in FIG. **106**A, that is, the metal traces or pads **26**, for example, can be formed by a damascene or double-damascene process including an electroplating process and a chemical mechanical polishing (CMP) process, and can be composed of the electroplated copper layer **743**, the adhesion/barrier layer **741** at the bottom of the electroplated copper layer **743** and at the sidewalls of the electroplated copper layer **743**, and the seed layer **742** between the electroplated copper layer **743** and the adhesion/barrier layer **741**, at the bottom of the electroplated copper layer **743** and at the sidewalls of the electroplated copper layer **743**. The sidewalls of the electroplated copper layer **743** are covered by the adhesion/barrier layer **741** and the seed layer **742**.

[0593] The semiconductor substrate **20** of the semiconductor wafer **1000** can be a silicon substrate or a gallium arsenide (GaAs) substrate, and may have a thickness T**3** greater than 100 micrometers, such as between 100 and 300 micrometers, or between 150 and 250 micrometers.

[0594] The patterned metal layer **2** of the semiconductor wafer **1000** can be composed of an adhesion layer **21** on the contact points, exposed by the openings **25***a*, of the metal traces or pads **26** and on the passivation layer **25**, a seed layer **22** on the adhesion layer **21**, and a metal layer **23** on the seed layer **22**. The specification of the adhesion layer **21**, the seed layer **22** and the metal layer **23** can be referred to as the specification of the adhesion layer **21**, the seed layer **22** and the metal layer **23** as illustrated in FIG. **8**, respectively. The sidewalls of the metal layer **23** are not covered by the adhesion layer **21** and the seed layer **22**.

[0595] The metal pillars or bumps **24** can be formed on the metal layer **23** of the patterned metal layer **2**, and can be connected to the contact points, exposed by the openings **25***a*, of the metal traces or pads **26** through the patterned metal layer **2** and through the openings **25***a* in the passivation layer **25**. Each of the metal pillars or bumps **24** has a thickness or height greater than 5 micrometers, such as between 5 and 50 micrometers, and preferably between 10 and 20 micrometers. The specification of the metal pillars or bumps **24** can be referred to as the specification of the metal pillars or bumps **24** as illustrated in FIG. **8**.

[0596] Next, referring to FIG. **107**B, a polymer layer **285** can be formed on the passivation layer **25**, on the patterned metal layer **2**, and on the metal pillars or bumps **24** by using a molding process or a lamination process. The patterned metal layer **2** and the metal pillars or bumps **24** are covered with the polymer layer **285**. The top surface **285***a* of the polymer layer **285** is substantially flat. The polymer layer **285** can be a polyimide or epoxy layer having a coefficient of thermal expansion smaller than 15, such as between 3 and 6, between 2 and 8, between 5 and 10 or between 8 and 15.

[0597] The semiconductor wafer **1000** has a top side **20***a* and a bottom side **29***b*. The metal traces or pads **26**, the passivation layer **25**, the patterned metal layer **2**, the metal pillars or bumps **24** and the polymer layer **285** are over the top side **20***a* of the semiconductor wafer **1000**.

[0598] Next, referring to FIG. **107**C, the semiconductor substrate **20** of the semiconductor wafer **1000** is thinned to a thickness T**4** between 1 and 30 micrometers, between 2 and 10 micrometers, between 5 and 50 micrometers or between 10 and 100 micrometers by mechanically grinding or chemically mechanically polishing (CMP) the bottom side **20***b* of the semiconductor substrate **20**.

[0599] Referring to FIG. **107**D, after the step illustrated in FIG. **107**C, the semiconductor wafer **1000** can be cut into a plurality of individual chip **120** by a die-sawing process. Compared with the chips **120** illustrated in FIG. **8**, each of the chips **120** (one of them is shown) illustrated in FIG. **107**D further includes the polymer layer **285** which covers the pat-

terned metal layer **2** and the metal pillars or bumps **24** and has a first sidewall and a second sidewall opposite to and substantially parallel with the first sidewall. In each of the chips **120**, the top surface of the polymer layer **285** is substantially flat.

[0600] FIG. **107**E shows a cross-sectional view for another alternate of chips **130**. The chips **130** can be formed by a process including the steps illustrated in FIGS. **107**A-**107**D. Compared with the chips **130** illustrated in FIG. **19**, each of the chips **130** illustrated in FIG. **107**E further includes the polymer layer **285** which covers the patterned metal layer **4** and the metal pillars or bumps **44** and has a first sidewall and a second sidewall opposite to and substantially parallel with the first sidewall. In each of the chips **130**, the top surface of the polymer layer **285** is substantially flat, and the semiconductor substrate **40** has a thickness T**4** between 1 and 30 micrometers, between 2 and 10 micrometers, between 5 and 50 micrometers or between 10 and 100 micrometers.

[0601] FIG. **107**F shows a cross-sectional view for another alternate of chips **140**. The chips **140** can be formed by a process including the steps illustrated in FIGS. **107**A-**107**D. Compared with the chips **140** illustrated in FIG. **29**, each of the chips **140** illustrated in FIG. **107**F further includes the polymer layer **285** which covers the patterned metal layer **6** and the metal pillars or bumps **64** and has a first sidewall and a second sidewall opposite to and substantially parallel with the first sidewall. In each of the chips **140**, the top surface of the polymer layer **285** is substantially flat, and the semiconductor substrate **60** has a thickness T**4** between 1 and 30 micrometers, between 2 and 10 micrometers, between 5 and 50 micrometers or between 10 and 100 micrometers.

[0602] FIGS. **107**G-**107**K show a process for forming another system-in package or multichip module according to another embodiment of the present disclosure. Referring to FIG. **107**G, after the steps illustrated in FIGS. **1**-**7**, the chips **120** (one of them is shown) illustrated in FIG. **107**D can be attached to the metal layer **13** of the patterned metal layer **1** and to the dielectric or insulating layer **10** by the previously described glue material **80**.

[0603] Alternatively, after the steps illustrated in FIGS. **1**-**7**, a polymer layer can be formed on the metal layer **13** of the patterned metal layer **1** and on the dielectric or insulating layer **10**, and then the chips **120** illustrated in FIG. **107**D can be attached to the polymer layer by the glue material **80**. In this case, the glue material **80** is formed on the polymer layer, and the chips **120** illustrated in FIG. **107**D are formed on the glue material **80**. The polymer layer can be a polyimide layer or a benzocyclobutene layer having a thickness between 2 and 30 micrometers.

[0604] Referring to FIG. **107**H, after attaching the chips **120** to the metal layer **13** of the patterned metal layer **1** and to the dielectric or insulating layer **10**, the previously described filling or encapsulating layer **85** can be formed over the substrate **110**, on the dielectric or insulating layer **10**, on the metal layer **13** of the patterned metal layer **1**, on the metal pillars or bumps **14**, and on the polymer layer **285** of chips **120** by using a molding process, a spin coating process, a lamination process or a printing process.

[0605] Next, referring to FIG. **107**I, the filling or encapsulating layer **85** and the polymer layer **285** are ground or polished by a grinding or polishing process, such as mechanical grinding process, mechanical polishing process or chemical mechanical polishing (CMP) process. Accordingly, top surfaces **14***a* of the metal pillars or bumps **14** and top surfaces **24***a* of the metal pillars or bumps **24** are exposed and are not covered by the filling or encapsulating layer **85** and the polymer layer **285**, and the top surfaces **24***a* of the metal pillars or bumps **24** are substantially coplanar with the top surfaces **14***a* of the metal pillars or bumps **14**, with a top surface **85***a* of the filling or encapsulating layer **85**, and with a top surface **285***b* of the polymer layer **285**. The specification of the metal pillars or bumps **14** and **24**, after the grinding or polishing process, illustrated in FIG. **107**I can be referred to as the specification of the metal pillars or bumps **14** and **24**, after the grinding or polishing process, as illustrated in FIG. **12**, respectively.

[0606] Next, referring to FIG. **107**J, the steps illustrated in FIGS. **13**-**18** can be performed to provide the previously described patterned metal layer **3** and the previously described metal pillars or bumps **34** formed on the patterned metal layer **3**. The patterned metal layer **3** is formed on the top surface **85***a* of the filling or encapsulating layer **85**, on the top surface **285***b* of the polymer layer **285**, on the top surfaces **24***a* of the metal pillars or bumps **24** and on the top surfaces **14***a* of the metal pillars or bumps **14**, and is composed of the previously described adhesion layer **31** on the top surfaces **85***a*, **285***b*, **24***a* and **14***a*, the previously described seed layer **32** on the adhesion layer **31** and the previously described metal layer **33** on the seed layer **32**.

[0607] Next, the steps illustrated in FIGS. **19**-**52** can be performed, except of using the chips **130** illustrated in FIG. **107**E instead of the chips **130** illustrated in FIG. **19** and using the chips **140** illustrated in FIG. **107**F instead of the chips **140** illustrated in FIG. **29**, to provide a plurality of the system-in package or multichip module shown in FIG. **107**K. The system-in package or multichip module shown in FIG. **107**K can be connected to a mother board, a printed circuit board, a metal substrate, a glass substrate or a ceramic substrate using the solder bumps or balls **29***a*. Alternatively, the substrate **110** of the system-in package or multichip module shown in FIG. **107**K can be replaced by a ball-grid-array (BGA) substrate or a print circuit board (PCB), that is, the solder bumps or balls **845** illustrated in FIG. **104** can be formed on a bottom surface of the substrate **110** after the step illustrated in FIG. **39**, and then a singulation process can be performed to cut the substrate **110**, the filling or encapsulating layers **85**, **86** and **87** and the thermal spreading plane **8** and to singularize a plurality of the system-in package or multichip module shown in FIG. **107**L. The patterned metal layer **1** of the system-in package or multichip module shown in FIG. **107**L can be connected to the solder bumps or balls **845** through multiple metal layers in the substrate **110**. The system-in package or multichip module shown in FIG. **107**L can be connected to a mother board, a printed circuit board, a metal substrate, a glass substrate or a ceramic substrate using the solder bumps or balls **845**.

[0608] FIGS. **108**A-**108**F show a process for forming another system-in package or multichip module according to another embodiment of the present disclosure. Referring to FIG. **108**A, multiple chips **120** can be attached to a surface **111** of a substrate **110***a*, for example, by sucking the chips **120** using a vacuum through holes in the substrate **110***a*, or by first coating a glue material, such as polyimide, benzocyclobutane (BCB), polybenzoxazole (PBO), poly-phenylene oxide (PPO), epoxy, silosane or SU-8, on the surface **111** of the substrate **110***a* and then placing the chips **120** on the glue material.

[0609] The chips **120** shown in FIG. **108**A are similar to the chips **120** shown in FIGS. **8** and **9** except that the patterned metal layer **2** and the metal pillars or bumps **24** are not

formed. Any of the chips **120** can be a central-processing-unit (CPU) chip, a baseband chip, a digital-signal-processing (DSP) chip, a graphics-processing-unit (GPU) chip, a memory chip, such as flash memory chip, dynamic-random-access-memory (DRAM) chip or statistic-random-access-memory (SRAM) chip, a wireless local area network (WLAN) chip, a logic chip, an analog chip, a power device, a regulator, a power management device, a global-positioning-system (GPS) chip, a Bluetooth chip, or a chip comprising a central-processing-unit (CPU) circuit block, a graphics-processing-unit (GPU) circuit block, a baseband circuit block, a digital-signal-processing (DSP) circuit block, a memory circuit block, a Bluetooth circuit block, a global-positioning-system (GPS) circuit block, a wireless local area network (WLAN) circuit block and a modem circuit block.

[0610] Each of the chips **120** shown in FIG. **108**A has the passivation layer **25** and the metal traces or pads **26**, under the top surface of the semiconductor substrate **20**, at a top side of each chip **120**. The bottom surface of the semiconductor substrate **20** is at a backside of each chip **120**. The top sides of the chips **120** are attached to the surface **111** of the substrate **110***a*.

[0611] Next, referring to FIG. **108**B, a molding layer **385** is formed on the surface **111** of the substrate **110***a*, between the neighboring two chips **120** and on the backsides and sidewalls of the chips **120** by using a molding process. The backsides of the chips **120** are covered by the molding layer **385**. The top surface **385***a* of the molding layer **385** is substantially flat. The molding layer **385** may have a left sidewall and a right sidewall opposite to and substantially parallel with the left saidewall. The molding layer **385** may have a thickness T**5** greater than 100 micrometers, such as between 150 and 300 micrometers or between 200 and 400 micrometers. The molding layer **385** can be a polymer layer, such as polyimide or epoxy layer having a coefficient of thermal expansion between 2 and 10 or between 5 and 15.

[0612] Next, referring to FIG. **108**C, the substrate **110***a* is removed from the top sides of the chips **120** and from the molding layer **385**, and then the semifinished device can be flipped over to perform the following steps. The molding layer **385** may have a surface **385***b* opposite to the top surface **385***a*. Preferably, the surface **385***b* may be substantially coplanar with the top surfaces **25***t* of the passivation layers **25** of the chips **120**.

[0613] Next, referring to FIG. **108**D, the steps illustrated in FIGS. **13-18** can be performed to provide the previously described patterned metal layer **3** and the previously described metal pillars or bumps **34** on the patterned metal layer **3**. The patterned metal layer **3** can be formed on multiple contact points, exposed by the openings **25***a* in the passivation layer **25**, of the metal traces or pads **26** of each chip **120**, on the surface **385***b* of the molding layer **385**, and on the top surface **25***t* of the passivation layer **25** of each chip **120**.

[0614] The patterned metal layer **3** can be composed of the previously described adhesion layer **31**, the previously described seed layer **32** on the adhesion layer **31**, and the previously described metal layer **33** on the seed layer **32**. The sidewalls of the metal layer **33** are not covered by the adhesion layer **31** and the seed layer **32**. The adhesion layer **31** can be formed on the contact points, exposed by the openings **25***a* in the passivation layer **25**, of the metal traces or pads **26** of each chip **120**, on the surface **385***b* of the molding layer **385**, and on the top surface **25***t* of the passivation layer **25** of each chip **120**.

[0615] For example, the adhesion layer **31** can be a titanium-containing layer, such as a single layer of titanium-tungsten alloy, titanium or titanium nitride, having a thickness smaller than 1 micrometer, such as between 1 nanometer and 0.5 micrometers, on the contact points, exposed by the openings **25***a* in the passivation layer **25**, of the metal traces or pads **26** of each chip **120**, on the surface **385***b* of the molding layer **385**, and on the top surface **25***t* of the passivation layer **25** of each chip **120**. The seed layer **32** can be a single layer of copper or titanium-copper alloy with a thickness smaller than 1 micrometer, such as between 10 nanometers and 0.8 micrometers, on the titanium-containing layer. The metal layer **33** can be an electroplated copper layer having a thickness between 2 and 30 micrometers, and preferably between 3 and 10 micrometers, on the single layer of copper or titanium-copper alloy. The sidewalls of the electroplated copper layer are not covered by the titanium-containing layer and the single layer of copper or titanium-copper alloy. The metal pillars or bumps **34** can be copper pillars or bumps having a height or thickness greater than 15 micrometers, such as between 15 and 520 micrometers, and preferably between 20 and 110 micrometers, on the electroplated copper layer.

[0616] Alternatively, the adhesion layer **31** can be a tantalum-containing layer, such as a single layer of tantalum or tantalum nitride, having a thickness smaller than 1 micrometer, such as between 1 nanometer and 0.5 micrometers, on the contact points, exposed by the openings **25***a* in the passivation layer **25**, of the metal traces or pads **26** of each chip **120**, on the surface **385***b* of the molding layer **385**, and on the top surface **25***t* of the passivation layer **25** of each chip **120**. The seed layer **32** can be a single layer of copper or titanium-copper alloy with a thickness smaller than 1 micrometer, such as between 10 nanometers and 0.8 micrometers, on the tantalum-containing layer. The metal layer **33** can be an electroplated copper layer having a thickness between 2 and 30 micrometers, and preferably between 3 and 10 micrometers, on the single layer of copper or titanium-copper alloy. The sidewalls of the electroplated copper layer are not covered by the tantalum-containing layer and the single layer of copper or titanium-copper alloy. The metal pillars or bumps **34** can be copper pillars or bumps having a height or thickness greater than 15 micrometers, such as between 15 and 520 micrometers, and preferably between 20 and 110 micrometers, on the electroplated copper layer.

[0617] Next, referring to FIG. **108**E, the steps illustrated in FIGS. **19-21** can be performed to provide the previously described chips **130** attached to the metal layer **33** of the patterned metal layer **3** by the glue material **81**, and provide the previously described filling or encapsulating layer **86** formed on the surface **385***b* of the molding layer **385**, on the top surface **25***t* of the passivation layer **25** of each chip **120**, on the metal layer **33** of the patterned metal layer **3**, on the chips **130**, on the metal layer **43** of the patterned metal layer **4** and on tops of the metal pillars or bumps **34** and **44** by using a molding process, a spin coating process, a lamination process or a printing process.

[0618] Next, referring to FIG. **108**F, the steps illustrated in FIGS. **22-38** and **76-82** can be performed, then the solder layer **29** is reflowed to form multiple solid solder bumps or balls **29***a* on the metal layer **28** of the under bump metallurgic (UBM) layer by using a reflowing process, and then a singulation process can be performed to cut the molding layer **385**, the filling or encapsulating layers **86** and **87** and the polymer

layers **98** and **540** and to singularize a plurality of the system-in package or multichip module shown in FIG. **108**F.

[0619] The molding layer **385** of the system-in package or multichip module shown in FIG. **108**F may have a left sidewall and a right sidewall opposite to and substantially parallel with the left saidewall. The solder bumps or balls **29***a* may have a bump height greater than 5 micrometers, such as between 5 and 400 micrometers, and preferably between 10 and 100 micrometers, and a width or diameter between 20 and 400 micrometers, and preferably between 50 and 100 micrometers. The solder bumps or balls **29***a* may include bismuth, indium, a tin-lead alloy, a tin-silver alloy, a tin-silver-copper alloy or a tin-gold alloy.

[0620] The structure and the circuit design of the metal traces or pads **26**, **46** or **66** shown in FIG. **108**F can be referred to as the structure and the circuit design of the metal traces or pads **925** as illustrated in FIG. **106**A, that is, the metal traces or pads **26**, **46** or **66**, for example, can be formed by a damascene or double-damascene process including an electroplating process and a chemical mechanical polishing (CMP) process, and can be composed of the electroplated copper layer **743**, the adhesion/barrier layer **741** at the bottom of the electroplated copper layer **743** and at the sidewalls of the electroplated copper layer **743**, and the seed layer **742** between the electroplated copper layer **743** and the adhesion/barrier layer **741**, at the bottom of the electroplated copper layer **743** and at the sidewalls of the electroplated copper layer **743**. The sidewalls of the electroplated copper layer **743** are covered by the adhesion/barrier layer **741** and the seed layer **742**.

[0621] The system-in package or multichip module shown in FIG. **108**F can be connected to a mother board, a printed circuit board, a metal substrate, a glass substrate or a ceramic substrate using the solder bumps or balls **29***a*.

[0622] FIGS. **109**A-**109**T show a process for forming another system-in package or multichip module according to another embodiment of the present disclosure. Referring to FIG. **109**A, multiple chips **120** can be attached to a surface **111** of a substrate **110***a*, for example, by sucking the chips **120** using a vacuum through holes in the substrate **110***a*, or by first coating a glue material, such as polyimide, benzocyclobutane (BCB), polybenzoxazole (PBO), poly-phenylene oxide (PPO), epoxy, silosane or SU-8, on the surface **111** of the substrate **110***a* and then placing the chips **120** on the glue material.

[0623] The chips **120** shown in FIG. **109**A are similar to the chips **120** shown in FIGS. **8** and **9** except that the patterned metal layer **2** and the metal pillars or bumps **24** are not formed. Any of the chips **120** can be a central-processing-unit (CPU) chip, a baseband chip, a digital-signal-processing (DSP) chip, a graphics-processing-unit (GPU) chip, a memory chip, such as flash memory chip, dynamic-random-access-memory (DRAM) chip or statistic-random-access-memory (SRAM) chip, a wireless local area network (WLAN) chip, a logic chip, an analog chip, a power device, a regulator, a power management device, a global-positioning-system (GPS) chip, a Bluetooth chip, or a chip comprising a central-processing-unit (CPU) circuit block, a graphics-processing-unit (GPU) circuit block, a baseband circuit block, a digital-signal-processing (DSP) circuit block, a memory circuit block, a Bluetooth circuit block, a global-positioning-system (GPS) circuit block, a wireless local area network (WLAN) circuit block and a modem circuit block.

[0624] Each of the chips **120** shown in FIG. **109**A has the passivation layer **25** and the metal traces or pads **26**, under the top surface of the semiconductor substrate **20**, at a top side of each chip **120**. The bottom surface of the semiconductor substrate **20** is at a backside of each chip **120**. The top sides of the chips **120** are attached to the surface **111** of the substrate **110***a*.

[0625] Next, referring to FIG. **109**B, a molding layer **385** is formed on the surface **111** of the substrate **110***a*, between the neighboring two chips **120** and on the backsides and sidewalls of the chips **120** by using a molding process. The backsides of the chips **120** are covered by the molding layer **385**. The top surface **385***a* of the molding layer **385** is substantially flat. The molding layer **385** may have a left sidewall and a right sidewall opposite to and substantially parallel with the left saidewall. The molding layer **385** may have a thickness T**5** greater than 100 micrometers, such as between 150 and 300 micrometers or between 200 and 400 micrometers. The molding layer **385** can be a polymer layer, such as polyimide or epoxy layer having a coefficient of thermal expansion between 2 and 10 or between 5 and 15.

[0626] Next, referring to FIG. **109**C, the substrate **110***a* is removed from the top sides of the chips **120** and from the molding layer **385**, and then the semifinished device can be flipped over to perform the following steps. The molding layer **385** may have a surface **385***b* opposite to the top surface **385***a*. Preferably, the surface **385***b* may be substantially coplanar with the top surfaces **25***t* of the passivation layers **25** of the chips **120**.

[0627] Next, referring to FIG. **109**D, the steps illustrated in FIGS. **13** and **14** can be performed, except forming the adhesion layer **31** on multiple contact points, exposed by the openings **25***a* in the passivation layer **25**, of the metal traces or pads **26** of each chip **120**, on the surface **385***b* of the molding layer **385** and on the top surface **25***t* of the passivation layer **25** of each chip **120**. Next, the photoresist layer **92** is removed using a chemical solution containing amine or $NaCO_3$. Next, the seed layer **32** not under the metal layer **33** is removed by using a wet chemical etching process or a reactive ion etching (RIE) process. Next, the adhesion layer **31** not under the metal layer **33** is removed by using a wet chemical etching process or a reactive ion etching (RIE) process. Accordingly, the adhesion layer **31**, the seed layer **32** and the metal layer **33** compose a patterned metal layer **3** formed on the contact points, exposed by the openings **25***a* in the passivation layer **25**, of the metal traces or pads **26** of each chip **120**, on the surface **385***b* of the molding layer **385**, and on the top surface **25***t* of the passivation layer **25** of each chip **120**. The specification of the patterned metal layer **3** shown in FIG. **109**D can be referred to as the specification of the patterned metal layer **3** as illustrated in FIG. **18**.

[0628] The adhesion layer **31**, for example, can be a titanium-containing layer, such as a single layer of titanium-tungsten alloy, titanium or titanium nitride, having a thickness smaller than 1 micrometer, such as between 1 nanometer and 0.5 micrometers, on the contact points, exposed by the openings **25***a* in the passivation layer **25**, of the metal traces or pads **26** of each chip **120**, on the surface **385***b* of the molding layer **385**, and on the top surface **25***t* of the passivation layer **25** of each chip **120**. The seed layer **32** can be a single layer of copper or titanium-copper alloy with a thickness smaller than 1 micrometer, such as between 10 nanometers and 0.8 micrometers, on the titanium-containing layer. The metal layer **33** can be an electroplated copper layer having a thickness between 2 and 30 micrometers, and preferably between 3 and 10 micrometers, on the single layer of copper or tita-

nium-copper alloy. The sidewalls of the electroplated copper layer are not covered by the titanium-containing layer and the single layer of copper or titanium-copper alloy.

[0629] Alternatively, the adhesion layer **31** can be a tantalum-containing layer, such as a single layer of tantalum or tantalum nitride, having a thickness smaller than 1 micrometer, such as between 1 nanometer and 0.5 micrometers, on the contact points, exposed by the openings **25***a* in the passivation layer **25**, of the metal traces or pads **26** of each chip **120**, on the surface **385***b* of the molding layer **385**, and on the top surface **25***t* of the passivation layer **25** of each chip **120**. The seed layer **32** can be a single layer of copper or titanium-copper alloy with a thickness smaller than 1 micrometer, such as between 10 nanometers and 0.8 micrometers, on the tantalum-containing layer. The metal layer **33** can be an electroplated copper layer having a thickness between 2 and 30 micrometers, and preferably between 3 and 10 micrometers, on the single layer of copper or titanium-copper alloy. The sidewalls of the electroplated copper layer are not covered by the tantalum-containing layer and the single layer of copper or titanium-copper alloy.

[0630] Next, referring to FIG. **109**E, an insulating layer **386** can be formed on the metal layer **33** of the patterned metal layer **3**, on the surface **385***b* of the molding layer **385**, and on the top surface **25***t* of the passivation layer **25** of each chip **120**, for example, by using a molding process, a spin coating process, a lamination process or a printing process. The insulating layer **386** can be a polymer layer, such as epoxy layer, polyimide layer, benzocyclobutane (BCB) layer, polybenzoxazole (PBO) layer or poly-phenylene oxide (PPO) layer, having a thickness between 2 and 50 micrometers, and preferably between 5 and 30 micrometers. The top surface **386***a* of the insulating layer **386** may be substantially flat.

[0631] Next, referring to FIG. **109**F, multiple chips **130** can be attached to the top surface **386***a* of the insulating layer **386** by a glue material **81**. The chips **130** illustrated in FIG. **109**F are similar to the chips **130** illustrated in FIGS. **19** and **20** except that the metal pillars or bumps **44** are not formed on the patterned metal layer **4**. The glue material **81** can be a polymer, such as epoxy, polyimide, benzocyclobutane (BCB), polybenzoxazole (PBO) or poly-phenylene oxide (PPO), and may have a thickness greater than 1 micrometers, such as between 3 and 100 micrometers, and preferably between 5 and 50 micrometers. Any of the chips **130** can be a central-processing-unit (CPU) chip, a baseband chip, a digital-signal-processing (DSP) chip, a graphics-processing-unit (GPU) chip, a memory chip, such as flash memory chip, dynamic-random-access-memory (DRAM) chip or statistic-random-access-memory (SRAM) chip, a wireless local area network (WLAN) chip, a global-positioning-system (GPS) chip, a logic chip, an analog chip, a power device, a regulator, a power management device, a Bluetooth chip, or a chip comprising a central-processing-unit (CPU) circuit block, a graphics-processing-unit (GPU) circuit block, a baseband circuit block, a digital-signal-processing (DSP) circuit block, a memory circuit block, a Bluetooth circuit block, a global-positioning-system (GPS) circuit block, a wireless local area network (WLAN) circuit block and a modem circuit block.

[0632] Next, referring to FIG. **109**G, an insulating layer **387** can be formed on the top surface **386***a* of the insulating layer **386**, on the metal layer **43** of the patterned metal layer **4** of each chip **130**, on the chips **130** and between the neighboring two chips **130**, for example, by using a molding process, a spin coating process, a lamination process or a printing process. The chips **130** are covered by the insulating layer **387**. The insulating layer **387** can be a polymer layer, such as epoxy layer, polyimide layer, benzocyclobutane (BCB) layer, polybenzoxazole (PBO) layer or poly-phenylene oxide (PPO) layer, having a thickness greater than 5 micrometers, such as between 10 and 300 micrometers or between 15 and 200 micrometers. The top surface **387***a* of the insulating layer **387** may be substantially flat.

[0633] Next, referring to FIG. **109**H, using a laser drill process or a dry etching process, multiple openings (or vias) **138***a* are formed in and through the insulating layers **386** and **387** to expose multiple contact points of the metal layer **33** of the patterned metal layer **3**, and multiple openings (or vias) **138***b* are formed in and through the insulating layer **387** to expose multiple contact points of the metal layer **43** of the patterned metal layer **4**.

[0634] Next, referring to FIG. **109**I, an adhesion layer **51** having a thickness smaller than 1 micrometer, such as between 1 nanometer and 0.5 micrometers, can be formed on the top surface **387***a* of the insulating layer **387**, in the openings **138***a* and **138***b* and on the contact points, exposed by the openings **138***a* and **138***b*, of the metal layers **33** and **43** by using a physical-vapor deposition (PVD) process, such as sputtering process or evaporation process. Next, a seed layer **52** having a thickness smaller than 1 micrometer, such as between 10 nanometers and 0.8 micrometers, can be formed on the adhesion layer **51** and in the openings **138***a* and **138***b* by using a physical-vapor deposition (PVD) process, such as sputtering process or evaporation process. Next, a photoresist layer **94** can be formed on the seed layer **52**. Next, the photoresist layer **94** is patterned with processes of lithographic, light exposure and development to form multiple openings **94***a* in the photoresist layer **94** exposing the seed layer **52**.

[0635] The material of the adhesion layer **51** may include titanium, a titanium-tungsten alloy, titanium nitride, chromium, tantalum or tantalum nitride. The material of the seed layer **52** may include copper, titanium-copper alloy, gold or nickel.

[0636] For example, the adhesion layer **51** can be formed by sputtering a titanium-containing layer, such as a single layer of titanium-tungsten alloy, titanium or titanium nitride, having a thickness smaller than 1 micrometer, such as between 1 nanometer and 0.5 micrometers, on the top surface **387***a* of the insulating layer **387**, in the openings **138***a* and **138***b* and on the contact points, exposed by the openings **138***a* and **138***b*, of the metal layers **33** and **43**. And the seed layer **52** can be formed by sputtering a copper layer, a titanium-copper-alloy layer, a gold layer or a nickel layer with a thickness smaller than 1 micrometer, such as between 10 nanometers and 0.8 micrometers, on the titanium-containing layer and in the openings **138***a* and **138***b*.

[0637] Alternatively, the adhesion layer **51** can be formed by sputtering a tantalum-containing layer, such as a single layer of tantalum or tantalum nitride, having a thickness smaller than 1 micrometer, such as between 1 nanometer and 0.5 micrometers, on the top surface **387***a* of the insulating layer **387**, in the openings **138***a* and **138***b* and on the contact points, exposed by the openings **138***a* and **138***b*, of the metal layers **33** and **43**. And the seed layer **52** can be formed by sputtering a copper layer, a titanium-copper-alloy layer, a gold layer or a nickel layer with a thickness smaller than 1 micrometer, such as between 10 nanometers and 0.8 micrometers, on the tantalum-containing layer and in the openings **138***a* and **138***b*.

[0638] Next, referring to FIG. **109**J, a metal layer **53** having a thickness greater than 1 micrometer, such as between 2 and 30 micrometers, and preferably between 3 and 10 micrometers, can be formed on the seed layer **52** exposed by the openings **94***a* by using a process including an electroplating process and/or an electroless plating process. Alternatively, the metal layer **53** may be further formed in the openings **138***a* and **138***b*. The metal layer **53** can be a single layer of copper, gold or nickel, or a composite layer including a copper layer having a thickness between 2 and 30 micrometers, a nickel layer having a thickness between 0.1 and 10 micrometers on the copper layer, and a gold layer having a thickness between 0.01 and 5 micrometers on the nickel layer. For example, the metal layer **53** can be a single metal layer formed by electroplating a copper layer, to a thickness greater than 1 micrometer, such as between 2 and 30 micrometers, and preferably between 3 and 10 micrometers, in the openings **94***a* and on the seed layer **52**, preferably the previously described copper or titanium-copper-alloy seed layer **52**, exposed by the openings **94***a*.

[0639] Next, referring to FIG. **109**K, the photoresist layer **94** is removed using a chemical solution containing amine or $NaCO_3$. Next, the seed layer **52** not under the metal layer **53** is removed by using a wet chemical etching process or a reactive ion etching (RIE) process. Next, the adhesion layer **51** not under the metal layer **53** is removed by using a wet chemical etching process or a reactive ion etching (RIE) process.

[0640] Accordingly, the adhesion layer **51**, the seed layer **52** and the metal layer **53** compose a patterned metal layer **5**, multiple metal plugs (or metal vias) **5***m* and multiple metal plugs (or metal vias) **5***p*. The patterned metal layer **5**, composed of the adhesion layer **51**, the seed layer **52** and the metal layer **53**, can be formed on the top surface **387***a* of the insulating layer **387**. The metal plugs **5***m*, composed of the adhesion layer **51** and the seed layer **52** or composed of the adhesion layer **51**, the seed layer **52** and the metal layer **53**, can be formed in the openings **138***a* and on the contact points, exposed by the openings **138***a*, of the metal layer **33** of the patterned metal layer **3**. The metal plugs **5***m* between the patterned metal layer **5** and the contact points, exposed by the openings **138***a*, of the metal layer **33** can connect the patterned metal layer **5** to the contact points, exposed by the openings **138***a*, of the metal layer **33**. The metal plugs **5***p*, composed of the adhesion layer **51** and the seed layer **52** or composed of the adhesion layer **51**, the seed layer **52** and the metal layer **53**, can be formed in the openings **138***b* and on the contact points, exposed by the openings **138***b*, of the metal layer **43** of the patterned metal layer **4**. The metal plugs **5***p* between the patterned metal layer **5** and the contact points, exposed by the openings **138***b*, of the metal layer **43** can connect the patterned metal layer **5** to the contact points, exposed by the openings **138***b*, of the metal layer **43**.

[0641] Next, referring to FIG. **109**L, an insulating layer **388** can be formed on the metal layer **53** of the patterned metal layer **5** and on the top surface **387***a* of the insulating layer **387**, for example, by using a molding process, a spin coating process, a lamination process or a printing process. The insulating layer **388** can be a polymer layer, such as epoxy layer, polyimide layer, benzocyclobutane (BCB) layer, polybenzoxazole (PBO) layer or poly-phenylene oxide (PPO) layer, having a thickness between 2 and 50 micrometers, and preferably between 5 and 30 micrometers. The top surface **388***a* of the insulating layer **388** may be substantially flat.

[0642] Next, referring to FIG. **109**M, multiple chips **140** can be attached to the top surface **388***a* of the insulating layer **388** by a glue material **82**. The chips **140** illustrated in FIG. **109**M are similar to the chips **140** illustrated in FIGS. **29** and **30** except that the metal pillars or bumps **64** are not formed on the patterned metal layer **6**. The glue material **82** can be a polymer, such as epoxy, polyimide, benzocyclobutane (BCB), polybenzoxazole (PBO) or poly-phenylene oxide (PPO), and may have a thickness greater than 1 micrometers, such as between 3 and 100 micrometers, and preferably between 5 and 50 micrometers. Any of the chips **140** can be a central-processing-unit (CPU) chip, a baseband chip, a digital-signal-processing (DSP) chip, a graphics-processing-unit (GPU) chip, a memory chip, such as flash memory chip, dynamic-random-access-memory (DRAM) chip or statistic-random-access-memory (SRAM) chip, a wireless local area network (WLAN) chip, a global-positioning-system (GPS) chip, a logic chip, an analog chip, a power device, a regulator, a power management device, a Bluetooth chip, or a chip comprising a central-processing-unit (CPU) circuit block, a graphics-processing-unit (GPU) circuit block, a baseband circuit block, a digital-signal-processing (DSP) circuit block, a memory circuit block, a Bluetooth circuit block, a global-positioning-system (GPS) circuit block, a wireless local area network (WLAN) circuit block and a modem circuit block.

[0643] Next, referring to FIG. **109**N, an insulating layer **389** can be formed on the top surface **388***a* of the insulating layer **388**, on the metal layer **63** of the patterned metal layer **6** of each chip **140**, on the chips **140** and between the neighboring two chips **140**, for example, by using a molding process, a spin coating process, a lamination process or a printing process. The chips **140** are covered by the insulating layer **389**. The insulating layer **389** can be a polymer layer, such as epoxy layer, polyimide layer, benzocyclobutane (BCB) layer, polybenzoxazole (PBO) layer or poly-phenylene oxide (PPO) layer, having a thickness greater than 5 micrometers, such as between 10 and 300 micrometers or between 15 and 200 micrometers. The top surface **389***a* of the insulating layer **389** may be substantially flat.

[0644] Next, referring to FIG. **109**O, using a laser drill process or a dry etching process, multiple openings (or vias) **238***a* are formed in and through the insulating layers **388** and **389** to expose multiple contact points of the metal layer **53** of the patterned metal layer **5**, and multiple openings (or vias) **238***b* are formed in and through the insulating layer **389** to expose multiple contact points of the metal layer **63** of the patterned metal layer **6**.

[0645] Next, referring to FIG. **109**P, an adhesion layer **71** having a thickness smaller than 1 micrometer, such as between 1 nanometer and 0.5 micrometers, can be formed on the top surface **389***a* of the insulating layer **389**, in the openings **238***a* and **238***b* and on the contact points, exposed by the openings **238***a* and **238***b*, of the metal layers **53** and **63** by using a physical-vapor deposition (PVD) process, such as sputtering process or evaporation process. Next, a seed layer **72** having a thickness smaller than 1 micrometer, such as between 10 nanometers and 0.8 micrometers, can be formed on the adhesion layer **71** and in the openings **238***a* and **238***b* by using a physical-vapor deposition (PVD) process, such as sputtering process or evaporation process. Next, a photoresist layer **96** can be formed on the seed layer **72**. Next, the photoresist layer **96** is patterned with processes of lithographic, light exposure and development to form multiple openings **96***a* in the photoresist layer **96** exposing the seed layer **72**.

[0646] The material of the adhesion layer **71** may include titanium, a titanium-tungsten alloy, titanium nitride, chromium, tantalum or tantalum nitride. The material of the seed layer **72** may include copper, titanium-copper alloy, gold or nickel.

[0647] For example, the adhesion layer **71** can be formed by sputtering a titanium-containing layer, such as a single layer of titanium-tungsten alloy, titanium or titanium nitride, having a thickness smaller than 1 micrometer, such as between 1 nanometer and 0.5 micrometers, on the top surface **389***a* of the insulating layer **389**, in the openings **238***a* and **238***b* and on the contact points, exposed by the openings **238***a* and **238***b*, of the metal layers **53** and **63**. And the seed layer **72** can be formed by sputtering a copper layer, a titanium-copper-alloy layer, a gold layer or a nickel layer with a thickness smaller than 1 micrometer, such as between 10 nanometers and 0.8 micrometers, on the titanium-containing layer and in the openings **238***a* and **238***b*.

[0648] Alternatively, the adhesion layer **71** can be formed by sputtering a tantalum-containing layer, such as a single layer of tantalum or tantalum nitride, having a thickness smaller than 1 micrometer, such as between 1 nanometer and 0.5 micrometers, on the top surface **389***a* of the insulating layer **389**, in the openings **238***a* and **238***b* and on the contact points, exposed by the openings **238***a* and **238***b*, of the metal layers **53** and **63**. And the seed layer **72** can be formed by sputtering a copper layer, a titanium-copper-alloy layer, a gold layer or a nickel layer with a thickness smaller than 1 micrometer, such as between 10 nanometers and 0.8 micrometers, on the tantalum-containing layer and in the openings **238***a* and **238***b*.

[0649] Next, referring to FIG. **109**Q, a metal layer **73** having a thickness greater than 1 micrometer, such as between 2 and 30 micrometers, and preferably between 3 and 10 micrometers, can be formed on the seed layer **72** exposed by the openings **96***a* by using a process including an electroplating process and/or an electroless plating process. Alternatively, the metal layer **73** may be further formed in the openings **238***a* and **238***b*. The metal layer **73** can be a single layer of copper, gold or nickel, or a composite layer including a copper layer having a thickness between 2 and 30 micrometers, a nickel layer having a thickness between 0.1 and 10 micrometers on the copper layer, and a gold layer having a thickness between 0.01 and 5 micrometers on the nickel layer. For example, the metal layer **73** can be a single metal layer formed by electroplating a copper layer, to a thickness greater than 1 micrometer, such as between 2 and 30 micrometers, and preferably between 3 and 10 micrometers, in the openings **96***a* and on the seed layer **72**, preferably the previously described copper or titanium-copper-alloy seed layer **72**, exposed by the openings **96***a*.

[0650] Next, referring to FIG. **109**R, the photoresist layer **96** is removed using a chemical solution containing amine or $NaCO_3$. Next, the seed layer **72** not under the metal layer **73** is removed by using a wet chemical etching process or a reactive ion etching (RIE) process. Next, the adhesion layer **71** not under the metal layer **73** is removed by using a wet chemical etching process or a reactive ion etching (RIE) process.

[0651] Accordingly, the adhesion layer **71**, the seed layer **72** and the metal layer **73** compose a patterned metal layer **7**, multiple metal plugs **7***m* and multiple metal plugs **7***p*. The patterned metal layer **7**, composed of the adhesion layer **71**, the seed layer **72** and the metal layer **73**, can be formed on the top surface **389***a* of the insulating layer **389**. The metal plugs **7***m*, composed of the adhesion layer **71** and the seed layer **72** or composed of the adhesion layer **71**, the seed layer **72** and the metal layer **73**, can be formed in the openings **238***a* and on the contact points, exposed by the openings **238***a*, of the metal layer **53** of the patterned metal layer **5**. The metal plugs **7***m* between the patterned metal layer **7** and the contact points, exposed by the openings **238***a*, of the metal layer **53** can connect the patterned metal layer **7** to the contact points, exposed by the openings **238***a*, of the metal layer **53**. The metal plugs **7***p*, composed of the adhesion layer **71** and the seed layer **72** or composed of the adhesion layer **71**, the seed layer **72** and the metal layer **73**, can bee formed in the openings **238***b* and on the contact points, exposed by the openings **238***b*, of the metal layer **63** of the patterned metal layer **6**. The metal plugs **7***p* between the patterned metal layer **7** and the contact points, exposed by the openings **238***b*, of the metal layer **63** can connect the patterned metal layer **7** to the contact points, exposed by the openings **238***b*, of the metal layer **63**.

[0652] Referring to FIG. **109**S, after the step illustrated in FIG. **109**R, a polymer layer **98** can be formed on the metal layer **73** of the patterned metal layer **7** and on the top surface **389***a* of the insulating layer **389**, and multiple openings **98***a* in the polymer layer **98** are over multiple contact points of the metal layer **73** of the patterned metal layer **7** and expose them. The polymer layer **98** can be a polyimide layer, a polybenzoxazole (PBO) layer, a benzocyclobutane (BCB) layer, an epoxy layer, or a poly-phenylene oxide (PPO) layer, and may have a thickness between 1 and 30 micrometers, and preferably between 2 and 15 micrometers or between 5 and 10 micrometers.

[0653] Next, referring to FIG. **109**T, multiple solder bumps or balls **29***a* and an under bump metallurgic (UBM) layer composed of the previously described adhesion layer **18**, seed layer **19** and metal layers **27** and **28** are formed over the contact points, exposed by the openings **98***a*, of the patterned metal layer **7**, and then a singulation process can be performed to cut the molding layer **385**, the insulating layers **386**-**389** and the polymer layer **98** and to singularize a plurality of the system-in package or multichip module shown in FIG. **109**T. The under bump metallurgic (UBM) layer can be formed on the polymer layer **98** and on the contact points, exposed by the openings **98***a*, of the metal layer **73**, and the solder bumps or balls **29***a* can be formed on the under bump metallurgic (UBM) layer. The process for forming the under bump metallurgic (UBM) layer and the solder bumps or balls **29***a* as illustrated in FIG. **109**T is similar to that as illustrated in FIGS. **80**-**83** except that the adhesion layer **18** of the under bump metallurgic (UBM) layer is formed on the polymer layer **98** and on the contact points, exposed by the openings **98***a*, of the metal layer **73**.

[0654] The molding layer **385** of the system-in package or multichip module shown in FIG. **109**T may have a left sidewall and a right sidewall opposite to and substantially parallel with the left saidewall. The solder bumps or balls **29***a* may have a bump height greater than 5 micrometers, such as between 5 and 400 micrometers, and preferably between 10 and 100 micrometers, and a width or diameter between 20 and 400 micrometers, and preferably between 50 and 100 micrometers. The solder bumps or balls **29***a* may include bismuth, indium, a tin-lead alloy, a tin-silver alloy, a tin-silver-copper alloy or a tin-gold alloy. The system-in package or multichip module shown in FIG. **109**T can be connected to

a mother board, a printed circuit board, a metal substrate, a glass substrate or a ceramic substrate using the solder bumps or balls **29***a*.

[0655] Regarding the system-in package or multichip module illustrated in FIG. **109**T, the chips **130** can be connected to each other through the metal plugs **5***p* and the patterned metal layer **5**, and can be connected to the chips **120** through, in sequence, the metal plugs **5***p*, the patterned metal layer **5**, the metal plugs **5***m* and the patterned metal layer **3**. The chips **120** may be connected to each other through the patterned metal layer **3**. The chips **140** can be connected to each other through the metal plugs **7***p* and the patterned metal layer **7**, can be connected to the chips **130** through, in sequence, the metal plugs **7***p*, the patterned metal layer **7**, the metal plugs **7***m*, the patterned metal layer **5** and the metal plugs **5***p*, and can be connected to the chips **120** through, in sequence, the metal plugs **7***p*, the patterned metal layer **7**, the metal plugs **7***m*, the patterned metal layer **5**, the metal plugs **5***m* and the patterned metal layer **3**.

[0656] The patterned metal layer **3** of the system-in package or multichip module illustrated in FIG. **109**T may include multiple metal interconnects or traces, such as signal traces, clock buses, clock traces, power planes, power buses, power traces, ground planes, ground buses or ground traces. One of the chips **120**, for example, may have one of the metal traces or pads **26** connected to one or more of the metal traces or pads **26** of another one of the chips **120** through one or more of the metal interconnects or traces provided by the patterned metal layer **3**.

[0657] The patterned metal layer **5** of the system-in package or multichip module illustrated in FIG. **109**T may include multiple metal interconnects or traces, such as signal traces, clock buses, clock traces, power planes, power buses, power traces, ground planes, ground buses or ground traces. One of the chips **130**, for example, may have one of the metal traces or pads **46** connected to one of the metal traces or pads **26** of one of the chips **120** through, in sequence, the patterned metal layer **4**, one of the metal plugs **5***p*, one of the metal interconnects or traces provided by the patterned metal layer **5**, one of the metal plugs **5***m*, and the patterned metal layer **3**, and may have another one of the metal traces or pads **46** connected to one of the metal traces or pads **66** of one of the chips **140** through, in sequence, the patterned metal layer **4**, another one of the metal plugs **5***p*, another one of the metal interconnects or traces provided by the patterned metal layer **5**, one of the metal plugs **7***m*, the patterned metal layer **7**, one of the metal plugs **7***p* and the patterned metal layer **6**. One of the chips **130**, for example, may be connected to another one of the chips **130** through one or more of the metal interconnects or traces provided by the patterned metal layer **5**.

[0658] The patterned metal layer **7** of the system-in package or multichip module illustrated in FIG. **109**T may include multiple metal interconnects or traces, such as signal traces, clock buses, clock traces, power planes, power buses, power traces, ground planes, ground buses or ground traces. One of the chips **140**, for example, may have one of the metal traces or pads **66** connected to one of the metal traces or pads **26** of one of the chips **120** through, in sequence, the patterned metal layer **6**, one of the metal plugs **7***p*, one of the metal interconnects or traces provided by the patterned metal layer **7**, one of the metal plugs **7***m*, the patterned metal layer **5**, one of the metal plugs **5***m* and the patterned metal layer **3**, and may have another one of the metal traces or pads **66** connected to one of the metal traces or pads **46** of one of the chips **130** through, in sequence, the patterned metal layer **6**, another one of the metal plugs **7***p*, another one of the metal interconnects or traces provided by the patterned metal layer **7**, another one of the metal plugs **7***m*, the patterned metal layer **5**, one of the metal plugs **5***p* and the patterned metal layer **4**. One of the chips **140**, for example, may be connected to another one of the chips **140** through one or more of the metal interconnects or traces provided by the patterned metal layer **7**.

[0659] FIG. **109**U shows a schematic top perspective view of the patterned metal layer **5** of the system-in package or multichip module shown in FIG. **109**T, and FIG. **109**T can be a cross-sectional view cut along the line B-B' shown in FIG. **109**U. Referring to FIGS. **109**T and **109**U, the system-in package or multichip module may include multiple metal interconnects or traces **5***s*, **5***t*, **5***u*, **5***v* and **5***w* provided by the patterned metal layer **5**. No matter where the metal interconnects or traces **5***s*, **5***t*, **5***u*, **5***v* and **5***w* are formed, any one of the metal interconnects or traces **5***s*, **5***t*, **5***u*, **5***v* and **5***w* can be a signal trace, a clock bus, a clock trace, a power plane, a power bus, a power trace, a ground plane, a ground bus or a ground trace. The left chip **130** has an edge **130***a* and an edge **130***b* opposite to and substantially parallel with the edge **130***a*. The right chip **130** has an edge **130***c* and an edge **130***d* opposite to and substantially parallel with the edge **130***c*. The metal interconnects or traces **5***s* can extend across the edge **130***a* of the left chip **130**, and the metal interconnects or traces **51** can extend across the edge **130***b* of the left chip **130**. The metal interconnects or traces **5***u* can extend across the edge **130***c* of the right chip **130**, and the metal interconnects or traces **5***v* can extend across the edge **130***d* of the right chip **130**. The metal interconnect or trace **5***w* can extend across the edge **130***b* of the left chip **130** and across the edge **130***c* of the right chip **130**.

[0660] The metal interconnects or traces **5***s*, **5***t*, **5***u*, **5***v* and **5***w* can be connected to the metal plugs **5***m*, and can be connected to the metal traces or pads **26** of the chips **120** through, in sequence, the metal plugs **5***m* and the patterned metal layer **3**. Furthermore, the metal interconnects or traces **5***s*, **5***t*, **5***u*, **5***v* and **5***w* can be connected to the metal plugs **7***m*, and can be connected to the metal traces or pads **66** of the chips **140** through, in sequence, the metal plugs **7***m*, the patterned metal layer **7** and the metal plugs **7***p*.

[0661] The left chip **130** may include multiple metal interconnects or traces **4***a*, **4***b* and **4***c* provided by the patterned metal layer **4** of the left chip **130**. No matter where the metal interconnects or traces **4***a*, **4***b* and **4***c* are formed, any one of the metal interconnects or traces **4***a*, **4***b* and **4***c* can be a signal trace, a clock bus, a clock trace, a power plane, a power bus, a power trace, a ground plane, a ground bus or a ground trace.

[0662] The right chip **130** may include multiple metal interconnects or traces **4***d*, **4***e*, **4***f* and **4***g* provided by the patterned metal layer **4** of the right chip **130**. No matter where the metal interconnects or traces **4***d*, **4***e*, **4***f* and **4***g* are formed, any one of the metal interconnects or traces **4***d*, **4***e*, **4***f* and **4***g* can be a signal trace, a clock bus, a clock trace, a power plane, a power bus, a power trace, a ground plane, a ground bus or a ground trace.

[0663] The left chip **130** has multiple contact points **46***a*, **46***b* and **46***g* arranged in a center area of the left chip **130**. Alternatively, the contact point **46***g* may be arranged in a peripheral area of the left chip **130**. The contact points **46***a*, **46***b* and **46***g* are provided by the metal traces or pads **46** of the left chip **130**. The openings **45***a* in the passivation layer **45** of the left chip **130** are over the contact points **46***a*, **46***b* and **46***g*

and expose the contact points **46***a*, **46***b* and **46***g*, and the contact points **46***a*, **46***b* and **46***g* are at bottoms of the openings **45***a* in the passivation layer **45** of the left chip **130**.

[0664] The right chip **130** has multiple contact points **46***c* and **46***d* arranged in a center area of the right chip **130**, and multiple contact points **46***e*, **46***f* and **46***h* arranged in a peripheral area of the right chip **130**. Alternatively, the contact point **46***h* may be arranged in the center area of the right chip **130**. The contact points **46***c*, **46***d*, **46***e*, **46***f* and **46***h* are provided by the metal traces or pads **46** of the right chip **130**. The openings **45***a* in the passivation layer **45** of the right chip **130** are over the contact points **46***c*, **46***d*, **46***e*, **46***f* and **46***h* and expose the contact points **46***c*, **46***d*, **46***e*, **46***f* and **46***h*, and the contact points **46***c*, **46***d*, **46***e*, **46***f* and **46***h* are at bottoms of the openings **45***a* in the passivation layer **45** of the right chip **130**.

[0665] The contact points **46***a* can be arranged in a first line in the center area of the left chip **130**, and the contact points **46***b* can be arranged in a second line, parallel with the first line, in the center area of the left chip **130**. The contact points **46***c* can be arranged in a third line in the center area of the right chip **130**, and the contact points **46***d* can be arranged in a fourth line, parallel with the third line, in the center area of the right chip **130**. The contact points **46***e* can be arranged in a fifth line, parallel with the third line, in the peripheral area of the right chip **130**. The contact points **46***f* can be arranged in a sixth line, parallel with the third line, in the peripheral area of the right chip **130**.

[0666] Each of the contact points **46***a* can be connected to one of the metal plugs **5***m* through, in sequence, one of the metal interconnects or traces **4***a*, one of the metal plugs **5***p* and one of the metal interconnects or traces **5***s*. From the top perspective view, the positions of the contact points **46***a* are different from the positions of the metal plugs **5***m* and **5***p* that connect with the contact points **46***a*.

[0667] Each of the contact points **46***b* can be connected to one of the metal plugs **7***m* through, in sequence, one of the metal interconnects or traces **4***b*, one of the metal plugs **5***p* and one of the metal interconnects or traces **5***t*. From the top perspective view, the positions of the contact points **46***b* are different from the positions of the metal plugs **7***m* which connect that the contact points **46***b*.

[0668] Each of the contact points **46***e* can be connected to one of the metal plugs **5***m* through, in sequence, one of the metal interconnects or traces **4***d*, one of the metal plugs **5***p* and one of the metal interconnects or traces **5***u*. From the top perspective view, the positions of the contact points **46***e* are different from the positions of the metal plugs **5***m* that connect with the contact points **46***e*.

[0669] Each of the contact points **46***f* can be connected to one of the metal plugs **7***m* through, in sequence, one of the metal interconnects or traces **4***e*, one of the metal plugs **5***p* and one of the metal interconnects or traces **5***v*. From the top perspective view, the positions of the contact points **46***f* are different from the positions of the metal plugs **7***m* that connect with the contact points **46***f*.

[0670] The contact points **46***c* can be connected to the contact points **46***d* through the metal interconnects or traces **4***f*. The contact point **46***g* of the left chip **130** can be connected to the contact point **46***h* of the right chip **130** through, in sequence, the metal interconnect or trace **4***c*, the metal plug **5***p* over the left chip **130**, the metal interconnect or trace **5***w*, the metal plug **5***p* over the right chip **130**, and the metal interconnect or trace **4***g*.

[0671] In a case, the left chip **130** can be a dynamic-random-access-memory (DRAM) chip, and the right chip **130** can be another dynamic-random-access-memory (DRAM) chip, a central-processing-unit (CPU) chip, a graphics-processing-unit (GPU) chip, a digital-signal-processing (DSP) chip, or a chip including a central-processing-unit (CPU) circuit block, a graphics-processing-unit (GPU) circuit block, a digital-signal-processing (DSP) circuit block, a baseband circuit block, a Bluetooth circuit block, a global-positioning-system (GPS) circuit block, a memory circuit block, a wireless local area network (WLAN) circuit block and a modem circuit block.

[0672] In another case, the left chip **130** can be a central-processing-unit (CPU) chip, and the right chip **130** can be another central-processing-unit (CPU) chip, a graphics-processing-unit (GPU) chip, a digital-signal-processing (DSP) chip, or a chip including a central-processing-unit (CPU) circuit block, a graphics-processing-unit (GPU) circuit block, a digital-signal-processing (DSP) circuit block, a baseband circuit block, a Bluetooth circuit block, a global-positioning-system (GPS) circuit block, a memory circuit block, a wireless local area network (WLAN) circuit block and a modem circuit block.

[0673] Alternatively, regarding to the system-in package or multichip module shown in FIGS. **109**T and **109**U, the metal plugs **5***p* may be further formed on multiple contact points of the metal interconnects or traces **4***f*. And one of the interconnects or traces **4***f* can be connected to one of the metal traces or pads **26** of the chips **120** through, in sequence, one of the metal plugs **5***p* that are formed on the contact points of the metal interconnects or traces **4***f*, one of multiple metal interconnects or traces, such as signal traces, clock traces, power buses or traces, or ground buses or traces, provided by the patterned metal layer **5**, one of the metal plugs **5***m*, and the patterned metal layer **3**, and connected to one of the metal traces or pads **66** of the chips **140** through, in sequence, the one of the metal plugs **5***p* that are formed on the contact points of the metal interconnects or traces **4***f*, the one of the metal interconnects or traces provided by the patterned metal layer **5**, one of the metal plugs **7***m*, the patterned metal layer **7** and one of the metal plugs **7***p*.

[0674] Alternatively, regarding to the system-in package or multichip module shown in FIGS. **109**T and **109**U, the metal interconnects or traces **4***a*, **4***b*, **4***c*, **4***d*, **4***e*, **4***f* and **4***g* provided by the patterned metal layers **4** of the left and right chips **130** can be omitted, and the metal plugs **5***p* can be formed directly on the contact points **46***a*, **46***b*, **46***c*, **46***d*, **46***e*, **46***f*, **46***g* and **46***h*. The contact points **46***a* can be connected to the metal interconnects or traces **5***s* through the metal plugs **5***p* that are formed directly on the contact points **46***a*. The contact points **46***b* can be connected to the metal interconnects or traces **51** through the metal plugs **5***p* that are formed directly on the contact points **46***b*. The contact points **46***e* can be connected to the metal interconnects or traces **5***u* through the metal plugs **5***p* that are formed directly on the contact points **46***e*. The contact points **46***f* can be connected to the metal interconnects or traces **5***v* through the metal plugs **5***p* that are formed directly on the contact points **46***f*. The contact point **46***g* can be connected to the metal interconnect or trace **5***w* through the metal plug **5***p* that is formed directly on the contact point **46***g*, and the contact point **46***h* can be connected to the metal interconnect or trace **5***w* through the metal plug **5***p* that is formed directly on the contact point **46***h*. The contact points **46***c* can be connected to the contact points **46***d* through, in

sequence, the metal plugs **5***p* formed directly on the contact points **46***c*, multiple metal interconnects or traces, such as signal traces, clock traces, power buses or traces, or ground buses or traces, provided by the patterned metal layer **5** over the right chip **130**, and the metal plugs **5***p* formed directly on the contact points **46***d*, and the metal interconnects or traces can be connected to the metal traces or pads **26** of the chips **120** through the metal plugs **5***m* and the patterned metal layer **3** and to the metal traces or pads **66** of the chips **140** through the metal plugs **7***m*, the patterned metal layer **7** and the metal plugs **7***p*.

[0675] The previously described system-in packages or multichip modules shown in FIGS. **52**, **54**, **55**, **66**, **67**, **72**, **73**, **83**, **84**, **104**, **107**K, **107**L, **108**F and **109**T, the previously described module shown in FIG. **74** and the previously described electronic device shown in FIG. **85** can be used, e.g., for a telephone, a cordless phone, a mobile phone, a smart phone, a netbook computer, a notebook computer, a digital camera, a digital video camera, a digital picture frame, a personal digital assistant (PDA), a pocket personal computer, a portable personal computer, an electronic book, a digital book, a desktop computer, a tablet or slate computer, an automobile electronic product, a mobile internet device (MID), a mobile television, a projector, a mobile projector, a pico projector, a smart projector, a three-dimensional 3D video display, a 3D television (3D TV), a 3D video game player, a mobile computer device, a mobile compuphone (also called mobile phoneputer or mobile personal computer phone) which is a device or a system combining and providing functions of computers and phones, or a high performance and/or low power computer or server, for example, used for cloud computing.

[0676] The components, steps, features, benefits and advantages that have been discussed are merely illustrative. None of them, nor the discussions relating to them, are intended to limit the scope of the present disclosure in any way. Numerous other embodiments are also contemplated. These include embodiments that have fewer, additional, and/or different components, steps, features, benefits and advantages. These also include embodiments in which the components and/or steps are arranged and/or ordered differently. In reading the present disclosure, one skilled in the art will appreciate that embodiments of the present disclosure can be implemented in hardware, software, firmware, or any combinations of such, and over one or more communications networks. Suitable software can include computer-readable or machine-readable instructions for performing methods and techniques (and portions thereof) of designing and/or controlling the implementation system in packages (SIPs) or multichip modules MCMs (or portions thereof) in accordance with the present disclosure. Any suitable software language (machine-dependent or machine-independent) or computer-readable storage media may be utilized. Moreover, embodiments of the present disclosure can be included in or carried by various signals, e.g., as transmitted over a wireless RF or IR communications link or downloaded from the Internet.

[0677] Unless otherwise stated, all measurements, values, ratings, positions, magnitudes, sizes, and other specifications that are set forth in this specification, including in the claims, are approximate, not exact. They are intended to have a reasonable range that is consistent with the functions to which they relate and with what is customary in the art to which they pertain.

What is claimed is:

1. A system-in package comprising:

a first polymer layer;

a first chip in the first polymer layer;

a first metal layer over the first chip and over a top surface of the first polymer layer, wherein the first metal layer is connected to the first chip;

a second polymer layer over the first polymer layer, over the first chip and over the first metal layer;

a second chip in the second polymer layer, wherein the second chip comprises a first metal bump in the second polymer layer;

a second metal bump in the second polymer layer and over the first metal layer, wherein the second metal bump is connected to the first metal layer, wherein the second metal bump is higher than the first metal bump, wherein a top surface of the first metal bump and a top surface of the second metal bump are not covered by the second polymer layer; and

a second metal layer on the top surface of the first metal bump, on the top surface of the second metal bump and over a top surface of the second polymer layer, wherein the second metal layer connects the first metal bump to the second metal bump, wherein the first metal bump is connected to the first chip through, in sequence, the second metal layer, the second metal bump and the first metal layer.

2. The system-in package of claim **1**, wherein the first chip comprises a central-processing-unit (CPU) chip, a baseband chip, a graphics-processing-unit (GPU) chip, a digital-signal-processing (DSP) chip, a wireless local area network (WLAN) chip, a memory chip, a flash memory chip, a dynamic-random-access-memory (DRAM) chip, a static-random-access-memory (SRAM) chip, a logic chip, an analog chip, a power device, a regulator, a power management device, a global-positioning-system (GPS) chip, a Bluetooth chip, or a system-on chip (SOC) comprising a central-processing-unit (CPU) circuit block, a graphics-processing-unit (GPU) circuit block, a baseband circuit block, a digital-signal-processing (DSP) circuit block, a memory circuit block, a Bluetooth circuit block, a global-positioning-system (GPS) circuit block, a wireless local area network (WLAN) circuit block and a modem circuit block.

3. The system-in package of claim **1** further comprising a substrate under the first polymer layer, wherein the first chip and the second chip are over the substrate, wherein the substrate comprises a mother board, a printed circuit board, a ball-grid-array (BGA) substrate, a metal substrate, a glass substrate, or a ceramic substrate.

4. The system-in package of claim **1** further comprising a third metal layer over the top surface of the first polymer layer, wherein the third metal layer and the first metal layer are at a same horizontal level, wherein the second chip is further vertically over the third metal layer, wherein the third metal layer provides a power interconnect, a ground interconnect or a signal interconnect.

5. The system-in package of claim **1** further comprising a thermal spreading plane over the first chip, over the second chip, over the second polymer layer, over the second metal bump and over the second metal layer, wherein the first chip and the second chip are connected to the thermal spreading plane.

6. The system-in package of claim **1**, wherein the first metal bump comprises a first copper layer having a thickness

between 5 and 50 micrometers, wherein the second metal bump comprises a second copper layer having a thickness between 15 and 520 micrometers.

7. The system-in package of claim **1**, wherein the first chip comprises a third metal bump in the first polymer layer, wherein a top surface of the third metal bump is not covered by the first polymer layer, wherein the first metal layer is further on the top surface of the third metal bump, wherein the first metal bump is connected to the third metal bump through, in sequence, the second metal layer, the second metal bump and the first metal layer.

8. The system-in package of claim **1**, wherein the first metal layer provides a power interconnect, a ground interconnect or a signal interconnect.

9. The system-in package of claim **1** further comprising a third metal layer over the top surface of the first polymer layer and over the first chip, a third chip in the second polymer layer, a third metal bump in the second polymer layer and over the third metal layer, and a fourth metal layer on a top surface of a fourth metal bump of the third chip, on a top surface of the third metal bump and over the top surface of the second polymer layer, wherein the fourth metal bump is in the second polymer layer, wherein the top surface of the third metal bump and the top surface of the fourth metal bump are not covered by the second polymer layer, wherein the fourth metal layer connects the third metal bump to the fourth metal bump, wherein the third metal bump is higher than the fourth metal bump, wherein the fourth metal bump is connected to the first chip through, in sequence, the fourth metal layer, the third metal bump and the third metal layer.

10. The system-in package of claim **1**, wherein the total number of bit lines in parallel data communication between the first and second chips is more than 128, and one of the bit lines is provided by the first and second metal layers and the first and second metal bumps.

11. A system-in package comprising:

a substrate;

a first polymer layer over the substrate;

a first chip in the first polymer layer and over the substrate, wherein the first chip comprises a first metal bump and a second metal bump;

a third metal bump in the first polymer layer and over the substrate, wherein the third metal bump is connected to a pad of the substrate, wherein the third metal bump is higher than the first metal bump and higher than the second metal bump, wherein a top surface of the first metal bump, a top surface of the second metal bump and a top surface of the third metal bump are not covered by the first polymer layer;

a first metal layer on the top surface of the first metal bump, on the top surface of the third metal bump and over a top surface of the first polymer layer, wherein the first metal layer connects the first metal bump to the third metal bump, wherein the first metal bump is connected to the pad of the substrate through, in sequence, the first metal layer and the third metal bump;

a second metal layer on the top surface of the second metal bump and over the top surface of the first polymer layer, wherein the second metal layer is connected to the second metal bump;

a second polymer layer over the first polymer layer, over the first metal layer, over the second metal layer and over the first chip;

a second chip in the second polymer layer, wherein the second chip comprises a fourth metal bump;

a fifth metal bump in the second polymer layer, wherein the fifth metal bump is connected to the second metal layer, wherein the fifth metal bump is higher than the fourth metal bump, wherein a top surface of the fourth metal bump and a top surface of the fifth metal bump are not covered by the second polymer layer; and

a third metal layer on the top surface of the fourth metal bump, on the top surface of the fifth metal bump and over a top surface of the second polymer layer, wherein the third metal layer connects the fourth metal bump to the fifth metal bump, wherein the fourth metal bump is connected to the second metal bump through, in sequence, the third metal layer, the fifth metal bump and the second metal layer.

12. The system-in package of claim **11**, wherein the substrate comprises a mother board, a printed circuit board, a ball-grid-array (BGA) substrate, a metal substrate, a glass substrate or a ceramic substrate.

13. The system-in package of claim **11**, wherein the first chip comprises a central-processing-unit (CPU) chip, a baseband chip, a graphics-processing-unit (GPU) chip, a digital-signal-processing (DSP) chip, a wireless local area network (WLAN) chip, a memory chip, a flash memory chip, a dynamic-random-access-memory (DRAM) chip, a static-random-access-memory (SRAM) chip, a logic chip, an analog chip, a power device, a regulator, a power management device, a global-positioning-system (GPS) chip, a Bluetooth chip, or a system-on chip (SOC) comprising a central-processing-unit (CPU) circuit block, a graphics-processing-unit (GPU) circuit block, a baseband circuit block, a digital-signal-processing (DSP) circuit block, a memory circuit block, a Bluetooth circuit block, a global-positioning-system (GPS) circuit block, a wireless local area network (WLAN) circuit block and a modem circuit block.

14. The system-in package of claim **11** further comprising a fourth metal layer over the top surface of the first polymer layer, wherein the second chip is further vertically over the fourth metal layer, wherein the fourth metal layer provides a power interconnect, a ground interconnect or a signal interconnect.

15. The system-in package of claim **11** further comprising a thermal spreading plane over the first chip, over the second chip, over the second polymer layer, over the fifth metal bump and over the third metal layer, wherein the first chip and the second chip are connected to the thermal spreading plane.

16. The system-in package of claim **11**, wherein the fourth metal bump comprises a first copper layer having a thickness between 5 and 50 micrometers, wherein the fifth metal bump comprises a second copper layer having a thickness between 15 and 520 micrometers.

17. The system-in package of claim **11**, wherein the second metal layer comprises a first copper layer having a thickness between 2 and 30 micrometers, wherein the third metal layer comprises a second copper layer having a thickness between 2 and 30 micrometers.

18. The system-in package of claim **11**, wherein the third metal layer provides a power interconnect, a ground interconnect or a signal interconnect.

19. The system-in package of claim **11** further comprising a passive component in or over the second polymer layer.

20. The system-in package of claim **11**, wherein the second chip is further vertically over the second metal layer.

* * * * *