US009123763B2

(12) **United States Patent**
Yu et al.

(10) **Patent No.: US 9,123,763 B2**
(45) **Date of Patent: Sep. 1, 2015**

(54) **PACKAGE-ON-PACKAGE (POP) STRUCTURE HAVING AT LEAST ONE PACKAGE COMPRISING ONE DIE BEING DISPOSED IN A CORE MATERIAL BETWEEN FIRST AND SECOND SURFACES OF THE CORE MATERIAL**

(75) Inventors: **Chen-Hua Yu**, Hsin-Chu (TW); **Chung-Shi Liu**, Hsin-Chu (TW); **Mirng-Ji Lii**, Sinpu Township (TW); **Ming-Da Cheng**, Jhubei (TW); **Chih-Wei Lin**, Xinfeng Township (TW)

(73) Assignee: **Taiwan Semiconductor Manufacturing Company, Ltd.**, Hsin-Chu (TW)

(*) Notice: Subject to any disclaimer, the term of this patent is extended or adjusted under 35 U.S.C. 154(b) by 87 days.

(21) Appl. No.: **13/271,952**

(22) Filed: **Oct. 12, 2011**

(65) **Prior Publication Data**

US 2013/0093097 A1 Apr. 18, 2013

(51) **Int. Cl.**

H01L 23/48	(2006.01)
H01L 21/683	(2006.01)
H01L 23/538	(2006.01)
H01L 21/56	(2006.01)
H01L 25/10	(2006.01)
H01L 21/36	(2006.01)
H01L 23/31	(2006.01)
H01L 21/48	(2006.01)
H01L 23/00	(2006.01)
H05K 1/18	(2006.01)
H01L 23/498	(2006.01)

(52) **U.S. Cl.**

CPC ***H01L 21/6835*** (2013.01); ***H01L 21/568*** (2013.01); ***H01L 23/5383*** (2013.01); ***H01L 25/105*** (2013.01); *H01L 21/4846* (2013.01); *H01L 23/3128* (2013.01); *H01L 23/49816* (2013.01); *H01L 23/49822* (2013.01); *H01L 23/49827* (2013.01); *H01L 24/16* (2013.01); *H01L 24/32* (2013.01); *H01L 2221/68345* (2013.01); *H01L 2224/131* (2013.01); *H01L 2224/13082* (2013.01); *H01L 2224/16225* (2013.01); *H01L 2224/16237* (2013.01); *H01L 2224/2919* (2013.01); *H01L 2224/32145* (2013.01); *H01L 2224/32225* (2013.01); *H01L 2224/45124* (2013.01); *H01L 2224/45144* (2013.01); *H01L 2224/73204* (2013.01); *H01L 2224/73253* (2013.01); *H01L 2224/81005* (2013.01); *H01L 2224/81191* (2013.01); *H01L 2224/81815* (2013.01); *H01L 2224/83104* (2013.01); *H01L 2225/1023* (2013.01); *H01L 2225/1058* (2013.01);

(Continued)

(58) **Field of Classification Search**

CPC . H01L 23/5383; H01L 23/5389; H01L 24/18; H01L 2224/24141; H01L 2224/24145; H01L 2224/32141; H01L 2224/32145

USPC 257/723, 777, E23.011, 0.039, 0.04, 257/0.174, 0.178

See application file for complete search history.

(56) **References Cited**

U.S. PATENT DOCUMENTS

5,241,456 A * 8/1993 Marcinkiewicz et al. 361/792
6,960,827 B2 * 11/2005 Nishimura et al. 257/723

(Continued)

Primary Examiner — Anh Mai

(74) *Attorney, Agent, or Firm* — Slater & Matsil, L.L.P.

(57) **ABSTRACT**

A package-on-package (PoP) structure comprises a first package and a second package. The first package comprises a first die, a second die, and a core material. The core material has a first surface and a second surface. A first redistribution layer (RDL) is on the first surface, and a second RDL is on the second surface. The first die is disposed in the core material between the first surface and the second surface. The second die is coupled to one of the first RDL and the second RDL. The second package comprises a third die and an interposer. The interposer has a first side and a second side. The third die is coupled to the second side of the interposer. The first package is coupled to the second package by first electrical connectors coupled to the second side of the interposer and the first RDL.

13 Claims, 32 Drawing Sheets

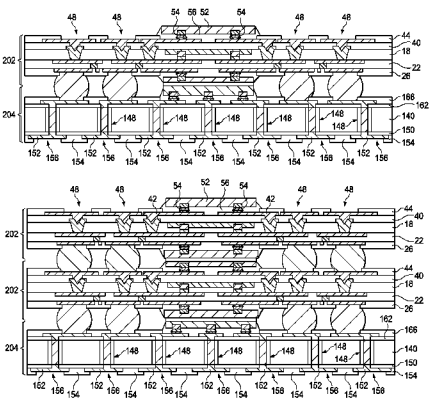

(52) **U.S. Cl.**
CPC *H01L 2924/00014* (2013.01); *H01L 2924/15311* (2013.01); *H01L 2924/15331* (2013.01); *H05K 1/185* (2013.01)

(56) **References Cited**

U.S. PATENT DOCUMENTS

7,226,808	B2 *	6/2007	Aoyagi	438/108
7,230,329	B2 *	6/2007	Sawamoto et al.	257/686
7,321,164	B2 *	1/2008	Hsu	257/686
7,498,666	B2 *	3/2009	Hussa	257/686
7,573,136	B2 *	8/2009	Jiang et al.	257/777
7,781,877	B2 *	8/2010	Jiang et al.	257/686
8,174,109	B2	5/2012	Uchiyama	
8,519,544	B2	8/2013	Kim et al.	
8,975,741	B2 *	3/2015	Lin et al.	257/700
2006/0170098	A1 *	8/2006	Hsu	257/723
2008/0136004	A1 *	6/2008	Yang et al.	257/686
2009/0039491	A1 *	2/2009	Kim et al.	257/686
2010/0252937	A1 *	10/2010	Uchiyama	257/777
2012/0199972	A1	8/2012	Pagaila et al.	
2013/0093078	A1 *	4/2013	Lin et al.	257/737

* cited by examiner

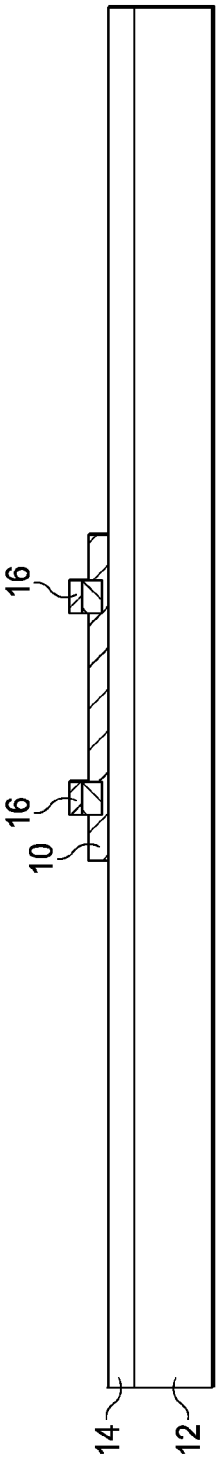

FIG. 1

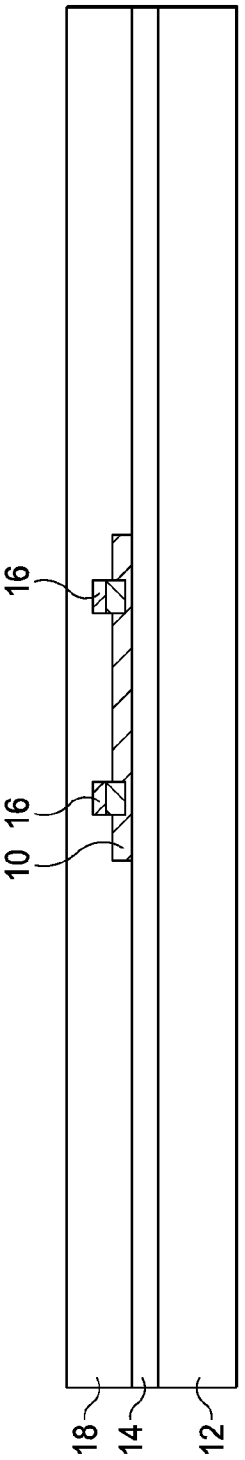

FIG. 2

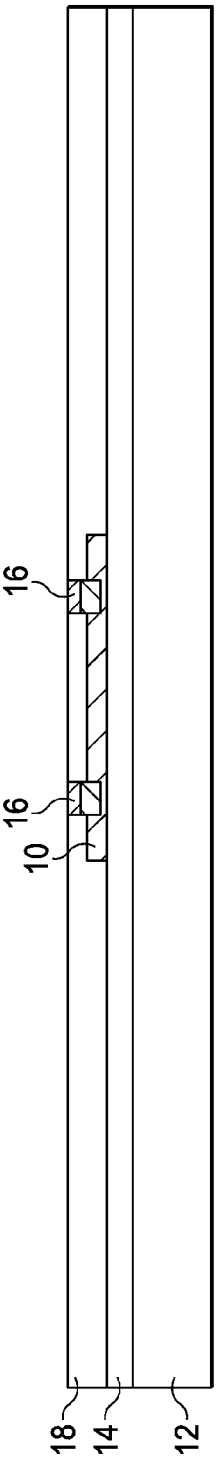

FIG. 3

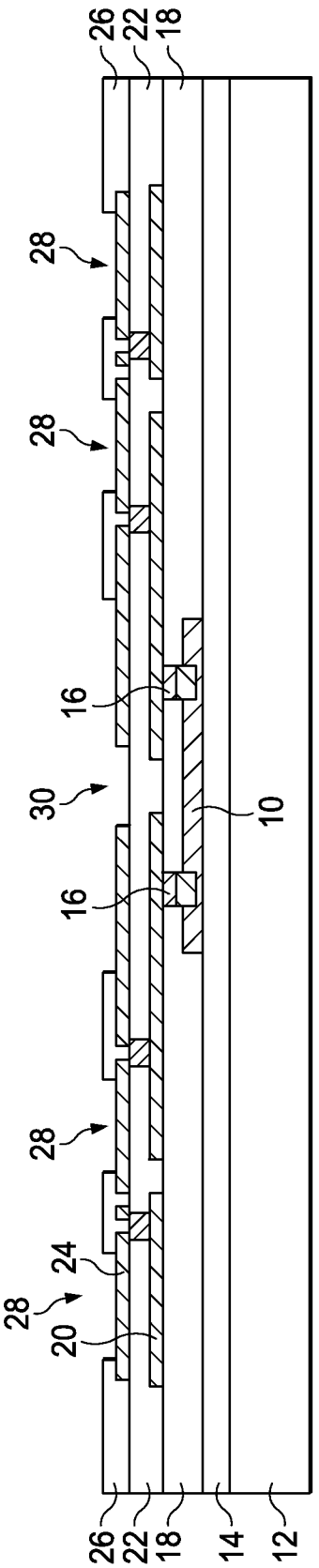
26
22
18
28
28
16
30
10
16
28
24
28
20
26
22
18
14
12

FIG. 4

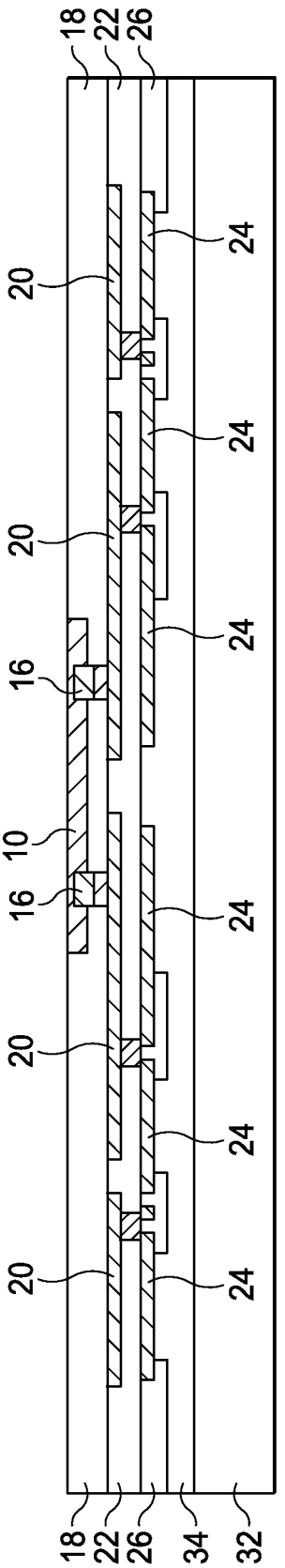
18
22
26
24
20
24
20
24
16
10
16
24
20
24
20
24
18
22
26
34
32

FIG. 5

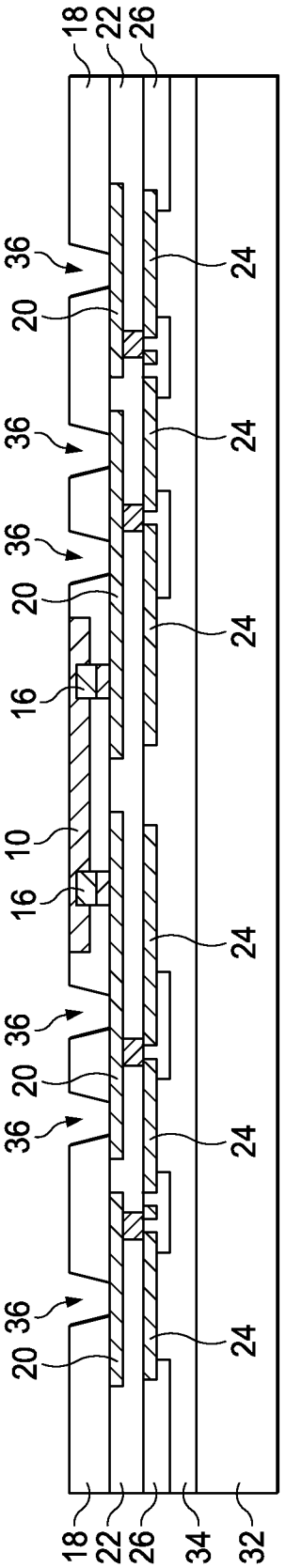

FIG. 6

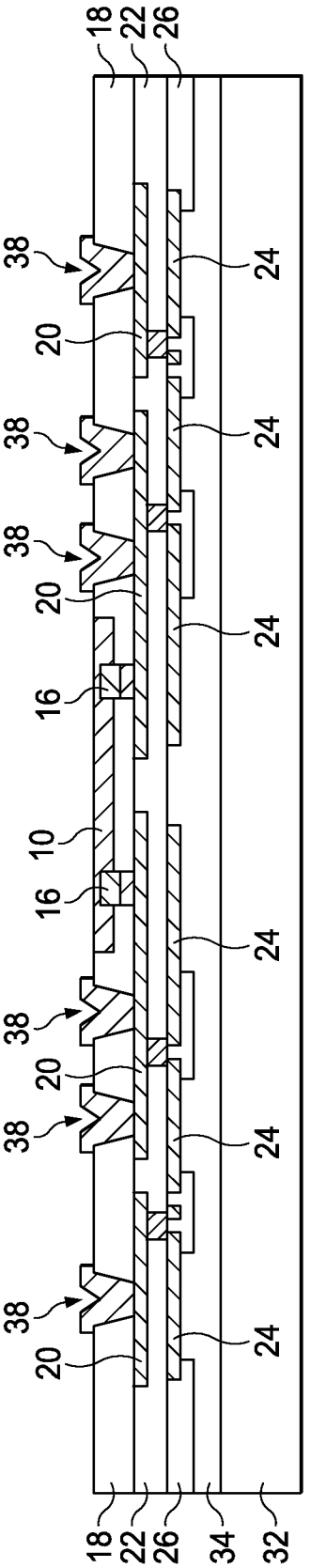

FIG. 7

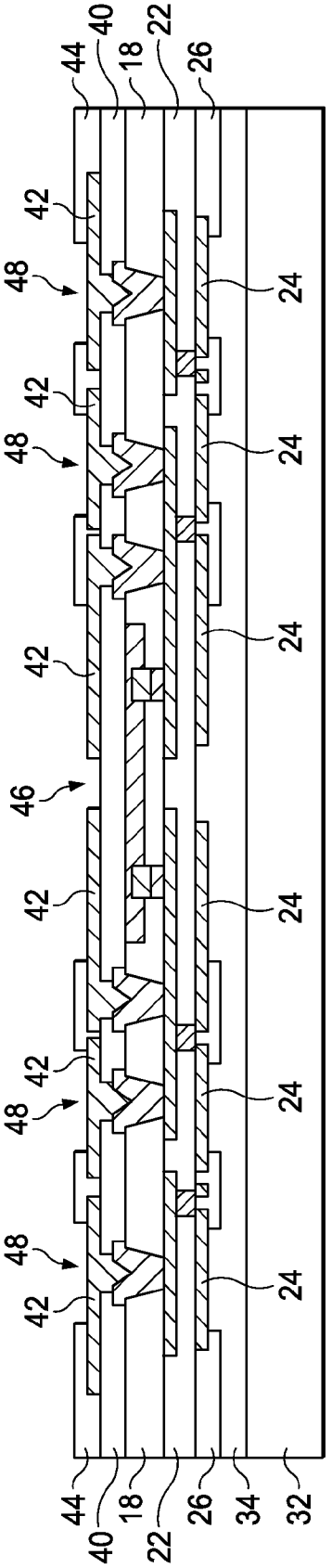

FIG. 8

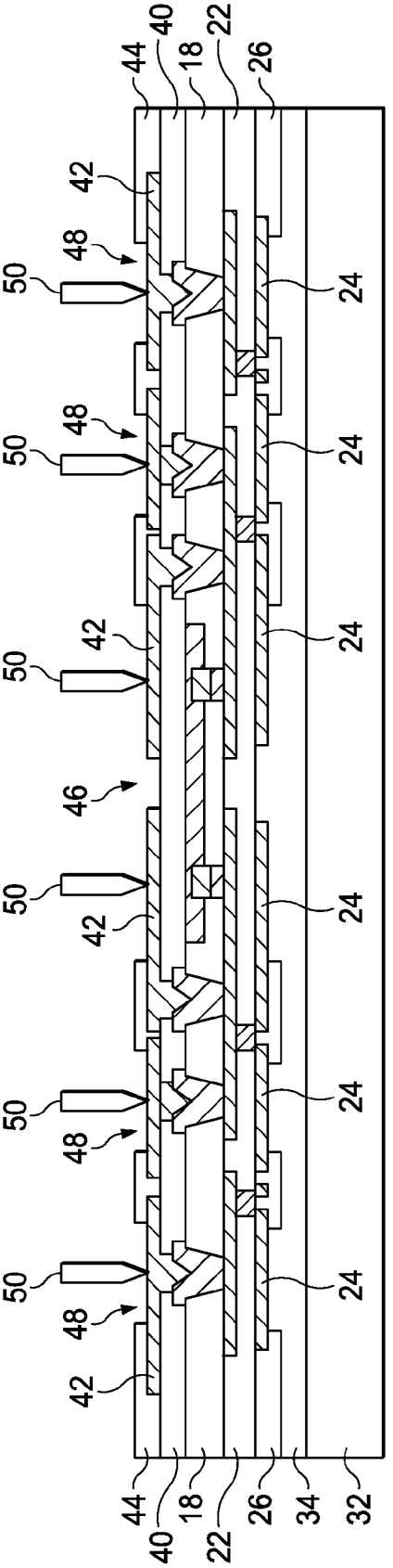

FIG. 9

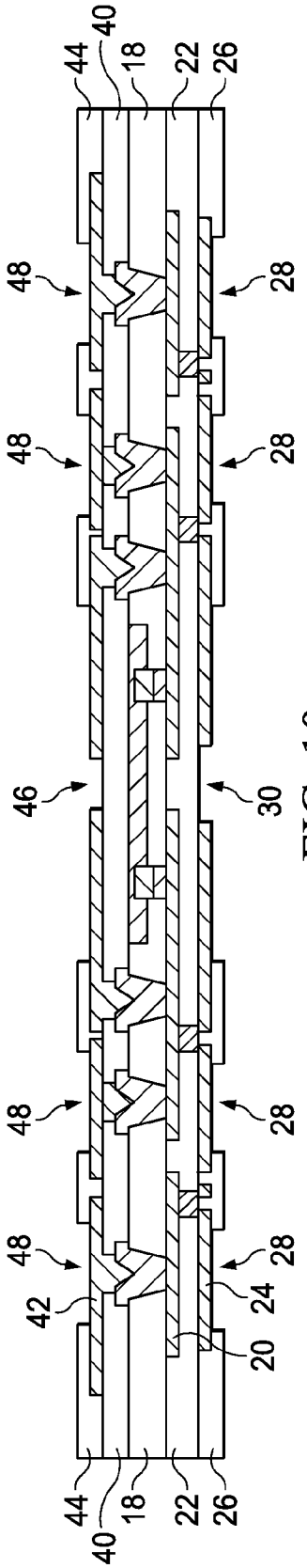
44
40
18
22
26
48
28
48
28
46
30
48
28
48
28
42
24
20
44
40
18
22
26

FIG. 10

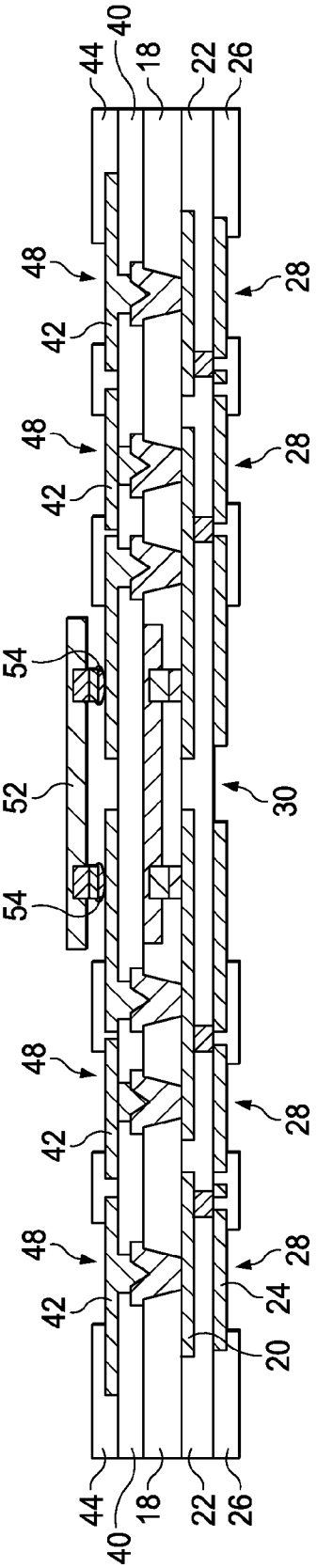
44
40
18
22
26
48
28
42
48
28
42
54
52
30
54
48
28
42
48
28
42
24
20
44
40
18
22
26

FIG. 11

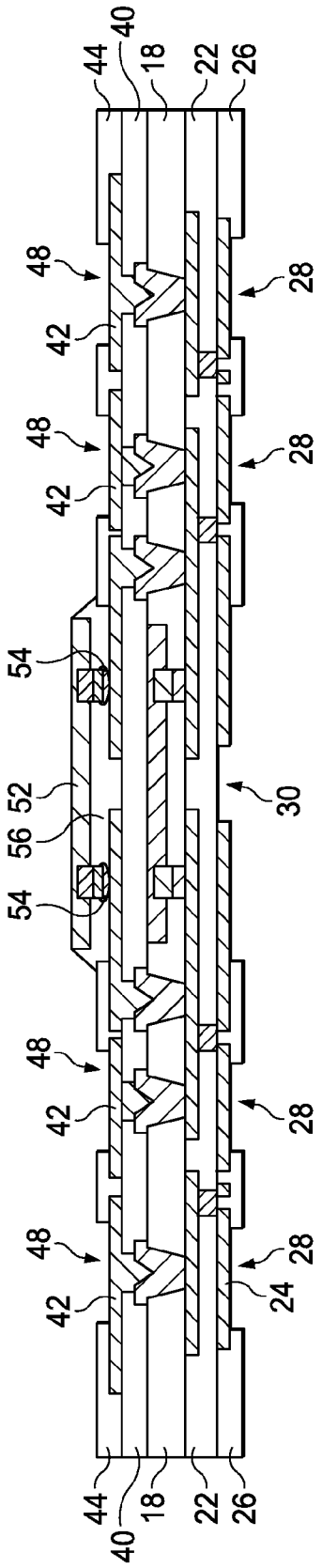
44
40
18
22
26
48
42
28
54
52
56
30
24

FIG. 12

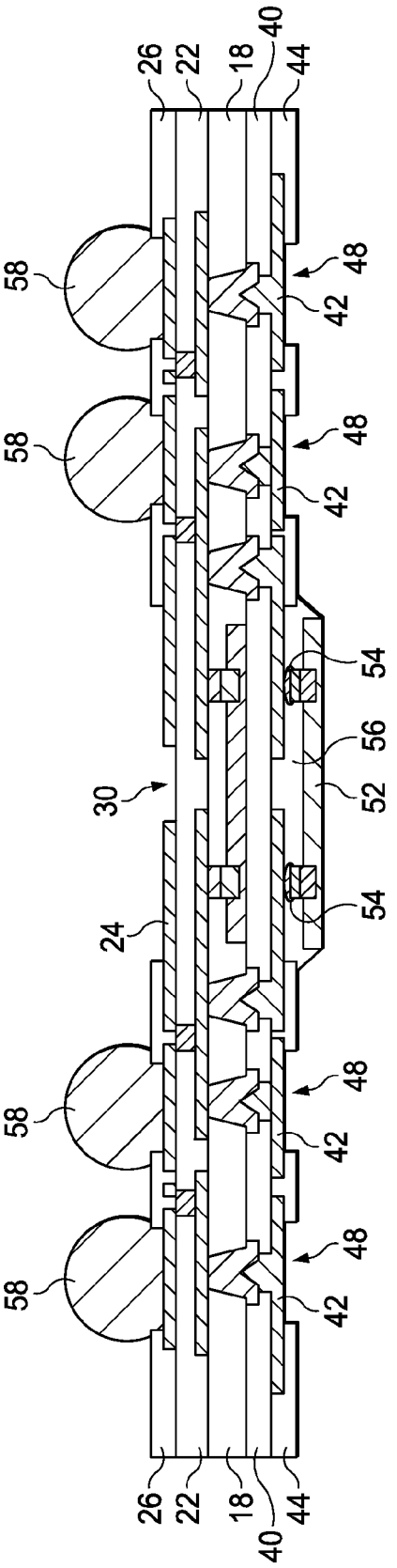
26
22
18
40
44
58
48
42
54
56
52
30
24

FIG. 13

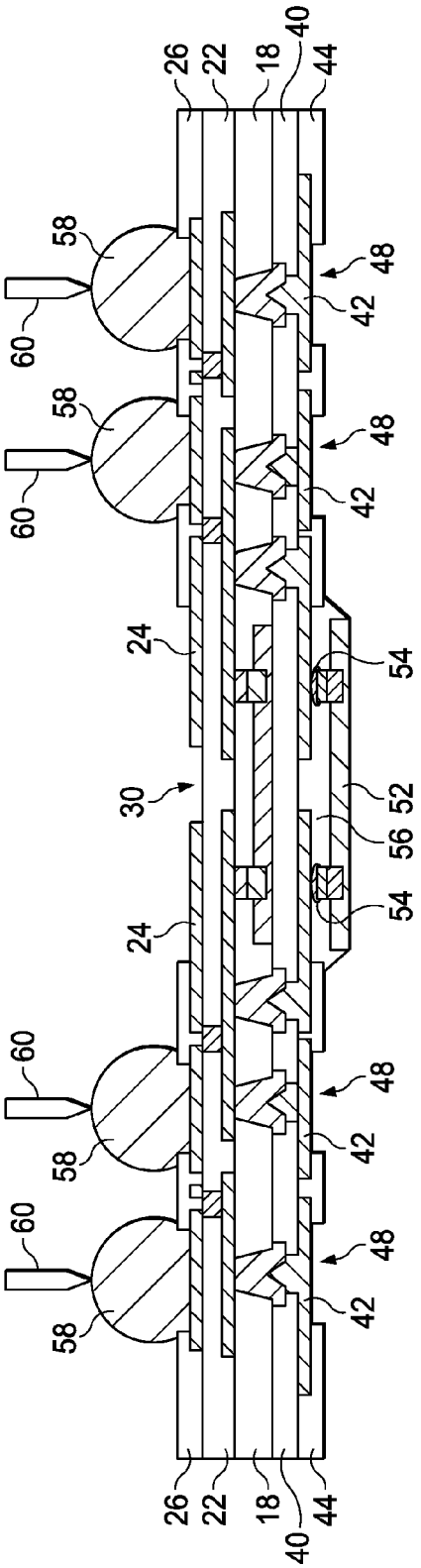
26
22
18
40
44
58
60
48
42
24
30
54
52
56

FIG. 14

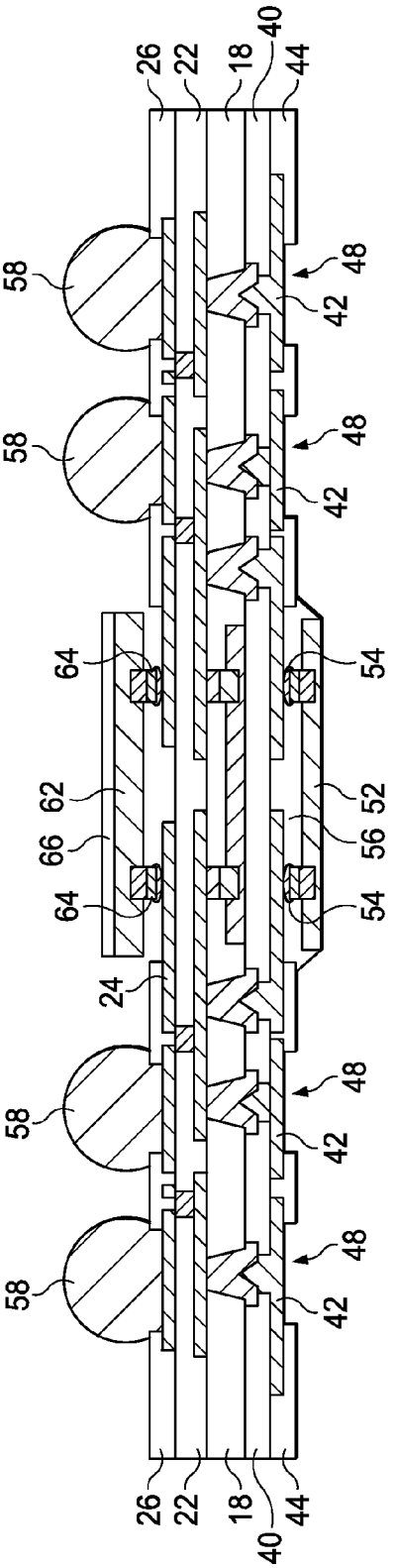
26
22
18
40
44
58
48
42
64
62
66
24
54
52
56

FIG. 15

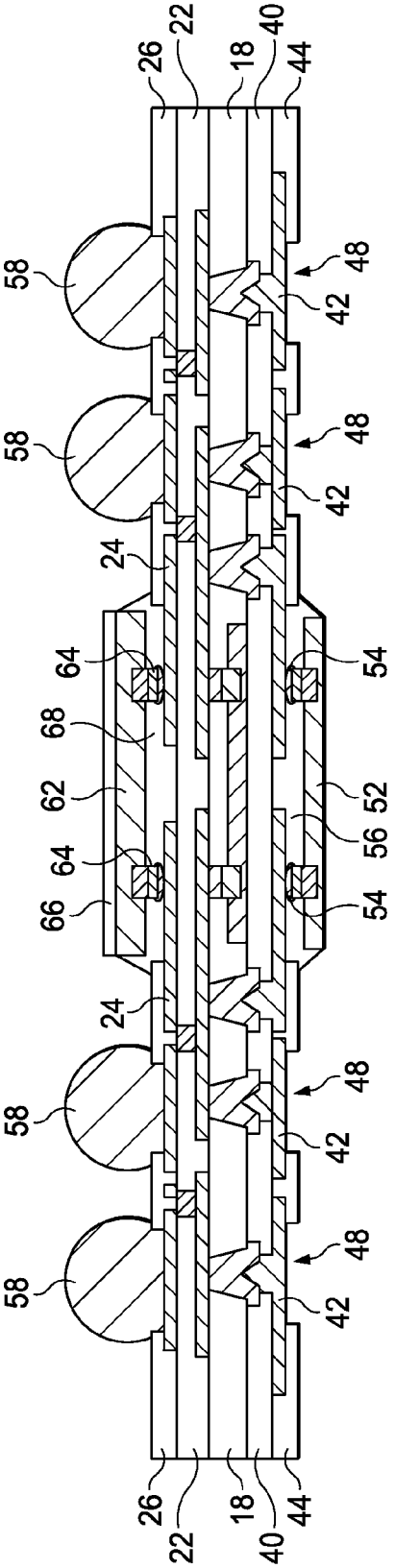
26
22
18
40
44
58
48
42
24
64
68
62
66
54
52
56

FIG. 16

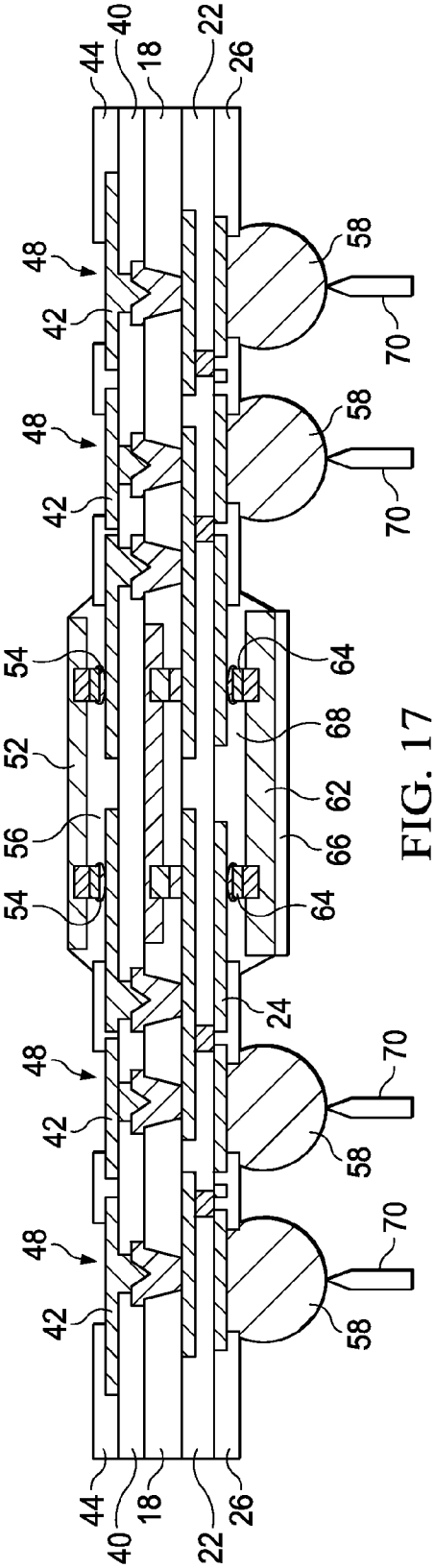
44
40
18
22
26
48
42
58
70
54
52
56
64
68
62
66
24

FIG. 17

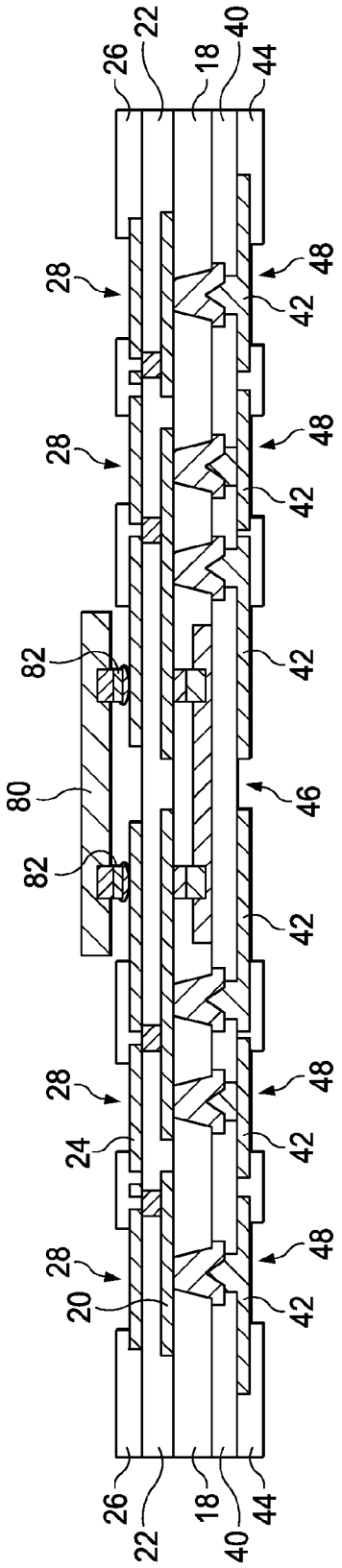
26
22
18
40
44
28
48
42
82
80
46
24
20

FIG. 18

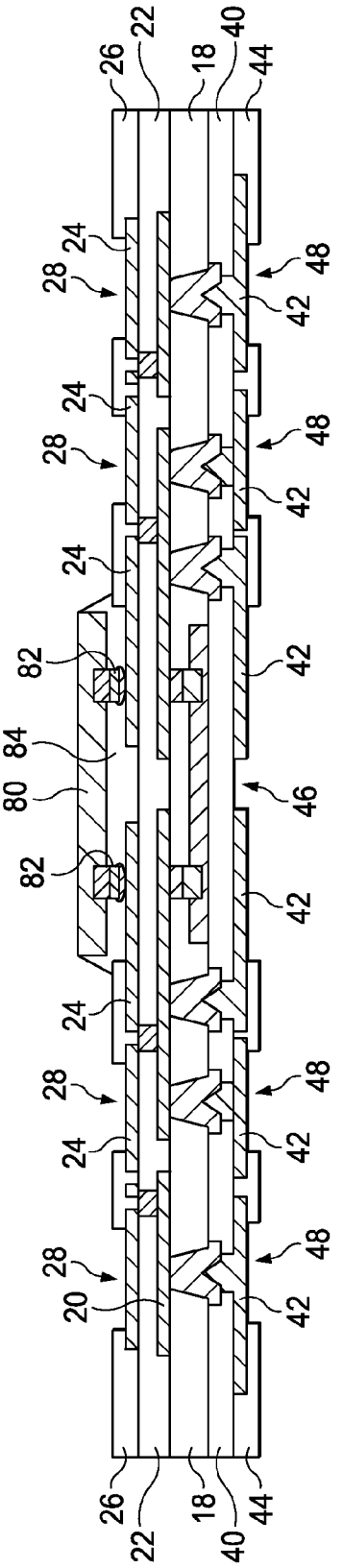
26
22
18
40
44
24
28
48
42
82
84
80
46
20

FIG. 19

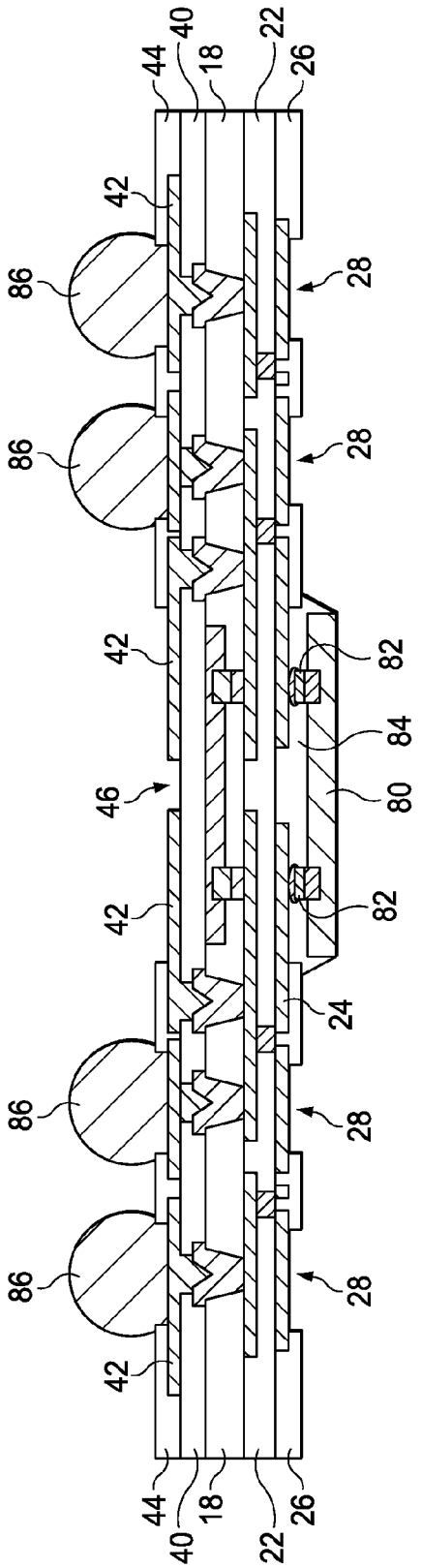
44
40
18
22
26
42
86
28
46
82
84
80
24

FIG. 20

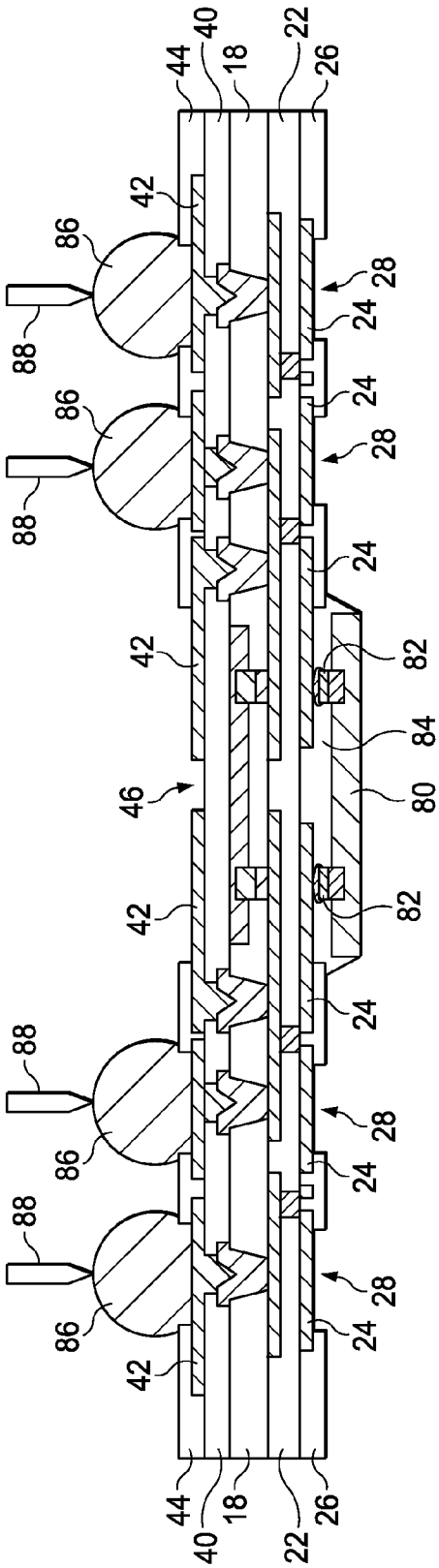
44
40
18
22
26
42
86
88
28
24
46
82
84
80

FIG. 21

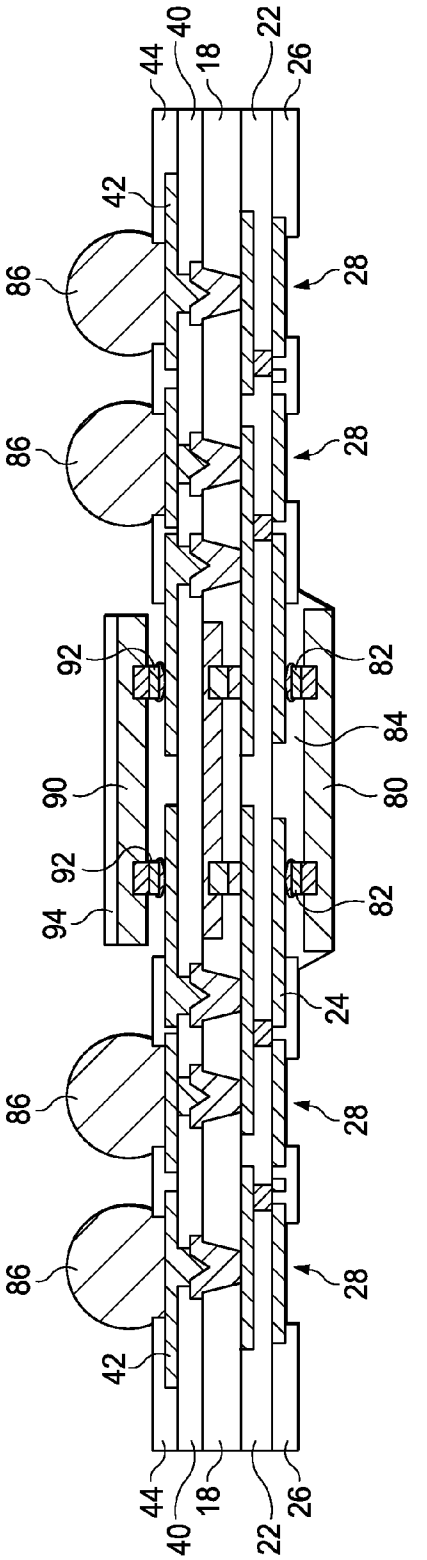
44
40
18
22
26
42
86
28
92
82
84
90
80
94
24

FIG. 22

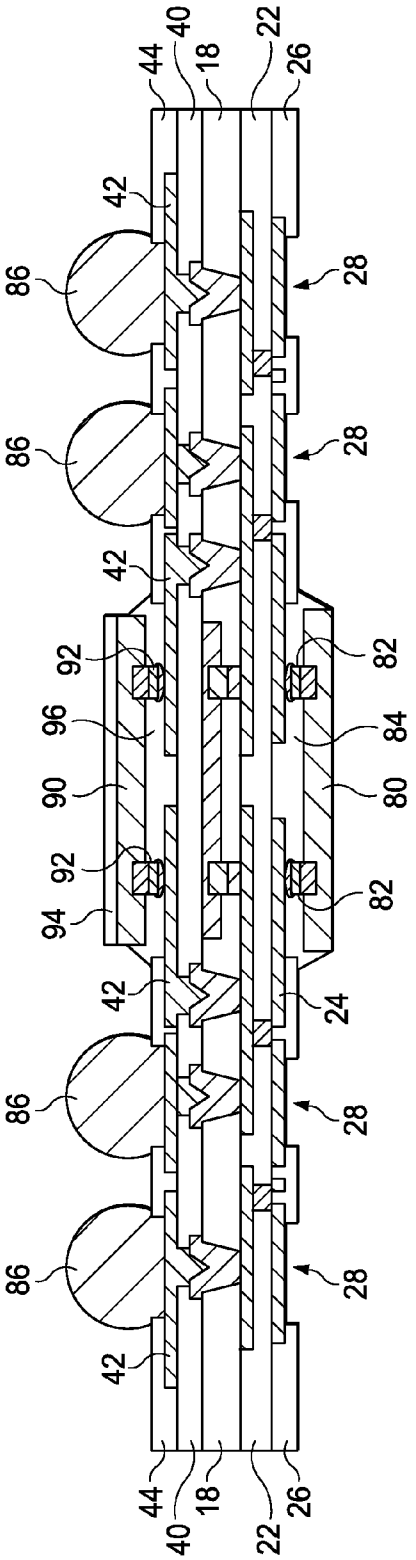
44
40
18
22
26
42
86
28
92
96
82
84
90
80
94
24

FIG. 23

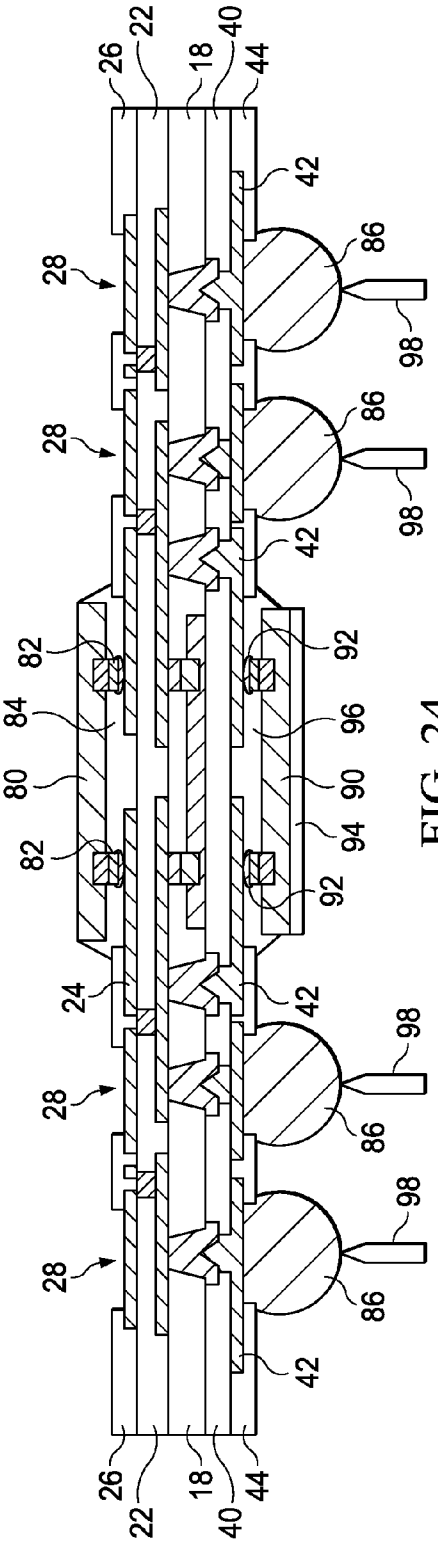
26
22
18
40
44
42
28
86
98
82
84
80
92
96
90
94
24

FIG. 24

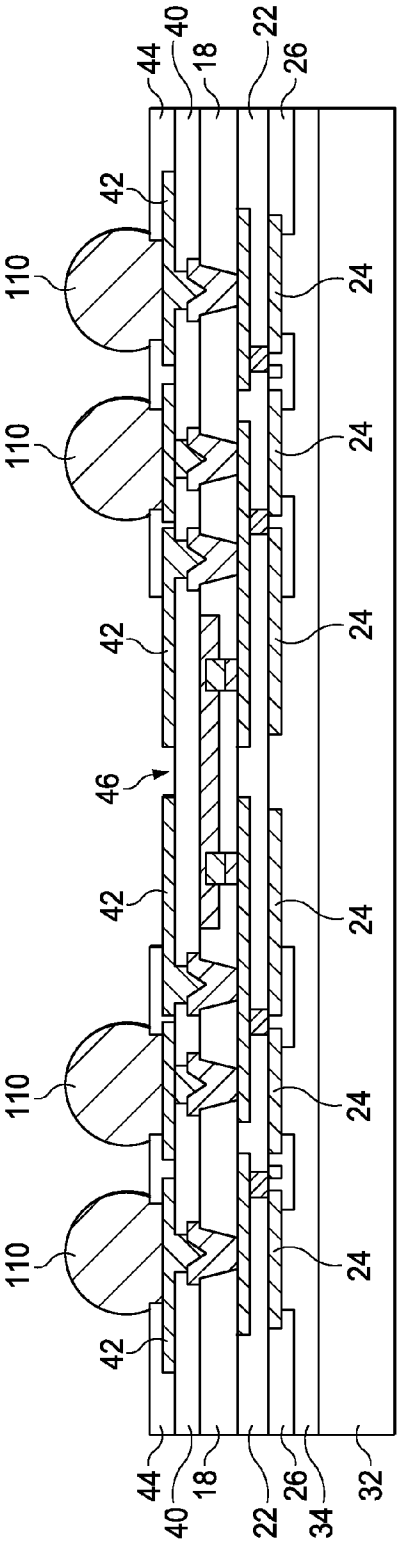
44
40
18
22
26
42
110
24
46
32
34

FIG. 25

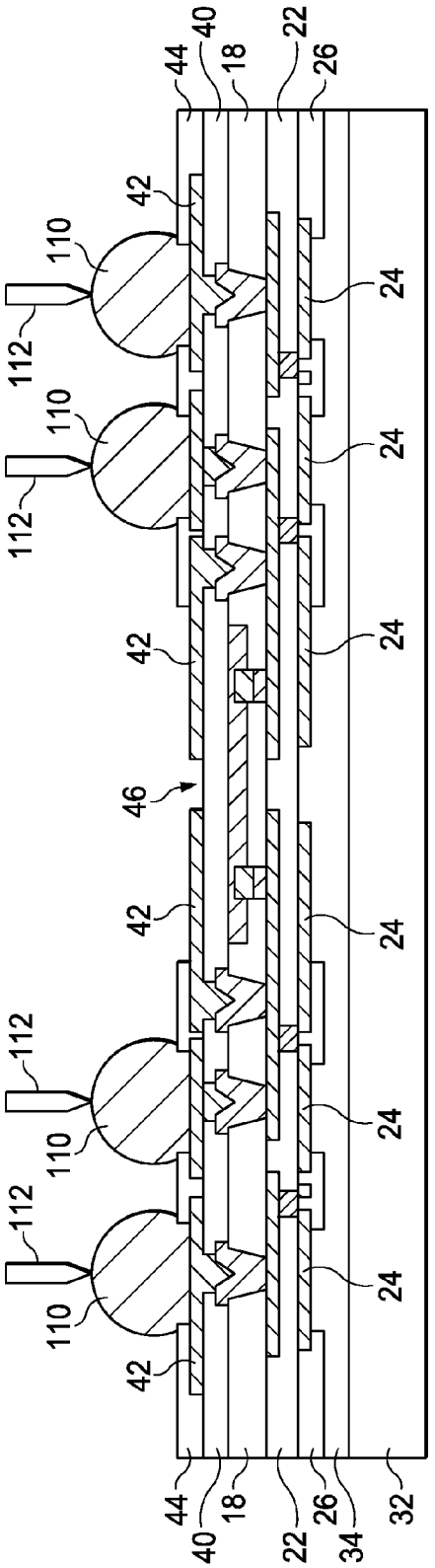
44
40
18
22
26
42
110
112
24
46
34
32

FIG. 26

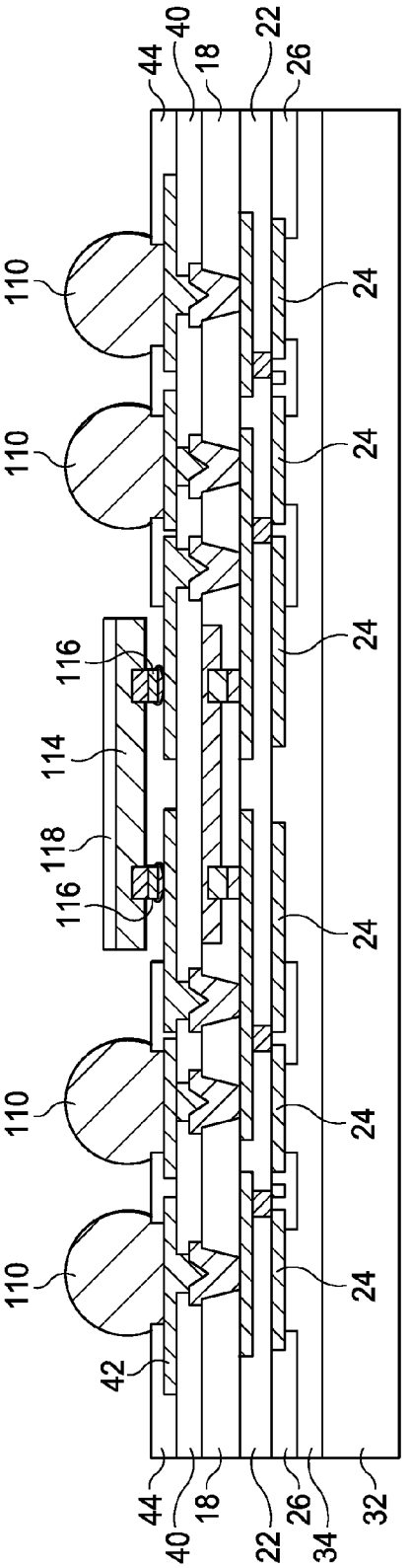
44
40
18
22
26
110
24
116
114
118
42
34
32

FIG. 27

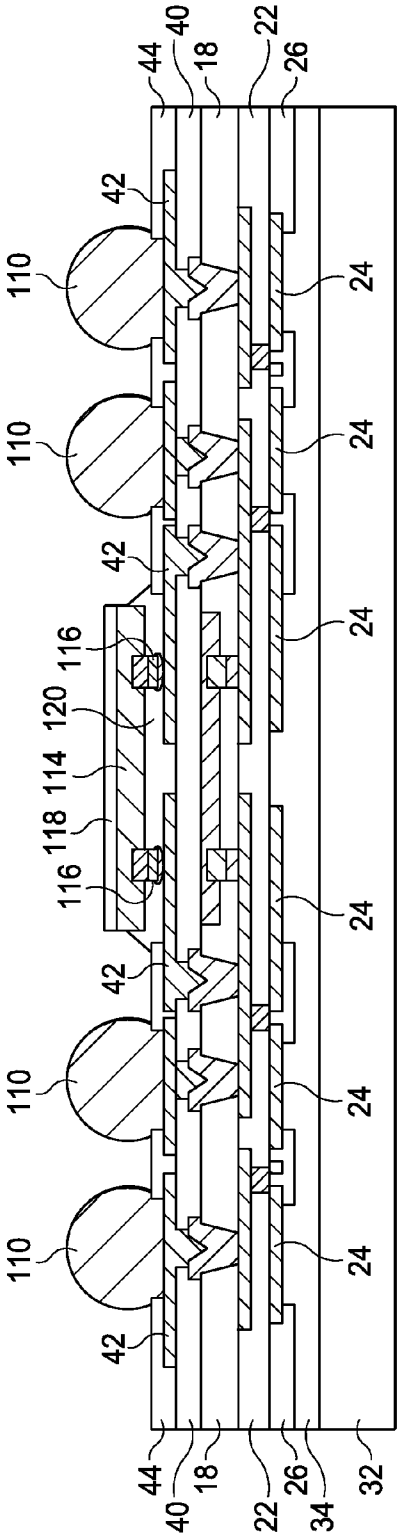
44
40
18
22
26
42
110
24
116
120
114
118
34
32

FIG. 28

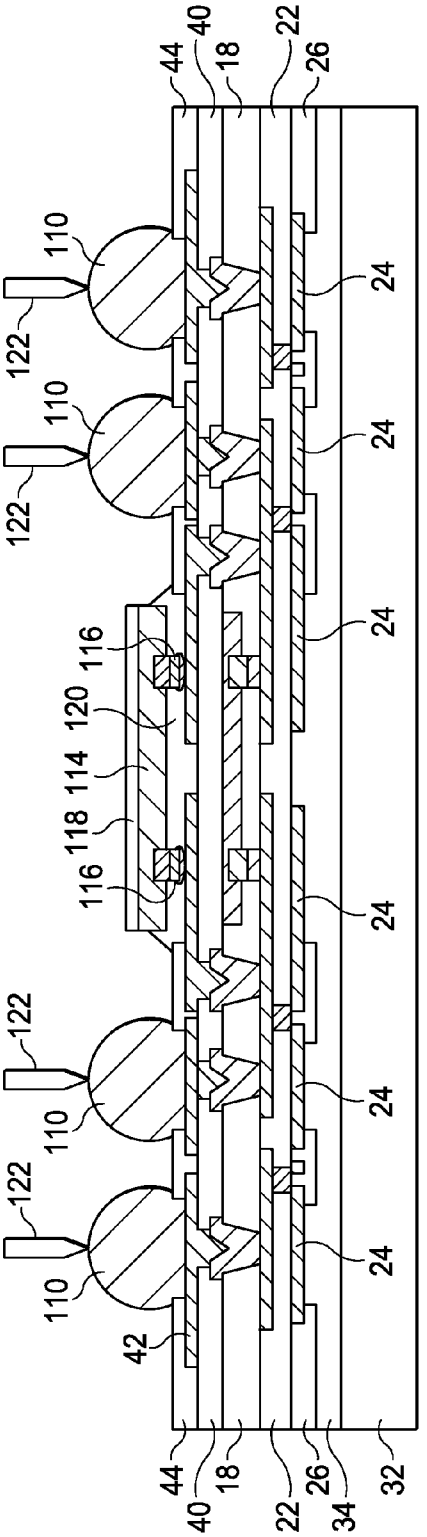
44
40
18
22
26
110
122
24
116
120
114
118
42
34
32

FIG. 29

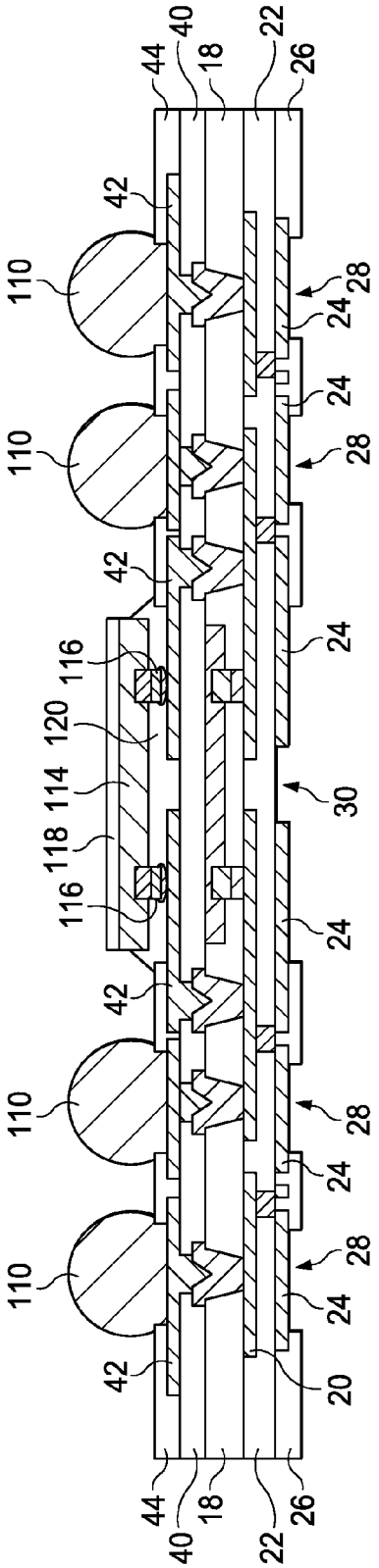
44
40
18
22
26
42
110
28
24
116
120
114
118
30
20

FIG. 30

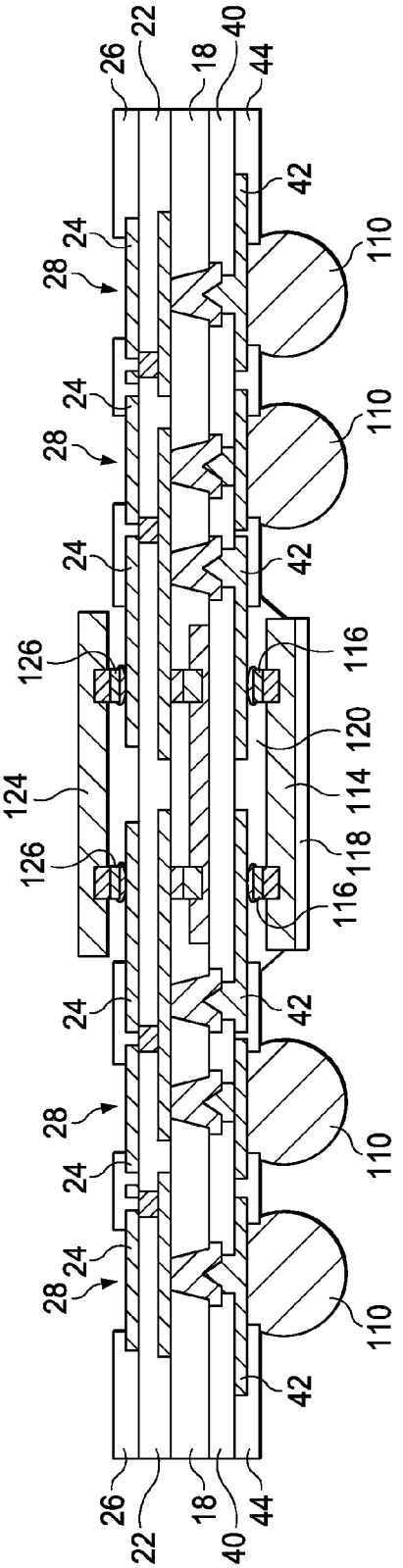
26
22
18
40
44
42
110
28
24
126
116
120
124
114
118

FIG. 31

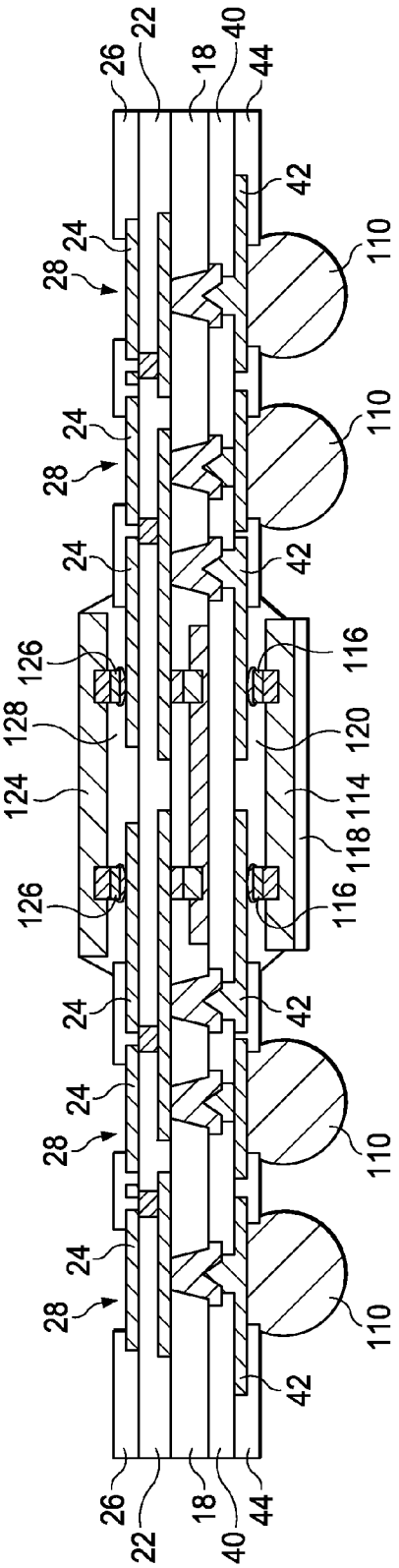
26
22
18
40
44
42
28
24
110
126
128
124
116
120
114
118

FIG. 32

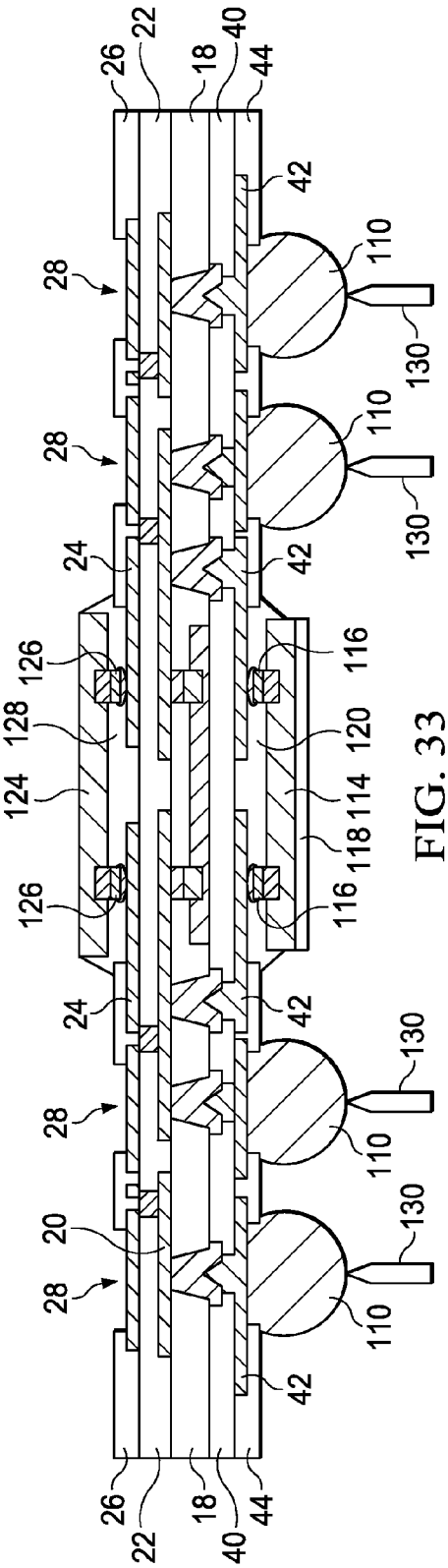
26
22
18
40
44
42
28
24
110
130
126
128
124
116
120
114
118
20

FIG. 33

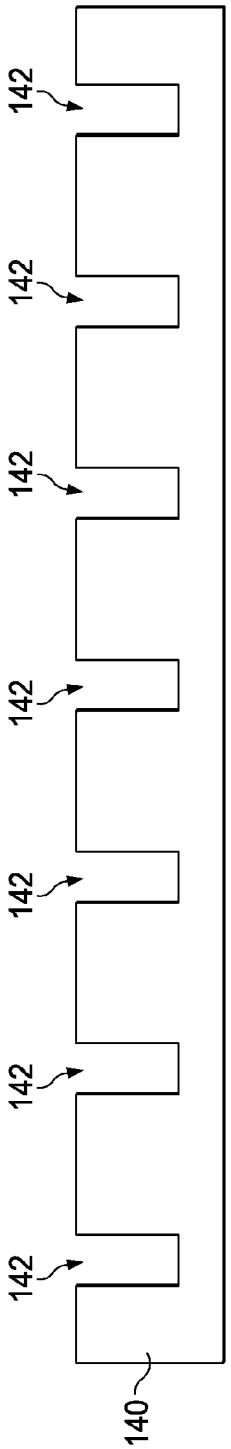

FIG. 34

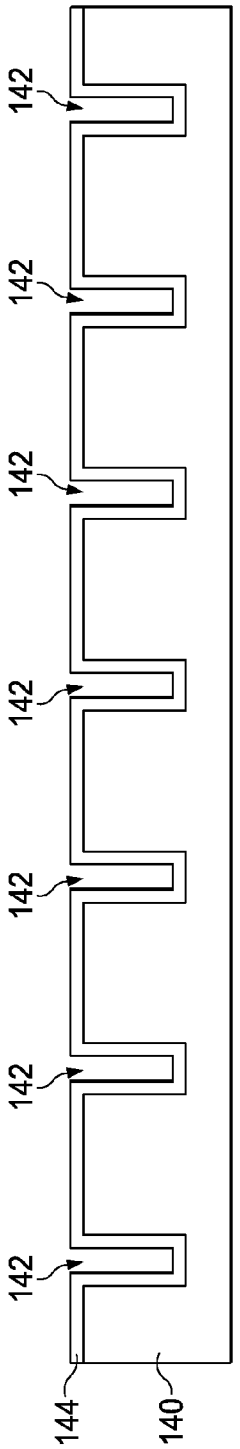

FIG. 35

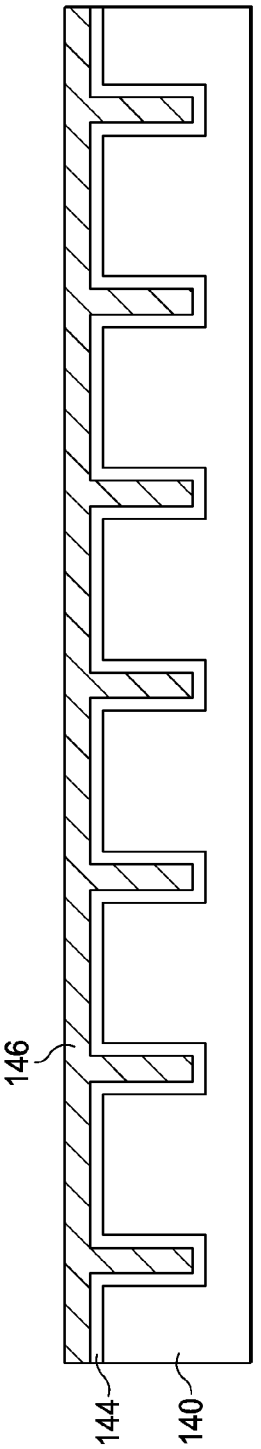

FIG. 36

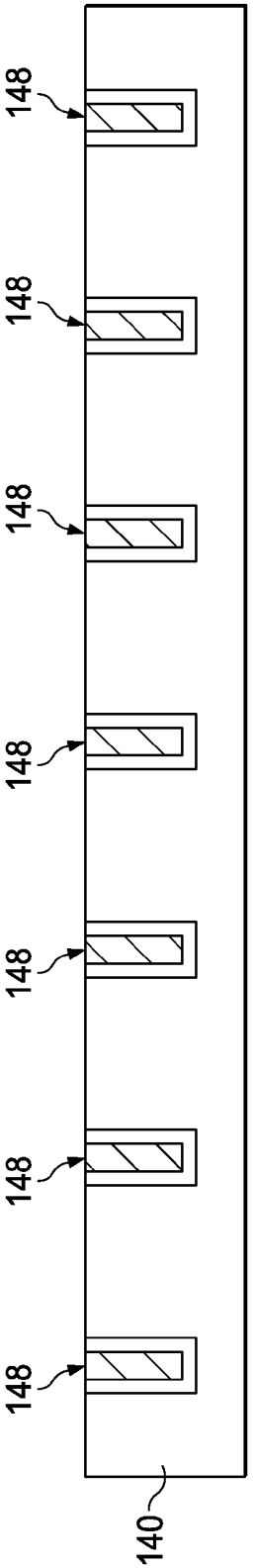
148
148
148
148
148
148
140

FIG. 37

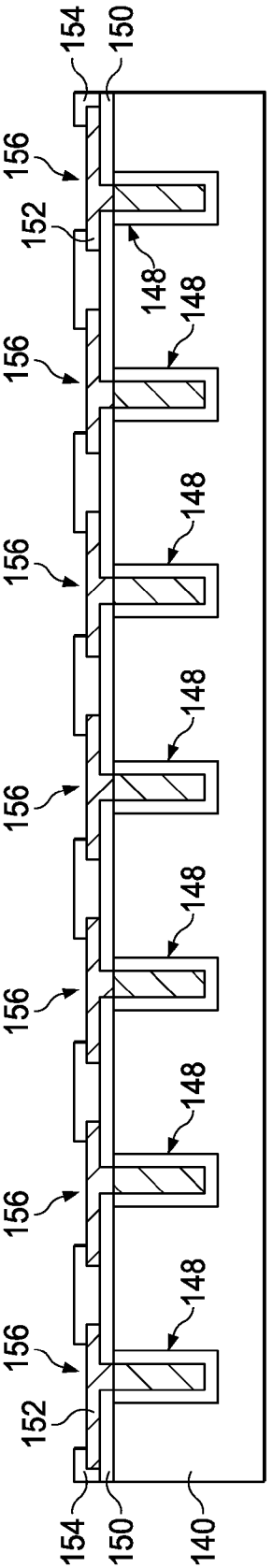
154
150
156
152
148
148
156
148
156
148
156
148
156
148
156
152
154
150
140

FIG. 38

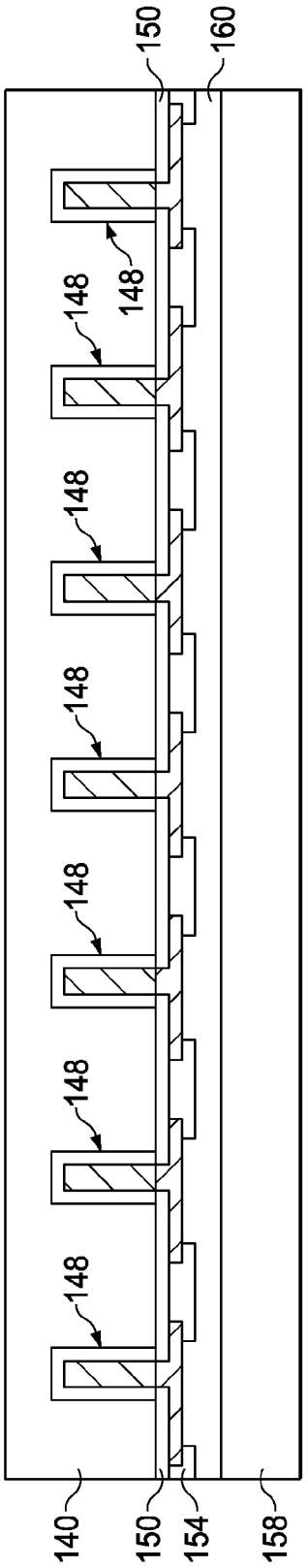
150
160
148
148
148
148
148
148
140
150
154
158

FIG. 39

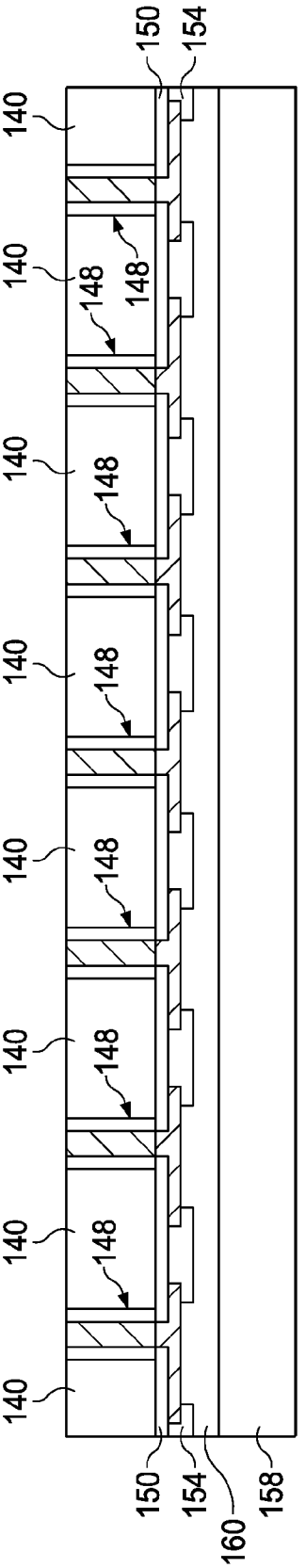
150
154
140
140
148
148
140
148
140
148
140
148
140
148
140
148
140
150
154
160
158

FIG. 40

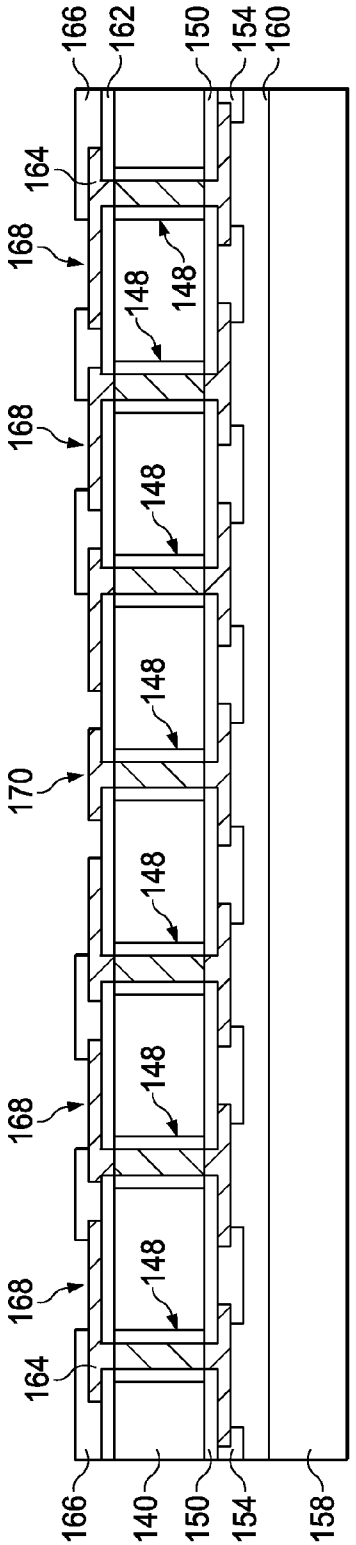
166
162
150
154
160
164
168
148
170
140
158

FIG. 41

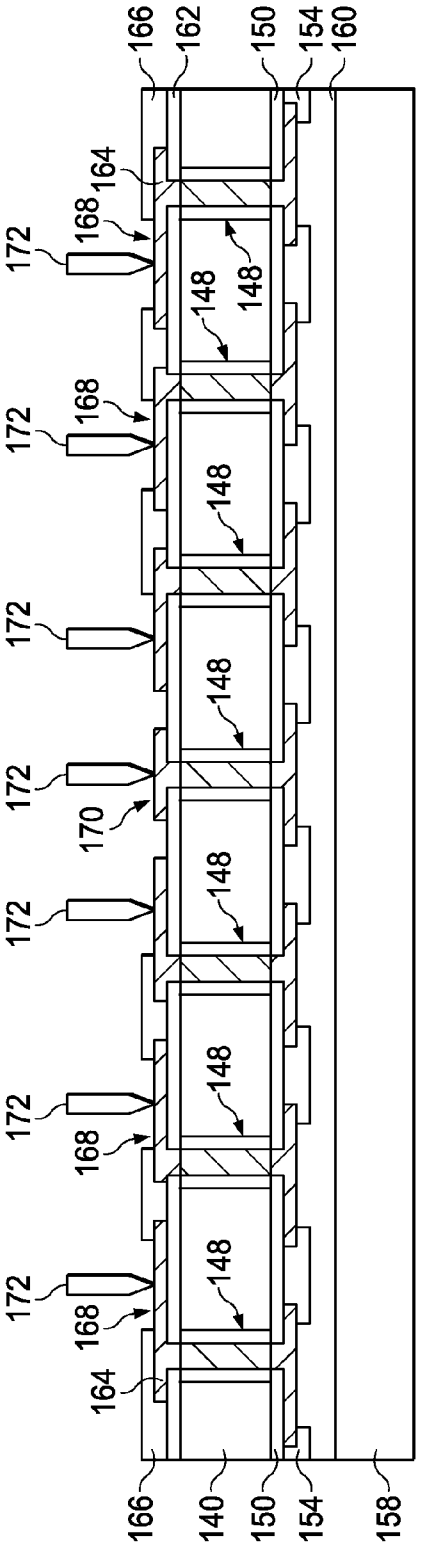
166
162
150
154
160
164
168
172
148
170
140
158

FIG. 42

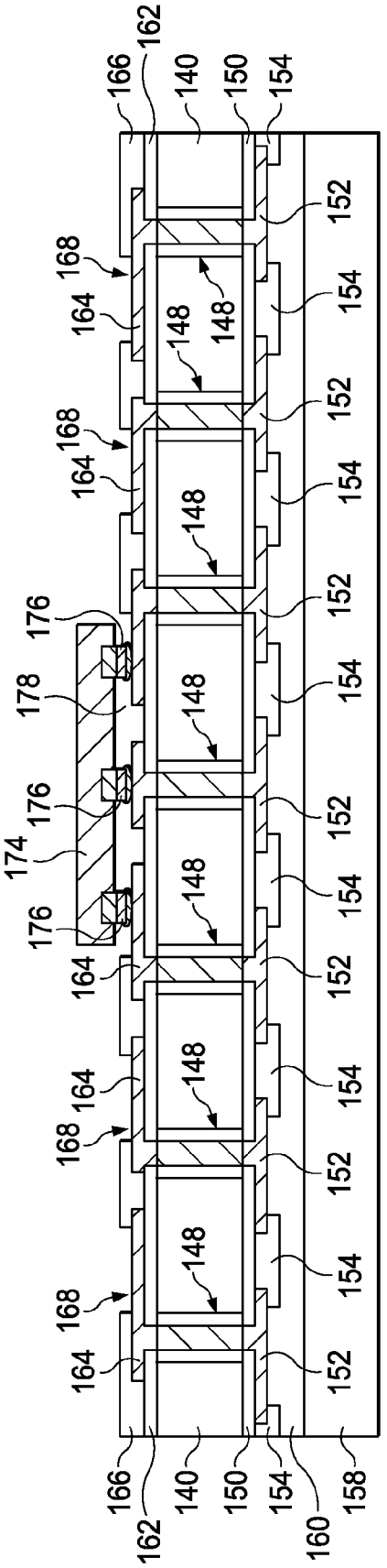
166
162
140
150
154
152
168
164
148
176
178
174
160
158

FIG. 43

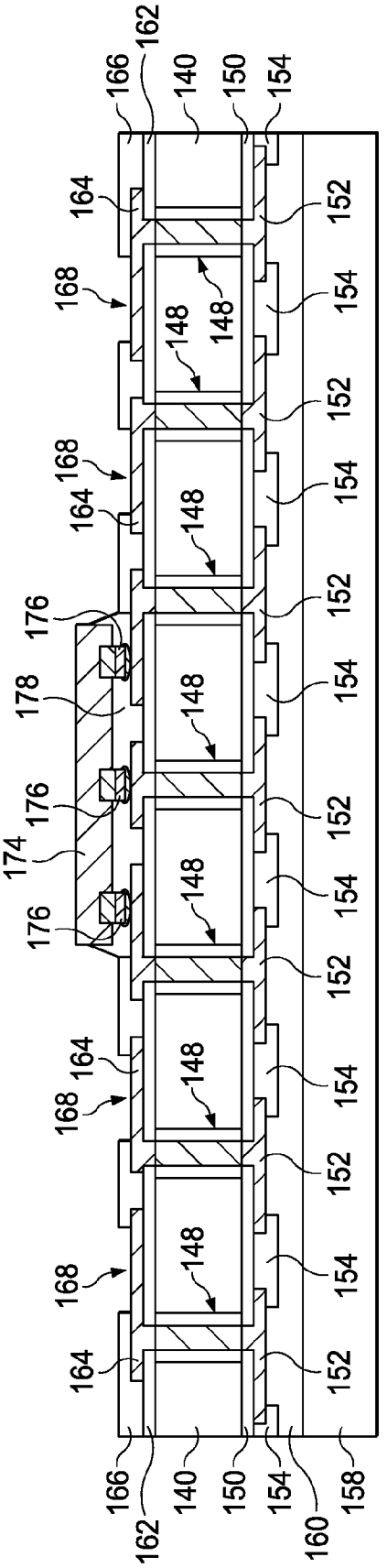
166
162
140
150
154
152
164
168
148
176
178
174
160
158

FIG. 44

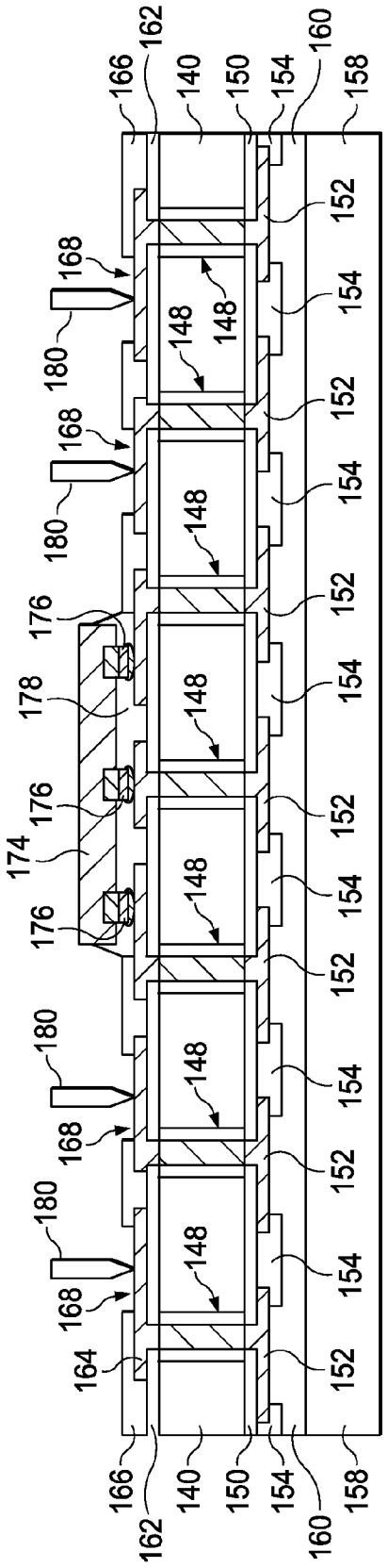
166
162
140
150
154
160
158
152
168
180
148
176
178
174
164

FIG. 45

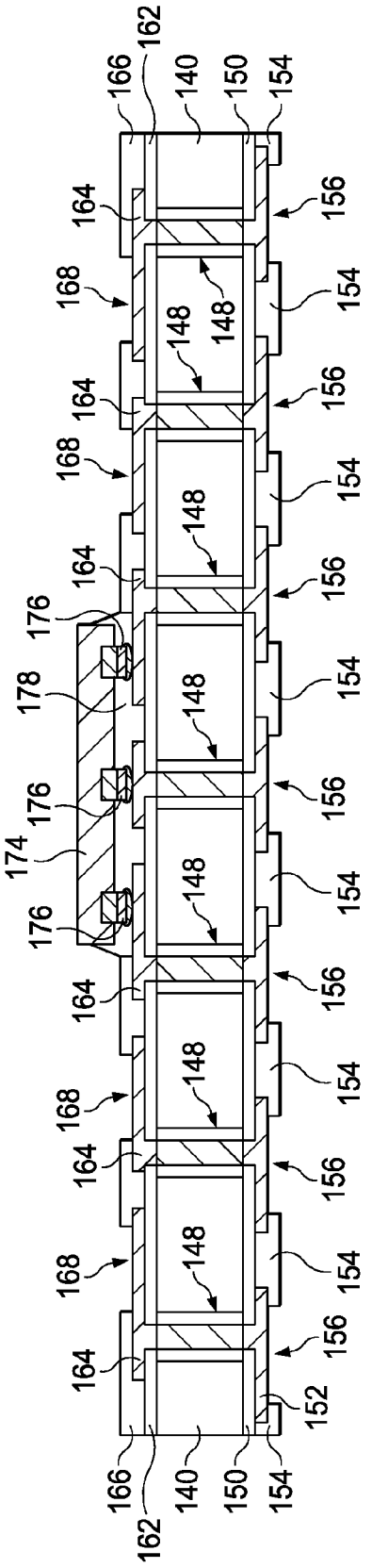
166
162
140
150
154
156
164
168
148
176
178
174

FIG. 46

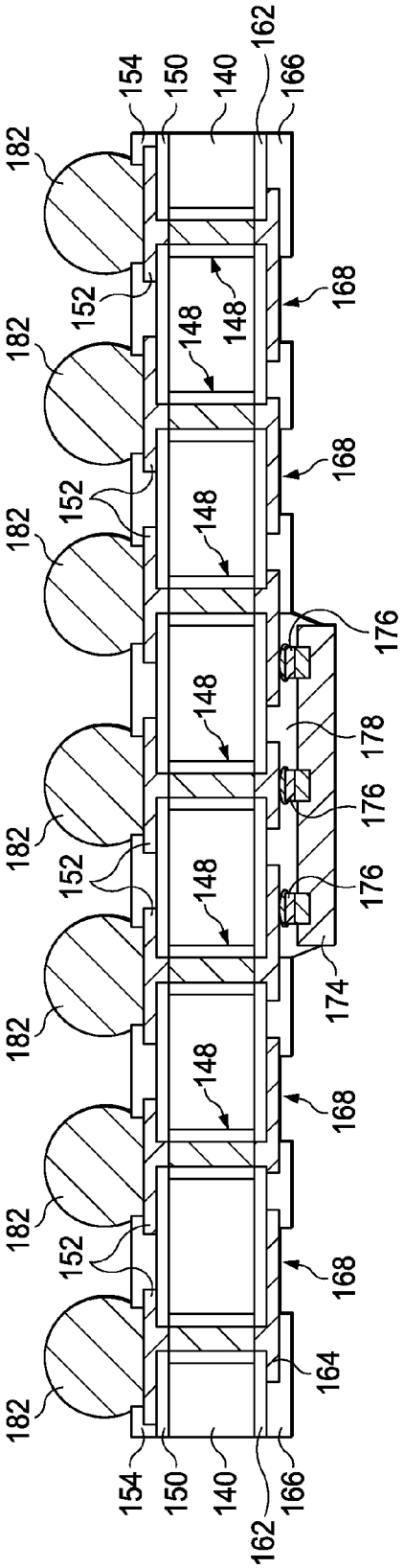
182
154
150
140
162
166
152
148
168
176
178
174
164

FIG. 47

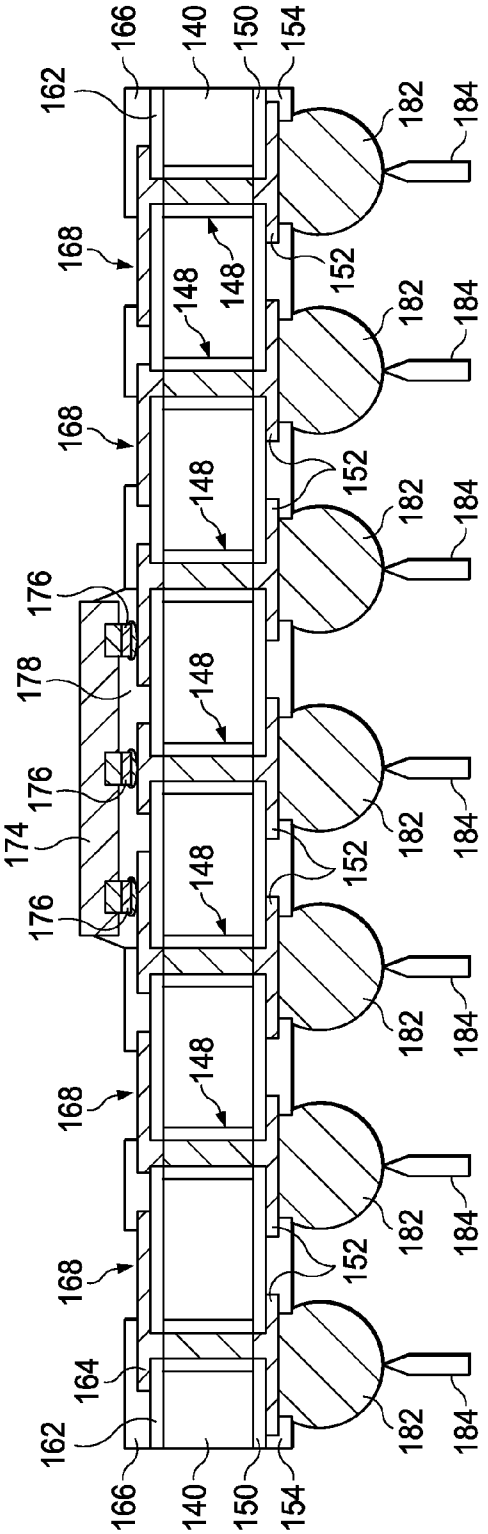
162
166
140
150
154
168
148
152
182
184
176
178
174
164

FIG. 48

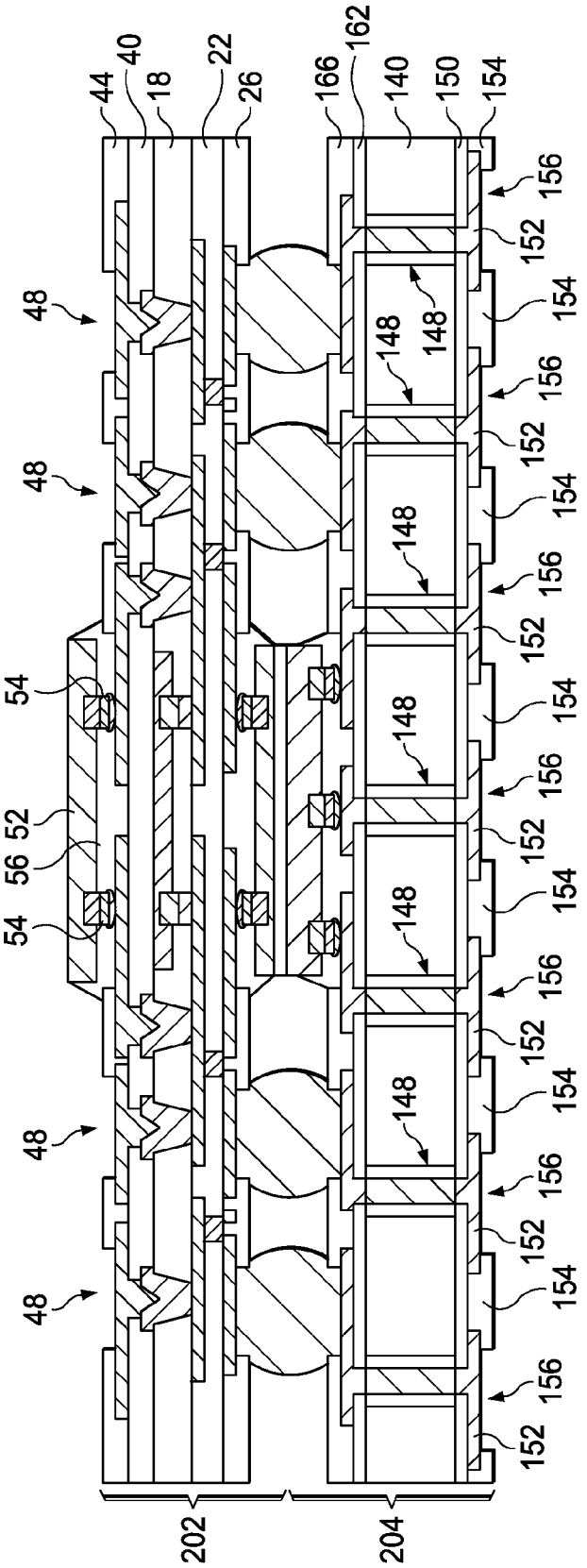
44
40
18
22
26
166
162
140
150
154
156
152
154
148
148
156
152
154
148
156
152
154
148
156
152
154
148
156
152
154
156
152
48
48
48
48
54
52
56
54
202
204

FIG. 49A

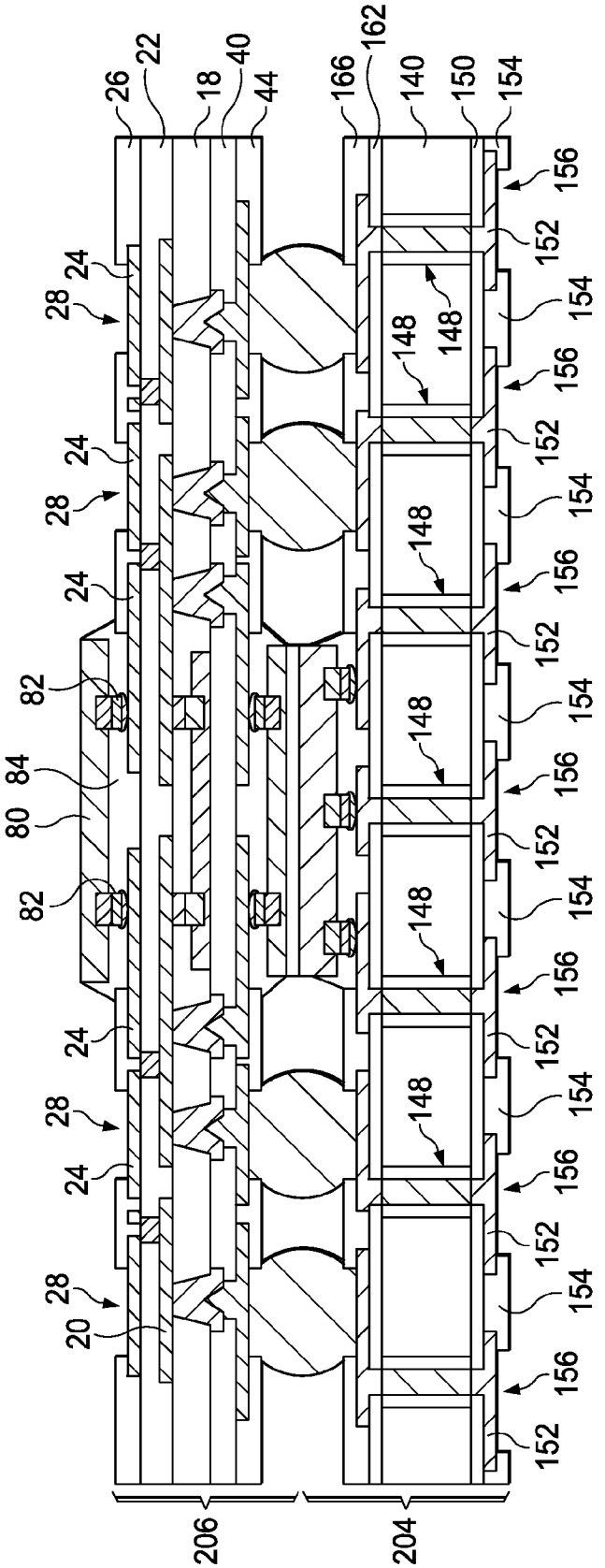
26
22
18
40
44
166
162
140
150
154
156
152
154
148
148
156
152
154
148
156
152
154
148
156
152
154
148
156
152
154
148
156
152
154
156
152
24
28
24
28
24
82
84
80
82
24
28
24
28
20
206
204

FIG. 49B

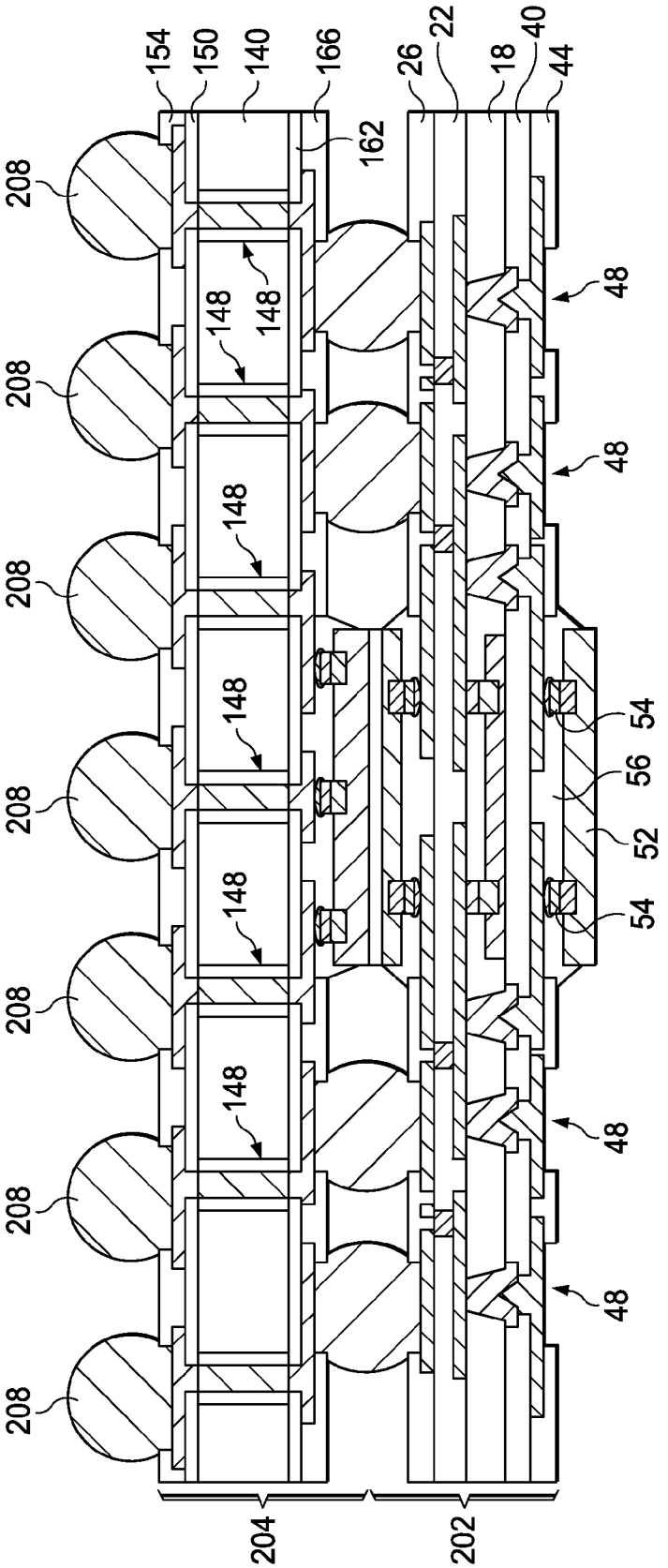

FIG. 50

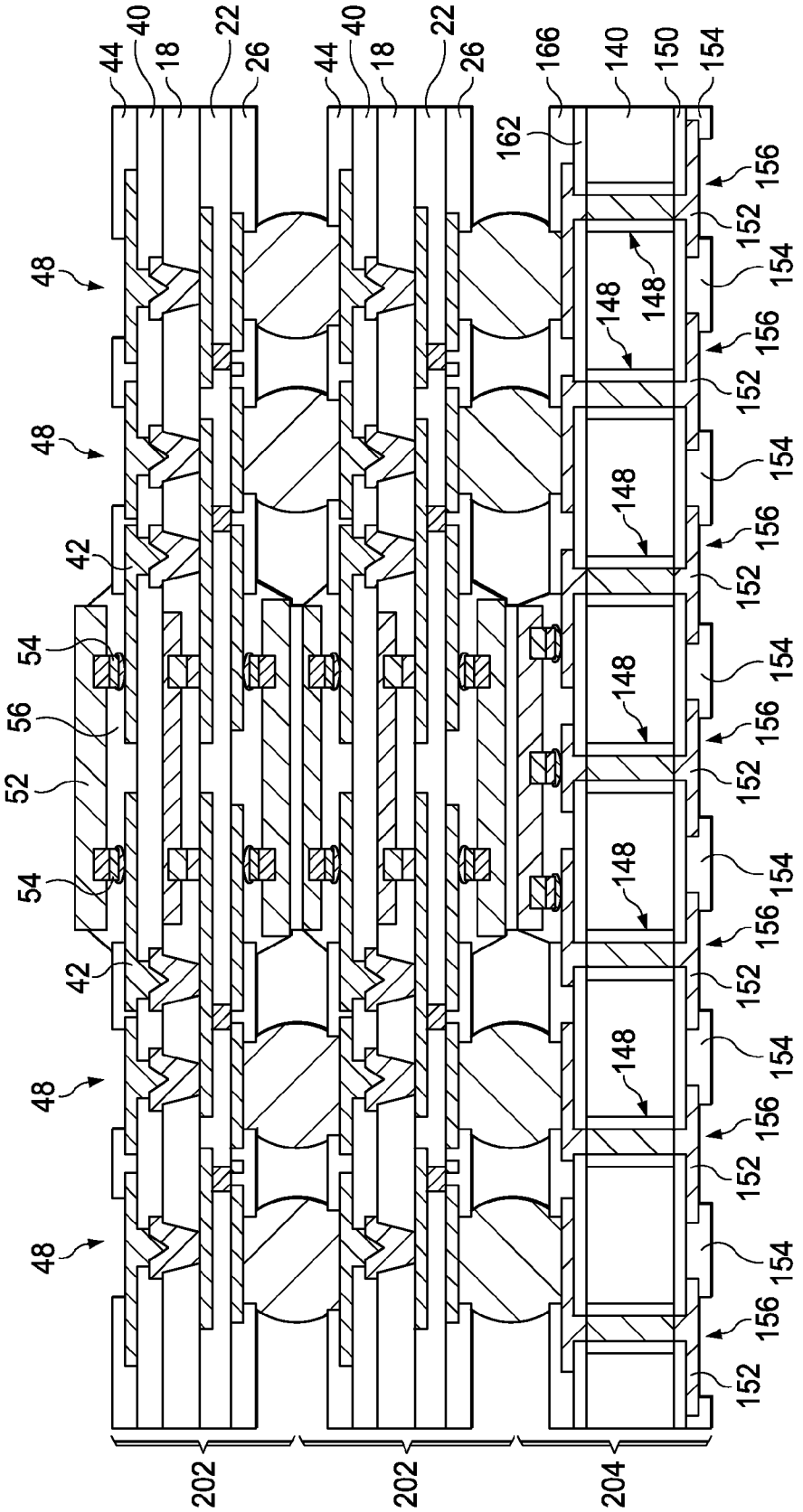
44
40
18
22
26
166
140
150
154
162
156
152
148
42
54
56
52
48
202
204

FIG. 51

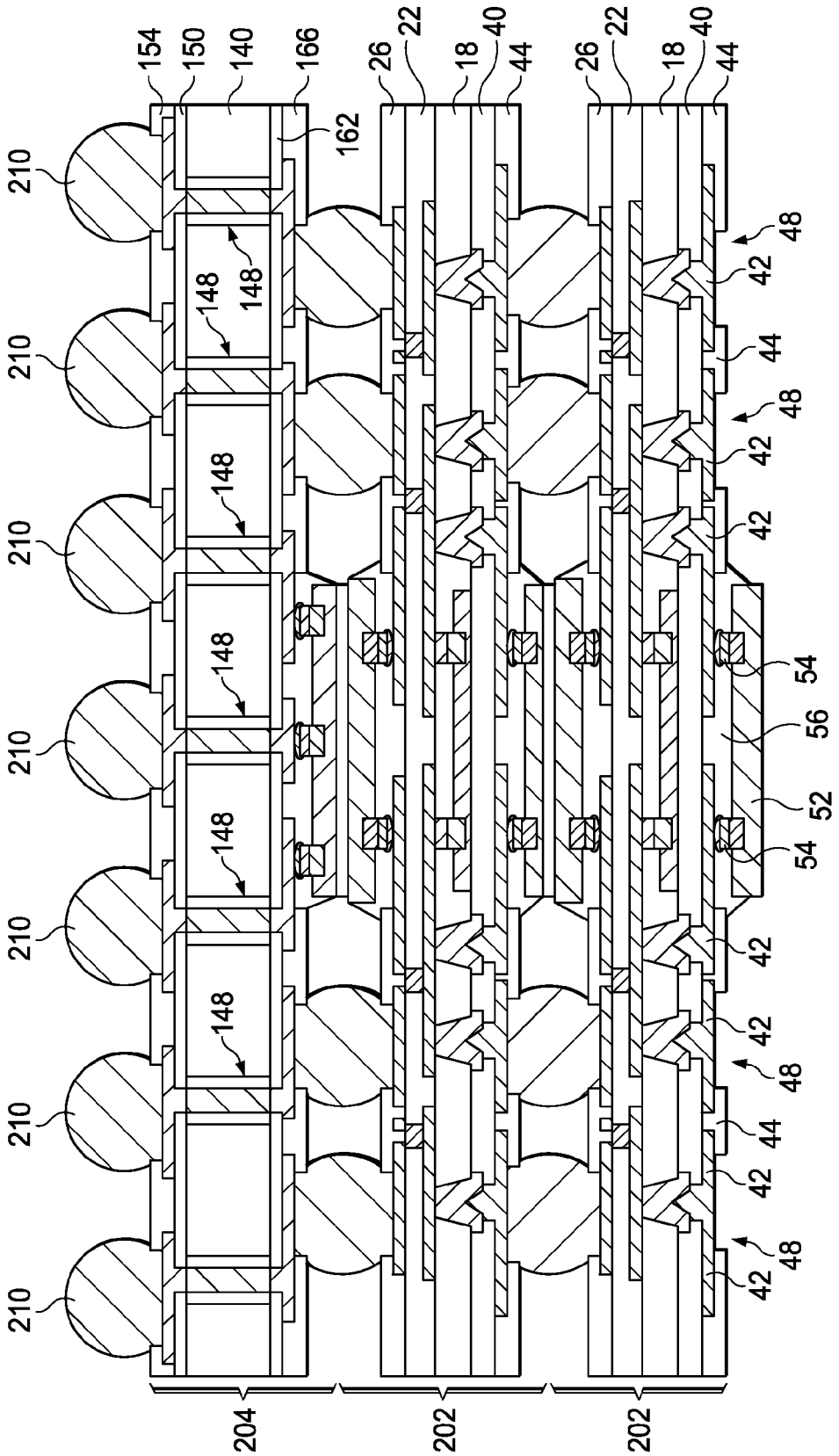

FIG. 52

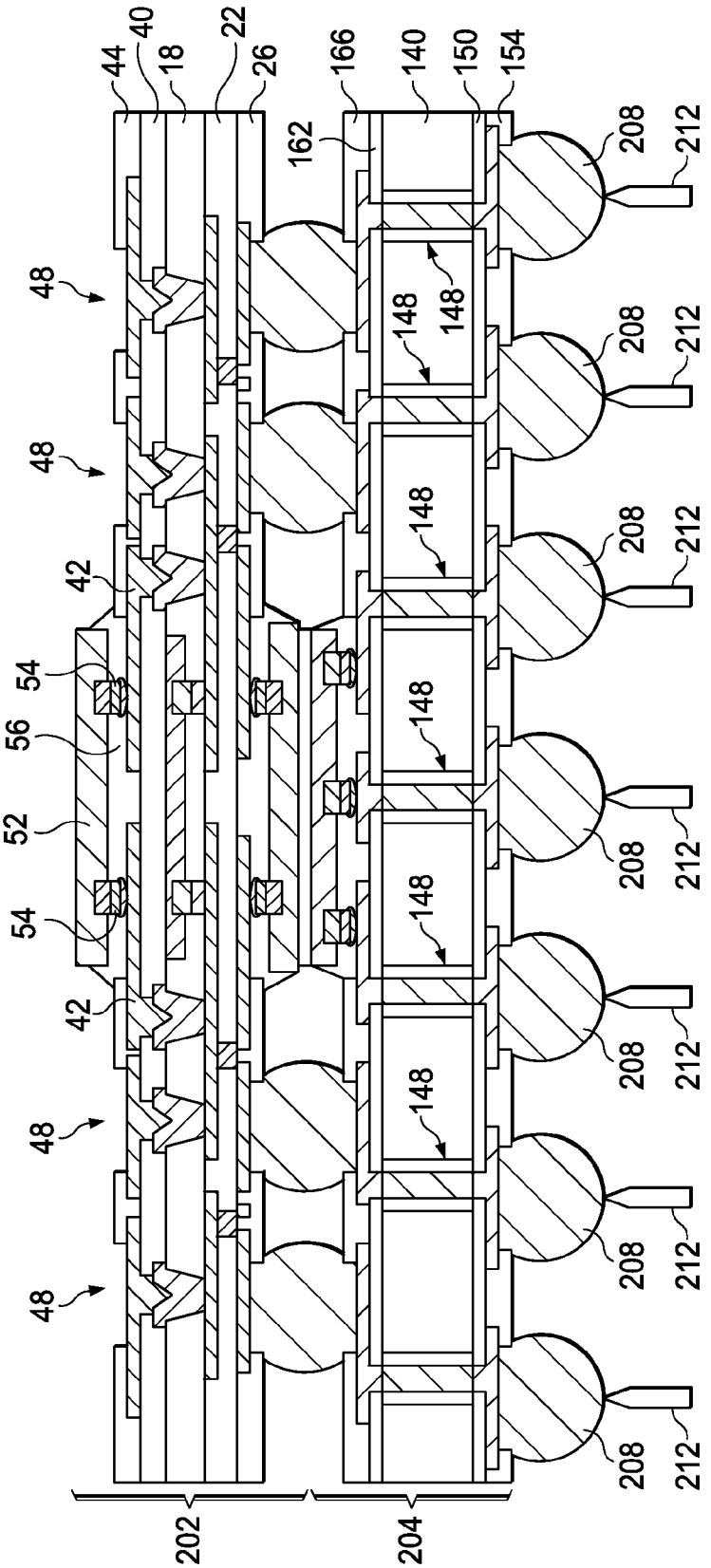
44
40
18
22
26
166
140
150
154
162
48
48
42
54
56
52
54
42
48
48
148
148
148
148
148
148
208
212
202
204

FIG. 53

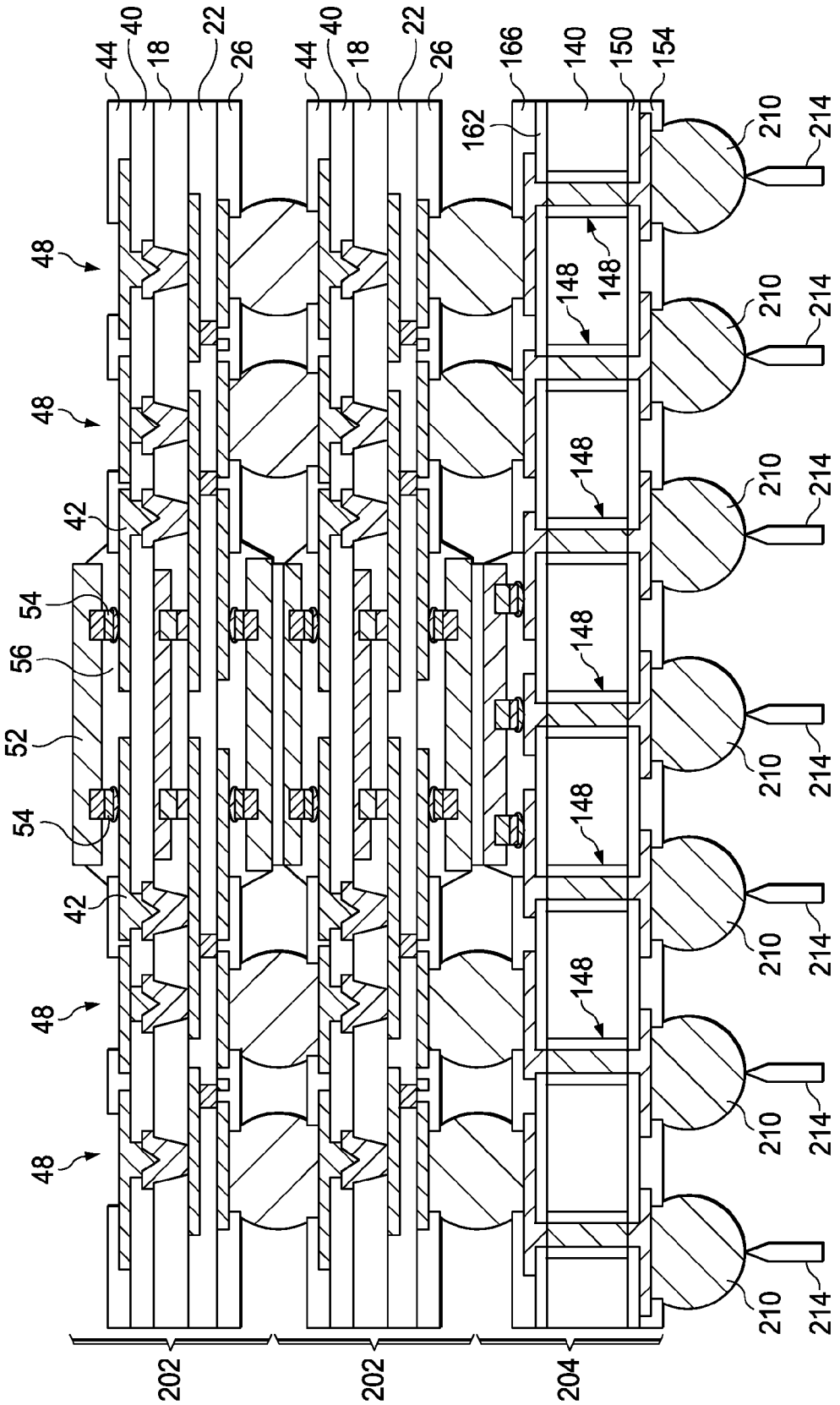
44
40
18
22
26
166
140
150
154
162
48
42
54
56
52
148
210
214
202
204

FIG. 54

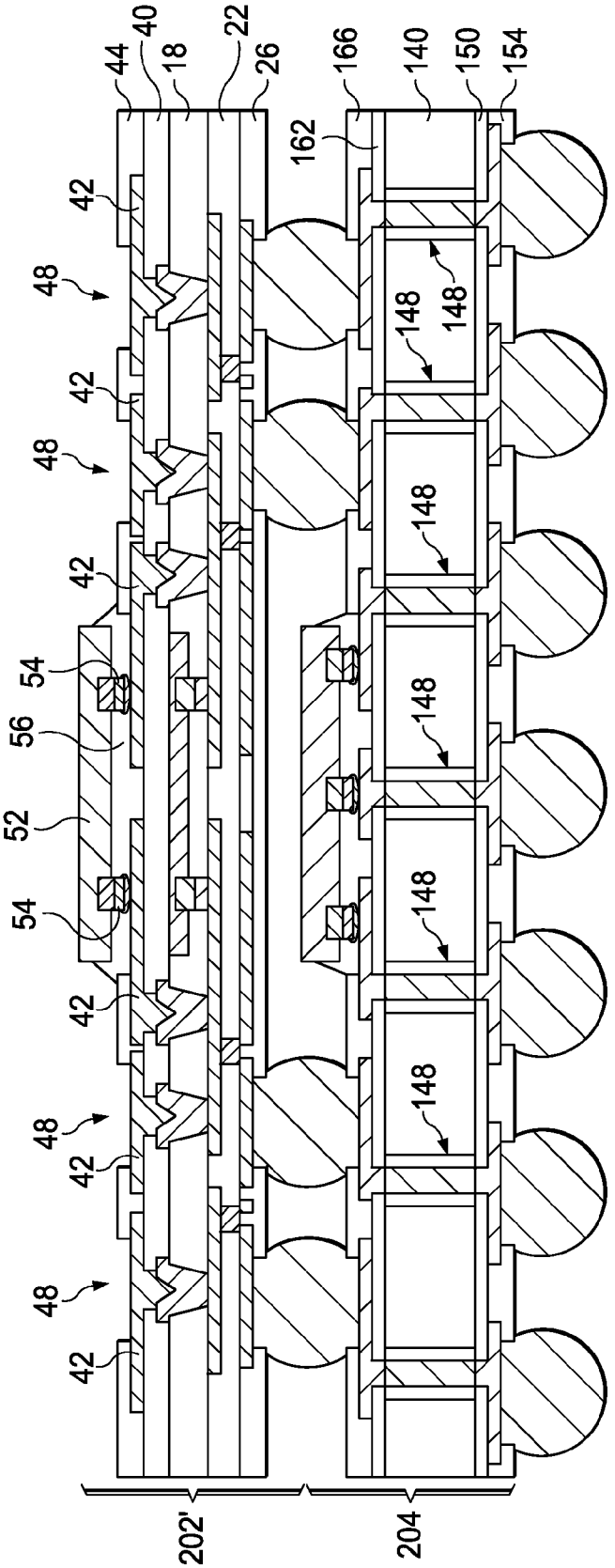

FIG. 55A

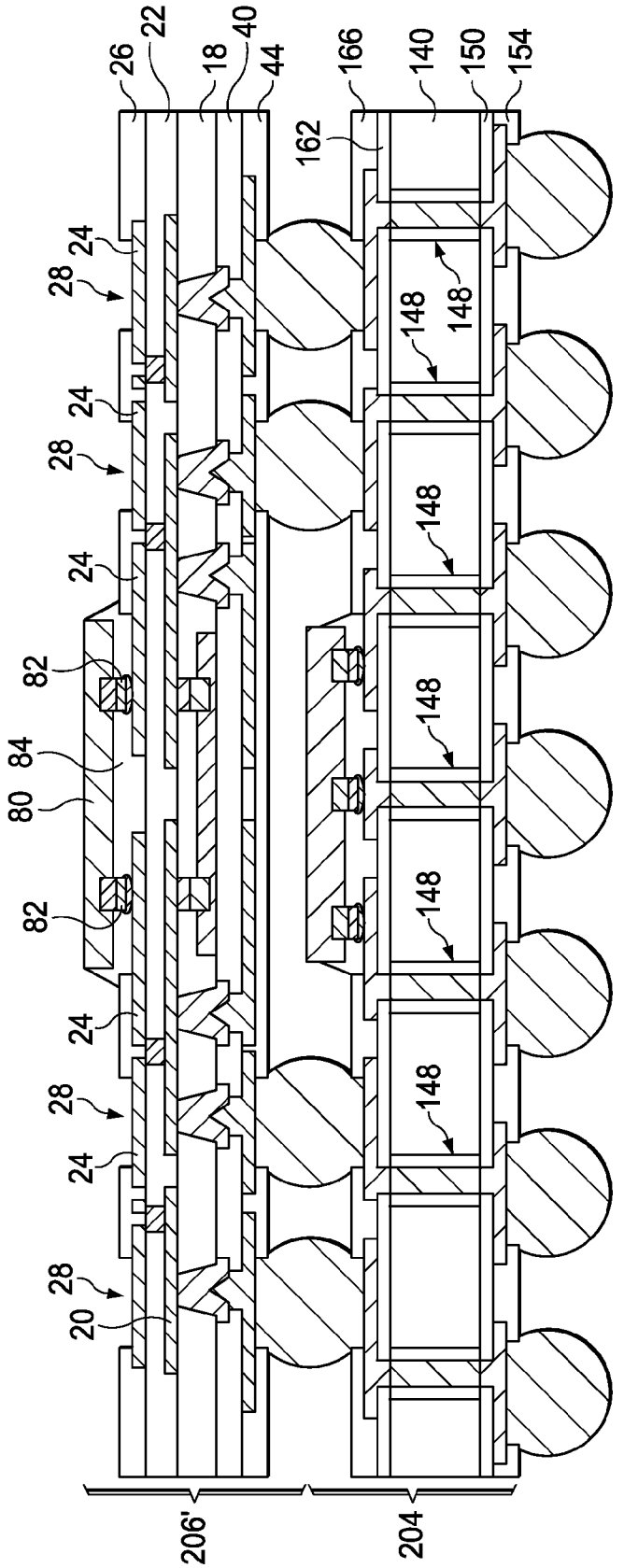

FIG. 55B

PACKAGE-ON-PACKAGE (POP) STRUCTURE HAVING AT LEAST ONE PACKAGE COMPRISING ONE DIE BEING DISPOSED IN A CORE MATERIAL BETWEEN FIRST AND SECOND SURFACES OF THE CORE MATERIAL

BACKGROUND

Electronics can be divided into a simple hierarchy consisting of devices such as integrated circuit (IC) chips, packages, printed circuit boards (PCB) and a system. The package is the interface between an electronic device, such as a computer chip, and a PCB. Devices are made from semiconductor materials such as silicon. Integrated circuits are assembled into a package such as a quad flat pack (QFP), pin grid array (PGA), or ball grid array (BGA), using wire bonding (WB), tape automated bonding (TAB), or flip chip (FC) bumping assembly techniques. The packaged device is then attached either directly to a printed wiring board or to another type of substrate, which is defined as the second level of packaging.

Ball grid array (BGA) packaging technology generally is an advanced semiconductor packaging technology, which is characterized in that a semiconductor chip is mounted on a front surface of a substrate, and a plurality of conductive elements such as solder balls are arranged in a matrix array, customarily referred to as ball grid array, on a back surface of the substrate. The ball grid array allows the semiconductor package to be bonded and electrically connected to an external PCB or other electronic devices. The BGA package may be employed in a memory such as Dynamic Random Access Memory and others.

A basic flip-chip (FC) packaging technology comprises an IC, an interconnect system, and a substrate. A function chip is connected to the substrate with a plurality of solder bumps, wherein the solder bumps forming a metallurgical interconnection between the chip and the substrate. The function chip, the solder bump, and the substrate form a flip-chip package. Further, a plurality of balls form a ball grid array (BGA).

Wire bonding can be used to make the electrical connections from chip components such as chip resistors or chip capacitors to substrate. Two function chips and are stacked on top of a plurality of substrate layers. The chips are connected to the substrate by a plurality of bonding gold wires. Other form of wires such as aluminum wire can be used, too. The function chips, the gold wire, and the substrate form a wire bonding (WB) package.

Package-on-Package (PoP) is an integrated circuit packaging technique to allow vertically combining discrete logic and memory ball grid array (BGA) packages. Two or more packages are installed on top of one another, i.e. stacked, with a standard interface to route signals between them. This allows higher density, for example in the mobile telephone/PDA market.

BRIEF DESCRIPTION OF THE DRAWINGS

For a more complete understanding of the present embodiments, and the advantages thereof, reference is now made to the following descriptions taken in conjunction with the accompanying drawings, in which:

FIGS. **1** through **8** are a first portion of a process for forming a package according to an embodiment;

FIGS. **9** through **17** are a first example of a second portion of a process for forming a package according to an embodiment;

FIGS. **18** through **24** are a second example of a second portion of a process for forming a package according to an embodiment;

FIGS. **25** through **33** are another example of another portion of a process for forming a package according to an embodiment;

FIGS. **34** through **48** are a process for forming a package with an interposer according to an embodiment;

FIGS. **49**A and **49**B are example package-on-package (PoP) structures according to embodiments;

FIG. **50** is a step to form electrical connectors on the PoP structure of FIG. **49**A according to an embodiment;

FIG. **51** is another example PoP structure according to an embodiment;

FIG. **52** a step to form electrical connectors on the PoP structure of FIG. **51** according to an embodiment;

FIG. **53** is a step to test the PoP structure of FIG. **50** according to an embodiment;

FIG. **54** is a step to test the PoP structure of FIG. **52** according to an embodiment; and

FIGS. **55**A and **55**B are further examples of PoP structures according to embodiments.

DETAILED DESCRIPTION OF ILLUSTRATIVE EMBODIMENTS

The making and using of the present embodiments are discussed in detail below. It should be appreciated, however, that the present disclosure provides many applicable inventive concepts that can be embodied in a wide variety of specific contexts. The specific embodiments discussed are merely illustrative of specific ways to make and use the disclosed subject matter, and do not limit the scope of the different embodiments.

Embodiments will be described with respect to a specific context, namely a package-on-package (PoP) structure and methods for forming a PoP structure. Although the example methods are discussed in a particular order, embodiments contemplate that a method may be performed in any logical order.

FIG. **1** shows a first die **10** on a first carrier substrate **12**. A back side of the first die **10** is attached to the first carrier substrate **12** by an adhesive **14**. A front side, or active side, of the first die **10** has conductive features **16** which are electrically coupled to active devices in the first die **10**. In this embodiment, the conductive features **16** are conductive pillars, such as copper, the like, or a combination thereof. In other embodiments, the conductive features **16** may be any structure upon which a metallization layer may be electrically coupled, as discussed later in more detail. The first die **10** can be a logic circuitry die, a memory die, or any other die.

Generally, the first carrier substrate **12** provides temporary mechanical and structural support during subsequent processing steps. The first carrier substrate **12** may comprise, for example, glass, silicon oxide, aluminum oxide, a combination thereof, and/or the like and may be a wafer. The adhesive **14** may be any suitable adhesive, such as ultraviolet (UV) glue, which loses its adhesive property when exposed to UV lights. It should be noted that multiple dies can be attached to the first carrier substrate **12**.

FIG. **2** shows a core material, such as molding compound **18**, applied and cured over the first die **10** and the first carrier substrate **12**. The molding compound **18** can be an epoxy, polyimide, silicone rubber, the like, or a combination thereof. The molding compound **18** can be applied using acceptable techniques, such as compression molding. In FIG. **3**, the molding compound **18** is ground and/or polished to expose

the conductive features **16** on the first die **10**. The grinding and/or polishing may be performed using a chemical mechanical polishing (CMP) process.

FIG. **4** illustrates a front side interlayer dielectric (ILD) and redistribution layer (RDL) structure. A seed layer, such as a copper, titanium, or the like, is deposited on the molding compound **18**, such as by sputtering or another physical vapor deposition (PVD) process. A photo resist is deposited on the seed layer and patterned to expose portions of the seed layer by photolithography. The pattern is for a first metallization layer on the front side. Conductive material of the first metallization layer, such as copper, aluminum, the like, or a combination thereof, is deposited on the exposed seed layer, such as by electroless plating, electroplating, or the like. The photoresist is removed by an ash and/or flush process. The exposed seed layer removed, such as by a wet or dry etch. The remaining conductive material forms the first front side metallization layer **20**, portions of which are electrically coupled to the conductive features **16**.

A first ILD layer **22** is deposited on the front side and over the first metallization layer **20**. The first ILD layer **22** may be a polyimide, polybenzoxazole (PBO), benzocyclobutene (BCB), the like, or a combination thereof. The first ILD layer **22** can be deposited by a coating process, a lamination process, the like, or a combination thereof. Openings may be formed through the first ILD layer **22** to the first metallization layer **20** using acceptable photolithography techniques.

Subsequent metallization layers and ILD layers, such as a second metallization layer **24** and a second ILD layer **26**, may be formed using the same or similar processes as discussed with regard to the first metallization layer **20** and the first ILD layer **22**. Conductive material deposited during the formation of a subsequent metallization layer may be deposited in openings of the previously formed ILD layer to electrically couple respective metallization layers. After forming the topmost ILD layer, the second ILD layer **26** in this embodiment, openings **28** and **30** are formed through the topmost front side ILD layer for connectors coupled between the topmost front side metallization layer, such as the second metallization layer **24**, and another package, another die, and/or another substrate. It should be noted that any number of metallization layers and ILD layers may be formed, and the use of two in this embodiment is used as an example.

FIG. **5** shows the de-bonding of the backside of the intermediate structure from the first carrier substrate **12** and bonding the front side of the intermediate structure to a second carrier substrate **32**. The de-bonding from the first carrier substrate **12** may comprise exposing the adhesive **14** to UV lights, such as a laser, or by exposing the adhesive **14** to a solvent. The front side is bonded by an adhesive **34**. The second carrier substrate **32** may comprise, for example, glass, silicon oxide, aluminum oxide, a combination thereof, and/or the like and may be a wafer. The adhesive **34** may be any suitable adhesive, such as UV glue, which loses its adhesive property when exposed to UV lights.

FIG. **6** illustrates a through molding via (TMV) opening formation. TMV openings **36** are formed through the molding compound **18** to the first front side metallization layer **20** by, for example, a laser technique or a mechanical process like drilling. FIG. **7** shows the TMVs **38** being formed. A seed layer is deposited over the back side of the structure and into the TMV openings **36**. The seed layer can be copper, titanium, the like, or a combination thereof deposited by sputtering, another PVD process, or the like. A photoresist is deposited and patterned exposing the TMV openings **36** and any other pattern for a metallization layer that is desired, such as by acceptable photolithography techniques. A conductive material, such as copper, aluminum, the like, or a combination thereof, is deposited on the back side by electroless plating, electroplating, or the like. The photoresist is removed, such as by an ash and/or flush process. Remaining exposed seed layer portions are removed, such as by a wet or dry etch. TMVs **38** remain along with any further metallization pattern.

FIG. **8** illustrates a back side ILD and RDL structure. FIG. **8** shows first back side ILD layer **40**, a second back side metallization layer **42**, a second ILD layer **44**, and openings **46** and **48** through the second ILD layer **44** to the second back side metallization layer **42**. These may be formed the similar to or in the same manner as the ILD layers and metallization layers on the front side, and therefore, explicit description of the formation of these features is omitted for brevity. Any number of metallization and ILD layers may be formed on the back side.

FIGS. **9** through **17** illustrate a first example method for processing at a package level. FIG. **9** illustrates a probing step to test the first die **10** and the interconnects formed by the metallization layers and ILD layers on the front side and the back side. The second back side metallization layer **42** is probed by pins **50** of a probe card through the openings **46** and **48**. In FIG. **10**, the structure is de-bonded from the second carrier substrate **32**, such as by exposing the adhesive **34** to UV lights, such as a laser, or by exposing the adhesive **34** to a solvent. Further, individual packages are singulated, such as by sawing. Known good packages, such as determined by the probing in FIG. **9**, may subsequently be used during processing.

In FIG. **11**, a second die **52**, such as a memory die having a thickness of less than or equal to 3 mils, is attached through the opening **46** to conductive features in the second back side metallization layer **42**, such as by conductive connectors **54**, like controlled collapse chip connection (C**4**) bumps. The second die **52** may be attached using an acceptable pick-and-place tool and reflowing connectors **54** between the second die **52** and the conductive features in the second back side metallization layer **42**. Accordingly, the connectors **54** may be a bump on trace (BOT). In FIG. **12**, an underfill material **56**, such as liquid epoxy, deformable gel, silicon rubber, the like, or a combination thereof, is dispensed and cured between the second die **52** and the back side of the package, such as between the second die **52** and the second metallization layer **42**.

FIG. **13** shows the formation of conductive connectors **58**, such as ball grid array (BGA) balls, on the front side of the package in the openings **28**. Bond pads may be formed in the openings **28** on the front side of the package, and connectors **58** may be formed on the bond pads. The connectors **58** may be a lead-free solder. In FIG. **14**, the connectors **58** are probed by pins **60** of a probe card to test the structure. Known good packages can be used in further processing.

FIG. **15** shows a third die **62**, such as a memory die having a thickness of less than or equal to 3 mils, attached through the opening **30** to conductive features in the second front side metallization layer **24**. The third die **62** may be attached using an acceptable pick-and-place tool and reflowing connectors **64**, such as C**4** bumps, between the third die **62** and the conductive features in the second front side metallization layer **24**. Accordingly, the connectors **64** may be a BOT. The third die **62** also has a thermal interface material **66** on a back side of the third die **62**. The thermal interface material **66** may be coated on the back side of the third die **62** before the third die **62** was singulated from the wafer in which it was processed. The thermal interface material **66** may be an epoxy, rubber, metal (such as silver or gold), the like, or a combination thereof. In FIG. **16**, an underfill material **68**, such as

liquid epoxy, deformable gel, silicon rubber, the like, or a combination thereof, is dispensed and cured between the third die **62** and the front side of the package, such as between the third die **62** and the second metallization layer **24**. In FIG. **17**, the connectors **58** are probed using pins **70** of a probe card to test the structure. Known good packages can be used in further processing.

FIGS. **18** through **24** illustrate a second example method for processing at a package level. Many of the components in FIGS. **18** through **24** are the same as or similar to components discussed with respect to FIGS. **11** through **17**. A person having ordinary skill in the art will readily understand these similarities, and therefore, some explicit discussion of these components is omitted for brevity.

After processing through FIG. **10**, FIG. **18** shows a second die **80**, such as a memory die having a thickness of less than or equal to 3 mils, attached through the opening **30** to conductive features in the second front side metallization layer **24** by conductive connectors **82**, such as C**4** bumps. In FIG. **19**, an underfill material **84** is dispensed and cured between the second die **80** and the front side of the package, such as between the second die **80** and the second metallization layer **24**.

FIG. **20** shows the formation of conductive connectors **86**, such as BGA balls, on the back side of the package. Bond pads may be formed in the openings **48** on the back side of the package, and connectors **86** may be formed on the bond pads. In FIG. **21**, the connectors **86** are probed by pins **88** of a probe card to test the structure. Known good packages can be used in further processing.

FIG. **22** shows a third die **90**, such as a memory die having a thickness of less than or equal to 3 mils, with a thermal interface material **94** on a back side, and the third die **90** is attached through the opening **46** to conductive features in the second back side metallization layer **42** by conductive connectors **92**, such as C**4** bumps. In FIG. **23**, an underfill material **96** is dispensed and cured between the third die **90** and the back side of the package, such as between the third die **90** and the second metallization layer **42**. In FIG. **24**, the connectors **86** are probed by pins **98** of a probe card to test the structure. Known good packages can be used in further processing.

FIGS. **25** through **33** illustrate an example method for processing at a wafer level. As with the previous examples, many of the components in FIGS. **25** through **33** are the same as or similar to components discussed with respect to previous figures. A person having ordinary skill in the art will readily understand these similarities, and therefore, some explicit discussion of these components is omitted for brevity.

After processing through FIG. **8**, the conductive connectors **110**, such as BGA balls, are formed in openings **48** on the back side of the package, as shown in FIG. **25**. Bond pads may be formed in the openings **48** on the back side of the package, and connectors **110** may be formed on the bond pads. The connectors may be a lead-free solder. In FIG. **26**, the connectors **110** are probed by pins **112** of a probe card to test the structure. Known good packages can be used in further processing.

In FIG. **27**, a second die **114**, such as a memory die having a thickness of less than or equal to 3 mils, with a thermal interface material **118** on a back side is attached through the opening **46** to conductive features in the second back side metallization layer **42** by conductive connectors **116**, such as C**4** bumps. In FIG. **28**, an underfill material **120** is dispensed and cured between the second die **114** and the back side of the package, such as between the second die **114** and the second metallization layer **42**. In FIG. **29**, the connectors **110** are probed by pins **122** of a probe card to test the structure. Known good packages can be used in further processing. In FIG. **30**, the structure is de-bonded from the second carrier substrate **32**, and individual packages are singulated.

FIG. **31** shows a third die **124**, such as a memory die having a thickness of less than or equal to 3 mils, attached through the opening **30** to conductive features in the second front side metallization layer **24** by conductive connectors **126**, such as C**4** bumps. In FIG. **32**, an underfill material **128** is dispensed and cured between the third die **124** and the front side of the package, such as between the third die **124** and the second front side metallization layer **24**. In FIG. **33**, the connectors **110** are probed by pins **130** of a probe card to test the structure. Known good packages can be used in further processing.

FIGS. **34** through **48** illustrate a method of forming an interposer and a die attached to the interposer. Referring to FIG. **34**, a substrate **140** of an interposer is shown with through substrate via (TSV) recesses **142** formed through a front side of the substrate **140**. The substrate **140** generally comprises a material similar to the substrate used to form a die that will be attached to the interposer, such as silicon. While the substrate **140** may be formed of other materials, it is believed that using silicon substrates for the interposer may reduce stress because the coefficient of thermal expansion (CTE) mismatch between the silicon substrates and the silicon typically used for the dies is lower than with substrates formed of different materials. The TSV recesses **142** are formed by, for example, etching, milling, laser techniques, a combination thereof, and/or the like.

FIG. **35** shows the formation of an isolation layer **144** over the front surface of the substrate **140** and in the recesses **142**. The isolation layer **144** can be, for example, silicon oxide, silicon nitride, the like, or a combination thereof. The isolation layer **144** can be formed by, for example, a chemical vapor deposition (CVD) process, a thermal oxidation process, an atomic layer deposition process (ALD), the like, or a combination thereof.

FIG. **36** shows the deposition of a conductive material **146**. A seed layer is deposited over the front surface of the substrate **140** and in the recesses **142**. The seed layer can be copper, titanium, the like, or a combination thereof, and can be deposited by sputtering, another PVD process, the like, or a combination thereof. The conductive material **146**, such as copper, aluminum, tungsten, silver, gold, the like or a combination thereof, is deposited over the seed layer using, for example, electroplating, electroless plating, the like, or a combination thereof.

In FIG. **37**, excess conductive material **146** and isolation layer **144** is removed from the front side of the substrate **140** by, for example, (CMP). Thus, the TSVs **148** comprise a conductive material and an isolation layer between the conductive material and the substrate **140**.

Front side processing continues in FIG. **38** with the formation of a front side RDL. The RDL may comprise any number or combination of metallization layers, ILD layers, vias, and passivation layers. The RDL depicted in FIG. **38** comprises one front side metallization layer **152** and two ILD layers **150** and **154**. A first ILD layer **150** is deposited on the front side of the substrate **140**. The first ILD layer **150** may be a polyimide, PBO, BCB, silicon oxide, the like, or a combination thereof. The first ILD layer **150** can be deposited by a coating process, a lamination process, a CVD process, the like, or a combination thereof. Openings may be formed through the first ILD layer **150** to the TSVs **148** using acceptable photolithography techniques and/or etching. A seed layer, such as a copper, titanium, or the like, is deposited on the first ILD layer **150** and in the openings to the TSVs **148**, such as by sputtering or another physical vapor deposition (PVD) process. A photo

resist is deposited on the seed layer and patterned to expose portions of the seed layer by photolithography. The pattern is of a first metallization layer on the front side. Conductive material of the first metallization layer **152**, such as copper, aluminum, nickel, copper aluminum, tungsten, titanium, the like, or a combination thereof, is deposited on the exposed seed layer, such as by electroless plating, electroplating, or the like. The photoresist is removed by an ash and/or flush process. The exposed seed layer removed, such as by a wet or dry etch. The remaining conductive material forms the first front side metallization layer **152**, portions of which are electrically coupled to the TSVs **148**. A second ILD layer **154** is deposited on the first ILD layer **150** and over the first metallization layer **152**. The second ILD layer **154** may be a polyimide, PBO, BCB, silicon oxide, the like, or a combination thereof. The second ILD layer **154** can be deposited by a coating process, a lamination process, a CVD process, the like, or a combination thereof. Openings **156** may be formed through the second ILD layer **154** to the first metallization layer **152** using acceptable photolithography techniques and/or etching techniques.

In FIG. **39**, the front side of the structure in FIG. **38** is then attached to a carrier substrate **158** by an adhesive **160**. The carrier substrate **158** may comprise, for example, glass, silicon oxide, aluminum oxide, a combination thereof, and/or the like. The adhesive **160** may be any suitable adhesive, such as UV glue.

Back side processing begins as shown in FIG. **40**. In FIG. **40**, the back side of the substrate **140** is ground and/or polished, such as by CMP, and/or etched to expose the TSVs **148** on the back side of the substrate **140** by thinning the substrate **140**. In FIG. **41**, a first ILD layer **162**, a metallization layer **164**, and a second ILD layer **166** are formed the same as or similar to corresponding components discussed with respect to the front side of the substrate **140** in FIG. **38**. Any number of ILD layer and metallization layers may be formed. Openings **168** and **170** are formed through the second ILD layer **166** using acceptable photolithography techniques and/or etching techniques.

In FIG. **42**, the metallization layer **164** on the back side is probed by pins **172** of a probe card through the openings **168** and **170** for testing. Known good interposers can be used for further processing.

In FIG. **43**, a die **174**, such as a logic circuitry die, is attached through the opening **170** by the conductive connectors **176**, such as C4 bumps. The die **174** may be known good dies attached using a pick-and-place tool, and the conductive connectors **176** may be reflowed. The connectors **176** are attached to conductive features in the back side metallization layer **164**, and thus, the die **174** uses BOT technology. In FIG. **44**, an underfill material **178** is dispensed and cured between the die **174** and the interposer, for example, the back side metallization layer **164**. The underfill material **178** may be a liquid epoxy, deformable gel, silicon rubber, a combination thereof, and/or the like dispensed using acceptable dispensing equipment. In FIG. **45**, the back side metallization layer **164** is probed through openings **168** by pins **180** of a probe card for testing. Known good dies and interposers can be used for further processing.

FIG. **46** shows the de-bonding of the front side of the interposer from the carrier substrate **158** and singluation of individual interposers. The de-bonding from the carrier substrate **158** may comprise exposing the adhesive **160** to UV lights, such as a laser, or by exposing the adhesive **160** to a solvent. FIG. **47** illustrates the formation of conductive connectors **182**, such as BGA balls, on the front side of the interposer. Bond pads may be formed in the openings **156** on the front side of the interposer, and connectors **182** may be formed on the bond pads. The connectors may be a lead-free solder. In FIG. **48**, the connectors **182** are probed by pins **184** of a probe card to test the structure. Known good interposers and dies can be used in further processing.

In FIGS. **49**A and **49**B, packages are stacked to form the PoP structure. In FIG. **49**A, a package **202** comprising a first die encased in molding compound, a second die on a back side of the package, and a third die on a front side of the package is stacked on an interposer package **204** comprising a die on a top surface of an interposer. The package **202** can be the package formed in FIG. **17**, and the interposer package **204** can be the package formed in FIG. **48**. In FIG. **49**B, a package **206** comprising a first die encased in molding compound, a second die on a front side of the package, and a third die on a back side of the package is stacked on an interposer package **204** comprising a die on a top surface of an interposer. The package **202** can be the package formed in FIGS. **24** and **33**, and the interposer package **204** can be the package formed in FIG. **48**. In FIGS. **49**A and **49**B, the package **202** and **206**, respectively, is attached to the interposer package **204** with conductive connectors, such as BGA balls, coupling a metallization layer on a back side of the interposer. The conductive connectors are then reflowed to more permanently attach the packages.

In FIG. **50**, the PoP structure of FIG. **49**A, for example, has conductive connectors **208**, such as BGA balls, formed coupled to a metallization layer on a front side of the interposer of the interposer package **204**. The connectors **208** may be formed before the packages **202** and **204** are stacked, such as described in FIG. **13**, or after the packages **202** and **204** are stacked, as shown in FIG. **50**. Further, the PoP structure of **49**B can similarly have conductive connectors formed, although not explicitly depicted.

FIG. **51** shows that multiple packages **202** (or packages **206**) can be stacked in the PoP structure. In FIG. **52**, connectors **210**, such as BGA balls, formed coupled to a metallization layer on a front side of the interposer of the interposer package **204**, similar to FIG. **50**.

In FIGS. **53** and **54**, the PoP structures of FIGS. **50** and **52** have connectors **208** and **210** probed by pins **212** and **214** of a probe card for testing the PoP structures, respectively.

Embodiments may achieve a more efficient use of space by placing a die within a substrate of a package. By placing the die within the substrate of a package, another substrate may not be required to have the die on a surface.

An embodiment is a package-on-package (PoP) structure. The structure comprises a first package and a second package. The first package comprises a first die, a second die, and a first core material. The first core material has a first surface and a second surface opposite the first surface. A first redistribution layer (RDL) is on the first surface of the first core material, and a second RDL is on the second surface of the first core material. The first die is disposed in the first core material between the first surface of the first core material and the second surface of the first core material. The second die is coupled to one of the first RDL and the second RDL. The second package comprises a third die and an interposer. The interposer has a first side and a second side opposite the first side. The third die is coupled to the second side of the interposer. The first package is coupled to the second package by first electrical connectors coupled to the second side of the interposer and the first RDL.

Another embodiment is a PoP structure. The structure comprises an interposer, a first die, a first substrate comprising a second die, and a third die. The interposer has a first side and a second side opposite the first side. The first die is on the

second side of the interposer. The first substrate is on and coupled to the second side of the interposer by first electrical connectors. The first substrate comprises a first core material, a first RDL, the second die, and a second RDL. The first core material has a first surface and a second surface. The first RDL is on the first surface of the first core material, and the first RDL is coupled to the first electrical connectors. The second die is disposed in the first core material between the first surface of the first core material and the second surface of the first core material. The second RDL is on the second surface of the first core material. The third die is on the first substrate.

A further embodiment is a method for forming a PoP structure. The method comprises applying a first molding compound on a first die, first electrical connectors electrically coupled to the first die being exposed through a first surface of the first molding compound; forming a first redistribution layer (RDL) on the first surface of the first molding compound, the first RDL on the first molding compound being electrically coupled to the first electrical connectors; forming a second RDL on a second surface of the first molding compound; attaching a second die to one of the first RDL on the first molding compound and the second RDL on the first molding compound; and attaching second electrical connectors to one of the first RDL on the first molding compound and the second RDL on the first molding compound and to a first side of an interposer, the interposer having a third die on the first side of the interposer

Although the present embodiments and their advantages have been described in detail, it should be understood that various changes, substitutions and alterations can be made herein without departing from the spirit and scope of the disclosure as defined by the appended claims. For example, some of the steps and components of PoP structures depicted herein may be omitted. FIGS. **55**A and **55**B show examples. The modified packages **202'** and **206'** comprise one less die that the packages **202** and **206** in FIGS. **49**A and **49**B, respectively. A person having ordinary skill in the art will readily understand how to achieve this PoP structure based on this disclosure, and thus, further explicit description is omitted for brevity.

Moreover, the scope of the present application is not intended to be limited to the particular embodiments of the process, machine, manufacture, composition of matter, means, methods and steps described in the specification. As one of ordinary skill in the art will readily appreciate from the disclosure, processes, machines, manufacture, compositions of matter, means, methods, or steps, presently existing or later to be developed, that perform substantially the same function or achieve substantially the same result as the corresponding embodiments described herein may be utilized according to the present disclosure. Accordingly, the appended claims are intended to include within their scope such processes, machines, manufacture, compositions of matter, means, methods, or steps.

What is claimed is:

1. A package-on-package (PoP) structure comprising:

an interposer having a semiconductor substrate with a first side and a second side opposite the first side, through substrate vias through the semiconductor substrate electrically coupling a first metallization pattern on the first side of the semiconductor substrate to a second metallization pattern on a second side of the semiconductor substrate;

a first die on the second side of the interposer and coupled to the second metallization pattern with first electrical connectors comprising reflowable material;

a first substrate on and coupled to the second side of the interposer by second electrical connectors, the first substrate comprising:

a first core material consisting of a single material molding compound and having a first surface and a second surface;

a first redistribution layer (RDL) on the first surface of the first core material, the first RDL being coupled to the second electrical connectors;

a second die disposed in the first core material between the first surface of the first core material and the second surface of the first core material, conductive pillars directly coupled to the second die and having surfaces that are co-planar with at least one of the first surface of the first core material and the second surface of the first core material, the molding compound adjoining a surface of the second die perpendicular to at least one of the first surface of the core material and the second surface of the core material; and

a second RDL on the second surface of the first core material;

a third die coupled to the second RDL of the first substrate with third electrical connectors comprising reflowable material; and

a fourth die coupled to the first RDL of the first substrate with fourth electrical connectors comprising reflowable material.

2. The PoP structure of claim **1**, wherein the first substrate comprises through core vias in the first core material extending from the first surface of the first core material to the second surface of the first core material, the through core vias electrically coupling the first RDL and the second RDL.

3. The PoP structure of claim **1**, wherein a thermal interface material is between the fourth die and the first die.

4. The PoP structure of claim **1** further comprising:

a second substrate on the first substrate, the second substrate being coupled to the second RDL by fifth electrical connectors, the second substrate comprising:

a second core material having a first surface and a second surface;

a first RDL on the first surface of the second core material, the first RDL being coupled to the fifth electrical connectors;

a fifth die disposed in the second core material between the first surface of the second core material and the second surface of the second core material; and

a second RDL on the second surface of the second core material; and

a sixth die on the second substrate.

5. A package-on-package (PoP) structure comprising:

a first package comprising a first substrate, a first die, and a second die, the first die being mechanically and electrically attached to the first substrate by first connectors, the first connectors comprising a solder material, the second die being mechanically and electrically attached to the first substrate by second connectors, the second connectors comprising a solder material, the first substrate comprising:

a first molding compound core consisting of a single material molding compound and having a first surface and a second surface,

a third die in the first molding compound core between the first surface and the second surface, the third die having lateral surfaces adjoining the first molding compound core, conductive pillars directly coupled to the third die and having surfaces that are co-planar

with at least one of the first surface of the first molding compound core and the second surface of the first molding compound core,

a first redistribution layer (RDL) on the first surface of the first molding compound core, the first connectors being mechanically and electrically attached to the first RDL, and

a second RDL on the second surface of the first molding compound core, through core vias in the first molding compound core electrically coupling the first RDL and the second RDL, the second connectors being mechanically and electrically attached to the second RDL; and

a second package mechanically and electrically attached to the first RDL, the second package comprising:

an interposer having a silicon substrate with a first side and a second side opposite the first side, a first metallization pattern on the first side of the silicon substrate being mechanically and electrically attached to the first RDL by third connectors, and

a fourth die mechanically and electrically attached to the first metallization pattern by fourth connectors.

6. The PoP structure of claim **5**, wherein an active side of the second die faces the second RDL.

7. The PoP structure of claim **5**, wherein an active side of the second die faces the first RDL.

8. The PoP structure of claim **5** further comprising:

a third package mechanically and electrically attached to the second RDL, the third package comprising a second substrate comprising:

a second molding compound core having a third surface and a fourth surface,

a fifth die in the second molding compound core between the third surface and the fourth surface, the fourth die having lateral surfaces adjoining the second molding compound core,

a third RDL on the third surface of the second molding compound core, and

a fourth RDL on the fourth surface of the second molding compound core.

9. A package-on-package (PoP) structure comprising:

a first package comprising a first die, a second die, a third die, and a first core material, the first core material consisting of a single material molding compound and having a first surface and a second surface opposite the first surface, a first redistribution layer (RDL) of the first package being on the first surface of the first core material, and a second RDL of the first package being on the second surface of the first core material, the first die being disposed in the first core material between the first surface of the first core material and the second surface of the first core material, conductive pillars directly coupled to the first die and having surfaces that are co-planar with at least one of the first surface of the first core material and the second surface of the first core material, the molding compound adjoining at least one lateral surface of the first die, the at least one lateral surface of the first die extending in a direction perpendicular to at least one of the first surface of the first core material and the second surface of the first core material, the second die being coupled to the first RDL of the first package by first conductive connector bumps, the third die being coupled to the second RDL of the first package by second conductive connector bumps; and

a second package comprising a fourth die and an interposer, the interposer having a semiconductor substrate with a first side and a second side opposite the first side, a first metallization pattern being on the first side of the semiconductor substrate, a second metallization pattern being on the second side of the semiconductor substrate, through vias being through the semiconductor substrate to electrically couple the first metallization pattern to the second metallization pattern, the fourth die being coupled to the second metallization pattern of the interposer, the first package being coupled to the second package by first electrical connectors coupled to the second metallization pattern of the interposer and the first RDL of the first package.

10. The PoP structure of claim **9**, wherein a thermal interface material disposed between the fourth die and the second die.

11. The PoP structure of claim **9** further comprising a third package comprising a fifth die, a sixth die, and a second core material, the second core material having a first surface and a second surface opposite the first surface, a first RDL of the third package being on the first surface of the second core material, and a second RDL of the third package being on the second surface of the second core material, the fifth die being disposed in the second core material between the first surface of the second core material and the second surface of the second core material, the sixth die being coupled to one of the first RDL of the third package and the second RDL of the third package, the third package being coupled to the first package by second electrical connectors coupled to the first RDL of the third package and the second RDL of the first package.

12. The PoP structure of claim **9**, wherein an active surface of the first die faces the second surface of the first core material, the conductive pillars being electrically coupled to the active surface, the surfaces of the conductive pillars being co-planar with the second surface of the first core material and being electrically coupled to the second RDL.

13. The PoP structure of claim **9**, wherein an active surface of the first die faces the first surface of the first core material, the conductive pillars being electrically coupled to the active surface, the surfaces of the conductive pillars being co-planar with the first surface of the first core material and being electrically coupled to the first RDL.

* * * * *