US007241641B2

(12) **United States Patent**
Savastiouk et al.

(10) **Patent No.: US 7,241,641 B2**
(45) **Date of Patent: Jul. 10, 2007**

(54) **ATTACHMENT OF INTEGRATED CIRCUIT STRUCTURES AND OTHER SUBSTRATES TO SUBSTRATES WITH VIAS**

(75) Inventors: **Sergey Savastiouk**, San Jose, CA (US); **Sam Kao**, San Mateo, CA (US)

(73) Assignee: **Tru-Si Technologies, Inc.**, Sunnyvale, CA (US)

(*) Notice: Subject to any disclaimer, the term of this patent is extended or adjusted under 35 U.S.C. 154(b) by 0 days.

(21) Appl. No.: **11/253,492**

(22) Filed: **Oct. 19, 2005**

(65) **Prior Publication Data**

US 2006/0040423 A1 Feb. 23, 2006

Related U.S. Application Data

(60) Division of application No. 10/798,540, filed on Mar. 10, 2004, which is a continuation-in-part of application No. 10/739,788, filed on Dec. 17, 2003, now Pat. No. 7,049,170.

(51) **Int. Cl.**
H01L 21/44 (2006.01)

(52) **U.S. Cl.** **438/106**; 438/106; 438/107; 438/108; 257/E21.511

(58) **Field of Classification Search** ..... None
See application file for complete search history.

(56) **References Cited**

U.S. PATENT DOCUMENTS

5,391,514 A 2/1995 Gall et al.
5,611,140 A * 3/1997 Kulesza et al. 29/832
6,163,456 A 12/2000 Suzuki et al.
6,165,885 A 12/2000 Gaynes et al.
6,175,158 B1 1/2001 Degani et al.
6,190,940 B1 2/2001 DeFelice et al.

(Continued)

FOREIGN PATENT DOCUMENTS

DE 195 31 158 A1 2/1997

(Continued)

OTHER PUBLICATIONS

Ekstrom; Bjorn "Thin Film Silicon Substrates For Lead Frame Packages" Advancing Microelectronics—May/Jun. 2003, pp. 6-7.

(Continued)

Primary Examiner—Walter Lindsay, Jr.
Assistant Examiner—Kyoung Lee
(74) *Attorney, Agent, or Firm*—Michael Shenker; MacPherson Kwok Chen & Heid LLP

(57) **ABSTRACT**

Vias (**210**, **210**B) are formed in a surface of a substrate. At least portions of contact pads (**139**, **350**) are located in the vias. Contact pads (**150**, **340**) of an integrated circuit structure are inserted into the vias and attached to the contact pads (**139**, **350**) of the substrate. The vias provide a strong, reliable mechanical and electrical connection. A via may expose not only a contact pad (**350**) in the substrate but also a surrounding region. Solder (**930**) wets the contact pad better than the surrounding region, resulting in a stronger solder joint and better electrical conductivity. Alternatively, the contact may include multiple conductive layers (**910.1**, **910.2**), with the top layer (**910.2**) being more solder wettable than the bottom layer (**910.1**) and the top layer covering only a portion of the bottom layer.

27 Claims, 13 Drawing Sheets

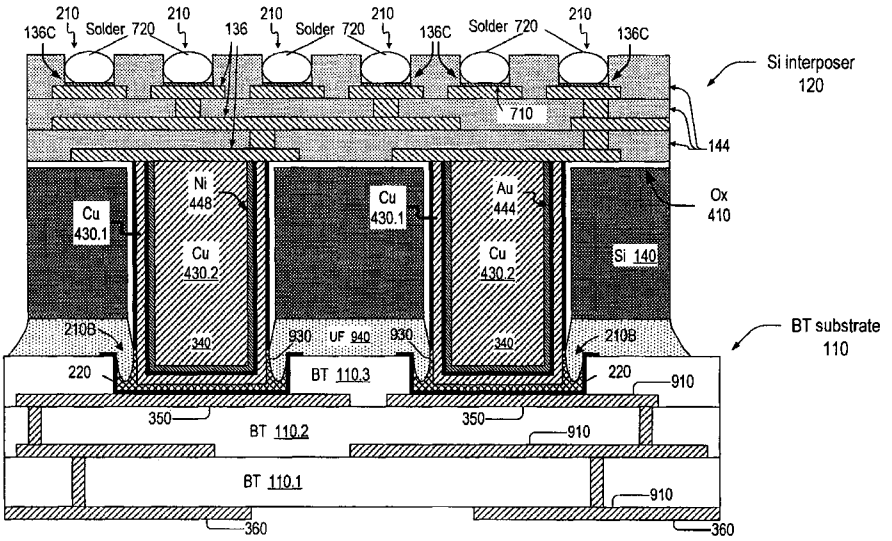

U.S. PATENT DOCUMENTS

6,322,903	B1 *	11/2001	Siniaguine et al.	428/617
6,498,074	B2	12/2002	Siniaguine et al.	
6,498,381	B2	12/2002	Halahan et al.	
6,661,088	B1	12/2003	Yoda et al.	
6,903,443	B2	6/2005	Farnworth et al.	
2001/0019178	A1 *	9/2001	Brofman et al.	257/780
2002/0036340	A1	3/2002	Matsuo et al.	
2002/0048916	A1	4/2002	Yangida	
2002/0074637	A1	6/2002	McFarland	
2002/0175421	A1	11/2002	Kimura	
2003/0047798	A1	3/2003	Halahan	
2003/0080437	A1	5/2003	Gonzalez et al.	
2003/0116859	A1	6/2003	Hashimoto	
2003/0199123	A1	10/2003	Siniaguine	
2004/0087057	A1 *	5/2004	Wang et al.	438/106

FOREIGN PATENT DOCUMENTS

EP	0 193 128	9/1986
JP	08-236579	9/1996
WO	WO 01/45476	6/2001

OTHER PUBLICATIONS

200mm Wafer Fab Strand Interconnect, Partner for High Performance Electronics.

Chapter 7: Wedge and Double Cantilever Beam Tests on a High Temperatue Melt Processable Polymide Adhesive, TPER-BPDA-PA, pp. 221-242.

Design Notes: Understanding Ball Grid Array Packages Electronics by Design, www.electronicsbydesign.com.au, issue 1997.10, pp. 1-4.

Flip Chip Bonding in Practice Issue No. 7, Sep. 2001, The Micro Circuit Engineering Newsletter.

Gektin, Vadim; Bar-Cohen, Avram; Witzman, Sorin "Coffin-Mason Based Fatigue Analysis of Underfilled DCAs," 1998 IEEE Transactions on Components, Packaging, and Manufacturing Technology, Part A, vol. 21, No. 4, Dec. 1998, pp. 577-584.

Gilleo, Ken "Substrates for Flip Chips" "Flip Chips Technology" in Area Array Packaging Handbook—Manufacturing and Assembly; K Gillio, Editor; The McGraw-Hill Companies, Inc., New York, NY.

Guenin, Bruce M. "The Many Flavors of Ball Grid Array Packages" Electronics Cooling, Feb. 2002, pp. 1-7.

HPMX-5001: Demonstration Circuit Board: Application Brief 102 Hewlett Packard, pp. 1-10.

Introduction to Printed Wiring Boards Netpack Education Pool, p. 1-18.

Jasper, Jorg "Gold or Solder Chip Bumping, the choice is application dependent" Chip Interconnection, EM Marin, pp. 1-4.

Jordan, Jerry "Gold Stud Bump In Flip-Chip Applicatins," 2002 Palomar Technologies, Inc.

Lu, H. and Bailey, C. "Predicting Optimal Process Conditions for Flip-Chip Assembly Using Copper Column Bumped Dies" School of Computing and Mathematical Sciences, 2002 IEEE, 2002 Electronics Packaging Technology Conference, pp. 338-343.

Maiwald, Werner "soldering SMD's Without Solder Paste" http://www.midwestpcb.com/sales/Kehoe/maiwald.htm.

Moon, K.W.; Boettinger, W.J.; Kattner, U.R.; Biancaniello, F.S.; Handwerker, C.A. "The Ternary Eutectic of Sn-Ag-Cu Colder Alloys" Metallury Division, Materials Science and Engineering Laboratory NIST Gaithersburg, MD 20899 USA.

Painaik, Mandar; and Hurley, Jim "Process Recommendations for Assemby of Flip Chips Using No-Flow Underfill" Semiconductor Products, Technical Bulletin, www.cooksonsemi.com.

Pang, John H.L.; Chong, D.Y.R.; Low T.H. "Thermal Cycling Analysis of Flip-Chip Solder Joint Reliability" IEEE Transactions on Components and Packaging Technologies, vol. 24, No. 4, Dec. 2001, pp. 705-712.

Perfecto, Eric; Lee, Kang-Wook; Hamel, Harvey; Wassick, Thomas; Cline, Christopher; Oonk, Matthew; Feger, Claudius; McHerron, Dale, "Evaluation of Cu Capping Alternatives for Polymide-Cu MCM-D" IEEE, 2001 Electronic Components and Technology Conference.

Productions Qualification Report: Select Qual B: Strand Substrate on MCM MQFP Qual Amkor Technology, Date Released: Jun. 14, 2002.

Solving Soldering Hierarchy Problems by Metallurgy and Design IBM Technical Disclosure Bulletin, IBM Corp. New York, US, vol. 33, No. 8, Jan. 1991, pp. 298-299, XP000106967, ISSN: 0018-8689.

Sperling, Ed; Electronics News, Sep. 17, 2003.

Staychip; 2078E No-Flow Fluxing Underfill; For Solding Sn/Pb eutectic solder bumps to common pad metallizations Preliminary Technical Bulletin Semiconductor Products, Technical Bulletin; Cookson Electronics.

Strand is Closing the Enterprise Strand Interconnect AB, Viggengatan5, SE-602 09 Norrkoping Sweden, www.strandinter.se.

Technical Data Sheet: No-Clean Pin-Probe Testable Solder Paste: NC253 www.aimsolder.com.

Tran, S.K.; Questad, D.L.; Sammakia, B.G. "Adhesion Issues in Flip-Chip on Organic Modules," 1998 InterSociety Conference on Thermal Phenomena, pp. 263-268.

U.S. Appl. No. 10/739,707, entitled "Packaging Substrates For Integrated Circuits and Soldering Methods," filed on Dec. 17, 2003.

U.S. Appl. No. 10/798,540, entitled "Attachment of Integrated Circuit Structures and Other Substrates to Substrates with Vias," filed on Mar. 10, 2004.

Wang, C.H.; Holmes, A.S.; Gao, S. "Laser-Assisted Bump Transfer for Flip Chip Assembly," 2000 IEEE Int'l Symp on Electronic Materials & Packaging, pp. 86-90.

Wang, Tie; Tung, Francisca; Foo, Louis; and Dutta, Vivek "Studies on A Novel Flip-Chip Interconnect Structure—Pillar Bump" Advanpack Solutions Pte Ltd, 2001 IEEE, 2001 Electronic Components and Technolgoy Conference.

www.flipchips.com/tutorial27.html "Flipchips: Tutorial 27, Shaping Gold Stud Bumps" pp. 1-8.

Zama, Satoru; Baldwin, Daniel F; Hikami, Toshiya; Murata, Hideaki "Flip Chip Interconnect Systems Using Wire Stud Bumps and Lead Free Solder," 2000 IEEE Electronic Components and Technology Conference, pp. 1111-1117.

* cited by examiner

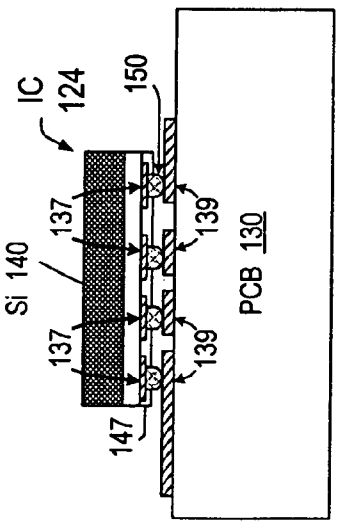

FIG. 1
PRIOR ART

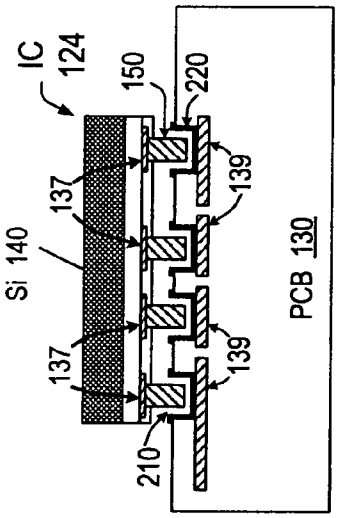

FIG. 2

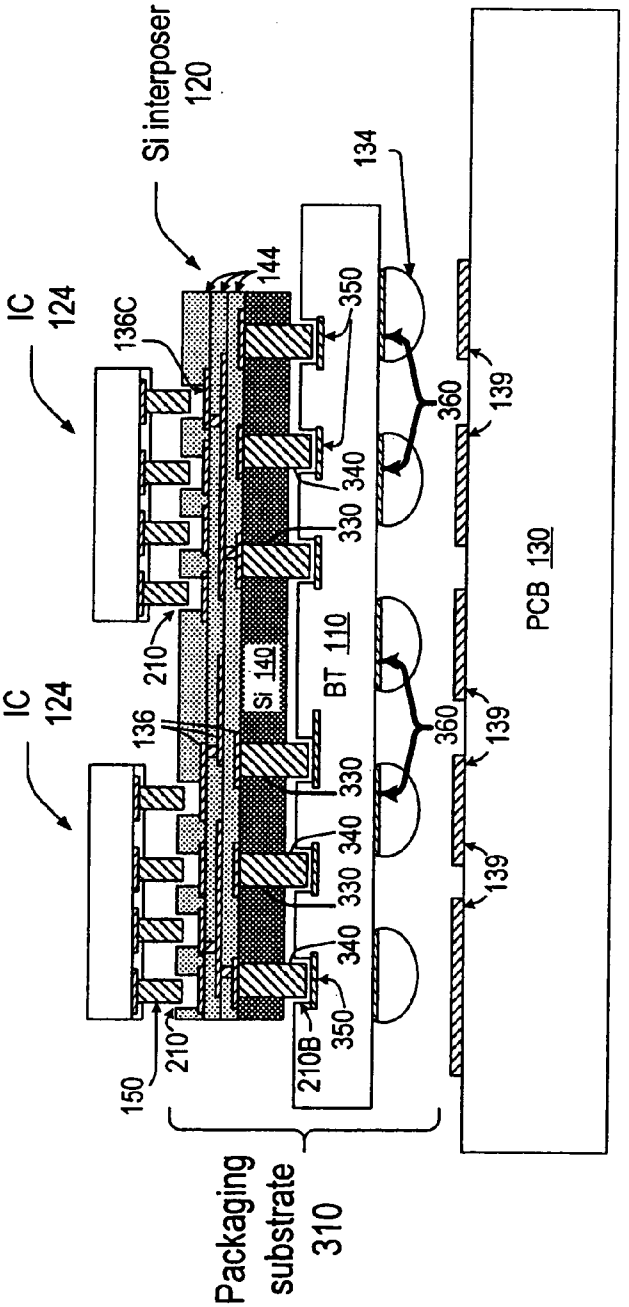

FIG. 3

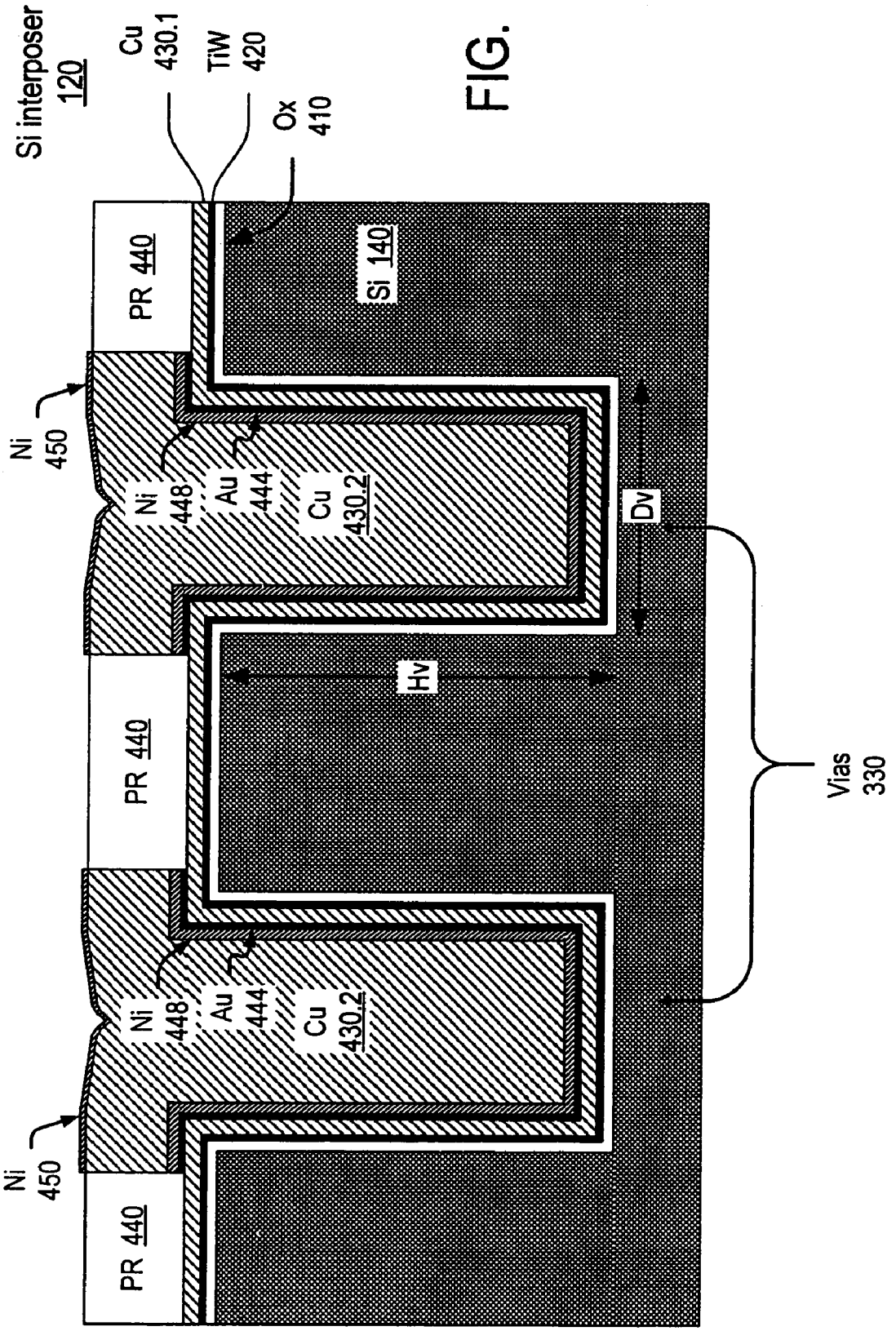
Si interposer
120
Cu
430.1
TiW
420
Ox
410
PR 440
Si 140
Ni
450
Ni
448
Au
444
Cu
430.2
Dv
Hv
PR 440
Vias
330
Ni
448
Au
444
Cu
430.2
Ni
450
PR 440

FIG. 4

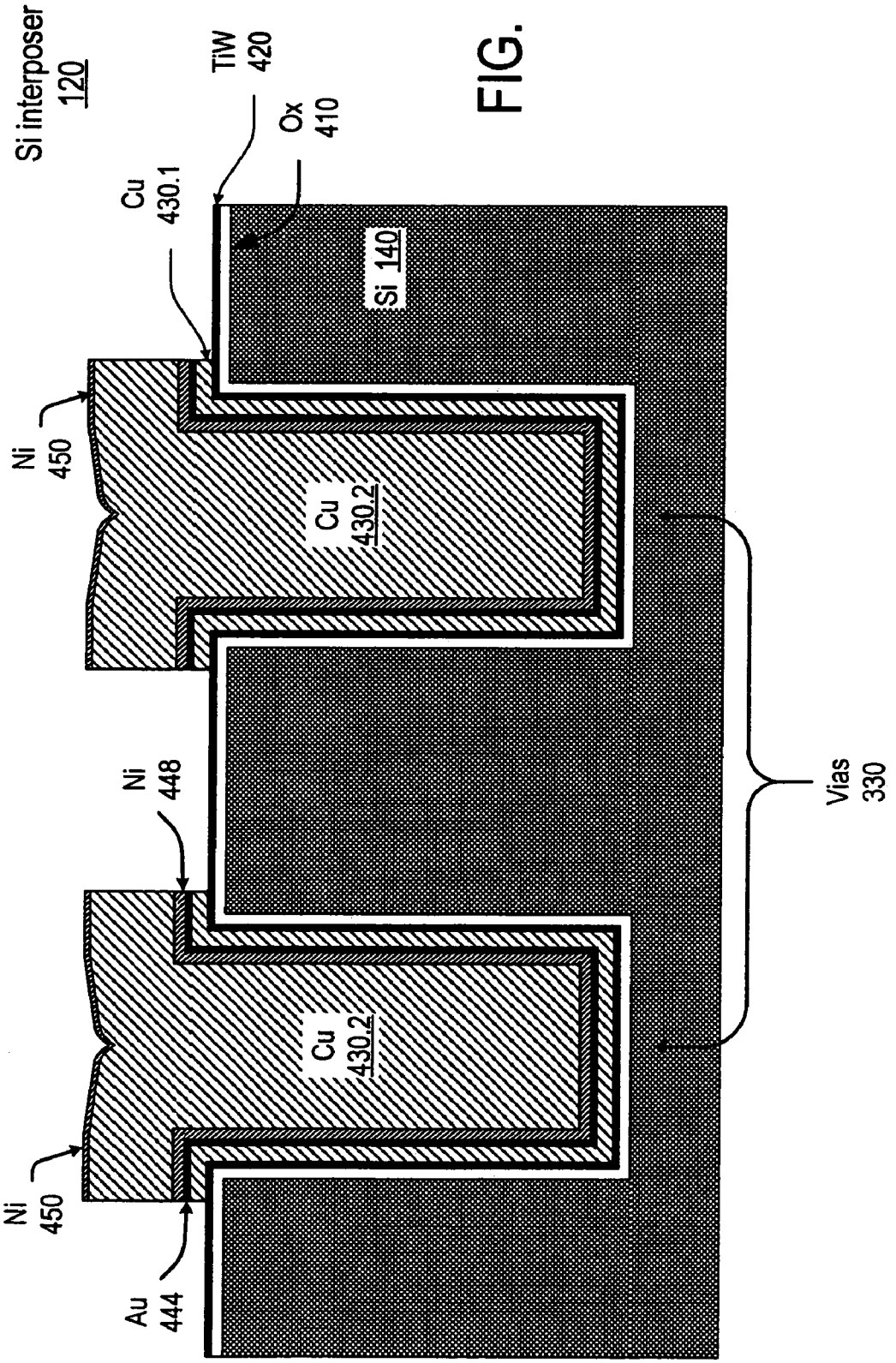
Si interposer
120
Cu
430.1
TiW
420
Ox
410
Si 140
Ni
450
Cu
430.2
Ni
448
Cu
430.2
Ni
450
Au
444
Vias
330

FIG. 5

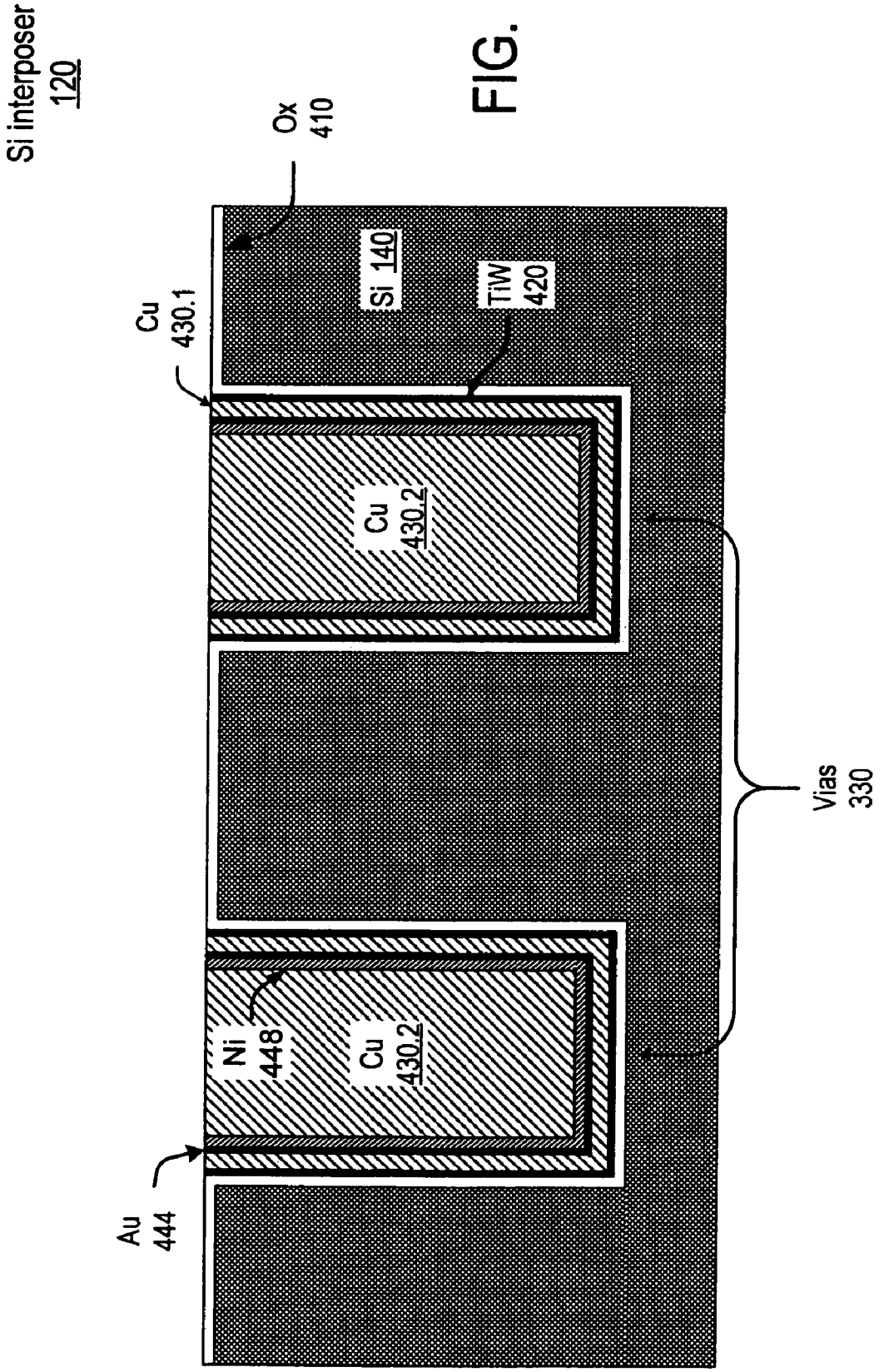
Si interposer
120
Ox
410
Cu
430.1
Si 140
TiW
420
Cu
430.2
Vias
330
Ni
448
Cu
430.2
Au
444

FIG. 6

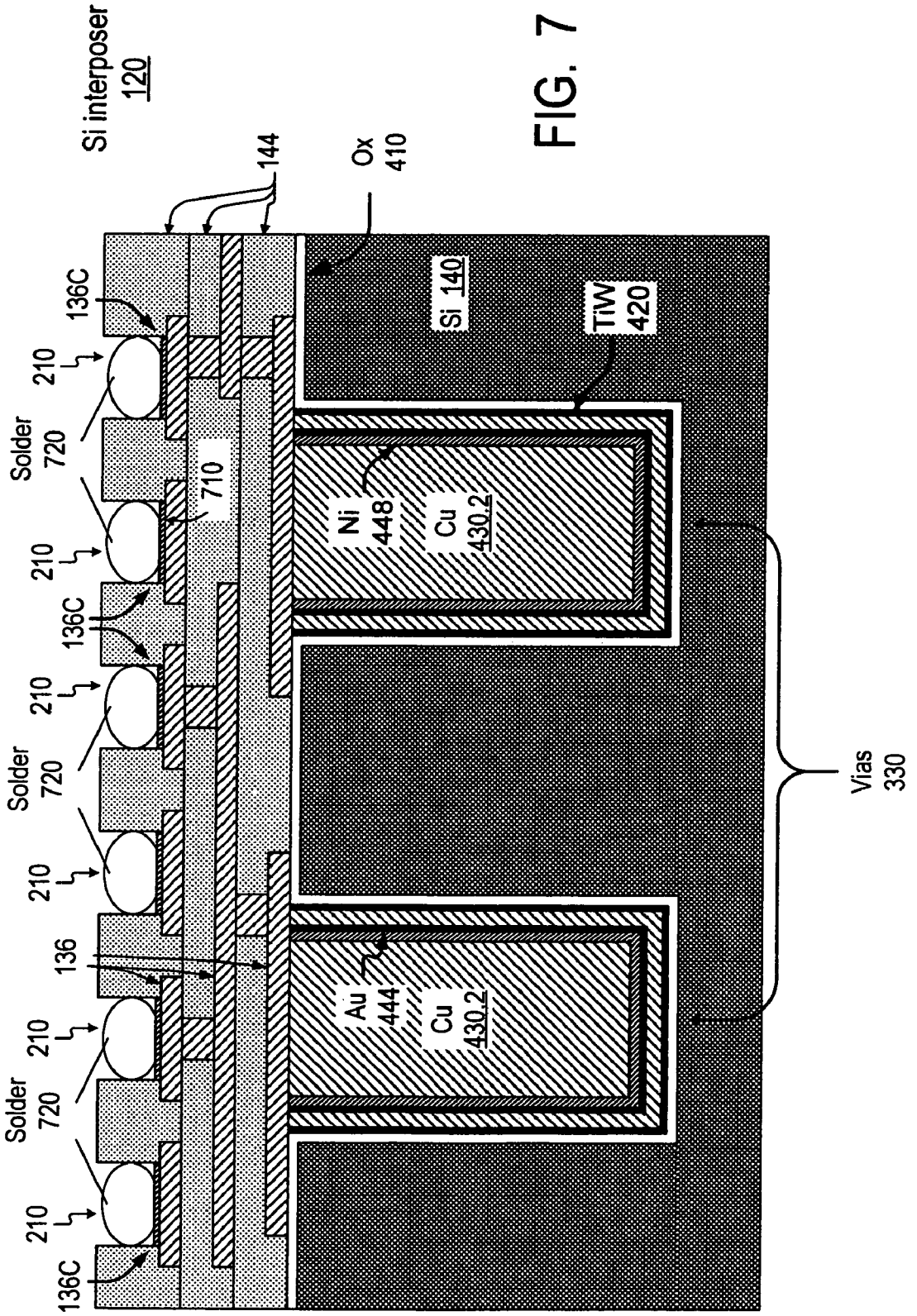
Si interposer
120
144
Ox
410
136C
210
Solder
720
710
Si 140
TiW
420
Ni
448
Cu
430.2
136
Au
444
Vias
330

FIG. 7

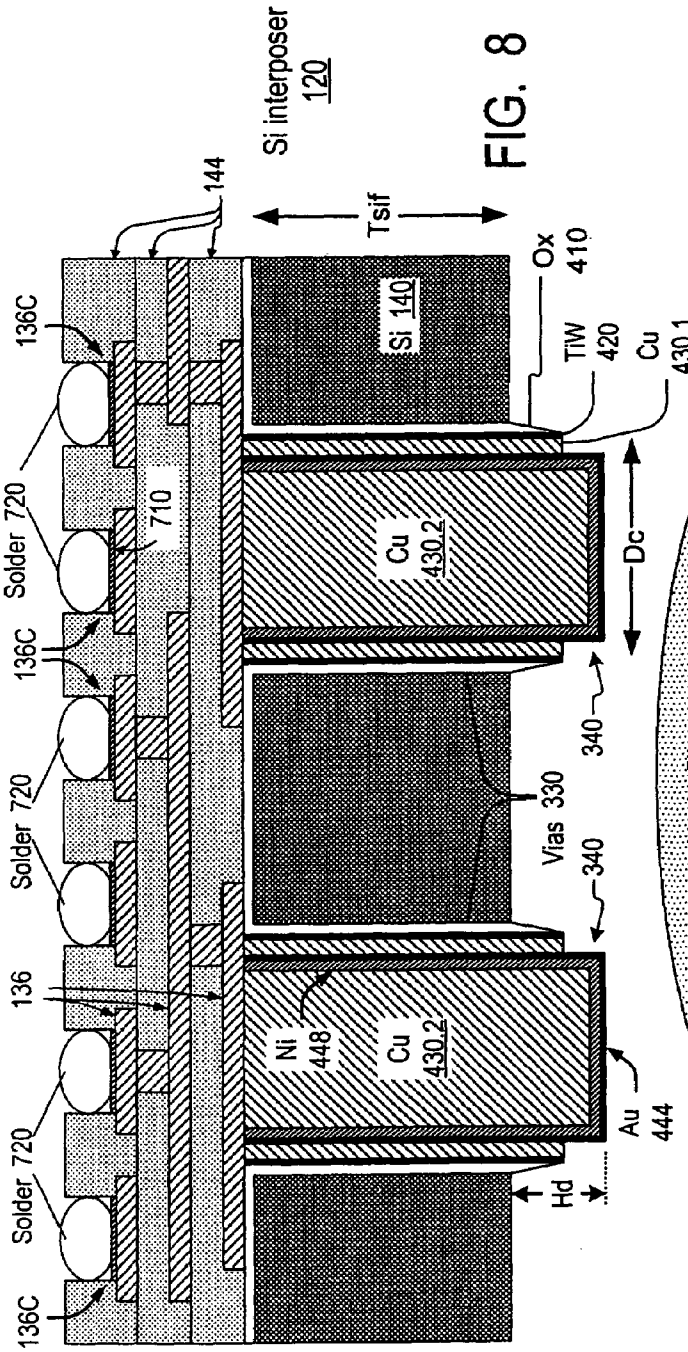
Si interposer
120
144
Tsif
Si 140
Ox
410
TiW
420
Cu
430.1
136C
Solder 720
710
Cu
430.2
Dc
136C
Solder 720
340
Vias 330
340
136
Ni
448
Cu
430.2
Au
444
Solder 720
Hd
136C

FIG. 8

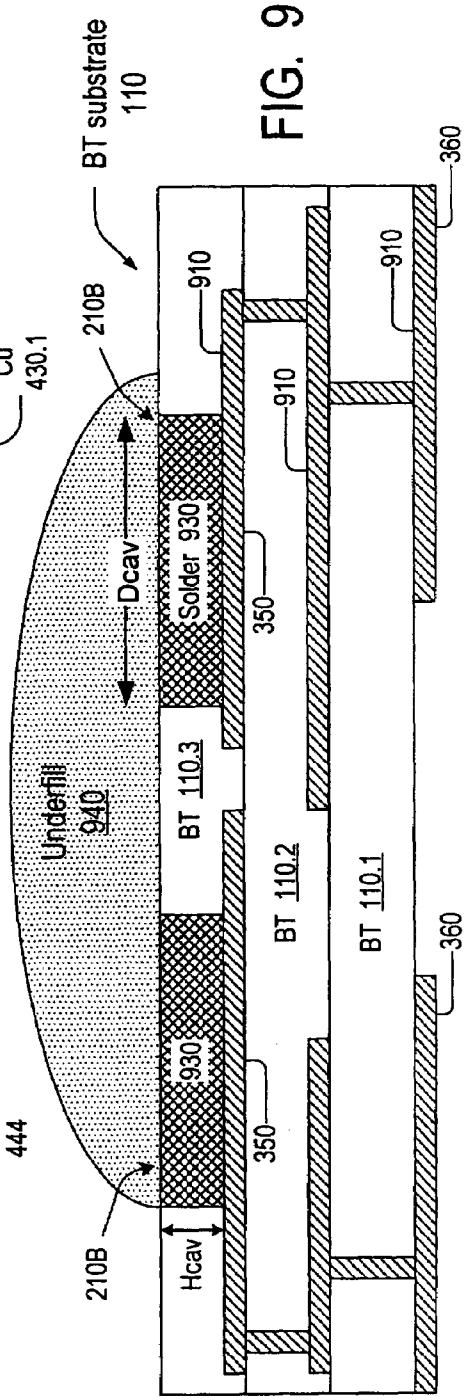
BT substrate
110
360
910
910
210B
910
Dcav
Solder 930
350
Underfill
940
BT 110.3
BT 110.2
BT 110.1
360
930
350
210B
Hcav

FIG. 9

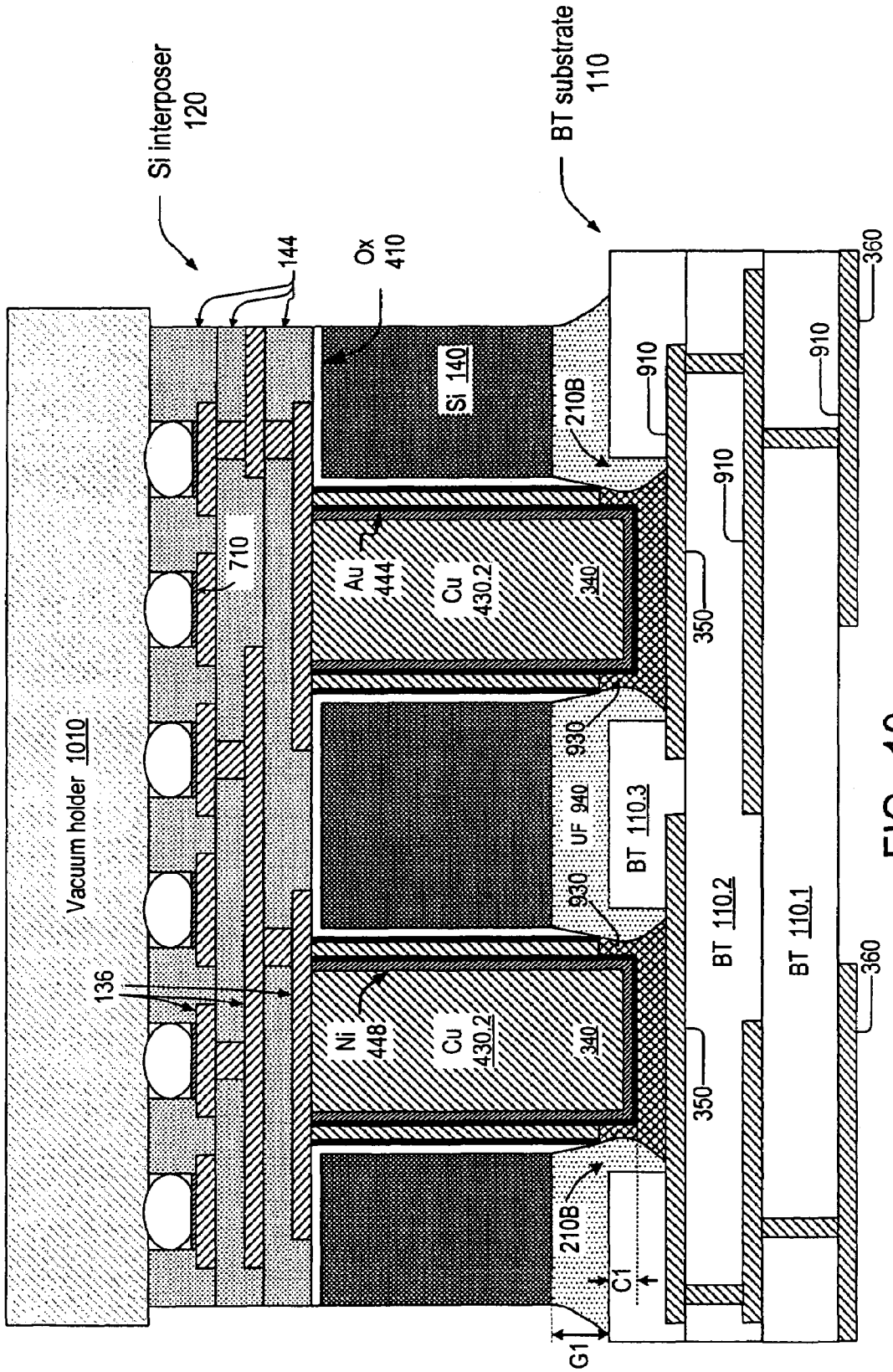
Si interposer
120
BT substrate
110
144
Ox
410
Si 140
210B
910
910
910
360
360
710
Au
444
Cu
430.2
340
350
350
930
930
UF 940
BT 110.3
BT 110.2
BT 110.1
Vacuum holder 1010
136
Ni
448
Cu
430.2
340
210B
C1
G1

FIG. 10

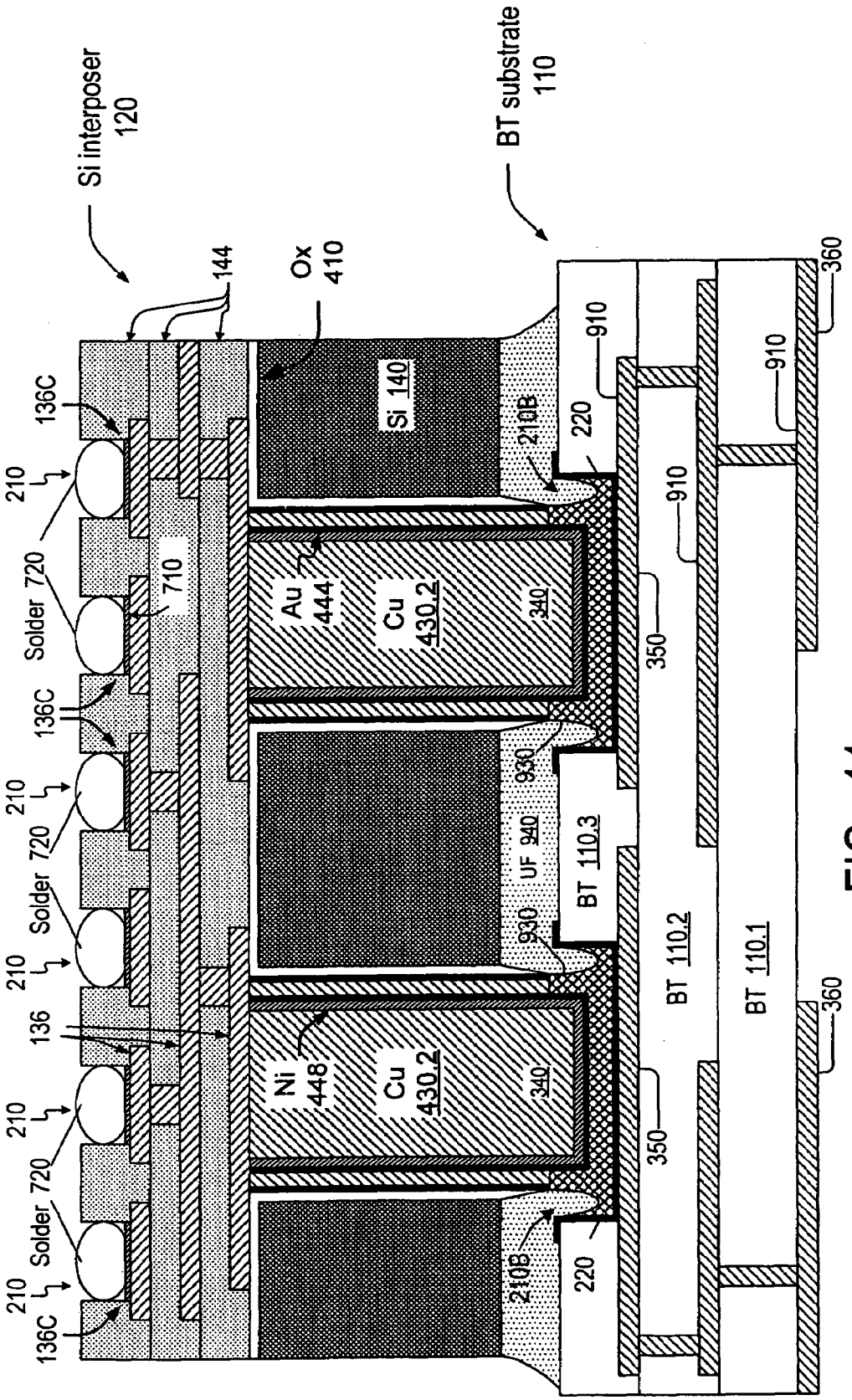
Si interposer
120
BT substrate
110
144
Ox
410
Si 140
136C
210
Solder 720
710
Au
444
Cu
430.2
340
210B
220
910
350
930
UF 940
BT 110.3
BT 110.2
BT 110.1
360
136
Ni
448

FIG. 11

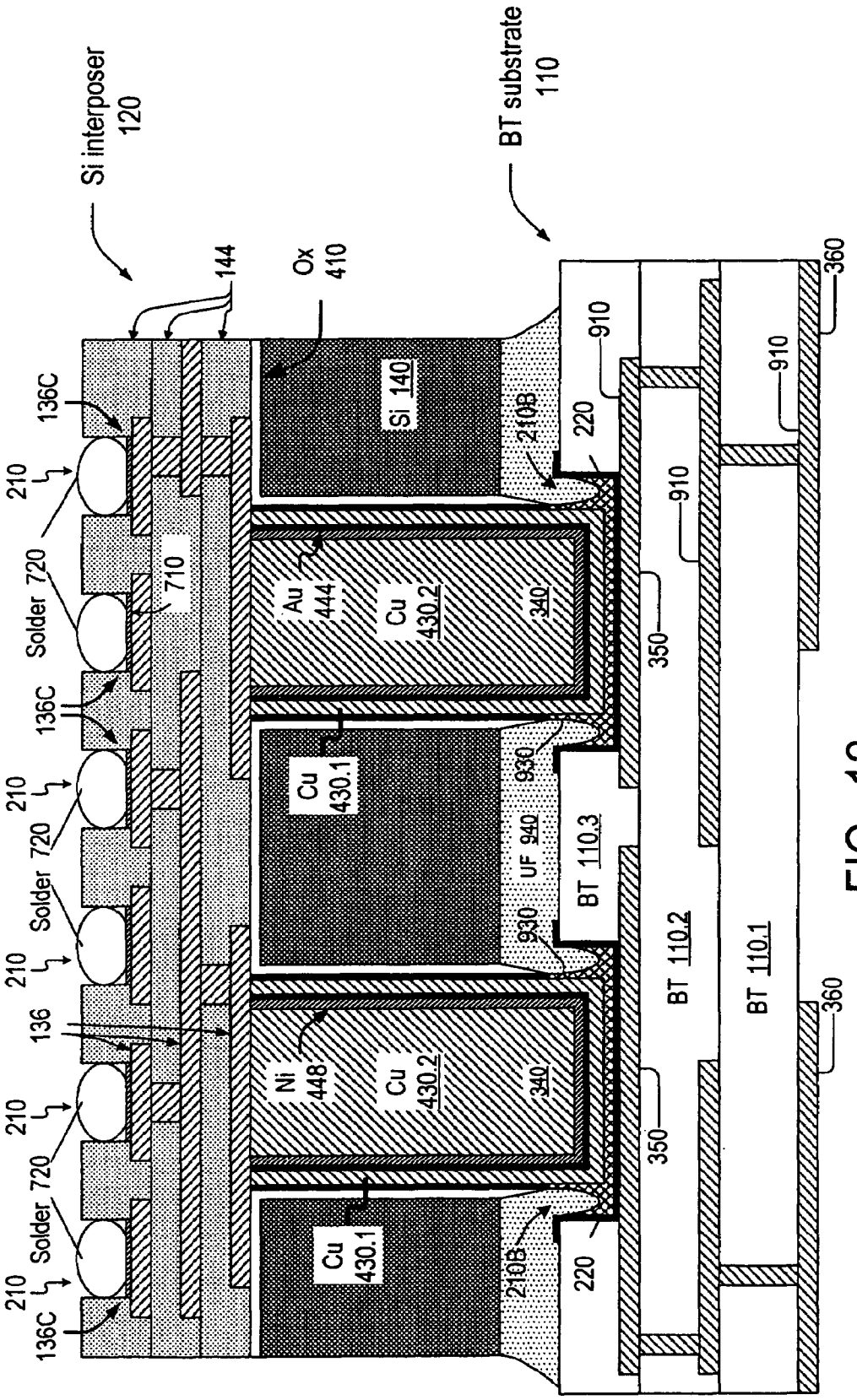
Si interposer
120
BT substrate
110
144
Ox
410
136C
210
Solder 720
710
Si 140
210B
220
910
360
Au
444
Cu
430.2
340
350
Cu
430.1
930
UF 940
BT 110.3
BT 110.2
BT 110.1
136
Ni
448

FIG. 12

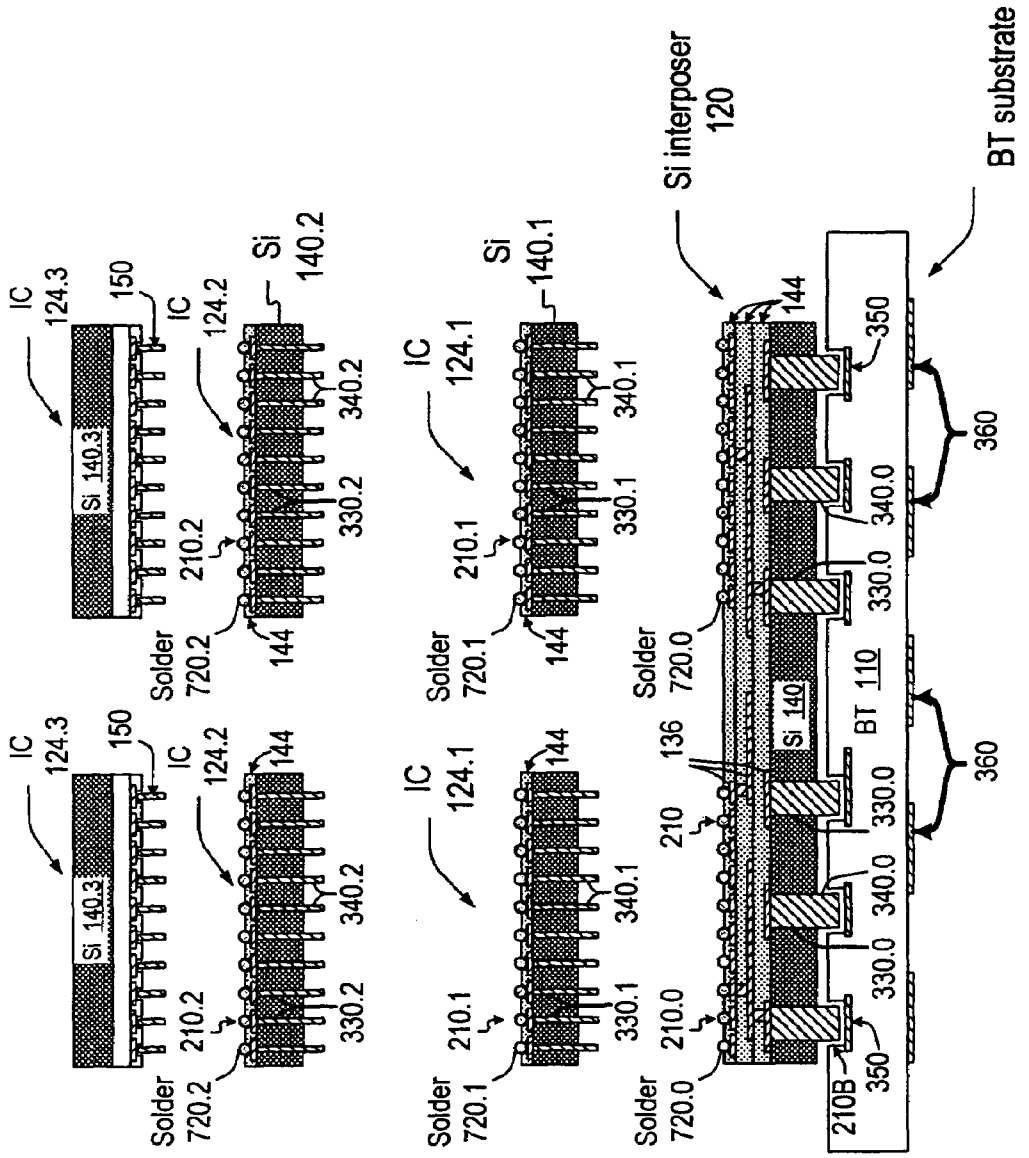
IC
124.3
150
Si 140.3
IC
124.2
Si
140.2
340.2
330.2
210.2
Solder
720.2
144
IC
124.1
Si
140.1
340.1
330.1
210.1
Solder
720.1
144
Si interposer
120
BT substrate
110
144
350
360
340.0
330.0
Solder
720.0
136
Si 140
BT 110
210
210.0
210B

FIG. 13

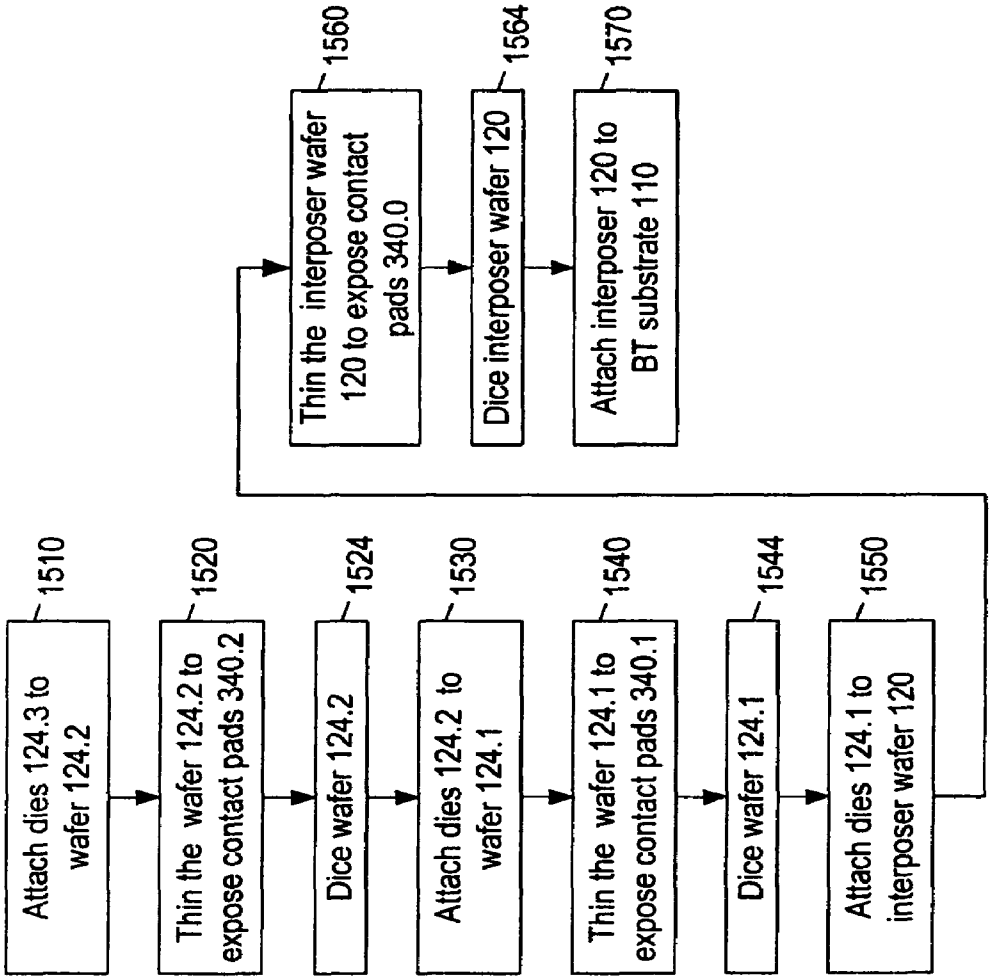
1510
Attach dies 124.3 to wafer 124.2
1520
Thin the wafer 124.2 to expose contact pads 340.2
1524
Dice wafer 124.2
1530
Attach dies 124.2 to wafer 124.1
1540
Thin the wafer 124.1 to expose contact pads 340.1
1544
Dice wafer 124.1
1550
Attach dies 124.1 to interposer wafer 120
1560
Thin the interposer wafer 120 to expose contact pads 340.0
1564
Dice interposer wafer 120
1570
Attach interposer 120 to BT substrate 110

FIG. 15

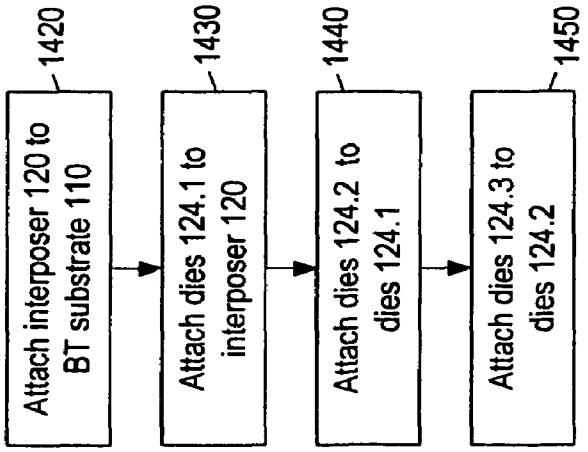
1420
Attach interposer 120 to BT substrate 110
1430
Attach dies 124.1 to interposer 120
1440
Attach dies 124.2 to dies 124.1
1450
Attach dies 124.3 to dies 124.2

FIG. 14

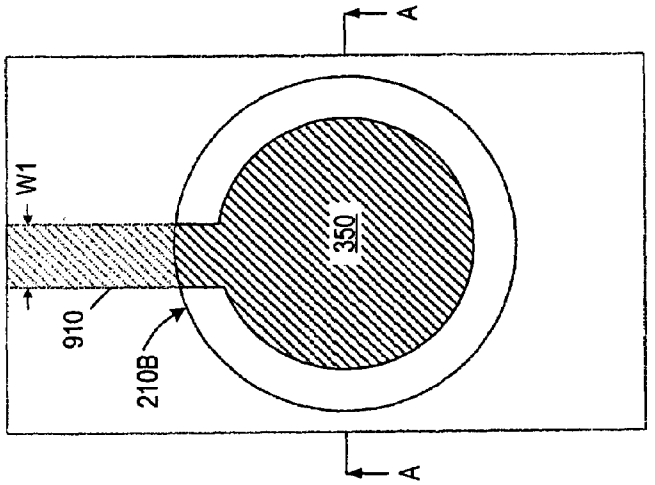

FIG. 16B

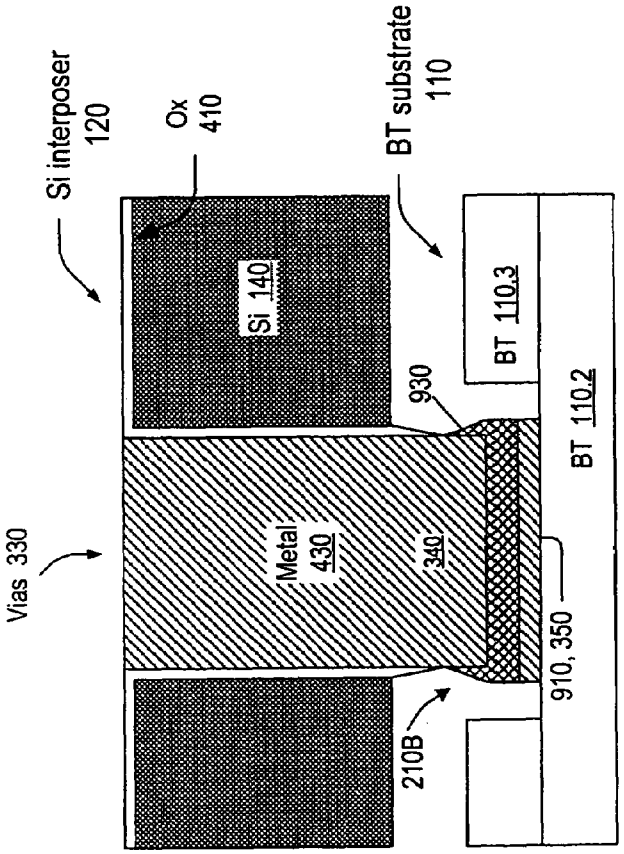

FIG. 16A

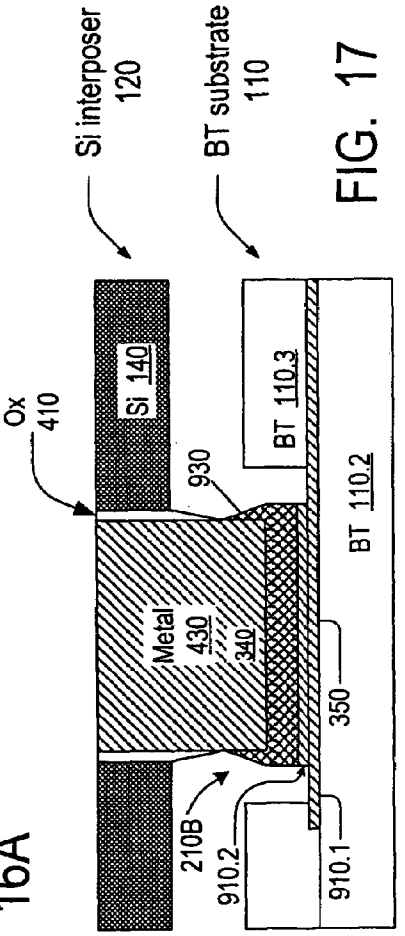

FIG. 17

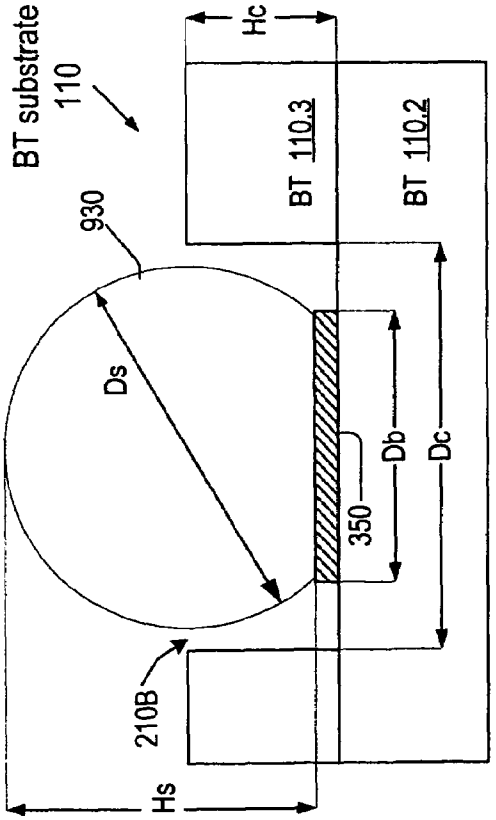
BT substrate
110
930
Ds
Hc
BT 110.3
BT 110.2
Db
Dc
350
210B
Hs

FIG. 18

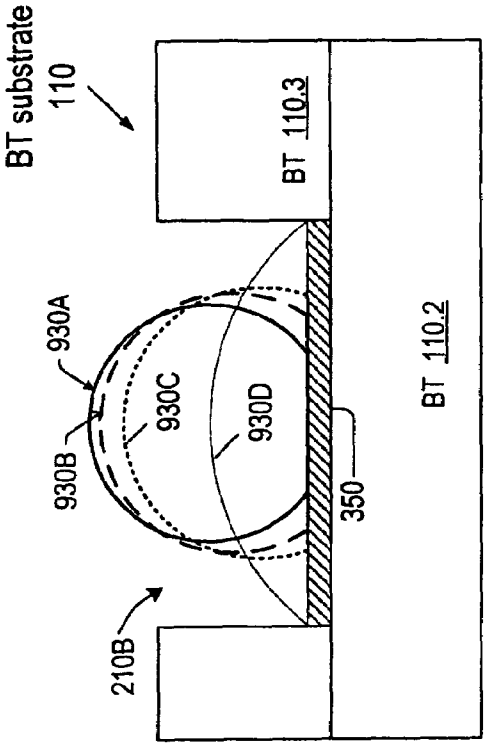
BT substrate
110
BT 110.3
930A
930B
930C
930D
350
BT 110.2
210B

FIG. 19

ATTACHMENT OF INTEGRATED CIRCUIT STRUCTURES AND OTHER SUBSTRATES TO SUBSTRATES WITH VIAS

CROSS REFERENCE TO RELATED APPLICATIONS

The present application is a division of U.S. patent application Ser. No. 10/798,540 filed on Mar. 10, 2004 by S. Savastiouk et al., entitled "ATTACHMENT OF INTEGRATED CIRCUIT STRUCTURES AND OTHER SUBSTRATES TO SUBSTRATES WITH VIAS", incorporated herein by reference, which is a continuation-in-part of U.S. patent application Ser. No. 10/739,788 filed on Dec. 17, 2003 now U.S. Pat. No. 7,049,170 by S. Savastiouk et al., entitled "INTEGRATED CIRCUITS AND PACKAGING SUBSTRATES WITH CAVITIES, AND ATTACHMENT METHODS INCLUDING INSERTION OF PROTRUDING CONTACT PADS INTO CAVITIES", incorporated herein by reference.

BACKGROUND OF THE INVENTION

The present invention relates to attachment of integrated circuits to other substrates.

Integrated circuit dies ("chips") can be attached to a lead frame and then packaged in a ceramic or plastic carrier. The leads of the lead frame can then be soldered to a printed circuit board (PCB). Alternatively, the chip can be soldered directly to the PCB ("flip chip" packaging). The flip chip packaging reduces the package size and shortens the electrical connections between the die and the PCB. FIG. **1** illustrates a chip **124** flip-chip attached to a PCB **130**. The chip is attached face down, with its contact pads **137** connected to contact pads **139** of the PCB.

In the manufacturing process, contact pad metal layer **137** (the layer that provides the contact pads) is deposited and patterned over the chip's silicon substrate **140**. A passivation dielectric layer **147** is formed on layer **137**. Openings are formed in dielectric **147** to expose the contact pads **137**. As a result, contact pads **137** are recessed into the chip's surface. To connect the contact pads **137** to the PCB, protruding metal bumps **150** are formed on the contact pads. Bumps **150** are bonded to PCB contact pads **139** with solder, an adhesive, or by thermal or thermosonic compression.

Bumps **150** can themselves be made of solder. The chip is placed on the PCB with bumps **150** on pads **139**, and solder **150** is reflowed to form solder joints. This attachment is mechanically strong and reliable in the presence of thermal stresses, but the solder bumps are difficult to scale down as contact pads **137** become smaller and the pitch between the pads **137** is reduced. As the solder bump sizes decrease to accommodate the smaller contact pads and pitches, the solder joints become mechanically and thermally weaker. Also, the solder ball (solder bump) size defines the standoff distance between the chip **124** and PCB **130**. If the standoff is too small, there will be increased fatigue stresses on the solder joints during thermal cycling. In addition, there is a greater possibility of undesirable residues remaining between the chip **124** and the PCB and causing some degradation.

Bumps **150** can also be made without solder, e.g. from copper (Cu) or gold (Au), to obtain better scalability. See S. Zama et al., "Flip Chip Interconnect Systems Using Wire Stud Bumps and Lead Free Solder", 2000 *Electronic Components and Technology Conference*, pages 1111–1117 (available from IEEE); C. H. Wang et al., "Laser-Assisted Bump Transfer for Flip Chip Assembly", 2000 *International Symposium on Electronic Materials & Packaging*, pages 86–90 (available from IEEE), both incorporated herein by reference. A combination of solder and copper has also been used. More particularly, a "copper pillar" can be plated on contact pads **137**, then solder is plated on the copper pillar. See H. Lu et al., "Predicting Optimal Process Conditions for Flip-Chip Assembly Using Copper Column Bumped Dies", 2002 *Electronics Packaging Technology Conference*, pages 338–343 (available from IEEE); Tie Wang et al., "Studies on a Novel Flip-Chip Interconnect Structure—Pillar Bump", 2001 *Electronic Components and Technology Conference* (available from IEEE), both incorporated herein by reference.

Improved integrated circuit attachment techniques are desirable.

SUMMARY

This section summarizes some features of the invention. Other features are described in the subsequent sections. The invention is defined by the appended claims which are incorporated into this section by reference.

In some embodiments of the present invention, cavities are formed in the PCB, and the integrated circuit bumps are inserted into the cavities. For example, in FIG. **2**, cavities **210** are formed in the top surface of PCB **130**. At least a portion of each contact PCB pad **139** is located in the corresponding cavity. Bumps **150** are inserted into the cavities and attached to contact pads **139**. Bumps **150** may be solderless bumps, e.g. they may be copper columns, gold wires, or some other kind of bumps, known or to be invented. Bumps **150** may also include solder. Bumps **150** can be attached to PCB contact pads **139** with solder, a conductive or anisotropic adhesive, by thermal or thermosonic compression, or some other technique, known or to be invented. For example, in some embodiments, solder paste or an adhesive (not shown) are deposited in cavities **210**, then the die **124** is placed on the PCB with the bumps **150** inserted into the cavities.

In some embodiments, cavities **210** increase the mechanical strength of the structure. The structure becomes stronger against lateral forces (including lateral stresses caused by thermal expansion). Also, the amount of solder or adhesive can be increased by increasing the depth of cavities **210** without increasing the lateral size of the structure. Improved scalability is therefore provided.

In addition, if bumps **150** are attached with solder or a conductive or anisotropic adhesive, the size uniformity requirements for bumps **150** are relaxed. If the bumps are not uniform in size, the shorter bumps will still provide a reliable electrical connection to contacts **139** as long as there is a reliable electrical connection between the bumps and the solder or adhesive in cavities **210**.

In FIG. **2**, an optional conductive film **220** (e.g. metal) is formed on the bottom and sidewalls of each cavity **210**. Film **220** is believed to improve the strength and the electrical conductivity of the bond between bumps **150** and contact pads **139**. Film **220** is not necessary however.

Bumps **150** can be thought of as "contact pads", and the invention is applicable to any protruding contact pads and not necessarily the protruding pads formed by bumping a die. For example, protruding contact pads can be formed on a die by removing the die material to expose metal features, as described in U.S. Pat. No. 6,322,903 issued Nov. 27, 2001 to Siniaguine et al. and incorporated herein by reference.

In some embodiments, layer **220** is absent, and a cavity **210** exposes not only the contact pad **139** but also a surrounding dielectric region in substrate **130**. The solder (not shown) wets the contact pad **139** better than the surrounding region, so more solder gathers near the bump **150**, and the solder reaches up higher along the surface of bump **150**. This is believed to provide a stronger solder joint and better electrical conductivity at least in some embodiments. Alternatively, the contact pad **139** or layer **220** may include multiple conductive layers, with the top layer being more solder wettable than the bottom layers and the top layer covering only a portion of the bottom layers. The solder will preferentially wet the more solder wettable layer, gathering closer to bump **150** and reaching up higher.

The invention is not limited to the embodiments discussed in this section. For example, cavities **210** can be replaced by through vias (through holes) that pass through the PCB **130**. Contacts **139** can be metal layers on the sidewalls of the through vias. The integrated circuit structure **124** can be a wafer rather than a die. PCB **130** can be replaced with a ball grid array substrate (BGA) or some other packaging substrate, e.g. a silicon interposer. PCB **130** can also be replaced with another integrated circuit structure (a die or a wafer). Other features and advantages of the invention are described below. The invention is defined by the appended claims.

BRIEF DESCRIPTION OF THE DRAWINGS

FIG. **1** shows a vertical cross section of an integrated circuit attached to a PCB according to prior art.

FIGS. **2**, **3** show vertical cross sections of integrated circuits attached to substrates according to embodiments of the present invention.

FIGS. **4**–**8** show vertical cross sections of integrated circuits in the process of fabrication for attachment according to embodiments of the present invention.

FIG. **9** shows a vertical cross section of a BT substrate fabricated according to an embodiment of the present invention.

FIGS. **10**–**13** show vertical cross sections of integrated circuits attached to substrates according to embodiments of the present invention.

FIGS. **14**, **15** are flowcharts of an integrated circuit packaging processes according to embodiments of the present invention.

FIG. **16**A shows a vertical cross section of an interposer attached to a substrate according to some embodiments of the present invention.

FIG. **16**B is a top view of the structure of FIG. **16**A.

FIG. **17** shows a vertical cross section of an interposer attached to a substrate according to some embodiments of the present invention.

FIGS. **18**, **19** illustrate possible shapes of solder for the embodiments of FIGS. **16**A, **16**B, **17**.

DESCRIPTION OF SOME EMBODIMENTS

The embodiments described in this section illustrate but do not limit the invention. The invention is not limited to particular materials, process steps, or dimensions. The invention is defined by the appended claims.

FIG. **3** illustrates another integrated circuit packaging structure. Integrated circuit packaging substrate **310** is an intermediate substrate that provides an interconnection between dies **124** and PCB **130**. Substrate **310** includes two intermediate integrated circuit packaging substrates **110**, **120**. Substrate **120** is a silicon interposer attached to BT substrate **110**, and thus is itself a semiconductor integrated circuit. The attachment is made as described above in connection with FIG. **2**. More particularly, cavities **210**B (also called vias or openings herein) are formed in the top surface of BT substrate **110**. Protruding contact pads **340** of interposer **120** are inserted into the cavities.

Dies **124** are attached to interposer **120** as in FIG. **2**. More particularly, cavities **210** are formed in the top surface of the interposer, and the dies' bumps **150** are inserted into these cavities. BT substrate **110** is attached to PCB **130** in a conventional manner. More particularly, solder balls **134** are attached to contact pads **360** on the bottom surface of BT substrate **110**, and the solder balls are later reflowed to solder the contact pads **360** to PCB contact pads **139**. These features are not limiting. For example, in some embodiments, the cavities are used to attach the dies **124** to interposer **120** but the attachment of interposer **120** to BT substrate **110** is performed without cavities. In other embodiments, the cavities are used to attach the interposer **120** to BT substrate **110**, but the attachment of dies **124** to interposer **120** is performed without cavities. In other embodiments, the cavities are used to attach one but not both dies **124** to interposer **120**. Also, the cavities can be used to attach some but not all of the a single die's contact pads to the interposer, or some but not all of the interposer's contact pads **340** to BT substrate **110**.

Silicon interposer **120** includes metal layers **136** formed over silicon substrate **140**. Substrate **140** has substantially planar top and bottom surfaces, and is quite thin. In some embodiments, the planarity of substrate **140** is suitable for fine geometry photolithography (finer than possible with BT and FR4 substrates). The thickness of substrate **140** can be 100 μm or less (50 μm to 35 μm thickness values believed to be achievable, and smaller values may be possible). Layers **136** provide interconnect lines and may also provide power and ground planes, resistors, inductors, capacitor plates for decoupling capacitors and other capacitor types, and possibly other elements, known or to be invented. Layers **136** can be separated from each other, and from the substrate, by dielectric layers **144**. Layers **136** contact each other and the silicon substrate through openings in the dielectric layers. Layers **136** can also be formed directly on the silicon substrate if desired. Layers **136** provide contact pads **136**C at the top surface of the interposer. At least a portion of each contact pad **136**C is located in a corresponding cavity **210**.

These features are exemplary and not necessary. For example, silicon substrate **140** can be thicker than described above, and its top and bottom surfaces do not have to be planar.

In the embodiment of FIG. **3**, silicon substrate **140** includes metalized through-silicon vias **330** that pass between the top and bottom surfaces of substrate **140**. Conductive paths are provided from contact pads **136**C at the top of the interposer to contact pads **340** at the bottom of the interposer through the vias **330**. Contact pads **340** protrude out of vias **330**. Contact pads **340** are attached to contact pads **350** at the top surface of BT substrate **110**.

Interconnects (not shown) in BT substrate **110** connect the contact pads **350** to contact pads **360** at the bottom surface of substrate **110**. Solder balls **134** are formed on pads **360** by conventional techniques for attachment to PCB **130**.

The size and spacing (pitch) of contact pads **136**C on interposer **120** matches the size and the pitch of the contact pads on dies **124**. If dies **124** are silicon integrated circuits, their CTE (coefficient of thermal expansion) matches the CTE of the interposer, so the pitch of contact pads **136**C can

be small because the low thermal stresses at the interface between the dies and the interposer make it unnecessary to use large bumps **150** as would be desirable for a strong mechanical connection. The contact pads **340** on the bottom of the interposer match the top contact pads **350** of BT substrate **110**. For some fabrication technologies, the minimum dimensions are as shown in the following Table 1. The dimensions can typically be reduced if more expensive technologies are used.

TABLE 1

Contacts	Minimum pitch	Solder ball diameter	Solder ball height
Contact pads 136C	125 μm	75 μm	60 μm
Contact pads 340, 350	254 μm	150 μm (solder balls, not shown, joining pads 340 to 350)	120 μm
Contact pads 360	1.27 mm	0.75 mm (solder balls 134)	0.60 mm

Silicon interposer **120** can be manufactured using conventional techniques. See e.g. the aforementioned U.S. Pat. No. 6,322,903. Other techniques are described in U.S. patent application Ser. No. 10/410,929 filed on Apr. 9, 2003 by P. Halahan et al., entitled "Electroplating and electroless plating of conductive materials into openings, and structures obtained thereby", incorporated herein by reference. Still other techniques can possibly be used, whether known or to be invented. An exemplary manufacturing process is as follows. Vias **330** (FIG. **4**) are etched in the top surface of silicon substrate **140** (e.g. monocrystalline silicon) by DRIE (deep reactive ion etching) to an exemplary depth Hv=150 μm. (The dimensions, etching processes, and other particulars are exemplary and not limiting.) The via diameter Dv is 25 μm to 100 μm. The via diameter DV is one of the parameters defining the diameter of contact pads **340** (FIG. **3**), and DV is chosen large enough to provide the necessary mechanical strength for the protruding contact pads. Exemplary dimensions below will be given for Dv=65 μm. Silicon dioxide layer **410** is thermally grown on the wafer to a thickness of about 1 μm. A larger thickness can also be used to reduce the capacitance between substrate **140** and the metal features that will be fabricated in vias **330**. Barrier layer **420** of titanium-tungsten (TiW) is sputtered on oxide **410** to a thickness of 0.2 μm. A seed copper (Cu) layer **430.1** is sputtered on the wafer to a thickness sufficient to ensure a continuous copper coverage in the vias. Thicknesses of 0.5 μm to 2 μm are believed to be adequate, depending on the sputter technology. A dry photoresist film **440** is deposited on the wafer and patterned to expose the vias **330**.

Optionally, gold (Au) layer **444** and nickel (Ni) layer **448** are electroplated, in that order, to an exemplary thickness of 0.2 μm and 1.0 μm respectively.

Copper **430.2** is electroplated on nickel **448** to fill the vias **330** and possibly protrude out of the vias. In the electroplating of layers **444**, **448**, **430.2**, the cathode terminal (not shown) of the power source is placed at the periphery of wafer **140** in physical contact with seed layer **430.1**.

Optionally, nickel (Ni) layer **450** is electroplated on the top surface of copper layer **430.2** to an exemplary thickness of 0.5 μm.

Resist **440** is removed (FIG. **5**). A wet copper etch removes the exposed portions of seed copper **430.1**, with nickel **450** acting as a mask. Nickel **450** protects copper **430.2** in vias **330**. Copper **430.2**, **430.1** can be etched laterally during the wet etch, but the lateral etch does not remove the copper over the vias **330** because the copper extends laterally beyond the via edges. In those embodiments in which the nickel **450** is omitted, the copper etch may reduce the thickness of copper **430.2**, but this is acceptable if the copper protrusions above the vias are sufficiently thick. In either case, it is desirable for the top surface of copper **430.2** to be at or above the top surface of oxide **410** after the copper etch.

Then a CMP step (chemical mechanical polishing) is performed to remove copper **430.2**, nickel **448**, gold **444**, and TiW **420** off the top surface of substrate **140** (FIG. **6**). The CMP stops on oxide **410**. The structure has a planar top surface.

In an alternative embodiment, the wet etch of copper **430.1** is omitted, and copper **430.1** is removed by the CMP step. The separate wet etch of copper **430.1** may be desirable however because it may shorten the more expensive CMP step, thus reducing the total manufacturing cost.

Oxide **410** can be patterned if desired. Metal layers **136** (FIG. **7**) and dielectric layers **144** are deposited on the interposer wafer and patterned to provide interconnects and, possibly, other elements as described above. In some embodiments, metal **136** is copper and dielectric **144** is polyimide, but other materials can also be used. Some or all of dielectric layers **144** can be silicon dioxide, photosensitive benzocyclobutene (BCB), polybenzoxazole (PBO), or other materials. For a capacitor, a high dielectric constant material (such as Ta_2O_5) can be used. Aluminum, conductive polysilicon, and other materials can be used as layers **136**. Cavities **210** are formed in the top dielectric layer **144** to expose the contact pads **136**C provided by the top metal layer **136**. Solder wettable materials **710** (e.g. Ni and/or Au) can be plated on contact pads **136**C if desired.

Solder balls **720** are formed on contact pads **136**C, by any suitable technique. For example, solder paste can be deposited to cover the interposer wafer **120**, and then wiped off by a squeegee blade to force the solder into cavities **210** and remove it from the top surface of the top layer **144**. In some embodiments, interconnects **136** are made of copper, and contact pads **136**C are plated with a layer **710** of nickel or gold. Layer **710** does not dissolve in solder **720** and provides a barrier for the copper diffusion from interconnects **136**, so the melting temperature of solder **720** does not change when the solder is reflowed.

In some embodiments, the solder is not placed at this stage to avoid solder melting at high temperatures present in plasma wafer thinning processes described below in connection with FIG. **8**. Whether or not the solder is placed at this stage or after the wafer thinning, the top dielectric layer **144** is sufficiently thick to accommodate the solder volume needed for a reliable bond to dies **124** (FIG. **1**). In some embodiments, the top dielectric **144** is 50 μm thick. Cavities **210** are about 50 μm deep and have a diameter of about 75 μm.

Then the interposer wafer is thinned from the bottom to expose the gold **444**. See FIG. **8**. The exposed metal provides the contact pads **340** (FIG. **3**) that will be soldered to BT substrate **110**. The wafer thinning can be performed with any of the techniques described in the aforementioned U.S. Pat. No. 6,322,903 and U.S. patent application Ser. No. 10/410,929. See also U.S. Pat. No. 6,498,381 issued on Dec. 24, 2002 to Halahan et al. and incorporated herein by reference. In one embodiment, the wafer thinning includes a CF_4 plasma etch at atmospheric pressure. The wafer is held from the top by a vortex wafer holder (not shown) that does not touch the wafer except possibly at the wafer periphery. The holder emits gas vortices that create vacuum between the holder and the wafer but do not allow the wafer to touch

the top surface of the holder. The plasma etch exposes the oxide **410** and then etches the silicon **140**, oxide **410** and TiW **420** selectively to copper **430.1**. (Copper **430.1** is etched later as explained below.) The plasma etch etches silicon **140** faster than oxide **410**, so the oxide protrudes out of the silicon on the bottom surface of the wafer after the etch. In one embodiment, the final thickness "Tsif" (marked in FIG. **8**) of silicon substrate **140** is 100 μm, and it can be smaller (e.g. 35 μm). Oxide **410** and TiW **420** form 5 μm protrusions around the copper **430.1** below the silicon surface. If the solder **720** melting temperature is low, the solder can melt in this process and be blown away by the wafer holder's gas vortices. Therefore, in some embodiments the solder **720** is placed on the wafer after the wafer thinning and, possibly, after the wafer attachment to BT substrate **110**.

The plasma etch forms copper oxide (not shown) on the exposed portions of copper **430.1**. The copper oxide and the copper **430.1** are etched by a wet etch to expose gold **444**. The gold provides a solderable oxide-free surface. Nickel **448** will prevent copper diffusion from layer **430.2** into the solder. The copper diffusion may be undesirable because it increases the solder melting temperature. In other embodiments, the copper diffusion is desirable to achieve a certain solder hierarchy (the hierarchy of the melting temperatures of different solders) as explained below. In such embodiments, the etch of copper **430.1** can be omitted. Nickel **448** can also be omitted.

As stated above, gold **444** can be omitted. The etch of copper **430.1** will then expose nickel **448**.

In some embodiments, the copper **430.1** is not etched away. The copper oxide (not shown) on copper **430.1** can be removed by a wet etch. The copper oxide can also be removed by a solder flux during soldering of the interposer wafer to BT substrate **110** (the soldering operation is described below). Layers **444**, **448** can be omitted.

Metal contact pads **340** are metal protrusions formed by the metal layers **430.2**, **448**, **444**, **430.1**, **420** below the bottom surface of silicon **140**. In some embodiments, the height Hd of metal contact pads **340** is 50 μm.

A dielectric layer (not shown) can optionally be formed on the bottom surface of the interposer to cover the silicon **140** but not the metal contact pads **340**. The dielectric can be formed without photolithography. See the aforementioned U.S. Pat. Nos. 6,322,903 and 6,498,381 and U.S. patent application Ser. No. 10/410,929.

The interposer wafer can be diced if desired. The dicing can be performed at the same time as the interposer wafer thinning if vias were formed along the dicing lines (scribe lines) simultaneously with vias **330** at the stage of FIG. **4**. See U.S. Pat. No. 6,498,074 issued Dec. 24, 2002 to Siniaguine et al., entitled "THINNING AND DICING OF SEMICONDUCTOR WAFERS . . . ", incorporated herein by reference.

In some embodiments, the interposer wafer is not diced. ICs **124** will be attached to the undiced interposer wafer.

In some embodiments, metal **430.2** does not fill the through-silicon vias. Metal **430.2** is a thin film deposited over the via sidewalls, and it can be part of a layer **136**. See the aforementioned U.S. Pat. No. 6,498,381. Also, in some embodiments the contact pads **340** do not protrude out of the bottom surface of the interposer.

BT substrate **110** (FIGS. **9** and **10**) is formed from one or more BT layers laminated in a conventional manner. Three layers **110.1**, **110.2**, **110.3** are shown, but any number of layers can be present. Thin film metal layers **910** (e.g. copper) are formed on top of BT layers **110**.*i* (i=1, 2, 3) and on the bottom side of layer **110.1** in a conventional manner to provide signal routing paths and ground and power planes. Layers **910** are interconnected through vias in the BT layers **110**.*i* (i.e. **110.1**, **110.2**, **110.3**) using known techniques to provide conductive paths between contact pads **350** and contact pads **360**. The bottom metal layer **910** provides contact pads **360** (FIG. **3**) at the bottom surface of BT substrate **110**.

Top contact pads **350**, and the top metal layer **910**, are formed below the top BT layer **110.3**. In FIG. **9**, the top contact pads **350** and the top metal **910** are formed on BT layer **110.2**. Layer **110.3** has vias **210**B exposing the contact pads **350**. Vias **210**B form cavities in the top surface of BT substrate **110**. Silicon interposer contact pads **340** will be inserted into these cavities to form a reliable mechanical and electrical contact.

In one embodiment, each BT substrate cavity **210**B has a diameter Dcav=150 μm to accommodate a 50 μm to 60 μm diameter Dc of the contact pads **340**. Dc can be calculated starting with the diameter Dv (FIG. **4**) of via **330**, by subtracting double the thickness of the layers **410**, **420**, **430.1**, **444**, **448**. The depth Hcav of each cavity **210**B (about equal to the thickness of layer **110.3**) is 50 μm for a 50 μm height Hd of contact pads **340** (Hcav is measured to the top surface of contact pads **350**).

Cavities **210**B are filled with solder paste **930**. In one embodiment, the solder paste is deposited to cover the BT substrate, and then is wiped off by a squeegee blade to force the solder into cavities **210**B and remove it from the top surface of BT layer **110.3**. The solder is chosen to have a high melting temperature to provide a desired solder hierarchy for subsequent solder attachment of dies **124** and PCB **130**. In some embodiments, the solder paste is a no-clean type NC253 available from AIM of Montreal, Canada. This paste incorporates solder flux but there is no need to clean the flux after the solder reflow.

No-flow underfill **940** (dielectric) is dispensed on BT substrate **110** at the future site of interposer **120**. In some embodiments, the underfill is type STAYCHIP™ 2078E available from Cookson Electronics, a company having an office in Georgia, the United States of America. This underfill performs both the underfill function and the solder flux function. The underfill can be dispensed with a dispensing system of type CAMELOT/SPEEDLINE 1818 available from Cookson Electronics.

Interposer wafer **120** is placed on BT substrate **110** (FIG. **10**). Protruding contact pads **340** enter the BT substrate cavities **210**B and contact the solder **930** but do not necessarily reach the metal **910** of contact pads **350**. A uniform height of contact pads **340** is not required for a good electrical contact.

Underfill **940** spreads out under the interposer. In the embodiment shown, the bottom surface of silicon **140** does not reach the BT substrate. Underfill **940** helps insulate the silicon from solder **930**. Therefore, it is unnecessary to form a dielectric layer on the bottom silicon surface.

The interposer placement can be performed with a placement tool of type SIPLACE F4 available from Siemens corporation of Germany. The placement tool picks up the interposer from the top by a vacuum holder **1010** schematically shown in FIG. **10**. The vacuum pick-up flattens the interposer if the interposer is warped. Dielectric **144** protects the interposer from being damaged by the holder. Other placement tools, with vacuum and non-vacuum holders, known or to be invented, can also possibly be used.

The structure is heated to reflow the solder paste **930** and cure the underfill **940**. The solder wets the bottom and side

surfaces of copper contact pads **340**. In one embodiment, the final value of the gap G**1** between the silicon **140** and the BT substrate **110** is 25 μm. The gap values of 5 to 10 μm and larger are believed to be appropriate to provide sufficient electrical insulation if no dielectric is formed on the bottom surface of silicon **140**. The contact **340** portion inside the vias **210**B is 25 μm high (C**1**=25 μm in FIG. **10**). The value C**1** is in the range from 10 μm to 45 μm in some embodiments.

If the solder **720** was placed on the interposer before the interposer attachment to BT substrate **110**, solder **720** may or may not be reflowed during this step depending on the solder **720** melting temperature.

Then vacuum holder **1010** releases the interposer.

In some embodiments, the vacuum holder releases the interposer before the reflow of solder paste **930**. The interposer stays in place due to a surface tension between silicon **140** and the underfill **940**. Multiple interposers can be placed on BT substrate **110**, and the solder reflow and underfill curing can be performed in a single heating step for all the interposers, after the vacuum holder **1010** is removed. A similar technique has previously been applied for flip-chip mounting of dies on a BT substrate, as described in M. Painaik and J. Hurtley, "Process Recommendations for Assembly of Flip Chips using No-flow Underfill", Technical Bulletin, Cookson Semiconductor.

FIG. **11** illustrates another embodiment. The BT substrate **110** is similar to the BT substrate of FIGS. **9** and **10**, but a metal layer **220** is formed on the bottom and sidewalls of each BT substrate cavity **210**B. Metal **220** is believed to improve the strength and the electrical conductivity of the solder bond between contact pads **340** and contact pads **350**. Metal layer **220** can be copper deposited on the BT substrate and patterned by lift-off or some other process. In FIG. **11**, metal **220** extends out of BT substrate cavities **210**B to the top surface of the BT layer **110.3** but does not provide any interconnects or other elements on the top surface of layer **110.3**. Metal **220** is present only in the immediate vicinity of each BT substrate cavity **210**B. Each contact pad **350** includes the portions of metal layers **910**, **220** on the bottom and sidewalls of the corresponding BT substrate cavity **210**B. In other embodiments, metal **220** provides an additional level of interconnects and/or a power or ground plane on layer **110.3**.

In the BT embodiment described above, the BT layers **110.1**, **110.2**, **110.3** are laminated on top of each other. Each layer **110.1**, **110.2** is a solid sheet placed on the structure in a solid form. In some embodiments, the top layer **110.3** is made from a material different from the material of layers **110.1**, **110.2**. For example, solder dam materials can be used, such as photoimageable polyimide, Dupont VACREL 8100, Dupont Flexible PhotoImageable Coverlay (PIC) 1000 & 2000, Shipley (Dynachem) DynaMASK 5000, Shipley ConforMASK 2500, and possibly others. Some of the solder dam materials (e.g. polyimide) can be deposited in a liquid (possibly viscous) form and then cured.

In some embodiments, solder **720** has a lower melting temperature than solder **930**. Therefore, solder **930** is not melted during the attachment of dies **124**.

In other embodiments, solder **720** initially has the same or higher melting temperature than solder **930**, but the melting temperature of solder **930** is increased during the attachment of interposer **120** to BT substrate **110**. The melting temperature of solder **930** becomes higher than the melting temperature of solder **720**. The melting temperature of solder **930** is increased because the copper from layer **220** and/or layer **350** dissolves in solder **930**. In the embodiment of FIG. **12**, copper **430.1** was not etched away as in FIG. **8**, so copper **430.1** can also dissolve in solder **930**. In some embodiments, solders **720**, **930** are initially the same solder (i.e. the same material), which simplifies the wafer fabrication. For example, a eutectic solder Sn/Ag3.0/Cu0.5 (known as type LF128 from AIM) can be used.

Metal contact pads **136**C can be formed from a material other than copper. This may be desirable if solder **720** is placed on the interposer before the interposer attachment to BT substrate **110**, because copper in pads **136**C could diffuse in solder **720** during the interposer attachment to the BT substrate and increase the solder **720** melting temperature. In some embodiments, interconnects **136** are made of copper, but contact pads **136**C are plated with a layer **710** of nickel or gold. Layer **710** does not dissolve in solder **720** and provides a barrier for the copper diffusion from interconnects **136**, so the melting temperature of solder **720** does not change. In other embodiments, the melting temperature of solder **720** changes during the attachment of the interposer to substrate **110**, but the melting temperature of solder **720** remains below the melting temperature of solder **930**.

FIGS. **13**–**14** illustrate a possible manufacturing sequence with multiple die levels **124.1**, **124.2**, **124.3** attached to the packaging substrate. The packaging substrate is manufactured as in FIG. **10**, **11** or **12**. The interposer vias are marked **330.0** (instead of **330** as in FIG. **3**), the contact pads at the bottom of the interposer are marked **340.0**, and the solder at the top is marked **720.0**. The cavities at the top of the interposer are marked **210.0**.

Each die **124.1** has one or more metalized through vias **330.1** formed in the die's semiconductor substrate **140.1** (e.g. monocrystalline silicon). Each via **330.1** passes between the top and bottom surfaces of substrate **140.1**. Conductive paths are provided from contact pads at the top of each die **124.1** to contact pads **340.1** at the bottom of the die through the vias **330.1**. Contact pads **340.1** protrude out of the respective vias **330.1**. The dies **124.1** can be manufactured using the same techniques as described above for interposer **120** (involving the wafer thinning to expose the contact pads **340.1**). Each die may have the same general structure as interposer **120** in FIGS. **10**–**12**. Of course, the circuitry in dies **124.1** does not have to be identical to the interposer circuitry, and different dies **124.1** may differ from each other. Also, contact pads **340.1** may have smaller dimensions, and may be placed closer to each other, as they do not have to meet the BT substrate dimension requirements. Pads **340.1** can be copper/nickel/gold structures as in FIG. **12**, or they can be made from other materials. The metal in vias **330.1** is insulated from substrate **140.1** by a dielectric **410** (FIG. **12**).

In some embodiments, dies **124.1** and interposer **120** have devices (e.g. transistors, diodes, and others) manufactured at the top surface (active surface). Transistor source/drain regions, diodes' cathodes and anodes, and other elements can be formed in semiconductor substrates **140.0**, **140.1** of interposer **120** and dies **124.1** at the top surface of the respective substrates. Cavities **210.1** are formed in the top surface of dies **124.1**, and solder balls **720.1** are formed in the cavities on the dies' top contact pads, possibly before the wafer thinning operation exposing the contact pads **340.1**, as in FIGS. **10**–**12**.

Dies **124.2** may be similar to dies **124.1**. Dies **124.2** include metalized vias **330.2** in semiconductor substrates **140.2**, and contact pads **340.2** protruding out of the vias on the bottom. Dies **124.2** may contain devices (e.g. transistors, diodes, and others) manufactured at the top surface (active surface) of semiconductor substrates **140.2**. Transistor

source/drain regions and other elements can be formed in semiconductor substrates **140.2** at the top surface. Cavities **210.2** are formed in the top surface of dies **124.2**, and solder balls **720.2** are formed in the cavities on the dies' top contact pads, possibly before the wafer thinning operation exposing the contact pads **340.2**, as in FIGS. **10**–**12**.

The third level dies **124.3** are like dies **124** in FIGS. **2** and **3**. The semiconductor substrates of dies **124.3** are marked **140.3**. The dies' active surface is the bottom surface.

The manufacturing sequence is shown in FIG. **14**. Interposer **120** is attached to BT substrate **110** as described above with respect to FIGS. **10**–**12** (step **1420**). During this step, the melting temperature of solder **930** (FIGS. **10**–**12**) increases and becomes higher than the melting temperature of solders **720.0**, **720.1**, **720.2**. Solder **720.0** can be placed on the interposer after the attachment to BT substrate **110**. If solder **720.0** is placed before the attachment, solder **720.0** may or may not be melted during the attachment step, but its melting temperature does not change because this solder is not in contact with copper (there is no copper on the top surface of the top contact pads of the interposer). The melting of solder **720.0** does not present a problem because the dies **124.1** have not yet been attached to the interposer. If solder **720.0** is placed on the interposer after the attachment to the BT substrate, solder **720.0** can be reflowed in a separate step before the attachment of dies **124.1**. The solder reflow does not increase the melting temperature of solder **720.0**.

In some embodiments, all of solders **720.0**, **720.1**, **720.2**, **930** are initially the same material. In an illustrative example, the solders are eutectic type LF128 described above, with the initial melting temperature of 218° C. The melting temperature of solder **930** increases to about 230° C. in step **1420**.

At step **1430**, dies **124.1** are soldered to interposer **120** with solder **720.0**, at a temperature of about 218° C. or higher, but below 230° C. not to melt the solder **930**. Contact pads **340.1** are inserted into cavities **210.0** of interposer **120**. The copper from contact pads **340.1** dissolves in solder **720.0** and increases its melting temperature to about 230° C. Solder **720.1** may be placed on dies **124.1** in advance and may melt, but its melting temperature does not increase because the solder **720.1** is not in contact with copper or other material that could increase the solder melting temperature (the top surface portions of the top contact pads of die **124.1** are made of suitable materials to ensure that the solder melting temperature does not increase).

At step **1440**, dies **124.2** are attached to dies **124.1** with solder **720.1**, at a temperature below 230° C. Contact pads **340.2** are inserted into cavities **210.1** of dies **124.1**. Solders **720.0** and **930** do not melt. The melting temperature of solder **720.1** is increased to about 230° C. due to the diffusion of copper from contact pads **340.2**.

At step **1450**, dies **124.3** are flip-chip attached to dies **124.2** with solder **720.2**, at a temperature below 230° C. Bumps **150** are inserted into cavities **210.2** of dies **124.2**. Solders **930**, **720.0**, **720.1** do not melt. If desired, bumps **150** may include copper to increase the melting temperature of solder **720.2**. The higher melting temperature may be desirable to prevent the solder melting during the attachment of BT substrate **110** to PCB **130** (FIG. **3**). For example, the solder **134** used for the PCB attachment may be the same material (LF128) as the solders **930**, **720.0**, **720.1**, **720.2**.

Many variations are possible. For example, any number of dies can be used at each level. Also, one or more dies **124.2** can be attached directly to interposer **120**, i.e. there may be three levels of dies over one interposer area but only two levels of dies over another interposer area. Any number of die levels can be present in different interposer areas. Dies **124.3** may be omitted. Dies **124.2** may have no contact pads on the top, or they may have contact pads on the top which can be wire bonded to other substrates.

Other solder types and melting temperatures can be used, and materials other than copper can be used to increase the melting temperatures. Different materials and contact pad structures can be used in different dies. Different semiconductor substrates can be different semiconductor materials in the same structure.

Varying the solder melting temperature to achieve a desired solder hierarchy is not limited to the interposer structures, but may be used in other semiconductor packages, known or to be invented, with or without interposers.

FIG. **15** shows another manufacturing sequence. See also the aforementioned U.S. Pat. No. 6,322,903. Below, numerals **124.2**, **124.1**, **120** denote both the dies as shown in FIG. **13** and the wafers from which the dies are obtained. Dies **124.3** are attached to wafer **124.2** (step **1510**) before the wafer **124.2** is thinned and diced. Contacts **340.2** are not yet exposed. Then the wafer **124.2** is thinned to expose the contact pads **340.2** (step **1520**), and diced (step **1524**). Then dies **124.2** are attached to wafer **124.1** (step **1530**) before the wafer is thinned and diced. Then wafer **124.1** is thinned to expose contact pads **340.1** (step **1540**), and diced (step **1544**). Then dies **124.1** are attached to interposer wafer **120** (step **1550**) before the interposer wafer is thinned and diced. Then interposer wafer **120** is thinned to expose the contact pads **340.0** (step **1560**), and diced (step **1564**). Then the interposer is attached to BT substrate **110** (step **1570**). All the thinning and dicing operations (steps **1520**, **1524**, **1540**, **1544**, **1560**), **1564** are performed when the wafer or die being thinned has been attached to other dies. The structure has therefore a greater mechanical strength and greater thermal dissipation capabilities for the thinning operation. Plasma and non-plasma thinning process can be used, and the solder can be protected with suitable underfill or other coatings. All the solders can be initially the same material. The solder attachment increases the melting temperature of each solder being reflowed, so the solder does not melt in the subsequent soldering steps, as in FIG. **14**.

The invention is not limited to any particular manufacturing sequence however.

In some embodiments, the same dimensions are obtained for the attachment of dies **124.1**, **124.2**, **124.3** as for the attachment between the BT substrate and the interposer. More particularly, the final value of the gap between the silicon **140.1** and interposer **120** or between the silicon **140.2** and the dies **124.1** is 25 μm (gap values of 5 to 10 μm and larger are believed to be appropriate to provide sufficient electrical insulation if no dielectric is formed on the bottom surface of silicon **140.1** or **140.2**); the portions of contacts **340.1**, **340.2**, **150** inside the respective cavities **210.0**, **210.1**, **210.2** are 25 μm high (note dimension C**1** in FIG. **10**). This value is in the range from 10 μm to 45 μm in some embodiments. The top dielectric layer on interposer **120** and dies **124.1**, **124.2** is 50 μm thick. Other dimensions can also be used.

Underfill (not shown) can be injected between the interposer and the dies **124.1**, between the dies **124.1** and **124.2**, and between the dies **124.2** and **124.3** using known techniques. No flow underfill can also be used.

FIGS. **16**A, **16**B illustrate an embodiment in which a contact pad **350** (made from metal **910**) covers only a portion of the bottom surface of opening **210**B in BT substrate **110**. FIG. **16**B is a top view, and FIG. **16**A shows

a vertical cross section along the line A—A in FIG. **16**B. Only portions of interposer **120** and substrate **110** are shown, with only one contact **340** and opening **210**B, though many such contacts and openings can be present. The contact **340** at the bottom of interposer **120** is shown to be formed by metal **430** in through silicon via **330**, but the contact **340** may have any structure, including the structures of FIGS. **10**–**13**, the structures used for contacts **150** of FIGS. **1**–**2**, and other structures known or to be invented. Substrate **110** can be a non-BT substrate, e.g. it can be a PCB or some other integrated circuit packaging substrate, or an integrated circuit die or an integrated circuit wafer (e.g. such as a die **124.1** or **124.2** in FIG. **13**). Substrate **120** can be a semiconductor integrated circuit or a non-semiconductor packaging substrate.

The advantage of the contact pad **350** as in FIGS. **16**A, **16**B is that the solder **930** does not wet the dielectric **110.2** on the bottom of opening **210**B. Therefore, more solder will gather closer to contact **340**, and the solder will reach higher up along the contact surface. This is believed to improve the mechanical strength and electrical conductivity of the solder joint. Less solder is needed for good mechanical strength and electrical conductivity, so the diameter of opening **230**B can be reduced (this diameter controls the solder volume by controlling the volume of the solder paste in opening **230**B).

In FIG. **16**B, only one conductive line **910** extends from contact pad **350**, but many lines **910** can extend from the contact pad. The width W**1** (20–30 μm in some embodiments) of line **910** is shown as smaller than the diameter of pad **350**, but this is not necessary. W**1** can be any number, with any relationship between W**1** and pad **350**. Also, the invention is not limited to the circular shapes of pad **350** and opening **210**B. Any shapes can be employed.

In FIG. **17**, contact pad **350** includes two conductive layers **910.1**, **910.2**. The bottom layer **910.1** covers the whole bottom of opening **230**B, and the top layer **910.2** covers only a portion of the bottom of opening **230**B. Bottom layer **910.1** is less solder wettable than the top layer **910.2**. In still other embodiments, bottom layer **910.1** does not cover the whole bottom of opening **230**B, and the top layer **910.2** covers a smaller portion of the bottom of opening **230**B than the top layer **910.1**.

FIGS. **18**, **19** illustrate possible shapes of solder **930** in the embodiments of FIGS. **16**A, **16**B, **17** after the solder reflow before the attachment of interposer **120** to the BT substrate. The solder shape is an approximation; the solder is assumed to wet only the pad **350**, ignoring the line **910** extending from the pad (see FIG. **16**B). It is assumed that the solder shape is a sphere truncated at the bottom, of some diameter Ds. Symbol Hs denotes the solder ball height above contact pad **350**. Hc is the depth of cavity **210**B. Db is the diameter of pad **350**. Dc is the diameter of cavity **210**B (shown as Dcav in FIG. **9**).

Assuming the solder paste filled the cavity before the solder reflow, and ignoring the thickness of pad **350**, the solder paste volume Vc was the cavity volume, i.e.:

$$Vc=\pi*Dc^2*Hc/4 \quad (1)$$

We will assume that the solder paste was half solder and half flux. After the reflow, the solder volume Vs is therefore one half of Vc, i.e.

$$Vs=\pi*Dc^2*Hc/8 \quad (2)$$

Also, Vs is the volume of the truncated solder sphere, and therefore:

$$Vs=\pi*Ds^3/6-\pi*(3*Db^2+4*h^2)*h/24 \quad (3)$$

where h=Ds−Hs.

From (2) and (3) we obtain:

$$4*Ds^3-(3*Db^2+4*h^2)*h=3*Dc^2*Hc \quad (4)$$

where

$$Ds=(4*h^2+Db^2)/(4*h) \quad (5)$$

and, as noted above,

$$Hs=Ds-h \quad (6)$$

Example: suppose Dc=150 μm, Hc=50 μm, Db=80 μm. From equation (4):

h=20.57 μm

From equation (5):

Ds=98.35 μm

From equation (6):

Hs=77.78 μm

Other examples are given in the following Table 2 for Dc=150 μm. The dimensions are in micrometers. Tilda ("~") denotes approximation.

TABLE 2

Db	Ds	Hs	Solder Profile in FIG. 19
65	~96	~83	930A
80	~98	~78	930B
100	~105	~69	930C
150	~170	~45	930D

The invention is not limited to the embodiments described above. For example, non-eutectic solders can be used. The "melting temperature" is any temperature as high or higher than the solidus and but not higher than the liquidus. As is known, the solidus is the highest temperature at which 100% of the solder is solid, i.e. the solder is just beginning to melt. The liquidus is the lowest temperature at which 100% of the solder is liquid. For a eutectic solder, the solidus and the liquidus are the same.

Also, in some embodiments, the cavities **210**B (FIG. **9**) extend through two or more BT layers, for example, through layers **110.3** and **110.2**. Contact pads **350** can thus be formed from the metal layer **910** located between the BT layers **110.1**, **110.2**. The layer **910** on BT layer **110.2** can be used for interconnects, power or ground planes, or other elements as discussed above. The invention is not limited to particular materials, dimensions and processes. For example, anisotropic adhesive, conductive epoxy, and/or thermocompression can be used instead of solder. Bumps **150** or contacts **340**, **340.0**, **340.1**, **340.2** may include a solder layer. For example, they may include copper pillars with solder thereon, or they can be solder bumps. The invention is applicable to non-silicon semiconductor integrated circuits. The integrated circuits can be entire wafers or dice obtained by dicing the wafers.

The interposer may include capacitors having a capacitance of 5.0 pF or higher. For example, capacitance values of 10 pF, 100 pF, or higher have been used on circuit boards to decouple the power lines from the ground lines or for other purposes, and such capacitors can be manufactured in the interposer. Resistors having resistance values of 10 Ω and higher (e.g. 50 Ω, 100 Ω, or 150 Ω) are used on circuit boards for line termination and other purposes, and they can be manufactured in the interposer. Inductors having inductance values of 100 nH or higher are commonly used on circuit boards and can be manufactured in the interposer. The invention is not limited to particular capacitance, resis-

tance or inductance values. Other embodiments and variations are within the scope of the invention, as defined by the appended claims.

The invention claimed is:

1. A manufacturing method comprising:

(1) obtaining a first integrated circuit structure comprising:

a semiconductor substrate;

one or more first conductive contact pads protruding out at a surface of the first integrated circuit structure;

(2) obtaining a first substrate comprising a circuit which comprises one or more first conductive contact pads, wherein at least a portion of each of the one or more first contact pads of the first substrate is located in a corresponding via in a surface of the first substrate, the portion having a first surface facing a sidewall of the via and a second surface opposite to the first surface, the second surface facing an interior of the via and extending upward along the sidewall;

(3) inserting the protruding first contact pads of the first integrated circuit structure into the corresponding vias of the first substrate and attaching the protruding first contact pads of the first integrated circuit structure to the first contact pads of the first substrate.

2. The method of claim **1** wherein the operation (3) is performed without melting the protruding first contact pads of the first integrated circuit structure.

3. The method of claim **2** wherein in the operation (3) the first contact pads of the first integrated circuit structure are soldered to the first contact pads of the first substrate.

4. The method of claim **1** wherein an outer protruding surface of the first contact pads of the first integrated circuit structure is made of copper and/or gold and/or nickel.

5. The method of claim **1** wherein the first substrate comprises a semiconductor substrate.

6. The method of claim **1** wherein the first substrate is an integrated circuit packaging substrate which does not comprise a semiconductor substrate.

7. The method of claim **1** wherein the first substrate is a printed circuit board.

8. The method of claim **1** wherein in the operation (3) the attachment is performed without solder with thermal or thermosonic compression.

9. The method of claim **1** wherein after the operation (3) a spacing between the bottom surface of the semiconductor substrate and the top surface of the first substrate is at least 5 μm.

10. The method of claim **1** wherein at least a portion of the bottom surface of the semiconductor substrate is not covered by any dielectric layer in the first integrated circuit structure.

11. The method of claim **1** wherein at least a portion of the bottom surface of the semiconductor substrate is covered by a dielectric in the first integrated circuit structure.

12. A manufacturing method comprising:

(1) obtaining a first integrated circuit structure comprising:

a semiconductor substrate;

one or more first conductive contact pads protruding out at a surface of the first integrated circuit structure;

(2) obtaining a first substrate comprising a circuit which comprises one or more first conductive contact pads, wherein at least a portion of each of the one or more first contact pads of the first substrate is located in a corresponding via in a surface of the first substrate;

(3) inserting the protruding first contact pads of the first integrated circuit structure into the corresponding vias of the first substrate and attaching the protruding first contact pads of the first integrated circuit structure to the first contact pads of the first substrate;

wherein in the operation (3) at least 10 μm of each protruding first contact pad is inside the corresponding via.

13. The method of claim **1** wherein the first integrated circuit structure is an interposer that comprises no semiconductor circuit elements in the semiconductor substrate.

14. The method of claim **1** wherein the first integrated circuit structure comprises a semiconductor circuit element in the semiconductor substrate.

15. A manufacturing method comprising:

(1) obtaining a first integrated circuit structure comprising:

a semiconductor substrate;

one or more first conductive contact pads protruding out at a surface of the first integrated circuit structure;

(2) obtaining a first substrate comprising a circuit which comprises one or more first conductive contact pads, wherein at least a portion of each of the one or more first contact pads of the first substrate is located in a corresponding via in a surface of the first substrate;

(3) inserting the protruding first contact pads of the first integrated circuit structure into the corresponding vias of the first substrate and attaching the protruding first contact pads of the first integrated circuit structure to the first contact pads of the first substrate;

wherein each first contact pad of the first substrate covers a bottom and entire sidewalls of the corresponding via.

16. A manufacturing method comprising:

(1) obtaining a first integrated circuit structure comprising:

a semiconductor substrate;

one or more first conductive contact pads protruding out at a surface of the first integrated circuit structure;

(2) obtaining a first substrate comprising a circuit which comprises one or more first conductive contact pads, wherein at least a portion of each of the one or more first contact pads of the first substrate is located in a corresponding via in a surface of the first substrate; p1

(3) inserting the protruding first contact pads of the first integrated circuit structure into the corresponding vias of the first substrate and attaching the protruding first contact pads of the first integrated circuit structure to the first contact pads of the first substrate;

(4) obtaining a second integrated circuit structure comprising:

a semiconductor substrate;

one or more first conductive contact pads protruding out at a surface of the second integrated circuit structure;

wherein the first integrated circuit structure further comprises one or more second conductive contact pads, wherein at least a portion of each of the one or more second contact pads of the first integrated circuit structure is located in a corresponding via in a surface of the first integrated circuit structure;

wherein the method further comprises:

(5) inserting the protruding first contact pads of the second integrated circuit structure into the corresponding vias of the first integrated circuit structure and attaching the protruding first contact pads of the second integrated circuit structure to the second contact pads of the first integrated circuit structure.

17. The method of claim **16** wherein the first contact pads of the first integrated circuit structure are located on a first side of the first integrated circuit structure, and the second contact pads of the first integrated circuit structure are

located on a second side of the first integrated circuit structure, the first side being opposite to the second side.

18. A manufacturing method comprising:

(1) obtaining a first integrated circuit structure comprising:

a semiconductor substrate;

one or more first conductive contact pads protruding out at a surface of the first integrated circuit structure;

(2) obtaining a first substrate comprising a circuit which comprises one or more first conductive contact pads, wherein at least a portion of each of the one or more first contact pads of the first substrate is located in a corresponding via in a surface of the first substrate;

(3) inserting the protruding first contact pads of the first integrated circuit structure into the corresponding vias of the first substrate and attaching the protruding first contact pads of the first integrated circuit structure to the first contact pads of the first substrate;

wherein each first contact pad of the first integrated circuit structure is provided by a conductor formed in a corresponding through via in the semiconductor substrate and protruding out of the through via.

19. The method of claim **18** wherein the first contact pads of the first integrated circuit structure protrude out at the surface which is opposite to an active surface of the first integrated circuit structure.

20. The method of claim **1** wherein in the operation (3) the first contact pads of the first integrated circuit structure are soldered to the first contact pads of the first substrate.

21. The method of claim **20** wherein in the operation (3) the first contact pads of the first integrated circuit structure are soldered to the second surfaces of the portions of the first contact pads of the first substrate.

22. The method of claim **1** wherein in the operation (3) the protruding first contact pads of the first integrated circuit structure are inserted into the corresponding vias deeper than at least tops of the second surfaces of portions of the first contact pads of the first substrate.

23. The method of claim **1** wherein the operation (2) comprises:

forming a dielectric layer which is part of the first substrate, wherein each said via is a via in the dielectric layer; and then

forming a conductive layer over the dielectric layer to provide at least said portions of the first contact pads of the first substrate.

24. A manufacturing method comprising:

(1) obtaining a first integrated circuit structure comprising:

a semiconductor substrate;

one or more first conductive contact pads protruding out at a surface of the first integrated circuit structure;

(2) obtaining a first substrate comprising a circuit which comprises one or more first conductive contact pads, wherein at least a portion of each of the one or more first contact pads of the first substrate is located in a corresponding via in a surface of the first substrate, wherein obtaining the first substrate comprises:

(2A) forming a dielectric layer which is part of the first substrate, wherein each said via is a via in the dielectric layer; and then

(2B) forming a conductive layer on a sidewall of each said via to provide at least a first portion of each first contact pad of the first substrate;

(3) inserting the protruding first contact pads of the first integrated circuit structure into the corresponding vias of the first substrate and attaching the protruding first contact pads of the first integrated circuit structure to the first contact pads of the first substrate.

25. The method of claim **24** wherein each first contact pad of the first substrate comprises a second portion formed before operation (2A).

26. The method of claim **24** wherein each first contact pad of the first substrate comprises a second portion underlying the dielectric layer.

27. The method of claim **24** wherein each first contact pad of the first substrate comprises a portion provided by said conductive layer on a bottom of the corresponding via.

* * * * *