US 20110193219A1

(19) United States

(12) Patent Application Publication

(10) Pub. No.: US 2011/0193219 A1

(43) Pub. Date: Aug. 11, 2011

LAI et al.

(54) SEMICONDUCTOR DEVICE AND SEMICONDUCTOR ASSEMBLY WITH LEAD-FREE SOLDER

(75) Inventors: **Yi-Jen LAI**, Chang Hua City (TW); **Chih-Kang Han**, Hsinchu City (TW); **Chien-Pin Chan**, Pingzhen City (TW); **Chih-Yuan Chien**, Zhubei City (TW); **Huai-Tei Yang**, Hsinchu City (TW)

(73) Assignee: **TAIWAN SEIMCONDUCTOR MANUFACTURING COMPANY, LTD.**, Hsinchu (TW)

(21) Appl. No.: **12/702,636**

(22) Filed: **Feb. 9, 2010**

Publication Classification

(51) **Int. Cl.**
H01L 23/498 (2006.01)
H01L 21/60 (2006.01)

(52) **U.S. Cl.** **257/737**; 438/613; 257/E21.509; 257/E23.06

(57) **ABSTRACT**

A semiconductor device includes a bump structure over a pad region. The bump structure includes a copper layer and a lead-free solder layer over the copper layer. The lead-free solder layer is a SnAg layer, and the Ag content in the SnAg layer is less than 1.6 weight percent.

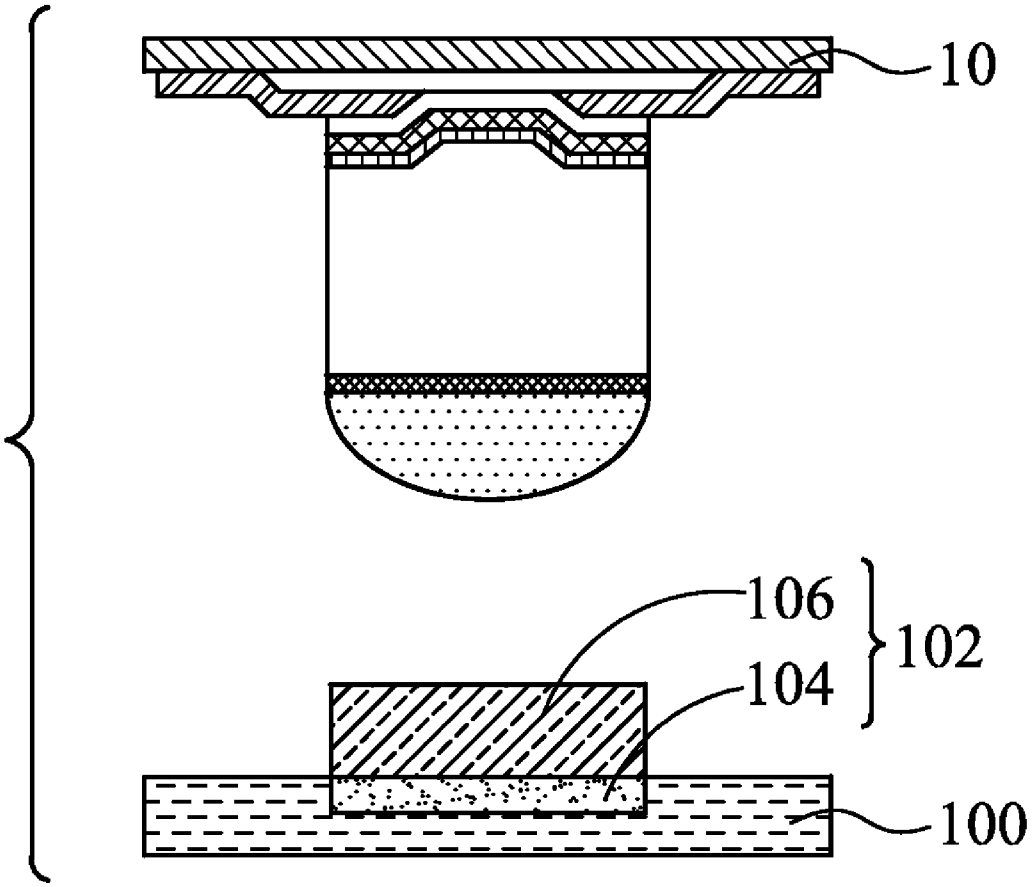

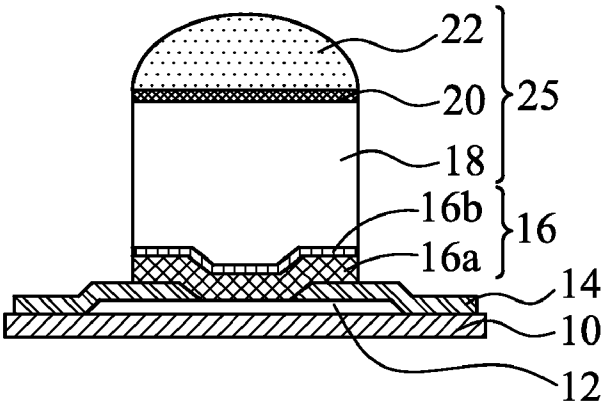
22
20
25
18
16b
16
16a
14
10
12

FIG. 1

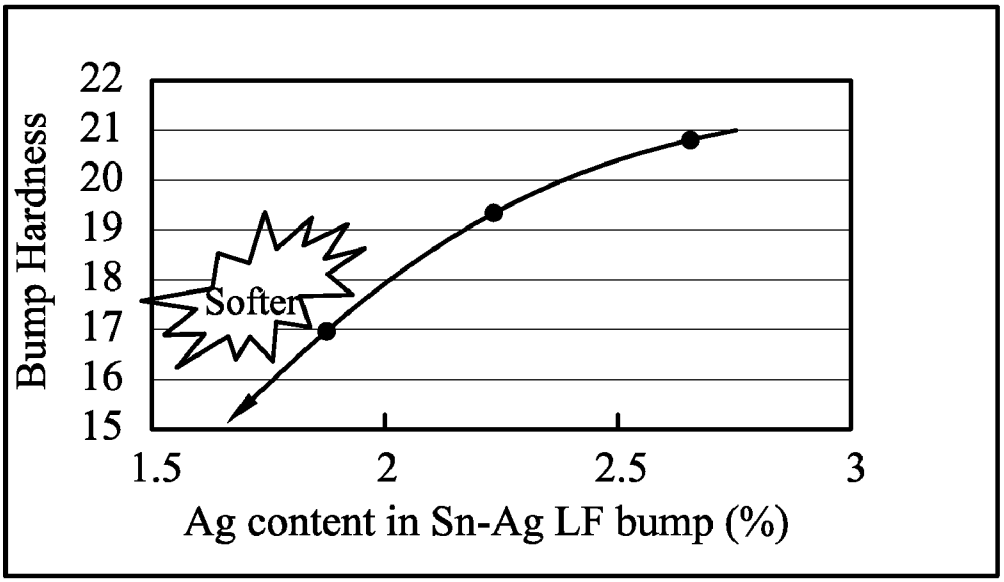
Bump Hardness
22
21
20
19
18
17
16
15
Softer
1.5
2
2.5
3
Ag content in Sn-Ag LF bump (%)

FIG. 2

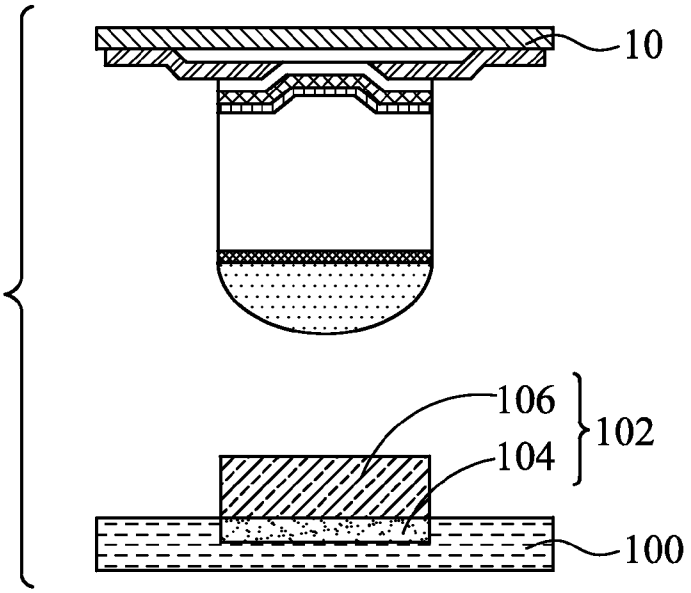

FIG. 3A

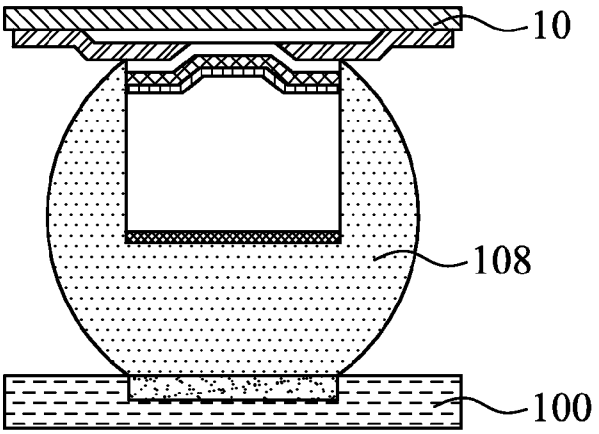

FIG. 3B

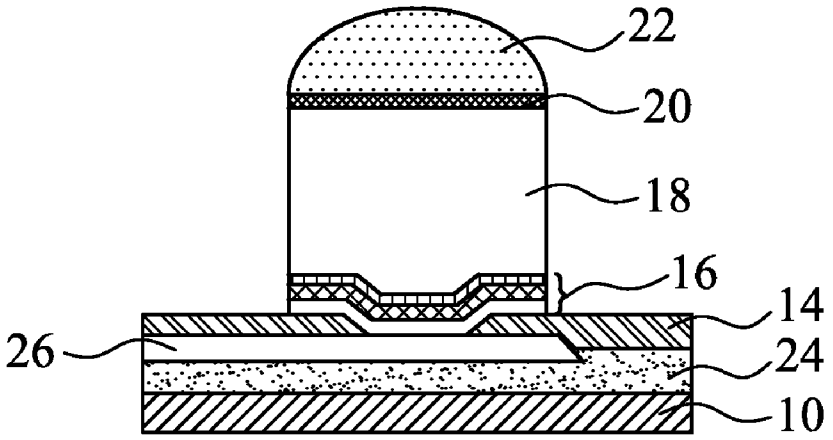

FIG. 4

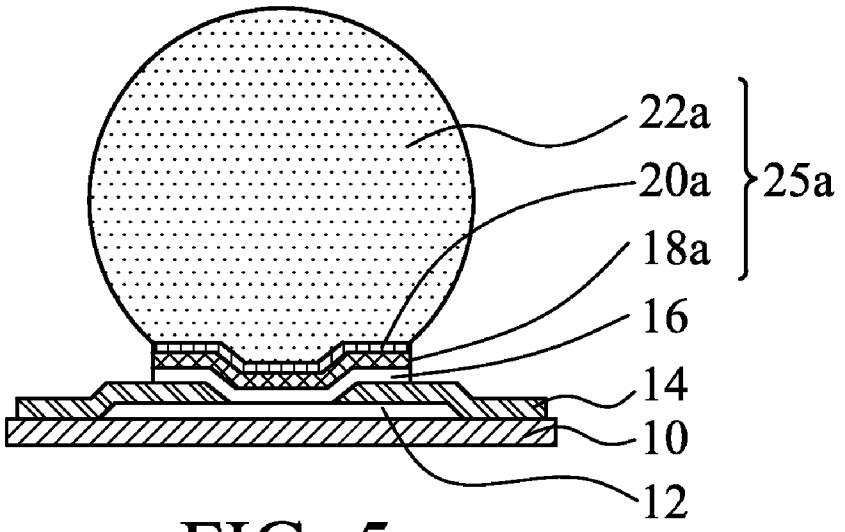

FIG. 5

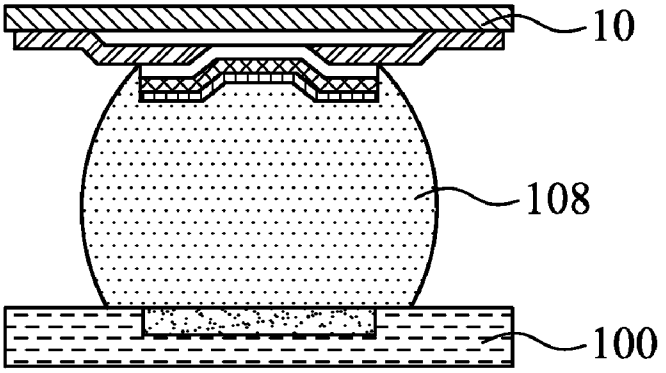

FIG. 6

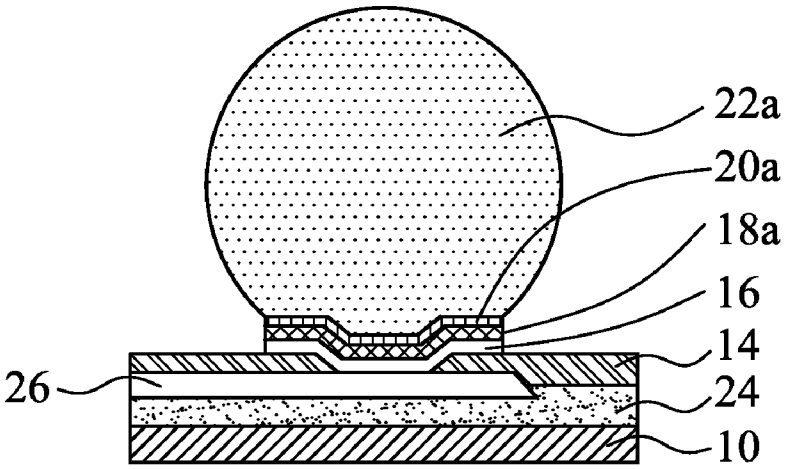

FIG. 7

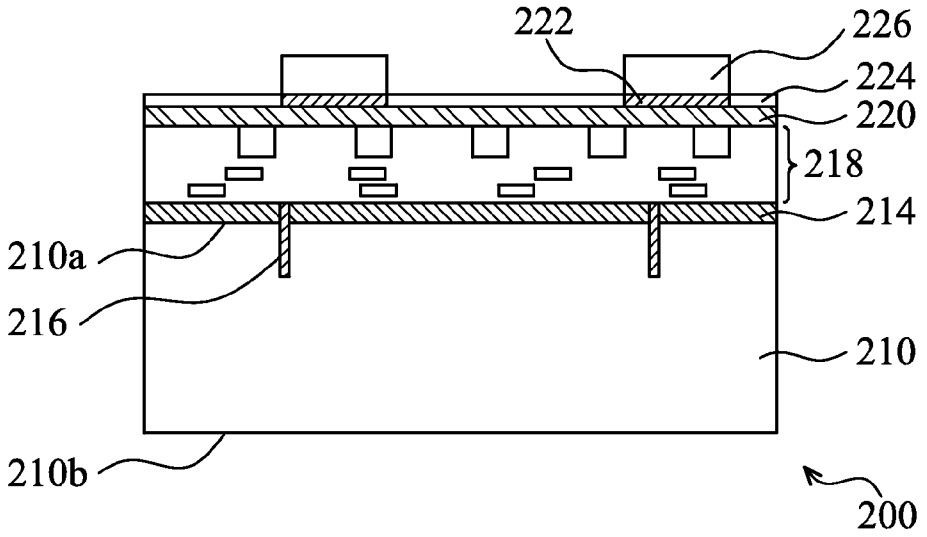
222
226
224
220
218
214
210a
216
210
210b
200

FIG. 8A

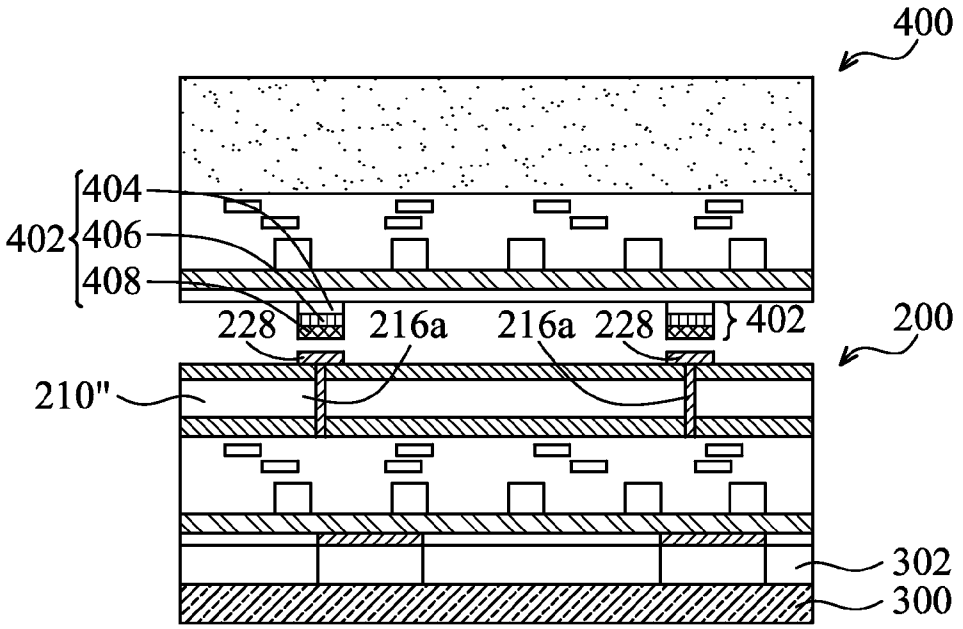
400
404
402
406
408
228
216a
216a
228
402
200
210"
302
300

FIG. 8B

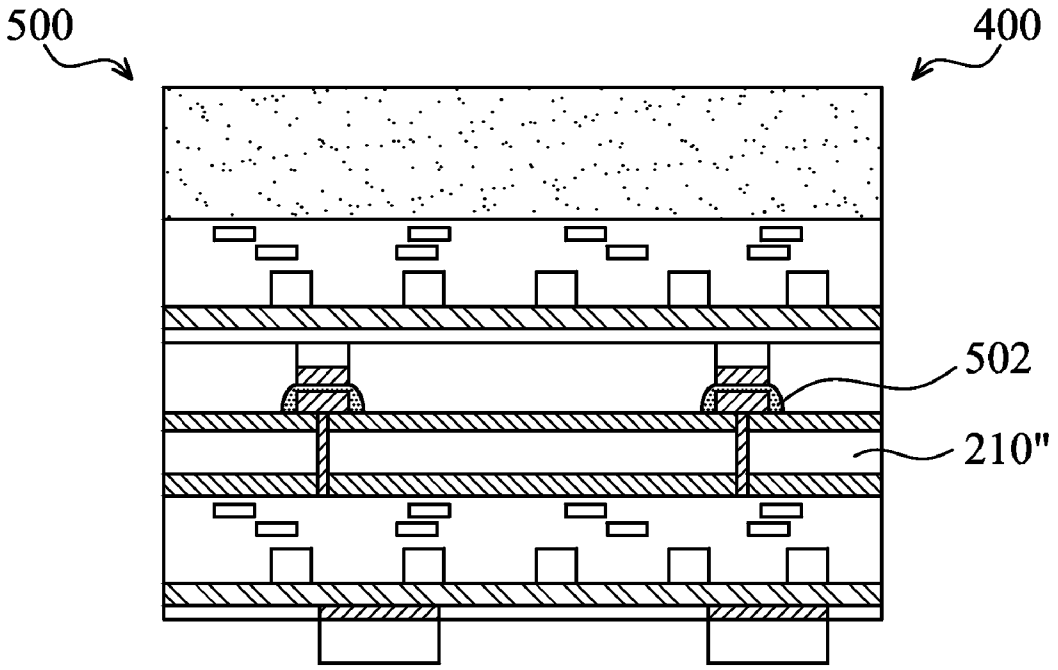

FIG. 8C

SEMICONDUCTOR DEVICE AND SEMICONDUCTOR ASSEMBLY WITH LEAD-FREE SOLDER

TECHNICAL FIELD

[0001] This disclosure relates to lead-free solder, and more particularly, to a semiconductor device and a semiconductor assembly using the lead-free solder.

BACKGROUND

[0002] Modern integrated circuits are made up of literally millions of active devices such as transistors and capacitors. These devices are initially isolated from each other, but are later interconnected together to form functional circuits. Typical interconnect structures include lateral interconnections, such as metal lines (wirings), and vertical interconnections, such as vias and contacts. Interconnections are increasingly determining the limits of performance and the density of modern integrated circuits. On top of the interconnect structures, bond pads are formed and exposed on the surface of the respective chip. Electrical connections are made through bond pads to connect the chip to a package substrate or another die. Bond pads can be used for wire bonding or flip-chip bonding. Wafer level chip scale packaging (WLCSP) is currently widely used for its low cost and relatively simple processes. In a typical WLCSP, interconnect structures are formed on metallization layers, followed by the formation of under-bump metallurgy (UBM), and the mounting of solder balls.

[0003] Flip-chip packaging utilizes bumps to establish electrical contact between a chip's I/O pads and the substrate or lead frame of the package. Structurally, a bump actually contains the bump itself and a so-called under bump metallurgy (UBM) located between the bump and an I/O pad. An UBM generally contains an adhesion layer, a barrier layer and a wetting layer, arranged in this order on the I/O pad. The bumps themselves, based on the material used, are classified as solder bumps, gold bumps, copper pillar bumps and bumps with mixed metals. Recently, copper interconnect post technology is proposed. Instead of using solder bump, the electronic component is connected to a substrate by means of copper post. The copper interconnect post technology achieves finer pitch with minimum probability of bump bridging, reduces the capacitance load for the circuits and allows the electronic component to perform at higher frequencies. A solder alloy is still necessary for capping the bump structure and jointing electronic components as well.

[0004] Usually, a material used for the solder alloy is so-called Sn—Pb eutectic solder of Sn-38 mass % Pb. In recent years, it is urged to put Pb-free solder to practical use. The binary Sn—Ag alloy is used as the lead-free solder with Ag between 2.0~4.5 weight percent, which melts at a temperature between 240~260° C. The reflow soldering process and equipment for lead-free components are similar to conventional eutectic solder. Many developments of solder alloys have been directed to make the composition of an alloy, as close as possible to the eutectic composition of that in order to use the eutectic point to avoid thermal damage. However, the melting point of a Pb-free solder material is higher than that of the conventional Sn—Pb eutectic solder, so that there arises problems of cracks and stress reliability issues as TCB testing, especially to large die size. Even applied to the Cu post technology, the flip-chip assembly using the Pb-free solder material as the cap still suffers the crack issue induced by die edge/substrate interface stress.

BRIEF DESCRIPTION OF THE DRAWINGS

[0005] The aforementioned objects, features and advantages of this disclosure will become apparent by referring to the following detailed description of the preferred embodiments with reference to the accompanying drawings, wherein:

[0006] FIG. **1** is a cross-sectional diagram depicting an exemplary embodiment of a semiconductor device with a lead-free solder on a copper post structure;

[0007] FIG. **2** is a diagram showing the relationship between the Ag content in lead-free solder and bump hardness;

[0008] FIG. **3**A and FIG. **3**B are cross-sectional diagrams depicting an exemplary embodiment of a package assembly with the lead-free solder;

[0009] FIG. **4** is a cross-sectional diagram depicting an exemplary embodiment of a Cu post structure on Cu PPI for WLCSP application;

[0010] FIG. **5** is a cross-sectional diagram depicting an exemplary embodiment of a solder bump structure;

[0011] FIG. **6** is a cross-sectional diagram depicting an exemplary embodiment of a package assembly with the solder bump structure;

[0012] FIG. **7** is a cross-sectional diagram depicting an exemplary embodiment of a solder bump structure on Cu PPI for WLCSP application; and

[0013] FIG. **8**A to FIG. **8**C are cross-sectional diagrams depicting an exemplary embodiment of manufacturing vertically stacked devices using the lead-free solder.

DETAILED DESCRIPTION OF ILLUSTRATIVE EMBODIMENTS

[0014] This disclosure provides a lead-free solder with controlled Ag content and reflow temperature used in semiconductor devices having Cu post, post passivation interconnects, solder bump, and/or through-silicon vias (TSVs) fabricated thereon, applied to flip-chip assembly, wafer-level chip scale package (WLCSP), three-dimensional integrated circuit (3D-IC) stack, and/or any advanced package technology fields. In the following description, numerous specific details are set forth to provide a thorough understanding of the disclosure. However, one having an ordinary skill in the art will recognize that the disclosure can be practiced without these specific details. In some instances, well-known structures and processes have not been described in detail to avoid unnecessarily obscuring the disclosure. Reference throughout this specification to "one embodiment" or "an embodiment" means that a particular feature, structure, or characteristic described in connection with the embodiment is included in at least one embodiment. Thus, the appearances of the phrases "in one embodiment" or "in an embodiment" in various places throughout this specification are not necessarily all referring to the same embodiment. Furthermore, the particular features, structures, or characteristics may be combined in any suitable manner in one or more embodiments. It should be appreciated that the following figures are not drawn to scale; rather, these figures are merely intended for illustration.

[0015] Herein, cross-sectional diagram of FIG. **1** depicts an exemplary embodiment of a semiconductor device with a lead-free solder on a copper post structure.

[0016] An example of a substrate **10** used for Cu post interconnection fabrication may comprise a semiconductor substrate as employed in a semiconductor integrated circuit fabrication, and integrated circuits may be formed therein and/or thereupon. The semiconductor substrate is defined to mean any construction comprising semiconductor materials, including, but is not limited to, bulk silicon, a semiconductor wafer, a silicon-on-insulator (SOI) substrate, or a silicon germanium substrate. Other semiconductor materials including group III, group IV, and group V elements may also be used. The integrated circuits as used herein refer to electronic circuits having multiple individual circuit elements, such as transistors, diodes, resistors, capacitors, inductors, and other active and passive semiconductor devices. The substrate **10** further includes inter-layer dielectric layers and a metallization structure overlying the integrated circuits. The inter-layer dielectric layers in the metallization structure include low-k dielectric materials, un-doped silicate glass (USG), silicon nitride, silicon oxynitride, or other commonly used materials. The dielectric constants (k value) of the low-k dielectric materials may be less than about 3.9, or less than about 2.8. Metal lines in the metallization structure may be formed of copper or copper alloys. One skilled in the art will realize the formation details of the metallization layers.

[0017] A conductive region **12** is a top metallization layer formed in a top-level inter-layer dielectric layer, which is a portion of conductive routs and has an exposed surface treated by a planarization process, such as chemical mechanical polishing (CMP), if necessary. Suitable materials for the conductive region **12** may include, but are not limited to, for example copper, aluminum, copper alloy, or other mobile conductive materials. In one embodiment, the conductive region **12** is a pad region **12**, which may be used in the bonding process to connect the integrated circuits in the respective chip to external features.

[0018] A passivation layer **14** is formed and patterned on the substrate **10** to partially cover the pad region **12**. The passivation layer **14** has an opening **15** exposing a portion of the pad region **12**. The passivation layer **14** may be formed of a non-organic material selected from un-doped silicate glass (USG), silicon nitride, silicon oxynitride, silicon oxide, and combinations thereof. Alternatively, the passivation layer **14** may be formed of a polymer layer, such as an epoxy, polyimide, benzocyclobutene (BCB), polybenzoxazole (PBO), and the like, although other relatively soft, often organic, dielectric materials may also be used.

[0019] An under-bump-metallurgy (UBM) layer **16** including a diffusion barrier layer **16***a* and a seed layer **16***b* is formed on a portion of the passivation layer **14** and electrically connected to the pad region **12** through the opening **15**. As depicted, the UBM layer **28** directly contacts the exposed portion of the pad region **12** and lines the sidewalls and bottom of the opening **15**. The diffusion barrier layer **16***a*, also referred to as a glue layer, is formed to cover the sidewalls and the bottom of the opening **15**. The diffusion barrier layer **16***a* may be formed of tantalum nitride, although it may also be formed of other materials such as titanium nitride, tantalum, titanium, or the like. The formation methods include physical vapor deposition (PVD) or sputtering. The seed layer **16***b* may be a copper seed layer formed on the diffusion barrier layer **16***a*. The seed layer **16***b* may be formed of copper alloys that include silver, chromium, nickel, tin, gold, and combinations thereof. In one embodiment, the UBM layer **16** is a Cu/Ti layer.

[0020] A copper (Cu) post **18** is formed on the UBM layer **16**. As used throughout this disclosure, the term "copper (Cu) post" is intended to include substantially a post including pure elemental copper, copper containing unavoidable impurities, and copper alloys containing minor amounts of elements such as tantalum, indium, tin, zinc, manganese, chromium, titanium, germanium, strontium, platinum, magnesium, aluminum or zirconium. The formation methods may include sputtering, printing, electro plating, electroless plating, and commonly used chemical vapor deposition (CVD) methods. For example, electro-chemical plating (ECP) is carried out to form the Cu post with a thickness greater than 40 um. In other embodiments, the thickness of the Cu post is about 40~70 μm, although the thickness may be greater or smaller.

[0021] A cap layer **20** is formed on the top surface of the Cu post **18**. The cap layer **20** could act as a barrier layer to prevent copper in the Cu post **18** to diffuse into bonding material, such as solder alloy, that is used to bond the substrate **10** to external features. The prevention of copper diffusion increases the reliability and bonding strength of the package. The cap layer **20** may include nickel, tin, tin-lead (SnPb), gold (Au), silver, palladium (Pd), In, nickel-palladium-gold (NiPdAu), nickel-gold (NiAu), other similar materials, or alloy. In one embodiment, the cap layer **20** is a nickel layer with a thickness about 1~5 um.

[0022] A lead-free (Pb-free) solder layer **22** is formed on the cap layer **20**. Thus the lead-free solder layer **22**, the cap layer **20**, and the Co post **18** are referred to as a bump structure **25** formed over the pad region **12**. The lead-free (Pb-free) solder layer **22** may be formed by plating and reflowing processes. In one embodiment, the lead-free solder layer **22** is formed as solder ball on the cap layer **20**. In other embodiment, the lead-free solder layer **22** is a plated solder layer on the cap layer **20**. For a lead-free solder system, the solder layer **22** is SnAg with Ag content being controlled lower than 1.6 weight percent (wt %). In the reflow process, the melting temperature of the lead-free solder layer **22** is accordingly adjusted to the range of between about 240° C. to about 280° C. In one embodiment, the Ag content in the lead-free solder layer **22** is at the range between about 1.2 wt % to about 1.6 wt %. In other embodiment, the Ag content in the lead-free solder layer **22** is about 1.5 wt %. Reliability of package using lead-free solder alloy relates to several factors, including bump hardness and formation of intermetallic compounds (IMCs) and voids, which may potentially contribute to crack formation and cause thermo-mechanical stresses on the solder joint. It is observed that the bump becomes softer as the Ag content in the lead-free solder is lower as schematically shown in FIG. **2**. The softer bump may eliminate the crack issue caused by thermal stress. The SEM study shows that the lead-free solder with lower Ag content provides better performance for crack resistance. On the contrary, as the Ag content in the lead-free solder is higher, the formation of IMCs, voids, and induced cracks will be observed at time zero. However, if the Ag content of the lead-free solder is lower than 1.2 wt %, only a part of the solder bump transfers the state from melting to solid when the temperature is lower than the melting point during the cooling step of reflow process, which makes thermal stress gathering at those bumps to cause cracks. As to the reflowing temperature of the lead-free solder layer **22** in the reflow process, it is adjusted at the range

between about 240° C. to about 280° C. to avoid an uncompleted ball-shape formation and suppress the voids and IMCs formation.

[0023] FIG. **3**A and FIG. **3**B are cross-sectional diagrams depicting an exemplary embodiment of a package assembly with the lead-free solder.

[0024] The substrate **10** may then be sawed and packaged onto a package substrate, or another die, with solder balls or Cu posts mounted on a pad on the package substrate or the other die. The structure shown in FIG. **1** is flipped upside down and attached to another substrate **100** at the bottom. The substrate **100** may be a package substrate, board (e.g., a print circuit board (PCB)), or other suitable substrate. The connection structure **102** contacts the substrate **100** at various conductive attachment points, for example, a pre-solder layer **106** on contact pads **104** and/or conductive traces. The pre-solder layer **106** may be a eutectic solder material including alloys of tin, lead, silver, copper, nickel, bismuth, or combinations thereof. Using an exemplary coupling process including a flux application, chip placement, reflowing of melting solder joints, and cleaning of flux residue, a joint-solder structure **108** is formed between the substrates **10** and **100**. After the assembly process, the joint-solder layer **108** includes the lead-free solder mixed with the pre-solder, in which the Ag content in the joint-solder layer **108** is lower than 3.0 wt %. The substrate **10**, the joint-solder layer **108**, and the other substrate **100** may be referred to as a packaging assembly, or in the present embodiment, a flip-chip assembly.

[0025] FIG. **4** is a cross-sectional diagram depicting an exemplary embodiment of a Cu post structure on Cu PPI for WLCSP application, while explanation of the same or similar portions to the description in FIG. **1** to FIG. **3** will be omitted.

[0026] Compared with the Cu post **18** and the UBM layer **16** formed over the pad region **12** as depicted in FIG. **1**, the WLCSP process forms a post passivation interconnect (PPI) line **26** underlying the UBM layer **16** and the passivation layer **14** and overlying another passivation layer **24**. One end of the PPI line **26** is electrically connected to the pad region **12** (not shown in FIG. **4**), and the other end of the PPI line **26** is electrically connected to the UBM layer **16** and the Cu post **18**. In one embodiment, one portion of the PPI line **26** is exposed by the passivation layer **14**, on which the UBM layer **16** is directly formed. The passivation layer **24** may be formed of a non-organic material selected from un-doped silicate glass (USG), silicon nitride, silicon oxynitride, silicon oxide, and combinations thereof. Alternatively, the passivation layer **24** may be formed of a polymer layer, such as an epoxy, polyimide, benzocyclobutene (BCB), polybenzoxazole (PBO), and the like, although other relatively soft, often organic, dielectric materials may also be used. The PPI line **26** may include, but not limited to, for example copper, aluminum, copper alloy, or other mobile conductive materials. The PPI line **26** may further include a nickel-containing layer (not shown) on the top a copper-containing layer. The PPI formation methods include plating, electroless plating, sputtering, chemical vapor deposition methods, and the like. The PPI line **26** may also function as power lines, re-distribution lines (RDL), inductors, capacitors or any passive components. The PPI line **26** may have a thickness less than about 30 μm, for example between about 2 μm and about 25 μm.

[0027] FIG. **5** is a cross-sectional diagram depicting an exemplary embodiment of a solder bump structure, while explanation of the same or similar portions to the description in FIG. **1** to FIG. **1** will be omitted.

[0028] Compared with the structure as depicted in FIG. **1**, the formation of the Cu post **18** is replaced by a thin copper (Cu) layer **18***a* in the solder bump process followed by the formation of the cap layer **20***a* and the lead-free solder layer **22***a*. The thin Cu layer **18***a* has a thickness relatively thinner than the Cu post **18**. The thin Cu layer **18***a* has a thickness less than 10 um. In an embodiment, the thin Cu layer **18***a* has a thickness about 1~10 um, for example about 4~6 um, although the thickness may be greater or smaller. The thin Cu layer formation methods may include sputtering, printing, electro plating, electroless plating, and commonly used chemical vapor deposition (CVD) methods. The lead-free (Pb-free) solder layer **22***a* is reflowed as a solder ball. Therefore, the lead-free solder layer **22***a*, the cap layer **20***a* and the copper layer **18***a* are referred to as a solder bump structure **25***a*. The solder layer **22***a* is SnAg with Ag content being controlled lower than 1.6 weight percent (wt %), which is melted at the range of between about 240° C. to about 280° C. In one embodiment, the Ag content in the lead-free solder layer **22***a* is at the range between about 1.2 wt % to about 1.6 wt %. In other embodiment, the Ag content in the lead-free solder layer **22***a* is about 1.5 wt %.

[0029] FIG. **6** is a cross-sectional diagram depicting an exemplary embodiment of a package assembly with the semiconductor device shown in FIG. **5**, while explanation of the same or similar portions to the description in FIG. **1** to FIG. **3** will be omitted. After the assembly process, the substrate **10**, the joint-solder layer **108**, and the other substrate **100** may be referred to as a packaging assembly, or in the present embodiment, a flip-chip assembly. The joint-solder layer **108** includes the lead-free solder mixed with the pre-solder, in which the Ag content in the joint-solder layer **108** is lower than 3.0 wt %.

[0030] FIG. **7** is a cross-sectional diagram depicting an exemplary embodiment of a solder bump structure on Cu PPI for WLCSP application, while explanation of the same or similar portions to the description in FIG. **1** to FIG. **6** will be omitted. Compared with the solder bump structure as depicted in FIG. **5**, the WLCSP process forms a post passivation interconnect (PPI) line **26** underlying the UBM layer **16** and the passivation layer **14** and overlying another passivation layer **24**. One end of the PPI line **26** is electrically connected to the pad region **12** (not shown in FIG. **7**), and the other end of the PPI line **26** is electrically connected to the UBM layer **16**. In one embodiment, one portion of the PPI line **26** is exposed by the passivation layer **14**, on which the UBM layer **16** is directly formed.

[0031] FIG. **8**A to FIG. **8**C are cross-sectional diagrams depicting an exemplary embodiment of manufacturing vertically stacked devices using the lead-free solder. Three-dimensional (3D) wafer-to-wafer, die-to-wafer or die-to-die vertical stack technology seeks to achieve the long-awaited goal of vertically stacking many layers of active IC devices such as processors, programmable devices and memory devices to shorten average wire lengths, thereby reducing interconnect RC delay and increasing system performance. One major challenge of 3D interconnects on a single wafer or in a die-to-wafer vertical stack is through-silicon via (TSV) that provides a signal path for high impedance signals to traverse from one side of the wafer to the other. Through-silicon via (TSV) is typically fabricated to provide the through-silicon via filled with a conducting material that passes completely through the layer to contact and connect with the other TSVs and conductors of the bonded layers.

[0032] Referring to FIG. **8**A, a wafer **200**, which includes a substrate **210**, is provided. An example of a substrate **210** may include a semiconductor substrate as employed in a semiconductor integrated circuit fabrication, and integrated circuits may be formed therein and/or thereupon. The substrate **210** has a first surface **210***a* and a second surface **210***b* opposite to the first surface **210***a*. The first surface **210***a* may be referred to as the frontside on which integrated circuits including active and passive devices such as transistors, resistors, capacitors, diodes, inductors and the like, are formed to connect bond pads and/or other interconnection structures. The circuitry may be any type of circuitry suitable for a particular application. The functions may include memory structures, processing structures, sensors, amplifiers, power distribution, input/output circuitry, or the like. The second surface **210***b* may be referred to as the backside, which will be thinned down and processed to form bond pads and/or other interconnection structures thereon.

[0033] A first dielectric layer **214** is formed on the first surface **10***a,* in which contacts are formed to electrically connect the devices respectively. Generally, the first dielectric layer **214** may be formed, for example, of a low-K dielectric material, silicon oxide, phosphosilicate glass (PSG), borophosphosilicate glass (BPSG), fluorinated silicate glass (FSG), or the like, by any suitable method known in the art. Other materials and processes may be used.

[0034] A plurality of through vias **216** passes through at least a part of the substrate **210**. The through via **216** is a conductor-filled plug extending from the first surface **210***a* toward the second surface **10***b* and reaching an intended depth. Also, an isolation layer is formed on the sidewalls and bottom of the though via **216**, and insulates the though via **216** from the substrate **210**. The through vias **16** may be formed of any suitable conductive material, but are preferably formed of a highly-conductive, low-resistive metal, elemental metal, transition metal, or the like. In an embodiment, the though via **216** is a trench filled with a conductive layer formed of Cu, W, Cu alloy, or the like. A conductive barrier layer formed of Ti, TiN, Ta, TaN or combinations thereof may be formed in the trench surrounding the conductive layer. The isolation layer may be formed of commonly used dielectric materials such as silicon nitride, silicon oxide (for example, tetra-ethyl-orthosilicate (TEOS) oxide), and the like.

[0035] A first interconnect structure **218**, which includes inter-layer dielectric layers and a metallization structure are formed overlying the integrated circuits, the first dielectric layer **214** and the through vias **216**. The inter-layer dielectric layers in the metallization structure include low-k dielectric materials, un-doped silicate glass (USG), silicon nitride, silicon oxynitride, or other commonly used materials. The dielectric constants (k value) of the low-k dielectric materials may be less than about **3**.9, or less than about 2.8. The metallization structure includes metal lines and vias, which may be formed of copper or copper alloys, and may be formed using the well-known damascene processes. One skilled in the art will realize the formation details of the metallization layers.

[0036] A passivation layer **220** is formed over first interconnect structure **218**. The passivation layer **220** may be formed of materials such as silicon oxide, silicon nitride, un-doped silicate glass (USG), polyimide, and/or multi-layers thereof. A metal pad **222** is formed on the passivation layer **220**. The metal pad **222** may be formed of aluminum, copper, silver, gold, nickel, tungsten, alloys thereof, and/or multi-layers thereof. The metal pad may be electrically connected to the devices and the through via **216**, for example, through underlying first interconnection structure **218**. A dielectric buffer layer **224** is formed on the metal pad and patterned to provide a bump formation window. The dielectric buffer layer **224** may be formed of a polymer, such as an epoxy, polyimide, benzocyclobutene (BCB), polybenzoxazole (PBO), and the like, although other relatively soft, often organic, dielectric materials can also be used. A bump structure **226** is then formed overlying and electrically connected to the metal pad **222**. The bump structure **224** refers to the structures **25** and **25***a* shown in FIGS. **1**, **4**,**5** and **7**. The details are thus not repeated herein.

[0037] Referring to FIG. **8**B, the wafer **200** is attached to a carrier **300** through an adhesive layer **302** and then the bonded structure is flipped. Since the bonded structure is flipped, a thinning process e.g., grinding and/or etching is then performed on the second surface **210***b* to remove the most portion of the substrate **210** to the desired final thickness, resulting in a thinned substrate **210"** with a predetermined thickness depending on the purpose for which the semiconductor package is used. One of ordinary skill in the art will realize that other thinning processes, such as a polish process (including a wet polish (CMP) and a dry polish), a plasma etch process, a wet etch process, or the like, may also be used. In an embodiment, the end **216***a* of the through via **216** is exposed and/or protruded from the second surface **210***b***"** of the thinned substrate **210"** after the thinning process. Then, processing of the second surface **210***b***"** of the thinned substrate **210"** is performed to form a second interconnect structure **228** electrically connected to the through via **216**. For an example, the second interconnect structure **228** includes electrical connections and/or other structures (e.g., redistribution layers, pads, solder bumps or copper bumps) are formed over the surface **210***b***"** of the thinned wafer **210"**. The details of the backside grinding and the interconnect structure formation is provided in the co-pending U.S. patent applications: application Ser. No. 12/332,934, entitled "Backside Connection to TSVs Having Redistribution Lines;" and application Ser. No. 12/347,742, entitled "Bond Pad Connection to Redistribution Lines Having Tapered Profiles;" which applications are hereby incorporated herein by reference. The details are thus not repeated herein.

[0038] Next, dies **400** are provided for being bonded onto the thinned wafer **210"**. The dies **400** may be memory chips, RF (radio frequency) chips, logic chips, or other chips. Each die **400** includes a bump structure **402** used for electrically connected to the second interconnect structure **228** of the thinned wafer **210"**. The bump structure **402** includes a copper layer **404**, an optional cap layer **406** on the top of the copper layer **404**, and a lead-free solder layer **408** over the copper layer **404**. The copper layer **404** may be a thin copper layer of about 0.5~10 um thickness or a thick copper layer of about 40~70 μm thickness. The optional cap layer **406** may include nickel, gold (Au), silver, palladium (Pd), indium (In), nickel-palladium-gold (NiPdAu), nickel-gold (NiAu) or other similar materials or alloy. The lead-free solder layer **408** may be a plated layer or reflowed as a solder ball. The solder layer **408** is SnAg with Ag content being controlled lower than 1.6 weight percent (wt %). In the reflow process, the melting temperature of the lead-free solder layer **408** is accordingly adjusted to the range of between about 240° C. to about 280° C. In one embodiment, the Ag content in the lead-free solder layer **408** is at the range between about 1.2 wt

% to about 1.6 wt %. In other embodiment, the Ag content in the lead-free solder layer **408** is about 1.5 wt %.

[0039] Referring to FIG. **8**C, the dies **400** are bonded onto the thinned wafer **210"** through the bump structures **402** and the second interconnect structure **228**, forming a dies-to-wafer stack **500**. Using an exemplary coupling process including a flux application, chip placement, reflowing of melting solder joints, and cleaning of flux residue, joint structures **502** are formed between the wafer **210"** and the dies **400**. The joint structure **502** includes the bump structure **402**, the second interconnect structure **228**, and the lead-free solder layer **408** joined therebetween. Thereafter, the carrier **300** is detached from the thinned wafer **210"**, and then dies-to-wafer stack **500** is sawed in the usual manner along cutting lines to separate the dies-to-wafer stack into individual IC stacks, and then packaged on to a package substrate with solder bumps or Cu bumps mounted on a pad on the package substrate. In some embodiments, the package substrate is replaced by another die.

[0040] In the preceding detailed description, the disclosure is described with reference to specifically exemplary embodiments thereof. It will, however, be evident that various modifications, structures, processes, and changes may be made thereto without departing from the broader spirit and scope of the disclosure, as set forth in the claims. The specification and drawings are, accordingly, to be regarded as illustrative and not restrictive. It is understood that the disclosure is capable of using various other combinations and environments and is capable of changes or modifications within the scope of the inventive concept as expressed herein.

What is claimed is:

1. A semiconductor device, comprising:

a semiconductor substrate;

a pad region on the semiconductor substrate; and

a bump structure overlying and electrically connected to the pad region;

wherein the bump structure comprises a copper layer and a SnAg layer overlying the copper layer, and the Ag content in the SnAg layer is less than 1.6 weight percent.

2. The semiconductor device of claim **1**, wherein the Ag content in the SnAg layer is greater than 1.2 weight percent.

3. The semiconductor device of claim **1**, wherein the Ag content in the SnAg layer is 1.5 weight percent.

4. The semiconductor device of claim **1**, wherein the copper layer is a copper post with a thickness greater than 40 um.

5. The semiconductor device of claim **1**, wherein the copper layer has a thickness less than 10 um.

6. The semiconductor device of claim **1**, further comprising a nickel layer between the copper layer and the SnAg layer.

7. The semiconductor device of claim **1**, further comprising an under-bump metallization (UBM) layer between the bump structure and the pad region.

8. The semiconductor device of claim **1**, further comprising a through via passing through the semiconductor substrate and electrically connected to the pad region.

9. The semiconductor device of claim **1**, wherein the through via comprises copper.

10. The semiconductor device of claim **1**, further comprising an interconnect line between the bump structure and the pad region.

11. A semiconductor assembly comprising:

a first substrate;

a second substrate; and

a joint structure disposed between the first substrate and the second substrate;

wherein the joint structure comprises a bump structure between the first substrate and the second substrate and a solder layer between the bump structure and the second substrate; and

wherein the solder layer comprises silver (Ag), and the Ag content in the solder layer is less than 3.0 weight percent.

12. The semiconductor assembly of claim **11**, wherein the bump structure comprises a copper post with a thickness greater than 40 um.

13. The semiconductor assembly of claim **12**, wherein the bump structure comprises a nickel-containing layer on the copper post.

14. The semiconductor assembly of claim **11**, wherein the bump structure comprises has a copper layer with a thickness less than 10 um.

15. The semiconductor assembly of claim **14**, wherein the bump structure comprises a nickel-containing layer on the copper layer.

16. The semiconductor assembly of claim **11**, wherein at least one of the first substrate and the second substrate is a semiconductor substrate comprising a through via passing through the semiconductor substrate and electrically connected to the bump structure.

17. The semiconductor assembly of claim **11**, wherein each of the first substrate and the second substrate is a semiconductor substrate.

18. A method of forming a semiconductor device, comprising:

providing a semiconductor substrate;

forming a pad region overlying the semiconductor substrate;

forming a copper post over the pad region;

forming a lead-free solder layer over the copper post, wherein the lead-free solder layer comprises silver (Ag) and the Ag content in the lead-free solder layer is less than 1.6 weight percent; and

reflowing the lead-free solder layer at the temperature between 240° C. to 280° C.

19. The method of claim **18**, wherein reflowing the lead-free solder layer is at the temperature between 240° C. to 280° C.

20. The method of claim **18**, wherein the Ag content in the lead-free solder layer is greater than 1.2 weight percent.

* * * * *