US008138014B2

(12) **United States Patent**
Chi et al.

(10) **Patent No.: US 8,138,014 B2**
(45) **Date of Patent: Mar. 20, 2012**

(54) **METHOD OF FORMING THIN PROFILE WLCSP WITH VERTICAL INTERCONNECT OVER PACKAGE FOOTPRINT**

(75) Inventors: **HeeJo Chi**, Kyoungki-do (KR); **NamJu Cho**, Gyeonggi-do (KR); **HanGil Shin**, Gyeonggi-do (KR)

(73) Assignee: **STATS ChipPAC, Ltd.**, Singapore (SG)

(*) Notice: Subject to any disclaimer, the term of this patent is extended or adjusted under 35 U.S.C. 154(b) by 205 days.

(21) Appl. No.: **12/696,923**

(22) Filed: **Jan. 29, 2010**

(65) **Prior Publication Data**

US 2011/0186977 A1 Aug. 4, 2011

(51) **Int. Cl.**
H01L 21/44 (2006.01)

(52) **U.S. Cl.** **438/106**; 438/107; 438/108; 438/113; 257/E21.499

(58) **Field of Classification Search** 438/106–114
See application file for complete search history.

(56) **References Cited**

U.S. PATENT DOCUMENTS

5,250,843	A	10/1993	Eichelberger	
5,353,498	A	10/1994	Fillion et al.	
5,811,879	A *	9/1998	Akram	257/723
5,841,193	A	11/1998	Eichelberger	
6,204,562	B1	3/2001	Ho et al.	
6,607,970	B1	8/2003	Wakabayashi	
6,958,537	B2	10/2005	Eng et al.	
6,960,826	B2	11/2005	Ho et al.	
7,084,513	B2	8/2006	Matsuki et al.	
7,221,059	B2	5/2007	Farnworth et al.	
7,335,994	B2	2/2008	Klein et al.	
7,439,098	B2 *	10/2008	Yang et al.	438/106
7,614,888	B2 *	11/2009	Tong et al.	439/108
7,619,901	B2	11/2009	Eichelberger et al.	
2004/0214373	A1 *	10/2004	Jiang et al.	438/110
2005/0029644	A1 *	2/2005	Ho et al.	257/686
2006/0128069	A1 *	6/2006	Hsu	438/124
2007/0108580	A1	5/2007	Goller	
2010/0233831	A1 *	9/2010	Pohl et al.	438/15
2010/0320585	A1 *	12/2010	Jiang et al.	257/686
2011/0147911	A1 *	6/2011	Kohl et al.	257/686

* cited by examiner

Primary Examiner — Thanh Nguyen
(74) *Attorney, Agent, or Firm* — Robert D. Atkins; Patent Law Group: Atkins & Associates, P.C.

(57) **ABSTRACT**

A semiconductor wafer has a plurality of first semiconductor die. A second semiconductor die is mounted to the first semiconductor die. The active surface of the first semiconductor die is oriented toward an active surface of the second semiconductor die. An encapsulant is deposited over the first and second semiconductor die. A portion of a back surface of the second semiconductor die opposite the active surface is removed. Conductive pillars are formed around the second semiconductor die. TSVs can be formed through the first semiconductor die. An interconnect structure is formed over the back surface of the second semiconductor die, encapsulant, and conductive pillars. The interconnect structure is electrically connected to the conductive pillars. A portion of a back surface of the first semiconductor die opposite the active surface is removed. A heat sink or shielding layer can be formed over the back surface of the first semiconductor die.

20 Claims, 14 Drawing Sheets

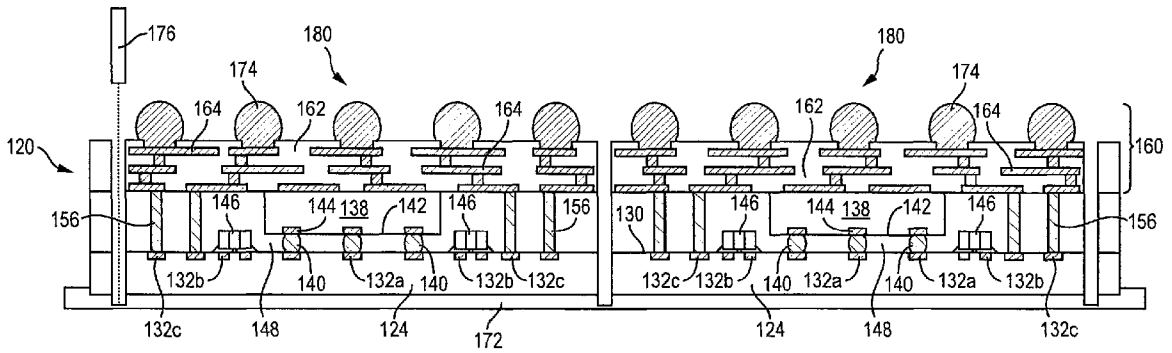

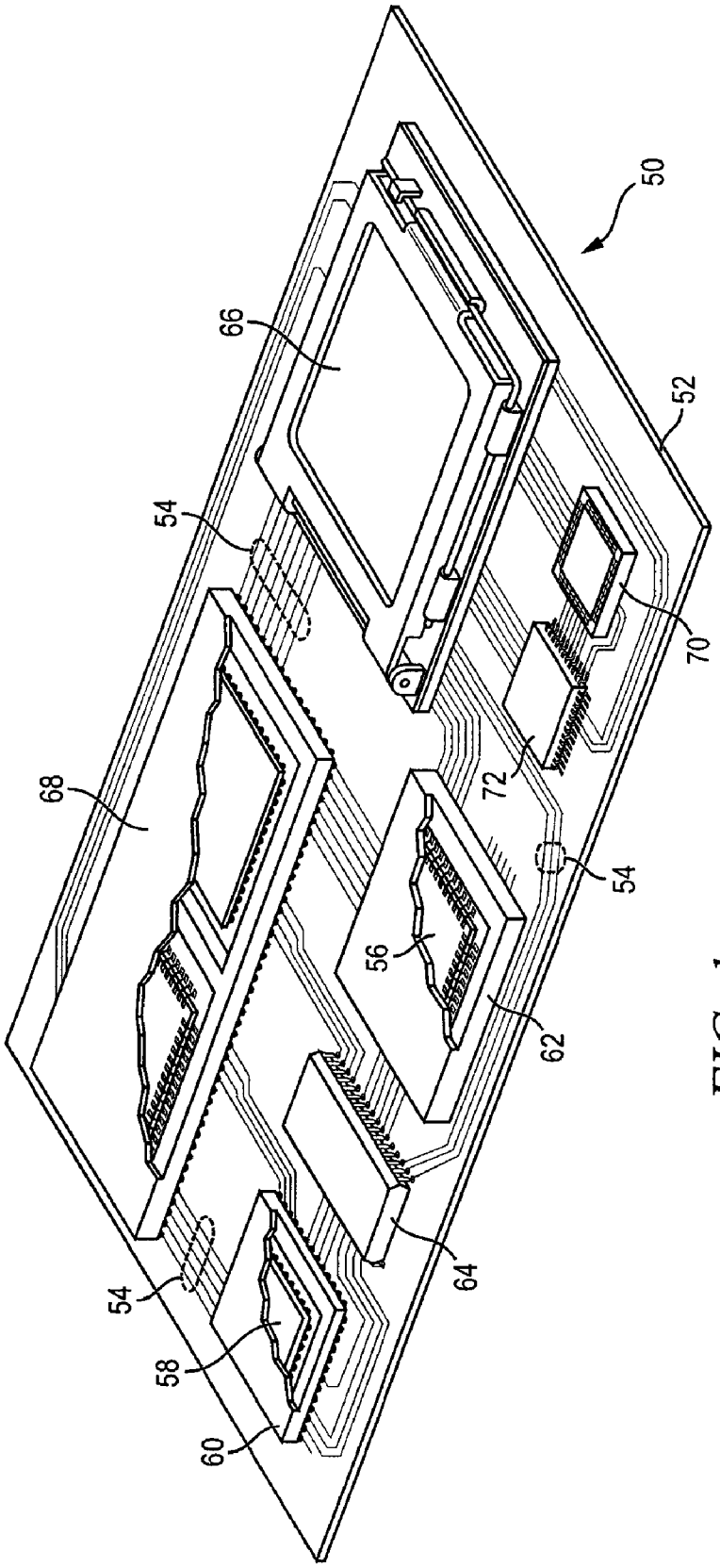

FIG. 1

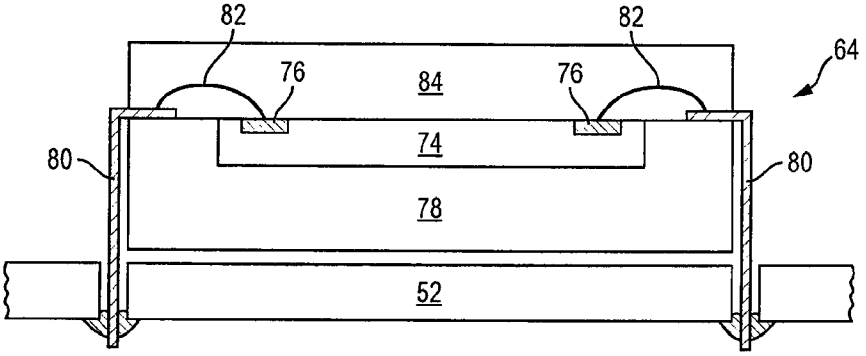

FIG. 2a

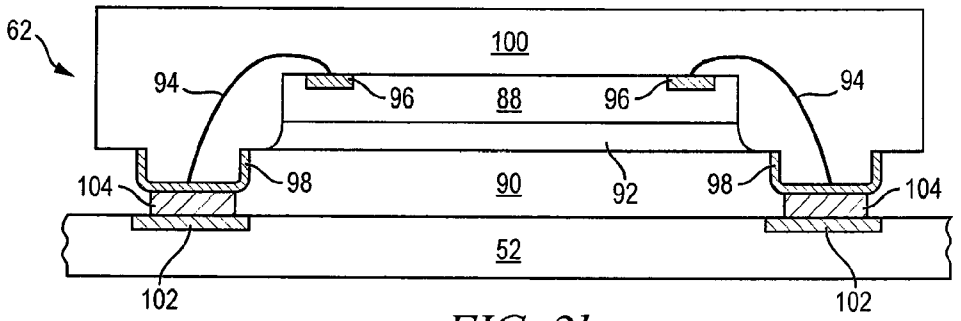

FIG. 2b

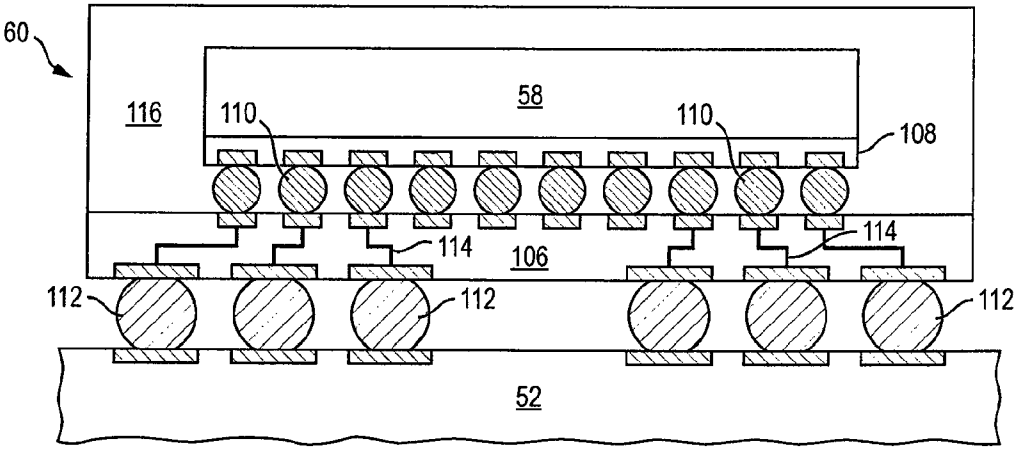

FIG. 2c

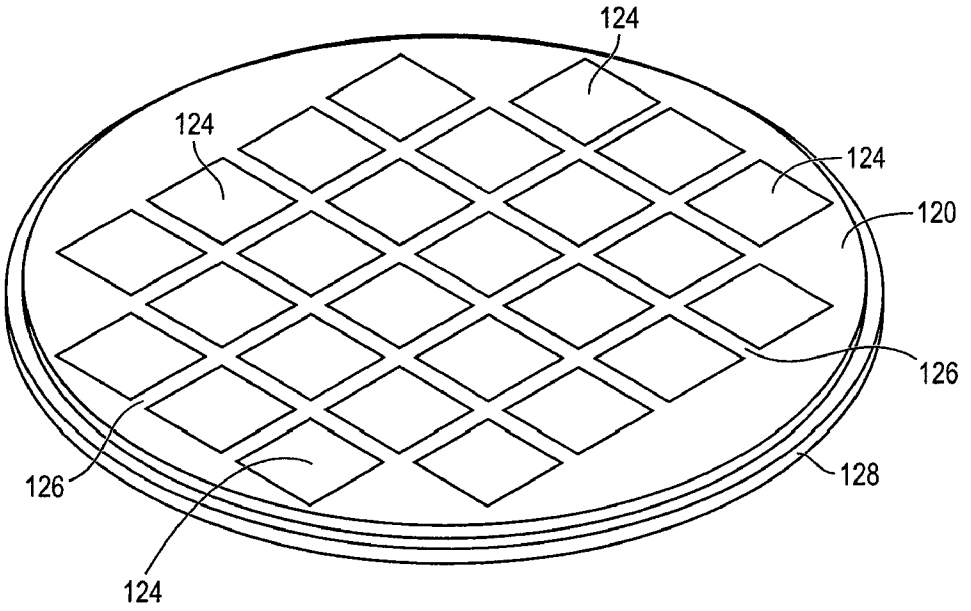

FIG. 3a

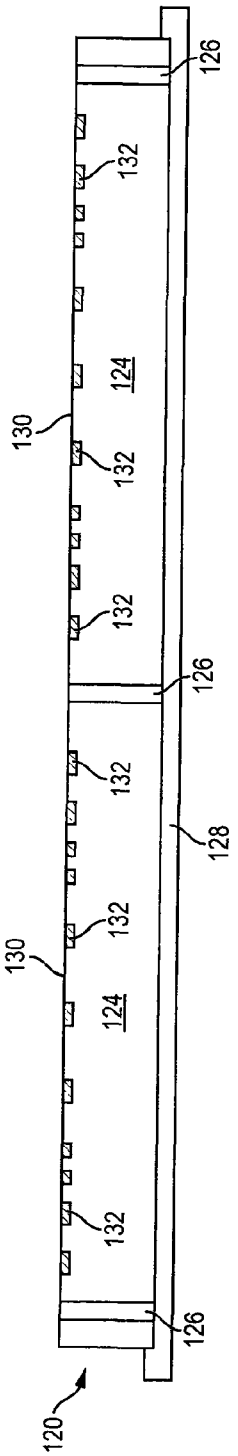

FIG. 3b

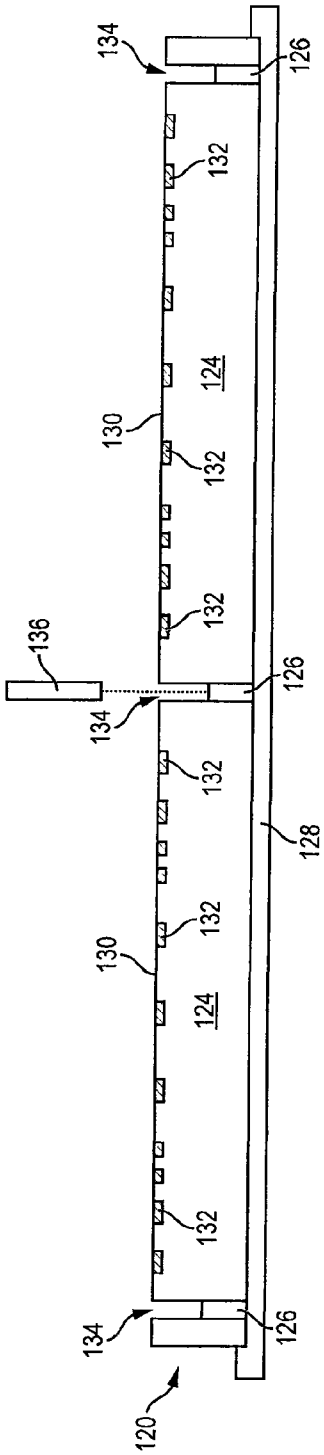

FIG. 3c

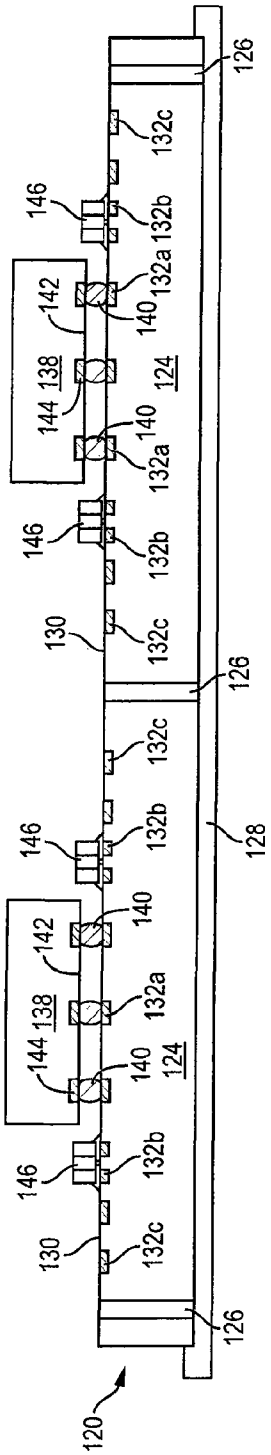

FIG. 3d

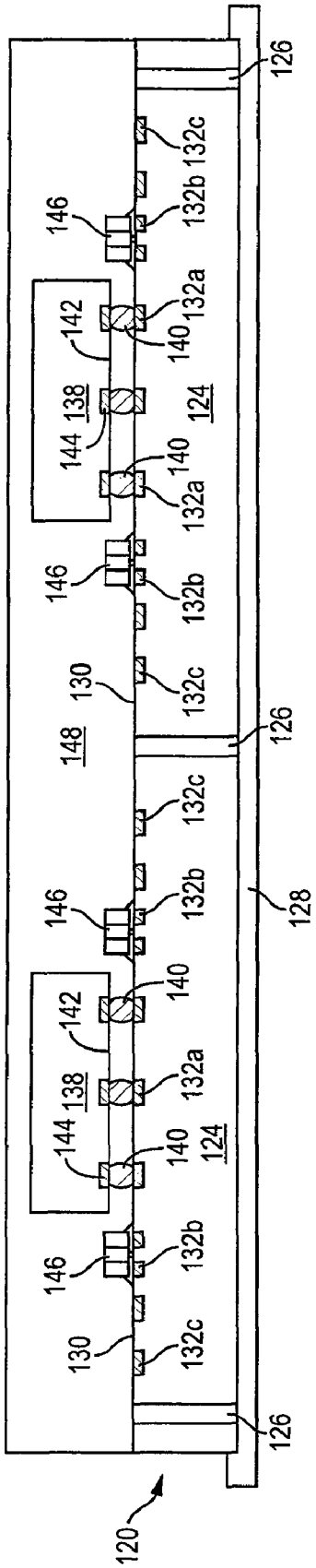
120
126
128
130
132a
132b
132c
138
140
142
144
146
148
124

FIG. 3e

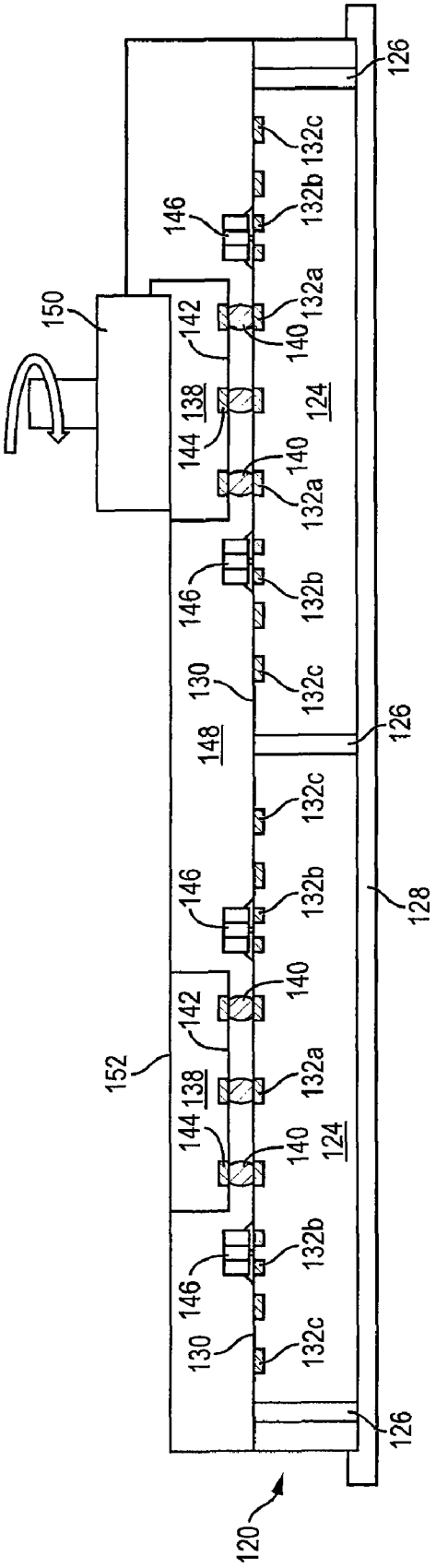
120
126
128
130
132a
132b
132c
138
140
142
144
146
148
150
152
124

FIG. 3f

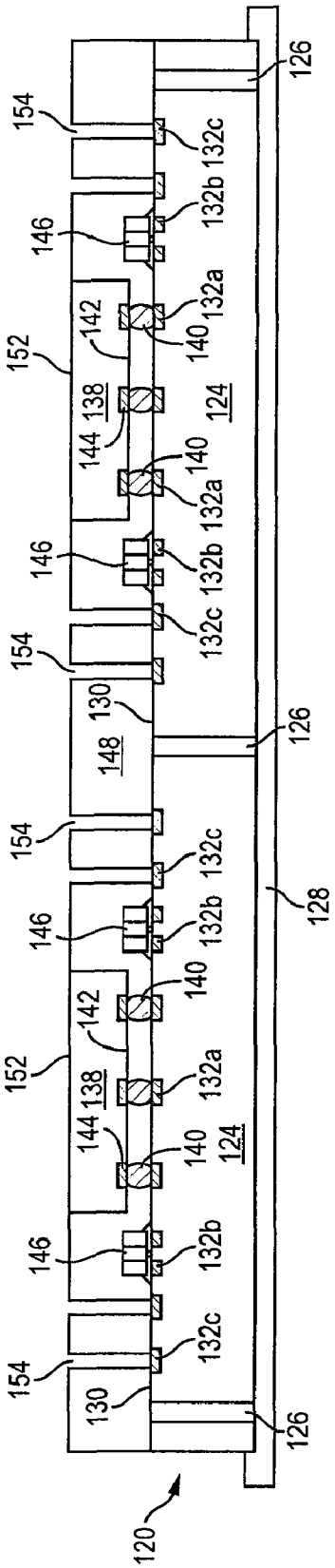
120
126
128
124
130
132a
132b
132c
138
140
142
144
146
148
152
154

FIG. 3g

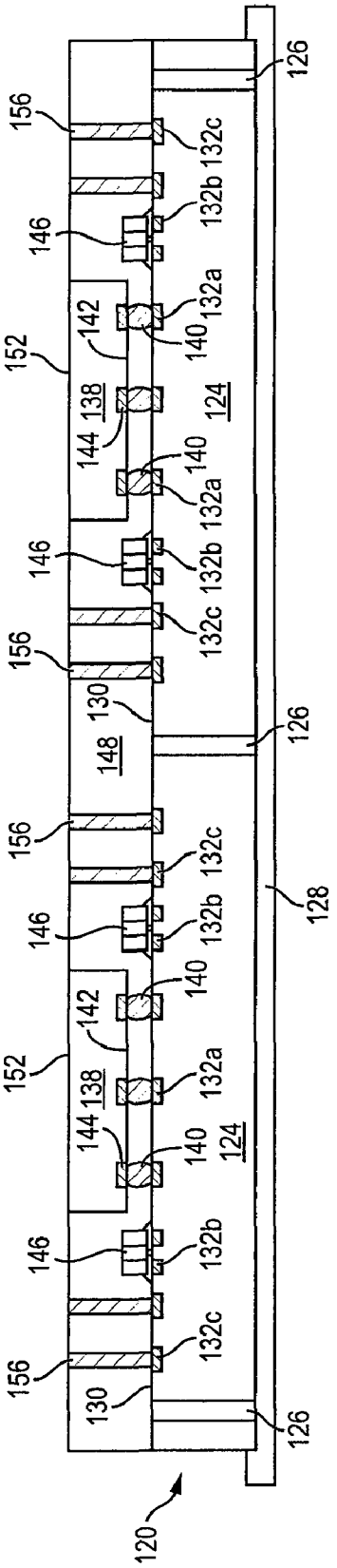
120
126
128
124
130
132a
132b
132c
138
140
142
144
146
148
152
156

FIG. 3h

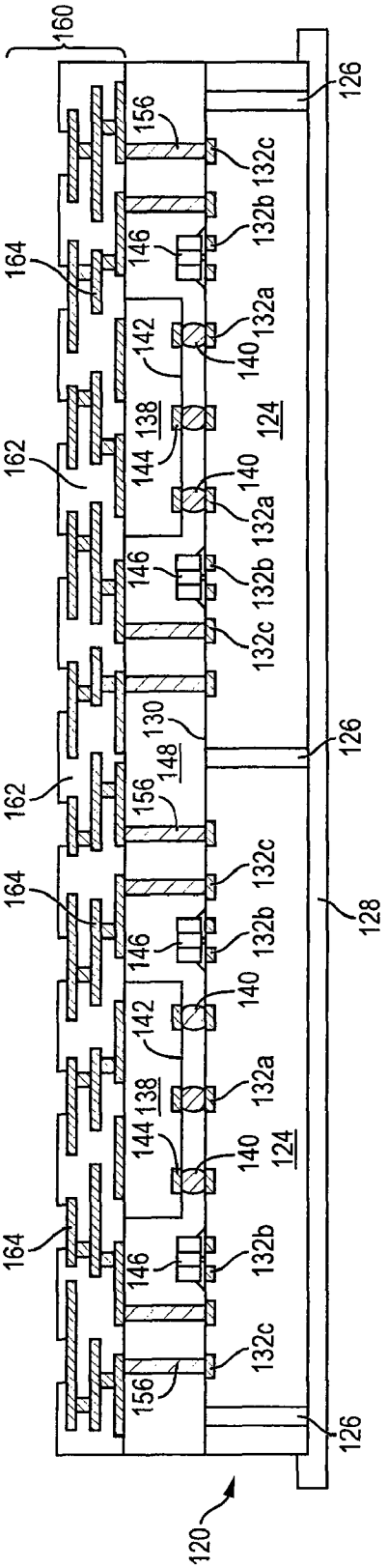
160
126
156
132c
132b
146
164
132a
142
140
138
144
124
162
148
130
128
120

FIG. 3i

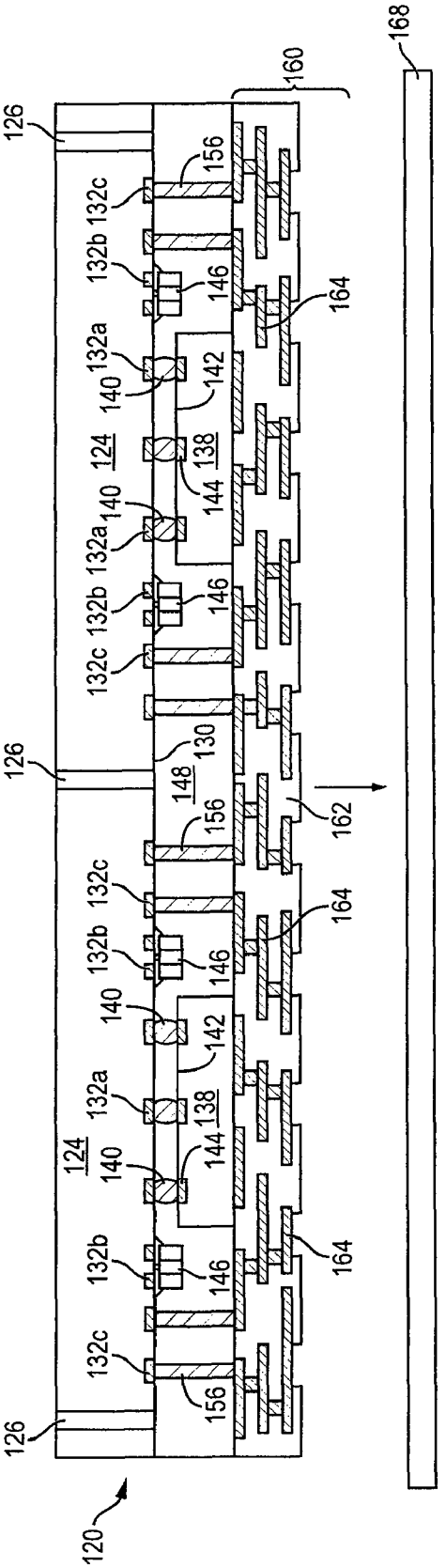
168
160
126
156
132c
132b
146
164
132a
142
140
138
144
124
148
130
162
120

FIG. 3j

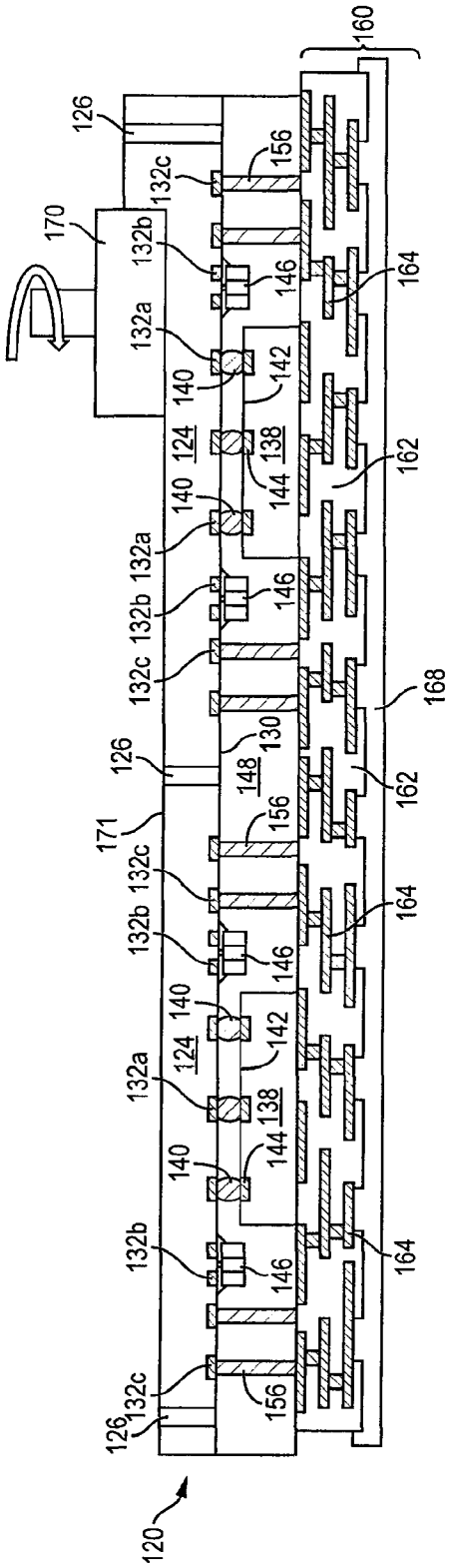
160
126
170
132c
156
132b
146
164
132a
140
142
124
138
144
162
168
130
148
171
120

FIG. 3k

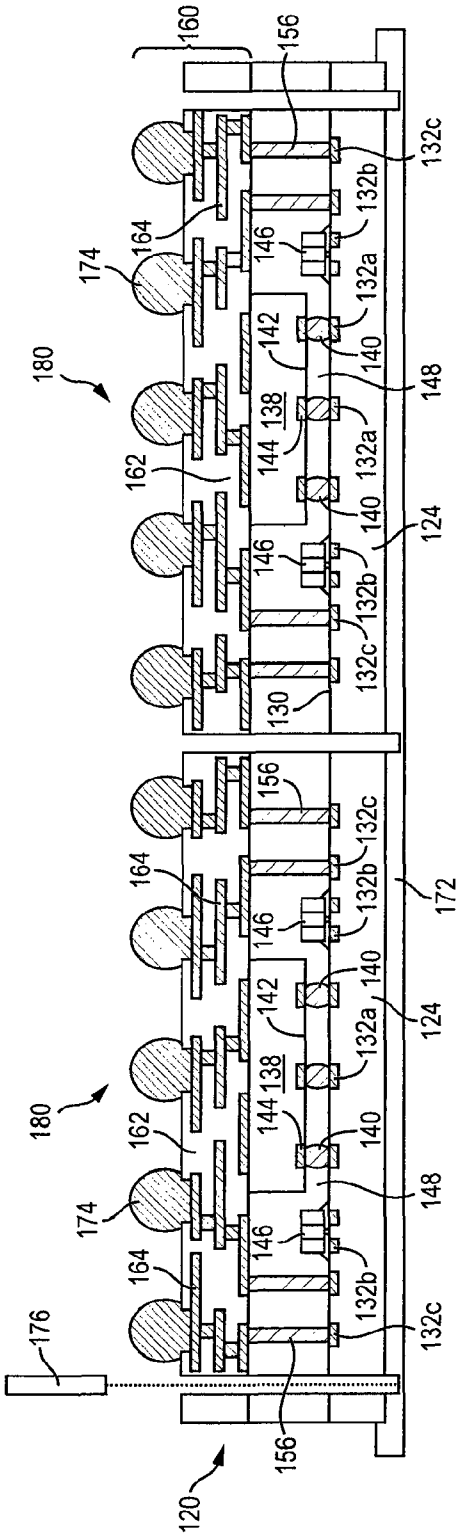
160
156
132c
132b
164
146
174
132a
142
140
180
148
138
144
162
124
130
172
176
120

FIG. 3l

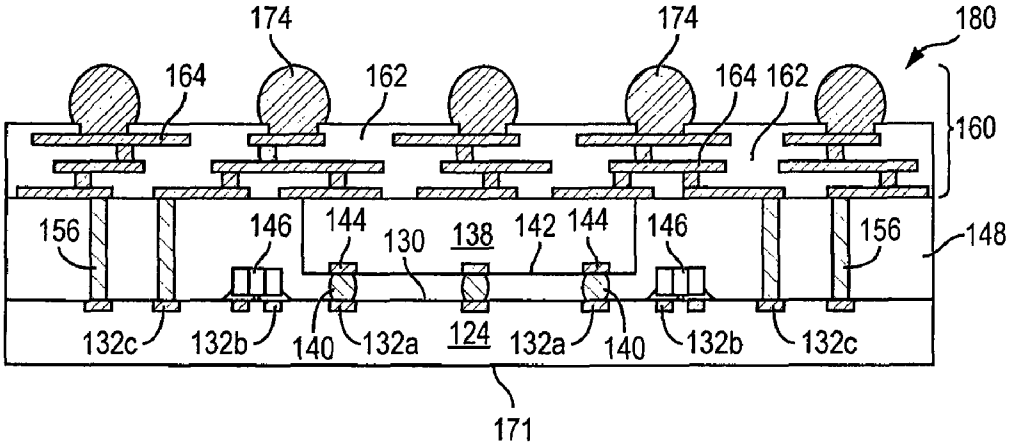

FIG. 4

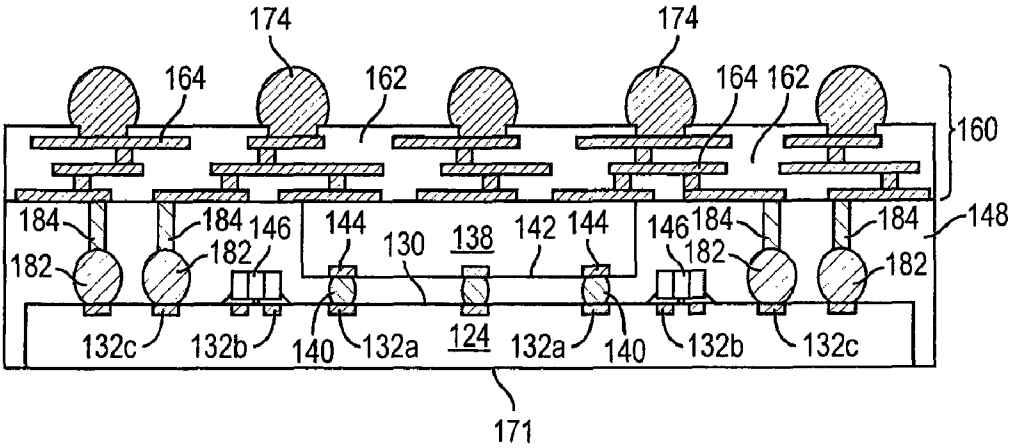

FIG. 5

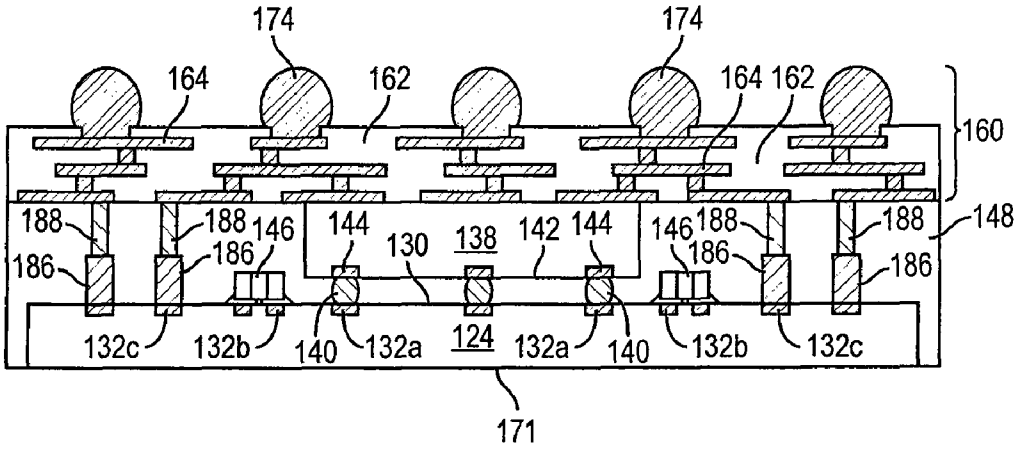

FIG. 6

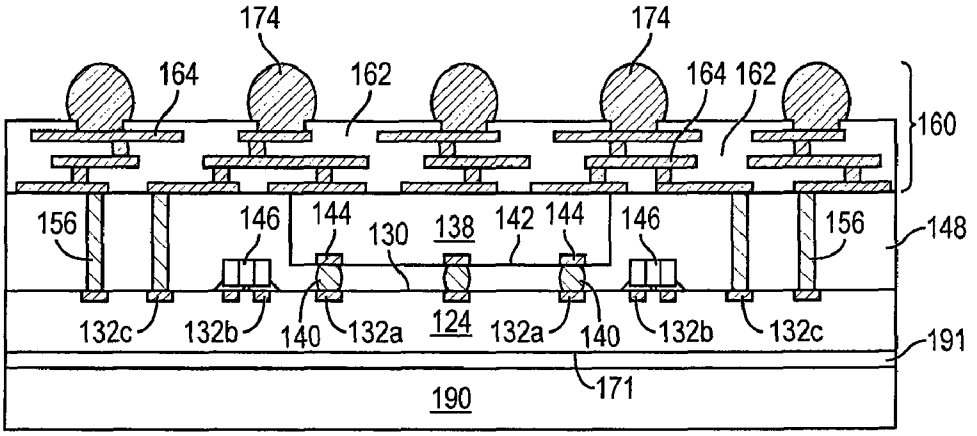

FIG. 7

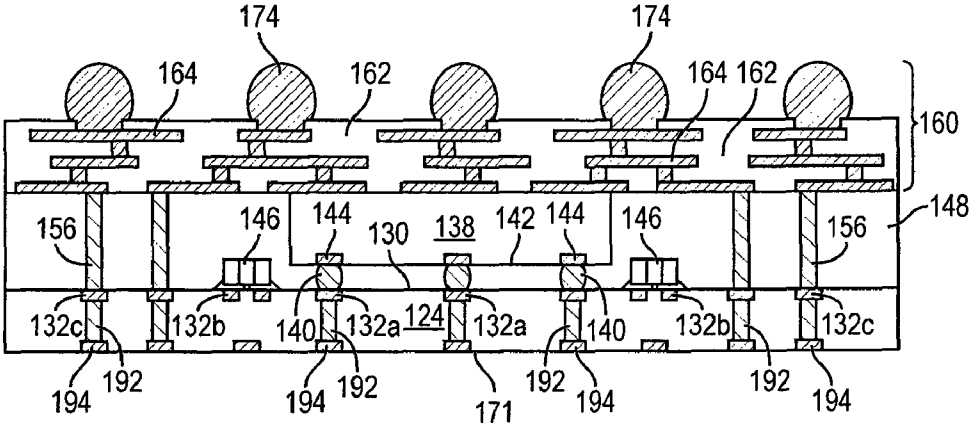

FIG. 8a

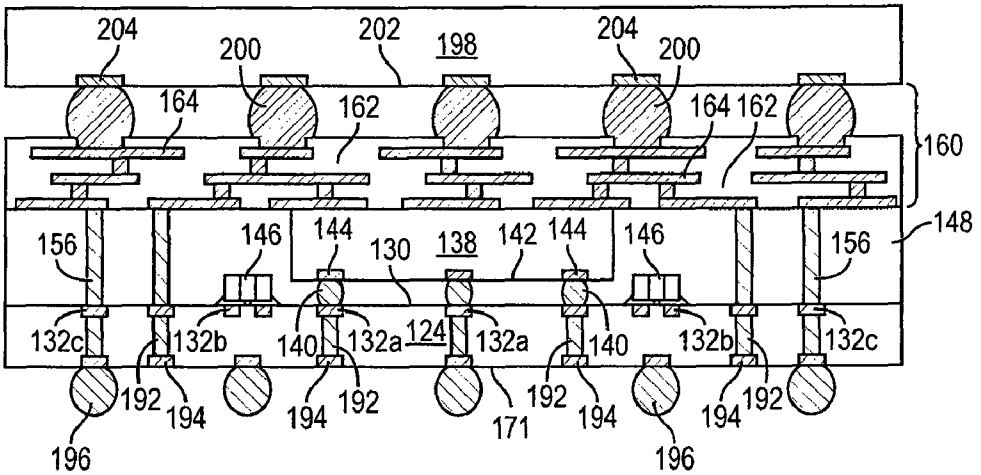

FIG. 8b

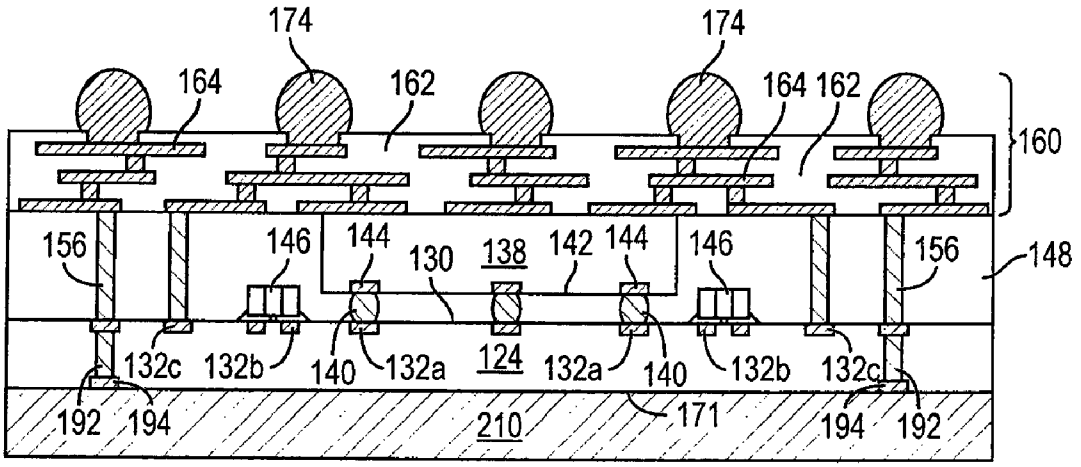

FIG. 9

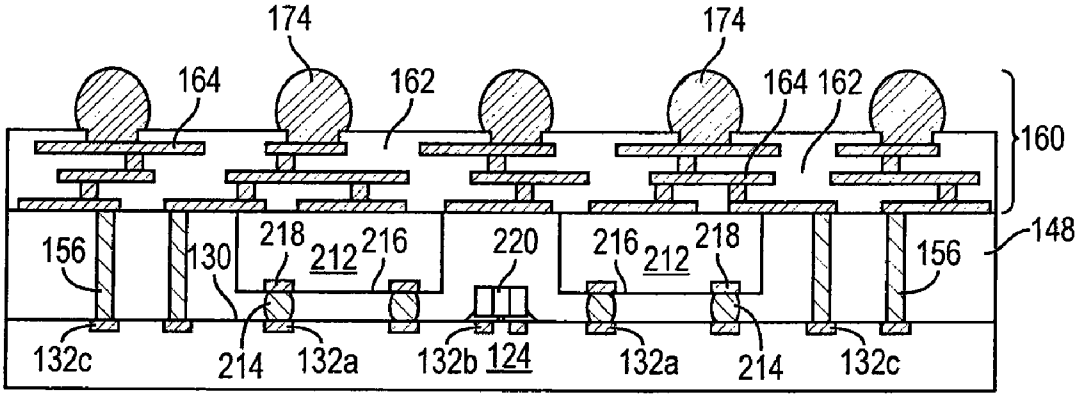

FIG. 10

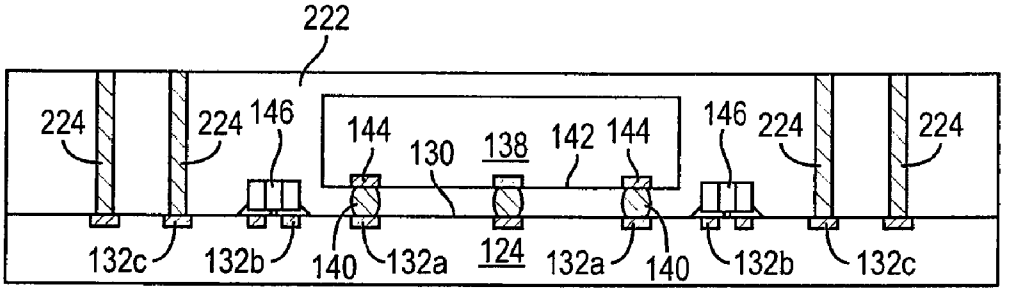

FIG. 11a

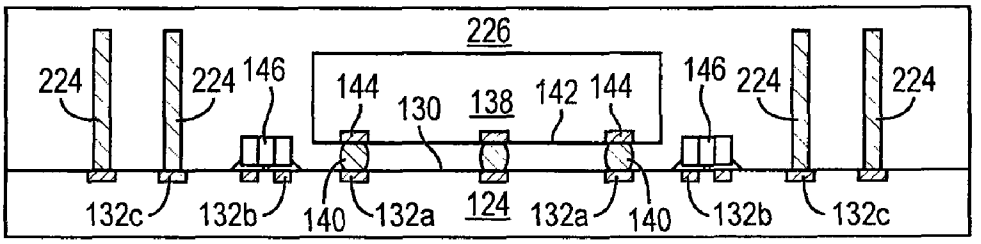

FIG. 11b

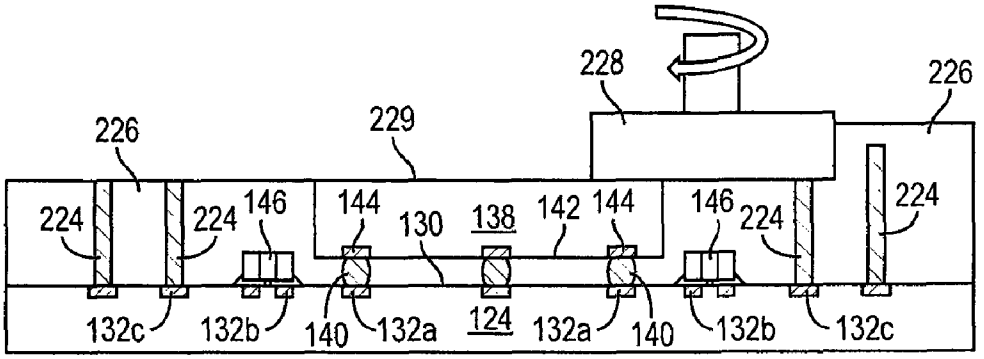

FIG. 11c

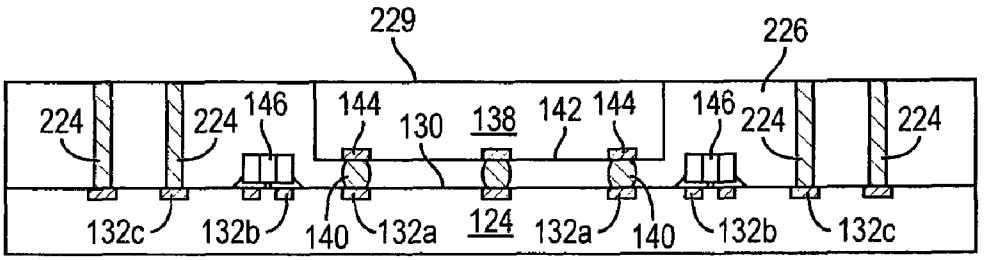

FIG. 11d

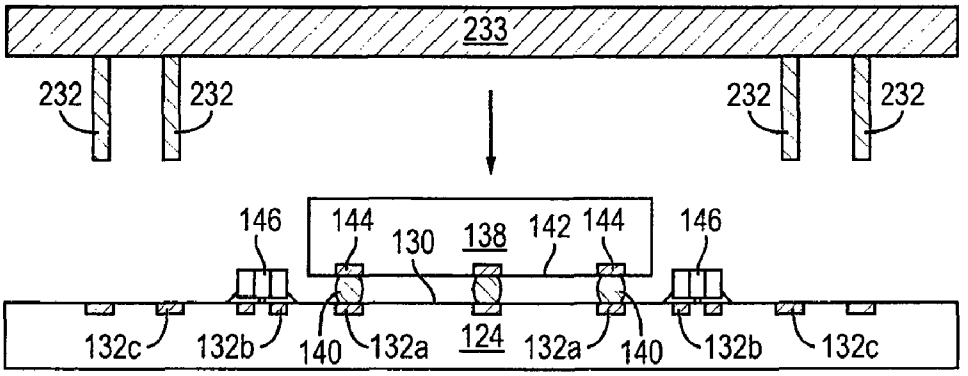

FIG. 12a

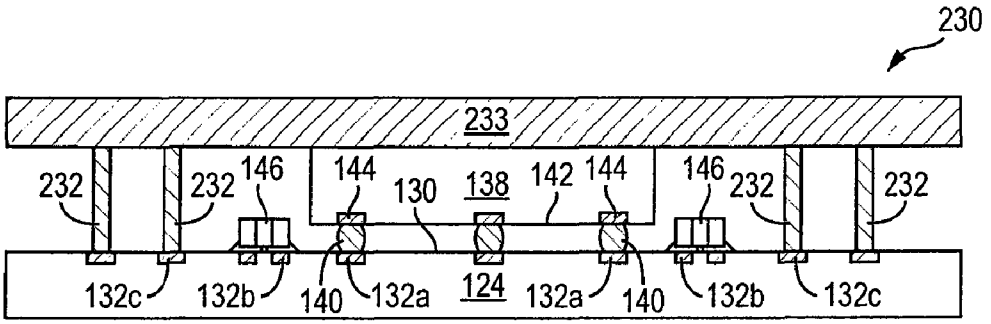

FIG. 12b

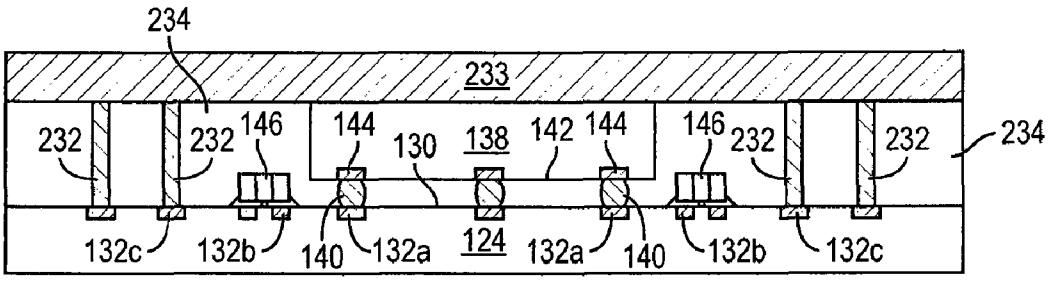

FIG. 12c

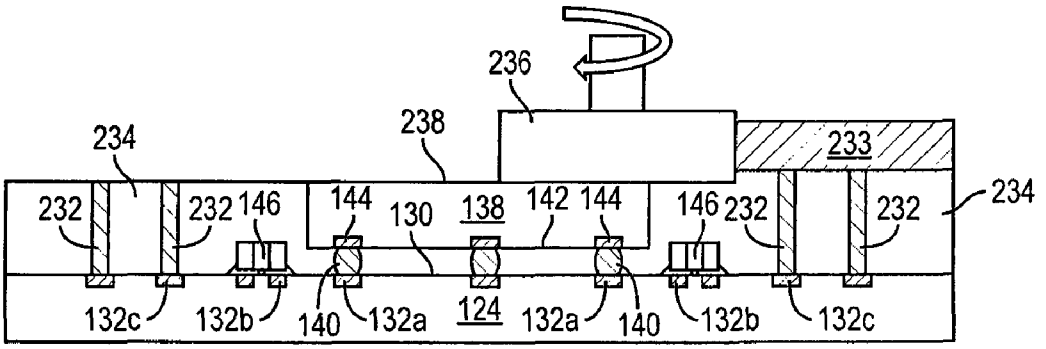

FIG. 12d

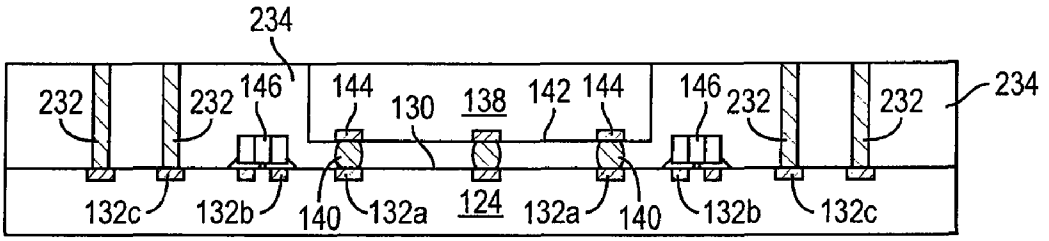

FIG. 12e

METHOD OF FORMING THIN PROFILE WLCSP WITH VERTICAL INTERCONNECT OVER PACKAGE FOOTPRINT

FIELD OF THE INVENTION

The present invention relates in general to semiconductor devices and, more particularly, to a semiconductor device and method of forming a thin profile WLCSP containing face to face semiconductor die with vertical interconnect capability over the entire package footprint.

BACKGROUND OF THE INVENTION

Semiconductor devices are commonly found in modern electronic products. Semiconductor devices vary in the number and density of electrical components. Discrete semiconductor devices generally contain one type of electrical component, e.g., light emitting diode (LED), small signal transistor, resistor, capacitor, inductor, and power metal oxide semiconductor field effect transistor (MOSFET). Integrated semiconductor devices typically contain hundreds to millions of electrical components. Examples of integrated semiconductor devices include microcontrollers, microprocessors, charged-coupled devices (CCDs), solar cells, and digital micro-mirror devices (DMDs).

Semiconductor devices perform a wide range of functions such as high-speed calculations, transmitting and receiving electromagnetic signals, controlling electronic devices, transforming sunlight to electricity, and creating visual projections for television displays. Semiconductor devices are found in the fields of entertainment, communications, power conversion, networks, computers, and consumer products. Semiconductor devices are also found in military applications, aviation, automotive, industrial controllers, and office equipment.

Semiconductor devices exploit the electrical properties of semiconductor materials. The atomic structure of semiconductor material allows its electrical conductivity to be manipulated by the application of an electric field or base current or through the process of doping. Doping introduces impurities into the semiconductor material to manipulate and control the conductivity of the semiconductor device.

A semiconductor device contains active and passive electrical structures. Active structures, including bipolar and field effect transistors, control the flow of electrical current. By varying levels of doping and application of an electric field or base current, the transistor either promotes or restricts the flow of electrical current. Passive structures, including resistors, capacitors, and inductors, create a relationship between voltage and current necessary to perform a variety of electrical functions. The passive and active structures are electrically connected to form circuits, which enable the semiconductor device to perform high-speed calculations and other useful functions.

Semiconductor devices are generally manufactured using two complex manufacturing processes, i.e., front-end manufacturing, and back-end manufacturing, each involving potentially hundreds of steps. Front-end manufacturing involves the formation of a plurality of die on the surface of a semiconductor wafer. Each die is typically identical and contains circuits formed by electrically connecting active and passive components. Back-end manufacturing involves singulating individual die from the finished wafer and packaging the die to provide structural support and environmental isolation.

One goal of semiconductor manufacturing is to produce smaller semiconductor devices. Smaller devices typically

consume less power, have higher performance, and can be produced more efficiently. In addition, smaller semiconductor devices have a smaller footprint, which is desirable for smaller end products. A smaller die size may be achieved by improvements in the front-end process resulting in die with smaller, higher density active and passive components. Back-end processes may result in semiconductor device packages with a smaller footprint by improvements in electrical interconnection and packaging materials.

In a wafer level chip scale package (WLCSP) containing stacked semiconductor die, the vertical electrical interconnection can be accomplished with conductive through silicon vias (TSV), through hole vias (THV), or Cu-plated conductive pillars in the encapsulant. It is desirable to make the WLCSP as thin as practicable. At the same time, the vertical interconnect capability should be maximized. TSVs consume silicon area and reduce active surface area for circuits. In the case of THVs or conductive pillars in the encapsulant, the WLCSP has only limited vertical interconnect around a perimeter of the lower semiconductor die because there is no vertical interconnect within the foot-print of the lower die. The thin profile requirement limits the vertical interconnect capability by reducing areas to form the vertical interconnections.

SUMMARY OF THE INVENTION

A need exists for thin profile WLCSP with greater vertical interconnect capability. Accordingly, in one embodiment, the present invention is a method of making a semiconductor device comprising the steps of providing a semiconductor wafer having a plurality of first semiconductor die each with an active surface, and mounting a second semiconductor die to the first semiconductor die. The active surface of the first semiconductor die is oriented toward an active surface of the second semiconductor die. The method further includes the steps of depositing an encapsulant over the first and second semiconductor die, removing a portion of a back surface of the second semiconductor die opposite the active surface, forming conductive pillars around the second semiconductor die, and forming an interconnect structure over the back surface of the second semiconductor die, encapsulant, and conductive pillars. The interconnect structure is electrically connected to the conductive pillars. The method further includes the steps of removing a portion of a back surface of the first semiconductor die opposite the active surface, and singulating the semiconductor wafer into individual semiconductor devices.

In another embodiment, the present invention is a method of making a semiconductor device comprising the steps of providing a semiconductor wafer having a plurality of first semiconductor die each with an active surface, and mounting a second semiconductor die to the first semiconductor die. The active surface of the first semiconductor die is oriented toward an active surface of the second semiconductor die. The method further includes the steps of forming a vertical interconnect structure around the second semiconductor die, depositing an encapsulant over the first and second semiconductor die, removing a portion of a back surface of the second semiconductor die opposite the active surface, and forming a build-up interconnect structure over the back surface of the second semiconductor die, encapsulant, and vertical interconnect structure. The build-up interconnect structure is electrically connected to the vertical interconnect structure. The method further includes the steps of removing a portion of a back surface of the first semiconductor die opposite the active

surface, and singulating the semiconductor wafer into individual semiconductor devices.

In another embodiment, the present invention is a method of making a semiconductor device comprising the steps of providing a first semiconductor die having an active surface, and mounting a second semiconductor die to the first semiconductor die. The active surface of the first semiconductor die is oriented toward an active surface of the second semiconductor die. The method further includes the steps of forming a vertical interconnect structure around the second semiconductor die, depositing an encapsulant over the first and second semiconductor die, removing a portion of a back surface of the second semiconductor die opposite the active surface, and forming a build-up interconnect structure over the back surface of the second semiconductor die, encapsulant, and vertical interconnect structure. The build-up interconnect structure is electrically connected to the vertical interconnect structure. The method further includes the step removing a portion of a back surface of the first semiconductor die opposite the active surface.

In another embodiment, the present invention is a semiconductor device comprising a first semiconductor die having an active surface. A second semiconductor die is mounted to the first semiconductor die. The active surface of the first semiconductor die is oriented toward an active surface of the second semiconductor die. A vertical interconnect structure is formed around the second semiconductor die. An encapsulant is deposited over the first and second semiconductor die. A build-up interconnect structure is formed over a back surface of the second semiconductor die, encapsulant, and vertical interconnect structure. The build-up interconnect structure is electrically connected to the vertical interconnect structure.

BRIEF DESCRIPTION OF THE DRAWINGS

FIG. **1** illustrates a PCB with different types of packages mounted to its surface;

FIGS. **2***a*-**2***c* illustrate further detail of the representative semiconductor packages mounted to the PCB;

FIGS. **3***a*-**3***l* illustrate a process of forming a thin profile WLCSP with vertical interconnect capability over the entire package footprint;

FIG. **4** illustrates the thin profile WLCSP with vertical interconnect capability over the entire package footprint;

FIG. **5** illustrates bumps and conductive pillars formed in the encapsulant for vertical interconnect;

FIG. **6** illustrates posts and conductive pillars formed in the encapsulant for vertical interconnect;

FIG. **7** illustrates a heat sink mounted to the lower semiconductor die of the WLCSP;

FIGS. **8***a*-**8***b* illustrate TSV formed in the lower semiconductor die of the WLCSP;

FIG. **9** illustrates a shielding layer mounted to the lower semiconductor die in the WLCSP;

FIG. **10** illustrates side-by-side semiconductor die mounted face to face with lower semiconductor die in the WLCSP;

FIGS. **11***a*-**11***d* illustrate another process of forming conductive pillars in the encapsulant; and

FIGS. **12***a*-**12***e* illustrate a leadframe interposer to form conductive pillars in the encapsulant.

DETAILED DESCRIPTION OF THE DRAWINGS

The present invention is described in one or more embodiments in the following description with reference to the figures, in which like numerals represent the same or similar elements. While the invention is described in terms of the best mode for achieving the invention's objectives, it will be appreciated by those skilled in the art that it is intended to cover alternatives, modifications, and equivalents as may be included within the spirit and scope of the invention as defined by the appended claims and their equivalents as supported by the following disclosure and drawings.

Semiconductor devices are generally manufactured using two complex manufacturing processes: front-end manufacturing and back-end manufacturing. Front-end manufacturing involves the formation of a plurality of die on the surface of a semiconductor wafer. Each die on the wafer contains active and passive electrical components, which are electrically connected to form functional electrical circuits. Active electrical components, such as transistors and diodes, have the ability to control the flow of electrical current. Passive electrical components, such as capacitors, inductors, resistors, and transformers, create a relationship between voltage and current necessary to perform electrical circuit functions.

Passive and active components are formed over the surface of the semiconductor wafer by a series of process steps including doping, deposition, photolithography, etching, and planarization. Doping introduces impurities into the semiconductor material by techniques such as ion implantation or thermal diffusion. The doping process modifies the electrical conductivity of semiconductor material in active devices, transforming the semiconductor material into an insulator, conductor, or dynamically changing the semiconductor material conductivity in response to an electric field or base current. Transistors contain regions of varying types and degrees of doping arranged as necessary to enable the transistor to promote or restrict the flow of electrical current upon the application of the electric field or base current.

Active and passive components are formed by layers of materials with different electrical properties. The layers can be formed by a variety of deposition techniques determined in part by the type of material being deposited. For example, thin film deposition may involve chemical vapor deposition (CVD), physical vapor deposition (PVD), electrolytic plating, and electroless plating processes. Each layer is generally patterned to form portions of active components, passive components, or electrical connections between components.

The layers can be patterned using photolithography, which involves the deposition of light sensitive material, e.g., photoresist, over the layer to be patterned. A pattern is transferred from a photomask to the photoresist using light. The portion of the photoresist pattern subjected to light is removed using a solvent, exposing portions of the underlying layer to be patterned. The remainder of the photoresist is removed, leaving behind a patterned layer. Alternatively, some types of materials are patterned by directly depositing the material into the areas or voids formed by a previous deposition/etch process using techniques such as electroless and electrolytic plating.

Depositing a thin film of material over an existing pattern can exaggerate the underlying pattern and create a non-uniformly flat surface. A uniformly flat surface is required to produce smaller and more densely packed active and passive components. Planarization can be used to remove material from the surface of the wafer and produce a uniformly flat surface. Planarization involves polishing the surface of the wafer with a polishing pad. An abrasive material and corrosive chemical are added to the surface of the wafer during polishing. The combined mechanical action of the abrasive and corrosive action of the chemical removes any irregular topography, resulting in a uniformly flat surface.

Back-end manufacturing refers to cutting or singulating the finished wafer into the individual die and then packaging the die for structural support and environmental isolation. To singulate the die, the wafer is scored and broken along non-functional regions of the wafer called saw streets or scribes. The wafer is singulated using a laser cutting tool or saw blade. After singulation, the individual die are mounted to a package substrate that includes pins or contact pads for interconnection with other system components. Contact pads formed over the semiconductor die are then connected to contact pads within the package. The electrical connections can be made with solder bumps, stud bumps, conductive paste, or wirebonds. An encapsulant or other molding material is deposited over the package to provide physical support and electrical isolation. The finished package is then inserted into an electrical system and the functionality of the semiconductor device is made available to the other system components.

FIG. **1** illustrates electronic device **50** having a chip carrier substrate or printed circuit board (PCB) **52** with a plurality of semiconductor packages mounted on its surface. Electronic device **50** may have one type of semiconductor package, or multiple types of semiconductor packages, depending on the application. The different types of semiconductor packages are shown in FIG. **1** for purposes of illustration.

Electronic device **50** may be a stand-alone system that uses the semiconductor packages to perform one or more electrical functions. Alternatively, electronic device **50** may be a subcomponent of a larger system. For example, electronic device **50** may be a graphics card, network interface card, or other signal processing card that can be inserted into a computer. The semiconductor package can include microprocessors, memories, application specific integrated circuits (ASIC), logic circuits, analog circuits, RF circuits, discrete devices, or other semiconductor die or electrical components.

In FIG. **1**, PCB **52** provides a general substrate for structural support and electrical interconnect of the semiconductor packages mounted on the PCB. Conductive signal traces **54** are formed over a surface or within layers of PCB **52** using evaporation, electrolytic plating, electroless plating, screen printing, or other suitable metal deposition process. Signal traces **54** provide for electrical communication between each of the semiconductor packages, mounted components, and other external system components. Traces **54** also provide power and ground connections to each of the semiconductor packages.

In some embodiments, a semiconductor device has two packaging levels. First level packaging is a technique for mechanically and electrically attaching the semiconductor die to an intermediate carrier. Second level packaging involves mechanically and electrically attaching the intermediate carrier to the PCB. In other embodiments, a semiconductor device may only have the first level packaging where the die is mechanically and electrically mounted directly to the PCB.

For the purpose of illustration, several types of first level packaging, including wire bond package **56** and flip chip **58**, are shown on PCB **52**. Additionally, several types of second level packaging, including ball grid array (BGA) **60**, bump chip carrier (BCC) **62**, dual in-line package (DIP) **64**, land grid array (LGA) **66**, multi-chip module (MCM) **68**, quad flat non-leaded package (QFN) **70**, and quad flat package **72**, are shown mounted on PCB **52**. Depending upon the system requirements, any combination of semiconductor packages, configured with any combination of first and second level packaging styles, as well as other electronic components, can be connected to PCB **52**. In some embodiments, electronic device **50** includes a single attached semiconductor package, while other embodiments call for multiple interconnected packages. By combining one or more semiconductor packages over a single substrate, manufacturers can incorporate pre-made components into electronic devices and systems. Because the semiconductor packages include sophisticated functionality, electronic devices can be manufactured using cheaper components and a streamlined manufacturing process. The resulting devices are less likely to fail and less expensive to manufacture resulting in a lower cost for consumers.

FIGS. **2***a*-**2***c* show exemplary semiconductor packages. FIG. **2***a* illustrates further detail of DIP **64** mounted on PCB **52**. Semiconductor die **74** includes an active region containing analog or digital circuits implemented as active devices, passive devices, conductive layers, and dielectric layers formed within the die and are electrically interconnected according to the electrical design of the die. For example, the circuit may include one or more transistors, diodes, inductors, capacitors, resistors, and other circuit elements formed within the active region of semiconductor die **74**. Contact pads **76** are one or more layers of conductive material, such as aluminum (Al), copper (Cu), tin (Sn), nickel (Ni), gold (Au), or silver (Ag), and are electrically connected to the circuit elements formed within semiconductor die **74**. During assembly of DIP **64**, semiconductor die **74** is mounted to an intermediate carrier **78** using a gold-silicon eutectic layer or adhesive material such as thermal epoxy or epoxy resin. The package body includes an insulative packaging material such as polymer or ceramic. Conductor leads **80** and wire bonds **82** provide electrical interconnect between semiconductor die **74** and PCB **52**. Encapsulant **84** is deposited over the package for environmental protection by preventing moisture and particles from entering the package and contaminating die **74** or wire bonds **82**.

FIG. **2***b* illustrates further detail of BCC **62** mounted on PCB **52**. Semiconductor die **88** is mounted over carrier **90** using an underfill or epoxy-resin adhesive material **92**. Wire bonds **94** provide first level packing interconnect between contact pads **96** and **98**. Molding compound or encapsulant **100** is deposited over semiconductor die **88** and wire bonds **94** to provide physical support and electrical isolation for the device. Contact pads **102** are formed over a surface of PCB **52** using a suitable metal deposition process such as electrolytic plating or electroless plating to prevent oxidation. Contact pads **102** are electrically connected to one or more conductive signal traces **54** in PCB **52**. Bumps **104** are formed between contact pads **98** of BCC **62** and contact pads **102** of PCB **52**.

In FIG. **2***c*, semiconductor die **58** is mounted face down to intermediate carrier **106** with a flip chip style first level packaging. Active region **108** of semiconductor die **58** contains analog or digital circuits implemented as active devices, passive devices, conductive layers, and dielectric layers formed according to the electrical design of the die. For example, the circuit may include one or more transistors, diodes, inductors, capacitors, resistors, and other circuit elements within active region **108**. Semiconductor die **58** is electrically and mechanically connected to carrier **106** through bumps **110**.

BGA **60** is electrically and mechanically connected to PCB **52** with a BGA style second level packaging using bumps **112**. Semiconductor die **58** is electrically connected to conductive signal traces **54** in PCB **52** through bumps **110**, signal lines **114**, and bumps **112**. A molding compound or encapsulant **116** is deposited over semiconductor die **58** and carrier **106** to provide physical support and electrical isolation for the device. The flip chip semiconductor device provides a short electrical conduction path from the active devices on semiconductor die **58** to conduction tracks on PCB **52** in order to

reduce signal propagation distance, lower capacitance, and improve overall circuit performance. In another embodiment, the semiconductor die **58** can be mechanically and electrically connected directly to PCB **52** using flip chip style first level packaging without intermediate carrier **106**.

FIGS. **3***a*-**3***l* illustrate, in relation to FIGS. **1** and **2***a*-**2***c*, a process of forming a thin profile WLCSP containing face to face semiconductor die with vertical interconnect capability over the entire package footprint. FIG. **3***a* shows a semiconductor wafer **120** with a base substrate material, such as silicon, germanium, gallium arsenide, indium phosphide, or silicon carbide, for structural support. A plurality of semiconductor die or components **124** is formed on wafer **120** separated by saw streets **126** as described above. A wafer-form substrate or carrier **128** contains temporary or sacrificial base material such as silicon, polymer, polymer composite, metal, ceramic, glass, glass epoxy, beryllium oxide, or other suitable low-cost, rigid material for structural support. Wafer **120** is shown mounted to carrier **128**.

FIG. **3***b* shows a cross-sectional view of a portion of semiconductor wafer **120** mounted to carrier **128**. Each semiconductor die **124** has an active surface **130** containing analog or digital circuits implemented as active devices, passive devices, conductive layers, and dielectric layers formed within the die and electrically interconnected according to the electrical design and function of the die. For example, the circuit may include one or more transistors, diodes, and other circuit elements formed within active surface **130** to implement analog circuits or digital circuits, such as digital signal processor (DSP), ASIC, memory, or other signal processing circuit. Semiconductor die **124** may also contain IPDS, such as inductors, capacitors, and resistors, for RF signal processing. Contact pads **132** are electrically connected to the circuits on active surface **130**.

In FIG. **3***c*, an optional groove **134** is partially cut into saw streets **126** of semiconductor wafer **120** using a saw blade or laser cutting tool **136**. Groove **134** extends only partially into saw streets **126** and does not cut completely through semiconductor wafer **120**. The groove allows later deposited encapsulant to be formed on the sides of semiconductor die **124**.

Continuing with semiconductor wafer **120** from FIG. **3***b*, semiconductor die **138** are mounted to contact pads **132***a* using bumps or microbumps **140**, as shown in FIG. **3***d*. Semiconductor die **138** has an active surface **142** containing analog or digital circuits implemented as active devices, passive devices, conductive layers, and dielectric layers formed within the die and electrically interconnected according to the electrical design and function of the die. For example, the circuit may include one or more transistors, diodes, and other circuit elements formed within active surface **142** to implement analog circuits or digital circuits, such as DSP, ASIC, memory, or other signal processing circuit. Semiconductor die **138** may also contain IPDS, such as inductors, capacitors, and resistors, for RF signal processing. In one embodiment, semiconductor die **138** is a flipchip type device. Bumps **140** connect to contact pads **144** which are electrically connected to the circuits on active surface **142**.

Discrete semiconductor components **146** are electrically connected to contact pads **132***b* on semiconductor wafer **120**. Discrete semiconductor components **146** can be active devices, such as transistors and diodes, or passive devices, such as capacitors, resistors, and inductors.

In FIG. **3***e*, an encapsulant or molding compound **148** is deposited over semiconductor die **138** and wafer **120** using a paste printing, compressive molding, transfer molding, liquid encapsulant molding, vacuum lamination, spin coating, or other suitable applicator. Encapsulant **148** can be polymer composite material, such as epoxy resin with filler, epoxy acrylate with filler, or polymer with proper filler. Encapsulant **148** is non-conductive and environmentally protects the semiconductor device from external elements and contaminants. In the case of optional grooves **134** shown in FIG. **3***c*, encapsulant **148** is also deposited into the grooves to protect the sides of semiconductor die **124** after singulation.

In FIG. **3***f*, grinder **150** removes a portion of encapsulant **148** and bulk material from back surface **152** of semiconductor die **138**, opposite active surface **142**. The back surface **152** of semiconductor die **138** is co-planar with a top surface of encapsulant **148** following the grinding process.

In FIG. **3***g*, a plurality of vias **154** is formed in encapsulant **148** over contact pads **132***c* using laser drilling, mechanical drilling, or deep reactive ion etching (DRIE). The vias **154** are filled with Al, Cu, Sn, Ni, Au, Ag, titanium (Ti), W, polysilicon, or other suitable electrically conductive material using electrolytic plating, electroless plating process, or other suitable metal deposition process to form conductive pillars **156**, as shown in FIG. **3***h*. Conductive pillars **156** have a height ranging from 20-200 micrometers (μm).

In FIG. **3***i*, a build-up interconnect structure **160** is formed over conductive pillars **156**, semiconductor die **138**, and encapsulant **148**. The build-up interconnect structure **160** includes an insulating or passivation layer **162** formed by PVD, CVD, printing, spin coating, spray coating, or thermal oxidation. The insulating layer **162** can be one or more layers of silicon dioxide (SiO2), silicon nitride (Si3N4), silicon oxynitride (SiON), tantalum pentoxide (Ta2O5), aluminum oxide (Al2O3), or other material having similar insulating and structural properties. An electrically conductive layer **164** is formed using patterning and PVD, CVD, electrolytic plating, electroless plating process, or other suitable metal deposition process. Conductive layer **164** can be one or more layers of Al, Cu, Sn, Ni, Au, Ag, or other suitable electrically conductive material. Conductive layer **164** is electrically connected to conductive pillars **156** and, in part, operates as a redistribution layer (RDL) to extend the electrical connectivity of the conductive pillars.

In one embodiment, an integrated passive device (IPDS), such a capacitor, resistor, or inductor, can be formed in build-up interconnect structure **160**.

In FIG. **3***j*, a substrate or carrier **168** contains temporary or sacrificial base material such as silicon, polymer, polymer composite, metal, ceramic, glass, glass epoxy, beryllium oxide, or other suitable low-cost, rigid material for structural support. The assembly described in FIGS. **3***a*-**3***i* is inverted and, leading with build-up interconnect structure **160**, mounted to carrier **168**. The temporary carrier **128** is removed by chemical etching, mechanical peel-off, CMP, mechanical grinding, thermal bake, laser scanning, or wet stripping.

In FIG. **3***k*, grinder **170** removes excess bulk material from back surface **171** of semiconductor die **124**, opposite active surface **130**.

In FIG. **3***l*, a substrate or carrier **172** contains temporary or sacrificial base material such as silicon, polymer, polymer composite, metal, ceramic, glass, glass epoxy, beryllium oxide, or other suitable low-cost, rigid material for structural support. The assembly described in FIG. **3***k* is inverted and, leading with semiconductor die **124**, mounted to carrier **172**. The temporary carrier **168** is removed by chemical etching, mechanical peel-off, CMP, mechanical grinding, thermal bake, laser scanning, or wet stripping.

An electrically conductive bump material is deposited over conductive layer **164** using an evaporation, electrolytic plating, electroless plating, ball drop, or screen printing process.

The bump material can be Al, Sn, Ni, Au, Ag, Pb, Bi, Cu, solder, and combinations thereof, with an optional flux solution. For example, the bump material can be eutectic Sn/Pb, high-lead solder, or lead-free solder. The bump material is bonded to conductive layer **164** using a suitable attachment or bonding process. In one embodiment, the bump material is reflowed by heating the material above its melting point to form spherical balls or bumps **174**. In some applications, bumps **174** are reflowed a second time to improve electrical contact to conductive layer **164**. The bumps can also be compression bonded to conductive layer **164**. Bumps **174** represent one type of interconnect structure that can be formed over conductive layer **164**. The interconnect structure can also use bond wires, conductive paste, stud bump, micro bump, or other electrical interconnect.

Semiconductor wafer **120** is singulated through saw streets **126** with saw blade or laser cutting tool **176**, as shown in FIG. **3***l*. The cut through semiconductor wafer **120** continues only partially into carrier **172**. The temporary carrier **172** is removed by chemical etching, mechanical peel-off, CMP, mechanical grinding, thermal bake, laser scanning, or wet stripping to complete separation of the individual WLCSP **180**.

FIG. **4** shows WLCSP **180** after singulation. WLCSP **180** is made using the face to face (F2F) die to wafer (D2W) bonding process, as described in FIGS. **3***a*-**3***l*. WLCSP **180** has a thin package profile due to the die back-grinding process of semiconductor die **124** and **138** after die attach and encapsulation process, see FIGS. **3***f* and **3***k*. The back-grinding after die attach and encapsulation make for a thin robust package which is less susceptible to defects during handling. Conductive pillars **156** provide electrical interconnect between semiconductor die **124** and **138** and build-up interconnect structure **160**. Semiconductor die **124** is electrically connected to semiconductor die **138** with bumps **140** and contact pads **132***a* and **144**. Build-up interconnect structure **160** provides a full array interconnect foot-print, both around a perimeter of the lower semiconductor die **124** and within the footprint of the lower semiconductor die. That is, the combination of conductive pillars **156** and build-up interconnect structure **160** allows the entire footprint of WLCSP **180** to be used for vertical interconnect while maintaining a thin package profile.

FIG. **5** shows an embodiment similar to FIG. **4** with bumps **182** and conductive pillars **184** formed within encapsulant **148** between contact pads **132***c* and conductive layer **164** of build-up interconnect structure **160**. In this embodiment, encapsulant **148** covers the sides of semiconductor die **124** by using grooves **134** as per FIG. **3***c*.

FIG. **6** shows an embodiment similar to FIG. **4** with posts **186** and conductive pillars **188** formed within encapsulant **148** between contact pads **132***c* and conductive layer **164** of build-up interconnect structure **160**. In this embodiment, encapsulant **148** covers the sides of semiconductor die **124** by using grooves **134** as per FIG. **3***c*.

FIG. **7** shows an embodiment similar to FIG. **4** with a heat sink **190** and optional thermal interface material (TIM) **191** mounted over back surface **171** of semiconductor die **124**. Heat sink **190** can be Al, Cu, or another material with high thermal conductivity to provide heat dissipation for semiconductor die **124**. TIM **191** can be aluminum oxide, zinc oxide, boron nitride, or pulverized silver. TIM **191** aids in the distribution and dissipation of heat generated by semiconductor die **124**.

FIG. **8***a* shows an embodiment similar to FIG. **4** with conductive through silicon vias (TSV) **192** formed through semiconductor die **124**. A plurality of vias is formed through semiconductor die **124** over contact pads **132***c* using laser drilling, mechanical drilling, or DRIE. The vias are filled with Al, Cu, Sn, Ni, Au, Ag, Ti, W, poly-silicon, or other suitable electrically conductive material using electrolytic plating, electroless plating process, or other suitable metal deposition process to form conductive TSV **192** for vertical interconnectivity. Contact pads **194** are formed over back surface **171** of semiconductor die **124** and electrically connected to TSVs **192**.

In FIG. **8***b*, an electrically conductive bump material is deposited over conductive pads **194** using an evaporation, electrolytic plating, electroless plating, ball drop, or screen printing process. The bump material can be Al, Sn, Ni, Au, Ag, Pb, Bi, Cu, solder, and combinations thereof, with an optional flux solution. For example, the bump material can be eutectic Sn/Pb, high-lead solder, or lead-free solder. The bump material is bonded to conductive pads **194** using a suitable attachment or bonding process. In one embodiment, the bump material is ref lowed by heating the material above its melting point to form spherical balls or bumps **196**. In some applications, bumps **196** are ref lowed a second time to improve electrical contact to conductive pads **194**. The bumps can also be compression bonded to conductive pads **194**. Bumps **196** represent one type of interconnect structure that can be formed over conductive pads **194**. The interconnect structure can also use bond wires, conductive paste, stud bump, micro bump, or other electrical interconnect.

A semiconductor die **198** is mounted to build-up interconnect structure **160** with bumps **200**. Semiconductor die **198** has an active surface **202** containing analog or digital circuits implemented as active devices, passive devices, conductive layers, and dielectric layers formed within the die and electrically interconnected according to the electrical design and function of the die. For example, the circuit may include one or more transistors, diodes, and other circuit elements formed within active surface **202** to implement analog circuits or digital circuits, such as DSP, ASIC, memory, or other signal processing circuit. Semiconductor die **198** may also contain IPDS, such as inductors, capacitors, and resistors, for RF signal processing. In one embodiment, semiconductor die **198** is a flipchip type device. Bumps **200** connect to contact pads **204** which are electrically connected to the circuits on active surface **202**.

FIG. **9** shows an embodiment similar to FIG. **8***a* with a shielding layer **210** formed over back surface **171** of semiconductor die **124**. Shielding layer **210** can be Cu, Al, ferrite or carbonyl iron, stainless steel, nickel silver, low-carbon steel, silicon-iron steel, foil, epoxy, conductive resin, and other metals and composites capable of blocking or absorbing EMI, RFI, and other inter-device interference. Shielding layer **210** can also be a non-metal material such as carbon-black or aluminum flake to reduce the effects of EMI and RFI. Shielding layer **210** is grounded through contact pads **194**, TSVs **192**, conductive pillars **156**, and build-up interconnect structure **160**.

FIG. **10** shows an embodiment continuing from FIG. **3***b* with two side-by-side semiconductor die **212** mounted to contact pads **132***a* using bumps or microbumps **214**. Semiconductor die **212** has an active surface **216** containing analog or digital circuits implemented as active devices, passive devices, conductive layers, and dielectric layers formed within the die and electrically interconnected according to the electrical design and function of the die. For example, the circuit may include one or more transistors, diodes, and other circuit elements formed within active surface **216** to implement analog circuits or digital circuits, such as DSP, ASIC, memory, or other signal processing circuit. Semiconductor

die **212** may also contain IPDS, such as inductors, capacitors, and resistors, for RF signal processing. In one embodiment, semiconductor die **212** is a flipchip type device. Bumps **214** connect to contact pads **218** which are electrically connected to the circuits on active surface **216**.

Discrete semiconductor component **220** is electrically connected to contact pads **132***b* on semiconductor wafer **120**. Discrete semiconductor components **220** can be active devices, such as transistors and diodes, or passive devices, such as capacitors, resistors, and inductors.

FIGS. **11***a*-**11***d* show another process of forming conductive pillars through the encapsulant. Continuing from FIG. **3***d*, a photoresist layer **222** is deposited over semiconductor die **138** and semiconductor wafer **120**, as shown in FIG. **11***a*. A portion of photoresist layer **222** over contact pads **132***c* is exposed and removed by an etching process. Conductive material such as Cu, Al, tungsten (W), Au, or solder is formed in the removed portion of the photoresist using an electrolytic plating, electroless plating, or selective plating process. The photoresist layer **222** is stripped away leaving conductive pillars **224** having a height ranging from 20-200 μm. In another embodiment, stud bumps are stacked over contact pads **132***c*.

In FIG. **11***b*, an encapsulant or molding compound **226** is deposited over semiconductor die **138** and wafer **120** using a paste printing, compressive molding, transfer molding, liquid encapsulant molding, vacuum lamination, spin coating, or other suitable applicator. Encapsulant **226** can be polymer composite material, such as epoxy resin with filler, epoxy acrylate with filler, or polymer with proper filler. Encapsulant **226** is non-conductive and environmentally protects the semiconductor device from external elements and contaminants.

In FIG. **11***c*, grinder **228** removes a portion of encapsulant **226** and bulk material from back surface **229** of semiconductor die **138**, opposite active surface **142**. The back surface **229** of semiconductor die **138** is co-planar with a top surface of encapsulant **226** following the grinding process, as shown in FIG. **11***d*. The assembly process continues with FIG. **3***i*-**3***l* resulting in a WLCSP similar to FIG. **4**.

FIGS. **12***a*-**12***e* show another process of forming conductive pillars through the encapsulant. Continuing from FIG. **3***d*, a leadframe interposer **230** is mounted over semiconductor die **138** to contact pads **132***c* on semiconductor wafer **120**, as shown in FIGS. **12***a*-**12***b*. Leadframe interposer **230** include vertical segments or bodies **232** extending from plate **233** to contact pads **132***c*. In FIG. **12***c*, an encapsulant or molding compound **234** is deposited under leadframe interposer **120** and over semiconductor die **138** and wafer **120** using a paste printing, compressive molding, transfer molding, liquid encapsulant molding, vacuum lamination, spin coating, or other suitable applicator. Encapsulant **234** can be polymer composite material, such as epoxy resin with filler, epoxy acrylate with filler, or polymer with proper filler. Encapsulant **234** is non-conductive and environmentally protects the semiconductor device from external elements and contaminants. In FIG. **12***d*, grinder **236** removes plate **233** and a portion of encapsulant **234** and bulk material from back surface **238** of semiconductor die **138**, opposite active surface **142**. The back surface **238** of semiconductor die **138** is co-planar with a top surface of encapsulant **234** following the grinding process, as shown in FIG. **12***e*. The remaining bodies **232** constitute conductive pillars in encapsulant **234** after the grinding process. The assembly process continues with FIG. **3***i*-**3***l* resulting in a WLCSP similar to FIG. **4**.

While one or more embodiments of the present invention have been illustrated in detail, the skilled artisan will appreciate that modifications and adaptations to those embodiments may be made without departing from the scope of the present invention as set forth in the following claims.

What is claimed:

1. A method of manufacturing a semiconductor device, comprising:

providing a semiconductor wafer having a plurality of first semiconductor die each with an active surface;

mounting a second semiconductor die to the first semiconductor die, the active surface of the first semiconductor die being oriented toward an active surface of the second semiconductor die;

depositing an encapsulant over the first and second semiconductor die;

removing a portion of a back surface of the second semiconductor die opposite the active surface;

forming conductive pillars around the second semiconductor die;

forming an interconnect structure over the back surface of the second semiconductor die, encapsulant, and conductive pillars, the interconnect structure being electrically connected to the conductive pillars;

removing a portion of a back surface of the first semiconductor die opposite the active surface; and

singulating the semiconductor wafer into individual semiconductor devices.

2. The method of claim **1**, further including mounting a discrete semiconductor component to the first semiconductor die.

3. The method of claim **1**, further including forming a conductive via through the first semiconductor die.

4. The method of claim **1**, further including forming a heat sink over the back surface of the first semiconductor die.

5. The method of claim **1**, further including forming a shielding layer over the back surface of the first semiconductor die.

6. The method of claim **1**, further including mounting side-by-side semiconductor die over the first semiconductor die.

7. A method of manufacturing a semiconductor device, comprising:

providing a semiconductor wafer having a plurality of first semiconductor die each with an active surface;

mounting a second semiconductor die to the first semiconductor die, the active surface of the first semiconductor die being oriented toward an active surface of the second semiconductor die;

forming a vertical interconnect structure around the second semiconductor die;

depositing an encapsulant over the first and second semiconductor die;

removing a portion of a back surface of the second semiconductor die opposite the active surface;

forming a build-up interconnect structure over the back surface of the second semiconductor die, encapsulant, and vertical interconnect structure, the build-up interconnect structure being electrically connected to the vertical interconnect structure;

removing a portion of a back surface of the first semiconductor die opposite the active surface; and

singulating the semiconductor wafer into individual semiconductor devices.

8. The method of claim **7**, further including mounting a discrete semiconductor component to the first semiconductor die.

9. The method of claim **7**, further including forming a conductive via through the first semiconductor die.

10. The method of claim **7**, further including forming a heat sink over the back surface of the first semiconductor die.

11. The method of claim **7**, further including forming a shielding layer over the back surface of the first semiconductor die.

12. The method of claim **7**, wherein the vertical interconnect structure includes a conductive pillar, stacked bumps, post and pillar, or bump and pillar.

13. The method of claim **7**, wherein forming the vertical interconnect structure includes:

mounting a leadframe interposer over the first and second semiconductor die prior to depositing the encapsulant, the leadframe interposer including plate and bodies extending from the plate to the first semiconductor die;

depositing the encapsulant over the first and second semiconductor die and around the bodies of the leadframe interposer; and

removing the plate to leave the bodies in the encapsulant as conductive pillars around the second semiconductor die.

14. A method of manufacturing a semiconductor device, comprising:

providing a first semiconductor die having an active surface;

mounting a second semiconductor die to the first semiconductor die, the active surface of the first semiconductor die being oriented toward an active surface of the second semiconductor die;

forming a vertical interconnect structure around the second semiconductor die;

depositing an encapsulant over the first and second semiconductor die;

removing a portion of a back surface of the second semiconductor die opposite the active surface;

forming a build-up interconnect structure over the back surface of the second semiconductor die, encapsulant, and vertical interconnect structure, the build-up interconnect structure being electrically connected to the vertical interconnect structure; and

removing a portion of a back surface of the first semiconductor die opposite the active surface.

15. The method of claim **14**, further including mounting a discrete semiconductor component to the first semiconductor die.

16. The method of claim **14**, further including forming a conductive via through the first semiconductor die.

17. The method of claim **14**, further including forming a heat sink over the back surface of the first semiconductor die.

18. The method of claim **14**, further including forming a shielding layer over the back surface of the first semiconductor die.

19. The method of claim **14**, wherein the vertical interconnect structure includes a conductive pillar, stacked bumps, post and pillar, or bump and pillar.

20. The method of claim **14**, wherein forming the vertical interconnect structure includes:

mounting a leadframe interposer over the first and second semiconductor die prior to depositing the encapsulant, the leadframe interposer including plate and bodies extending from the plate to the first semiconductor die;

depositing the encapsulant over the first and second semiconductor die; and

removing the plate to leave the bodies in the encapsulant as conductive pillars around the second semiconductor die.

* * * * *