US 20110074028A1

(19) United States

(12) Patent Application Publication

Pendse

(10) Pub. No.: US 2011/0074028 A1

(43) Pub. Date: Mar. 31, 2011

(54) **SEMICONDUCTOR DEVICE AND METHOD OF DISSIPATING HEAT FROM THIN PACKAGE-ON-PACKAGE MOUNTED TO SUBSTRATE**

(75) Inventor: **Rajendra D. Pendse**, Fremont, CA (US)

(73) Assignee: **STATS CHIPPAC, LTD.**, Singapore (SG)

(21) Appl. No.: **12/965,584**

(22) Filed: **Dec. 10, 2010**

Related U.S. Application Data

(63) Continuation-in-part of application No. 10/960,893, filed on Oct. 7, 2004.

Publication Classification

(51) **Int. Cl.**
H01L 23/00 (2006.01)
H01L 21/98 (2006.01)

(52) **U.S. Cl.** **257/737**; 438/108; 257/E21.705; 257/E23.001

(57) **ABSTRACT**

A semiconductor device has a first substrate with a central region. A plurality of bumps is formed around a periphery of the central region of the first substrate. A first semiconductor die is mounted to the central region of the first substrate. A second semiconductor die is mounted to the first semiconductor die over the central region of the first substrate. A height of the first and second die is less than or equal to a height of the bumps. A second substrate has a thermal conduction channel. A surface of the second semiconductor die opposite the first die is mounted to the thermal conductive channel of the second substrate. A thermal interface layer is formed over the surface of the second die. The bumps are electrically connected to contact pads on the second substrate. A conductive plane is formed over a surface of the second substrate.

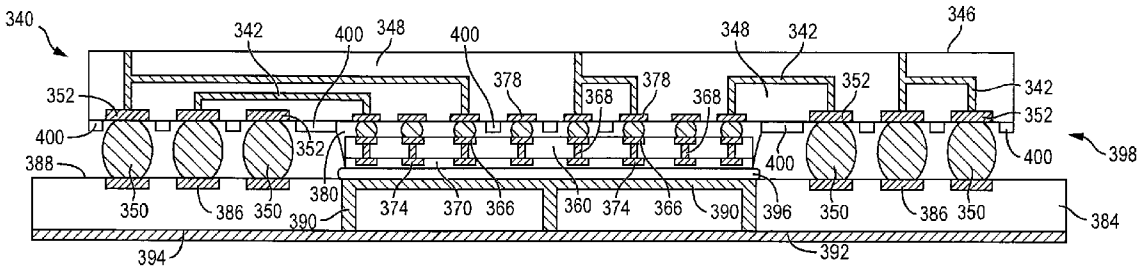

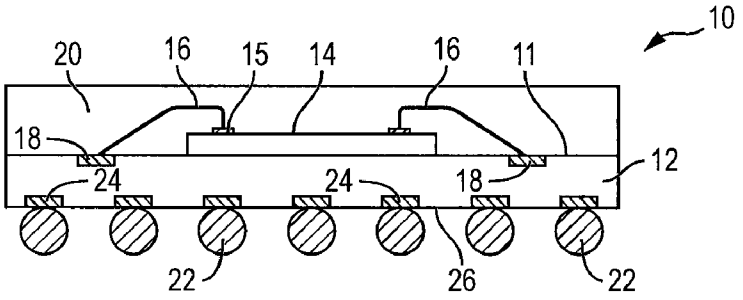

FIG. 1
(PRIOR ART)

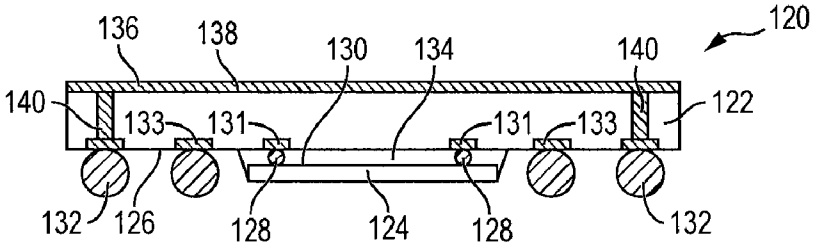

FIG. 4

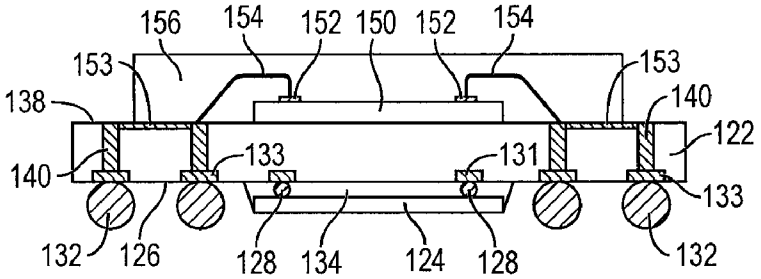

FIG. 5

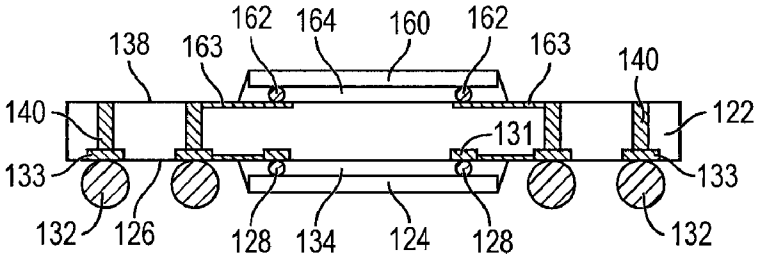

FIG. 6

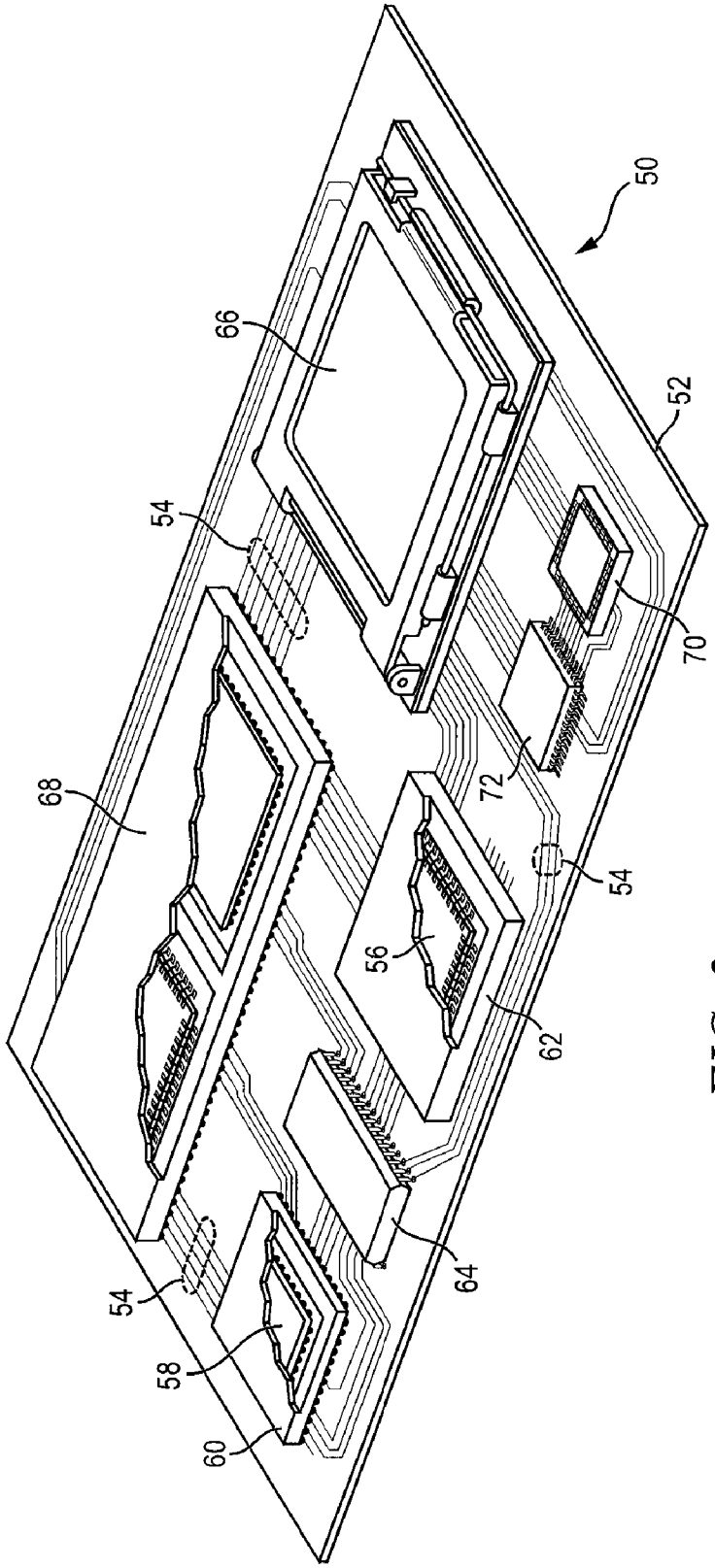

FIG. 2

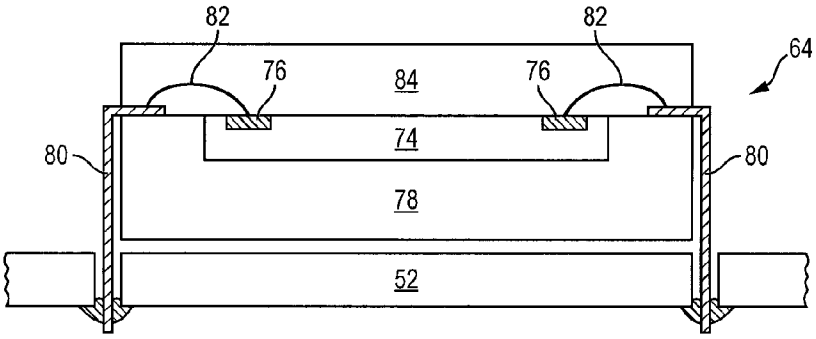

FIG. 3a

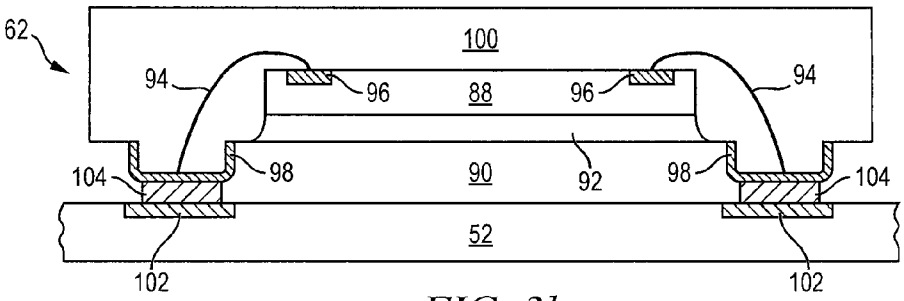

FIG. 3b

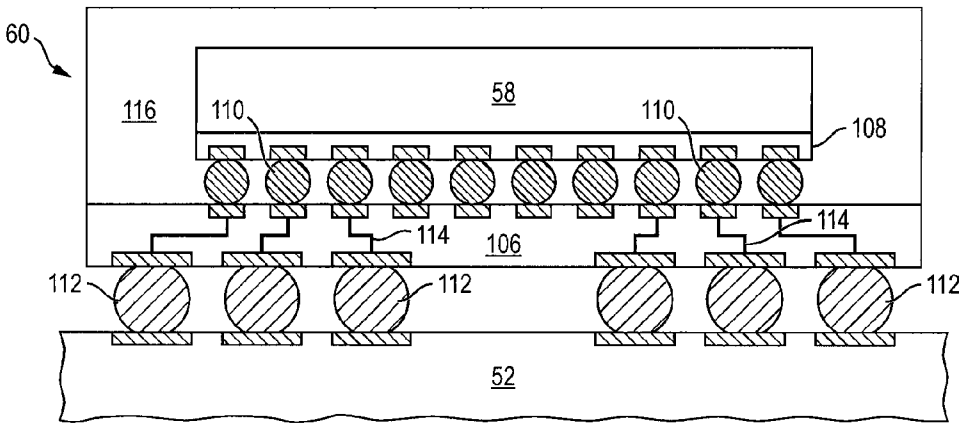

FIG. 3c

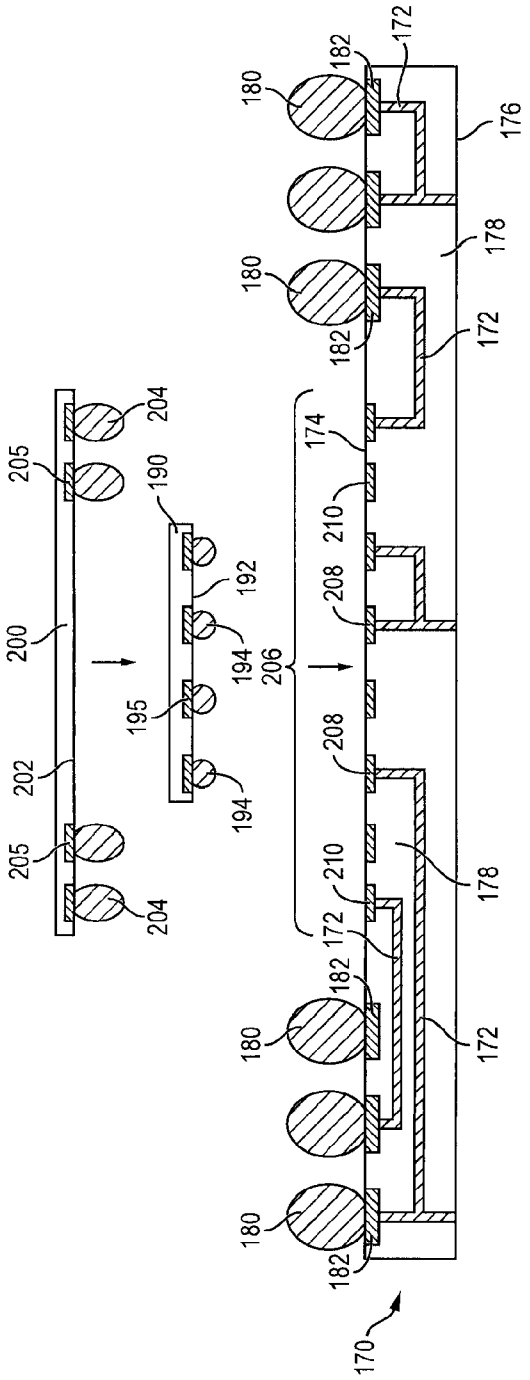
200
202
204
205
190
192
194
195
206
208
210
172
174
176
178
180
182
170

FIG. 7a

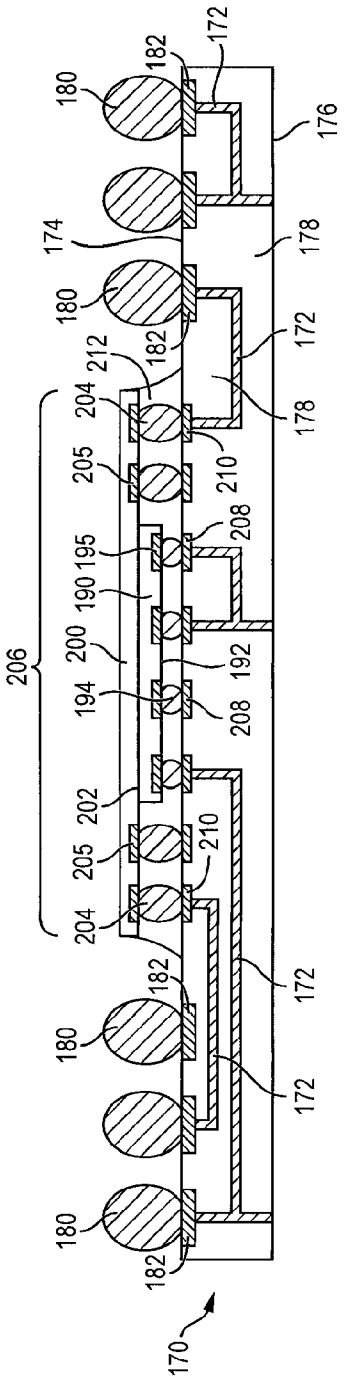
200
202
204
205
206
208
210
212
172
174
176
178
180
182
190
192
194
195
170

FIG. 7b

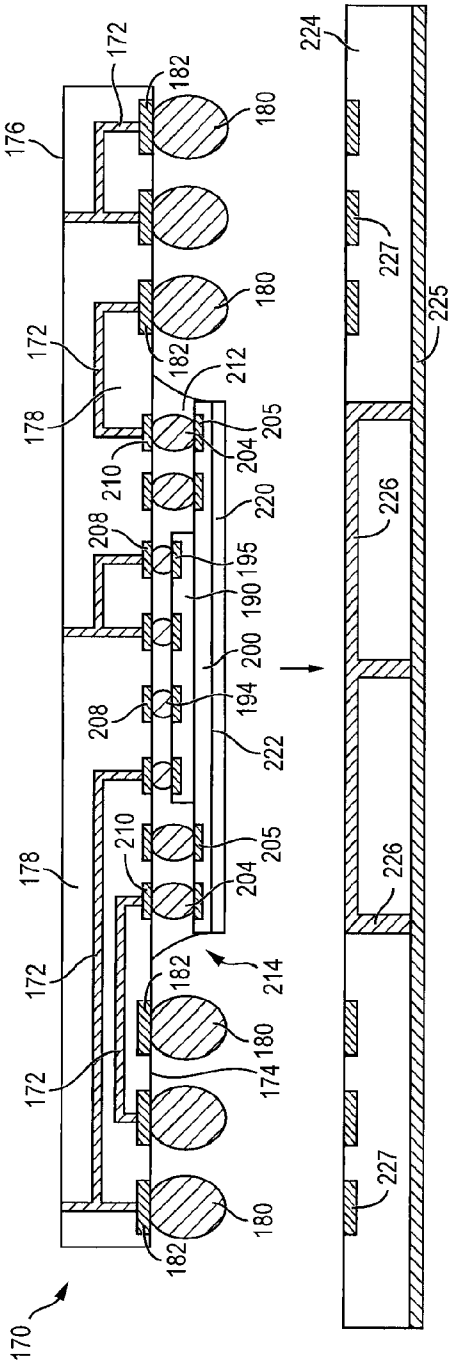
170
172
176
178
180
182
174
204
205
208
210
212
214
220
222
224
225
226
227
190
194
195
200

FIG. 7c

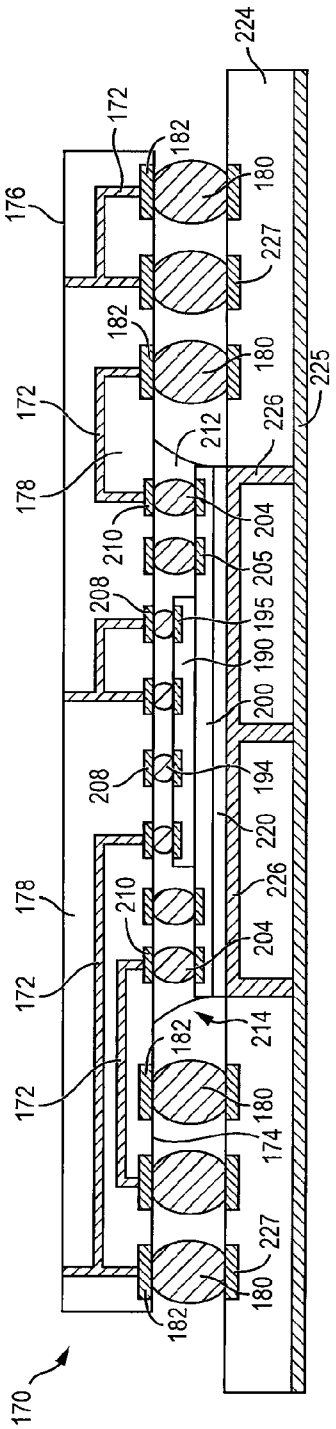
170
172
176
178
180
182
174
204
205
208
210
212
214
220
224
225
226
227
190
194
195
200

FIG. 7d

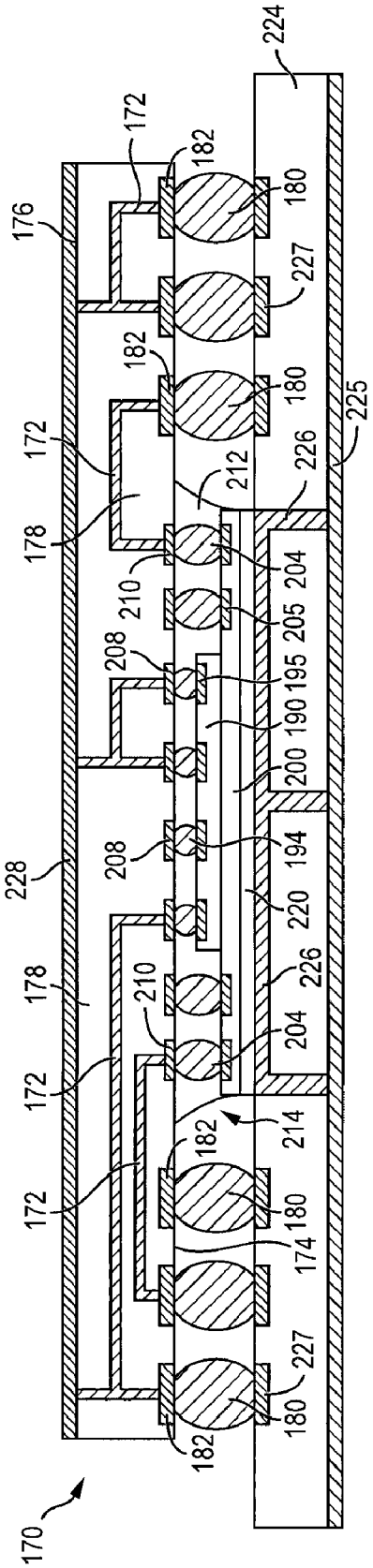
224
172
182
180
176
227
182
180
225
172
226
212
178
204
210
205
208
195
190
200
228
208
194
220
178
226
210
204
172
214
182
172
180
174
227
180
182
170

FIG. 7e

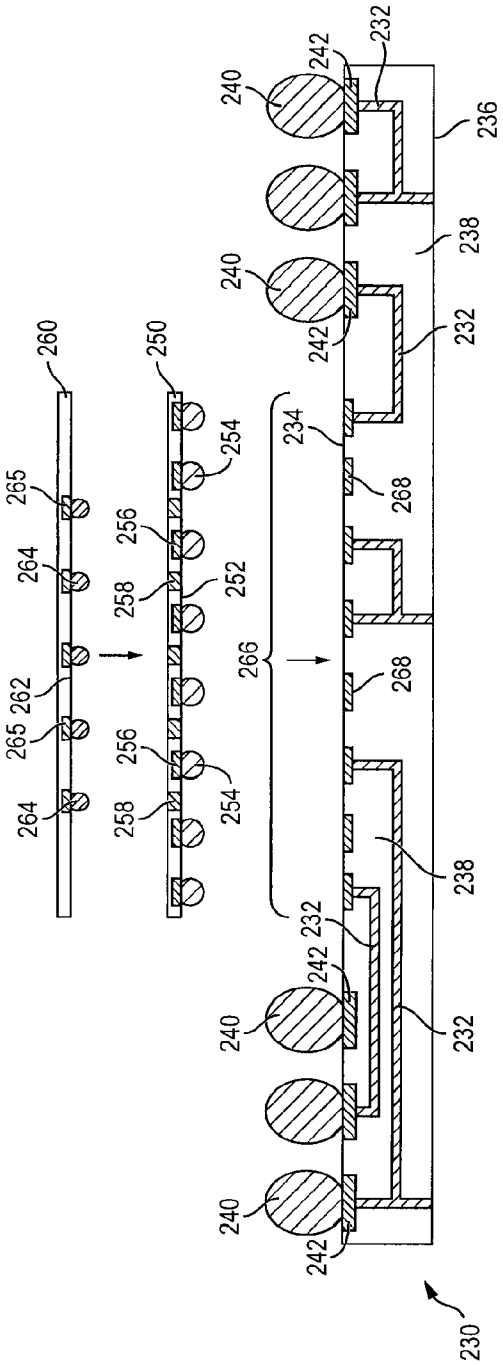
260
250
265
264
262
256
258
252
254
266
234
268
240
242
232
236
238
230

FIG. 8a

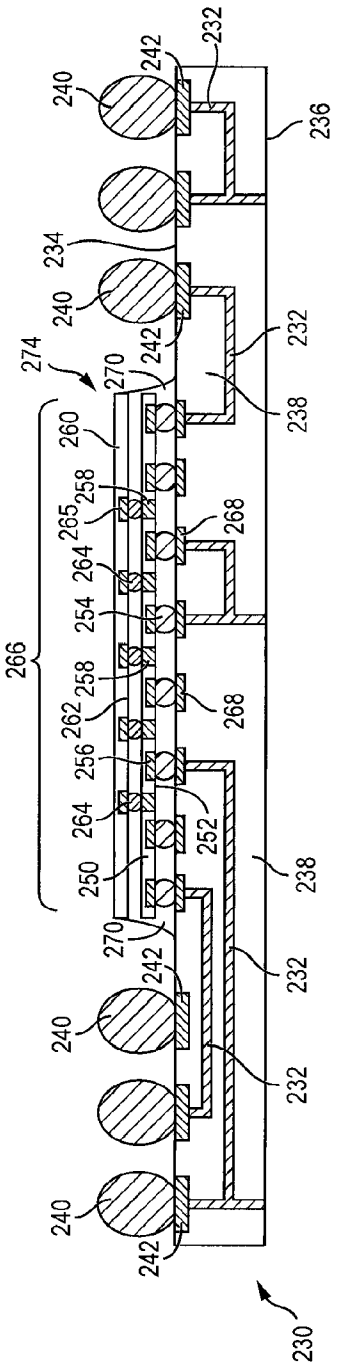
274
270
260
258
265
264
254
262
256
252
250
266
268
240
242
232
234
236
238
230

FIG. 8b

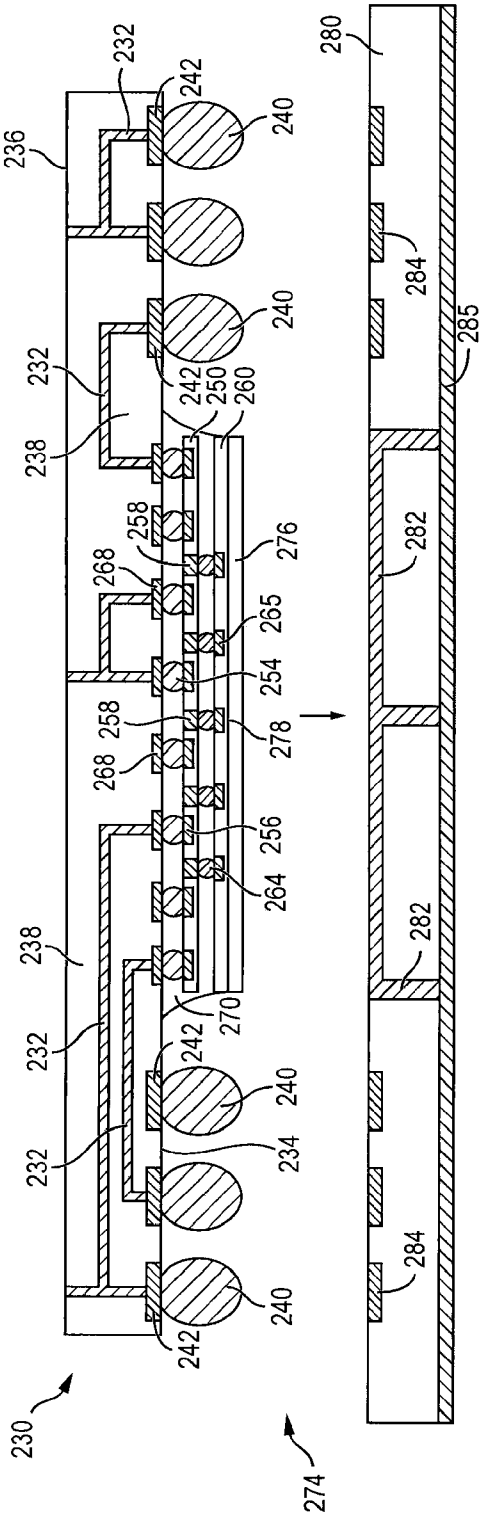
230
232
234
236
238
240
242
250
256
258
260
264
265
268
270
274
276
278
280
282
284
285

FIG. 8c

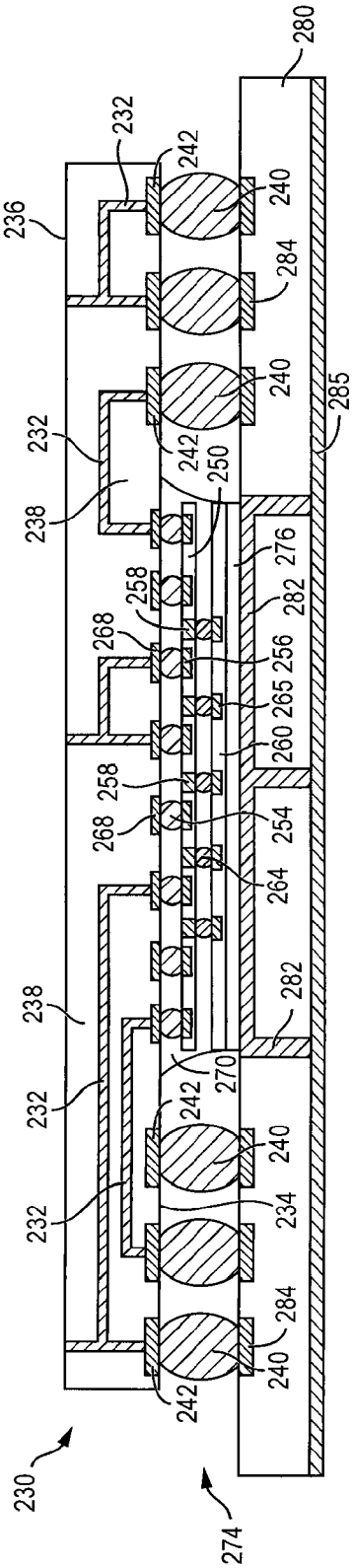
230
232
234
236
238
240
242
250
256
258
260
264
265
268
270
274
276
280
282
284
285

FIG. 8d

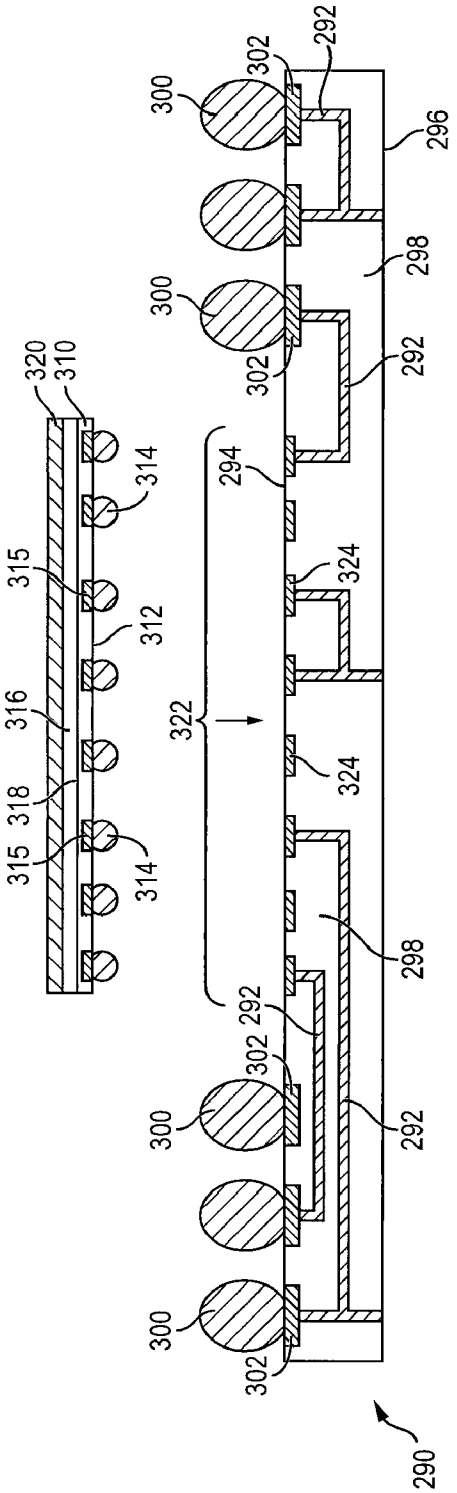
300
302
292
296
298
320
310
314
315
312
316
318
294
324
322
290

FIG. 9a

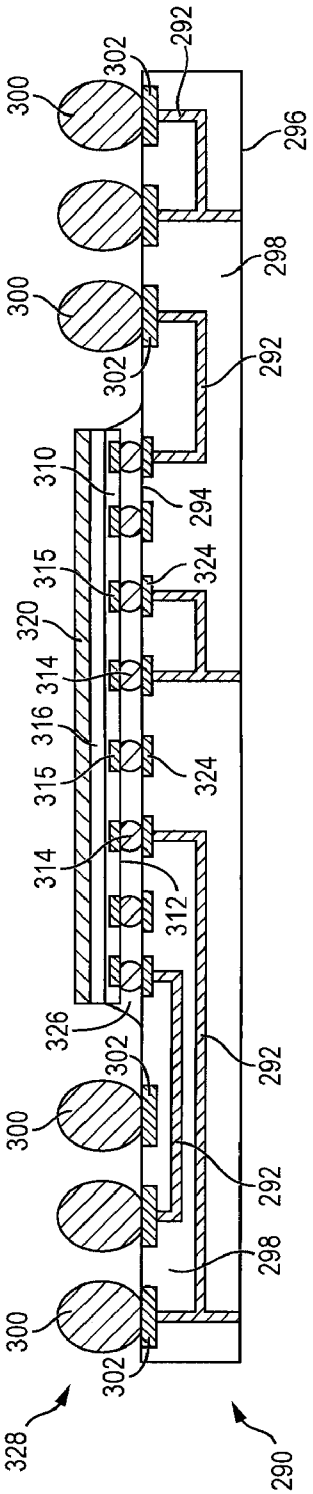
300
302
292
296
298
310
294
315
324
320
314
316
312
326
328
290

FIG. 9b

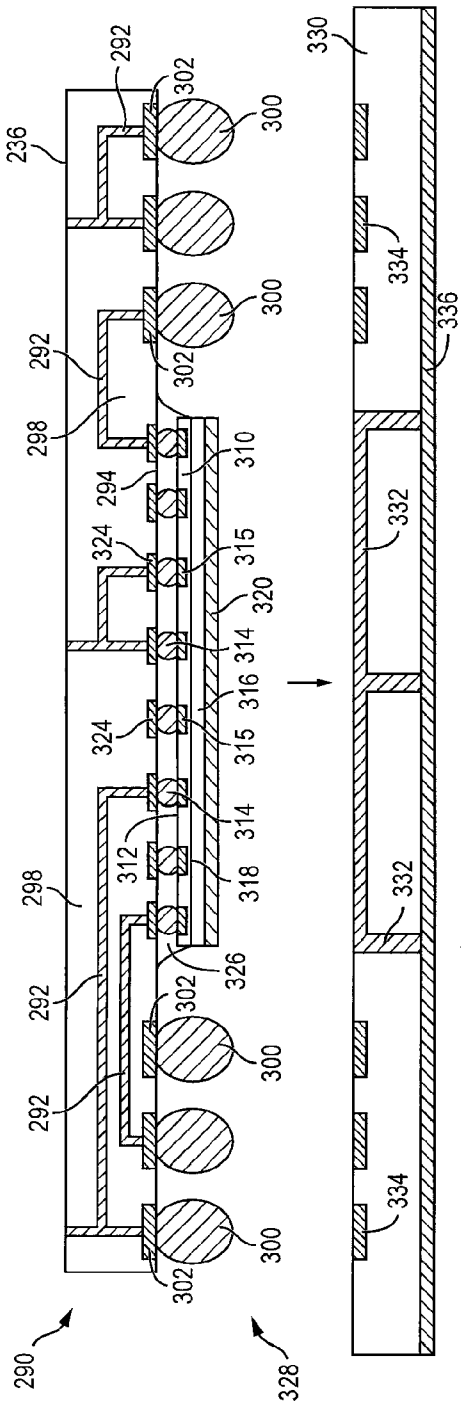
290
328
236
292
298
294
324
312
326
302
300
310
315
320
314
316
318
330
334
336
332

FIG. 9c

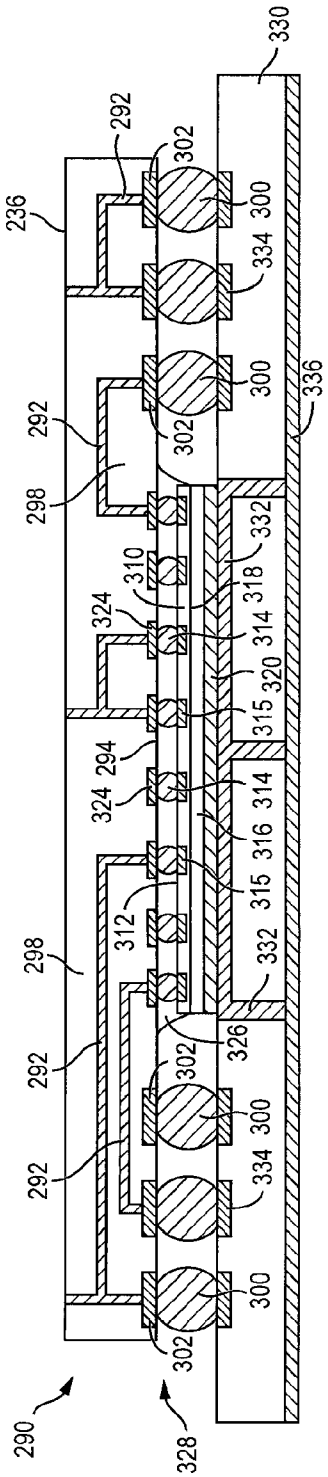
290
328
236
292
298
294
324
312
326
302
300
310
315
320
314
316
318
330
334
336
332

FIG. 9d

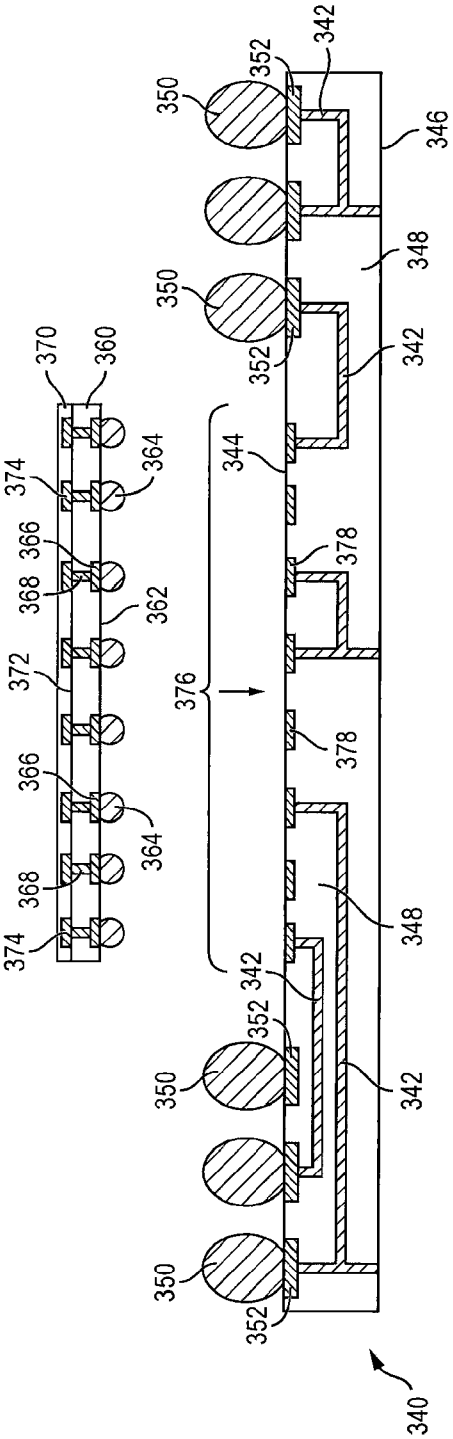

FIG. 10a

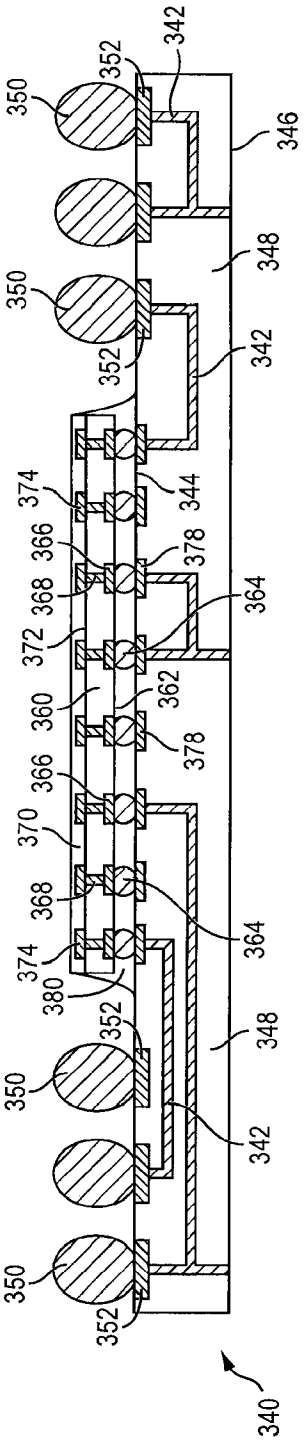

FIG. 10b

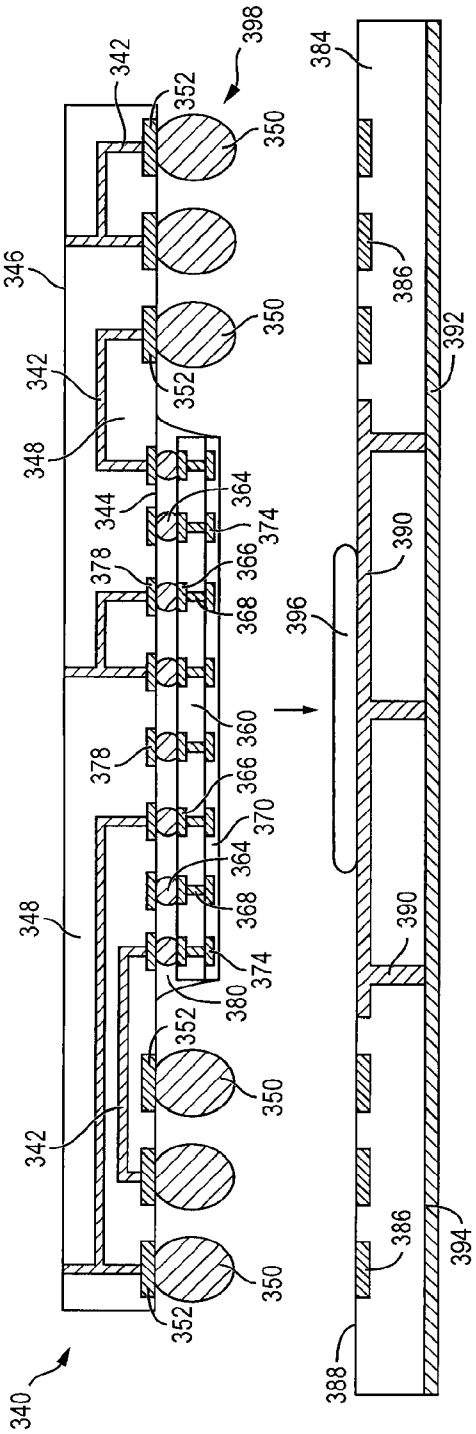

FIG. 10c

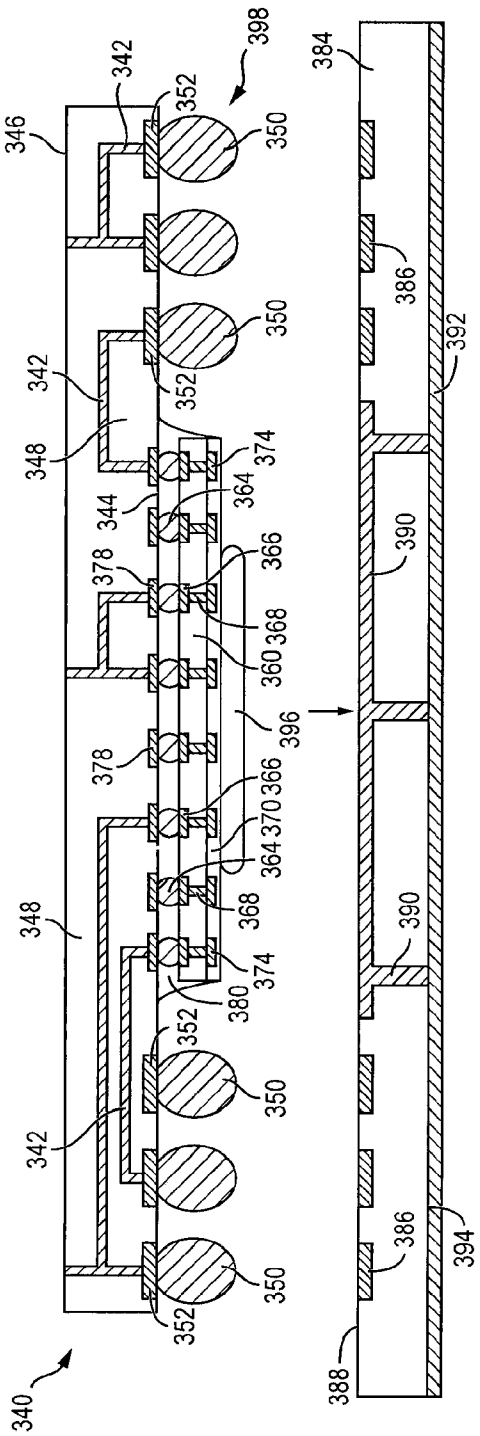

FIG. 10d

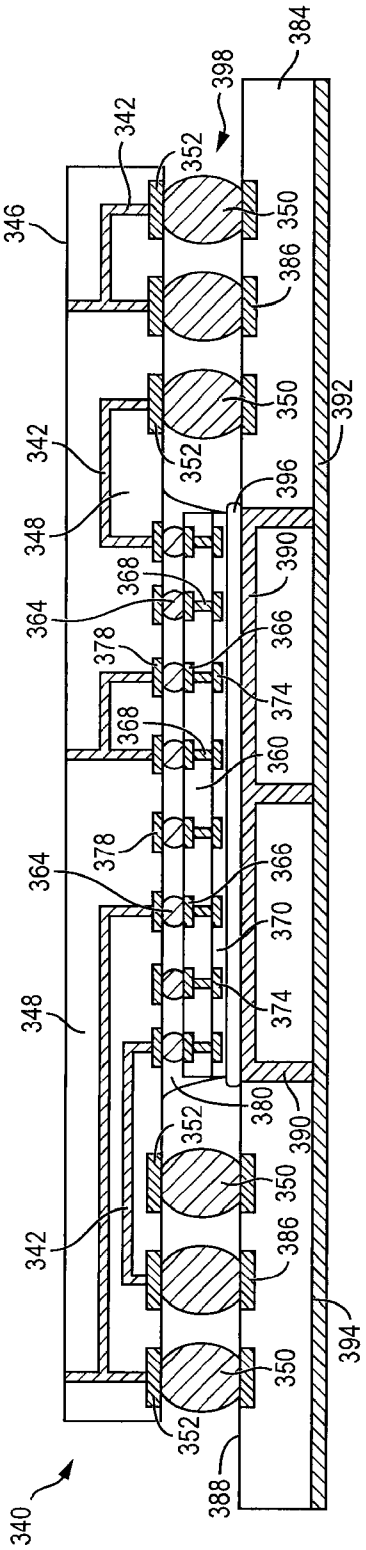

FIG. 10e

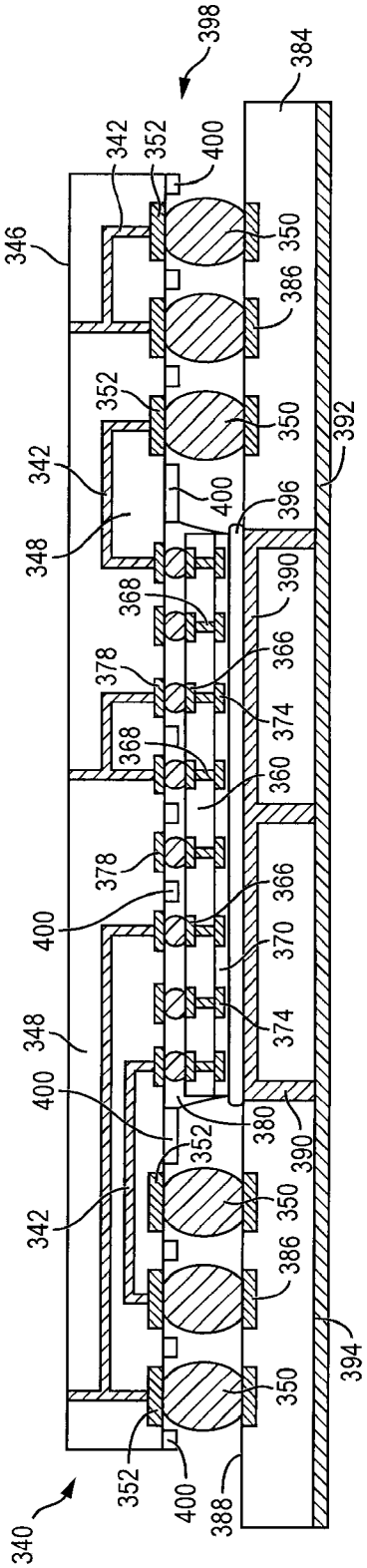

FIG. 11

SEMICONDUCTOR DEVICE AND METHOD OF DISSIPATING HEAT FROM THIN PACKAGE-ON-PACKAGE MOUNTED TO SUBSTRATE

CLAIM TO DOMESTIC PRIORITY

[0001] The present application is a continuation-in-part of U.S. application Ser. No. 10/960,893, filed Oct. 7, 2004, and claims priority to the foregoing application pursuant to 35 U.S.C. §120.

FIELD OF THE INVENTION

[0002] Semiconductor devices are commonly found in modern electronic products. Semiconductor devices vary in the number and density of electrical components. Discrete semiconductor devices generally contain one type of electrical component, e.g., light emitting diode (LED), small signal transistor, resistor, capacitor, inductor, and power metal oxide semiconductor field effect transistor (MOSFET). Integrated semiconductor devices typically contain hundreds to millions of electrical components. Examples of integrated semiconductor devices include microcontrollers, microprocessors, charged-coupled devices (CCDs), solar cells, and digital micro-mirror devices (DMDs).

[0003] Semiconductor devices perform a wide range of functions such as signal processing, high-speed calculations, transmitting and receiving electromagnetic signals, controlling electronic devices, transforming sunlight to electricity, and creating visual projections for television displays. Semiconductor devices are found in the fields of entertainment, communications, power conversion, networks, computers, and consumer products. Semiconductor devices are also found in military applications, aviation, automotive, industrial controllers, and office equipment.

[0004] Semiconductor devices exploit the electrical properties of semiconductor materials. The atomic structure of semiconductor material allows its electrical conductivity to be manipulated by the application of an electric field or base current or through the process of doping. Doping introduces impurities into the semiconductor material to manipulate and control the conductivity of the semiconductor device.

[0005] A semiconductor device contains active and passive electrical structures. Active structures, including bipolar and field effect transistors, control the flow of electrical current. By varying levels of doping and application of an electric field or base current, the transistor either promotes or restricts the flow of electrical current. Passive structures, including resistors, capacitors, and inductors, create a relationship between voltage and current necessary to perform a variety of electrical functions. The passive and active structures are electrically connected to form circuits, which enable the semiconductor device to perform high-speed calculations and other useful functions.

[0006] Semiconductor devices are generally manufactured using two complex manufacturing processes, i.e., front-end manufacturing, and back-end manufacturing, each involving potentially hundreds of steps. Front-end manufacturing involves the formation of a plurality of die on the surface of a semiconductor wafer. Each die is typically identical and contains circuits formed by electrically connecting active and passive components. Back-end manufacturing involves singulating individual die from the finished wafer and packaging the die to provide structural support and environmental isolation.

[0007] One goal of semiconductor manufacturing is to produce smaller semiconductor devices. Smaller devices typically consume less power, have higher performance, and can be produced more efficiently. In addition, smaller semiconductor devices have a smaller footprint, which is desirable for smaller end products. A smaller die size can be achieved by improvements in the front-end process resulting in die with smaller, higher density active and passive components. Back-end processes may result in semiconductor device packages with a smaller footprint by improvements in electrical interconnection and packaging materials.

[0008] Another goal of semiconductor manufacturing is to produce semiconductor devices with adequate heat dissipation. High frequency and high power consumption semiconductor devices generally generate more heat. Without effective heat dissipation, the generated heat can reduce performance, decrease reliability, and reduce the useful lifetime of the semiconductor device.

[0009] Chip scale packages housing semiconductor die are in increasing demand in applications such as hand-held or portable electronics and in miniaturized storage devices, such as disk drives. In many such applications, there is a need for such packages to operate at very high frequencies, typically in excess of 1 GHz, to meet the needs of analog or RF devices and of fast memories used in cellular phones. Chip scale packages are in common use in such applications. Chip scale packages conventionally employ wire bonding to electrically connect the semiconductor die and substrate.

[0010] FIG. **1** shows a conventional chip scale package **10** with semiconductor die **14** attached to surface **11** of substrate **12**. Semiconductor die **14** is electrically connected to substrate **12** by way of bond wires **16** connected between bond wire pads **15** on semiconductor die **14** and interconnect sites **18** on surface **11**. Semiconductor die **14**, bond wires **16**, and surface **11** of substrate **12** are enclosed within and protected by encapsulant **20**. A plurality of second level interconnect bumps **22** is attached to interconnect sites **24** on surface **26** of substrate **12**, opposite surface **11**. Substrate **12** includes electrically conductive traces formed at or near surface **11** and surface **26** for connection with bond wires **16** from semiconductor die **14** and bumps **22**. A plurality of vias can be formed through substrate **12** to electrically interconnect features on surfaces **11** and **26**.

[0011] It is desirable to minimize thickness of the chip scale package. Chip scale packages with bond wire interconnect have an overall package height in the range of 0.6-0.8 millimeters (mm). Further reduction of package thickness is increasingly difficult in part due to the fact that wire bonding interconnection employs wire loops of finite height imposing lower limits on size in the "Z" direction) and finite span imposing lower limits on size in the "X" and "Y" directions. The bond wires are routed from bond pads at the upper surface of the die, up and then across and down to bond sites on the upper surface of the substrate onto which the die is attached. The bond wires are enclosed with a protective encapsulating material. The bond wires and encapsulation typically contribute about 0.2-0.4 mm to the package thickness. In addition, as chip scale packages are made thinner, the second level interconnections between the package and the printed circuit board are less reliable. In particular, second

level interconnections that lie under the footprint of the semiconductor die are most adversely affected.

[0012] Moreover, improvement of electrical performance presents significant challenges because of the difficulty in reducing the signal path length, as the bond wires typically have a length about 1.0 mm. The structure of the package necessitates wrap-around routing of conductive traces as the traces fan outward to vias and run back inward to the bump locations.

SUMMARY OF THE INVENTION

[0013] A need exists for a package structure that circumvents the above obstacles and provides for further package miniaturization, improved high-speed operation, and effective power dissipation. Accordingly, in one embodiment, the present invention is a method of making a semiconductor device comprising the steps of providing a first substrate having a central region, forming a plurality of bumps around a periphery of the central region of the first substrate, mounting a first semiconductor die to the central region of the first substrate, and mounting a second semiconductor die to the first semiconductor die over the central region of the first substrate. A height of the first and second semiconductor die is less than or equal to a height of the bumps. The method further includes the steps of providing a second substrate having a thermal conduction channel, mounting a surface of the second semiconductor die opposite the first semiconductor die to the thermal conductive channel of the second substrate with a thermal interface material, and electrically connecting the bumps to contact pads on the second substrate.

[0014] In another embodiment, the present invention is a method of making a semiconductor device comprising the steps of providing a first substrate, mounting a first semiconductor die to the first substrate, mounting a second semiconductor die to the first semiconductor die over the first substrate, and forming a plurality of bumps over the first substrate around a periphery of the first and second semiconductor die. A height of the first and second semiconductor die is less than or equal to a height of the bumps. The method further includes the steps of providing a second substrate having a thermal conduction channel, and mounting a surface of the second semiconductor die opposite the first semiconductor die to the thermal conductive channel of the second substrate with a thermal interface material.

[0015] In another embodiment, the present invention is a method of making a semiconductor device comprising the steps of providing a first substrate, mounting a first semiconductor die to the first substrate, and forming a plurality of bumps over the first substrate around a periphery of the first semiconductor die. A height of the first semiconductor die is less than or equal to a height of the bumps. The method further includes the steps of providing a second substrate having a thermal conduction channel, and mounting a surface of the first semiconductor die to the thermal conductive channel of the second substrate with a thermal interface material.

[0016] In another embodiment, the present invention is a semiconductor device comprising a first substrate and first semiconductor die mounted to the first substrate. A second semiconductor die is mounted to the first semiconductor die over the first substrate. A plurality of bumps is formed over the first substrate around a periphery of the first and second semiconductor die. A height of the first and second semiconductor die is less than or equal to a height of the bumps. A second substrate has a thermal conduction channel. A surface of the second semiconductor die opposite the first semiconductor die is mounted to the thermal conductive channel of the second substrate with a thermal interface material.

BRIEF DESCRIPTION OF THE DRAWINGS

[0017] FIG. **1** is a sectional view of a conventional chip scale package having bond wire interconnection;

[0018] FIG. **2** illustrates a PCB with different types of packages mounted to its surface;

[0019] FIGS. **3***a*-**3***c* illustrate further detail of the representative semiconductor packages mounted to the PCB;

[0020] FIG. **4** is a sectional view of an embodiment of a thin high speed chip scale package;

[0021] FIG. **5** is a sectional view of another embodiment of a thin high speed chip scale package;

[0022] FIG. **6** is a sectional view of still another embodiment of a thin high speed chip scale package;

[0023] FIGS. **7***a*-**7***e* illustrate a process of dissipating heat from a thin PoP through a TIM to a substrate;

[0024] FIGS. **8***a*-**8***d* illustrate another process of dissipating heat from a thin PoP through a TIM to a substrate;

[0025] FIGS. **9***a*-**9***d* illustrate a heat distributing layer for dissipating heat from a thin semiconductor die mounted to a substrate;

[0026] FIGS. **10***a*-**10***e* illustrate depositing TIM over the semiconductor die or substrate; and

[0027] FIG. **11** illustrates a masking layer to contain underfill material.

DETAILED DESCRIPTION OF THE DRAWINGS

[0028] The present invention is described in one or more embodiments in the following description with reference to the figures, in which like numerals represent the same or similar elements. While the invention is described in terms of the best mode for achieving the invention's objectives, it will be appreciated by those skilled in the art that it is intended to cover alternatives, modifications, and equivalents as may be included within the spirit and scope of the invention as defined by the appended claims and their equivalents as supported by the following disclosure and drawings.

[0029] Semiconductor devices are generally manufactured using two complex manufacturing processes: front-end manufacturing and back-end manufacturing. Front-end manufacturing involves the formation of a plurality of die on the surface of a semiconductor wafer. Each die on the wafer contains active and passive electrical components, which are electrically connected to form functional electrical circuits. Active electrical components, such as transistors and diodes, have the ability to control the flow of electrical current. Passive electrical components, such as capacitors, inductors, resistors, and transformers, create a relationship between voltage and current necessary to perform electrical circuit functions.

[0030] Passive and active components are formed over the surface of the semiconductor wafer by a series of process steps including doping, deposition, photolithography, etching, and planarization. Doping introduces impurities into the semiconductor material by techniques such as ion implantation or thermal diffusion. The doping process modifies the electrical conductivity of semiconductor material in active devices, transforming the semiconductor material into an insulator, conductor, or dynamically changing the semiconductor material conductivity in response to an electric field or

base current. Transistors contain regions of varying types and degrees of doping arranged as necessary to enable the transistor to promote or restrict the flow of electrical current upon the application of the electric field or base current.

[0031] Active and passive components are formed by layers of materials with different electrical properties. The layers can be formed by a variety of deposition techniques determined in part by the type of material being deposited. For example, thin film deposition can involve chemical vapor deposition (CVD), physical vapor deposition (PVD), electrolytic plating, and electroless plating processes. Each layer is generally patterned to form portions of active components, passive components, or electrical connections between components.

[0032] The layers can be patterned using photolithography, which involves the deposition of light sensitive material, e.g., photoresist, over the layer to be patterned. A pattern is transferred from a photomask to the photoresist using light. In one embodiment, the portion of the photoresist pattern subjected to light is removed using a solvent, exposing portions of the underlying layer to be patterned. In another embodiment, the portion of the photoresist pattern not subjected to light, the negative photoresist, is removed using a solvent, exposing portions of the underlying layer to be patterned. The remainder of the photoresist is removed, leaving behind a patterned layer. Alternatively, some types of materials are patterned by directly depositing the material into the areas or voids formed by a previous deposition/etch process using techniques such as electroless and electrolytic plating.

[0033] Depositing a thin film of material over an existing pattern can exaggerate the underlying pattern and create a non-uniformly flat surface. A uniformly flat surface is required to produce smaller and more densely packed active and passive components. Planarization can be used to remove material from the surface of the wafer and produce a uniformly flat surface. Planarization involves polishing the surface of the wafer with a polishing pad. An abrasive material and corrosive chemical are added to the surface of the wafer during polishing. The combined mechanical action of the abrasive and corrosive action of the chemical removes any irregular topography, resulting in a uniformly flat surface.

[0034] Back-end manufacturing refers to cutting or singulating the finished wafer into the individual die and then packaging the die for structural support and environmental isolation. To singulate the die, the wafer is scored and broken along non-functional regions of the wafer called saw streets or scribes. The wafer is singulated using a laser cutting tool or saw blade. After singulation, the individual die are mounted to a package substrate that includes pins or contact pads for interconnection with other system components. Contact pads formed over the semiconductor die are then connected to contact pads within the package. The electrical connections can be made with solder bumps, stud bumps, conductive paste, or wirebonds. An encapsulant or other molding material is deposited over the package to provide physical support and electrical isolation. The finished package is then inserted into an electrical system and the functionality of the semiconductor device is made available to the other system components.

[0035] FIG. **2** illustrates electronic device **50** having a chip carrier substrate or printed circuit board (PCB) **52** with a plurality of semiconductor packages mounted on its surface. Electronic device **50** can have one type of semiconductor package, or multiple types of semiconductor packages, depending on the application. The different types of semiconductor packages are shown in FIG. **2** for purposes of illustration.

[0036] Electronic device **50** can be a stand-alone system that uses the semiconductor packages to perform one or more electrical functions. Alternatively, electronic device **50** can be a subcomponent of a larger system. For example, electronic device **50** can be part of a cellular phone, personal digital assistant (PDA), digital video camera (DVC), or other electronic communication device. Alternatively, electronic device **50** can be a graphics card, network interface card, or other signal processing card that can be inserted into a computer. The semiconductor package can include microprocessors, memories, application specific integrated circuits (ASIC), logic circuits, analog circuits, RF circuits, discrete devices, or other semiconductor die or electrical components. Miniaturization and weight reduction are essential for these products to be accepted by the market. The distance between semiconductor devices must be decreased to achieve higher density.

[0037] In FIG. **2**, PCB **52** provides a general substrate for structural support and electrical interconnect of the semiconductor packages mounted on the PCB. Conductive signal traces **54** are formed over a surface or within layers of PCB **52** using evaporation, electrolytic plating, electroless plating, screen printing, or other suitable metal deposition process. Signal traces **54** provide for electrical communication between each of the semiconductor packages, mounted components, and other external system components. Traces **54** also provide power and ground connections to each of the semiconductor packages.

[0038] In some embodiments, a semiconductor device has two packaging levels. First level packaging is a technique for mechanically and electrically attaching the semiconductor die to an intermediate carrier. Second level packaging involves mechanically and electrically attaching the intermediate carrier to the PCB. In other embodiments, a semiconductor device may only have the first level packaging where the die is mechanically and electrically mounted directly to the PCB.

[0039] For the purpose of illustration, several types of first level packaging, including bond wire package **56** and flip chip **58**, are shown on PCB **52**. Additionally, several types of second level packaging, including ball grid array (BGA) **60**, bump chip carrier (BCC) **62**, dual in-line package (DIP) **64**, land grid array (LGA) **66**, multi-chip module (MCM) **68**, quad flat non-leaded package (QFN) **70**, and quad flat package **72**, are shown mounted on PCB **52**. Depending upon the system requirements, any combination of semiconductor packages, configured with any combination of first and second level packaging styles, as well as other electronic components, can be connected to PCB **52**. In some embodiments, electronic device **50** includes a single attached semiconductor package, while other embodiments call for multiple interconnected packages. By combining one or more semiconductor packages over a single substrate, manufacturers can incorporate pre-made components into electronic devices and systems. Because the semiconductor packages include sophisticated functionality, electronic devices can be manufactured using cheaper components and a streamlined manufacturing process. The resulting devices are less likely to fail and less expensive to manufacture resulting in a lower cost for consumers.

[0040] FIGS. **3***a*-**3***c* show exemplary semiconductor packages. FIG. **3***a* illustrates further detail of DIP **64** mounted on PCB **52**. Semiconductor die **74** includes an active region containing analog or digital circuits implemented as active devices, passive devices, conductive layers, and dielectric layers formed within the die and are electrically interconnected according to the electrical design of the die. For example, the circuit can include one or more transistors, diodes, inductors, capacitors, resistors, and other circuit elements formed within the active region of semiconductor die **74**. Contact pads **76** are one or more layers of conductive material, such as aluminum (Al), copper (Cu), tin (Sn), nickel (Ni), gold (Au), or silver (Ag), and are electrically connected to the circuit elements formed within semiconductor die **74**. During assembly of DIP **64**, semiconductor die **74** is mounted to an intermediate carrier **78** using a gold-silicon eutectic layer or adhesive material such as thermal epoxy or epoxy resin. The package body includes an insulative packaging material such as polymer or ceramic. Conductor leads **80** and bond wires **82** provide electrical interconnect between semiconductor die **74** and PCB **52**. Encapsulant **84** is deposited over the package for environmental protection by preventing moisture and particles from entering the package and contaminating die **74** or bond wires **82**.

[0041] FIG. **3***b* illustrates further detail of BCC **62** mounted on PCB **52**. Semiconductor die **88** is mounted over carrier **90** using an underfill or epoxy-resin adhesive material **92**. Bond wires **94** provide first level packaging interconnect between contact pads **96** and **98**. Molding compound or encapsulant **100** is deposited over semiconductor die **88** and bond wires **94** to provide physical support and electrical isolation for the device. Contact pads **102** are formed over a surface of PCB **52** using a suitable metal deposition process such as electrolytic plating or electroless plating to prevent oxidation. Contact pads **102** are electrically connected to one or more conductive signal traces **54** in PCB **52**. Bumps **104** are formed between contact pads **98** of BCC **62** and contact pads **102** of PCB **52**.

[0042] In FIG. **3***c*, semiconductor die **58** is mounted face down to intermediate carrier **106** with a flip chip style first level packaging. Active region **108** of semiconductor die **58** contains analog or digital circuits implemented as active devices, passive devices, conductive layers, and dielectric layers formed according to the electrical design of the die. For example, the circuit can include one or more transistors, diodes, inductors, capacitors, resistors, and other circuit elements within active region **108**. Semiconductor die **58** is electrically and mechanically connected to carrier **106** through bumps **110**.

[0043] BGA **60** is electrically and mechanically connected to PCB **52** with a BGA style second level packaging using bumps **112**. Semiconductor die **58** is electrically connected to conductive signal traces **54** in PCB **52** through bumps **110**, signal lines **114**, and bumps **112**. A molding compound or encapsulant **116** is deposited over semiconductor die **58** and carrier **106** to provide physical support and electrical isolation for the device. The flip chip semiconductor device provides a short electrical conduction path from the active devices on semiconductor die **58** to conduction tracks on PCB **52** in order to reduce signal propagation distance, lower capacitance, and improve overall circuit performance. In another embodiment, the semiconductor die **58** can be mechanically and electrically connected directly to PCB **52** using flip chip style first level packaging without intermediate carrier **106**.

[0044] FIG. **4** illustrates a chip scale package **120** having substrate **122** and flipchip semiconductor die **124** mounted to surface **126** of the substrate using bumps **128**. The electrical interconnection between semiconductor die **124** and substrate **122** is made by way of bumps **128** and a plurality of conductive traces formed on active surface **130**. Bumps **128** are formed on contact pads on active surface **130** and electrically connected to interconnect sites **131** on substrate **122** in a solid-state fashion, that is, the bumps are thermo-mechanically connected to interconnect sites **131** by concurrently forcing the bumps against the interconnect sites and applying sufficient heat to deform the bump against the interconnect site without melting either the bump material or interconnect site material. The solid-state interconnect can provide for interconnect geometries in ranges less than 0.1 mm pitch. The solid-state bonds provide finer interconnect geometries with a high input/output (I/O) count than can be obtained using a melt-bond connection. Bumps **128** can also be reflowed to metallurgically and electrically connect to interconnect sites **131**.

[0045] A plurality of bumps **132** is formed over contact pads **133** on surface **126**. In this embodiment, semiconductor die **124** is located in a center region of substrate **122** and bumps **132** are arranged around a peripheral region of semiconductor die **124** to the edge of the substrate. An underfill material or epoxy-resin adhesive material **134** is deposited in the thin gap between substrate **122** and semiconductor die **124**. In one embodiment, the gap between substrate **122** and active surface **130** is less than about 0.025 mm. Substrate **122** includes a plurality of conductive traces formed on surface **126** to electrically connect bumps **128** and **132**. One or more of the conductive traces on substrate **122** can be formed as coplanar waveguides, in which ground lines are formed to run alongside the signal line on a planar dielectric material.

[0046] The dimensions of the various features can be selected to minimize the overall thickness of the chip scale package. Chip scale package **120** achieves miniaturization and high-speed operation by employing a flipchip interconnection between substrate **122** and semiconductor die **124**, and further by mounting the semiconductor die on the same side of the substrate as bumps **132**, which provide a second level interconnect. For example, the thickness of substrate **122** can be 0.1 mm, the height of semiconductor die **124** can be 0.18 mm, and the height of bumps **132** can be 0.3 mm with a 0.5 mm pitch, to yield an overall package height of approximately 0.4 mm. Accordingly, the combined thickness of semiconductor die **124** and the gap is less than or equal to the height of bumps **132** so that the effective die thickness is accommodated within the second level interconnect, and contributes nothing to the overall package thickness ("Z" direction miniaturization). With no bumps **132** within the footprint of semiconductor die **124**, the second level interconnect reliability is superior to that of conventional chip scale packages having bumps within the footprint of the die. Moreover, the length of the longest conductive trace between bumps **128** and bumps **132** is less that 1.0 mm, which provides enhanced electrical performance.

[0047] An optional ground plane **136** is formed over surface **138** of substrate **122**, opposite surface **126**. Ground plane **136** can be a continuous metal sheet, e.g., Cu, substantially covering surface **138**. One or more conductive vias **140** are formed through substrate **122** to electrically connect ground plane **136** through bumps **132** to a low-impedance ground point.

[0048] FIG. **5** shows an embodiment, continuing from FIG. **4**, with a semiconductor die **150** mounted to surface **138** of substrate **122** with a die attach adhesive. Semiconductor die **150** has contact pads **152** electrically connected to conductive traces **153** formed on surface **138** and conductive vias **140** with bond wires **154**. Semiconductor die **150** is thus electrically connected to semiconductor die **124** and bumps **132**. An encapsulant **156** is deposited over surface **138**, semiconductor die **150**, and bond wires **154**.

[0049] FIG. **6** shows an embodiment, continuing from FIG. **4**, with a flipchip semiconductor die **160** mounted to surface **138** of substrate **122** using bump **162**. Bumps **162** are electrically connected to conductive traces or redistribution layer (RDL) **163** formed on surface **138** and conductive vias **140**. Semiconductor die **160** is thus electrically connected to semiconductor die **124** and bumps **132**. An underfill material or epoxy-resin adhesive material **164** is deposited between substrate **122** and semiconductor die **160**.

[0050] FIGS. **7***a*-**7***e* illustrate, in relation to FIGS. **2** and **3***a*-**3***c*, a process of dissipating heat from a thin PoP mounted to a substrate. FIG. **7***a* shows a substrate **170** having electrically conductive layers or traces **172** formed over and through the substrate to provide electrical interconnect according to the electrical design and function of semiconductor die **190** and **200**. The conductive layers and traces **172** extend across surface **174** of substrate **170** and through the substrate between opposing surfaces **174** and **176** with electrical separation by insulating material **178**. A plurality of bumps **180** is formed over contact pads **182** on surface **174** and electrically connected to conductive traces **172**.

[0051] A semiconductor die **190** has an active surface **192** containing analog or digital circuits implemented as active devices, passive devices, conductive layers, and dielectric layers formed within the die and electrically interconnected according to the electrical design and function of the die. For example, the circuit can include one or more transistors, diodes, and other circuit elements formed within active surface **192** to implement analog circuits or digital circuits, such as digital signal processor (DSP), central processing unit (CPU), ASIC, memory, or other signal processing circuit. Semiconductor die **190** can also contain IPDs, such as inductors, capacitors, and resistors, for RF signal processing. A plurality of bumps **194** is formed over contact pads **195** on active surface **192** for electrical interconnect.

[0052] A semiconductor die **200** has an active surface **202** containing analog or digital circuits implemented as active devices, passive devices, conductive layers, and dielectric layers formed within the die and electrically interconnected according to the electrical design and function of the die. For example, the circuit can include one or more transistors, diodes, and other circuit elements formed within active surface **202** to implement analog circuits or digital circuits, such as DSP, CPU, ASIC, memory, or other signal processing circuit. Semiconductor die **200** can also contain IPDs, such as inductors, capacitors, and resistors, for RF signal processing. A plurality of bumps **204** is formed over contact pads **205** on active surface **202**, outside a footprint of semiconductor die **190**, for electrical interconnect.

[0053] Semiconductor die **200** is mounted to semiconductor die **190**. Semiconductor die **190** and **200** are mounted to a central region **206** of surface **174**, as shown in FIG. **7***b*. Bumps **194** are electrically connected to contact pads **208** and conductive traces **172** on substrate **170** using reflow or solid-state bonding. Likewise, bumps **204** are electrically connected to contact pads **210** and conductive traces **172** on substrate **170** using reflow or solid-state bonding. In solid-state bonding, bumps **194** and **204** are thermo-mechanically connected to the contact pads by concurrently forcing the bumps against the contact pads and applying sufficient heat to deform the bumps against the pads without melting either the bump material or pad material. An underfill material or epoxy-resin adhesive material **212** is deposited between substrate **170** and semiconductor die **190** and **200**.

[0054] Semiconductor die **190** has a smaller footprint as compared to semiconductor die **200** so that bumps **204** can be electrically connected to contact pads **210** around a peripheral region of semiconductor die **190**. Semiconductor die **190** and **200** constitute an ultra thin package-on-package (PoP) arrangement mounted to substrate **170** between bumps **180**. The combined height of semiconductor die **190** and **200** with bumps **194** and **204** is less than or equal to the height of bumps **180**.

[0055] FIG. **7***c* shows substrate or PCB **224** with thermal conduction channels **226** routed through the PCB to conductive plane **225**. The PoP and substrate structure **214** is inverted and positioned over thermal conduction channels **226**. A thermal interface material (TIM) **220** is deposited over back surface **222** of semiconductor die **200**, opposite semiconductor die **190**. Alternatively, TIM **220** can be applied to thermal conduction channel **226** of PCB **224**. The PoP and substrate structure **214** is mounted to thermal conduction channels **226** of PCB **224** with TIM **220**, as shown in FIG. **7***d*. Bumps **180** are electrically connected to contact pads **227** on PCB **224**. In one embodiment, semiconductor die **200** is a DSP, CPU, or other heat-generating signal processing die, and semiconductor die **190** is a memory supporting the DSP or CPU. Alternatively, semiconductor die **190** is the DSP, CPU, or other heat-generating signal processing die, and semiconductor die **200** is the memory supporting the DSP or CPU. In either case, semiconductor die **190** and **200** can operate with, for example, up to 5 watts of power consumption. Semiconductor die **190** and **200** are electrically connected through bumps **194** and **204**, and conductive layers or traces **172** to PCB **224**.

[0056] The heat generated by semiconductor die **190** and **200** is dissipated through TIM **220** and thermal conduction channels **226** to conductive plane **225**. Conductive plane **225** can be securely mounted to equipment or chassis for further heat distribution. Conductive plane **225** can also serve as a ground plane for semiconductor die **190** and **200** to the equipment, as well as heat distribution. The PoP and substrate structure **214** can handle high power devices and provide effective heat dissipation with a high I/O count, all in an ultra thin PoP package.

[0057] In FIG. **7***e*, an optional ground plane **228** is formed over surface **176** of substrate **170**. Ground plane **228** can be a continuous metal sheet, e.g., Cu, substantially covering surface **176**. Ground plane **228** is electrically connected through conductive traces **172** and bumps **180** to a low-impedance ground point. Alternatively, a semiconductor die can be mounted to surface **176**, as shown in FIGS. **5** and **6**.

[0058] FIGS. **8***a*-**8***d* illustrate, in relation to FIGS. **2** and **3***a*-**3***c*, another process of dissipating heat from a thin PoP mounted to a substrate. FIG. **8***a* shows a substrate **230** having electrically conductive layers or traces **232** formed over and through the substrate to provide electrical interconnect according to the electrical design and function of semiconductor die **250** and **260**. The conductive layers and traces **232** extend across substrate **230** and through the substrate

between surface **234** and opposing surface **236** with electrical separation by insulating layer **238**. A plurality of bumps **240** is formed over contact pads **242** on surface **234** of substrate **230** and electrically connected to conductive traces **232**.

[0059] A semiconductor die **250** has an active surface **252** containing analog or digital circuits implemented as active devices, passive devices, conductive layers, and dielectric layers formed within the die and electrically interconnected according to the electrical design and function of the die. For example, the circuit can include one or more transistors, diodes, and other circuit elements formed within active surface **252** to implement analog circuits or digital circuits, such as DSP, CPU, ASIC, memory, or other signal processing circuit. Semiconductor die **250** can also contain IPDs, such as inductors, capacitors, and resistors, for RF signal processing. A plurality of bumps **254** is formed over contact pads **256** on active surface **252** for electrical interconnect.

[0060] A plurality of vias is formed through semiconductor die **250** using mechanical drilling, laser drilling, or deep reactive ion etching (DRIE). The vias are filled with Al, Cu, Sn, Ni, Au, Ag, titanium (Ti), tungsten (W), polysilicon, or other suitable electrically conductive material using electrolytic plating, electroless plating process, or other suitable metal deposition process to form z-direction conductive through silicon vias (TSV) **258**.

[0061] A semiconductor die **260** has an active surface **262** containing analog or digital circuits implemented as active devices, passive devices, conductive layers, and dielectric layers formed within the die and electrically interconnected according to the electrical design and function of the die. For example, the circuit can include one or more transistors, diodes, and other circuit elements formed within active surface **262** to implement analog circuits or digital circuits, such as DSP, CPU, ASIC, memory, or other signal processing circuit. Semiconductor die **260** can also contain IPDs, such as inductors, capacitors, and resistors, for RF signal processing. A plurality of bumps **264** is formed over contact pads **265** on active surface **262** for electrical interconnect.

[0062] Semiconductor die **250** is mounted to a central region **266** of surface **234**, as shown in FIG. **8***b*. Bumps **254** are electrically connected to contact pads **268** and conductive traces **232** on substrate **230** using reflow or solid-state bonding. Semiconductor die **260** is mounted to semiconductor die **250** with bumps **264** electrically connected to conductive TSV **258** using reflow or solid-state bonding. Semiconductor die **260** is further electrically connected through conductive TSV **258** and bumps **254** to contact pads **268** and conductive traces **232** on substrate **230**. In solid-state bonding, bumps **254** and **264** are thermo-mechanically connected to the contact pads by concurrently forcing the bumps against the contact pads and applying sufficient heat to deform the bumps against the pads without melting either the bump material or pad material. Semiconductor die **260** has a substantially similar footprint as semiconductor die **250**. An underfill material or epoxy-resin adhesive material **270** is deposited between substrate **230** and semiconductor die **250** and **260**.

[0063] Semiconductor die **250** and **260** constitute an ultra thin PoP arrangement mounted to substrate **230** between bumps **240**. The combined height of semiconductor die **250** and **260** with bumps **254** and **264** is less than or equal to the height of bumps **240**.

[0064] FIG. **8***c* shows substrate or PCB **280** with thermal conduction channels **282** routed through the PCB to conductive plane **285**. The PoP and substrate structure **274** is inverted and TIM **276** is deposited over back surface **278** of semiconductor die **260**, opposite semiconductor die **250**. Alternatively, TIM **276** can be applied to thermal conduction channel **282** of PCB **224**. The PoP and substrate structure **274** is mounted to thermal conduction channels **282** of PCB **280** with TIM **276**, as shown in FIG. **8***d*. Bumps **240** are electrically connected to contact pads **284** on PCB **280**. In one embodiment, semiconductor die **260** is a DSP, CPU, or other heat-generating signal processing die, and semiconductor die **250** is a memory supporting the DSP or CPU. Alternatively, semiconductor die **250** is the DSP, CPU, or other heat-generating signal processing die, and semiconductor die **260** is the memory supporting the DSP or CPU. In either case, semiconductor die **250** and **260** can operate with, for example, up to 5 watts of power consumption. Semiconductor die **250** and **260** are electrically connected through conductive TSV **258**, bumps **264**, **254**, and **240**, and conductive layers or traces **232** to PCB **280**.

[0065] The heat generated by semiconductor die **250** and **260** is dissipated through TIM **276** and thermal conduction channels **282** to conductive plane **285** for heat dissipation. Conductive plane **285** can be securely mounted to equipment or chassis for further heat distribution. Conductive plane **285** can also serve as a ground plane for semiconductor die **250** and **260** to the equipment, as well as heat distribution. The PoP and substrate structure **274** can handle high power devices and provide effective heat dissipation with a high I/O count, all in an ultra thin PoP package.

[0066] In another embodiment, FIG. **9***a* shows a substrate **290** having electrically conductive layers or traces **292** formed over and through the substrate to provide electrical interconnect according to the electrical design and function of semiconductor die **310**. The conductive layers and traces **292** extend across substrate **290** and through the substrate between surface **294** and opposing surface **296** with electrical separation by insulating layer **298**. A plurality of bumps **300** is formed over contact pads **302** on surface **294** of substrate **290** and electrically connected to conductive traces **292**.

[0067] A semiconductor die **310** has an active surface **312** containing analog or digital circuits implemented as active devices, passive devices, conductive layers, and dielectric layers formed within the die and electrically interconnected according to the electrical design and function of the die. For example, the circuit can include one or more transistors, diodes, and other circuit elements formed within active surface **312** to implement analog circuits or digital circuits, such as DSP, CPU, ASIC, memory, or other signal processing circuit. Semiconductor die **310** can also contain IPDs, such as inductors, capacitors, and resistors, for RF signal processing. A plurality of bumps **314** is formed over contact pads **315** on active surface **312** for electrical interconnect. A second semiconductor die can be mounted to semiconductor die **310**, similar to FIG. **8***a*.

[0068] A TIM **316** is formed over back surface **318** of semiconductor die **310** to aid with distribution and dissipation of heat generated by the semiconductor die. TIM **316** can be aluminum oxide, zinc oxide, boron nitride, or pulverized silver. An optional heat distributing layer **320** is mounted over TIM **316**. Heat distributing layer **320** can be Cu, Al, or other material with high thermal conductivity.

[0069] Semiconductor die **310** with heat distributing layer **320** is mounted to a central region **322** of surface **294**, as shown in FIG. **9***b*. Bumps **314** are electrically connected to contact pads **324** and conductive traces **292** on substrate **290**

using reflow or solid-state bonding. In solid-state bonding, bumps **314** are thermo-mechanically connected to the contact pads by concurrently forcing the bumps against the contact pads and applying sufficient heat to deform the bumps against the pads without melting either the bump material or pad material. An underfill material or epoxy-resin adhesive material **326** is deposited between substrate **290** and semiconductor die **310**. The combined height of semiconductor die **310** with bumps **314**, TIM **316**, and heat distributing layer **320** is less than or equal to the height of bumps **300**.

[0070] FIG. **9***c* shows substrate or PCB **330** with thermal conduction channels **332** routed through the PCB to conductive plane **336**. The semiconductor die and substrate structure **328** is inverted and mounted to PCB **330** with heat distributing layer **320** contacting thermal conduction channels **332**. Bumps **300** are electrically connected to contact pads **334** on PCB **330**, as shown in FIG. **9***d*. In one embodiment, semiconductor die **310** is a DSP, CPU, or other heat-generating signal processing die. In this case, semiconductor die **310** can operate with, for example, up to 5 watts of power consumption. Semiconductor die **310** is electrically connected through bumps **314** and **300** to conductive layers or traces **292** of PCB **330**.

[0071] The heat generated by semiconductor die **310** is dissipated through TIM **316**, heat distributing layer **320**, and thermal conduction channels **332** to conductive plane **336** of PCB **330**. The semiconductor die and substrate structure **328** can handle high power devices and provide effective heat dissipation with a high I/O count, all in an ultra thin PoP package.

[0072] FIG. **10***a*-**10***e* shows an embodiment with a substrate **340** having electrically conductive layers or traces **342** formed over and through the substrate to provide electrical interconnect according to the electrical design and function of semiconductor die **360** and **370**. The conductive layers and traces **342** extend across substrate **340** and through the substrate between surface **344** and opposing surface **346** with electrical separation by insulating layer **348**. A plurality of bumps **350** is formed over contact pads **352** on surface **344** of substrate **340** and electrically connected to conductive traces **342**.

[0073] A semiconductor die **360** has an active surface **362** containing analog or digital circuits implemented as active devices, passive devices, conductive layers, and dielectric layers formed within the die and electrically interconnected according to the electrical design and function of the die. For example, the circuit can include one or more transistors, diodes, and other circuit elements formed within active surface **362** to implement analog circuits or digital circuits, such as DSP, CPU, ASIC, memory, or other signal processing circuit. Semiconductor die **360** can also contain IPDs, such as inductors, capacitors, and resistors, for RF signal processing. A plurality of bumps **364** is formed over contact pads **366** on active surface **362** for electrical interconnect.

[0074] A plurality of vias is formed through semiconductor die **360** using mechanical drilling, laser drilling, or DRIE. The vias are filled with Al, Cu, Sn, Ni, Au, Ag, Ti, W, polysilicon, or other suitable electrically conductive material using electrolytic plating, electroless plating process, or other suitable metal deposition process to form z-direction conductive TSV **368**.

[0075] A semiconductor die **370** has an active surface **372** containing analog or digital circuits implemented as active devices, passive devices, conductive layers, and dielectric layers formed within the die and electrically interconnected according to the electrical design and function of the die. For example, the circuit can include one or more transistors, diodes, and other circuit elements formed within active surface **372** to implement analog circuits or digital circuits, such as DSP, CPU, ASIC, memory, or other signal processing circuit. Semiconductor die **370** can also contain IPDs, such as inductors, capacitors, and resistors, for RF signal processing. A plurality of contact pads **374** is formed on active surface **372**. Semiconductor die **370** is mounted to the back surface of semiconductor die **360** and electrically connected through conductive TSV **368** to bumps **364**. Semiconductor die **360** and **370** can be similar size or different size, similar to FIGS. **7***a* and **8***a*.

[0076] Semiconductor die **360** and **370** are mounted to central region **376** of surface **344** of PCB **340**, as shown in FIG. **10***b*. Bumps **364** are electrically connected to contact pads **378** and conductive traces **342** on substrate **340** using reflow or solid-state bonding. In solid-state bonding, bumps **364** are thermo-mechanically connected to the contact pads by concurrently forcing the bumps against the contact pads and applying sufficient heat to deform the bumps against the pads without melting either the bump material or pad material. An underfill material or epoxy-resin adhesive material **380** is deposited between substrate **340** and semiconductor die **360** and **370**. In one embodiment, semiconductor die **370** is a DSP, CPU, or other heat-generating signal processing die, and semiconductor die **360** is a memory supporting the DSP or CPU. Alternatively, semiconductor die **360** is the DSP, CPU, or other heat-generating signal processing die, and semiconductor die **370** is the memory supporting the DSP or CPU. In either case, semiconductor die **360** or **370** can operate with, for example, up to 5 watts of power consumption. The combined height of semiconductor die **360** with bumps **364** and semiconductor die **370** is less than or equal to the height of bumps **350**.

[0077] FIG. **10***c* shows substrate or PCB **384** with contact pads **386** connected to signal trace lines routed over surface **388** and within the layers of the PCB. Thermal conduction channels **390** are routed through PCB **384** to conductive plane **392** formed over surface **394** of the PCB opposite surface **388**. A TIM **396** is deposited over surface **388** of PCB **340** in the area designated for mounting semiconductor die **360** and **370** to aid with distribution and dissipation of heat generated by the semiconductor die. TIM **396** can be aluminum oxide, zinc oxide, boron nitride, or pulverized silver. Alternatively, TIM **396** can be solder paste, heat-conductive polymer material, b-stage adhesive, thermal pad, or other thermal coupling agent.

[0078] FIG. **10***d* shows an embodiment with TIM **396** deposited over the back surface of semiconductor die **370**.

[0079] The semiconductor die and substrate structure **398** is inverted and mounted to substrate or PCB **340**. The back surface of semiconductor die **370**, opposite active surface **372**, is thermally bonded to surface **388** of PCB **340** with TIM **396**, as shown in FIG. **10***e*. In the case of solder paste, TIM **396** can be reflowed to molten state and then solidified to thermally bond the back surface of semiconductor die **370** to surface **388** of PCB **340**. In the case of polymer, thermal pad, or b-stage material, the material can be cured to thermally bond the back surface of semiconductor die **370** to surface **388** of PCB **340**. Bumps **350** are electrically connected to contact pads **386**. Semiconductor die **360** and **370** are elec-

trically connected through conductive TSV **368** and bumps **364** and **350** to conductive layers or traces **342** of PCB **340**.

[0080] The heat generated by semiconductor die **360** and **370** is dissipated through TIM **396** and thermal conduction channels **390** to conductive plane **392** of PCB **340**. Conductive plane **392** can be securely mounted to equipment or chassis for further heat distribution. Alternatively, a heat sink can be mounted to conductive plane **392**. Conductive plane **392** can also serve as a ground plane for semiconductor die **360** and **370** to the equipment, as well as heat distribution. The semiconductor die and substrate structure **398** can handle high power devices and provide effective heat dissipation with a high I/O count, all in an ultra thin PoP package.

[0081] FIG. **11** shows an embodiment, similar to FIG. **10***e*, with solder resist or masking layer **400**. Masking layer **400** includes bump openings for bumps **350** and bumps **364** in an interior region of semiconductor die **360**. The portion of masking layer **400** around bumps **364** around a perimeter of semiconductor die **364** is open. Masking layer **400** acts as resin dam to contain underfill material **380**.

[0082] While one or more embodiments of the present invention have been illustrated in detail, the skilled artisan will appreciate that modifications and adaptations to those embodiments may be made without departing from the scope of the present invention as set forth in the following claims.

1. A method of making a semiconductor device, comprising:
providing a first substrate having a central region;
forming a plurality of bumps around a periphery of the central region of the first substrate;
mounting a first semiconductor die to the central region of the first substrate;
mounting a second semiconductor die to the first semiconductor die over the central region of the first substrate, wherein a height of the first and second semiconductor die is less than or equal to a height of the bumps;
providing a second substrate having a thermal conduction channel;
mounting a surface of the second semiconductor die opposite the first semiconductor die to the thermal conductive channel of the second substrate with a thermal interface material; and
electrically connecting the bumps to contact pads on the second substrate.

2. The method of claim **1**, further including forming a conductive plane over a surface of the second substrate thermally coupled to the thermal conduction channel.

3. The method of claim **1**, wherein the second semiconductor die has a larger footprint than the first semiconductor die.

4. The method of claim **1**, further including forming a plurality of conductive vias through the first semiconductor die.

5. The method of claim **1**, further including depositing an underfill material between the first substrate and first and second semiconductor die.

6. The method of claim **1**, further including forming a masking layer over the first substrate.

7. A method of making a semiconductor device, comprising:
providing a first substrate;
mounting a first semiconductor die to the first substrate;
mounting a second semiconductor die to the first semiconductor die over the first substrate;
forming a plurality of bumps over the first substrate around a periphery of the first and second semiconductor die, wherein a height of the first and second semiconductor die is less than or equal to a height of the bumps;
providing a second substrate having a thermal conduction channel; and
mounting a surface of the second semiconductor die opposite the first semiconductor die to the thermal conductive channel of the second substrate with a thermal interface material.

8. The method of claim **7**, wherein the thermal interface material includes solder paste, heat-conductive polymer material, or b-stage adhesive.

9. The method of claim **7**, further including electrically connecting the bumps to contact pads on the second substrate.

10. The method of claim **7**, further including forming a plurality of conductive vias through the first semiconductor die.

11. The method of claim **7**, further including:
forming a masking layer over the first substrate; and
depositing an underfill material between the first substrate and first and second semiconductor die, the underfill material being contained by the masking layer.

12. The method of claim **7**, further including forming a conductive plane over a surface of the second substrate thermally coupled to the thermal conduction channel.

13. The method of claim **7**, wherein the second semiconductor die has a larger footprint than the first semiconductor die.

14. A method of making a semiconductor device, comprising:
providing a first substrate;
mounting a first semiconductor die to the first substrate;
forming a plurality of bumps over the first substrate around a periphery of the first semiconductor die, wherein a height of the first semiconductor die is less than or equal to a height of the bumps;
providing a second substrate having a thermal conduction channel; and
mounting a surface of the first semiconductor die to the thermal conductive channel of the second substrate with a thermal interface material.

15. The method of claim **14**, further including mounting a second semiconductor die to the first semiconductor die.

16. The method of claim **14**, further including forming a conductive plane over a surface of the second substrate thermally coupled to the thermal conduction channel.

17. The method of claim **14**, further including electrically connecting the bumps to contact pads on the second substrate.

18. The method of claim **14**, further including depositing an underfill material between the first substrate and first semiconductor die.

19. The method of claim **14**, wherein the second semiconductor die has a larger footprint than the first semiconductor die.

20. A semiconductor device, comprising:
a first substrate;
a first semiconductor die mounted to the first substrate;
a second semiconductor die mounted to the first semiconductor die over the first substrate;
a plurality of bumps formed over the first substrate around a periphery of the first and second semiconductor die, wherein a height of the first and second semiconductor die is less than or equal to a height of the bumps; and

a second substrate having a thermal conduction channel, wherein a surface of the second semiconductor die opposite the first semiconductor die is mounted to the thermal conductive channel of the second substrate with a thermal interface material.

21. The semiconductor device of claim **20**, wherein the bumps are electrically connected to contact pads on the second substrate.

22. The semiconductor device of claim **20**, wherein the first and second semiconductor die are mounted to a central region of the first substrate.

23. The semiconductor device of claim **20**, further including a thermal interface layer formed over the surface of the second semiconductor die.

24. The semiconductor device of claim **20**, further including a conductive plane formed over a surface of the second substrate.

25. The semiconductor device of claim **20**, wherein the second semiconductor die has a larger footprint than the first semiconductor die.

* * * * *