US007057896B2

(12) **United States Patent**
Matsuo et al.

(10) **Patent No.: US 7,057,896 B2**
(45) **Date of Patent: Jun. 6, 2006**

(54) **POWER MODULE AND PRODUCTION METHOD THEREOF**

(75) Inventors: **Mitsuhiro Matsuo**, Osaka (JP); **Hiroyuki Handa**, Hirakata (JP); **Koji Yoshida**, Ikoma (JP); **Satoshi Ikeda**, Suita (JP); **Yoshihiro Takeshima**, Nara (JP)

(73) Assignee: **Matsushita Electric Industrial Co., Ltd.**, Osaka (JP)

(*) Notice: Subject to any disclaimer, the term of this patent is extended or adjusted under 35 U.S.C. 154(b) by 290 days.

(21) Appl. No.: **10/639,195**

(22) Filed: **Aug. 11, 2003**

(65) **Prior Publication Data**

US 2004/0070946 A1 Apr. 15, 2004

(30) **Foreign Application Priority Data**

Aug. 21, 2002 (JP) 2002-241235

(51) **Int. Cl.**
H05K 7/20 (2006.01)

(52) **U.S. Cl.** **361/704**; 257/706; 257/712; 361/708; 361/710; 361/713; 361/719

(58) **Field of Classification Search** 257/706–707, 257/712–713; 361/704–710, 712–722
See application file for complete search history.

(56) **References Cited**

U.S. PATENT DOCUMENTS

4,712,160	A *	12/1987	Sato et al.	361/710
5,172,213	A *	12/1992	Zimmerman	257/796
5,398,160	A *	3/1995	Umeda	361/707
5,608,610	A *	3/1997	Brzezinski	361/704
6,201,696	B1 *	3/2001	Shimizu et al.	361/704
6,282,092	B1 *	8/2001	Okamoto et al.	361/704
6,473,304	B1 *	10/2002	Stevens	361/704

FOREIGN PATENT DOCUMENTS

JP	03278596	12/1991
JP	09246433	9/1997

* cited by examiner

Primary Examiner—Gregory D Thompson
(74) *Attorney, Agent, or Firm*—Sheridan Ross P.C.

(57) **ABSTRACT**

A power module of the present invention mounts electronic components and comprises a circuit board that constitutes an electric power conversion circuit along with the above-mentioned electronic components; a heat sink; and a member with insulation characteristics and high thermal conductivity, which is disposed between plural devices with high heating value among the above-mentioned electronic components and the above-mentioned heat sink, embeds at least part of each of the above-mentioned plural devices with high heating value therein and transfers heat from the above-mentioned plural devices with high heating value to the above-mentioned heat sink.

5 Claims, 14 Drawing Sheets

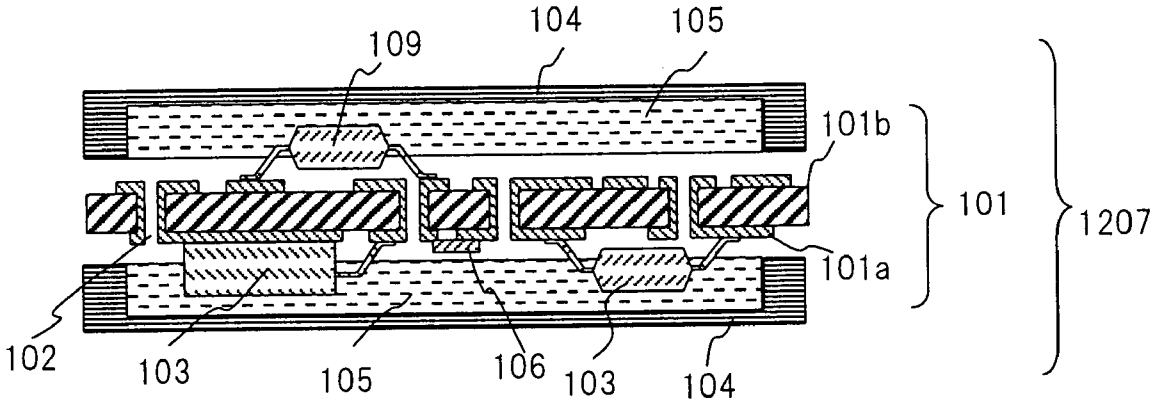

FIG. 1

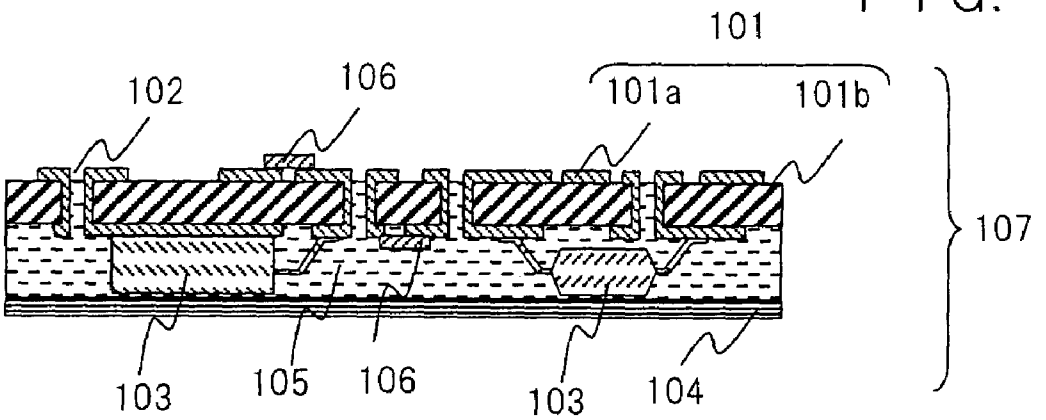

FIG. 2

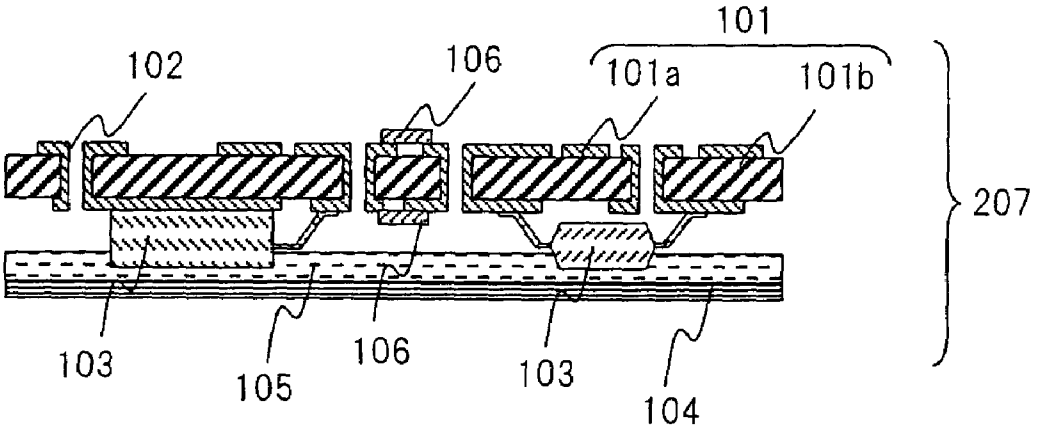

FIG. 3

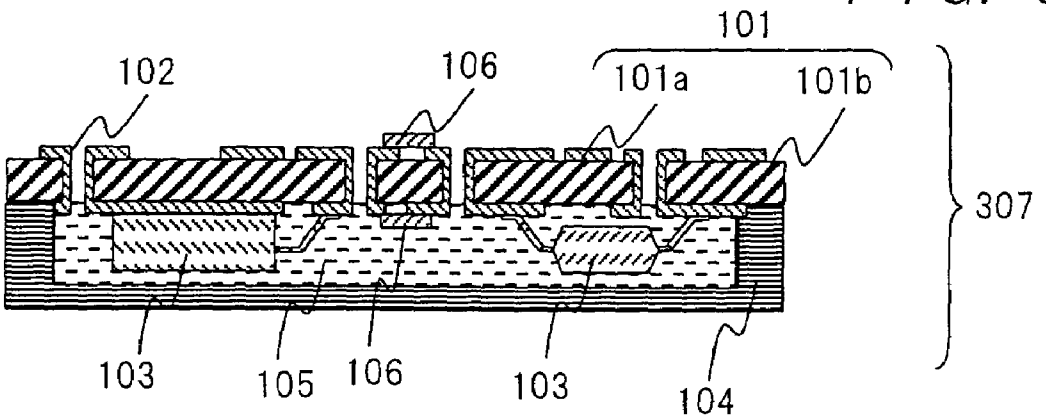

FIG. 4

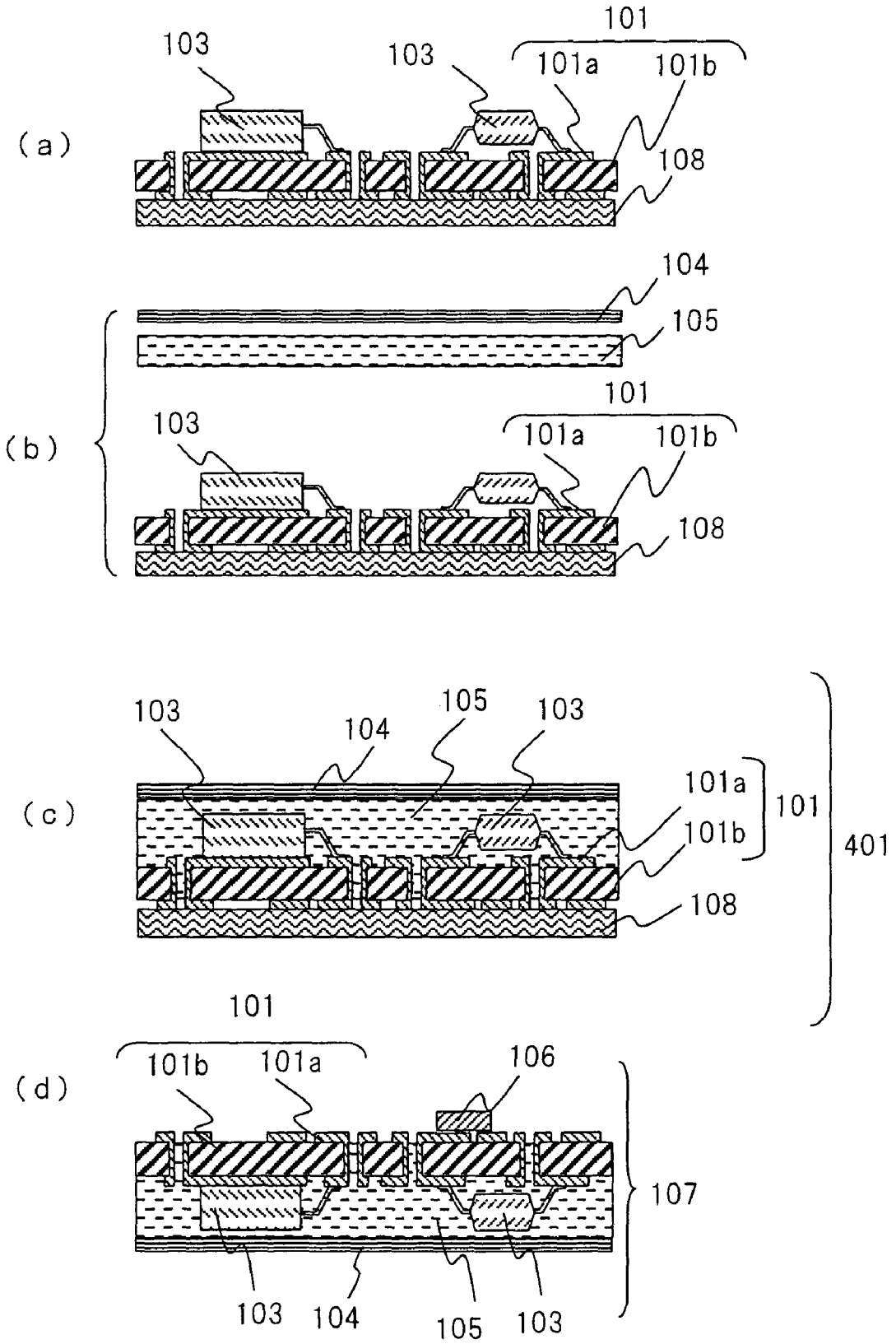
(a)
103
103
101
101a
101b
108
(b)
104
105
101
103
101a
101b
108
(c)
103
104
105
103
101a
101
101b
401
108
(d)
101
101b
101a
106
107
103
104
105
103

F I G. 5

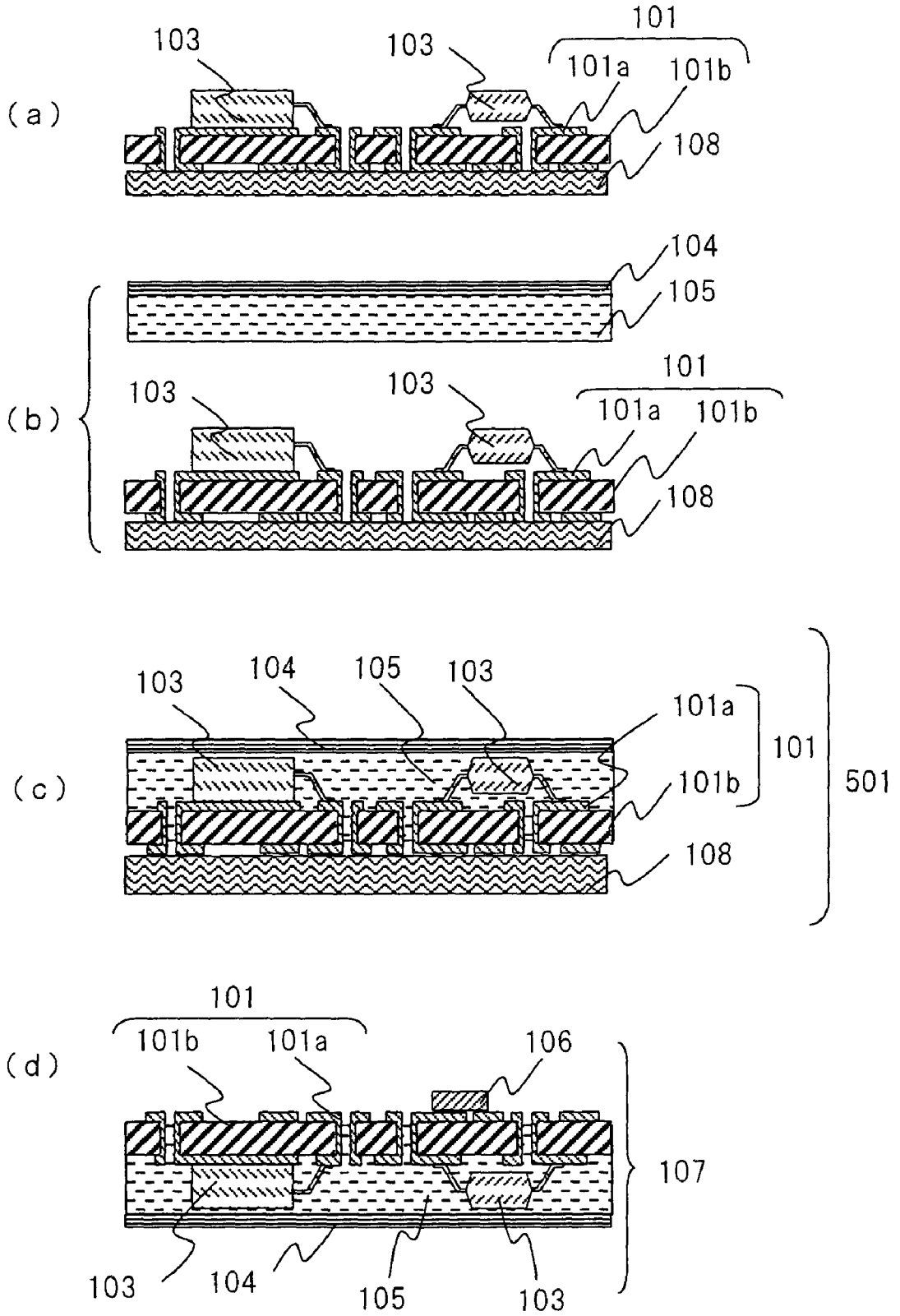
(a)
103
103
101
101a
101b
108
(b)
104
105
103
103
101
101a
101b
108
(c)
103
104
105
103
101a
101
101b
501
108
(d)
101
101b
101a
106
107
103
104
105
103

FIG. 6

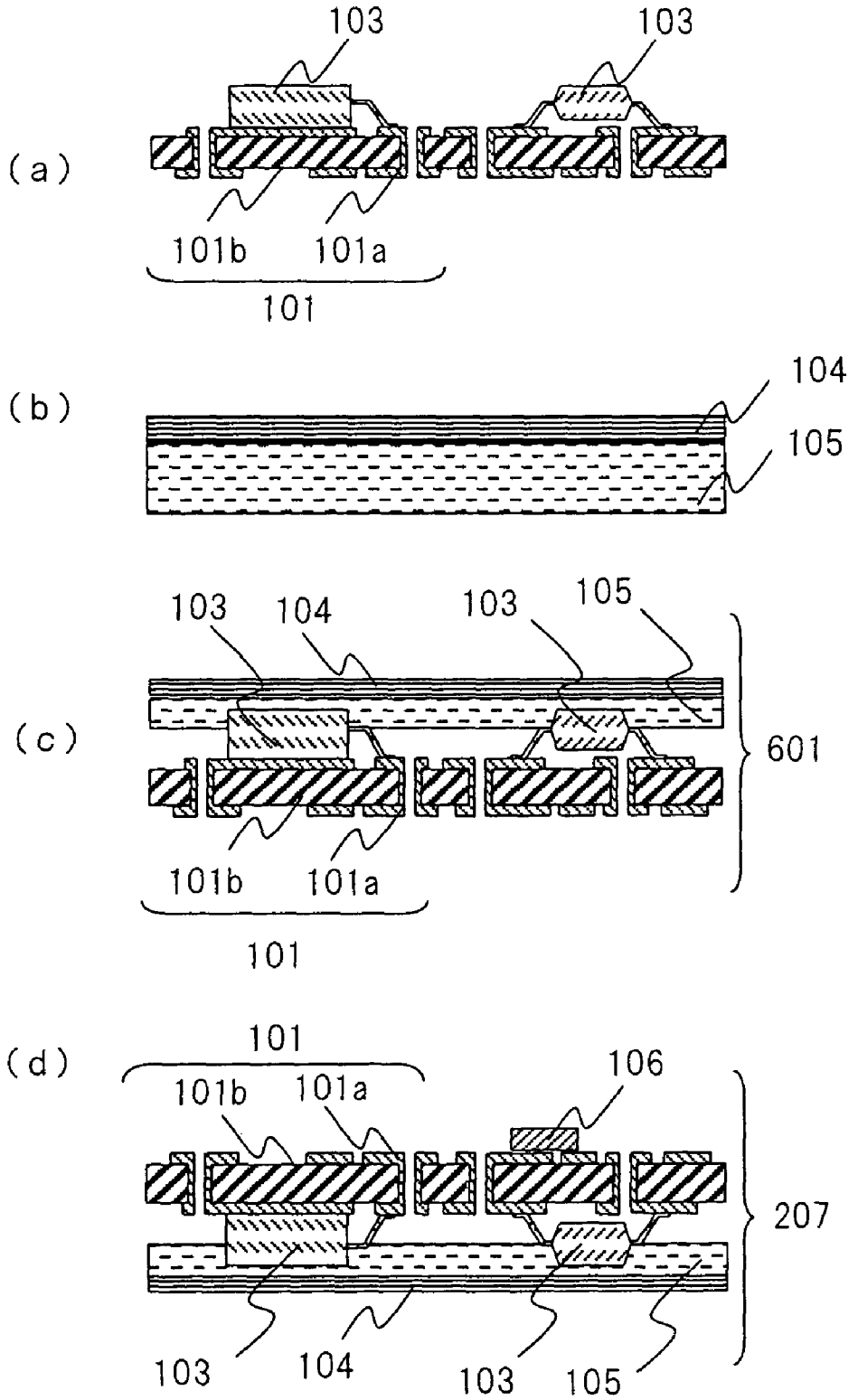
(a)
103
103
101b
101a
101
(b)
104
105
(c)
103
104
103
105
601
101b
101a
101
(d)
101
101b
101a
106
207
103
104
103
105

FIG. 7

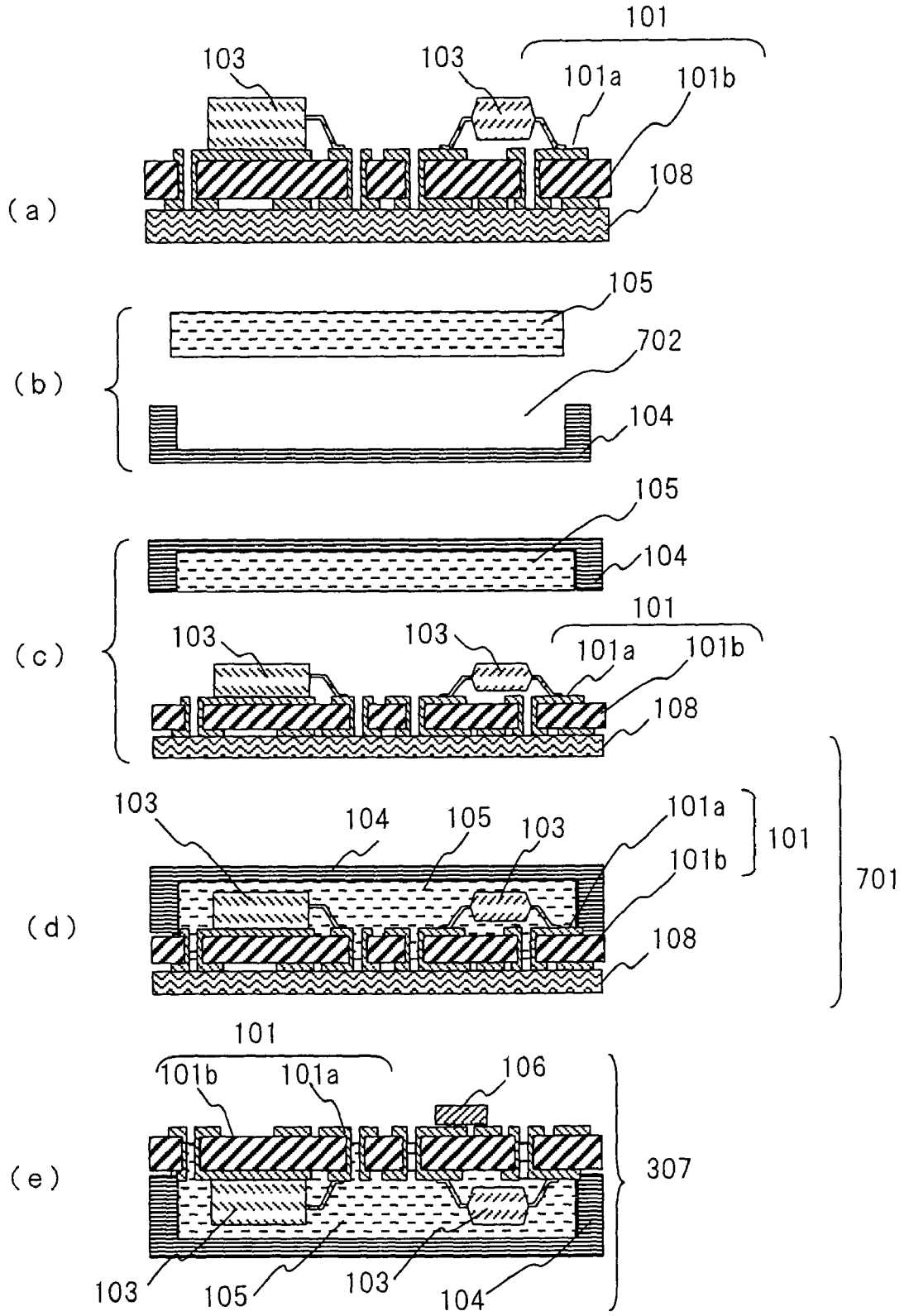
101
103
103
101a
101b
108
(a)
105
702
(b)
104
105
104
(c)
101
103
103
101a
101b
108
103
104
105
103
101a
101
101b
701
(d)
108
101
101b
101a
106
(e)
307
103
105
103
104

FIG. 8

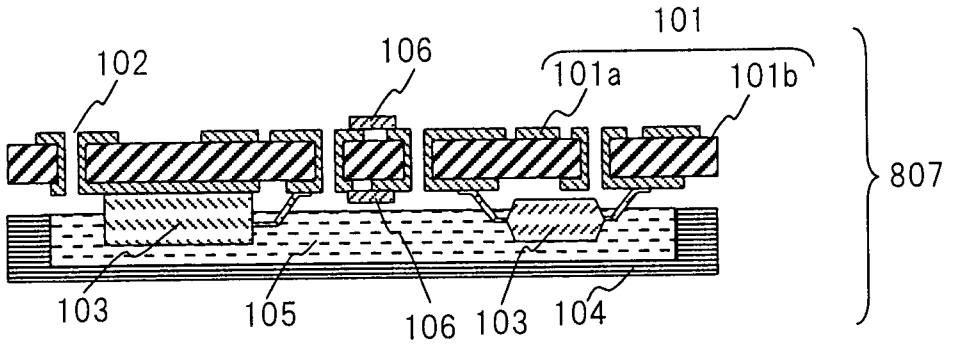

FIG. 9

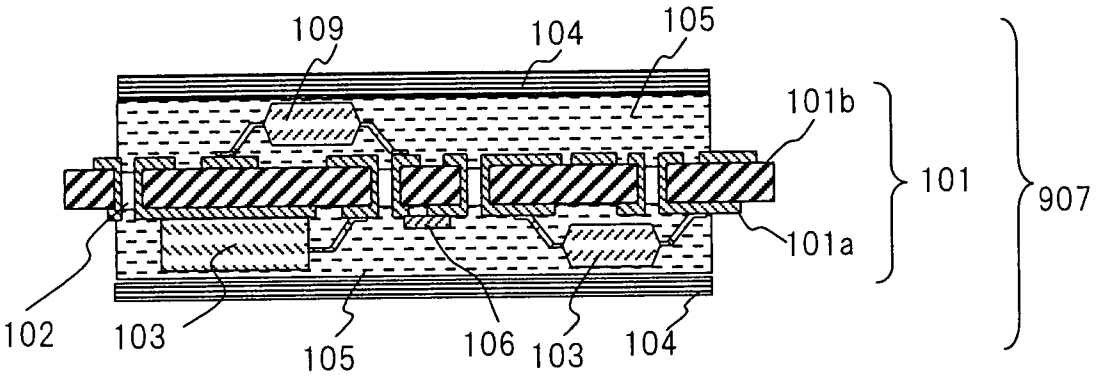

FIG. 10

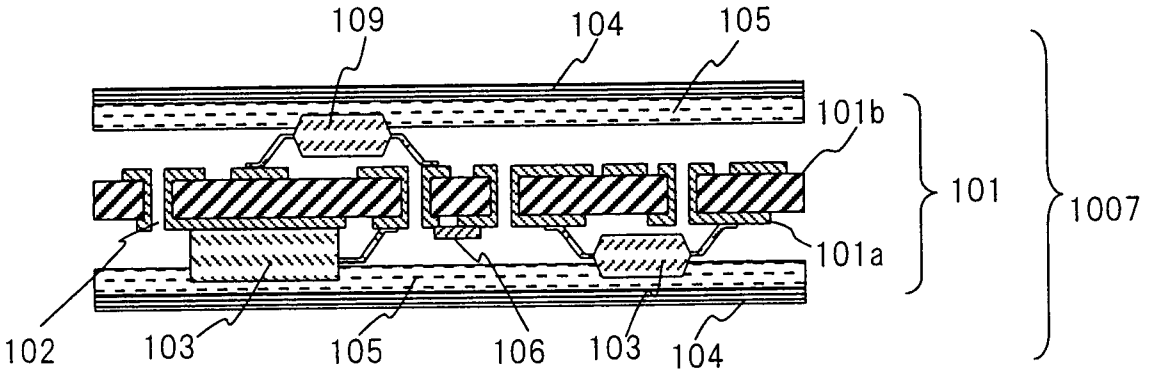

FIG. 11

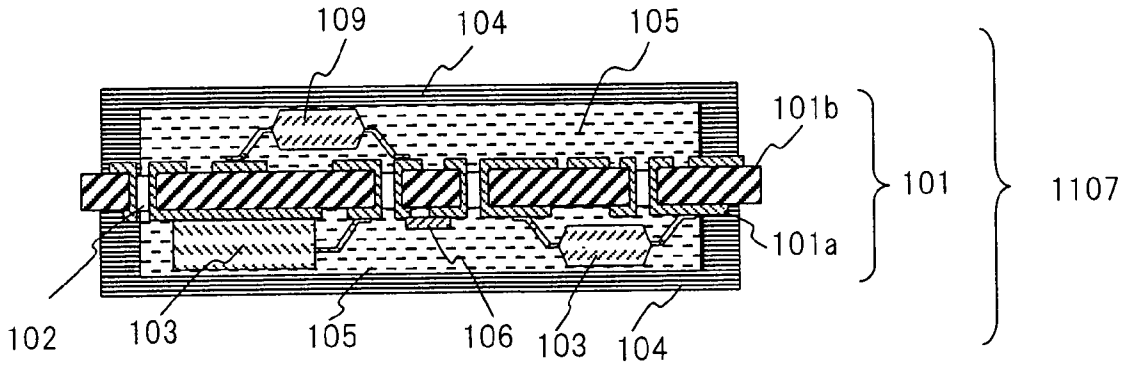
109
104
105
101b
101
1107
101a
102
103
105
106
103
104

FIG. 12

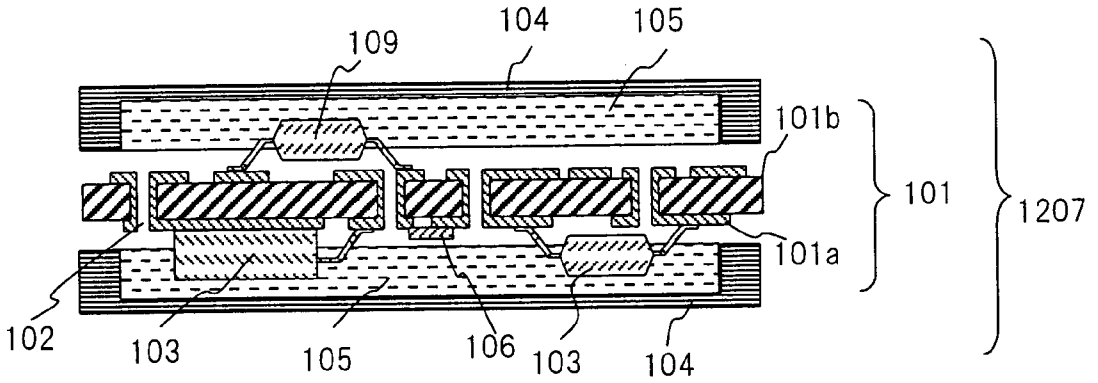
104
105
109
101b
101
1207
101a
102
103
105
106
103
104

FIG. 13

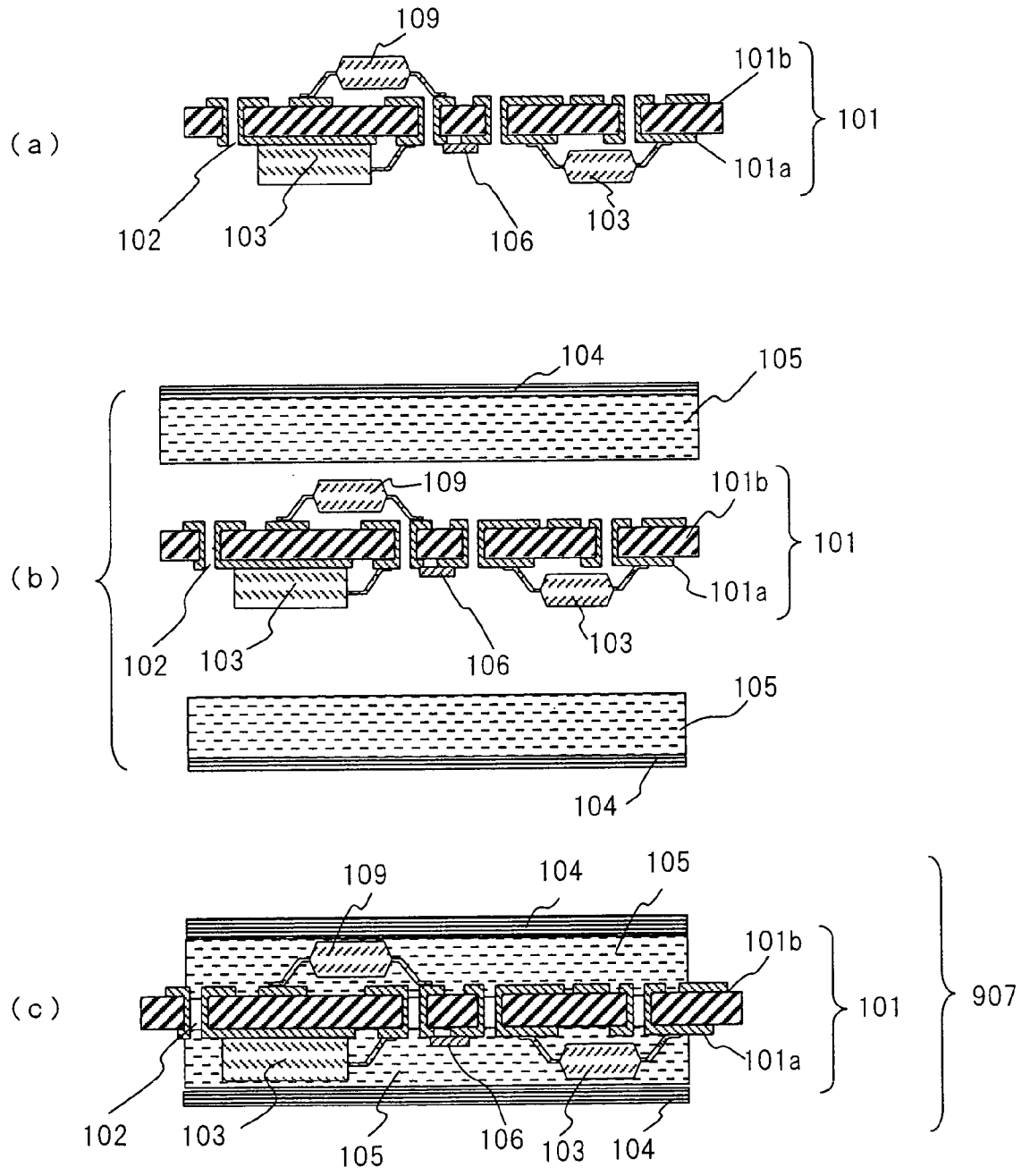
(a)
109
101b
101
101a
102
103
106
103
(b)
104
105
109
101b
101
101a
102
103
106
103
105
104
(c)
109
104
105
101b
101
907
101a
102
103
105
106
103
104

FIG. 14

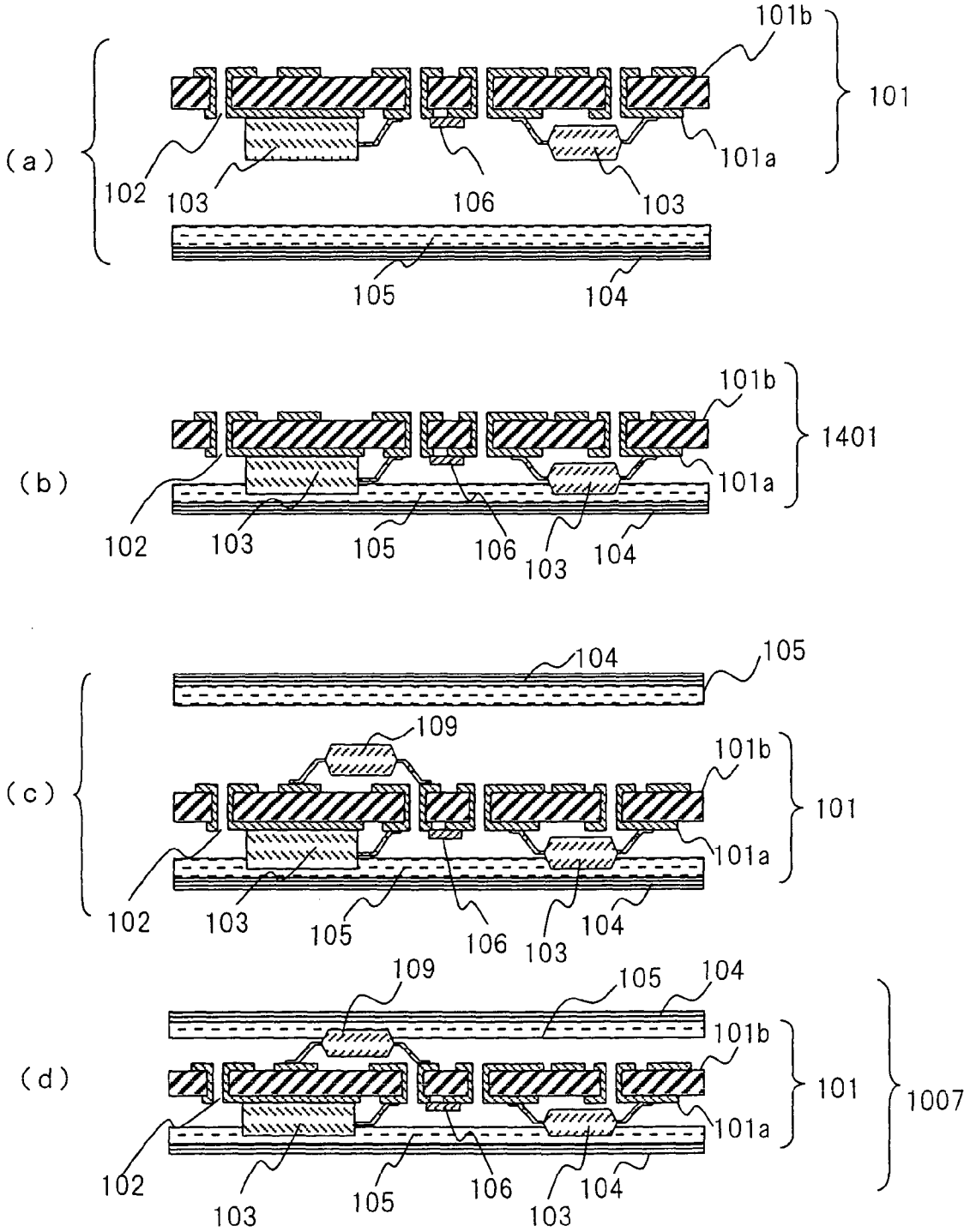
(a)
101b
101
101a
102
103
106
103
105
104
(b)
101b
1401
101a
102
103
105
106
103
104
(c)
104
105
109
101b
101
101a
102
103
105
106
103
104
(d)
109
105
104
101b
101
1007
101a
102
103
105
106
103
104

FIG. 15

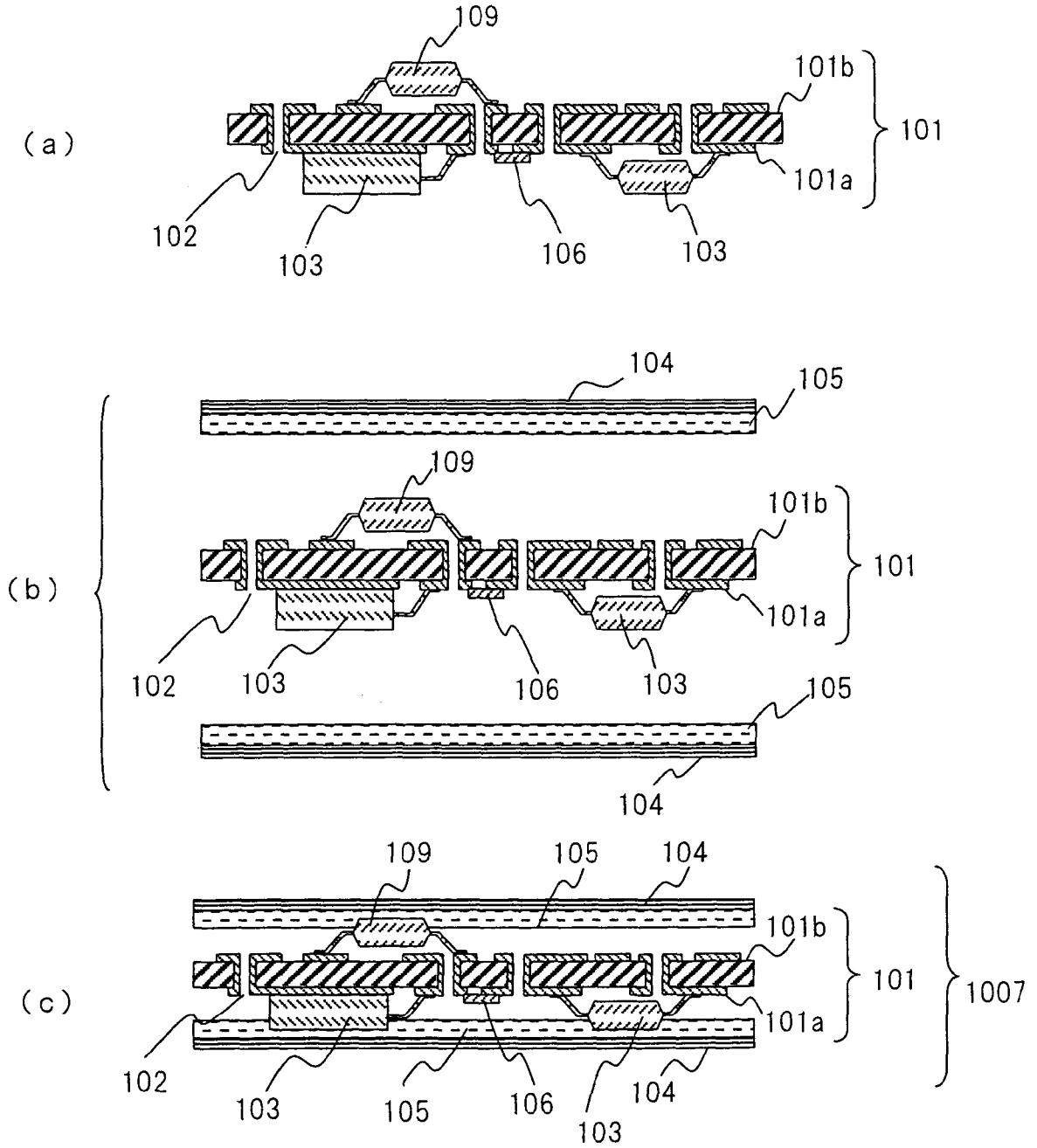
(a)
109
101b
101
101a
102
103
106
103
(b)
104
105
109
101b
101
101a
102
103
106
103
105
104
(c)
109
105
104
101b
101
1007
101a
102
103
105
106
104
103

FIG. 16

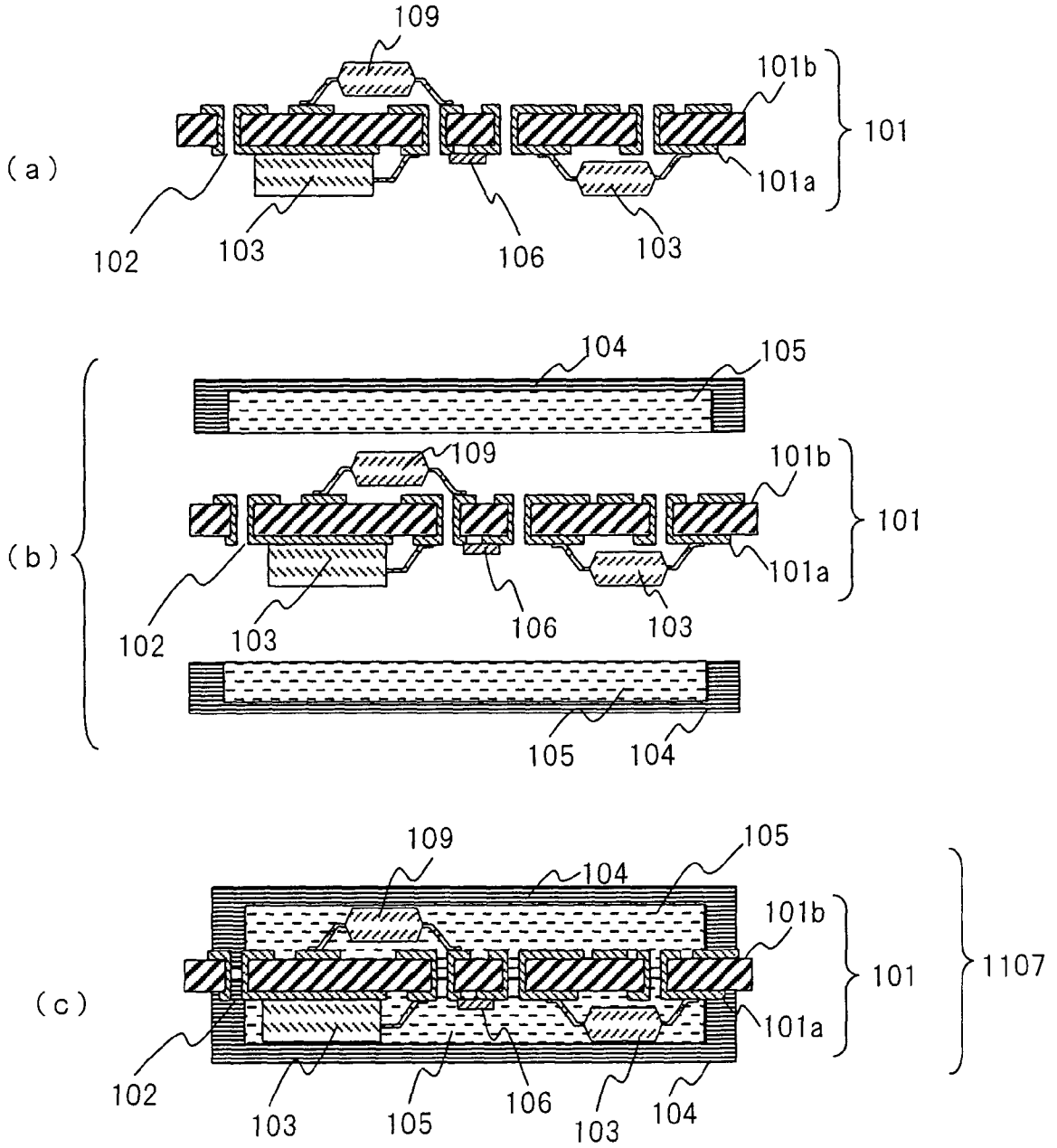
(a)
109
101b
101
101a
102
103
106
103
(b)
104
105
109
101b
101
101a
102
103
106
103
105
104
(c)
109
105
104
101b
101
1107
101a
102
103
105
106
103
104

FIG. 17

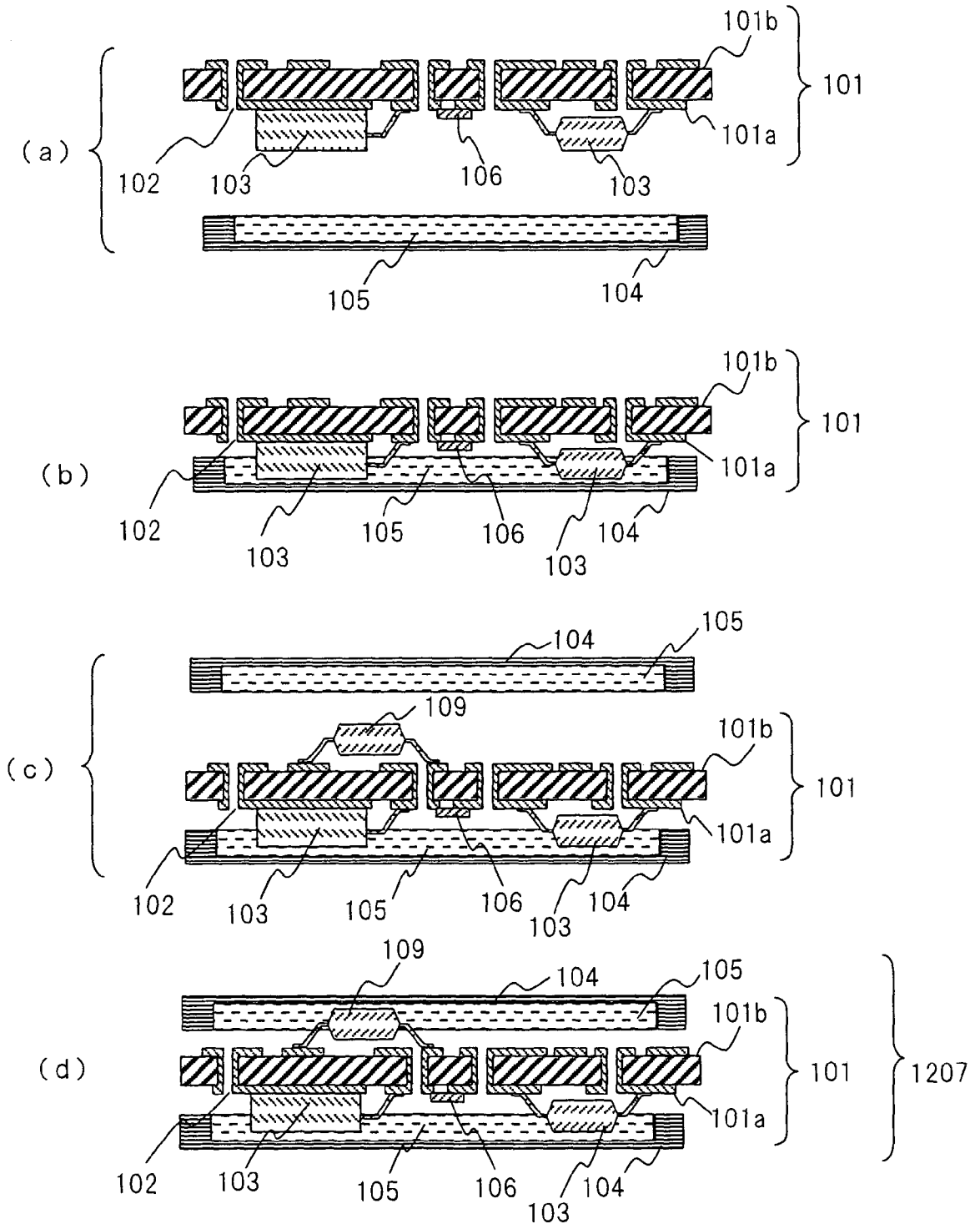
(a)
101b
101
101a
102
103
106
103
105
104
(b)
101b
101
101a
102
103
105
106
104
103
(c)
105
104
109
101b
101
101a
102
103
105
106
104
103
(d)
109
104
105
101b
101
1207
101a
102
103
105
106
104
103

FIG. 18

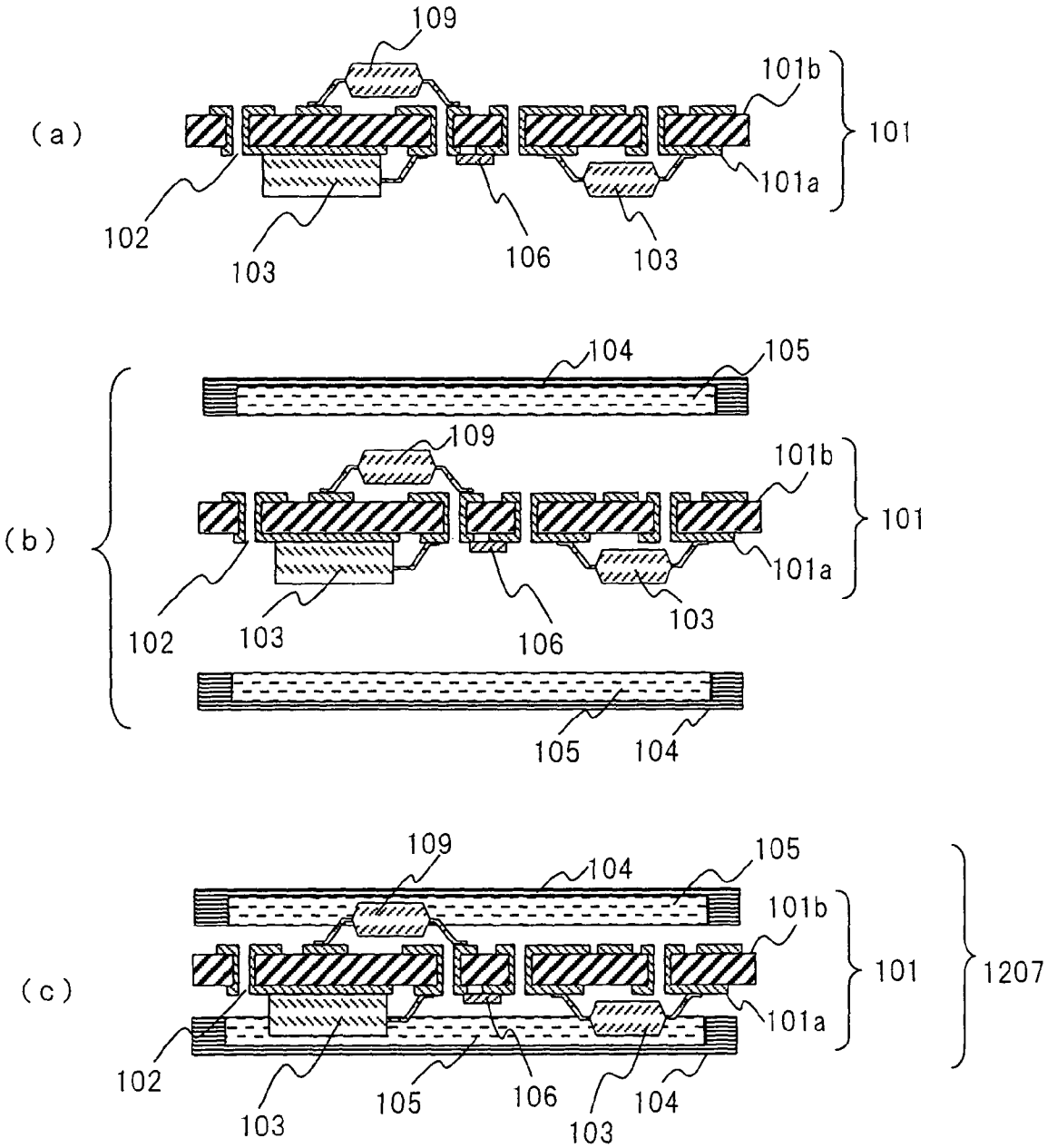
(a)
109
101b
101
101a
102
103
106
103
(b)
104
105
109
101b
101
101a
102
103
106
103
105
104
(c)
109
104
105
101b
101
1207
101a
102
103
105
106
104
103

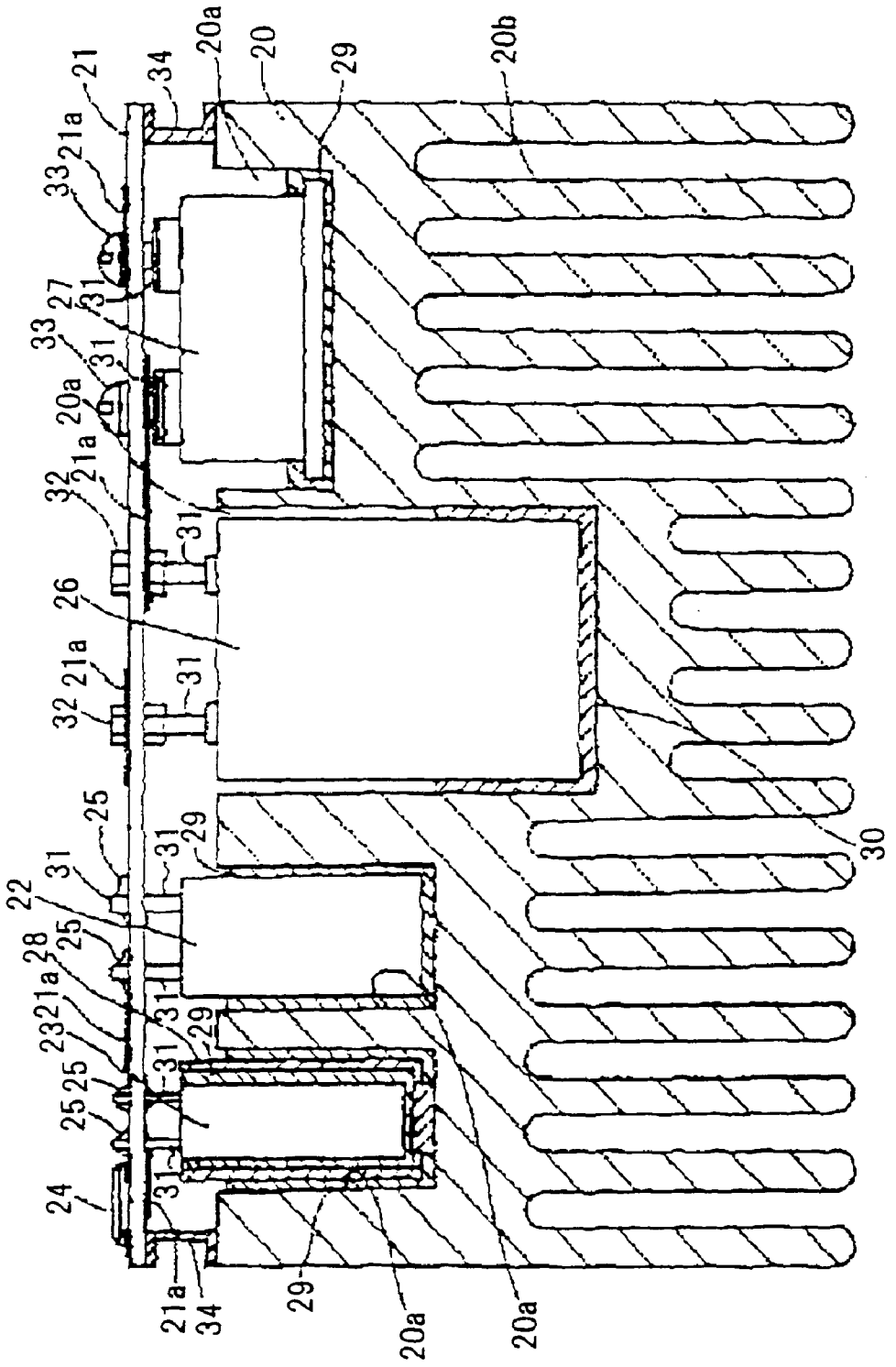
21
34
20a
20
29
20b
21a
33
27
31
33
31
20a
21a
32
31
26
21a
32
31
25
31
29
22
25
28
21a
23
31
29
25
25
24
31
21a
34
29
20a
20a
30

FIG. 19

POWER MODULE AND PRODUCTION METHOD THEREOF

BACKGROUND OF THE INVENTION

The present invention relates to an on-board type power module.

Recently, in developing electronic equipment that meets demand toward miniaturization in the market, measures for heat dissipation of heating components mounted on a board at high density (ex. electronic components such as semiconductor device) have increasingly become important. Especially in a power module, since insufficient heat dissipation of components can impair reliability of the components, measures for heat dissipation are extremely important in order to suppress temperature rise due to heat generation of power conversion devices mounted at high density and the like.

As measures for heat dissipation, prior art power modules have adopted a forced air-cooling system with fan or a heat transfer cooling system wherein a high thermal conductive heat sink is pressed onto heating components, thereby to efficiently transfer heat from the heating components to the heat sink for cooling them.

Various electronic components requiring heat dissipation such as MOSFET (MOS (metal-oxide semiconductor) field-effect transistor), transformer, choke, IC for power supply circuit and the like are mounted on a circuit board of a power module. These electronic components vary in shape and height, thereby to generate difference in level among them. There are variations in heights of the components themselves as well as mounted heights of the components on the circuit board. For that reason, even if a heat sink is pressed onto plural heating components, it is difficult to bring all components into coherent with the heat sink evenly. Therefore, it is necessary to accommodate difference in level and height among the heating components and bring the electronic components requiring heat dissipation into coherent with the heat sink so as to ensure heat transfer between them.

In order to solve this problem, Patent Publication No. 2536657 describes a prior art electronic apparatus that comprises a heat sink having depressed portions for accommodating components mounted on a multi-layer board depending on positions and heights of the components. The prior art electronic apparatus disclosed in Patent Publication No. 2536657 will be described below. FIG. **19** is a sectional view of the circuit board disclosed in the above-mentioned Patent Publication.

In FIG. **19**, conductors **21***a* are provided with a circuit board **21** in a predetermined pattern. A resistance **22** as an electronic component with high heating value, a cement resistance **23** with especially high heating value, an electrolytic capacitor **26** as an electronic component with low heating value, a power module **27** with high heating value and the like are fixed to the circuit board **21** by soldering **25**. A reference numeral **20** denotes a base made of aluminum die cast. The base **20** has depressed portions **20***a* for inserting the components **22**, **23**, **26**, **27**, respectively, depending on position, height and shape thereof so as to make space between the base **20** and each component substantially same.

A copper cover **28** having the same shape as outline of the cement resistance **23** lies between the cement resistance **23** and the depressed portion **20***a*. A high thermal conductive resin **29** is filled in each space (depressed portion **20***a*) between the resistance **22**, cement resistance **23** and power module **27**, respectively, all of which have a high heating value, and the base **20**. A heat-insulating resin **30** is filled in the space (depressed portion **20***a*) between the electrolytic capacitor **26** with low heating value and the base **20**.

A reference numeral **31** denotes a terminal part of each component, a reference numeral **32** denotes a nut for electrically bonding the terminal part **31** to the conductor **21***a* of the circuit board **21**, a reference numeral **33** denotes a fastening screw for electrically connecting the terminal part **31** to the conductor **21***a* of the circuit board **21**, and a reference numeral **34** denotes a holding member for holding the circuit board **21** on the base **20**.

In other words, the prior art electronic apparatus enables efficient heat transfer, since both the tall and short components with high heating value are adhered to the heat sink evenly.

In the prior art example, however, there causes a problem of complicating configuration of the heat sink. The heat sink must be designed so as to have convexocancave that correspond to any difference in level ranging from large to minute differences in response to the components of various heights that are mounted on the circuit board. A mold for the heat sink with complicated shape is expensive. In the case of highly complicated shaped heat sink, aluminum die cast drawn from the mold needs to be processed thereafter. Thus, it is impossible to design the heat sink until the pattern of the circuit board and components attached thereto have been determined, and production of the mold for the complicated heat sink takes a long time, thereby to cause delay in going on the market. Moreover, once the shape of heat sink has been established, it becomes difficult to change electronic components on the multi-layer board or their positions. These problems have resulted in prolongation of development period and increase in production cost.

An object of the present invention is to provide a power module that has structural characteristics including good heat dissipation, high thermal resistance reliability, low-cost and high productivity.

Another object of the present invention is to provide a power module that efficiently takes heat generated from components of various heights, which are mounted on the circuit board, by use of a multipurpose heat sink or a simple-shaped heat sink.

Another object of the present invention is to provide a lightweight power module due to miniaturization and weight saving of heat dissipation member.

BRIEF SUMMARY OF THE INVENTION

In order to solve the problem, the present invention has a following configuration. A power module in accordance with the present invention from one aspect is a power module that comprises a circuit board that mounts electronic components and constitutes an electric power conversion circuit along with the above-mentioned electronic components; a heat sink; and a member with insulation characteristics and high thermal conductivity, which is disposed between plural devices with high heating value among the above-mentioned electronic components and the above-mentioned heat sink, embeds at least part of each of the above-mentioned plural devices with high heating value therein and transfers heat from the above-mentioned plural devices with high heating value to the above-mentioned heat sink.

The present invention has the effect of achieving a power module that efficiently transfers heat generated from the mounted electronic components requiring heat dissipation to

the heat sink via the high heat conductive member (such as resin material). Hence, temperature rise of the components can be suppressed.

According to the present invention, since there is no need to form convexoconcave on the surface of the heat sink depending on shape of the components mounted to the multi-layer board, a cheap multipurpose heat sink (for example, one side has a heat radiating fin and the opposite side is flat) or a simple-shaped heat sink (for example, a shape of folded aluminum plate) can be utilized. Since it is unnecessary to subject the heat sink to any special process, a cheap power module with high productivity can be achieved.

By fixing the cheap heat sink to the heating components having various heights via the high thermal conductive member (such as resin material), heat generated from the components having various heights can be transferred to the heat sink efficiently with high reliability (the components and the high thermal conductive member, as well as the high thermal conductive member and the heat sink are brought into coherent with each other certainly).

There is no need to change shape of the heat sink depending on location, shape and size of the components mounted to the circuit board. Since heat sink design or mold manufacturing do not take long time, development of power module can be facilitated.

The present invention has the effect of achieving a power module that has constitutional characteristics including good heat dissipation, high thermal resistance reliability, low cost and high productivity.

The present invention has the effect of achieving a power module that efficiently takes heat occurring in the components having various heights mounted to the circuit board by use of a multipurpose heat sink or a simple-shaped heat sink.

A power module in accordance with the present invention from another aspect is a power module wherein the above-mentioned member provides space with respect to the above-mentioned circuit board at the part that is not adhered to the above-mentioned electronic components and remains substantially uniform in thickness at the part.

As the electronic components become miniaturized and their mounting becomes densified, there can cause a problem that voids remain at the boundary area between the member and the board, and the electronic components with high heating value do not stick fast to the member adequately due to the voids. According to the present invention, space between the member and the circuit board exists and therefore there is no fear of leaving voids. The present invention has the effect of ensuring adhesiveness between the electronic components with high heating value and the member, thereby to achieve a power module with high reliability.

A power module in accordance with the present invention from another aspect is a power module wherein the above-mentioned heat sink has a depressed portion and the above-mentioned member is filled in the above-mentioned depressed portion.

By flowing the unhardened member (such as resin) into the depressed portion, the heating components can be embedded in the member, while preventing the member from flowing out.

A power module in accordance with the present invention from another aspect is a power module wherein the above-mentioned member has thermosetting resin and inorganic filler as chief ingredients.

By bringing a thermosetting resin composition with high thermal conductivity as the member into coherent with the electronic components, thermal resistance of the electronic components requiring heat dissipation can be reduced. Adhering the high thermal conductive member to the heat sink and unifying them can reduce contact thermal resistance between the member and the heat sink. Hence, it is possible to provide a power module that is excellent in heat dissipation.

A power module in accordance with the present invention from another aspect is a power module wherein a short component in height is mounted to the side of the above-mentioned circuit board, which is opposed to the above-mentioned heat sink.

Hence, it is possible to achieve a thin power module having good heat radiating characteristic. Reducing variation of the components in height makes interval between each component and the heat sink substantially uniform, thereby to enable eliminating deviation in heat dissipation.

A power module in accordance with the present invention from another aspect is a power module wherein both sides of the above-mentioned circuit board have the above-mentioned heat sink and the above-mentioned member respectively. The present invention has the effect of achieving a power module with good heat dissipation at both sides.

A production method of a power module in accordance with the present invention from another aspect is a production method that comprises a mounting step of mounting electronic components to at least a first side; a laminating step of forming a laminated body wherein an unhardened member with insulation characteristics and high thermal conductivity and a heat sink are laminated on the above-mentioned first side of the above-mentioned circuit board; and an adhering step of pressurizing and heating the above-mentioned laminated body, hardening the above-mentioned member and adhering the above-mentioned circuit board, the above-mentioned member and the above-mentioned heat sink to each other.

The present invention has the effect of achieving a power module that has constitutional characteristics including good heat dissipation, high thermal resistance reliability, low cost and high productivity.

The present invention has the effect of achieving a power module that efficiently takes heat occurring in the components having various heights mounted to the circuit board by use of a multipurpose heat sink or a simple-shaped heat sink.

A production method of a power module in accordance with the present invention from another aspect is a production method that comprises a mounting step of mounting electronic components to both sides of a circuit board; a laminating step of forming a laminated body wherein an unhardened member with insulation characteristics and high thermal conductivity and a heat sink are laminated on both sides of the above-mentioned circuit board simultaneously; and an adhering step of pressurizing and heating the above-mentioned laminated body, hardening the above-mentioned member and adhering the above-mentioned circuit board, the above-mentioned member and the above-mentioned heat sink to each other.

The present invention has the effect of achieving a method for producing the power module with good heat dissipation characteristic and high thermal resistance reliability, in which the electronic components are mounted to both sides of the circuit board, at low cost and less steps.

A production method of a power module in accordance with the present invention from another aspect is a production method wherein, in the above-mentioned adhering step, the above-mentioned member provides space with respect to the above-mentioned circuit board at the part that is not

adhered to the above-mentioned electronic components and remains uniform in thickness at the part.

Since air remaining within the thermal conductive member comes out of the space between the thermal conductive member and the surface of the circuit board absolutely, no void remains within the member and the electronic components and the thermal conductive member stick fast to each other evenly. The present invention has the effect of achieving a production method with high reliability of power module that efficiently takes heat occurring in the components having various heights, which are mounted to the circuit board.

By applying the present invention to both sides of the circuit board, simultaneous lamination on both sides of the circuit board can be carried out with high reliability.

A production method of a power module in accordance with the present invention from another aspect is a production method, in which the above-mentioned circuit board is a multi-layer board, further comprising a second adhering step of adhering an adhesive thin film to a second side of the above-mentioned circuit board before the above-mentioned adhering step, and a removing step of removing the above-mentioned thin film after the above-mentioned adhering step.

The unhardened member (such as resin) can be prevented from flowing out through the through hole of the multi-layer board.

A production method of a power module in accordance with the present invention from another aspect is a production method that further comprises a second mounting step of mounting a component to the above-mentioned second side of the above-mentioned circuit board after the above-mentioned removing step.

A production method of a power module in accordance with the present invention from another aspect is a production method wherein the above-mentioned heat sink has a depressed portion in the side opposed to the above-mentioned circuit board, and in the above-mentioned laminating step, the above-mentioned unhardened member is filled in the above-mentioned depressed portion and a laminated body wherein the above-mentioned member and the above-mentioned heat sink are laminated is formed on the above-mentioned first side of the above-mentioned circuit board.

The heating components can be embedded in the member, while preventing the member from flowing out.

The novel features of the invention are set forth with particularity in the appended claims. The invention as to both structure and content, and other objects and features thereof will best be understood from the detailed description when considered in connection with the accompanying drawings.

BRIEF DESCRIPTION OF THE DRAWINGS

FIG. **1** is a sectional view showing configuration of a power module in accordance with a first embodiment of the present invention.

FIG. **2** is a sectional view showing configuration of a power module in accordance with a second embodiment of the present invention.

FIG. **3** is a sectional view showing configuration of a power module in accordance with a third embodiment of the present invention.

FIG. **4** is a sectional view by step showing a production method of a power module in accordance with a fourth embodiment of the present invention.

FIG. **5** is a sectional view by step showing a production method of a power module in accordance with a fifth embodiment of the present invention.

FIG. **6** is a sectional view by step showing a production method of a power module in accordance with a sixth embodiment of the present invention.

FIG. **7** is a sectional view by step showing a production method of a power module in accordance with a seventh embodiment of the present invention.

FIG. **8** is a sectional view showing configuration of a power module in accordance with an eighth embodiment of the present invention.

FIG. **9** is a sectional view showing configuration of a power module in accordance with a ninth embodiment of the present invention.

FIG. **10** is a sectional view showing configuration of a power module in accordance with a tenth embodiment of the present invention.

FIG. **11** is a sectional view showing configuration of a power module in accordance with an eleventh embodiment of the present invention.

FIG. **12** is a sectional view showing configuration of a power module in accordance with a twelfth embodiment of the present invention.

FIG. **13** is a sectional view by step showing a production method of a power module in accordance with a thirteenth embodiment of the present invention.

FIG. **14** is a sectional view by step showing a production method of a power module in accordance with a fourteenth embodiment of the present invention.

FIG. **15** is a sectional view by step showing a production method of a power module in accordance with a fifteenth embodiment of the present invention.

FIG. **16** is a sectional view by step showing a production method of a power module in accordance with a sixteenth embodiment of the present invention.

FIG. **17** is a sectional view by step showing a production method of a power module in accordance with a seventeenth embodiment of the present invention.

FIG. **18** is a sectional view by step showing a production method of a power module in accordance with an eighteenth embodiment of the present invention.

FIG. **19** is a sectional view of a circuit board in accordance with a conventional example.

Part or All of the drawings are drawn schematically for diagrammatic representation and it should be considered that they do not necessarily reflect relative size and position of components shown therein.

DETAILED DESCRIPTION OF THE INVENTION

Embodiments that specifically show the best mode for conducting the present invention will be described below with reference to figures.

First Embodiment

A power module in accordance with a first embodiment will be described referring to FIG. **1**.

FIG. **1** is a sectional view showing configuration of the power module in accordance with the first embodiment of the present invention. In FIG. **1**, a reference numeral **107** denotes the power module in accordance with the first embodiment of the present invention. The power module **107** comprises a multi-layer board **101** with a through hole **102**, electronic components requiring heat dissipation **103**

(each having an arbitrary different height), a heat sink **104**, a high thermal conductive member **105** and electronic components **106**.

The power module of this embodiment consists of three members including the multi-layer board **101**, the high thermal conductive member **105** and the heat sink **104**. The electronic components **103** and **106** are mounted to an insulating board **101***b* of the multi-layer board **101**. The electronic components requiring heat dissipation **103** such as an electric power conversion circuit with power semiconductor device and a control circuit for driving it are disposed on one side of the multi-layer board **101**. The high thermal conductive member **105** envelops (embeds) the electronic components requiring heat dissipation **103** therein. The heat sink **104** liberates heat generated from the electronic components requiring heat dissipation **103** to the outside.

Heat occurring in the electronic components requiring heat dissipation **103** is diffused into the high thermal conductive member **105** and after that, the heat is transferred to the heat sink **104** and released from the heat sink **104** into the air.

With the configuration of this embodiment, the heat sink **104** is firmly fixed to one side of the multi-layer board **101**, to which the electronic components requiring heat dissipation **103** are mounted, sandwiching the high thermal conductive member **105** therebetween. Heat generated from the electronic components requiring heat dissipation **103** can be thus transferred to the heat sink **104** efficiently.

The multi-layer board **101** comprises the insulating board **101***b* and a conductive circuit pattern **101***a* formed on both sides of the insulating board **101***b*. The conductive circuit pattern **101***a* formed on both sides of the insulating board **101***b* is electrically connected by the through hole **102**. The insulating board **101***b* is a, for example, glass-epoxy board in which glass fabric is impregnated with epoxy resin or ceramic board. The multi-layer board **101** of this embodiment is a double-sided board wherein the conductive circuit pattern **101***a* is formed on both sides of the insulating board **101***b* as shown in FIG. **1**. The multi-layer board **101** may be a board having more layers or a one-sided board. Electrical connection of the insulating board **101***b* in the thickness direction is achieved by adopting all-layer IVH structure (interstitial via hole structure), not limited to the through hole.

The electronic components requiring heat dissipation **103** are, for example, MOSFET, IGBT (insulated gate bipolar transistor), power semiconductor device such as shot key barrier diode, and passive device such as transistor and resistor.

Preferably, the heat sink is made of aluminum or copper with high thermal conductivity. Copper, in particular, is excellent in thermal conductivity, thereby to obtain a good heat dissipation characteristic. Aluminum is cheap and lightweight, and has high thermal conductivity.

The high thermal conductive member **105** is formed of insulating material that has unhardened thermosetting resin and inorganic filler as chief ingredients. Hence, heat transfer from the heating components **103** to the heat sink **104** can be achieved satisfactorily, resulting in good heat dissipation.

Preferably, the thermosetting resin included in the high thermal conductive member **105** has at least one of epoxy resin, phenolic resin and cyanate resin, all of which have an excellent electrical insulating property even in high temperature. As understood by the fact that epoxy resin, in particular, is widely used as semiconductor sealing material in a circuit board and the like, it is excellent in electrical insulating property as well as chemical resistance and mechanical properties (strength).

Preferably, the inorganic filler has at least one type of-powder selected from alumina, silica, magnesia, aluminum nitride and boron nitride. In the case where alumina or aluminum nitride is used as the inorganic filler, thermal conductivity of the high thermal conductive member **105** is further improved. The use of magnesia can increase thermal conductivity and thermal expansion coefficient of the high thermal conductive member **105**. And the use of silica (especially amorphous silica) enables the member **105** to save weight and decrease dielectric constant and thermal expansion coefficient. It is preferred that added amount of the inorganic filler makes up about 70 to 95 weight percent of the whole insulating sheet material (high thermal conductive member **105**). In the circuit board requiring a good thermal conductivity, it is more preferred that the filled amount of the inorganic filler occupies as high as 88 weight percent or more of the whole member **105**. The insulating sheet material **105** is manufactured by technique including, but not limited to, doctor blade method or extrusion method.

In the power module **107**, it is preferred that all components mounted to the side of the circuit board, which faces to the heat sink **104**, are short in height. By making all components short so as to suppress variation among components in vertical interval, thickness of the high thermal conductive member **105** disposed between the multi-layer board **101** and the heat sink **104** can be reduced. This prevents imposing excessive load on the heating components, and damaging the conductive circuit pattern **101***a* of the multi-layer board **101** to which the heating components **103** are mounted or generating crack in the conductive circuit pattern **101***a*. Furthermore, since the thickness between the multi-layer board **101** and the heat sink **104** can be reduced, a lighter and slimmer power module can be realized.

In the power module **107** of this embodiment, heat generated from the electronic components requiring heat dissipation **103** which are mounted to the multi-layer board **101** can be transferred to the heat sink **104** via the high thermal conductive member **105**. Strong bonding between the heat sink **104** and the high thermal conductive member **105** can reduce contact thermal resistance of the heat sink **104** and the high thermal conductive member **105**. The high thermal conductive member **105** can transfer heat generated from the power semiconductor to the heat sink **104** efficiently, thereby to suppress temperature rise of the components.

In the power module **107** of this embodiment, since air in voids occurring within the high thermal conductive member **105** during production (as mentioned later) comes out of the through hole **102** and sides of the high thermal conductive member **105**, the electronic components requiring heat dissipation **103** and the high thermal conductive member **105** stick fast to each other evenly.

Furthermore, by filling the high thermal conductive member **105** in part of the through hole **102** formed in the multi-layer board **101** so as to unify the multi-layer board **101** and the high thermal conductive member **105**, the high thermal conductive member **105** and the multi-layer board **101** are adhered to each other. Such a fixing method as to secure the heat sink **104** to the multi-layer board **101** by screws is unnecessary.

Second Embodiment

A power module in accordance with a second embodiment will be described referring to FIG. **2**.

FIG. **2** is a sectional view showing configuration of the power module in accordance with the second embodiment of the present invention. In FIG. **2**, a reference numeral **207** denotes the power module in accordance with the second embodiment. The power module **207** of this embodiment comprises the multi-layer board **101** with the through hole **102**, the electronic components requiring heat dissipation **103** (each having an arbitrary different height), the heat sink **104**, the high thermal conductive member **105** and the electronic components **106**.

The power module of the second embodiment is different from the power module of the first embodiment in that the high thermal conductive member **105** is formed so as to embed only a part of the electronic components **103** therein, thereby to provide space between the high thermal conductive member **105** and the surface of the multi-layer board **101**. The high thermal conductive member **105** remains substantially uniform in thickness at the part to which the electronic components requiring heat dissipation **103** are not mounted. Except for this, the power module of the second embodiment is the same as the power module of the first embodiment.

In the case the electronic components **103** and **106** become miniaturized and their mounting becomes densified, small voids occurring within the high thermal conductive member **105** must be removed absolutely. In the power module **207** of this embodiment, since air in voids occurring within the high thermal conductive member **105** during production (as described later) comes out of the through hole **102** and space between the high thermal conductive member **105** and the surface of the multi-layer board **101** absolutely, the electronic components requiring heat dissipation **103** and the high thermal conductive member **105** stick fast to each other certainly and evenly.

With the configuration as shown in FIG. **2**, in the power module of the second embodiment, heat can be efficiently transferred from the surfaces of the electronic components requiring heat dissipation **103** to the heat sink **104** via the high thermal conductive member **105**. Since the power module of the second embodiment has less amount of the high thermal conductive member **105** than that of the first embodiment, cost reduction and weight saving can be achieved.

In the power module **207** of this embodiment, the high thermal conductive member **105** does not flow from one side of the multi-layer board **101** to other side thereof through the through hole **102** during production (as described later).

The apparatus that builds the power module **207** of this embodiment therein may be configured so that air is fed into the space between the high thermal conductive member **105** and the surface of the multi-layer board **101** along the high thermal conductive member **105** from a fan (not shown), thereby to liberate heat released from the electronic components requiring heat dissipation **103**.

Third Embodiment

A power module in accordance with a third embodiment will be described referring to FIG. **3**.

FIG. **3** is a sectional view showing configuration of the power module in accordance with the third embodiment of the present invention. In FIG. **3**, a reference numeral **307** denotes the power module in accordance with this embodiment. The power module **307** of the third embodiment comprises the multi-layer board **101** with the through hole **102**, the electronic components requiring heat dissipation **103** (each having an arbitrary different height), the heat sink **104**, the high thermal conductive member **105** and the electronic components **106**.

The power module of this embodiment is different from that of the first embodiment in that the heat sink **104** is of recessed shape, and the high thermal conductive member **105** that envelops (embeds) the electronic component requiring heat dissipation **103** therein is enclosed with the heat sink **104**. With such configuration, heat generated from the electronic components requiring heat dissipation **103** is transferred to the heat sink **104** efficiently. By filling the unhardened member **105** in the depressed portion of the heat sink **104** during production (as described later), the member **105** can be prevented from flowing out.

In the case where the through hole **102** is formed in the multi-layer board **101**, by partially filling the unhardened member **105** in the through hole **102** formed in the multi-layer board **101** and unifying them, the high thermal conductive member **105** and the multi-layer board **101** can be adhered to each other and therefore such a fixing method as to secure the heat sink **104** to the multi-layer board **101** by screws becomes unnecessary.

Fourth Embodiment

A production method of the power module **107** of the first embodiment shown in FIG. **1** will be described referring to FIG. **4**. FIG. **4** is a process chart showing a production method of the power module **107** shown in FIG. **1** in accordance with a fourth embodiment.

In a first step shown in FIG. **4**(*a*), electronic components including the electronic components requiring heat dissipation **103** are mounted to one side of the multi-layer board **101**. The electronic components requiring heat dissipation **103** are, for example, MOSFET, IGBT, power semiconductor device such as shot key barrier diode, or passive device such as transistor and resistor. An adhesive organic film **108** is adhered to the other side of the multi-layer board **101** (the side to which the electronic components **103** are not mounted). This prevents the unhardened high thermal conductive member **105** from passing through the through hole and flowing out from the other side of the multi-layer board **101** when the high thermal conductive member **105** is disposed in a subsequent step.

Next, in a second step shown in FIG. **4**(*b*), the sheet-like unhardened high thermal conductive member **105** and the heat sink **104** of uniform thickness are disposed on the side of the multi-layer board **101**, to which the electronic components requiring heat dissipation **103** are mounted. In this step, the high thermal conductive member **105** is separated from the heat sink **104**, and the heat sink **104**, the sheet-like unhardened high thermal conductive member **105** and the multi-layer board **101** are vertically arranged in this order. Material for the high thermal conductive member **105** has been described in detail in the first embodiment.

As described in the first embodiment, the heat sink **104** is, for example, an aluminum or copper plate. Preferably, the heat sink **104** is subjected to surface roughening. Surface roughening methods includes the method of spraying aluminum oxide powder and compressed air on the surface of the heat sink. Roughening the surface of the heat sink **104** can increase adhesive strength between the high thermal conductive member **105** and the heat sink **104**. The reason for that is because surface area of the heat sink **104** is

increased by means of surface roughening and adhesive strength is improved due to the anchor effect. This allows reducing contact thermal resistance of the heat sink **104** and the high thermal conductive member **105** so that heat generated from the power semiconductor can be transferred to the heat sink **104** via the high thermal conductive member **105** efficiently.

Next, in a third step shown in FIG. **4**(*c*), the multi-layer board **101**, the high thermal conductive member **105** and the heat sink **104** are laminated to form a laminated body **401**. After that, the laminated body **401** is pressurized in the direction of surface (vertical direction in FIG. **4**) and heated, thereby that the high thermal conductive member **105** becomes hardened, and the high thermal conductive member **105** and the heat sink **104** are adhered to each other. At this time, the electronic components requiring heat dissipation **103** mounted to the multi-layer board **101** are made to be embedded in the high thermal conductive member **105**.

Finally, in a fourth step shown in FIG. **4**(*d*), the organic film **108** is removed and the electronic component **106** is mounted on the side of the multi-layer board **101** to which the organic film **108** is adhered to complete the power module **107**.

Since the laminated body **401** is pressurized in the direction of surface and heated in the third step of the fourth embodiment (FIG. **4**(*c*)), air in voids occurring within the unhardened member **105** comes out of the through hole **102** and the sides of the member **105** (direction orthogonal to the pressurizing direction), thereby to bring the electronic components **103** into coherent with the member **105** with reliability.

Fifth Embodiment

A production method of the power module **107** of the first embodiment shown in FIG. **1** will be described referring to FIG. **5**. FIG. **5** is a step chart showing a production method of the power module **107** shown in FIG. **1** in accordance with a fourth embodiment.

In a first step shown in FIG. **5**(*a*), electronic components including the electronic components requiring heat dissipation **103** are mounted to one side of the multi-layer board **101**. The electronic components requiring heat dissipation **103** are, for example, MOSFET, IGBT, power semiconductor device such as shot key barrier diode, or passive device such as transistor and resistor. The adhesive organic film **108** is adhered to other side of the multi-layer board **101** (the side to which the electronic components **103** are not mounted).

Next, in a second step shown in FIG. **5**(*b*), the paste-like unhardened high thermal conductive member **105** formed of at least inorganic filler and thermosetting resin is printed to the heat sink **104** of uniform thickness so as to have a certain thickness.

The high thermal conductive member **105** is made to be paste-like by mixing the organic filler and the liquid thermosetting resin with a triple roller. When this high thermal conductive member **105** has an appropriate viscosity to be applied over the heat sink **104**, it can be used a paste as it is. When the high thermal conductive member **105** has a higher viscosity than desired, it is possible to adjust the viscosity to an appropriate value by mixing a solvent capable of being evaporated a later step. A solvent having a boiling point lower than a cure temperature of the thermosetting resin is used as the solvent. Printing methods of printing the high thermal conductive member **105** includes metal mask printing method, screen-printing method and so on.

Next, in a third step shown in FIG. **5**(*c*), the heat sink **104** on which the high thermal conductive member **105** is formed and the multi-layer board **101** to which the electronic component requiring heat dissipation **103** are mounted are laminated so as to sandwich the high thermal conductive member **105** and the electronic component requiring heat dissipation **103** therebetween. After a laminated body **501** is formed so as to laminate the heat sink **104**, the high thermal conductive member **105** and the multi-layer board **101** in this order, the laminated body **501** is pressurized in the direction of surface (vertical direction in FIG. **5**) and heated, thereby that the high thermal conductive member **105** becomes hardened, and the electronic components requiring heat dissipation **103**, the high thermal conductive member **105** and the heat sink **104** are adhered to each other.

Finally, in a fourth step shown in FIG. **5**(*d*), the organic film **108** is removed and the electronic component **106** is mounted on the side of the multi-layer board **101**, to which the organic film **108** is adhered, to complete the power module **107**.

Since the laminated body **501** is pressurized in the direction of surface and heated in the third step of the fifth embodiment (FIG. **5**(*c*)), air in voids occurring within the unhardened member **105** comes out of the through hole **102** and the sides of the member **105** (the direction orthogonal to the pressurizing direction), thereby to bring the electronic components **103** into coherent with the member **105** with reliability.

Sixth Embodiment

A production method of the power module **207** of the second embodiment shown in FIG. **2** will be described referring to FIG. **6**. FIG. **6** is a process chart showing a production method of the power module **207** shown in FIG. **2** in accordance with a sixth embodiment.

In a first step shown in FIG. **6**(*a*), electronic components including the electronic components requiring heat dissipation **103** are mounted to one side of the multi-layer board **101**. The electronic components requiring heat dissipation **103** are, for example, MOSFET, IGBT, power semiconductor device such as shot key barrier diode, or passive device such as transistor and resistor. The adhesive organic film **108** needs not be adhered in the sixth embodiment.

Next, in a second step shown in FIG. **6**(*b*), the paste-like unhardened high thermal conductive member **105** formed of at least inorganic filler and thermosetting resin is printed to the heat sink **104** of uniform thickness so as to have a certain thickness. The production method of the unhardened high thermal conductive member **105** has been described in detail in the fifth embodiment.

Next, in a third step shown in FIG. **6**(*c*), the heat sink **104** on which the high thermal conductive member **105** is formed and the multi-layer board **101** to which the electronic components requiring heat dissipation **103** are mounted are laminated so as to sandwich the high thermal conductive member **105** and the electronic components requiring heat dissipation **103** therebetween. After a laminated body **601** is formed so as to laminate the heat sink **104**, the high thermal conductive member **105** and the multi-layer board **101** in this order, the laminated body **601** is pressurized in the direction of surface (vertical direction in FIG. **6**) and heated, thereby that the high thermal conductive member **105** becomes hardened, and the electronic components requiring heat dissipation **103**, the high thermal conductive member **105** and the heat sink **104** are adhered to each other.

The laminated body **601** of this embodiment is formed so that the high thermal conductive member **105** coats the surfaces of the electronic components mounted to the multi-layer board **101** (or embeds part of the electronic components therein), thereby generating space between the high thermal conductive member **105** and the multi-layer board **101**. The production method of the present embodiment is different from that of the fifth embodiment wherein the whole of the electronic components is embedded in the high thermal conductive member **105** in this respect.

Finally, in a fourth step shown in FIG. **6**(*d*), the electronic component **106** is mounted on the side of the multi-layer board **101**, to which the electronic components **103** are not mounted, to complete the power module **207**.

Since air in voids occurring within the unhardened member **105** comes out of the through hole **102** and the space between the high thermal conductive member **105** and the multi-layer board **101** when the laminated body **501** is pressurized in the direction of surface and heated in the third step of the sixth embodiment (FIG. **6**(*c*)), the electronic components **103** can be brought into coherent with the member **105** with reliability.

In the sixth embodiment, the paste-like unhardened high thermal conductive member **105** is printed to the heat sink **104** of uniform thickness so as to have a certain thickness in the second step shown in FIG. **6**(*b*). Needless to say, it is also possible that the sheet-like unhardened high thermal conductive member **105** and the sheet-like heat sink **104** are disposed on the side of the multi-layer board **101**, to which the electronic components requiring heat dissipation are mounted (FIG. **4**(*b*)), and the laminated body (with a predetermined space between the high thermal conductive member **105** and the multi-layer board **101** provided) is pressurized and heated (FIG. **4**(*c*)).

Seventh Embodiment

A production method of the power module **307** of the third embodiment shown in FIG. **3** will be described referring to FIG. **7**. FIG. **7** is a process chart showing the production method of the power module **307** shown in FIG. **3** in accordance with a seventh embodiment.

In a first step shown in FIG. **7**(*a*), electronic components including the electronic components requiring heat dissipation **103** are mounted to one side of the multi-layer board **101**. The electronic components requiring heat dissipation **103** are, for example, MOSFET, IGBT, power semiconductor device such as shot key barrier diode, or passive device such as transistor and resistor. The adhesive organic film **108** is adhered to other side of the multi-layer board **101** (the side to which the electronic components **103** are not mounted).

Next, in a second step shown in FIG. **7**(*b*), the heat sink **104** is formed so as to be recessed shape. The paste-like unhardened high thermal conductive member **105** formed of at least inorganic filler and thermosetting resin is produced. The production method of the unhardened high thermal conductive member **105** has been described in detail in the fifth embodiment. The paste-like unhardened high thermal conductive member **105** is filled in a depressed portion **702** of the heat sink **104**.

Alternatively, it is also possible that the sheet-like unhardened high thermal conductive member **105** is cut to be recessed shape and the member thus cut is filled in the depressed portion **702** (a similar method as in FIG. **4** (the fourth embodiment)).

Next, in a third step shown in FIG. **7**(*c*), the heat sink **104**, the high thermal conductive member **105** and the multi-layer board **101** are laminated in this order so as to set the side of the multi-layer board **101** to which the electronic components requiring heat dissipation **103** are mounted as opposed to the high thermal conductive member **105** filled in the depressed portion **702** of the heat sink **104**.

Next, in a fourth step shown in FIG. **7**(*d*), the high thermal conductive member **105** is hardened by use of a heating oven, thereby that the whole of the electronic components requiring heat dissipation **103** is coated with the high thermal conductive member **105** (embedded in the high thermal conductive member **105**) to form a laminated body **701**.

Finally, in a fifth step shown in FIG. **7**(*e*), the organic film **108** is removed and the electronic component **106** is mounted on the side of the multi-layer board **101**, to which the organic film **108** is adhered, to complete the power module **307**.

As a substitute for the fourth step shown in FIG. **7**(*d*), it is also possible, of course, that part of the electronic components requiring heat dissipation **103** is coated with the high thermal conductive member **105** (embedded in the high thermal conductive member **105**) to form the laminated body **701** with space between the high thermal conductive member **105** and the multi-layer board **101** provided. A power module **807** of an eighth embodiment (as described later) can be produced by use of this production method.

Eighth Embodiment

A power module in accordance with an eighth embodiment will be described referring to FIG. **8**.

FIG. **8** is a sectional view showing configuration of the power module in accordance with the eighth embodiment of the present invention. The power module **807** of this embodiment comprises the multi-layer board **101** with the through hole **102**, the electronic components requiring heat dissipation **103** (each having an arbitrary different height), the heat sink **104**, the high thermal conductive member **105** and the electronic components **106**.

The power module of the eighth embodiment is different from that of the third embodiment in that the high thermal conductive member **105** is formed so as to embed only a part of the surfaces of the electronic components **103** therein, thereby to provide space between the high thermal conductive member **105** and the multi-layer board **101**. The high thermal conductive member **105** remains uniform in thickness at the part to which the electronic components requiring heat dissipation **103** are not mounted. Except for this, the power module of the eighth embodiment is the same as that of the third embodiment.

In the case where the electronic components **103** and **106** become miniaturized, small voids occurring within the high thermal conductive member **105** must be removed absolutely. In the power module **807** of this embodiment, since air in voids occurring within the high thermal conductive member **105** during production (as described later) comes out of the through hole **102** and space between the high thermal conductive member **105** and the surface of the multi-layer board **101** with reliability, the electronic components requiring heat dissipation **103** and the high thermal conductive member **105** stick fast to each other evenly.

In the power module **807** of this embodiment, the heat sink **104** is formed to recessed shape and the high thermal conductive member **105** that envelops (embeds) the electronic components requiring heat dissipation **103** therein is enclosed with the heat sink **104**. The high thermal conductive member **105** remains substantially uniform in thickness

at the part to which the electronic components requiring heat dissipation **103** are not mounted. With such configuration, heat generated from the electronic components requiring heat dissipation **103** can be transferred to the heat sink **104** efficiently. By filling the unhardened member **105** in the depressed portion of the heat sink **104** during production (as described later), the member **105** is prevented from flowing out. Since the power module of this embodiment has less amount of the high thermal conductive member **105** than the power module of the third embodiment, cost reduction and weight saving can be achieved.

In the power module **807** of this embodiment, the high thermal conductive member **105** does not flow from one side of the multi-layer board **101** to other side thereof through the through hole **102** during production (as described later).

The apparatus that builds the power module **807** therein may be configured so that air is fed into the space between the high thermal conductive member **105** and the surface of the multi-layer board **101** along the high thermal conductive member **105** from a fan (not shown), thereby to liberate heat released from the electronic components requiring heat dissipation **103**.

Ninth Embodiment

A power module in accordance with a ninth embodiment will be described referring to FIG. **9**.

FIG. **9** is a sectional view showing configuration of the power module in accordance with the ninth embodiment of the present invention. In FIG. **9**, a reference numeral **907** denotes the power module of the ninth embodiment. The power module **907** of this embodiment comprises the multi-layer board **101** with the through hole **102**, the electronic components requiring heat dissipation **103** and **109** (each having an arbitrary different height), the heat sink **104**, the high thermal conductive member **105** and the electronic components **106**.

Similar to the electronic component **103**, an electronic component requiring heat dissipation **109** is a, for example, MOSFET, IGBT, power semiconductor device such as shot key barrier diode, or passive device such as transistor and resistor.

The power module **907** of the ninth embodiment is different from that of the first embodiment in that, the electronic components requiring heat dissipation **103** and **109** are mounted and the high thermal conductive member **105** and the heat sink **104** are formed on the both sides of the multi-layer board **101**. Except for this, the power module **907** of the ninth embodiment is the same as that of the first embodiment.

The power module of this embodiment consists of five layers of the heat sink **104**, the high thermal conductive member **105**, the multi-layer board **101**, the high thermal conductive member **105** and the heat sink **104**, which are vertically arranged in this order. The electronic components **103**, **106** and **109** are mounted to the insulating board **101***b* of the multi-layer board **101**. The electronic components requiring heat dissipation **103** and **109**, respectively, are disposed on both sides of the multi-layer board **101**. The high thermal conductive member **105** envelops (embeds) the electronic components requiring heat dissipation **103** and **109** therein. The heat sink **104** releases heat generated from the electronic components requiring heat dissipation **103** and **109** to the outside.

After heat occurring from the electronic components requiring heat dissipation **103** and **109** is diffused into the high thermal conductive member **105**, it is transferred to the heat sink **104** and released from the heat sink **104** into the air.

In the power module of this embodiment, heat generated from the electronic components requiring heat dissipation **103** and **109** mounted to both sides of the multi-layer board **101** can be efficiently transferred to the heat sink **104** via the high thermal conductive member **105**. By adhering the high thermal conductive member **105** to the heat sink strongly, it is possible to reduce contact thermal resistance of the heat sink **104** and the high thermal conductive member **105**. The high thermal conductive member **105** is capable of transferring heat from the power semiconductor to the heat sink **104** efficiently. This enables suppressing temperature rise of components at low level.

Tenth Embodiment

A power module in accordance with a tenth embodiment will be described referring to FIG. **10**.

FIG. **10** is a sectional view showing configuration of the power module in accordance with the tenth embodiment of the present invention. In FIG. **10**, a reference numeral **1007** denotes the power module of the tenth embodiment. The power module **1007** of this embodiment comprises the multi-layer board **101** with the through hole **102**, the electronic components requiring heat dissipation **103** and **109** (each having an arbitrary different height), the heat sink **104**, the high thermal conductive member **105** and the electronic components **106**.

The power module of the tenth embodiment is different from that of the ninth embodiment in that the high thermal conductive member **105** is formed so as to embed only a part of the surfaces of the electronic components **103** and **109** therein, thereby to provide space between the high thermal conductive member **105** and the multi-layer board **101**. The high thermal conductive member **105** remains substantially uniform in thickness at the part to which the electronic components requiring heat dissipation **103** and **109** are not mounted. Except for this, the power module of the tenth embodiment is the same as that of the ninth embodiment.

In the case where the through hole **102**, and the electronic components **103** and **109** become miniaturized, small voids occurring within the high thermal conductive member **105** must be removed absolutely. In the power module **1007** of this embodiment, since air in voids occurring within the high thermal conductive member **105** during production (as described later) comes out of the through hole **102** and space between the high thermal conductive member **105** and the surface of the multi-layer board **101** with reliability, the electronic components requiring heat dissipation **103** and **109**, and the high thermal conductive member **105** stick fast to each other evenly.

With the configuration shown in FIG. **10**, the power module of the tenth embodiment can transfer heat from the surfaces of the electronic components requiring heat dissipation **103** and **109** to the heat sink **104** via the high thermal conductive member **105** efficiently. Furthermore, since the power module of this embodiment has less amount of the high thermal conductive member **105** than that of the ninth embodiment, cost reduction and weight saving can be realized.

In the power module **1007** of this embodiment, the high thermal conductive member **105** does not flow from one side of the multi-layer board **101** to other side thereof through the through hole **102** during production (as described later).

The apparatus that builds the power module **1007** therein may be configured so that air is fed into the space between

the high thermal conductive member **105** and the surface of the multi-layer board **101** along the high thermal conductive member **105** from a fan (not shown), thereby to liberate heat released from the electronic components requiring heat dissipation **103** and **109**.

Eleventh Embodiment

A power module in accordance with an eleventh embodiment will be described referring to FIG. **11**.

FIG. **11** is a sectional view showing configuration of the power module in accordance with the eleventh embodiment of the present invention. In FIG. **11**, a reference numeral **1107** denotes the power module of this embodiment. The power module **1107** of the eleventh embodiment comprises the multi-layer board **101** with the through hole **102**, the electronic components requiring heat dissipation **103** and **109** (each having an arbitrary different height), the heat sink **104**, the high thermal conductive member **105** and the electronic components **106**.

The power module of this embodiment is different from that of tenth embodiment in that the heat sink **104** is formed to recessed shape and the high thermal conductive member **105** that envelops (embeds) the electronic components requiring heat dissipation **103** and **109** therein is enclosed with the heat sink **104**. With such configuration, heat generated from the electronic components requiring heat dissipation **103** can be transferred to the heat sink **104** efficiently. By filling the unhardened member **105** in the depressed portion of the heat sink **104** during production (as described later), the member **105** can be prevented from flowing out.

Twelfth Embodiment

A power module in accordance with a twelfth embodiment will be described referring to FIG. **12**.

FIG. **12** is a sectional view showing configuration of the power module in accordance with the twelfth embodiment of the present invention. In FIG. **12**, a reference numeral **1207** denotes the power module of this embodiment. The power module **1207** of the twelfth embodiment comprises the multi-layer board **101** with the through hole **102**, the electronic components requiring heat dissipation **103** and **109** (each having an arbitrary different height), the heat sink **104**, the high thermal conductive member **105** and the electronic components **106**.

The power module of the twelfth embodiment is different from that of the eleventh embodiment in that the high thermal conductive member **105** is formed so as to embed only a part of the surfaces of the electronic components **103** and **109** therein, thereby to provide space between the high thermal conductive member **105** and the multi-layer board **101**. The high thermal conductive member **105** remains substantially uniform in thickness at the part to which the electronic components requiring heat dissipation **103** and **109** are not mounted. Except for this, the power module of the twelfth embodiment is the same as that of the eleventh embodiment.

In the case where the electronic components **103** and **109** become miniaturized, small voids occurring within the high thermal conductive member **105** must be removed absolutely. In the power module **1207** of this embodiment, since air in voids occurring within the high thermal conductive member **105** during production (as described later) comes out of the through hole **102** and space between the high thermal conductive member **105** and the surface of the multi-layer board **101** with reliability, the high thermal conductive member **105** and the electronic components requiring heat dissipation **103** and **109**, respectively, stick fast to each other evenly.

In the power module **1207** of this embodiment, the heat sink **104** is formed to recessed shape and the high thermal conductive member **105** that envelops (embeds) the electronic components requiring heat dissipation **103** and **109** therein is enclosed with the heat sink **104**. With such configuration, heat generated from the electronic components requiring heat dissipation **103** and **109** can be transferred to the heat sink **104** efficiently. By filling the unhardened member **105** in the depressed portion of the heat sink **104** during production (as described later), the member **105** can be prevented from flowing out. Since the power module of this embodiment has less amount of the high thermal conductive member **105** than that of the third embodiment, cost reduction and weight saving can be achieved.

The apparatus that builds the power module **1207** therein may be configured so that air is fed into the space between the high thermal conductive member **105** and the surface of the multi-layer board **101** along the high thermal conductive member **105** from a fan (not shown), thereby to liberate heat released from the electronic components requiring heat dissipation **103**.

Thirteenth Embodiment

A production method of the power module **907** shown in FIG. **9** will be described referring to FIG. **13**. FIG. **13** is a process chart showing a production method of the power module **907** shown in FIG. **9** in accordance with a thirteenth embodiment.

In a first step shown in FIG. **13**(*a*), the electronic components requiring heat dissipation **103** and the electronic component **106** are mounted to one side of the multi-layer board **101**, and the electronic component requiring heat dissipation **109** is mounted to other side thereof.

Next, in a second step shown in FIG. **13**(*b*), the paste-like unhardened high thermal conductive member **105** formed of at least inorganic filler and thermosetting resin is printed to the heat sink **104** of uniform thickness so as to have a certain thickness. The production method of the unhardened high thermal conductive member **105** has been described in detail in the fifth embodiment.

Next, in a third step shown in FIG. **13**(*c*), a laminated body wherein the multi-layer board **101** and the heat sink **104** are laminated so that the high thermal conductive member **105** printed to the heat sink **104** faces to each side of the multi-layer board **101** is formed at both sides simultaneously or one by one. At this time, the electronic components requiring heat dissipation **103** and **109** are made to be embedded in the high thermal conductive member **105**. The laminated body is pressurized in the direction of surface (vertical direction in FIG. **13**) and heated, thereby that the high thermal conductive member **105** becomes hardened, and the high thermal conductive member **105**, and the electronic components requiring heat dissipation **103** and **109**, respectively, are adhered to each other to complete the power module **907**. Impletion of the third step under reduced pressure can further prevent voids from occurring.

Fourteenth Embodiment

A production method of the power module **1007** shown in FIG. **10** will be described referring to FIG. **14**. FIG. **14** is a step chart showing a production method of the power module **1007** shown in FIG. **10** in accordance with a fourteenth embodiment.

In a first step shown in FIG. **14**(*a*), the electronic components requiring heat dissipation **103** and the electronic component **106** are mounted to one side of the multi-layer board **101**. The paste-like unhardened high thermal conductive member **105** formed of at least inorganic filler and thermosetting resin is printed to the heat sink **104** of uniform thickness so as to have a certain thickness. The production method of the unhardened high thermal conductive member **105** has been described in detail in the fifth embodiment.

Next, in a second step shown in FIG. **14**(*b*), the heat sink **104** on which the high thermal conductive member **105** is formed and the multi-layer board **101** to which the electronic component requiring heat dissipation **103** are mounted are laminated so as to sandwich the high thermal conductive member **105** and the electronic component requiring heat dissipation **103** therebetween. After a laminated body **1401** is formed so as to laminate the heat sink **104**, the high thermal conductive member **105** and the multi-layer board **101** in this order, the laminated body **1401** is pressurized in the direction of surface (vertical direction in FIG. **14**) and heated, thereby that the high thermal conductive member **105** becomes hardened, and the electronic components requiring heat dissipation **103**, the high thermal conductive member **105** and the heat sink **104** are adhered to each other. The laminated body **1401** is formed so that the high thermal conductive member **105** coats the surfaces of the electronic components mounted to the multi-layer board **101** (or embeds part of the electronic components therein), thereby to provide space the high thermal conductive member **105** and the multi-layer board **101**. The high thermal conductive member **105** remains substantially uniform in thickness at the part to which the electronic components requiring heat dissipation **103** are not mounted.

Next, in a third step shown in FIG. **14**(*c*), the electronic component requiring heat dissipation **109** is mounted to the side of the multi-layer board **101**, to which the electronic components **103** and **106** are not mounted in the first step. The paste-like unhardened high thermal conductive member **105** formed of at least inorganic filler and thermosetting resin is printed to the heat sink **104** of uniform thickness so as to have a certain thickness.

Finally, in a fourth step shown in FIG. **14**(*d*), the heat sink **104** on which the high thermal conductive member **105** is formed and the multi-layer board **101** to which the electronic component requiring heat dissipation **109** is mounted are laminated so as to sandwich the high thermal conductive member **105** and the electronic component requiring heat dissipation **109** therebetween. After that, the laminated body is pressurized in the direction of surface (vertical direction in FIG. **14**) and heated, thereby that the high thermal conductive member **105** becomes hardened, and the electronic components requiring heat dissipation **109**, the high thermal conductive member **105** and the heat sink **104** are adhered to each other to complete the power module **1007**.

The power module **1007** is formed so that the high thermal conductive member **105** coats the surfaces of the electronic components mounted to the multi-layer board **101** (or embeds part of the electronic components therein), thereby to provide space the high thermal conductive member **105** and the multi-layer board **101**.

Since air in voids occurring within the unhardened high thermal conductive member **105** comes out of the through hole **102** and space between the high thermal conductive member **105** and the multi-layer board **101** when the laminated body is pressurized in the direction of surface and heated in the second step (FIG. **14**(*b*)) and the fourth step (FIG. **14**(*d*)), and the electronic components requiring heat dissipation **103** and **109**, respectively, can be stuck fast to the high thermal conductive member **105** with reliability.

Fifteenth Embodiment

Another production method of the power module **1007** shown in FIG. **10** will be described referring to FIG. **15**. FIG. **15** is a process chart showing a production method of the power module **1007** shown in FIG. **10** in accordance with a fifteenth embodiment.

Since a first step (FIG. **15**(*a*)) and a second step (FIG. **15**(*b*)) of the fifteenth embodiment are the same as the first step (FIG. **13**(*a*)) and the second step (FIG. **13**(*b*)) of the thirteenth embodiment, explanations thereof are omitted.

Next, in a third step shown in FIG. **15**(*c*), a laminated body wherein the multi-layer board **101** and the heat sink **104** are laminated so that the high thermal conductive member **105** formed on the heat sink **104** faces to each side of the multi-layer board **101** is formed on each side of the multi-layer board **101** simultaneously. The laminated body is formed so that the high thermal conductive member **105** coats the surfaces of the electronic components (or embeds part of the electronic components therein), thereby to provide space between the high thermal conductive member **105** and the multi-layer board **101**. The high thermal conductive member **105** remains substantially uniform in thickness at the part to which the electronic components requiring heat dissipation **103** and **109** are not mounted. Next, the laminated body is pressurized in the direction of surface (vertical direction in FIG. **15**) and heated, thereby that the high thermal conductive member **105** becomes hardened, and the high thermal conductive member **105**, and the electronic components requiring heat dissipation **103** and **109**, respectively, are adhered to each other to complete the power module **1007**.

In the production method of the fifteenth embodiment, the heat sink **104** and the high thermal conductive member **105** are adhered to both sides of the multi-layer board **101** simultaneously. As the production method of the fifteenth embodiment has less number of steps than the production method of the thirteenth embodiment, the power module **1007** of the tenth embodiment can be produced at a lower cost.

Sixteenth Embodiment

A production method of the power module **1107** shown in FIG. **11** will be described referring to FIG. **16**. FIG. **16** is a process chart showing a production method of the power module **1107** shown in FIG. **11** in accordance with a sixteenth embodiment.

In a first step shown in FIG. **16**(*a*), the electronic components requiring heat dissipation **103** and the electronic component **106** are mounted to one side of the multi-layer board **101**, and the electronic component requiring heat dissipation **109** is mounted to other side thereof.

Next, in a second step shown in FIG. **16**(*b*), the heat sink **104** is formed so as to be recessed shape. The paste-like unhardened high thermal conductive member **105** formed of at least inorganic filler and thermosetting resin is produced. The production method of the unhardened high thermal conductive member **105** has been described in detail in the fifth embodiment. The paste-like unhardened high thermal conductive member **105** is filled in a depressed portion of the heat sink **104**.

Alternatively, it is also possible that the sheet-like unhardened high thermal conductive member **105** is cut to be

recessed shape and the member thus cut is filled in the depressed portion **702** (a similar method as in FIG. **4** (the fourth embodiment)).

Next, the multi-layer board **101** and a heat sink **104** are laminated so as to set each side of the multi-layer board **101** as opposed to the high thermal conductive member **105** filled in the depressed portion of the heat sink **104**.

Finally, in a third step shown in FIG. **16**(*c*), the high thermal conductive member **105** is hardened by use of a heating oven at both sides simultaneously (or one by one), thereby that the whole of the electronic components requiring heat dissipation **103** mounted to the multi-layer board **101** is coated with the high thermal conductive member **105** (embedded in the high thermal conductive member **105**) to form a laminated body **1107**.

All steps in the production method of the sixteenth embodiment are carried out in a vacuum chamber. Hence, no void remains within the high thermal conductive member **105** and therefore, the electronic components **103** and **109** can be brought into coherent with the member **105** with reliability.

Seventeenth Embodiment

A production method of the power module **1207** shown in FIG. **12** will be described referring to FIG. **17**. FIG. **17** is a process chart showing a production method of the power module **1207** shown in FIG. **12** in accordance with a seventeenth embodiment.

In a first step shown in FIG. **17**(*a*), the electronic components requiring heat dissipation **103** and the electronic component **106** are mounted to one side of the multi-layer board **101**.

Next, the heat sink **104** is formed so as to be recessed shape. The paste-like unhardened high thermal conductive member **105** formed of at least inorganic filler and thermosetting resin is produced. The production method of the unhardened high thermal conductive member **105** has been described in detail in the fifth embodiment. The paste-like unhardened high thermal conductive member **105** is filled in a depressed portion of the heat sink **104**.

Alternatively, it is also possible that the sheet-like unhardened high thermal conductive member **105** is cut to be recessed shape and the member thus cut is filled in the depressed portion (a similar method as in FIG. **4** (the fourth embodiment)).

Next, in a second step shown in FIG. **17**(*b*), the multi-layer board **101** and a heat sink **104** are laminated so that the side of the multi-layer board **101** to which the electronic components **103** are mounted is set as opposed to the high thermal conductive member **105** filled in the depressed portion of the heat sink **104**. The high thermal conductive member **105** remains substantially uniform in thickness at the part to which the electronic components requiring heat dissipation **103** are not mounted. The high thermal conductive member **105** is hardened by use of a heating oven, thereby that the surfaces of the electronic components requiring heat dissipation **103** mounted to the multi-layer board **101** are coated with the high thermal conductive member **105** (embedded in the high thermal conductive member **105**).

In a third step shown in FIG. **17**(*c*), the electronic component requiring heat dissipation **109** is mounted to the side of the multi-layer board **101** to which the electronic components are mounted in the first step.

Next, the heat sink **104** is formed so as to be recessed shape. The paste-like unhardened high thermal conductive member **105** formed of at least inorganic filler and thermosetting resin is produced. The paste-like unhardened high thermal conductive member **105** is filled in a depressed portion of the heat sink **104**.

Finally, the multi-layer board **101** and a heat sink **104** are laminated so that the side of the multi-layer board **101** to which the electronic components **109** is mounted is set as opposed to the high thermal conductive member **105** filled in the depressed portion of the heat sink **104**. The high thermal conductive member **105** remains substantially uniform in thickness at the part to which the electronic component requiring heat dissipation **109** is not mounted. The high thermal conductive member **105** is hardened by use of a heating oven, thereby that the surfaces of the electronic component requiring heat dissipation **109** mounted to the multi-layer board **101** are coated with the high thermal conductive member **105** (embedded in the high thermal conductive member **105**) to complete the power module **1207**.

Eighteenth Embodiment

A production method of the power module **1207** shown in FIG. **12** will be described referring to FIG. **18**. FIG. **18** is a process chart showing a production method of the power module **1207** shown in FIG. **12** in accordance with a eighteenth embodiment.

Since a first step (FIG. **18**(*a*)) and a second step (FIG. **18**(*b*)) of the eighteenth embodiment are the same as the first step (FIG. **16**(*a*)) and the second step (FIG. **16**(*b*)) of the sixteenth embodiment, explanations thereof are omitted.

Next, in a third step shown in FIG. **18**(*c*), the multi-layer board **101** and the heat sink **104** are disposed so that each side of the multi-layer board **101** faces to the high thermal conductive member **105** filled in the depressed portion of the heat sink **104**. The high thermal conductive member **105** remains substantially uniform in thickness at the part to which the electronic components requiring heat dissipation **103** and **109** are not mounted. The high thermal conductive member **105** is hardened by use of a heating oven, thereby that the high thermal conductive member **105** coats the surfaces of the electronic components requiring heat dissipation **103** and **109** mounted to the multi-layer board **101** (or embeds part of the electronic components therein) to complete the power module **1207**.

In the production method of the eighteenth embodiment, the heat sink **104** and the high thermal conductive member **105** are adhered to both sides of the multi-layer board **101** simultaneously. As the production method of this embodiment has less number of steps than the production method of the seventeenth embodiment, the power module **1007** of the twelfth embodiment can be produced at a lower cost.

All steps in the production method of the eighteenth embodiment are carried out at normal pressures. Since air in the voids within the unhardened member **105** comes out of the through hole **102** and space between the high thermal conductive member **105** and the multi-layer board **101**, the electronic components **103** and **109** can be brought into coherent with the member **105** with reliability.

By producing the power module with the methods in accordance with the fourth to seventh embodiments and the thirteenth to eighteenth embodiment, heat generated from the electronic components **103** (or **103** and **109**), each of which has an arbitrary different height, can be transferred to the heat sink **104** via the high thermal conductive member **105**. Hence, the method of producing the power module with a good heat dissipation characteristic can be achieved.

Furthermore, by adhering the high thermal conductive member **105** to the heat sink **104** and unifying them, it is possible to reduce contact thermal resistance and to achieve the method of producing the power module with a good heat dissipation characteristic.

In the power module of the ninth to twelfth embodiment, needless to say, the electronic component **106** may be mounted to the side of the multi-layer board **101**, to which the electronic component requiring heat dissipation **109**, is mounted.

In the thirteenth to fifteenth embodiment, the paste-like unhardened high thermal conductive member **105** is printed to the heat sink **104** of uniform thickness so as to have a certain thickness, the heat sink **104** to which the high thermal conductive member **105** is printed is disposed on the side of the multi-layer board **101**, to which the electronic component is mounted, and the laminated body is pressurized and heated. Alternatively, it is possible, of course, that the sheet-like high thermal conductive member **105** and the heat sink **104** are disposed on the side of the multi-layer board **101** to which the electronic component is mounted and the laminated body is pressurized and heated (the method in FIG. **4** (fourth embodiment)).

According to the present invention, the advantageous effect of achieving a power module that has a constitutional characteristics including good heat dissipation characteristic, high thermal resistance reliability, low cost and high productivity can be obtained.

According to the present invention, the advantageous effect of achieving a power module that efficiently takes heat occurring in the parts of various heights mounted to the circuit board by use of a multipurpose heat sink or a simple-shaped heat sink can be obtained.

According to the present invention, the advantageous effect of achieving a lightweight power module due to miniaturization and weight saving of heat radiating member.

Although the invention has been described in its preferred form with a certain degree of particularity, it is understood that the present disclosure of the preferred form has been changed in the details of construction and the combination and arrangement of parts may be resorted to without departing from the spirit and the scope of the invention as hereinafter claimed.

The invention claimed is:

1. A power module comprising:

a circuit board including plural first devices and plural second devices mounted thereto, said circuit board and said plural first and second devices constituting an electric power conversion circuit, said plural first devices each having a high heating value,

a heat sink, and

a member having electrical insulation characteristics and high thermal conductivity, that is disposed between said plural first and second devices and said heat sink, said member having a first portion and a second portion, wherein said first portion of said member adheres to each of said plural first devices for transferring heat from said plural first devices to said heat sink, and wherein said second portion of said member is spaced from and not in contact with said plural first and second devices, and said circuit board and said member remaining substantially uniform in thickness at said second portion of said member.

2. A power module in accordance with claim **1**, wherein said heat sink has a depressed portion and said member is filled in said depressed portion.

3. A power module in accordance with claim **1**, wherein said member has thermosetting resin and inorganic filler as chief ingredients.

4. A power module in accordance with claim **1**, wherein all of said plural first and second devices are short in height and mounted to a side of said circuit board that faces said heat sink.

5. A power module comprising:

a circuit board having first and second surfaces, each said first and second surfaces including plural first devices and plural second devices mounted thereto, said circuit board and said plural first and second devices constituting an electric power conversion circuit, said plural first devices each having a high heating value;

first and second heat sinks mounted on the first and second surfaces of said circuit board, respectively; and

first and second members mounted on the first and second surfaces of said circuit board, respectively, each said member having electrical insulation characteristics and high thermal conductivity, each said member having a first portion and a second portion,

wherein said first member is disposed between said plural first and second devices and said first heat sink, and said second member is disposed between said plural first and second devices and said second heat sink,

wherein said first portion of said first member adheres to each of said plural first devices for transferring heat from said plural first devices to said first heat sink, said second portion of said first member is spaced from and not in contact with said plural first and second devices and said circuit board, and said first member remains substantially uniform in thickness at said second portion of said first member, and

wherein said first portion of said second member adheres to each of said plural first devices for transferring heat from said plural first devices to said second heat sink, said second portion of said second member is spaced from and not in contact with said plural first and second devices and said circuit board, and said second member remains substantially uniform in thickness at said second portion of said second member.

* * * * *