US 20090162622A1

(19) United States

(12) Patent Application Publication

(10) Pub. No.: US 2009/0162622 A1

(43) Pub. Date: Jun. 25, 2009

Van Veen et al.

(54) COMPOSITION OF A SOLDER, AND METHOD OF MANUFACTURING A SOLDER CONNECTION

(75) Inventors: **Nicolaas Johannes Anthonius Van Veen**, Eindhoven (NL); **Mohammad Hossain Biglari**, Den Haag (NL)

Correspondence Address:
PHILIPS INTELLECTUAL PROPERTY & STANDARDS
P.O. BOX 3001
BRIARCLIFF MANOR, NY 10510 (US)

(73) Assignees: **DUTCH POLYMER INSTITUTE**, EINDHOVEN (NL); **MAT-TECH B.V.**, DELFT (NL)

(21) Appl. No.: **11/569,609**

(22) PCT Filed: **May 11, 2005**

(86) PCT No.: **PCT/IB05/51547**

§ 371 (c)(1),
(2), (4) Date: **Nov. 27, 2006**

(30) **Foreign Application Priority Data**

May 27, 2004 (EP) 04102355.7

Publication Classification

(51) **Int. Cl.**
B23K 35/34 (2006.01)
B23K 31/02 (2006.01)
B32B 15/04 (2006.01)

(52) **U.S. Cl.** **428/198**; 148/24; 228/256; 428/469

(57) **ABSTRACT**

The solder composition comprises particles of a thermodynamically metastable alloy. One of the elements of the alloy will form an intermetallic compound with a metal surface. The solder composition is particularly suitable for use in bumping of semiconductor devices.

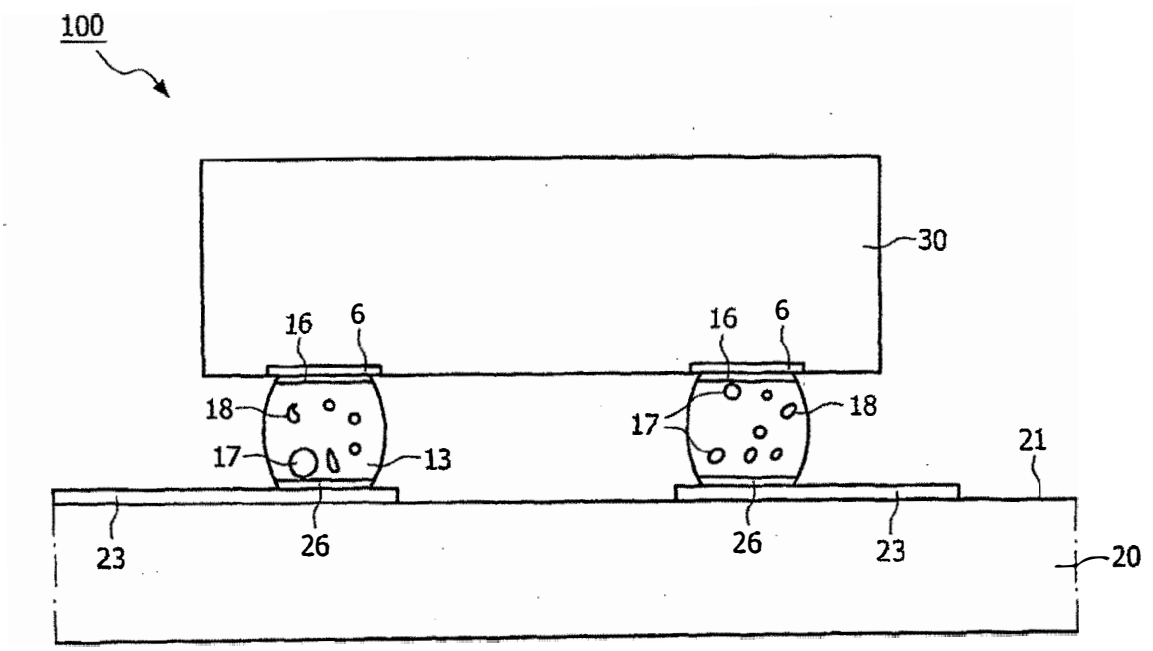

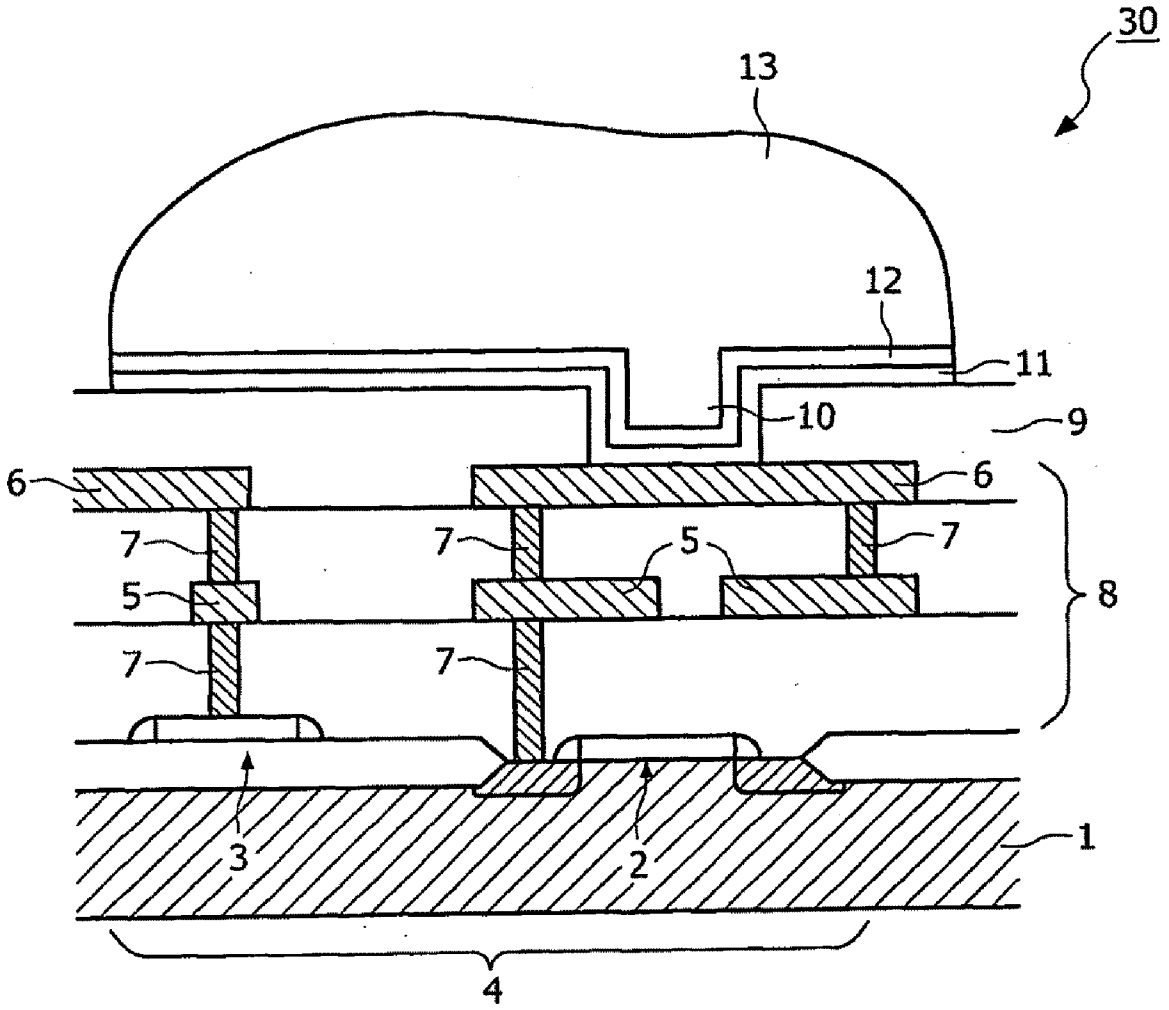

FIG. 1
(Prior art)

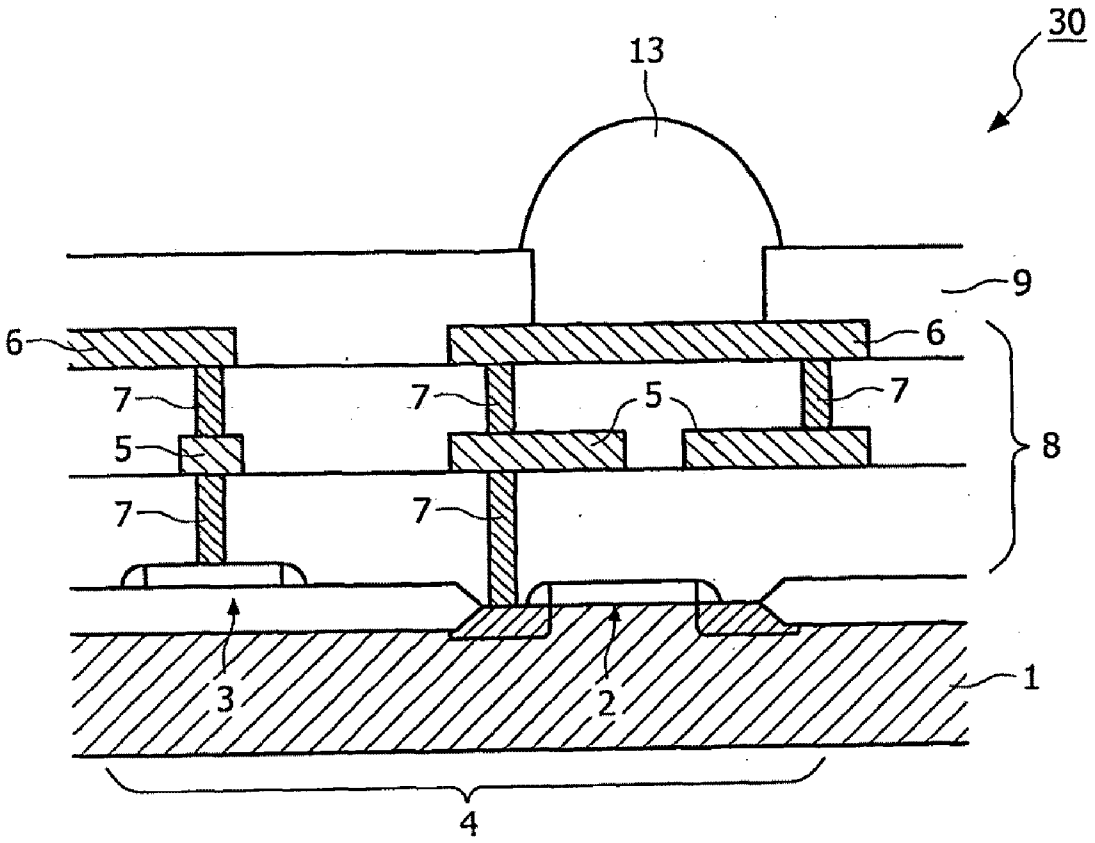

FIG. 2

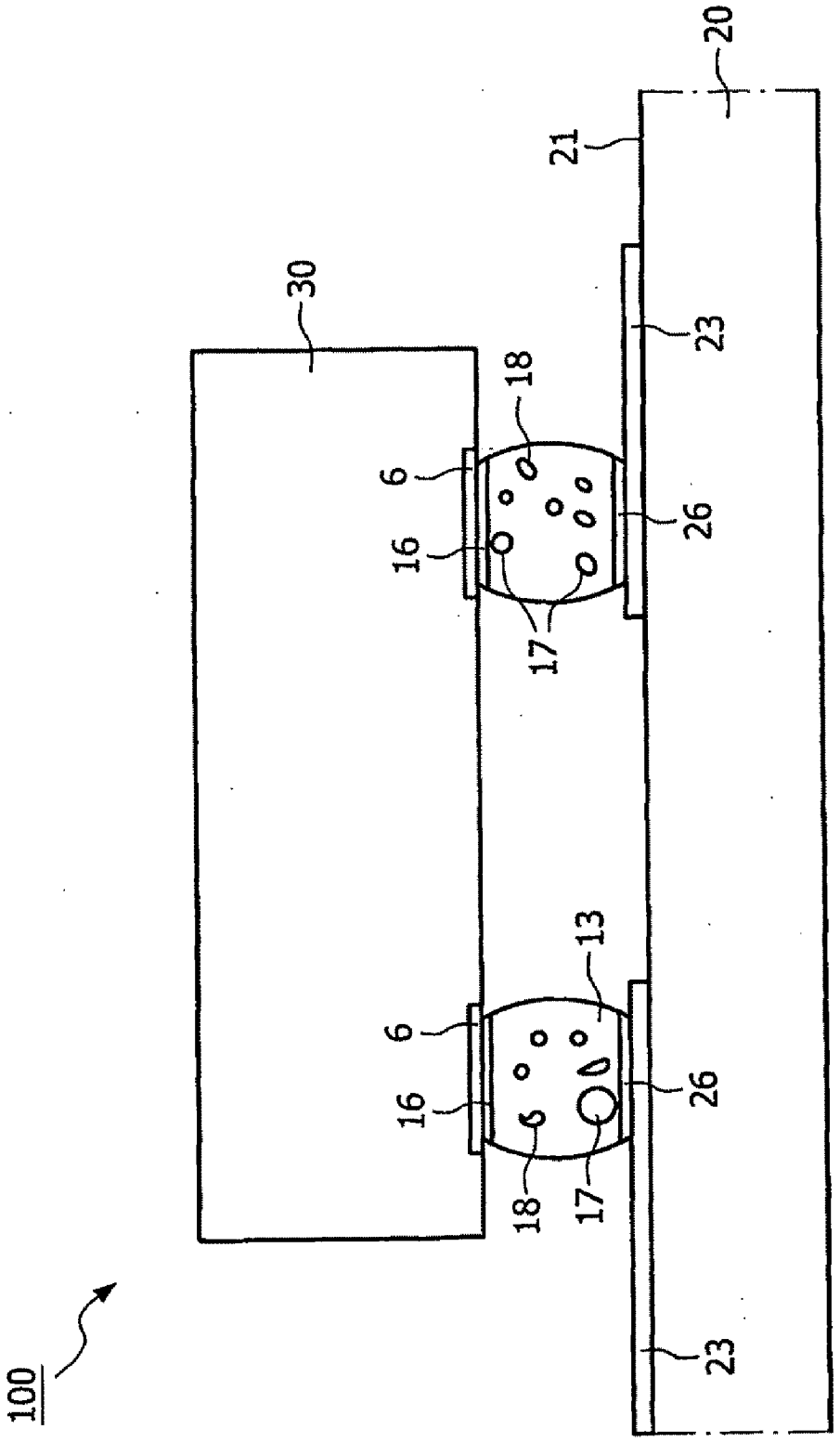

FIG. 3

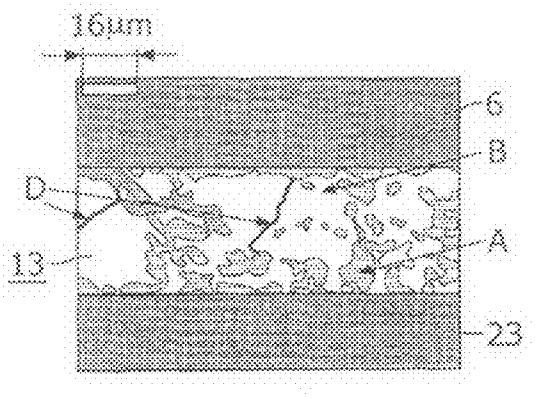

FIG. 4

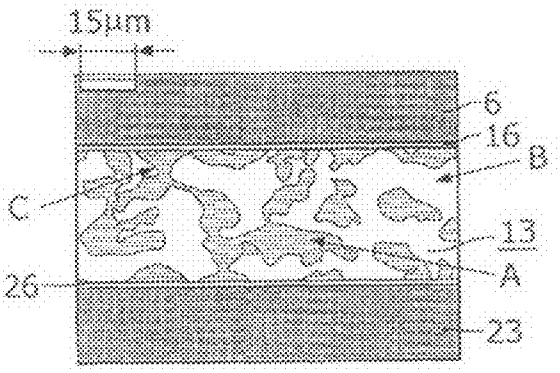

FIG. 5

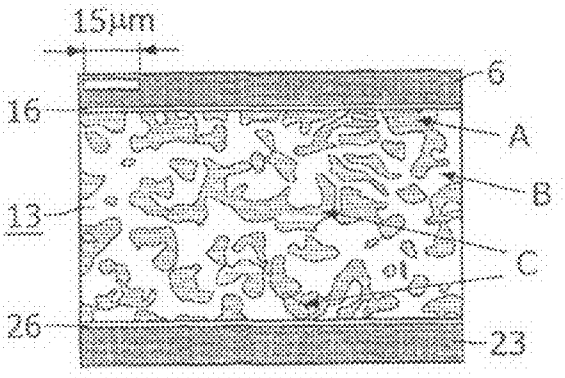

FIG. 6

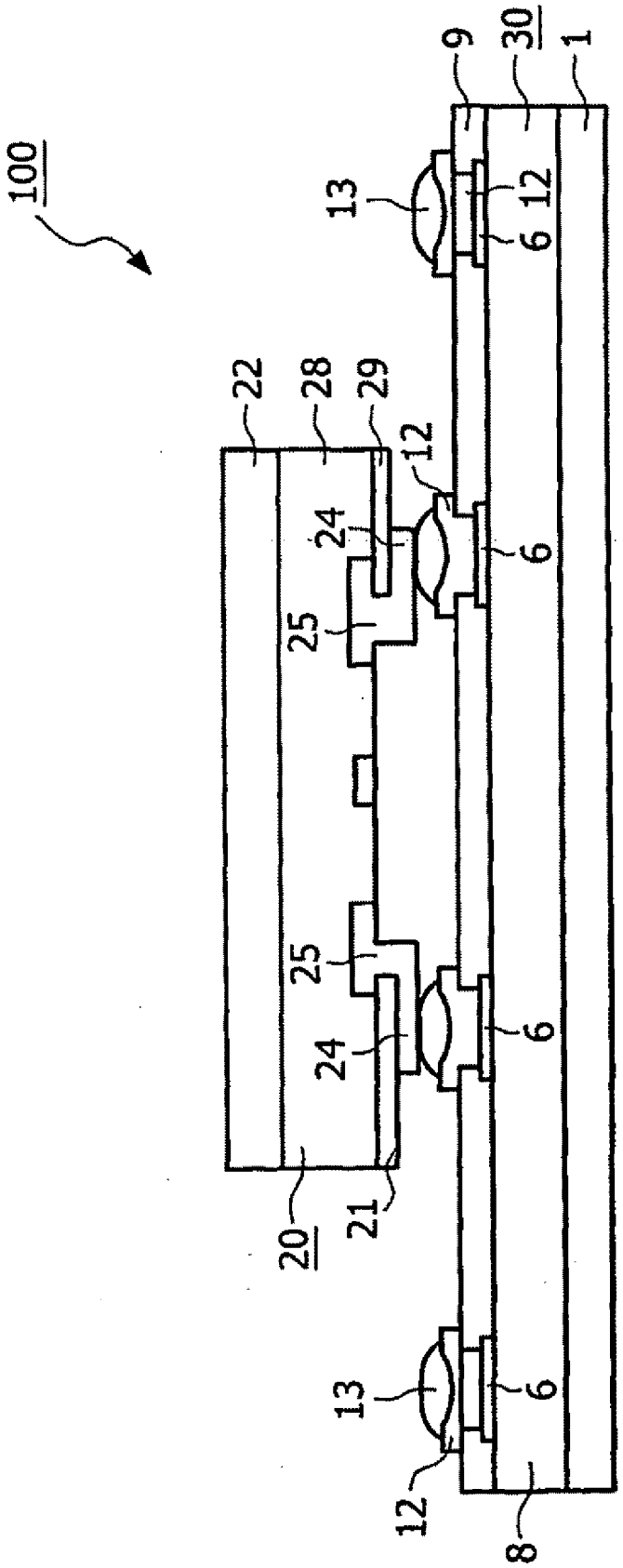

FIG. 7

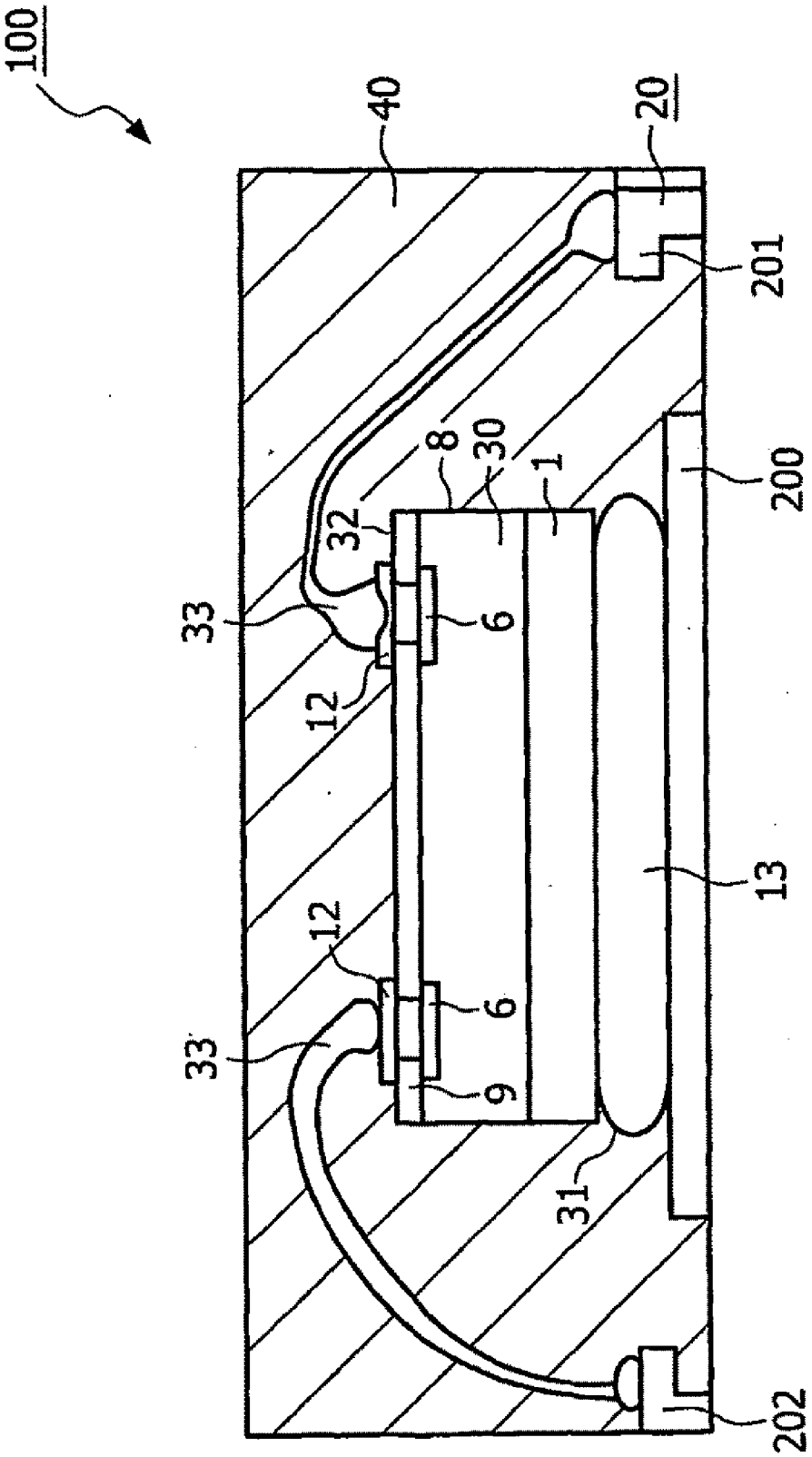

FIG. 8

COMPOSITION OF A SOLDER, AND METHOD OF MANUFACTURING A SOLDER CONNECTION

[0001] The invention relates to a composition of a solder.

[0002] The invention also relates to a method of manufacturing an electrically conducting connection between a bonding area at a first substrate and a bonding area at a second substrate by means of a solder composition, comprising the steps of:

[0003] providing the solder composition onto the bonding area at the first substrate;

[0004] assembling the first and the second substrate, such that the solder composition is sandwiched between the said bonding areas at the first and the second substrate, and

[0005] providing the electrically conducting connection by heating the solder composition.

[0006] The invention further relates to a substrate with a bonding area on which a layer of a solder composition is present and to an assembly of a first and a second substrate provided with bonding areas that are mutually interconnected by means of an electrically conducting solder connection.

[0007] Solder compositions are known per se for the connection of metallic surfaces. The metallic surfaces may extend over a large area, but may alternatively be limited to small areas at an otherwise electrically insulating surface. The latter situation occurs particularly in the context of electronic components and products. Integrated circuits and the like represent an application of specific relevance. These integrated circuits are increasingly connected to carriers in a flip-chip orientation by means of a plurality of solder or metal bumps. In this connection, trends are towards the use of a larger number of bumps per integrated circuit and the reduction of the pitch between neighbouring bumps, and in particular the combination of both.

[0008] Requirements for the connection of electronic components to carriers are that the connection provides both mechanical stability and electrical conductivity. Solder compositions fulfill these requirements in an excellent way. This has a number of reasons: first of all the electroconductivity of the solder is better than that of alternatives such as anistropically conducting glue and the like; besides, the solder can be applied in ball-shaped portions—that are also referred to as bumps—; moreover, the solder bumps can be applied before assembly and will flow out only at elevated temperatures in a thermal treatment step. In said thermal treatment step it is even possible to transport a substrate with bumps. Said elevated temperature is not so high however that the carrier or the components will breakdown or become damaged.

[0009] Specific attention has been paid to so called diffusion solders. These solders comprise a first and a second metal component. On soldering, the second metal component is molten, while the first is solid. Diffusion of the first component into the second component leads to formation of an intermetallic phase, that has a lower melting temperature than the first metal component. This intermetallic phase however tends to be brittle and detrimental to the mechanical properties of the solder joint. WO-A 96/19314 proposes the inclusion of a filler to solve this problem. WO-A 02/20211 proposes the provision of the first metal component as particles in the solder of the second component. WO-A 03/72288 proposes the addition of nanoparticles to such diffusion solder. And finally, the solder connection can absorb pressures as a consequence of differences in thermal expansion between the component and the carrier.

[0010] The presently available solder compositions however also have disadvantages. One of those disadvantages is the need for adhesion layers if the contact comprises a certain metal. Such metals are also classified as poorly solderable contacts. Said poor solderability often can be attributed to an oxide surface layer being formed at the contact. This oxide surface layer is electrically insulating and prohibits a direct connection between the solder and the metal. As a consequence, both adhesion problems and conduction problems will occur. In order to solve these problems, the contact is generally provided with adhesion layers. Such adhesion layers need to be applied separately, which involves additional process steps and additional costs. Moreover, the adhesion layers restrict the use of such poorly solderable metals, particularly in that component and carrier need to withstand certain minimum temperatures. The complexity of the problem is further increased in that the contact at a first substrate comprises a different metal than the contact at a second substrate that faces the first substrate.

[0011] It is therefore a first object of the invention to provide a solder composition that may be applied to establish an electrical connection between bonding areas at two opposed substrates, at least one of which contacts is poorly solderable.

[0012] It is a second object of the invention to provide a method of manufacturing an electrically conducting connection of the kind mentioned in the opening paragraph, which connection may be established on a poorly solderable bonding area without the application of a separate adhesion layer.

[0013] The first object is achieved in that particles of a thermodynamically metastable alloy are dispersed in the solder composition, which alloy comprises an element that, upon application of the composition to a metal oxide containing surface, will form an intermetallic compound with the metal of said surface.

[0014] The second object is achieved in that a first of said bonding areas at the first and second substrate contains an alloying metal and that a solder composition is applied in which particles of a thermodynamically metastable alloy are dispersed, which alloy comprises an element that will form an intermetallic compound with the alloying metal of the first contact.

[0015] The solder composition of the invention is in fact a chemically stable, two-phase mixture of compounds that allow the provision of a good electrical connection to contacts at opposed substrates. However, although the solder composition of the invention is chemically stable per se, the particles in the composition are thermodynamically metastable. This means that if the composition is heated, the constituents of the particles have the tendency to take on a different physical chemical shape, e.g. to diffuse into the solder composition and possibly to react The constitution of the metastable particles therein can be chosen such as to remove any oxide surface layer at the surface of a poorly solderable contact. The oxide surface layer is not only removed then, but replaced by an electrically conducting adhesion layer of an intermetallic compound. This intermetallic compound comprises both an element of the contact and an element originating from the thermodynamically metastable particles.

[0016] It is observed that the solder composition of the invention on soldering thus is engaged in a completely different reaction, as compared to the diffusion solders men-

tioned in the introduction. The reaction of the diffusion solders is between a first and a second component of the solder itself. The intermetallic phase is formed in the solder. Contrarily, in the present invention, the reaction is between constituents of the metastable particles and the metal surface of one of the articles that are to be connected. In that respect, the solder of the invention has the ability of wetting the surface, and particularly of removing the oxide layer, whereas the prior art diffusion solders does not have any inherent ability to achieve such.

[0017] Moreover, the constitution of the particles is different. None of the prior art documents discloses at all, that the particles comprise an alloy. In WO-A 02/20211, these are particles with a certain core and a shell of a metal with the higher melting point (i.e. the first metal component). In WO-A 03/72288 the particles are nanoparticles, that do not react at all, but improve the mechanical properties of the intermetallic phase.

[0018] Most preferably, but not limited thereto, the particles in the solder of the present invention are primarily constituted from a first and a second component. These components of the particles are believed to be present in different phases; most likely is a constitution of a core of one of the metal components, a first shell of the alloy in a first phase, and a second shell of the alloy in the second phase. An outer shell of the other metal component could be present. This outer shell is however assumed to be substantially exchanged or to get dissolved substantially after that the particles have been brought into the matrix composition. The second shell is present in the thermodynamically metastable phase, for instance due to a rapid cooling step during the manufacture of the particles. It is observed that this image of a core and shells is an inherently simplified picture. The image does not exclude holes in the shells or regions in one shell or core in another phase.

[0019] The inventors of the present invention believe, without being bound by it, that not all particles in the solder composition take part in the surface reaction. The adhesion layer then provides the adhesion between the contact and the solder composition. An important feature of the invention is moreover that any surplus of particles in the solder composition will, after cooling down, continue to exist as a second phase in the solder connection without substantial negative impact on the mechanical stability or the electrical conductivity of the solder connection.

[0020] It is a first advantage of the present invention that the solder composition adheres to a large variety of different surfaces. These include metals like aluminium, copper, gold, nickel and alloys thereof; semiconductor materials such as an ohmic contact of doped silicon; conductive oxides and nitrides such as indium-tin-oxide, ruthenium oxide and titanium nitride. Particularly advantageous is the application thereof in circumstances that do not allow a standard solder bump in view of the oxidizing surface, and particularly the application thereof on aluminium, nickel (that is otherwise provided with a gold surface), silicon and indium-tin-oxide. Major applications thereof are respectively labels and other conventional ICs; immersion soldering for fine pitch processing, particularly with a solder composition with a Sn-matrix such as BiSn or PbSn; die attach processes; and chip-on-glass processes and display drivers in particular.

[0021] It is a second advantage of the present invention that the contacts at opposing substrates may contain a different metal as their primary component. In this case, the adhesion layer may be formed at the contact of a single substrate only. Suitable examples include aluminum and copper; aluminium and gold; indium-tin-oxide and copper or aluminum, etc.

[0022] It is a further advantage that the solder composition can be lead-free. The application of lead-free solder is required for environmental reasons.

[0023] The particles of a thermodynamically stable nature that are applicable comprise as alloying element for the intermetallic compound, particularly and preferably, one or more of the group of indium, tin, bismuth and zinc. These elements can form intermetallic compounds with aluminium in particular, but also with other elements such as tungsten, titanium, vanadium and nickel. In fact, the alloying element used herein is chosen from one of the higher groups of the periodic table (V, VI, Vb), whereas the elements present in the contact are in the lower groups of the periodic table (III, IIIa, Iva), thus enabling the formation of a noble gas configuration which forms the alloy.

[0024] In a further embodiment, the particles further comprise an element that is able to form an oxide preferentially above aluminium oxide or tin oxide. This element is particularly chosen from the group of titanium, chromium, aluminum and nickel. An alternative approach is a treatment with a suitable acid solution for the removal of the aluminum oxide layer. It is observed that, irrespective of an aluminum oxide surface, aluminium can act as this component since the aluminium oxide of the surface turns out to have another energy level than that of the oxide particles formed from the metastable element. The resulting situation is a dispersion of these oxide particles in the solder bump.

[0025] Suitable compositions of the metastable particles are for instance $SnAg_4Ti_4$, and $ZnAl_6Ag_6$. Although these particle compositions are known per se, the use of these compositions as particles in a standard solder composition to obtain solder droplets that can be applied for bumping of semiconductor devices is not known. Moreover, at present they are applied, subject to specific requirements, to semiconductor devices. The Sn-based particles used herein have melting temperatures of 200-238° C., the Zn-based particles have melting temperatures of 380-426° C. It has been found that it is not necessary to heat the solder composition to a temperature above the melting temperature of the particles, but only to a temperature above the melting point of the matrix material.

[0026] In a particularly preferred embodiment the reacting element is Sn and the solder composition comprises Sn. The presence of tin in both the particles and the solution provides an improved stability of the composition. The use of tin-containing solder is furthermore well established in the field of semiconductor assembly. Suitable examples of such solders are the SAC (tin-silver-copper) solder, and tin-based solders such as SnCu, SnBi, PbSn, SnIn, SnZn and ternary or quaternary alloys of tin, indium, bismuth and zinc. The combination of such tin-containing solder with a metallization or bump of gold is most preferred in that it enables a eutectic AuSn interconnect to be formed. The use of a tin-containing solder is furthermore advantageous in that it has a relatively low melting point. As a consequence, the solder composition of the invention can be applied for poorly solderable contacts on carriers that can withstand only a relatively low temperature. Such carriers are particularly organic and flexible carriers.

[0027] Generally, the dispersed particles are present in a weight concentration of 0.1 to 90%, and preferably in a weight concentration of 0.5 to 60%. The concentration is

preferably at the lower end of this range, of the order of up to 10%, as this is sufficient to form a thin layer of the intermetallic compound. The exact concentration may be chosen as desired, also in view of the viscosity of the composition, and particle size. It will be understood that the rheology of the composition is an important factor in order to ascertain that the surface of the contact will be covered by the intermetallic compound as much as desired. It is of course highly preferred, both for the chemical stability and for the electrical conductivity, that the complete contact is covered with the intermetallic compound.

[0028] The average diameter of the dispersed particles is for instance in the range from 0.1 to 80 μm. Preferably the average diameter is in the range from 0.3 to 20 μm. The minimum size of the dispersed particles is only determined by the tendency to dissolve in the solder composition, as such a dissolution may change the phase of the elements in the particles, and thus the reactivity. It will be understood that a small size is preferred in order to obtain a thin layer of the intermetallic compound having a uniform thickness. Moreover, a small size enhances the uniformity of the distribution of the particles in the solder composition. Additionally, small particle sizes appear to be required for applications in which the pitch between individual dots of the solder is small. The pitch is generally defined as the distance from the center of one solder bump to the center of a neighbouring solder bump. "Small" implies, in this case, a distance of 15 to 40 μm, and it will be understood that the particles need to be an order of magnitude smaller than that at least, and preferably even more than that.

[0029] The composition of the invention is specifically suitable for use as solder bumps in electronic applications, in which the bonding areas are limited to bond pads on an otherwise substantially electrically insulating substrate. Such bond pads generally have dimensions of less than 100*100 micrometers, including also less than 10*10 microns, however, they may be larger as well. Alternatively, the solder composition of the invention is used for other applications. A particular application is the die attachment of components to a carrier. Surprisingly good results have been obtained for the attachment of dies comprising a semiconductor substrate. Other applications include the connection of two larger plates, and the provision of rings of solder. The particle size may be adapted in this context so as to act as a spacer that determines the distance between individual surfaces of two opposing substrates.

[0030] In the method of the invention, it is highly preferred that one of the bonding areas—in particular bond pads which are also referred to as contacts—comprises aluminum. This metal is used not only as interconnect material in integrated circuits and other components such as passive networks. It can be applied on labels and other flexible substrates at low temperature and has a good protection against humidity and the like due to its natural oxide layer. However, the use of aluminum has often caused problems and additional costs in that separate adhesion layers had to be applied, generally at higher temperatures. In the invention, this is not problematic.

[0031] It is moreover suitable that the first contact is present at the first substrate and the contact at the second substrate comprises a thickened top layer, that will form an alloy with the solder composition. Although the reverse is not excluded, good results have been obtained in experiments in which the intermetallic compound will form at the substrate at which the solder composition is applied. This has the advantage that a stable connection and protection of the first contact can be formed directly after the provision of the solder composition. The connection to the second substrate can be formed at a later stage, and possibly at another location. In view of the high stability of the intermetallic compound, this will not be redissolved in a later soldering step; however, the layer of the intermetallic compound may be thickened as a consequence of continued deposition.

[0032] The presence of a thickened top layer leads to the formation of an alloy with the solder composition. Examples of thickened top layers include under bump metallizations, stud bumps, galvanic bumps and the like. Suitable materials are known per se to the skilled person and include for instance nickel, copper and gold.

[0033] The method of the invention is particularly suitable for the provision of components, such as integrated circuits, on flexible carriers. However, it is certainly not limited to this application. Other suitable applications comprise chip-on-chip applications, in which bond pads on one chip are connected to bond pads on another chip. Often, although not necessarily, at least one of these bond pads comprises aluminum or an aluminum alloy. A first combination of chips is that of a memory chip and a processor or other logic chip. An alternative combination is an integrated circuit with a network of passive components as a carrier. A further combination is for instance an integrated circuit on top of which a passive component or network is provided. Particularly for said component the solder of the invention appears to be highly suitable, as this needs to be a small pitch solution. Also, since no separate adhesion layer is needed, the costs are reduced and the flexibility is increased. In a present version, the metallisation layer of such a passive network is made of aluminum. The use of the composition of the invention allows a substantial reduction of the mask steps. Furthermore, the composition of the invention might well be tuned so as to have limited wettability with aluminum or with aluminum oxide only. In this manner, the solder composition can be applied maskless, and continued adhesion will be established through the formation of the intermetallic compound.

[0034] Any heating needed for the formation of the intermetallic compound can be provided locally or over the complete substrate. Use of a reflow oven is an option but is not needed.

[0035] As stated above, the solder composition may be applied on a substrate that is thereafter sold or transported to another location. The intermediate product thus is a substrate with the solder composition of the invention in the form of droplets or the like. The substrate will generally be part of the component, in case the integrated circuit. The pattern of contacts may be a ball grid array as generally used. It is however certainly not excluded that use is made of a pattern of bond pads on active, in which structure bond pads overlie the active elements of the semiconductor device.

[0036] The solder may be applied to the surface of the component in the form of bumps, i.e. by individually depositing droplets. An alternative, but suitable method is the use of immersion solder bumping. In this method, the layer containing particularly Sn is provided on a suitable under bump metallisation, for instance of nickel or copper, by immersion. In this case, the opposite substrate may have the poorly solderable contacts. The advantage of immersion soldering is the reduced pitch that can be achieved.

[0037] The invention further relates to an assembly of a first and a second substrate provided with contacts that are mutually interconnected by means of an electrically conducting solder connection.

[0038] It is a further object of the invention to provide such an assembly that has an adhesion layer that provides good contact.

[0039] This object is achieved in that an adhesion layer comprising an intermetallic compound is present at an interface of at least one of the contacts and the solder connection, which compound comprises an element present in the contact and an alloying element originating from the solder composition.

[0040] These and other aspects of the composition and the method of the invention will be further elucidated with reference to the Figures, in which:

[0041] FIG. **1** shows a diagrammatic cross-sectional view of the prior art substrate;

[0042] FIG. **2** shows a diagrammatic cross-sectional view of a substrate according to the invention;

[0043] FIG. **3** shows a diagrammatic cross-sectional view of the assembly according to the invention;

[0044] FIG. **4** shows a photograph of a first test result FIG. **5** shows a photograph of a second test result FIG. **6** shows a photograph of a test result of a comparative example FIG. **7** shows a diagrammatic cross-sectional view of a second example of the assembly of the invention; and

[0045] FIG. **8** shows a diagrammatic cross-sectional view of a third example of the assembly of the invention.

[0046] The Figures are not drawn to scale and the same reference numbers in different Figures refer to like parts.

[0047] FIG. **1** shows a diagrammatic cross-sectional view of a prior art substrate. This substrate is an integrated circuit device. It comprises a plurality of elements, in this case a MOS transistor **2** and a polysilicon track **3**. The circuit has been provided in an active circuit area **4** at a surface of a semiconductor body **1**. In overlying relationship relative to the circuit devices **2**,**3** an interconnect structure **8** is provided for interconnecting the circuit devices **2**,**3** to form the circuit. In this embodiment, the interconnect structure **8** comprises a first patterned metal layer **5**, a second patterned metal layer **6** and interconnection vias **7**. The patterned metal layers **5**,**6** comprise, in this example, Al or an aluminium alloy, such as AlCu. On top of the interconnect structure **8** a layer of a passivating material **9** has been disposed. The passivating material is for instance silicon nitride or silicon oxide. The passivation structure may comprise further layers that inhibit radiation and are chemically stable against reactive etchants, so as to provide a hurdle against unauthorized access to the integrated circuit. The latter aspect is primarily important for application of the integrated circuit in smartcards and the like. By means of a photolithographic step and etching, a via contact hole **10** has been formed which extends from the second patterned metal layer **6** and passes through the layer of passivating material **9**. A barrier layer **11**, for instance comprising TiW or Ti/Pt is provided on the layer of passivating material **9** and in the via contact hole **10** for instance by means of a sputtering process. The barrier layer **11** is relatively thin compared to the layer of passivating material **9** and has a thickness of about 200 to 300 nm. On top of the barrier layer **11** a metal layer **12** has been deposited for instance by means of a sputtering process. This metal layer **12** may for instance comprise Au and has a thickness of 100 to 200 nm. Subsequently, a Pb/Sn bump **13** has been grown on the barrier layer **11** and the metal layer **12** by means of electroplating preceded by a photolithographic step to define the bump dimension. The barrier layer **11**, the metal layer **12** and the bump **13** together form the bump electrode. The bump electrode lies substantially straight above the active circuit area **4**.

[0048] FIG. **2** shows in a diagrammatic cross-sectional view a substrate of the invention. In this substrate, the barrier layer **11** and the metal layer **12** are absent. Instead, use is made of the solder composition of the invention as the material for the bump **13**. This material is printed as a solder paste, and the passivation layer **9** acts as the solder resist material. Use is made of a eutectic $Sn_{43}Bi_{57}$-soldering alloy as the matrix material, comprising 4.5% by weight of particles of Sn_{92}Ag4Ti4 and 0.5% by weight of particles of $Sn_{90}Al_6Ag_4$. The solder composition is applied in the contact holes **10** to the bond pads of Al or an Al alloy, which are defined in the second patterned metal layer **6**. These bond pads are provided with a native aluminium oxide layer. The solder composition is made to attach to the bond pads by a heating step to above the melting point of the matrix material. The heating step was carried out at 170° C. in this example, as the melting point of eutectic tin-bismuth is 139° C. The resulting structure is applied to a carrier. The bond pads had a size of about 50×50 microns, which is however not critical and open to reduction.

[0049] FIG. **3** shows in a diagrammatic cross-sectional view the assembly **100** of the invention. The integrated circuit **30** with the said solder bumps **13** is, in this case, applied to a carrier **20** comprising aluminium tracks **23** on a first side **21** of the carrier **20**. Subsequently, a bonding step is carried out in which ultrasonic bonding is performed at 35 kHz and 5 W output, at a temperature of 250° C. and during 10 seconds. The resulting connection comprises adhesion layers **16**, **26** of an intermetallic compound of SnAl. Additionally, particles **17** of SnTi are formed and present within the solder bump **13** that bind the oxygen which is set free from the originally present aluminium oxide surface layer. Particles **18** of SnAgTi may be present in addition to the particles **17** of SnTi with incorporated oxygen. These are the particles that did not, or only partially, react during the formation of the adhesion layer **16**, **26**.

[0050] FIG. **4** shows a photograph of a comparative example. In this case, use was made of a SnBi alloy without any added particles. Cracks—indicated as D—are visible which show that the connection is not reliable. The dark phase, indicated as A, comprises Tin (Sn); most probably it is a tin-rich composition further comprising Bi. The white phase, indicated as B, comprises Bi; most probably it is a Bi-rich phase further comprising Sn. The separation of the SnBi alloy in a normal process that occurs in the course of time. It does not have any negative impact on either conductivity or mechanical stability.

[0051] FIGS. **5** and **6** show photographs of a cross-section of connections made in first experiments. The difference between the photographs is in the morphology of the particles. FIG. **5** shows the result for needle-shaped particles C and FIG. **6** shows the result for particles C with an irregular shape. These particles contain the metastable alloys of the invention. It is observed that those particles that are relatively far away from the surface, did not react therewith. It is further observed that it is so far unknown what happens to the second alloying element after the reaction to the substrate. In this case particles of SnTi were used. The Sn reacts with the surface to form Al—Sn. The Ti most probably forms an oxide. It is not clear whether this TiO_2 is present as a separate phase,

or is part of the SnTi particles or is dissolved in the SnBi. As it relates to relatively small amounts, this is not of importance for the properties of the connection formed. The surfaces **6**,**23** contain Aluminum. The phases A and B can be distinguish in the same way as in FIG. **4**. The adhesion layers **16**,**26** of the intermetallic AlSn are present at the surface. The extend preferably, but not necessarily on the complete surface **6**,**23**.

[0052] The particles in this experiment had a diameter of the order of 10-20 microns. This size will be reduced in further experiments to less than 10 microns, more preferably less than 5 microns and most preferably 1-3 microns. This reduction is done in view of the miniaturization in the IC industry. A highly ohmic contact is obtained and the conductivity is good.

[0053] FIG. **7** shows in a diagrammatic cross-sectional view a second embodiment of the assembly **100** according to the invention. The solder composition **13** of the invention is applied onto a nickel or copper metallisation **12** in this example. In this case use is made of the technique of immersion soldering bumping which is known per se. The nickel metallisation **12** is preferably applied in an electroless process. This is a maskless process, and the nickel metallisation can be applied with a very small pitch of less than 40 microns and potentially of the order of 10 microns. The substrate **30** is then applied to a carrier **20** comprising aluminium bond pads **24**. This carrier **20** is in particular an integrated circuit having a semiconductor substrate **22**, an interconnect structure **28** and a passivation layer **29**. In view of the small height of the solder bump applied with immersion soldering, the bond pad **24** on the first side **21** of the carrier **20** is provided preferably on top of the passivation layer **29**, for instance in a bond pads on active process as known per se in the field. In such a bond pads on active process, the bond pads **24** are rerouted to an interconnect layer **25** below the passivation layer **29** through vertical interconnects or the like. This embodiment has the advantage over conventional immersion soldering bumping that no additional metallisation of Au need be applied at the carrier **20**. This again has the advantage that the resolution can be enhanced; contrary to a metallisation, an aluminium bond pads on active layer **24** can be suitably applied in a wafer fab and as part of standard processing. The immersion solder bumping technique has the advantage that the soldering process can be carried out without substantial pressure. It can therefore very suitably be combined with bond pads on active, that cannot generally withstand high bonding pressures. Although not shown here, any space between the carrier **20** and the substrate **30** is suitably filled with an underfill. The bond pads **6** and solder bumps **13** that are not connected to corresponding bond pads **24** at the carrier can be used for connection to an external device or to other devices. The connection to an external device is suitably made using wirebonding or flip-chip, as known in the art. The substrate **30** may contain an integrated circuit comprising active components such as transistors, but could alternatively be a passive chip comprising capacitors, resistors, inductors and optionally diodes.

[0054] FIG. **8** shows in a diagrammatic cross-sectional view a further application of the solder composition of the invention. Herein, the solder composition **13** is used for soldering a backside **31** of a semiconductor device **30** to a heat sink **200** of the carrier **20**. Particularly, the semiconductor device **30** comprises a silicon substrate **1** as a support wafer. Additionally, it may contain a buried layer of another material, such as an oxide, a nitride or even a silicide and/or layers of another material, including SiGe, SiC and III-V materials. The latter materials may be grown epitaxially. Surprisingly, it was found that the solder composition **13** of the invention has a good adhesion to silicon. In a first experiment, use was made of a solder composition **13** on the basis of eutectic tin-bismuth solder. Similar results may be achieved with solders having a higher melting point, such as tin-silver-copper, tin-silver and tin-copper alloys. As shown in the drawing, the device **30** is provided with an interconnect structure **8** in a top layer of which bond pads **6** are defined. These bond pads **6**, which are exposed through apertures in the passivation layer **9** present at a top side **32** of the device **30**, are provided with a metallisation **12**, generally referred to as underbump metallisation (UBM) and with an electrically conducting connection, in this case wirebonds **33**. The wirebonds **33** are connected to contact pads **201**, **202** that are part of the carrier **20**. In this case, the carrier **20** is a leadframe of the HVQFN-type. The assembly is protected by an encapsulation **40** of any conventional material, such as epoxy.

1. Composition of a solder in which particles of a thermodynamically metastable alloy are dispersed, which alloy comprises an element that, upon application of the composition to a metal oxide containing surface, will form an intermetallic compound with the metal of said surface.

2. Composition as claimed in claim **1**, characterized in that the element of the alloy that reacts with the surface is chosen from the group of Sn, Zn, In, Al and Bi.

3. Composition as claimed in claim **2**, characterized in that the reacting element is Sn and the solder composition comprises Sn.

4. Composition as claimed in claim **1**, in which the dispersed particles are present in a weight concentration of 0.1 to 90%, and preferably in a weight concentration of 0.5 to 60%.

5. Composition as claimed in claim **1**, in which the dispersed particles have an average diameter between 0.5 and 80 μm, and preferably between 1and 20 μm.

6. A method of manufacturing an electrically conducting connection between a bonding area at a first substrate and a bonding area at a second substrate by means of a solder composition, comprising the steps of:

providing the solder composition onto the bonding area at the first substrate;

assembling the first and the second substrate, such that the solder composition is sandwiched between the said bonding areas at the first and the second substrate, and

providing the electrically conducting connection by heating of the solder composition,

characterized in that:

a first of said bonding areas at the first and second substrate contains an alloying metal and a corresponding oxide layer;

a solder composition is applied, in which particles of a thermodynamically metastable alloy are dispersed, which alloy comprises an element that will form an intermetallic compound with the alloying metal of the first bonding area.

7. The method as claimed in claim **6**, wherein the alloying metal of the first bonding area is Al.

8. The method as claimed in claim **6**, wherein the bonding areas are limited to bonding pads and the first bonding area is present at the first substrate and the bonding area at the second substrate comprises a thickened top layer, that will form an alloy with the solder composition.

9. The method as claimed in claim **6**, wherein the composition of a solder in which particles of a thermodynamically metastable alloy are dispersed, which alloy comprises an element that, upon application of the composition to a metal oxide containing surface, will form an intermetallic compound with the metal of said surfaces is applied.

10. A substrate with a bonding area on which a layer of a solder composition as claimed in claim **1**.

11. A substrate as claimed in claim **10**, wherein the layer of solder composition is droplet-shaped.

12. A substrate as claimed in claim **10**, characterized in that the substrate is part of an integrated circuit.

13. An assembly of a first and a second substrate provided with surfaces which, at a first area, are mutually interconnected by means of an electrically conducting solder connection, characterized in that an adhesion layer comprising an intermetallic compound is present at an interface of at least one of the first area and the solder connection, said compound comprising an element present in the first area and an alloying element originating from the solder composition.

14. An assembly as claimed in claim **13**, characterized in that particles of a thermodynamically metastable alloy are dispersed in said solder connection, the alloying element of the intermetallic compound originating from said thermodynamically metastable alloy.

15. An assembly as claimed in claim **13** wherein the first substrate comprises an integrated circuit, and the first area is limited to an area identified as bond pads.

* * * * *