US009615453B2

(12) **United States Patent**
Yang

(10) **Patent No.: US 9,615,453 B2**
(45) **Date of Patent: Apr. 4, 2017**

(54) **METHOD FOR FABRICATING GLASS SUBSTRATE PACKAGE**

(71) Applicant: **Ping-Jung Yang**, Hsin-Chu (TW)

(72) Inventor: **Ping-Jung Yang**, Hsin-Chu (TW)

(73) Assignee: **Ping-Jung Yang**, HsinChu (TW)

(*) Notice: Subject to any disclaimer, the term of this patent is extended or adjusted under 35 U.S.C. 154(b) by 349 days.

(21) Appl. No.: **14/036,256**

(22) Filed: **Sep. 25, 2013**

(65) **Prior Publication Data**

US 2014/0085842 A1 Mar. 27, 2014

Related U.S. Application Data

(60) Provisional application No. 61/705,649, filed on Sep. 26, 2012.

(51) **Int. Cl.**
H05K 1/09 (2006.01)
H01L 23/15 (2006.01)
(Continued)

(52) **U.S. Cl.**
CPC ***H05K 1/09*** (2013.01); ***H01L 23/15*** (2013.01); ***H01L 23/49811*** (2013.01); ***H01L 23/49827*** (2013.01); ***H01L 23/49833*** (2013.01); ***H01L 51/0096*** (2013.01); *H01L 24/13* (2013.01); *H01L 24/16* (2013.01); *H01L 25/16* (2013.01); *H01L 2224/0401* (2013.01); *H01L 2224/05124* (2013.01); *H01L 2224/05147* (2013.01); *H01L 2224/05599* (2013.01); *H01L 2224/131* (2013.01); *H01L 2224/1308* (2013.01); *H01L 2224/13076* (2013.01); *H01L 2224/13111* (2013.01); *H01L 2224/13144* (2013.01); *H01L 2224/13147* (2013.01); *H01L 2224/13155* (2013.01); *H01L 2224/16145* (2013.01); *H01L 2224/16225* (2013.01); *H01L 2224/16237* (2013.01); *H01L 2224/2919* (2013.01); *H01L 2224/32225* (2013.01); *H01L 2224/45144* (2013.01); *H01L 2224/45147* (2013.01); *H01L 2224/48091* (2013.01); *H01L 2224/48228* (2013.01); *H01L 2224/48465* (2013.01);
(Continued)

(58) **Field of Classification Search**
CPC H05K 1/09; H01L 23/15; H01L 51/0096; H01L 2224/0401
USPC 361/762
See application file for complete search history.

(56) **References Cited**

U.S. PATENT DOCUMENTS

4,221,047 A 9/1980 Narken et al.
4,639,543 A 1/1987 Fang
(Continued)

Primary Examiner — Jenny L Wagner
Assistant Examiner — Michael P McFadden

(57) **ABSTRACT**

A substrate comprising a solid glass core having a first surface and a second surface opposed to the first surface; multiple conductors extending through the solid glass core beginning at the first surface and ending at the second surface, wherein one of the conductors has a third surface and a fourth surface, wherein the third surface and the first surface are substantially coplanar, wherein the second surface and the fourth surface are substantially coplanar, wherein one of the conductors comprise a copper-tungsten alloy material, wherein the solid glass core is directly contact with the conductor; and a first dielectric layer and a first metal layer formed at the first surface, wherein the first metal layer at the first surface is electrically coupled with one of the conductors.

20 Claims, 44 Drawing Sheets

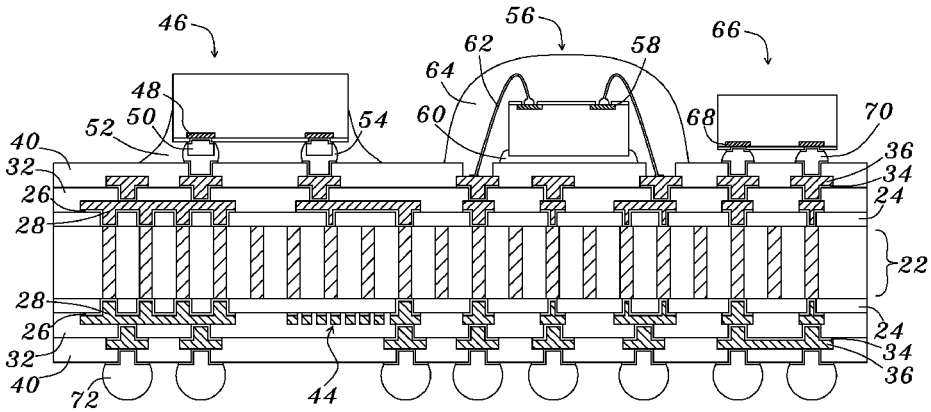

MYW Semitech Exhibit 2001
TSMC and Apple v. MYW Semitech - IPR2026-00065

(51) **Int. Cl.**

H01L 23/49	(2006.01)
H01L 51/00	(2006.01)
H01L 23/498	(2006.01)
H01L 23/00	(2006.01)
H01L 25/16	(2006.01)

(52) **U.S. Cl.**

CPC *H01L 2224/73204* (2013.01); *H01L 2224/73265* (2013.01); *H01L 2924/12042* (2013.01); *H01L 2924/12044* (2013.01); *H01L 2924/1461* (2013.01); *H01L 2924/15311* (2013.01); *H01L 2924/181* (2013.01); *H01L 2924/30107* (2013.01); *Y02E 10/549* (2013.01)

(56) **References Cited**

U.S. PATENT DOCUMENTS

4,975,103	A	12/1990	Ackermann et al.	
5,294,238	A	3/1994	Fukada et al.	
5,705,855	A	1/1998	Carson et al.	
6,156,413	A	12/2000	Tomari et al.	
6,177,707	B1	1/2001	Dekker et al.	
6,194,762	B1	2/2001	Yamazaki et al.	
6,309,901	B1	10/2001	Tahon et al.	
6,339,197	B1	1/2002	Fushie et al.	
6,539,750	B1	4/2003	Takagi et al.	
6,673,698	B1	1/2004	Lin et al.	
6,691,409	B2	2/2004	Suzuki et al.	
6,772,514	B2	8/2004	Ogura et al.	
6,799,438	B2	10/2004	Herzbach et al.	
6,839,946	B2	1/2005	Ylilammi et al.	
6,894,358	B2	5/2005	Leib et al.	
6,989,604	B1	1/2006	Woo et al.	
7,038,309	B2 *	5/2006	Hsu	H01L 23/15 257/690
7,071,521	B2	7/2006	Leib et al.	
7,072,018	B2	7/2006	Yamamura et al.	
7,091,589	B2	8/2006	Mori et al.	
7,259,080	B2	8/2007	Quenzer et al.	
7,279,771	B2 *	10/2007	Sunohara	H01L 23/49822 174/255
7,285,834	B2	10/2007	Leib et al.	
7,337,540	B2	3/2008	Kurosawa	
7,362,403	B2	4/2008	Uehara	
7,476,623	B2	1/2009	Schreder et al.	
7,749,900	B2	7/2010	Li et al.	
7,808,799	B2 *	10/2010	Kawabe	H01L 23/49822 174/250
7,993,510	B2	8/2011	En	
8,207,453	B2	6/2012	Ma et al.	
2002/0038725	A1	4/2002	Suzuki et al.	
2002/0145197	A1	10/2002	Ohta et al.	
2002/0159243	A1	10/2002	Ogawa et al.	
2005/0012217	A1	1/2005	Mori et al.	
2006/0006539	A1 *	1/2006	Matsui	H01L 23/481 257/758
2006/0020371	A1 *	1/2006	Ham	B01L 3/502761 700/266
2008/0054457	A1	3/2008	Lin et al.	
2008/0080111	A1	4/2008	Lin et al.	
2008/0113505	A1 *	5/2008	Sparks	H01L 21/76898 438/637
2008/0129439	A1 *	6/2008	Nishikawa	H01F 17/0013 336/232
2008/0149384	A1	6/2008	Kawabe	
2008/0150623	A1	6/2008	Lin et al.	
2008/0283277	A1	11/2008	Muramatsu et al.	
2008/0284014	A1	11/2008	Lee et al.	
2008/0318361	A1 *	12/2008	Han	H01L 21/76898 438/109
2009/0174065	A1	7/2009	Hayashi et al.	
2009/0273073	A1	11/2009	Tachibana et al.	
2010/0164030	A1	7/2010	Oggioni et al.	
2010/0200898	A1	8/2010	Lin et al.	
2010/0246152	A1	9/2010	Lin et al.	
2010/0290191	A1	11/2010	Lin et al.	
2011/0026232	A1	2/2011	Lin et al.	
2011/0089574	A1 *	4/2011	Itoh	H01L 23/3677 257/774
2011/0147055	A1 *	6/2011	Ma	H01L 23/49822 174/255

* cited by examiner

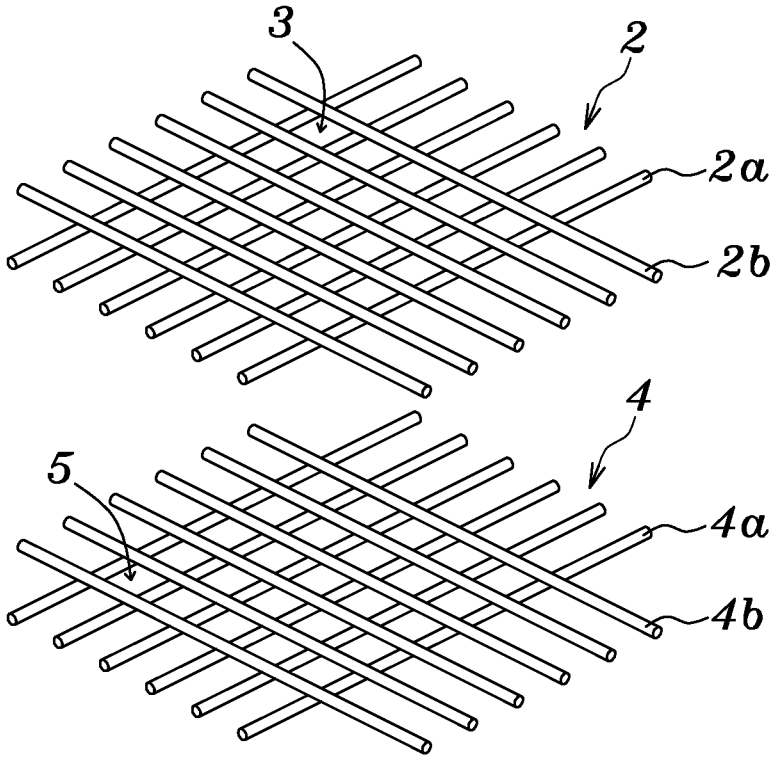

Fig. 1

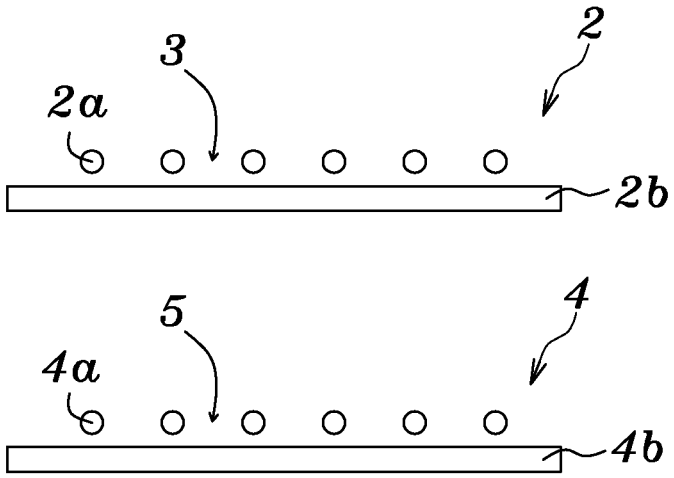

Fig. 2

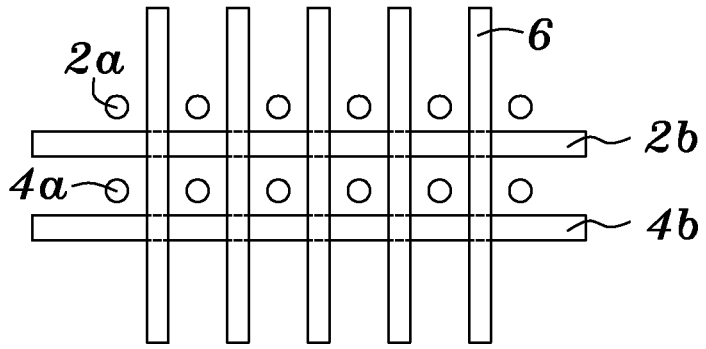

Fig. 3

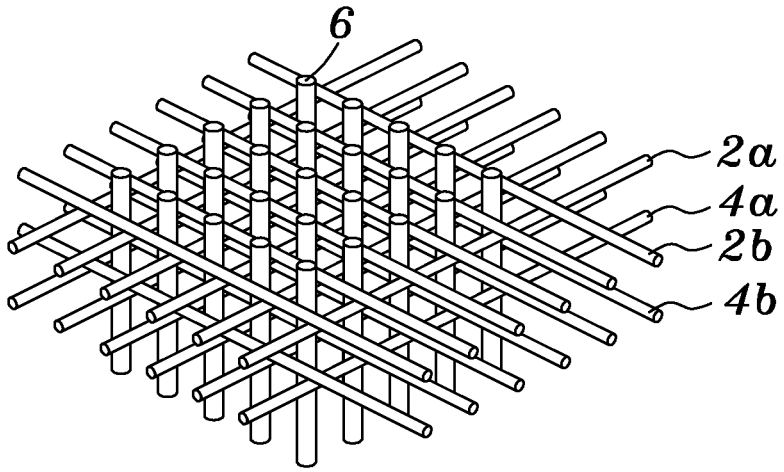

Fig. 4

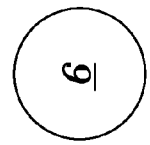

Fig. 5a

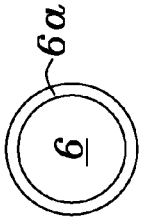

Fig. 5b

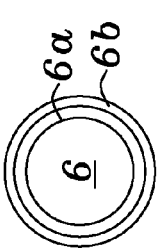

Fig. 5c

Fig. 5d

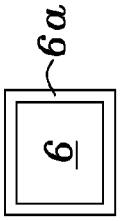

Fig. 5e

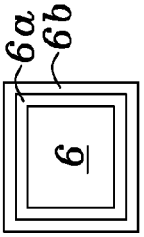

Fig. 5f

Fig. 5g

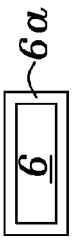

Fig. 5h

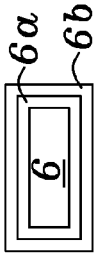

Fig. 5i

MYW Semitech Exhibit 2001
TSMC and Apple v. MYW Semitech - IPR2026-00065

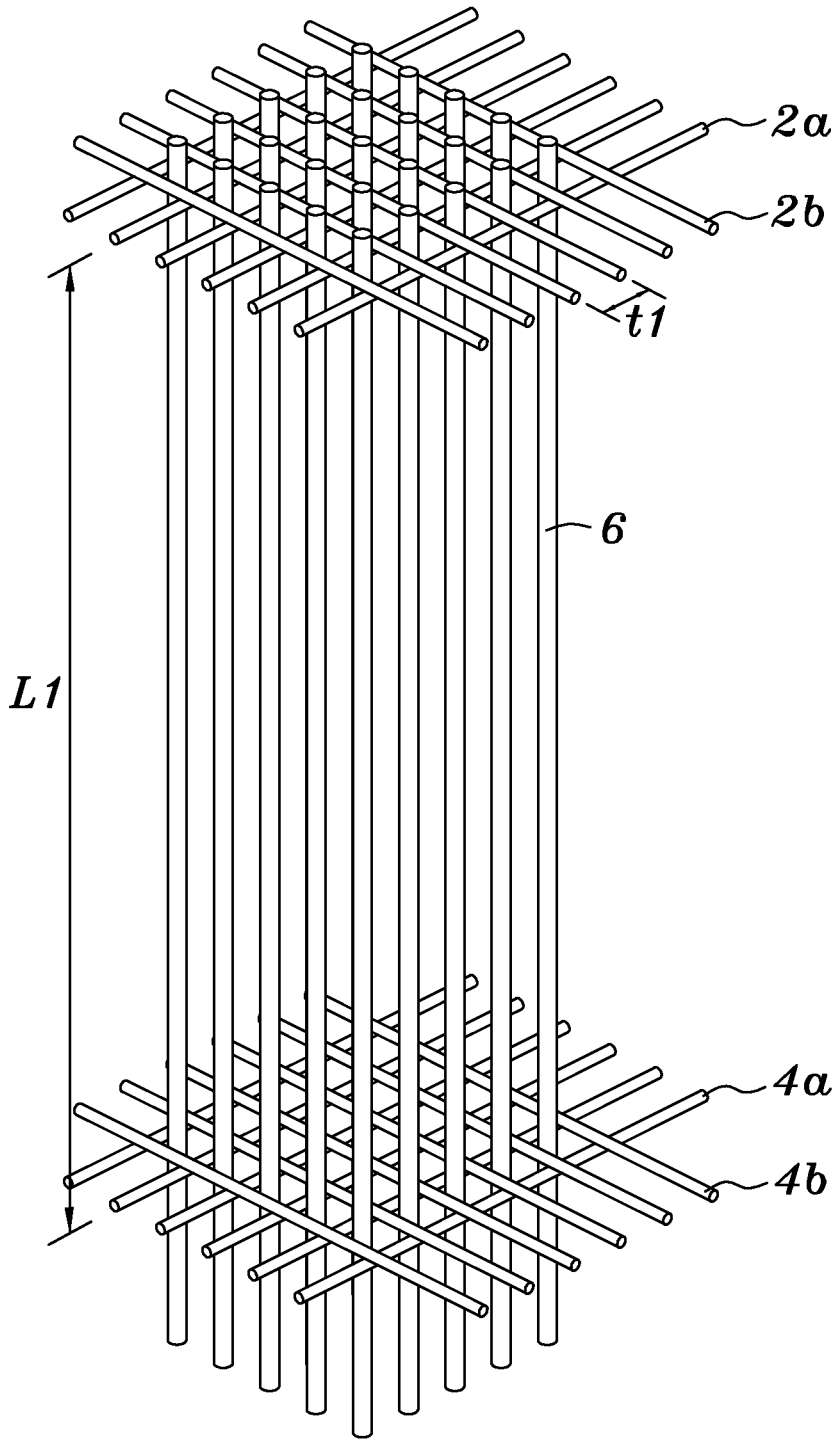

Fig. 6

MYW Semitech Exhibit 2001
TSMC and Apple v. MYW Semitech - IPR2026-00065

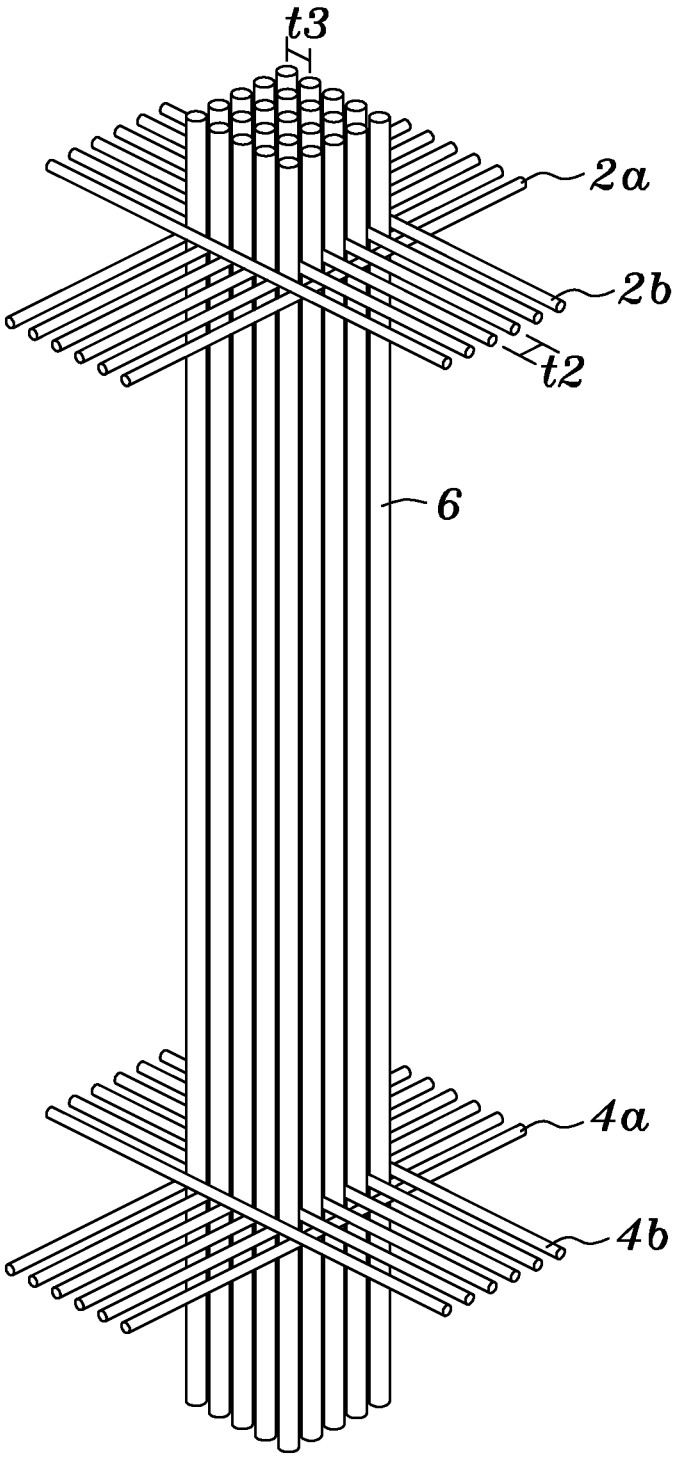

Fig. 7

MYW Semitech Exhibit 2001
TSMC and Apple v. MYW Semitech - IPR2026-00065

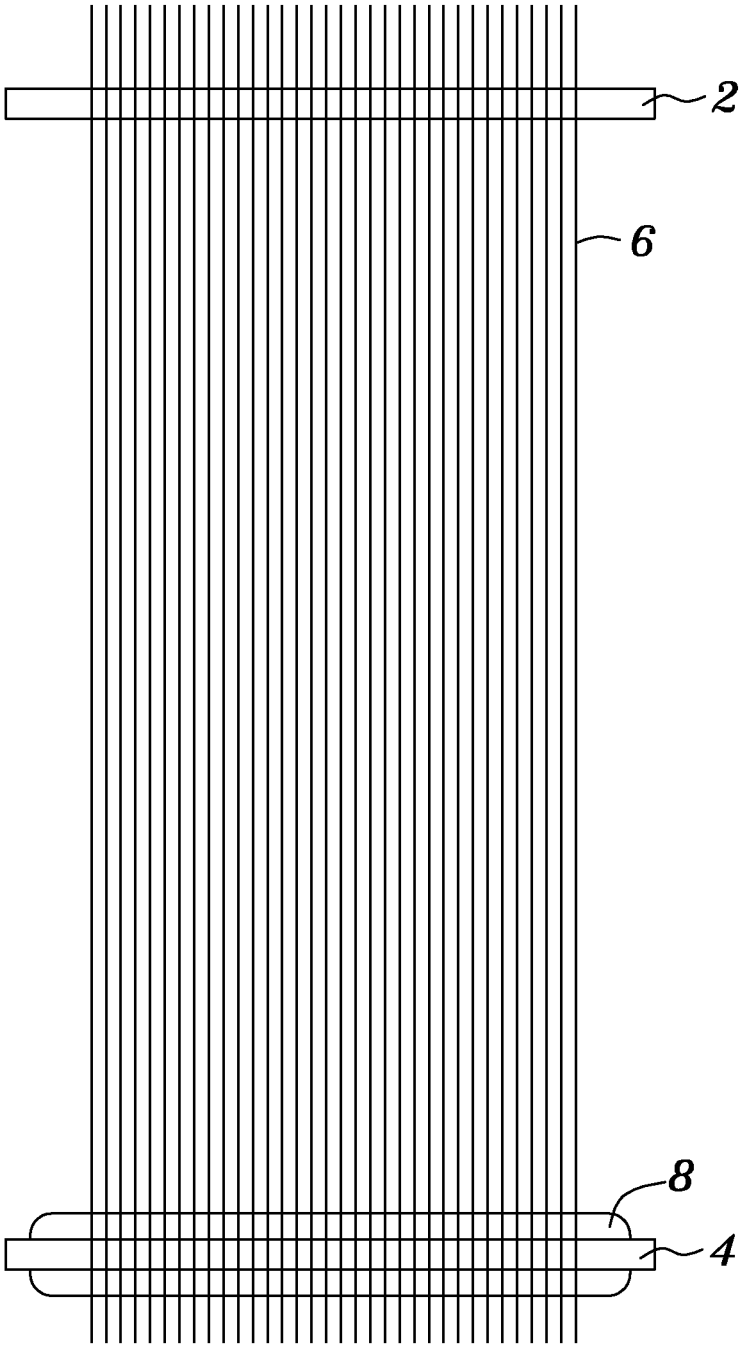

Fig. 8

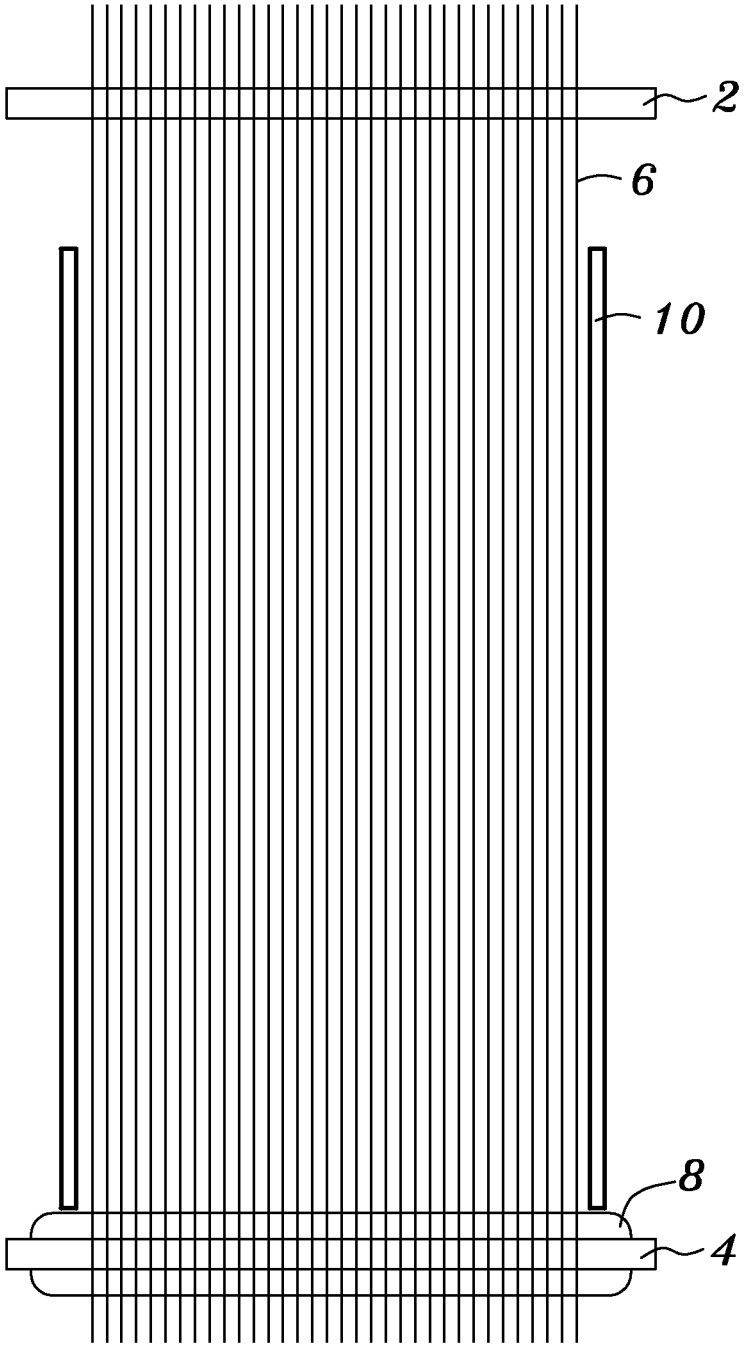

Fig. 9

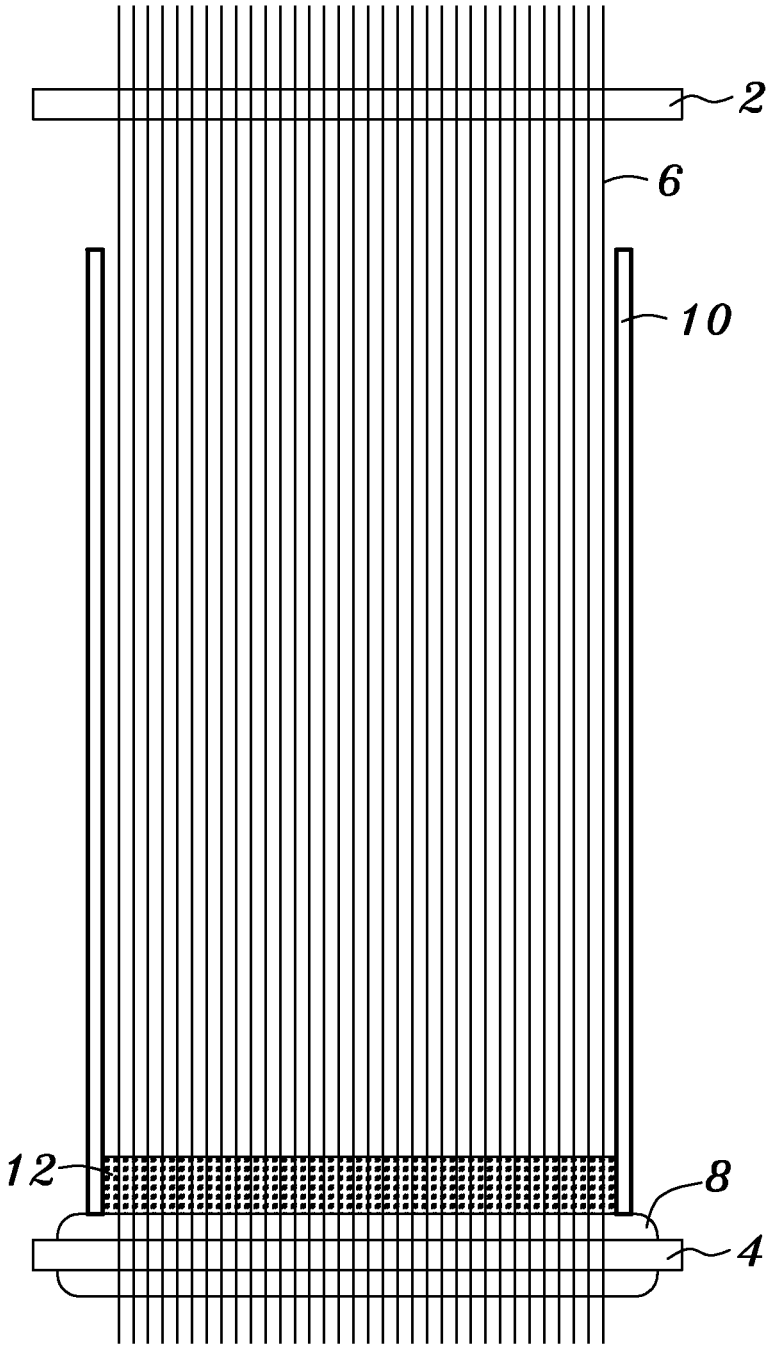

Fig. 10

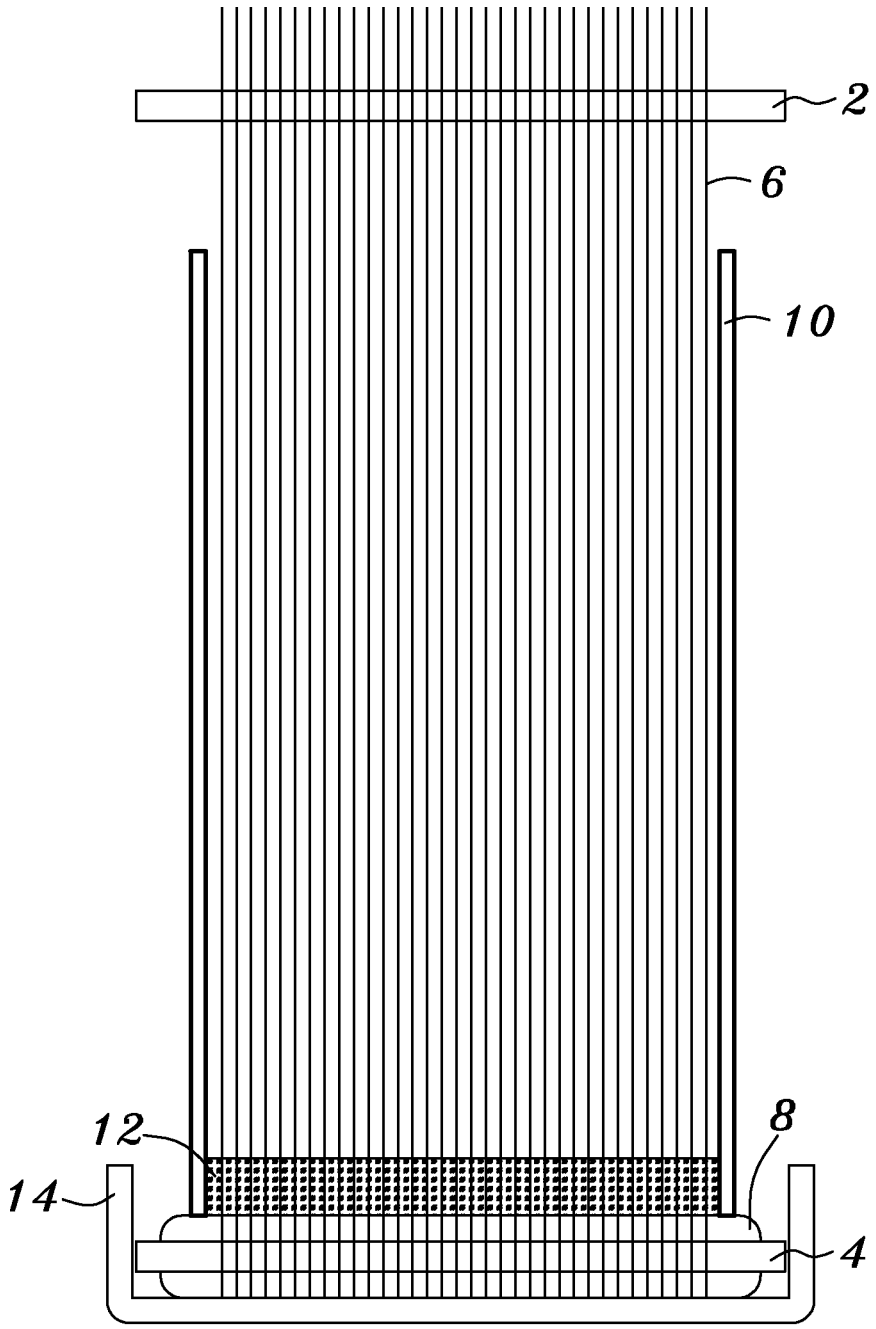

Fig. 11

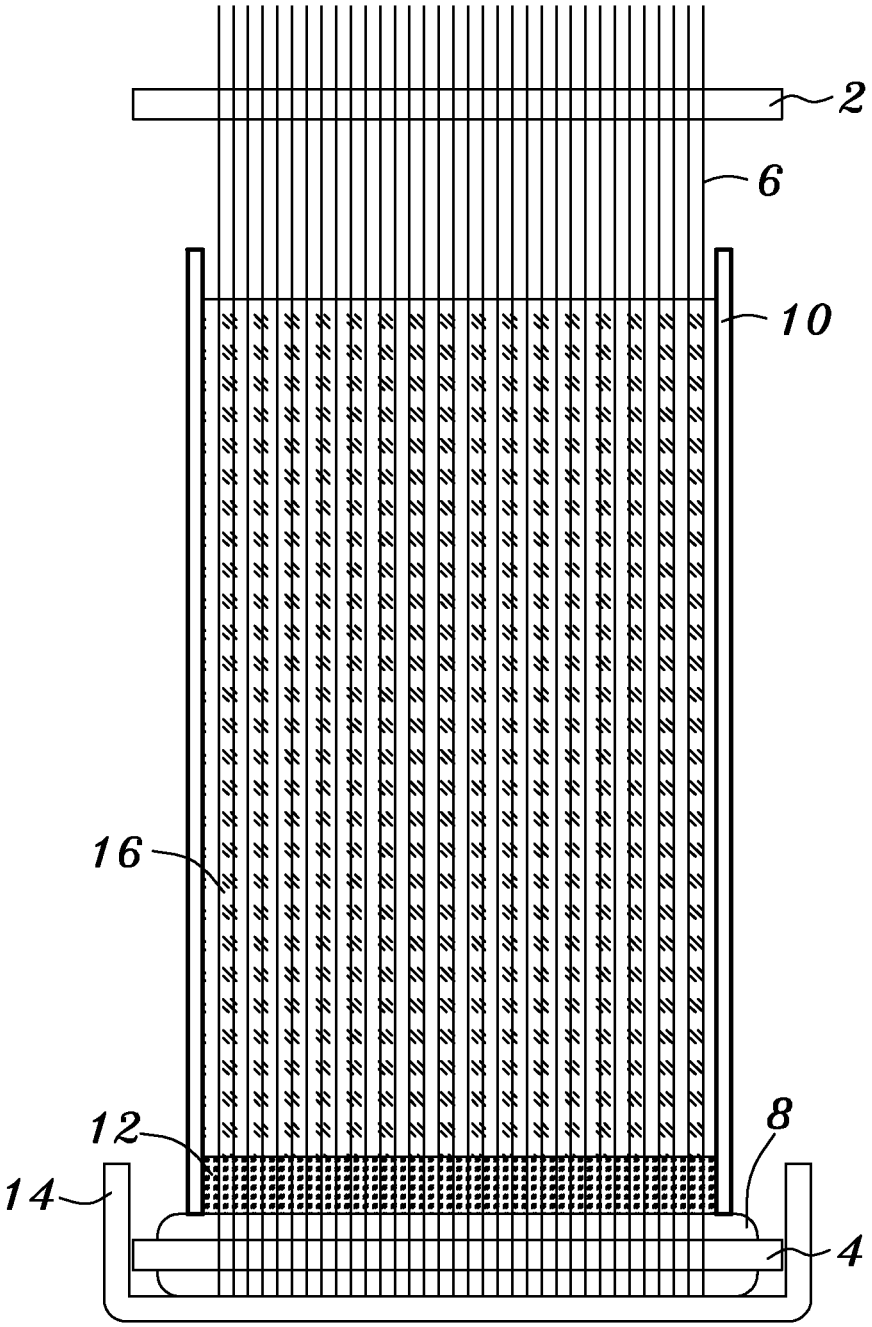

Fig. 12

MYW Semitech Exhibit 2001
TSMC and Apple v. MYW Semitech - IPR2026-00065

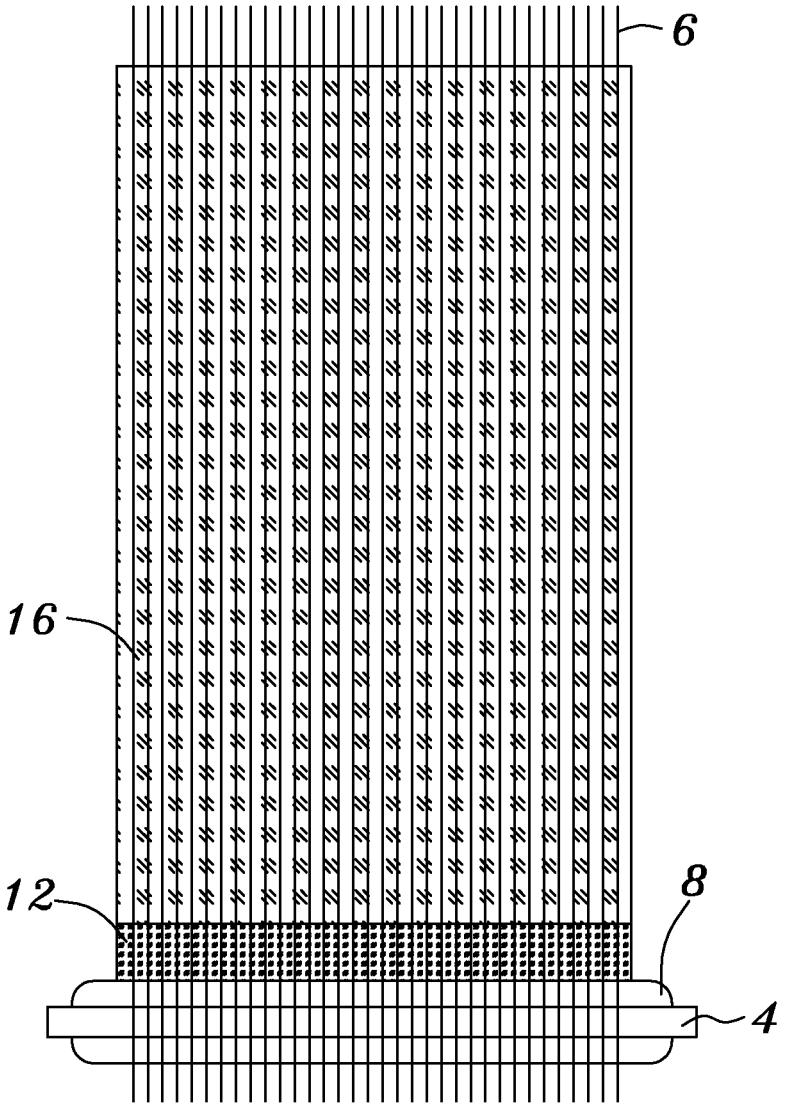

Fig. 13

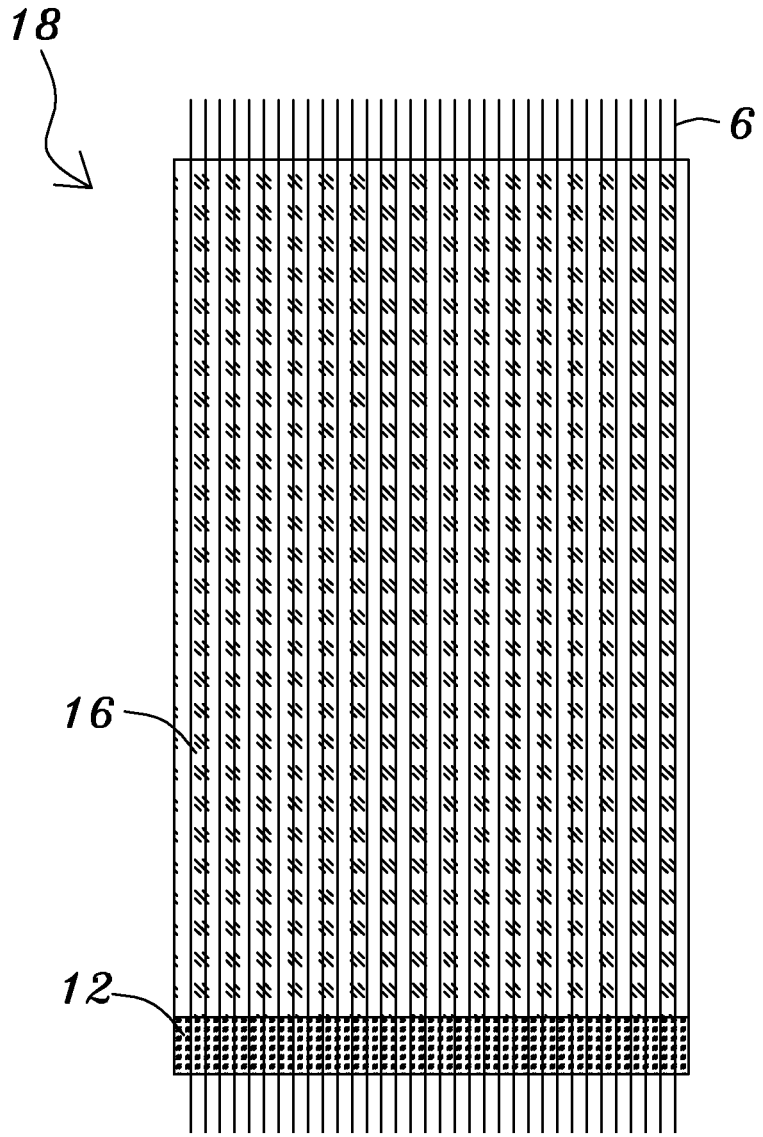

Fig. 14

MYW Semitech Exhibit 2001
TSMC and Apple v. MYW Semitech - IPR2026-00065

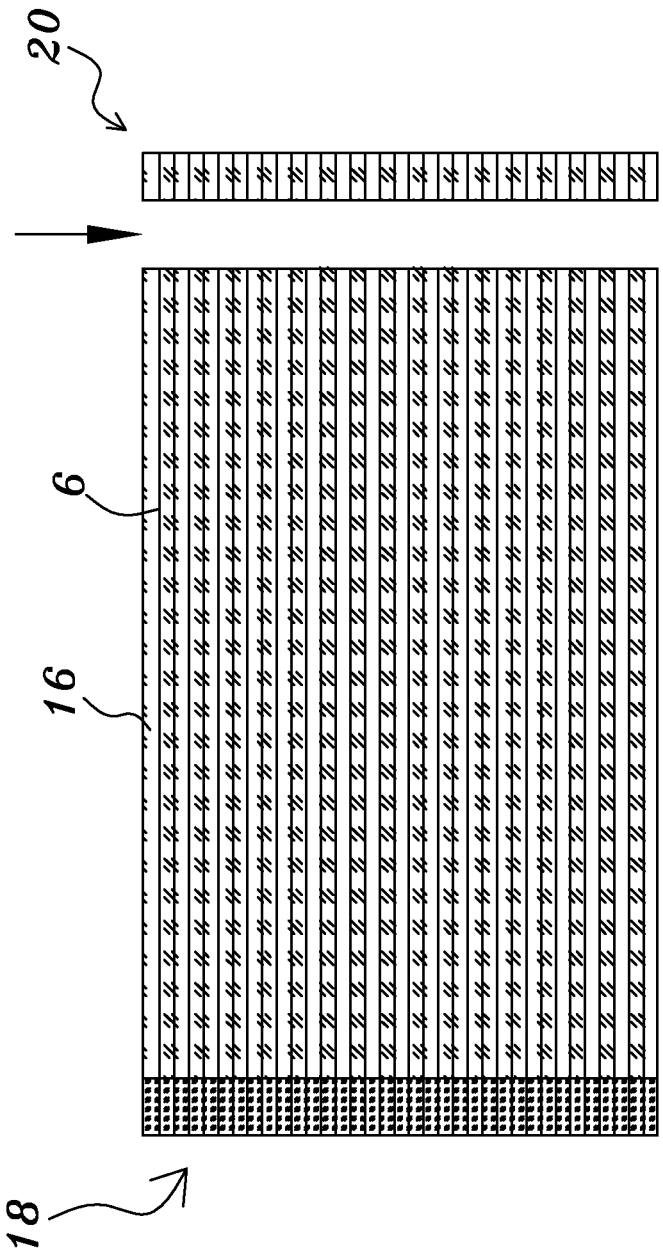

Fig. 15

MYW Semitech Exhibit 2001
TSMC and Apple v. MYW Semitech - IPR2026-00065

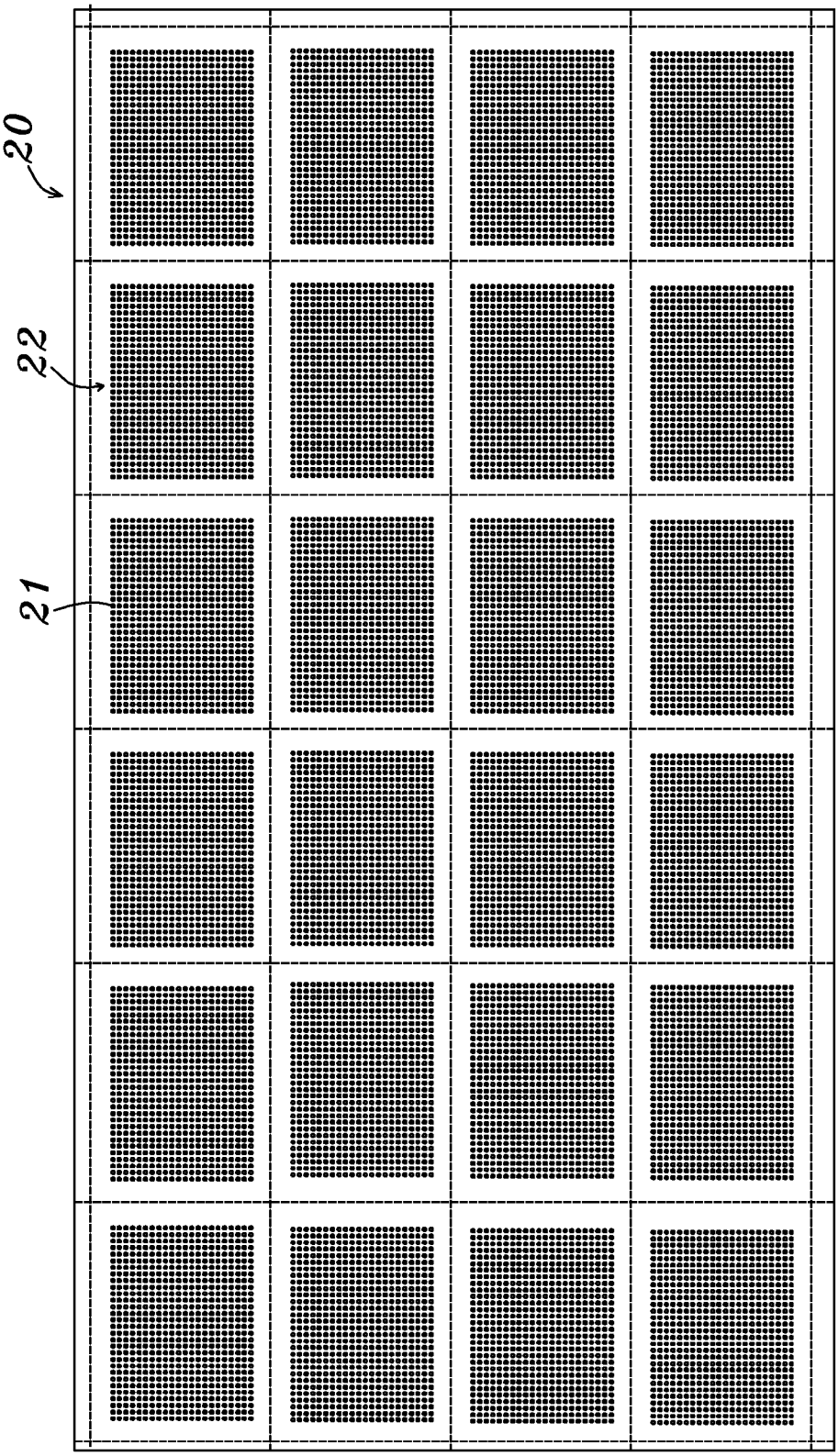

Fig. 16a

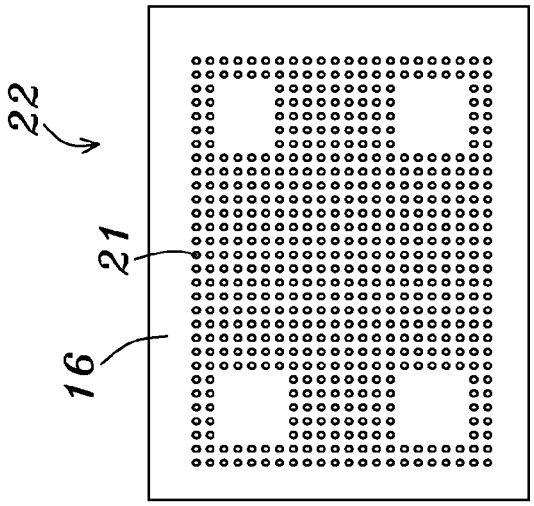

Fig. 16d

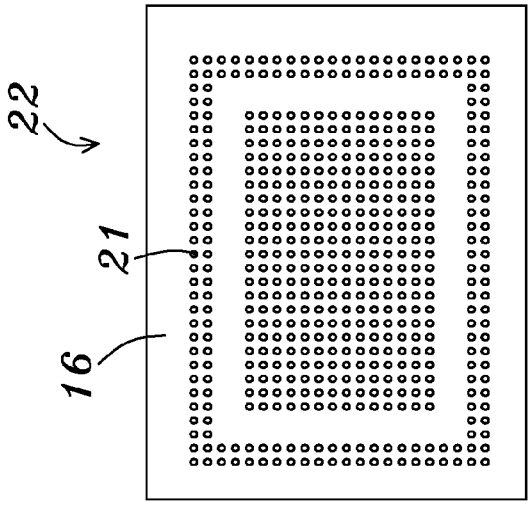

Fig. 16c

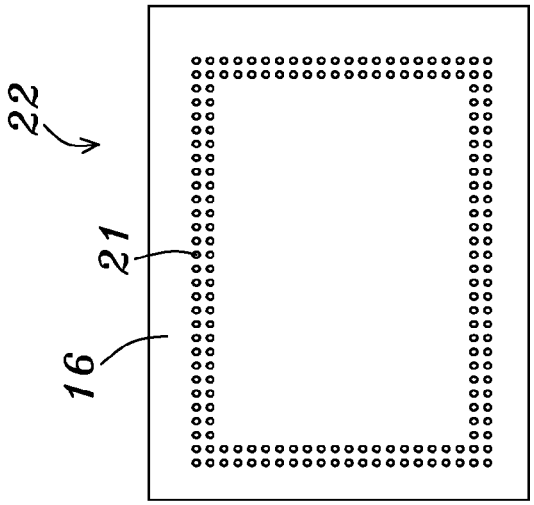

Fig. 16b

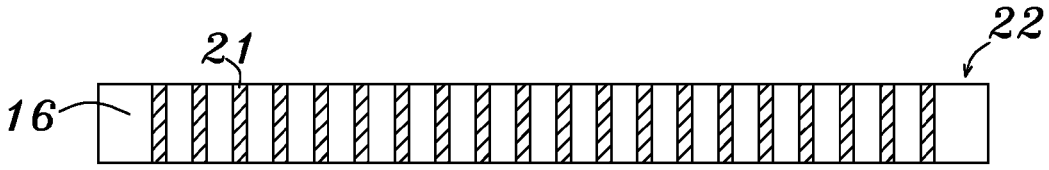

Fig. 17a

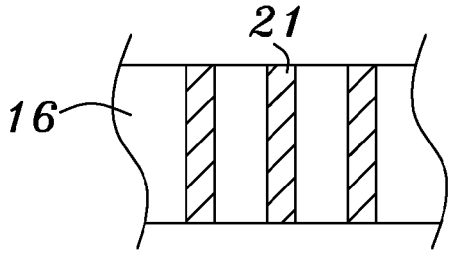

Fig. 17b

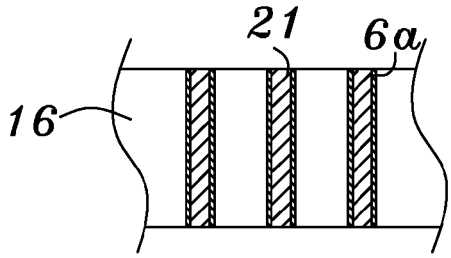

Fig. 17c

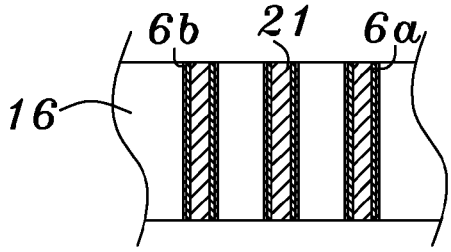

Fig. 17d

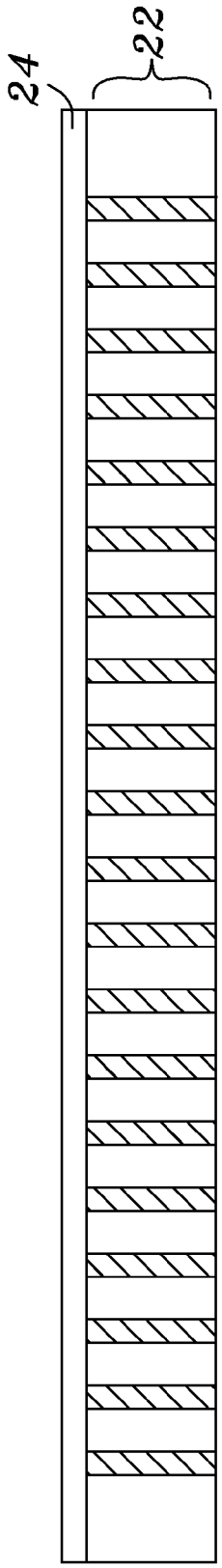

Fig. 18a

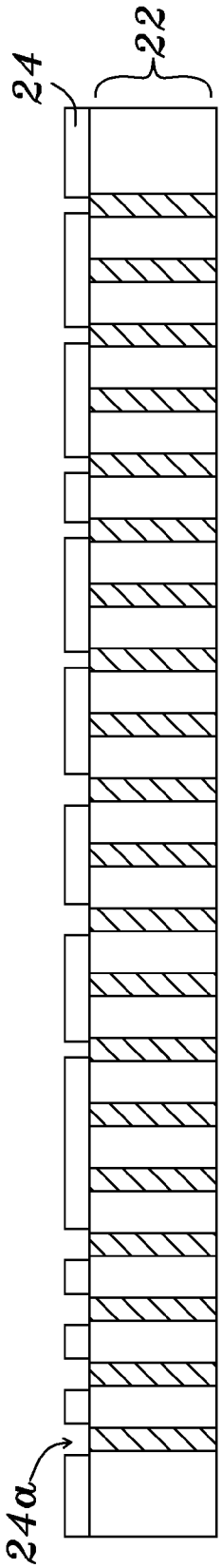

Fig. 18b

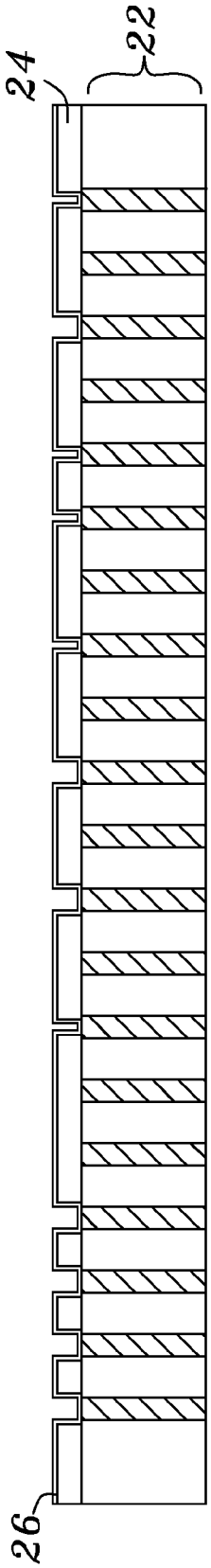

Fig. 18c

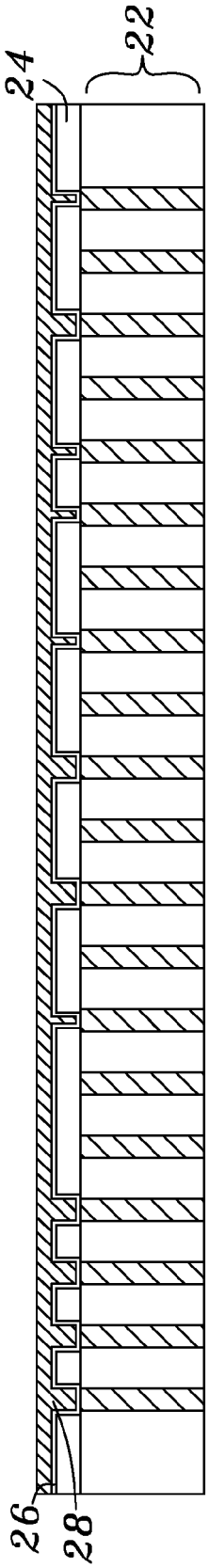

Fig. 18d

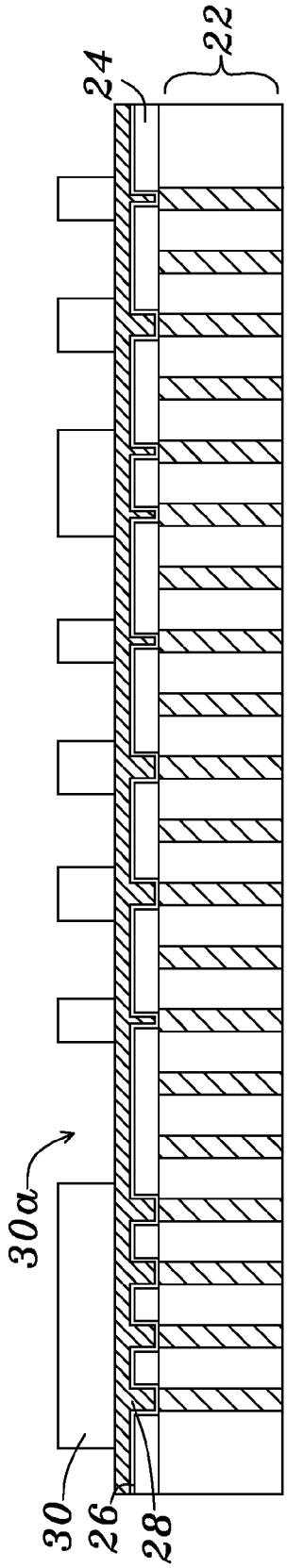

Fig. 18e

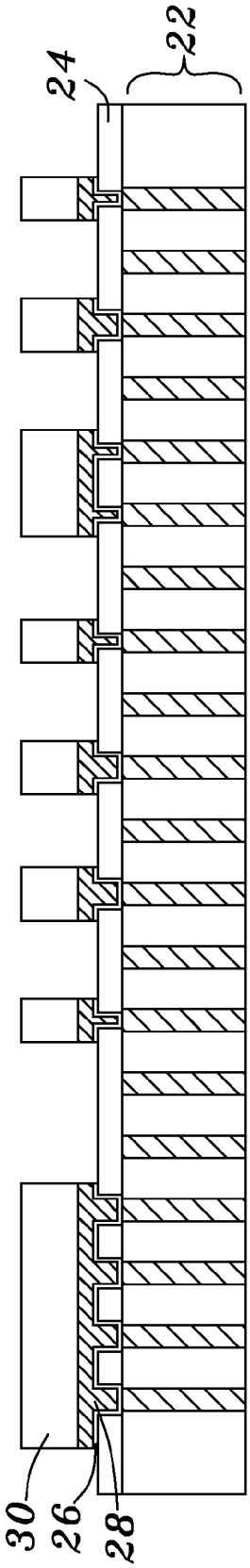

Fig. 18f

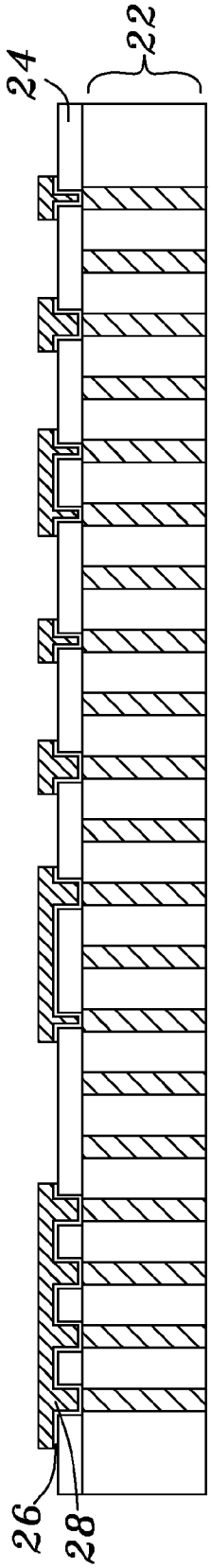

Fig. 18g

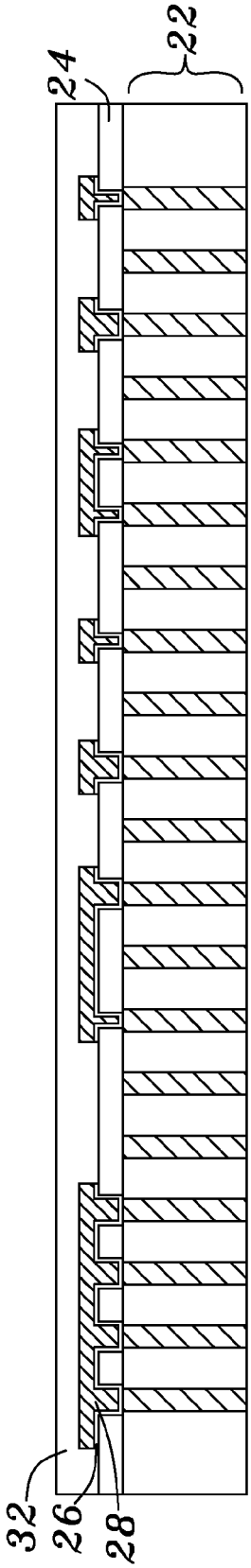

Fig. 18h

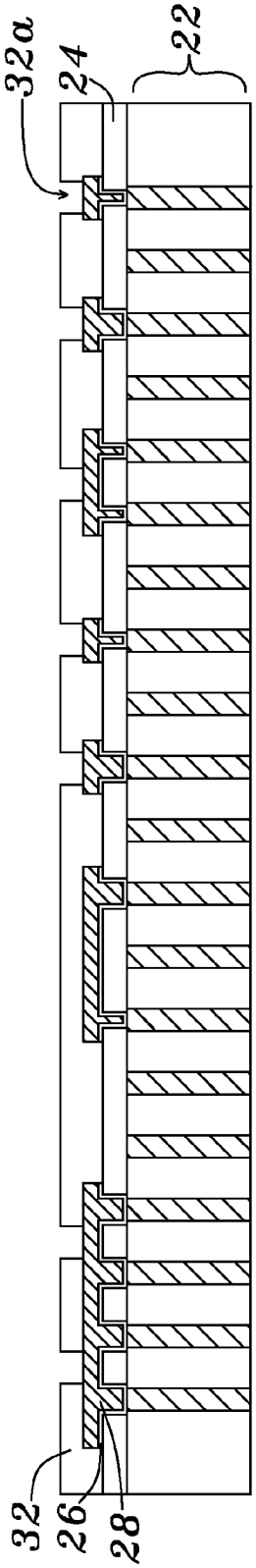

Fig. 18i

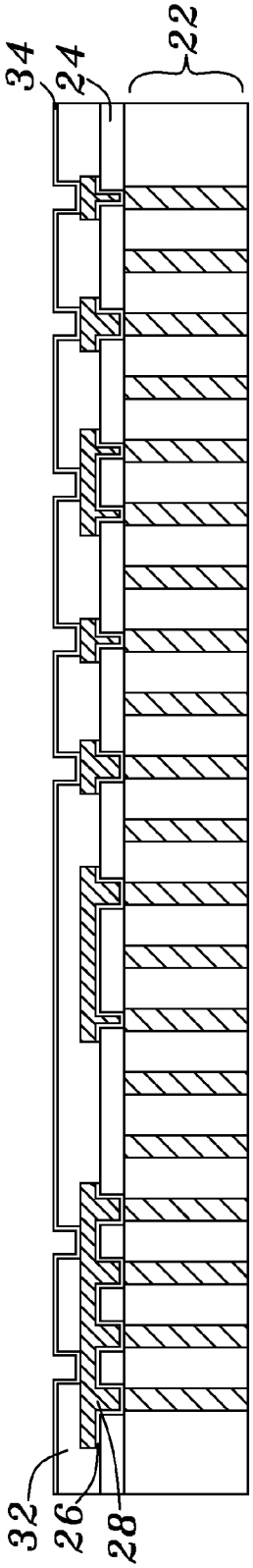

Fig. 18j

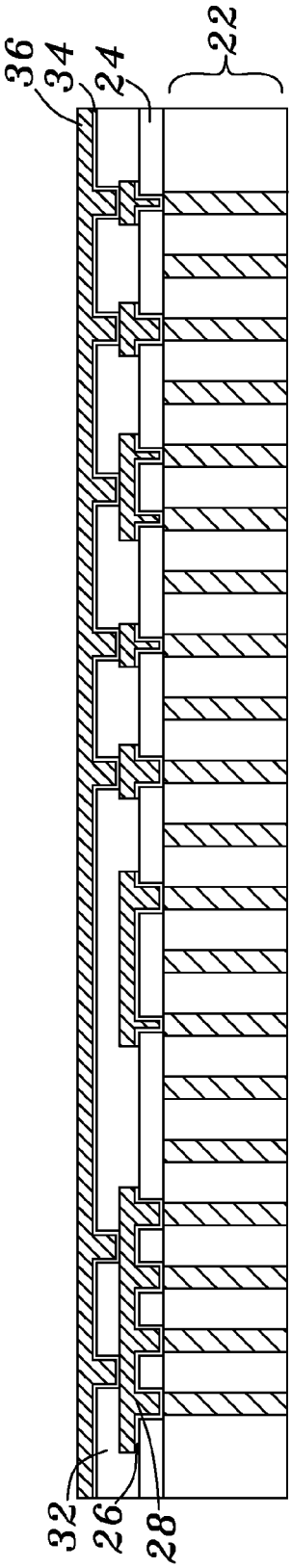

Fig. 18k

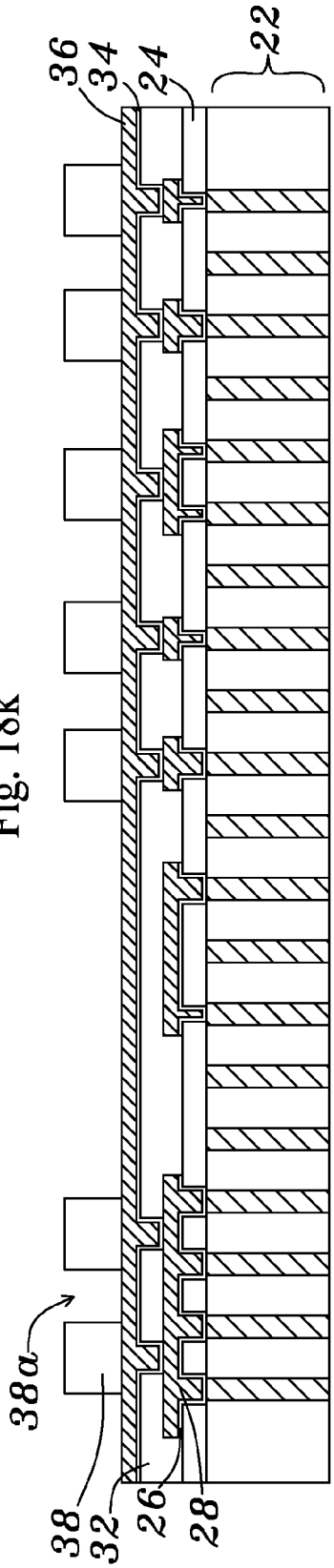

Fig. 18l

MYW Semitech Exhibit 2001
TSMC and Apple v. MYW Semitech - IPR2026-00065

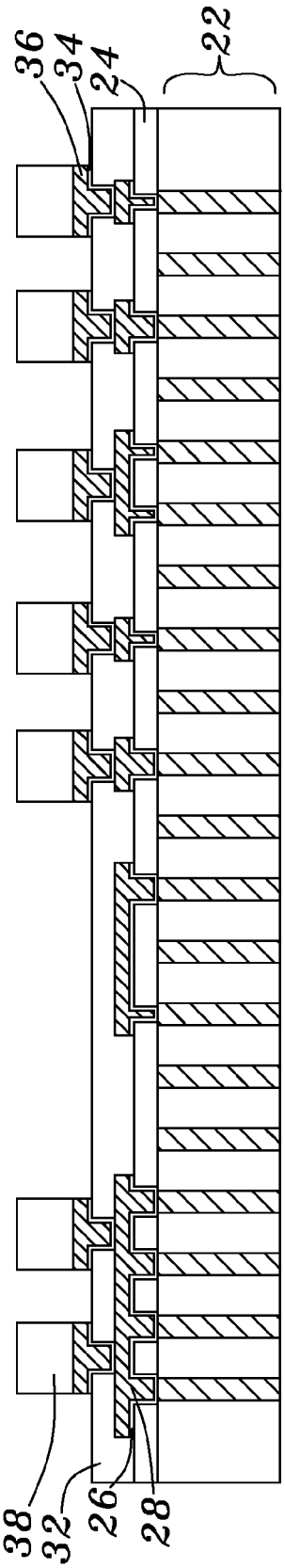

Fig. 18m

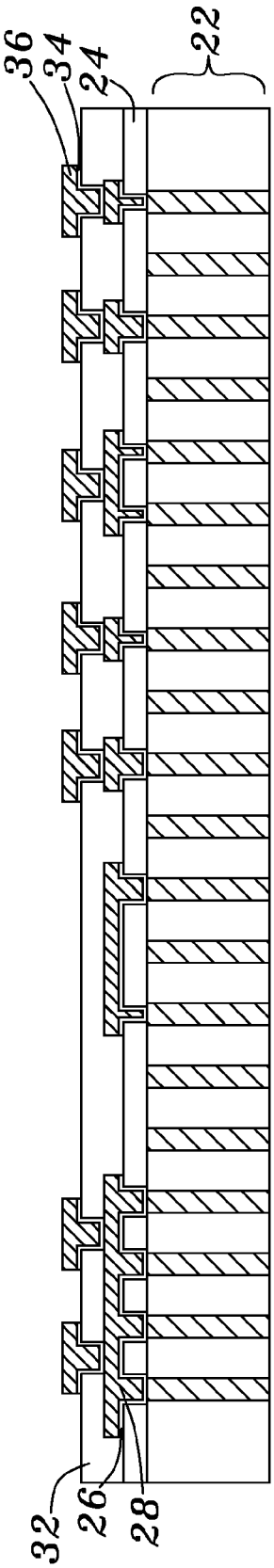

Fig. 18n

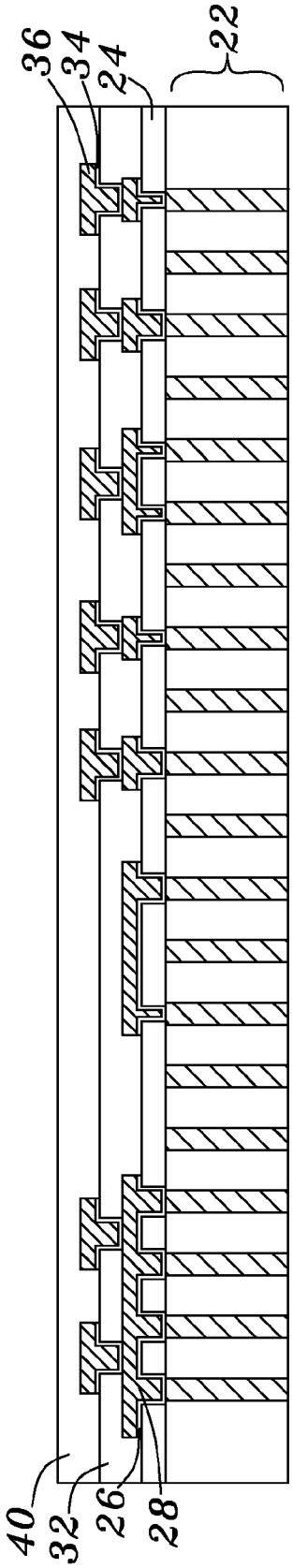

Fig. 18o

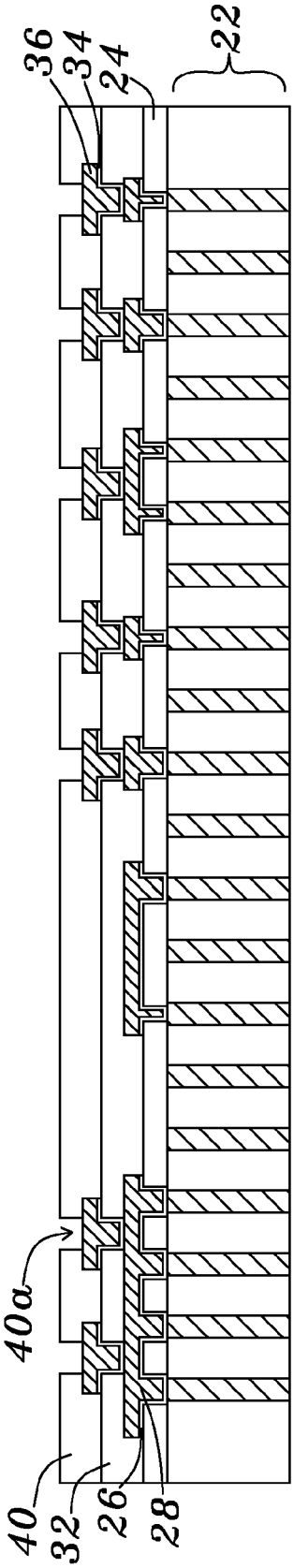

Fig. 18p

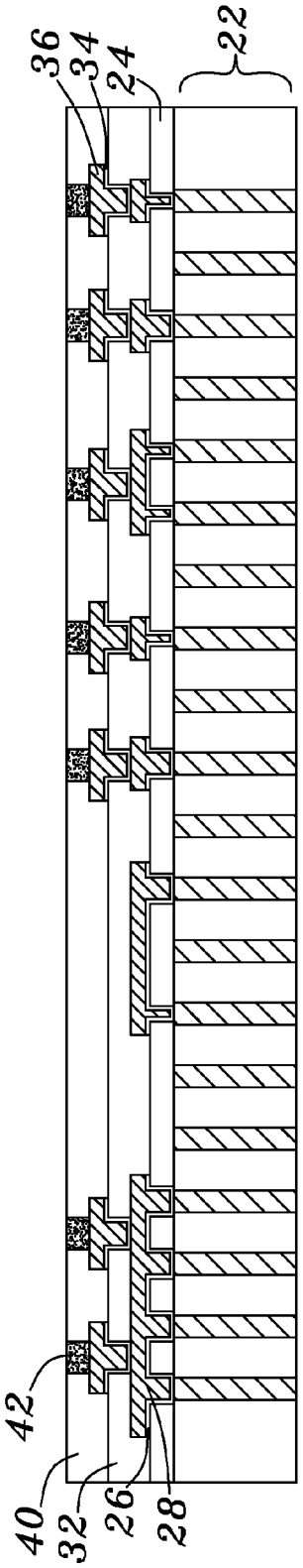

Fig. 18q

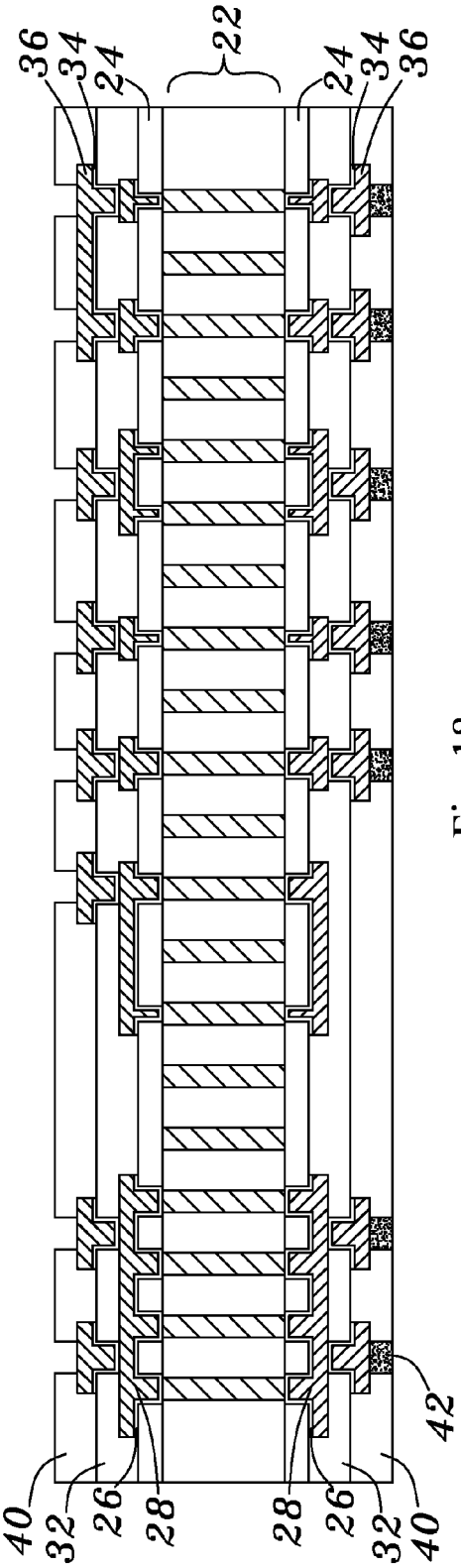

Fig. 18s

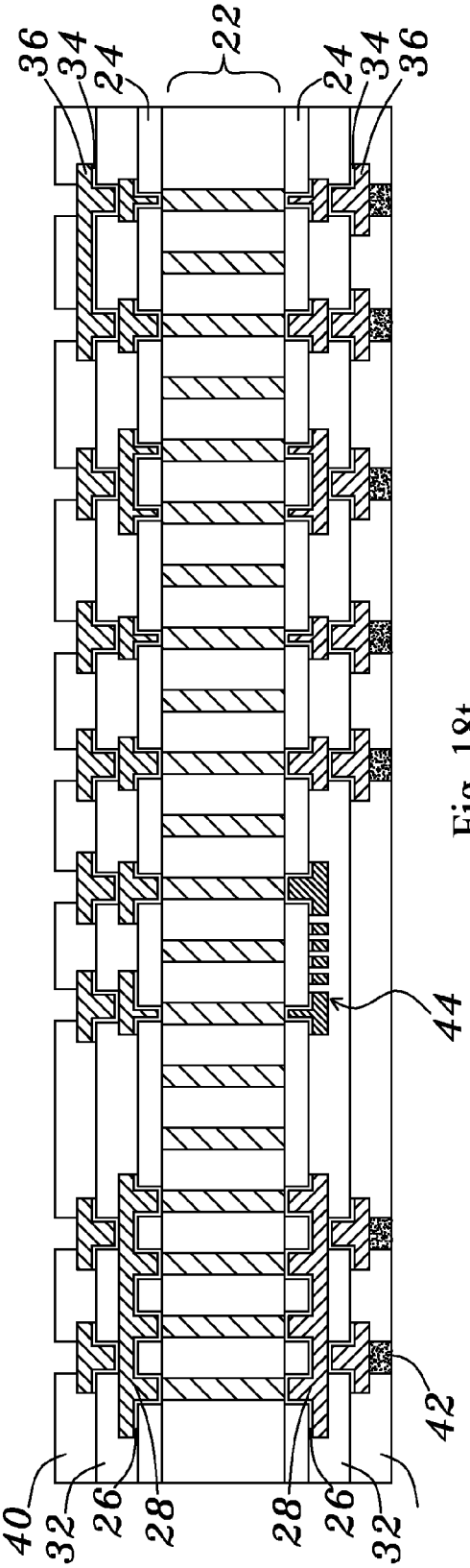

Fig. 18t

MYW Semitech Exhibit 2001
TSMC and Apple v. MYW Semitech - IPR2026-00065

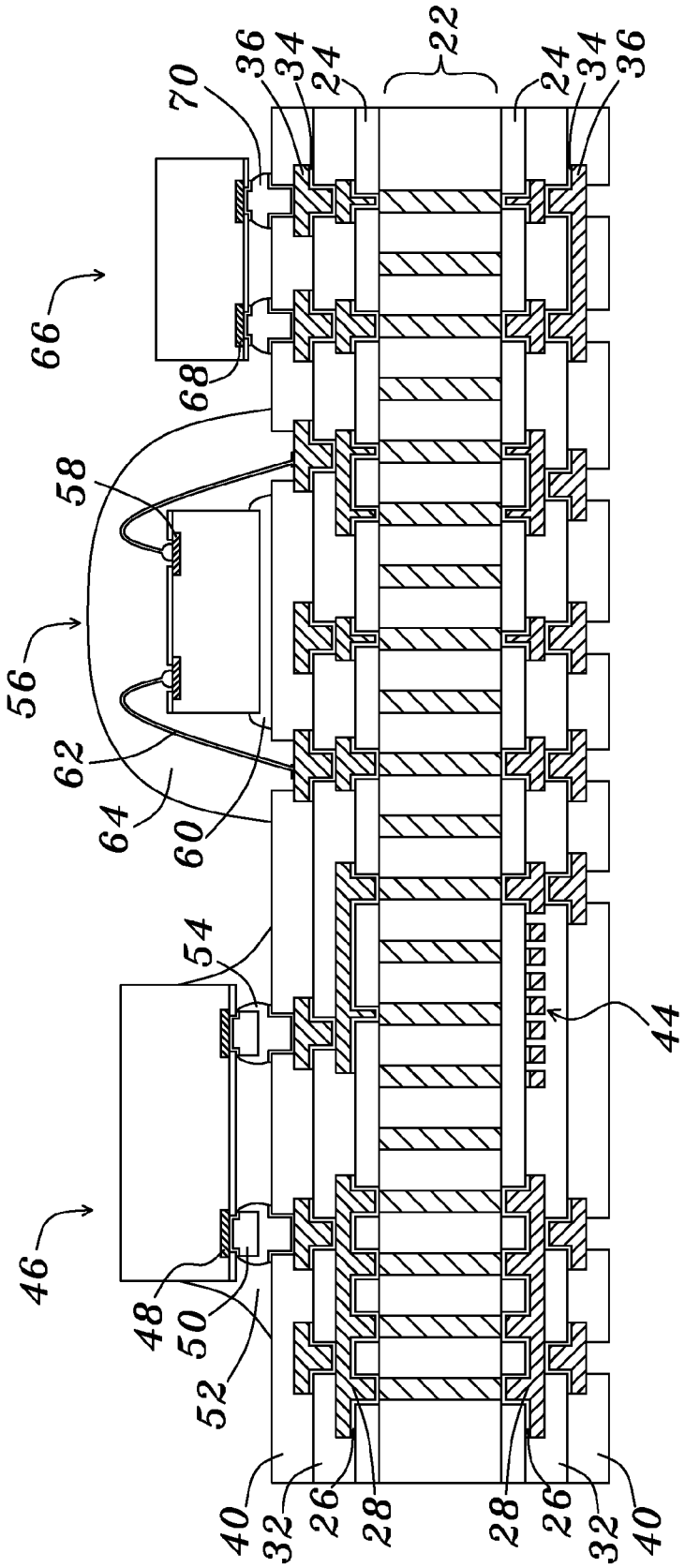

Fig. 18u

MYW Semitech Exhibit 2001
TSMC and Apple v. MYW Semitech - IPR2026-00065

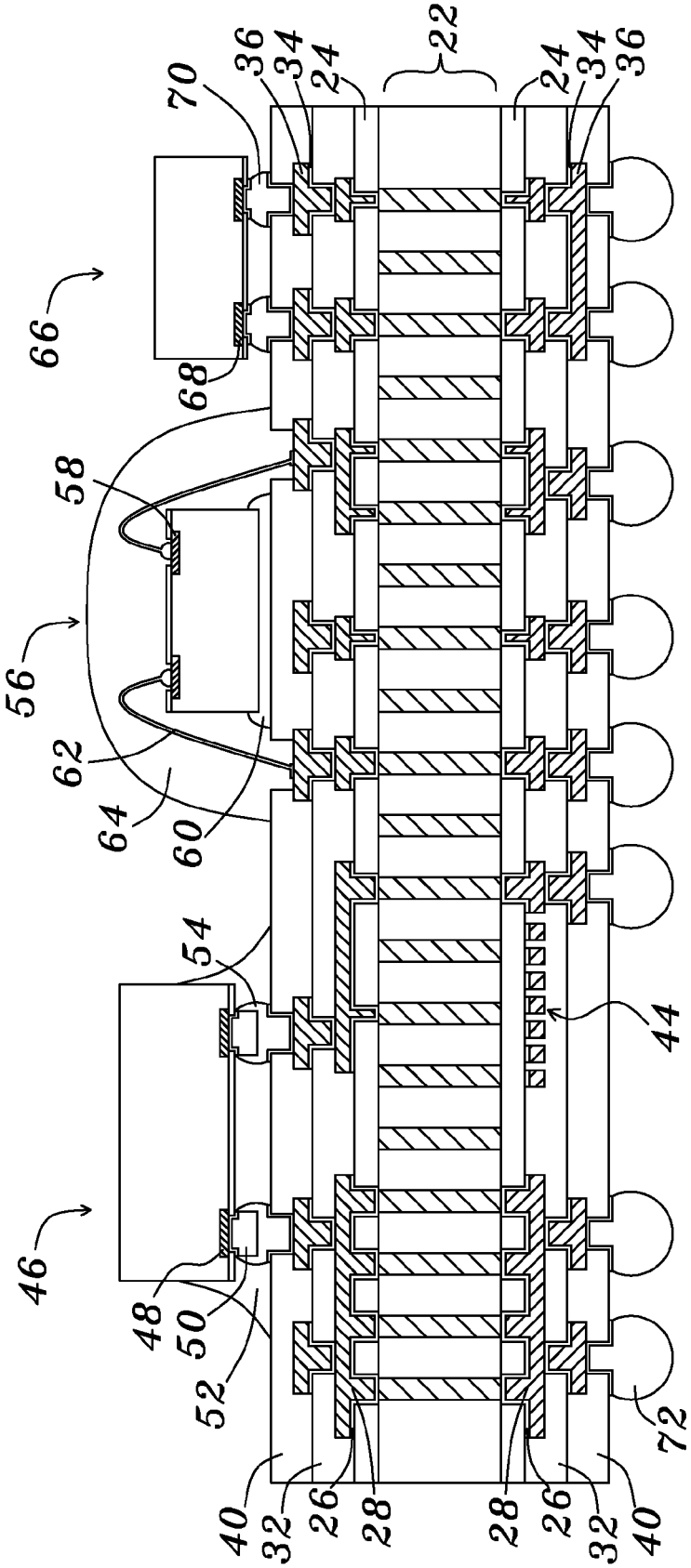

Fig. 18v

MYW Semitech Exhibit 2001
TSMC and Apple v. MYW Semitech - IPR2026-00065

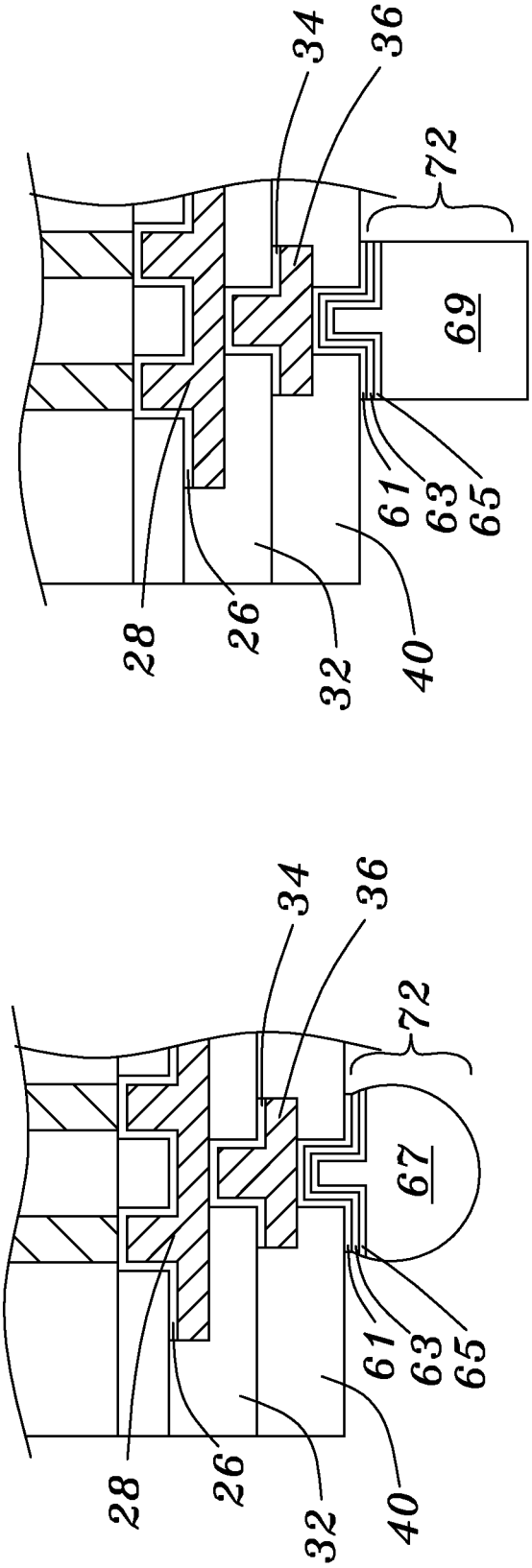

Fig. 18w

MYW Semitech Exhibit 2001
TSMC and Apple v. MYW Semitech - IPR2026-00065

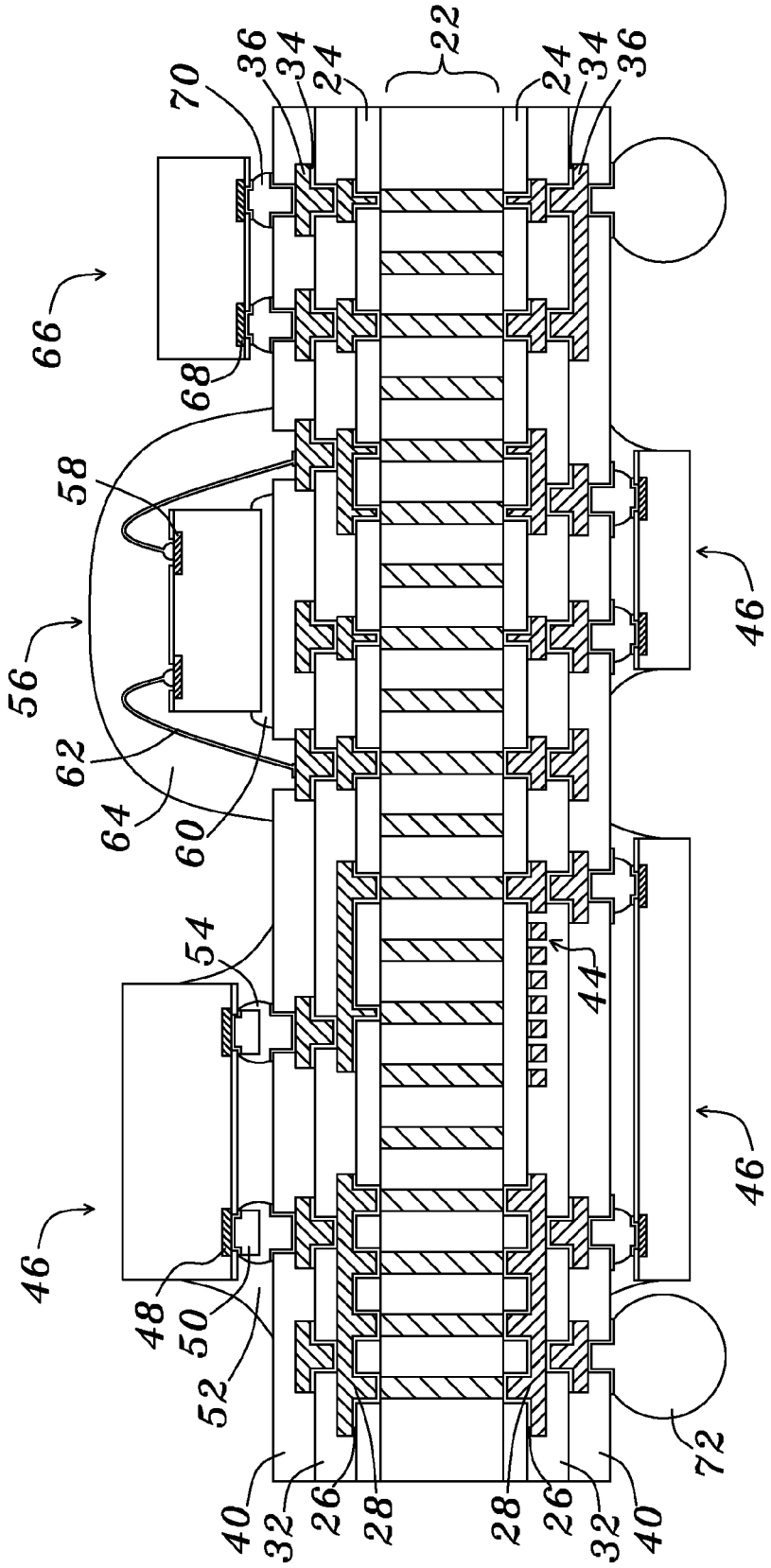

Fig. 18x

MYW Semitech Exhibit 2001
TSMC and Apple v. MYW Semitech - IPR2026-00065

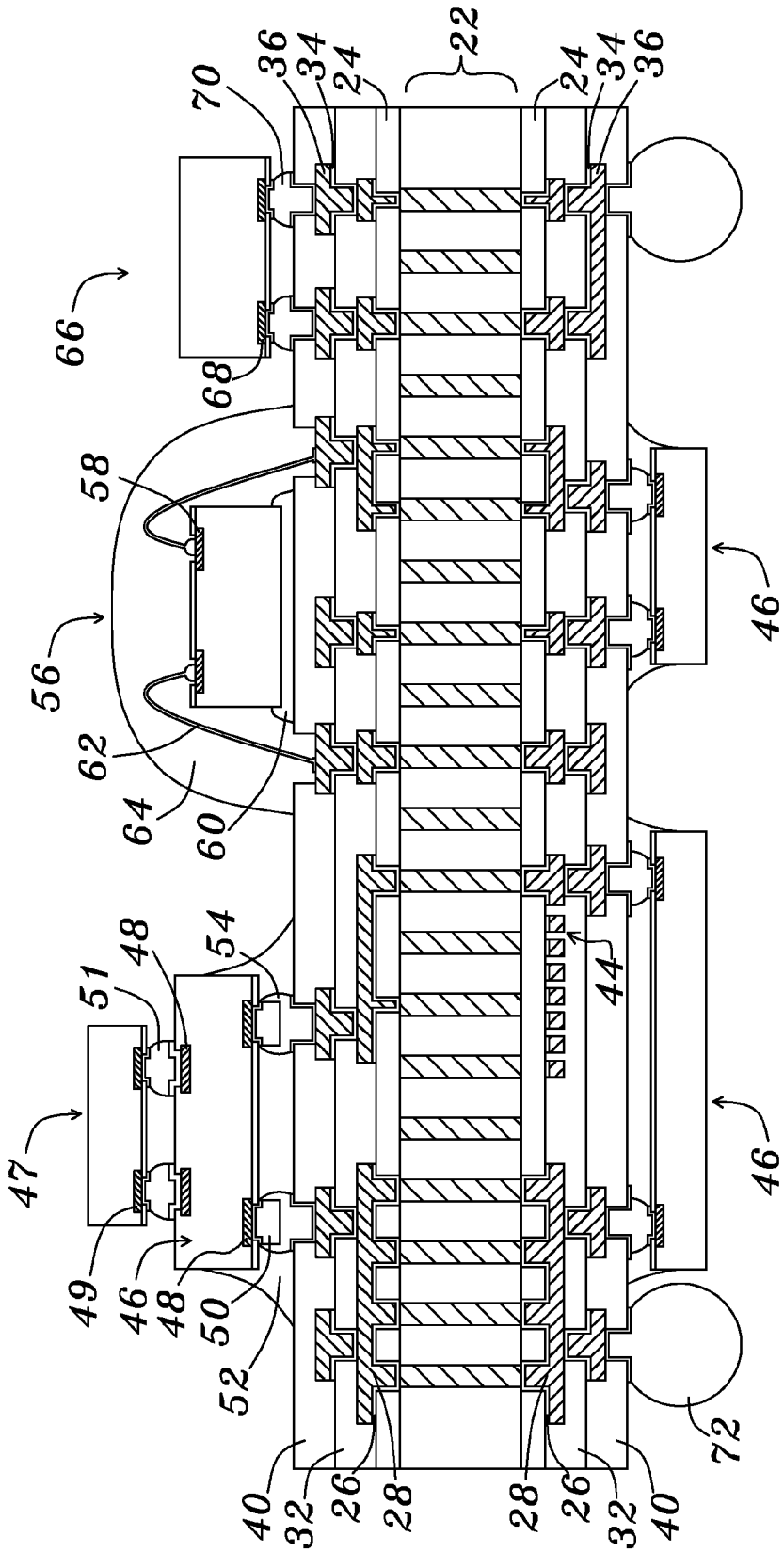

Fig. 18y

MYW Semitech Exhibit 2001
TSMC and Apple v. MYW Semitech - IPR2026-00065

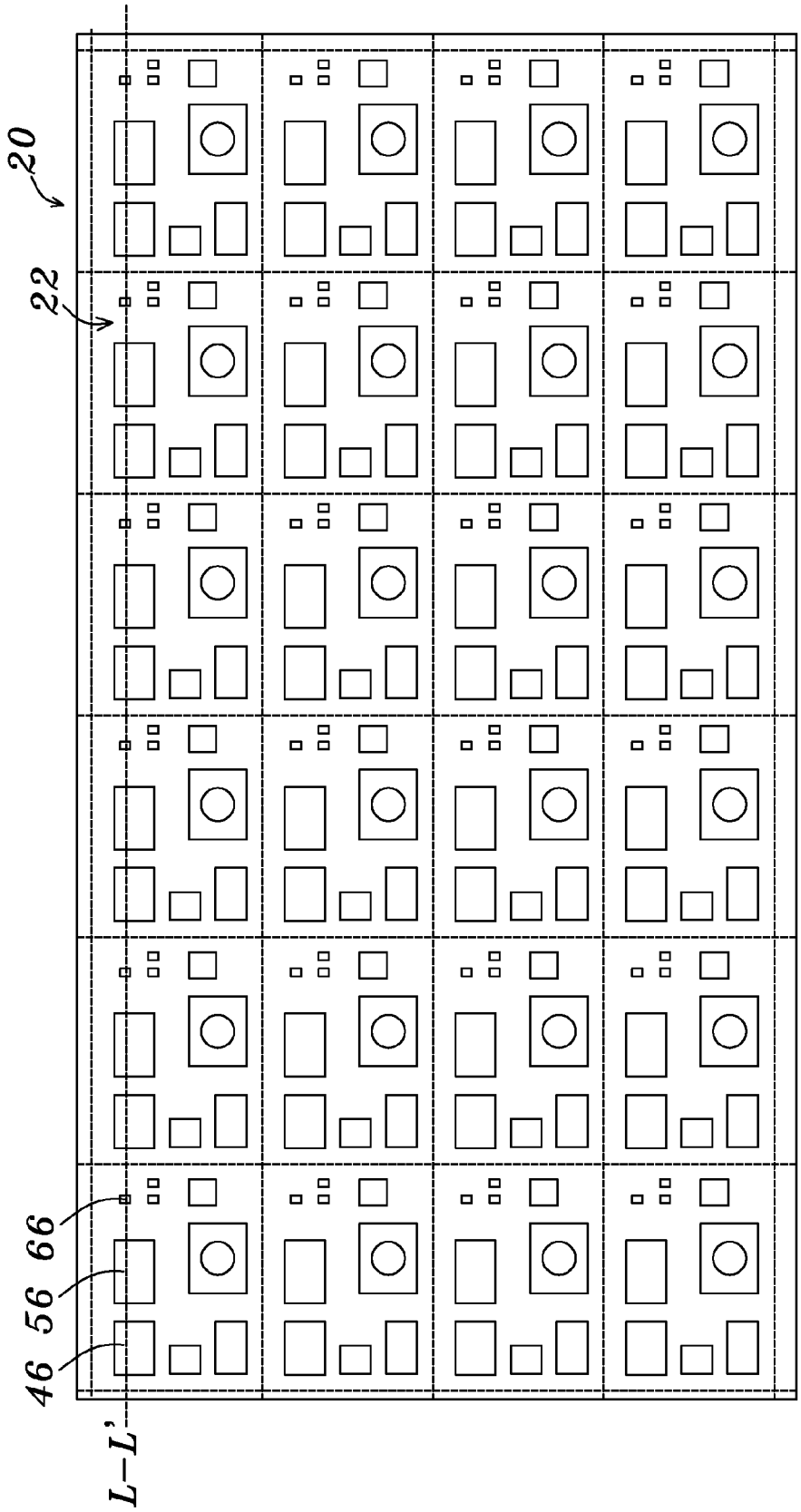

Fig. 18z

MYW Semitech Exhibit 2001
TSMC and Apple v. MYW Semitech - IPR2026-00065

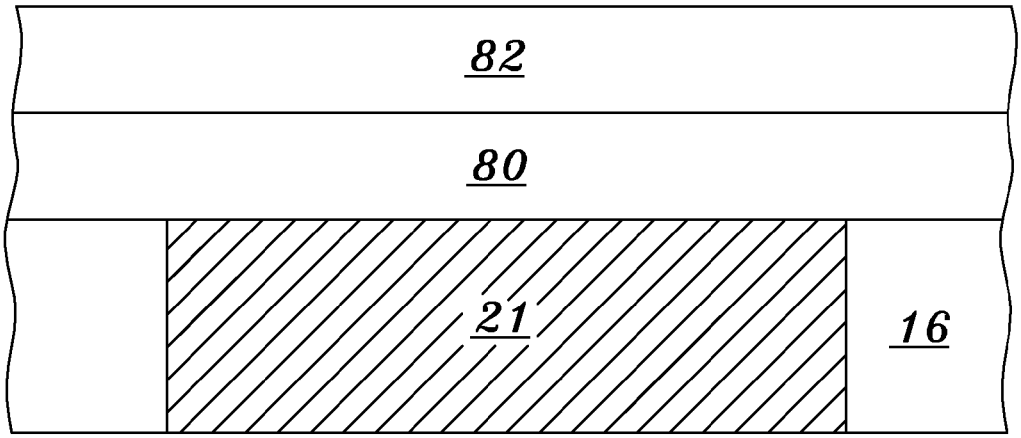

Fig. 19a

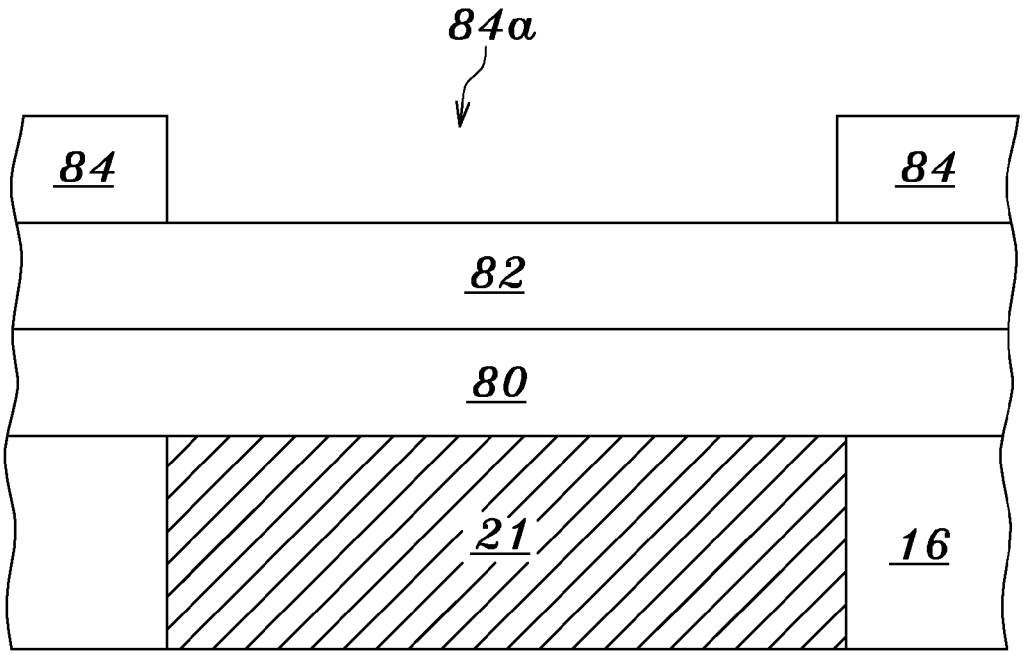

Fig. 19b

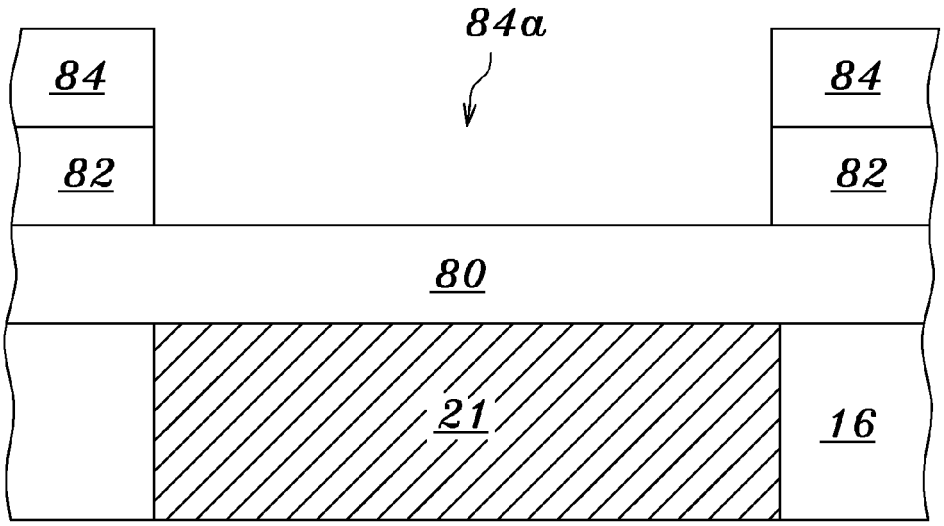

Fig. 19c

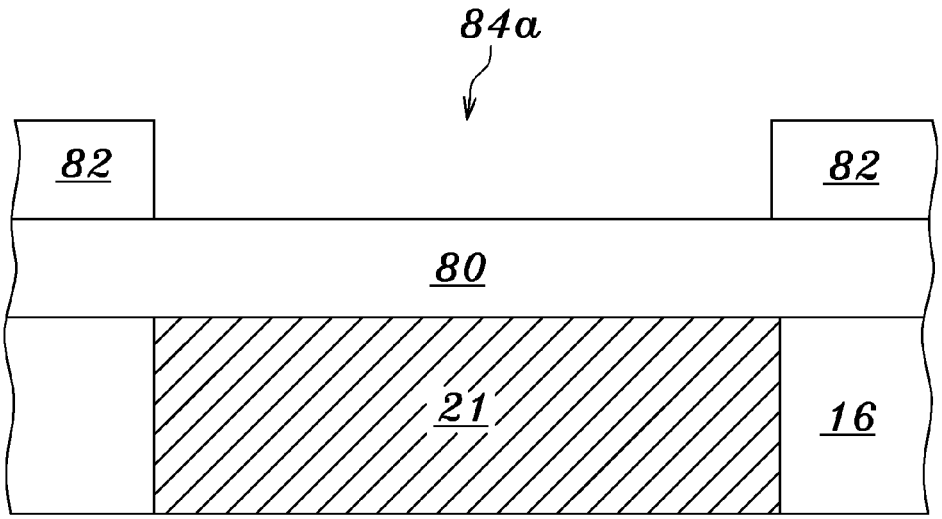

Fig. 19d

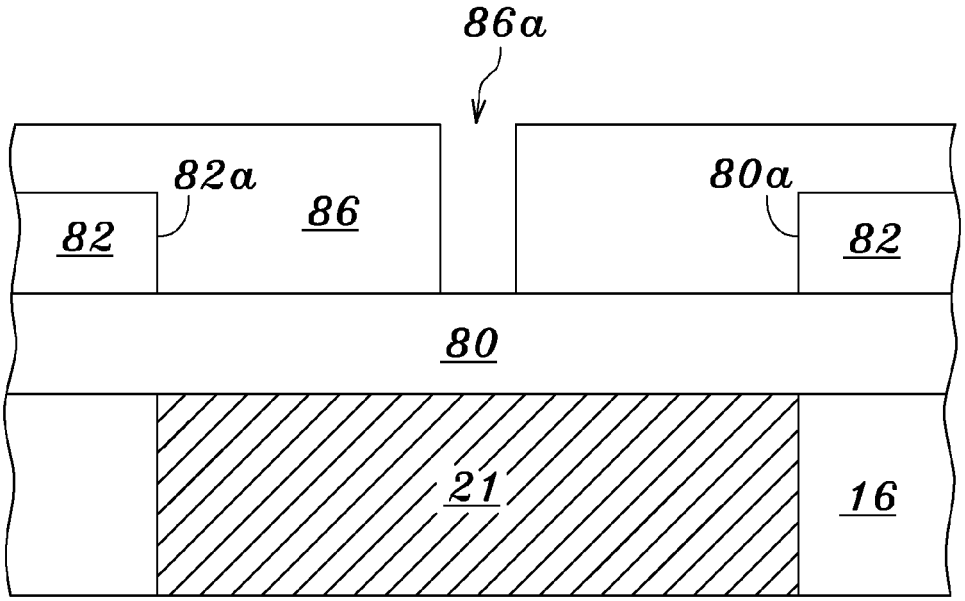

Fig. 19e

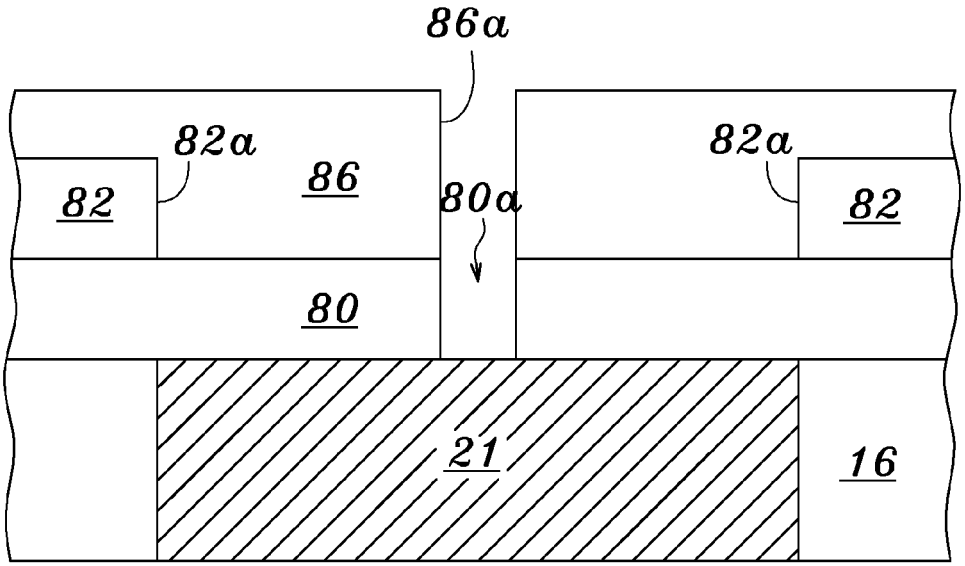

Fig. 19f

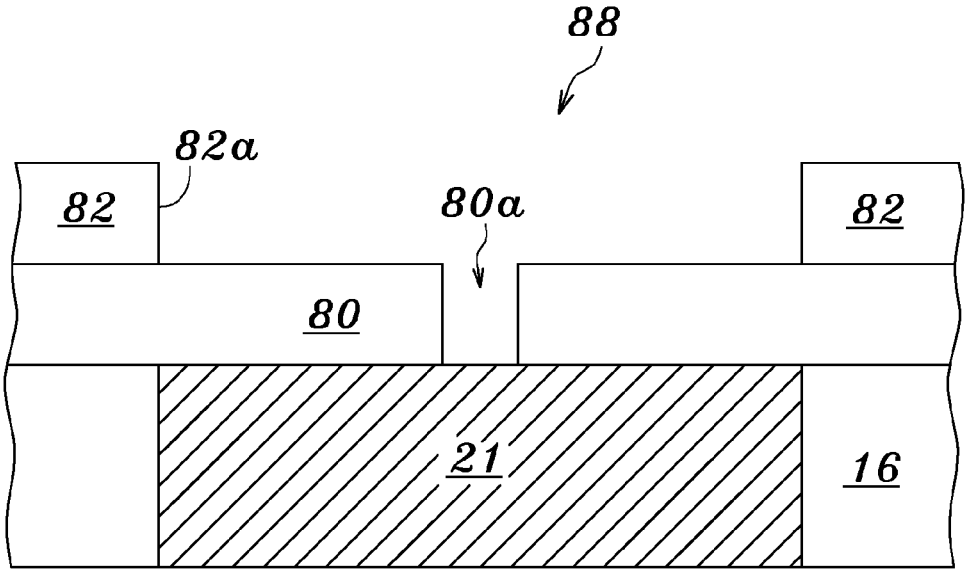

Fig. 19g

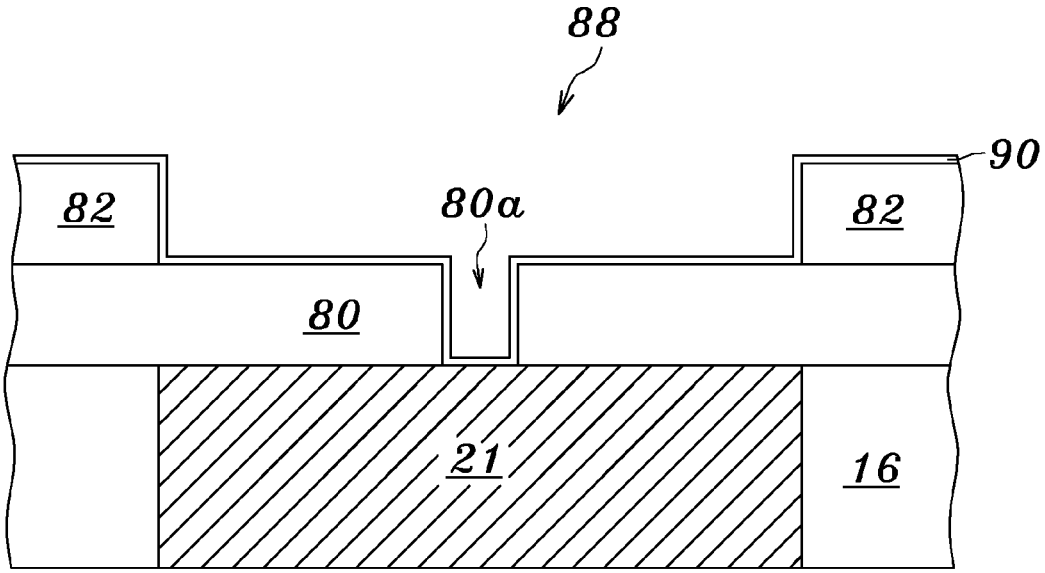

Fig. 19h

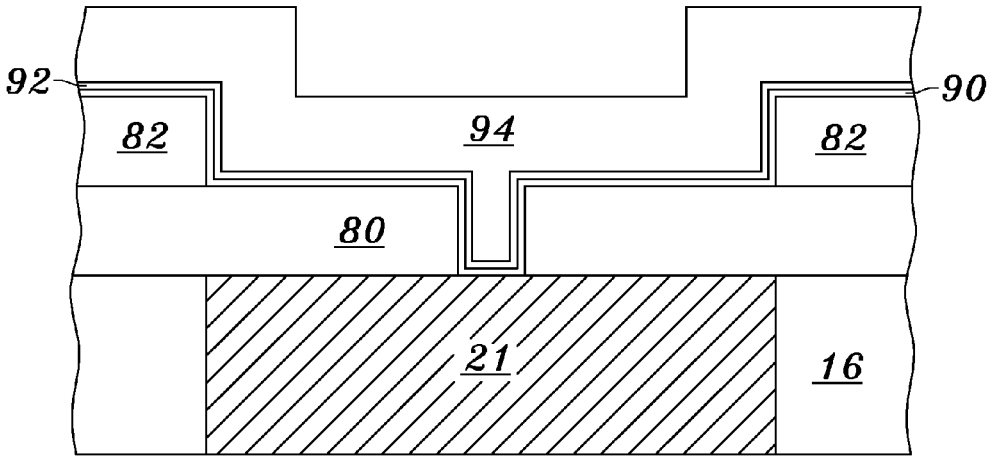

Fig. 19i

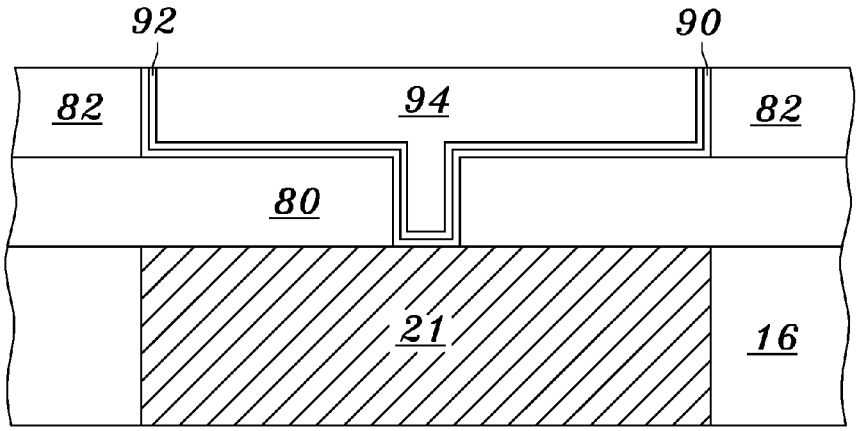

Fig. 19j

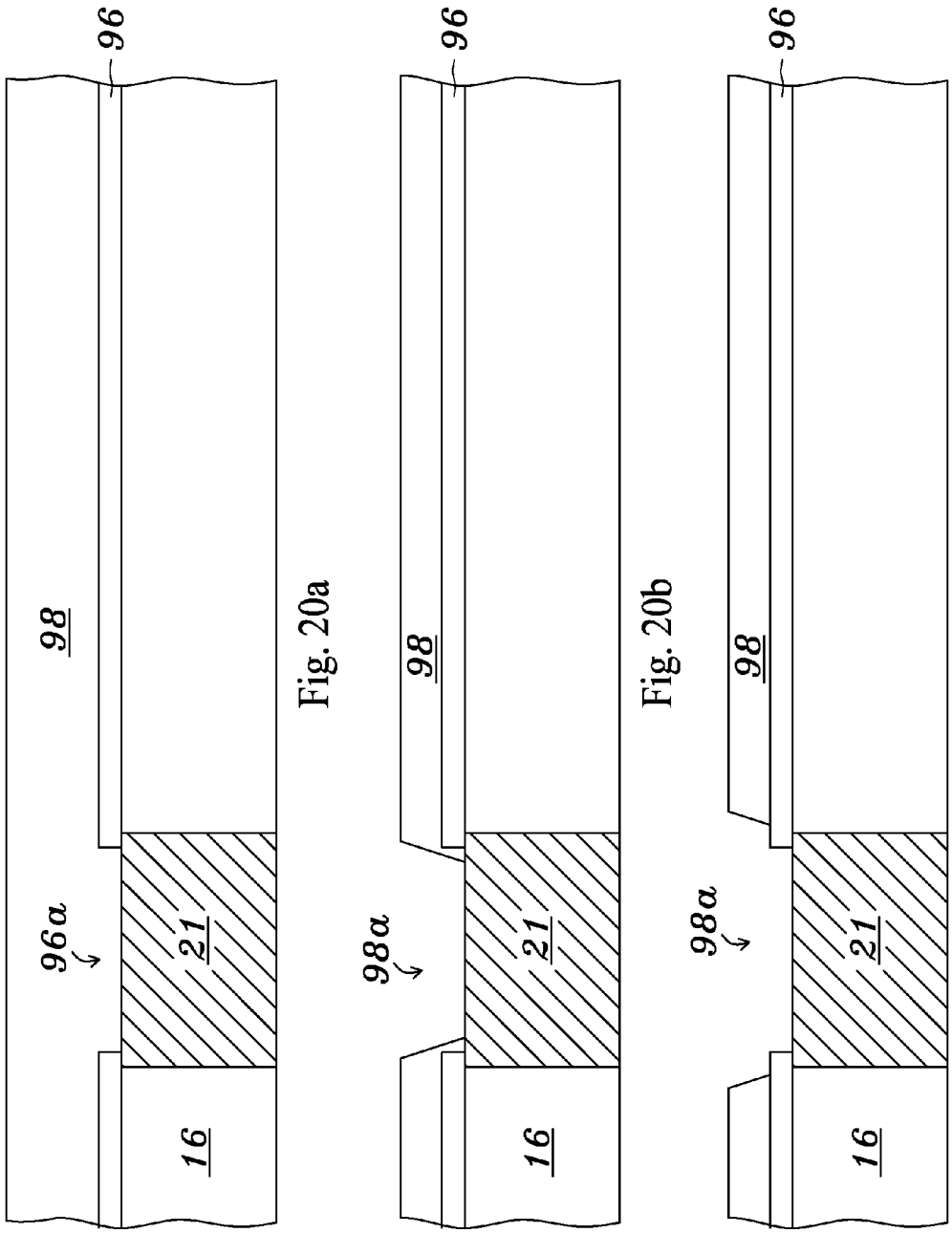

MYW Semitech Exhibit 2001
TSMC and Apple v. MYW Semitech - IPR2026-00065

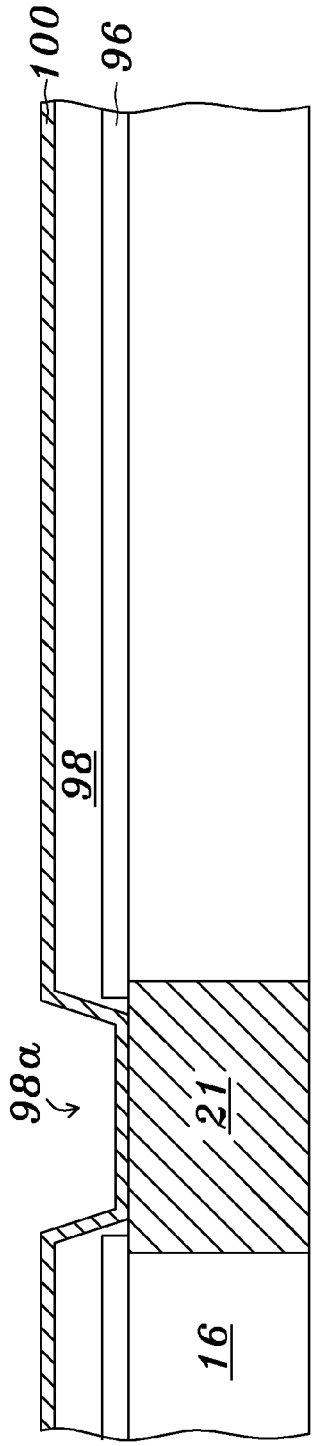

Fig. 20d

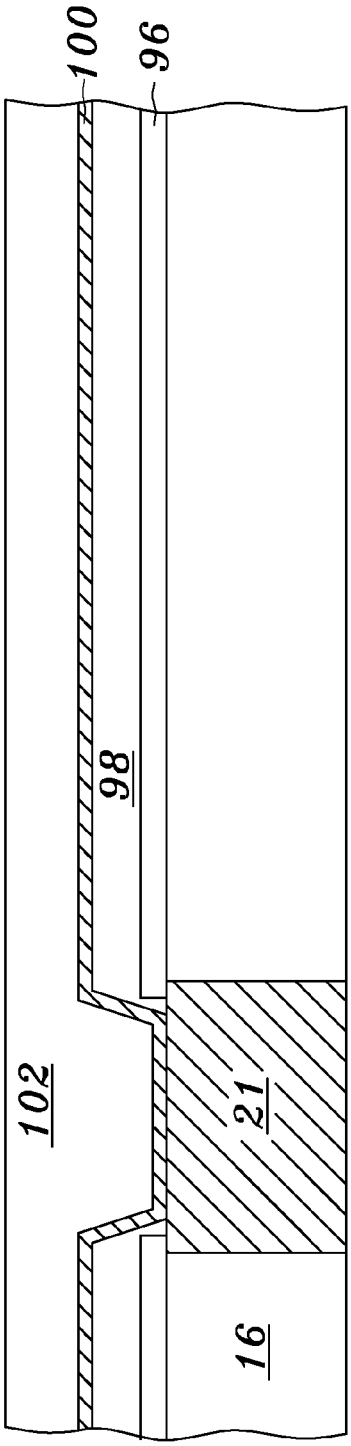

Fig. 20e

MYW Semitech Exhibit 2001
TSMC and Apple v. MYW Semitech - IPR2026-00065

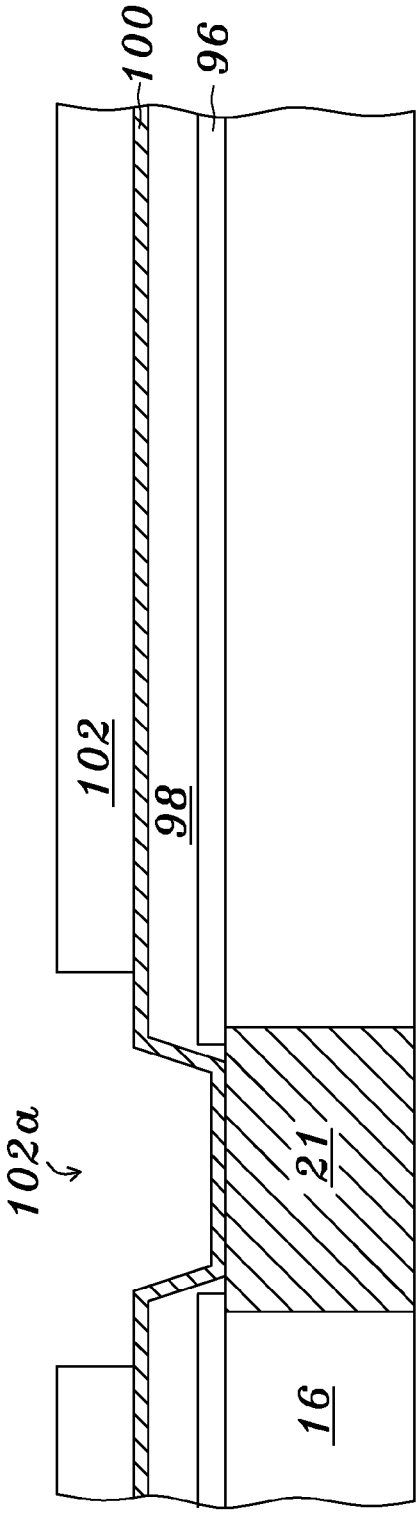

Fig. 20f

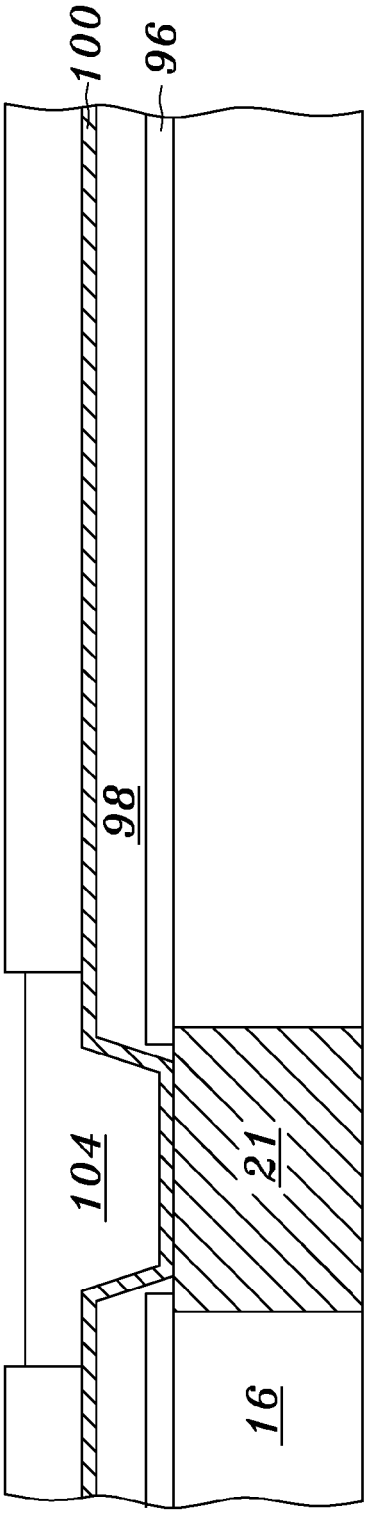

Fig. 20g

MYW Semitech Exhibit 2001
TSMC and Apple v. MYW Semitech - IPR2026-00065

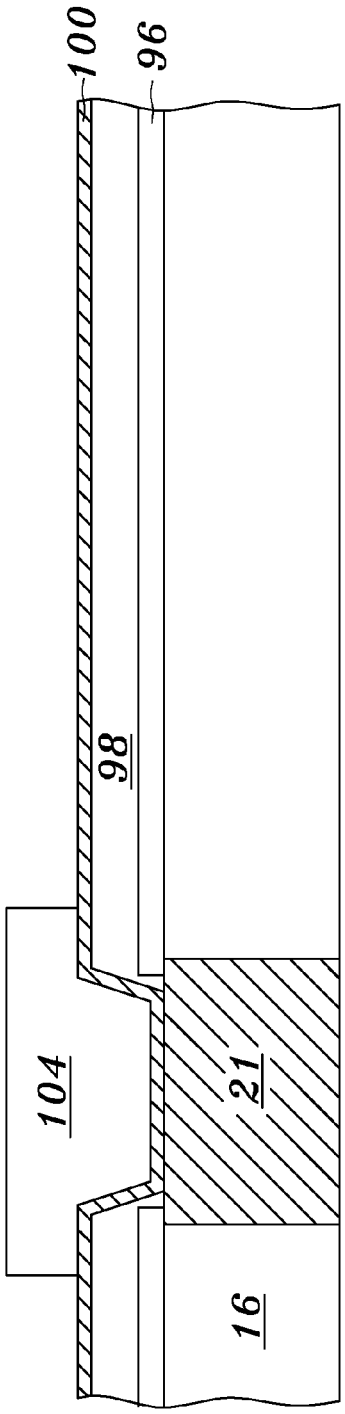

Fig. 20h

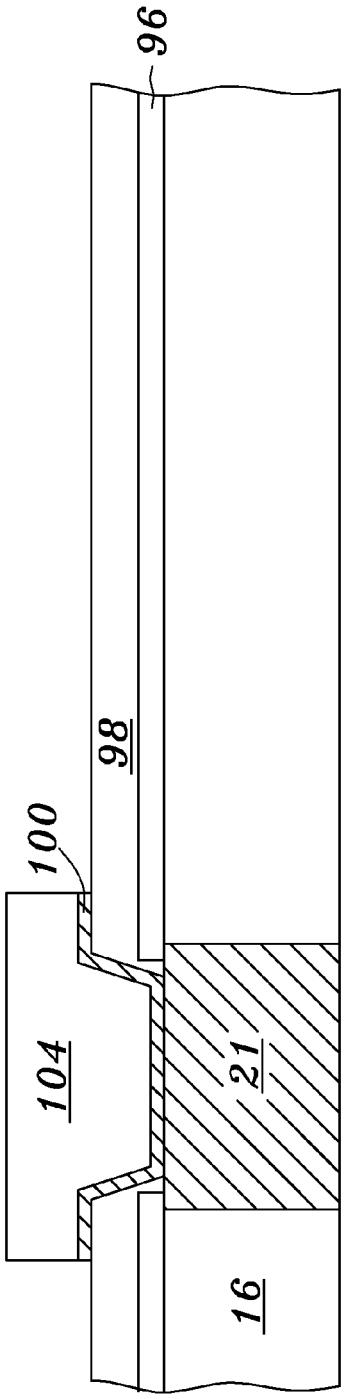

Fig. 20i

MYW Semitech Exhibit 2001
TSMC and Apple v. MYW Semitech - IPR2026-00065

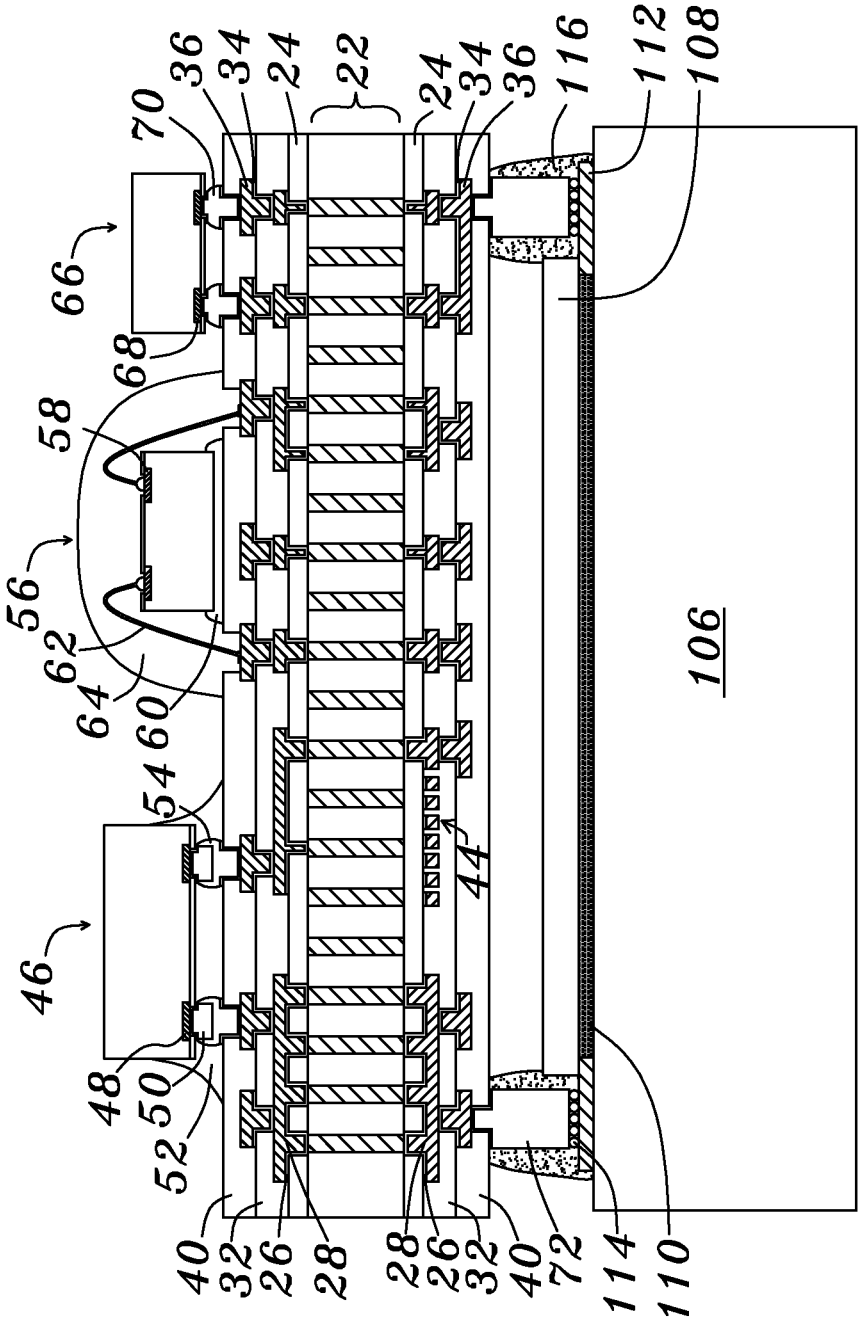

Fig. 21

MYW Semitech Exhibit 2001
TSMC and Apple v. MYW Semitech - IPR2026-00065

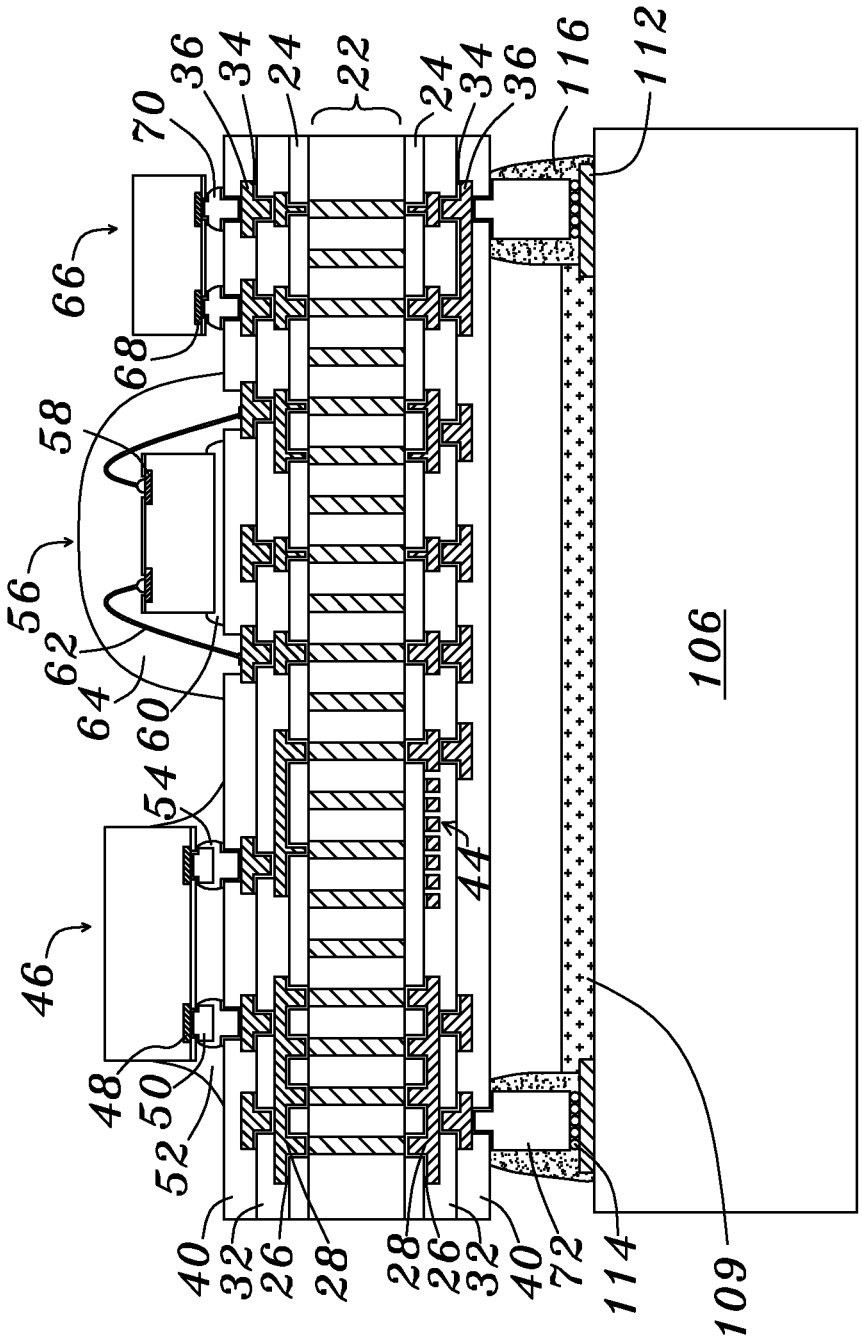

Fig. 22

MYW Semitech Exhibit 2001
TSMC and Apple v. MYW Semitech - IPR2026-00065

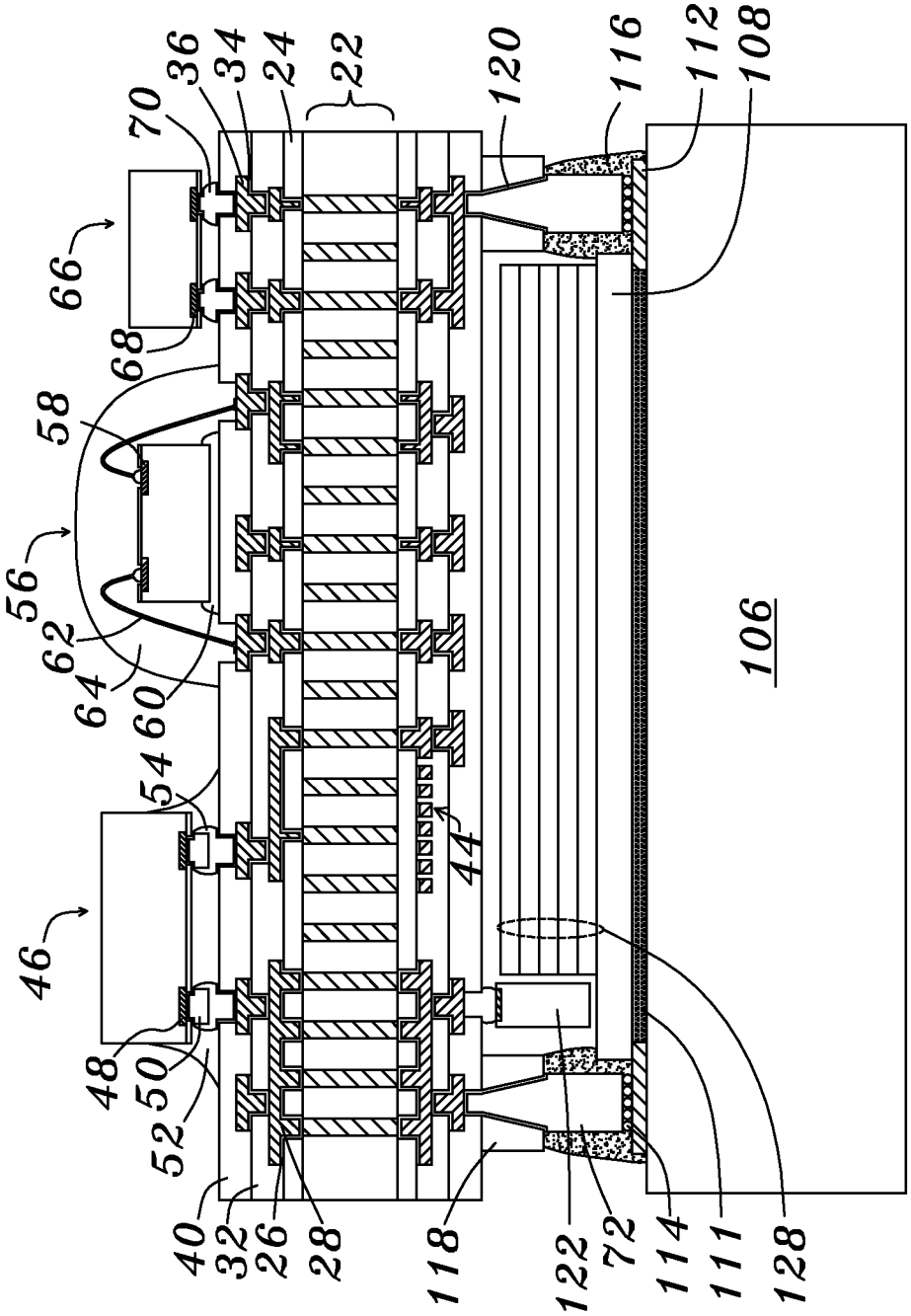

Fig. 23

MYW Semitech Exhibit 2001
TSMC and Apple v. MYW Semitech - IPR2026-00065

METHOD FOR FABRICATING GLASS SUBSTRATE PACKAGE

CROSS-REFERENCE TO RELATED APPLICATIONS

This application claims the benefit of priority from U.S. Provisional Patent Application Ser. No. 61/705,649, entitled "METHOD FOR FABRICATING GLASS SUBSTRATE PACKAGE," filed on Sep. 26, 2012, which is herein incorporated by reference in its entirety.

BACKGROUND OF THE DISCLOSURE

Field of the Disclosure

The patent disclosure a method and structure to manufacture a glass substrate, and disclosed embodiments relate to one or more chip building a system on the glass substrate.

Brief Description of the Related Art

As is well known, microelectronic devices have a tendency to be minimized and thinned with its functional development and a semiconductor package mounted on a mother board is also following the tendency in order to realize a mounting of high integration.

When the geometric dimensions of the Integrated Circuits are scaled down, the cost per die is decreased while some aspects of performance are improved. The metal connections which connect the Integrated Circuit to other circuit or system components become of relative more importance and have, with the further miniaturization of the IC, an increasingly negative impact on the circuit performance. The parasitic capacitance and resistance of the metal interconnections increase, which degrades the chip performance significantly. Of most concern in this respect is the voltage drop along the power and ground buses and the RC delay of the critical signal paths. Attempts to reduce the resistance by using wider metal lines result in higher capacitance of these wires.

To solve this problem, the approach has been taken to develop low resistance metal (such as copper) for the wires while low dielectric materials are used in between signal lines.

Increased Input-Output (IO) combined with increased demands for high performance IC's has led to the development of Flip Chip Packages. Flip-chip technology fabricates bumps (typically Pb/Sn solders) on Al pads on chip and interconnect the bumps directly to the package media, which are usually ceramic or plastic based. The flip-chip is bonded face down to the package medium through the shortest path. These technologies can be applied not only to single-chip packaging, but also to higher or integrated levels of packaging in which the packages are larger and to more sophisticated substrates that accommodate several chips to form larger functional units.

The flip-chip technique, using an area array, has the advantage of achieving the highest density of interconnection to the device and a very low inductance interconnection to the package. However, pre-testability, post-bonding visual inspection, and TCE (Temperature Coefficient of Expansion) matching to avoid solder bump fatigue are still challenges.

Glass can be used as an interposer to bridge between one or more IC chips and a printed circuit board. In many respects, when used as an interposer/substrate and without the requirement for active devices, glass can be a good substitute for a silicon interposer. The advantages of glass in comparison to silicon as an interposer lie in its much lower material cost. Glass also has a CTE closely matched to silicon, so that reliability of interconnects, especially microbonds, can be expected to be quite good. Glass has some disadvantages in comparison to silicon—notably its lower thermal conductivity and the difficulty in forming Through Glass Vias (TGV's). Both of these topics are discussed elsewhere in this patent.

SUMMARY OF THE DISCLOSURE

Embodiments of the present disclosure provide a substrate comprising a solid glass core having a first surface and a second surface opposed to the first surface; multiple conductors extending through the solid glass core beginning at the first surface and ending at the second surface, wherein one of the conductors has a third surface and a fourth surface, wherein the third surface and the first surface are substantially coplanar, wherein the second surface and the fourth surface are substantially coplanar, wherein one of the conductors comprise a copper-tungsten alloy material, wherein the solid glass core is directly contact with the conductor; and a first dielectric layer and a first metal layer formed at the first surface, wherein the first metal layer at the first surface is electrically coupled with one of the conductors.

Embodiments of the present disclosure provide a substrate comprising a solid glass core having a first surface and a second surface opposed to the first surface; multiple conductors extending through the solid glass core beginning at the first surface and ending at the second surface, wherein one of the conductors has a third surface and a fourth surface, wherein the third surface and the first surface are substantially coplanar, wherein the second surface and the fourth surface are substantially coplanar, wherein one of the conductors comprise a first metal layer and a second metal layer coated the first metal layer, wherein the solid glass core is directly contact with the conductor; and a first dielectric layer and a third metal layer formed at the first surface, wherein the first third layer at the first surface is electrically coupled with one of the conductors.

These, as well as other components, steps, features, benefits, and advantages of the present disclosure, will now become clear from a review of the following detailed description of illustrative embodiments, the accompanying drawings, and the claims.

BRIEF DESCRIPTION OF THE DRAWINGS

The drawings disclose illustrative embodiments. They do not set forth all embodiments. Other embodiments may be used in addition or instead. Details that may be apparent or unnecessary may be omitted to save space or for more effective illustration. Conversely, some embodiments may be practiced without all of the details that are disclosed. When the same numeral appears in different drawings, it refers to the same or like components or steps.

Aspects of the disclosure may be more fully understood from the following description when read together with the accompanying drawings, which are to be regarded as illustrative in nature, and not as limiting. The drawings are not necessarily to scale, emphasis instead being placed on the principles of the disclosure.

FIG. **1** illustrates a three-dimensional view of a X-axis nets and a Y-axis nets, in accordance with the present disclosure.

FIG. **2** illustrates a cross-section view of the X-axis nets and the Y-axis nets, in accordance with the present disclosure.

FIG. **3** illustrates a cross-section view of the Z-axis traces crossed to the X-axis nets and the Y-axis nets, in accordance with the present disclosure.

FIG. **4** illustrates a three-dimensional view of the Z-axis traces, X-axis nets and the Y-axis nets, in accordance with the present disclosure.

FIG. **5***a*-**5***i* illustrate the shape and structure of the Z-axis traces, in accordance with the present disclosure.

FIGS. **6**-**15** are illustrate a process of forming a glass substrate, in accordance with the present disclosure.

FIGS. **16***a*-**16***d* illustrate a top views of the glass substrate, in accordance with the present disclosure.

FIGS. **17***a*-**17***d* illustrate cross-section views of the glass substrate and the metal plug, in accordance with the present disclosure.

FIGS. **18***a*-**18***t* illustrate a process to form multiple traces on a top surface and a bottom surface of the glass substrate, in accordance with the present disclosure.

FIGS. **18***u*-**18***v* illustrate cross-section views of multiple chips formed on the glass substrate, in accordance with the present disclosure.

FIG. **18***w* illustrates a cross-section view of the metal bump, in accordance with the present disclosure.

FIG. **18***x* illustrates a cross-section view of multiple chips formed on a top surface and bottom surface of the glass substrate, in accordance with the present disclosure.

FIG. **18***y* illustrates a cross-section view of multiple chips and a 3D-IC package formed on a top surface and bottom surface of the glass substrate, in accordance with the present disclosure.

FIG. **18***z* illustrates a top views of the multiple chips on the glass substrate, in accordance with the present disclosure.

FIGS. **19***a*-**19***j* illustrates a damascene process to form the metal layer on the glass substrate, in accordance with the present disclosure.

FIGS. **20***a*-**20***i* illustrates an embossing process to form the metal layer on the glass substrate, in accordance with the present disclosure.

FIG. **21** illustrates a cross-section view of the glass substrate formed on an OLED display substrate, in accordance with the present disclosure.

FIG. **22** illustrates a cross-section view of the glass substrate formed on a MEMs display substrate, in accordance with the present disclosure.

FIG. **23** illustrates a cross-section view of the glass substrate formed on a LCD display substrate, in accordance with the present disclosure.

While certain embodiments are depicted in the drawings, one skilled in the art will appreciate that the embodiments depicted are illustrative and that variations of those shown, as well as other embodiments described herein, may be envisioned and practiced within the scope of the present disclosure.

DETAILED DESCRIPTION OF THE DISCLOSURE

FIG. **1** illustrates a three-dimensional view of a net **2**, **4**, wherein the net **4** is under the net **2**, wherein the net **2** comprises multiple Y-axis traces **2***a* and multiple X-axis traces **2***b* under the Y-axis traces **2***a*, and wherein the net **4** comprises multiple Y-axis traces **4***a* and multiple X-axis traces **4***b* under the Y-axis traces **4***a*. Multiple gaps **3**, **5** form in the net **2** and **4**. Each of the traces **2***a*, **2***b*, **4***a* and **4***b* is easily move to change the size of gaps **3** and gaps **5**. The diameter (or width) of traces **2***a*, **2***b*, **4***a* and **4***b* are the same, such as between 10 and 30 micrometers, between 20 and 100 micrometers, between 40 and 150 micrometers, between 50 and 200 micrometers, between 200 and 1000 micrometers or between 500 and 10000 micrometers. The traces **2***a*, **2***b*, **4***a* and **4***b* may be metal traces or polymer traces, such as copper traces, copper-gold alloy traces, copper-gold-palladium alloy traces, copper-gold-silver alloy traces, copper-platinum alloy traces, copper-iron alloy traces, copper-nickel alloy traces, copper-tungsten traces, tungsten traces, brass wires, zinc plated brass wires, stainless wires, nickel plated stainless wires, phosphor bronze wires, copper plated the aluminum wires, aluminum traces, phenolic resin traces, epoxy resin traces, melamine-formaldehyde resin traces or polysiloxanes resin traces. The cross-section shape of traces **2***a*, **2***b*, **4***a* and **4***b* may be a circular shape, a Square shape, an oblong shape, a rectangle shape or a flat shape.

FIG. **2** illustrates a cross-section view of the net **2** and the net **4**. The gaps **3** and gaps **5** are aligned with each other.

Next, referring to FIG. **3**, multiple metal traces **6** are crossed the net **2** and the net **4** through the gaps **3** and gaps **5**. The diameter (or width) of metal traces **6** is between 10 and 30 micrometers, between 20 and 100 micrometers, between 40 and 150 micrometers, between 50 and 200 micrometers, between 200 and 1000 micrometers or between 500 and 10000 micrometers. The traces **6** may be metal traces, such as copper traces, copper-gold alloy traces, copper-gold-palladium alloy traces, copper-gold-silver alloy traces, copper-platinum alloy traces, copper-iron alloy traces, copper-nickel alloy traces, copper-tungsten traces, tungsten traces, brass wires, zinc plated brass wires, stainless wires, nickel plated stainless wires, phosphor bronze wires, copper plated the aluminum wires, aluminum traces, titanium-containing layer plated the copper wires, tantalum-containing layer plated the copper wires. The cross-section shape of traces **6** may be a circular shape, a square shape, an oblong shape, a rectangle shape or a flat shape. The diameter (or width) of traces **6** may be the same with the traces **2***a*, **2***b*, **4***a* and **4***b* or different with the traces **2***a*, **2***b*, **4***a* and **4***b*.

Furthermore, we proposed the material of the traces **6** is copper-tungsten alloy, wherein the copper in the copper-tungsten alloy is 50 percent and the tungsten in the copper-tungsten alloy is 50 percent, the copper in the copper-tungsten alloy is 60 percent and the tungsten in the copper-tungsten alloy is 40 percent, the copper in the copper-tungsten alloy is 70 percent and the tungsten in the copper-tungsten alloy is 30 percent, the copper in the copper-tungsten alloy is 80 percent and the tungsten in the copper-tungsten alloy is 20 percent, the copper in the copper-tungsten alloy is 90 percent and the tungsten in the copper-tungsten alloy is 10 percent, the copper in the copper-tungsten alloy is 40 percent and the tungsten in the copper-tungsten alloy is 60 percent, the copper in the copper-tungsten alloy is 30 percent and the tungsten in the copper-tungsten alloy is 70 percent.

FIG. **4** illustrates a three-dimensional view of a net **2**, **4** and traces **6**.

FIG. **5***a*-**5***i* illustrates the shape and structure of the traces **6**. In FIG. **5***a*, the cross-section shape of traces **6** is a circular shape. In FIG. **5***d*, the cross-section shape of traces **6** is a square shape. In FIG. **5***g*, the cross-section shape of traces **6** is an oblong shape. In FIG. **5***b*, the cross-section shape of traces **6** is a circular shape and a first covering layer **6***a* is cover on the traces **6**, wherein the first covering layer **6***a* may be a metal layer, such as a nickel-containing layer, a zinc-containing layer, a titanium-containing layer, a tantalum-containing layer, a silver-containing layer, a chromium-containing layer and wherein the first covering layer **6***a* may

be an anti-oxidation layer, such as an oxide-containing layer. In FIG. **5***e*, the cross-section shape of traces **6** is a square shape and a first covering layer **6***a* is cover on the traces **6**, wherein the first covering layer **6***a* may be a metal layer, such as a nickel-containing layer, a zinc-containing layer, a titanium-containing layer, a tantalum-containing layer, a silver-containing layer, a chromium-containing layer and wherein the first covering layer **6***a* may be an anti-oxidation layer, such as an oxide-containing layer. In FIG. **5***h*, the cross-section shape of traces **6** is an oblong shape and a first covering layer **6***a* is cover on the traces **6**, wherein the first covering layer **6***a* may be a metal layer, such as a nickel-containing layer, a zinc-containing layer, a titanium-containing layer, a tantalum-containing layer, a silver-containing layer, a chromium-containing layer and wherein the first covering layer **6***a* may be an anti-oxidation layer, such as an oxide-containing layer. In FIG. **5***c*, the cross-section shape of traces **6** is a circular shape and a second covering layer **6***b* is cover on the first covering layer **6***a*, wherein the second covering layer **6***b* may be an adhesion layer, such as a nickel-containing layer, a zinc-containing layer, a titanium-containing layer, a tantalum-containing layer, a silver-containing layer, a chromium-containing layer and wherein the first covering layer **6***a* may be an anti-oxidation layer, such as an oxide-containing layer. In FIG. **5***f*, the cross-section shape of traces **6** is a square shape and a second covering layer **6***b* is cover on the first covering layer **6***a*, wherein the second covering layer **6***b* may be an adhesion layer, such as a nickel-containing layer, a zinc-containing layer, a titanium-containing layer, a tantalum-containing layer, a silver-containing layer, a chromium-containing layer and wherein the first covering layer **6***a* may be an anti-oxidation layer, such as an oxide-containing layer. In FIG. **5***i*, the cross-section shape of traces **6** is an oblong shape and a second covering layer **6***b* is cover on the first covering layer **6***a*, wherein the second covering layer **6***b* may be an adhesion layer, such as a nickel-containing layer, a zinc-containing layer, a titanium-containing layer, a tantalum-containing layer, a silver-containing layer, a chromium-containing layer and wherein the first covering layer **6***a* may be an anti-oxidation layer, such as an oxide-containing layer.

Next, referring to FIG. **6**, the traces **6** are stretched to a suitable length L1, e.g., smaller than 5 meters, such as between 0.5 and 1 meter, or between 1 and 3 meters. In the same time, the net **4** is moved down to a suitable location. The pitch t1 between the traces **2***a*, **2***b*, **4***a*, **4***b* is greater than the diameter (or width) of traces **6**.

Next, referring to FIG. **7**, the traces **2***a*, **2***b*, **4***a* and **4***b* are moved to change the pitch t1 to a pitch t2, then the traces **6** are closed up to a pitch t3. The pitch t3 substantially the same with the diameter (or width) of the traces **2***a*, **2***b*, **4***a* and **4***b*, such as between 5 and 20 micrometers, between 20 and 50 micrometers, between 30 and 80 micrometers, between 20 and 100 micrometers, between 40 and 150 micrometers, between 50 and 200 micrometers, between 200 and 1000 micrometers or between 500 and 10000 micrometers. In the same time, may be apply a force to stretch the traces **6**, **2***a*, **2***b*, **4***a* and **4***b* and make the traces **6** keep strength and keep the pitch t3 fixed.

Next, referring to FIG. **8**, a thermal resistance layer **8** is formed on surfaces of the net **4**. The thermal resistance layer **8** may be a polymer layer, such as a thermosetting resin, phenolic resin, epoxy resin, melamine-formaldehyde resin, polysiloxanes resin, plaster layer, wherein the thermal resistance layer **8** has a heat deflection temperature between 400 and 900° C. When a liquid thermal resistance layer **8** formed on the net **4** and the thermal resistance layer **8** permeated the net **4** through the gaps **5**, wherein the thermal resistance layer **8** cover the gaps **5** between traces **4***a*, traces **4***b* and traces **6**, then curing the thermal resistance layer **8**. The thermal resistance layer **8** has a thickness between 0.05 and 1 meter.

Next, referring to FIG. **9**, a mold **10** is provided between the net **2** and the net **4**, wherein the mold **10** surrounds the traces **6** and on the thermal resistance layer **8**. The mold **10** is hold up by a machine or a device. The mold **10** may be a metal mold, a ceramics mold or a polymer mold, which has a heat deflection temperature between 400° C. and 900° C. or between 800° C. and 1300° C.

Next, referring to FIG. **10**, a fixed layer **12** is formed on the thermal resistance layer **8**, wherein the fixed layer **12** may be a glass layer or a polymer layer. When the material of the fixed layer **12** is glass, the fixed layer **12** is a high temperature liquid to form on the thermal resistance layer **8**, and then the fixed layer **12** down to a suitable temperature becomes a solid state. The fixed layer **12** has a thickness between 0.01 and 1 meter. The bottom of traces **6** are fixed by the fixed layer **12**.

Next, referring to FIG. **11**, the traces **6** under the net **4** are cut. A tank **14** carries the mold **10**, net **4** and the fixed layer **12**.

Next, referring to FIG. **12**, a glass layer (liquid form) **16** is formed on the fixed layer **12**. The glass layer **16** is a high temperature liquid to form on the fixed layer **12** and fill in the mold **10**, and then the glass layer **16** down to a suitable temperature becomes a solid state, wherein the glass layer **16** has a glass transition temperature between 300° C. and 900° C., between 500° C. and 800° C., between 900° C. and 1200° C. or between 1000° C. and 1800° C. The glass layer **16** is a low melting point glass material, wherein the glass layer **16** has a melting point between 300° C. and 900° C., 800° C. and 1300° C., between 900° C. and 1600° C., between 1000° C. and 1850° C., or between 1000° C. and 2000° C., wherein the melting point may smaller than 1500° C. The glass layer **16** has a thickness greater than 0.5 meters or greater than 0.1 meter. Furthermore, there is a few bubbles or no bubble in glass layer **16**, for example, there is zero to 3 bubbles in one cubic meter of the glass layer **16**, 1 to 10 bubbles in one cubic meter of the glass layer **16**, 5 to 30 bubbles in one cubic meter of the glass layer **16** or 20 to 60 bubbles in one cubic meter of the glass layer **16**, wherein the bubble has a diameter between 0.0001 and 0.001 centimeters, between 0.001 and 0.05 centimeters, between 0.05 and 0.1 centimeters or between 0.05 and 0.5 centimeters. The glass layer **16** may be remove bubbles through multiple laminating process, squeezing process and heating process.

The glass layer **16** refers to an amorphous solid. The material of the glass layer **16** may be included soda-lime glass, boro-silicate glass, alumo-silicate glass, fluoride glasses, phosphate glasses or chalcogen glasses. For example, the composition of the soda-lime glass comprises SiO_2 (74%), Na_2O (13%), CaO (10.5%), Al_2O_3 (1.3%), K_2O (0.3%), SO3 (0.2%), MgO (0.2%), Fe2O3 (0.04%), TiO2 (0.01%), the composition of the boro-silicate glass comprises SiO_2 (81%), B_2O_3 (12%), Na_2O (4.5%), Al_2O_3 (2.0%), the composition of the phosphate glasses comprises a percentage of the P_2O_5 material between 3% and 10% or between 5% and 20%.

A glass, once formed into a solid body, is capable of being softened and perhaps remitted into a liquid form. The "glass transition temperature" of a glass material is a temperature

below which the physical properties of the glass are similar to those of a solid and above which the glass material behaves like a liquid.

If a glass is sufficiently below the glass transition temperature, molecules of the glass may have little relative mobility. As a glass approaches the glass transition temperature, the glass may begin to soften and with increasing temperature the glass will ultimately melt into the liquid state. Thus, a glass body may be softened to an extent sufficient to enable manipulation of the body's shape, allowing for the formation of holes or other features in the glass body. Once the desired form is obtained, glass is usually annealed for the removal of stresses. Surface treatments, coatings or lamination may follow to improve the chemical durability (glass container coatings, glass container internal treatment), strength (toughened glass, bulletproof glass, windshields), or optical properties (insulated glazing, anti-reflective coating).

Furthermore, the glass layer **16** may be replaced by a polymer layer. When the polymer cured to a solid state. The polymer layer has an expansion coefficient between 3 and 10 ppm/° C.

Next, referring to FIG. **13**, the mold **10** and the tank **14** are removed and cut the traces **6** from net **2**.

Next, referring to FIG. **14**, the net **4** and the thermal resistance layer **8** are removed, and then a column **8** is produced.

Next, referring to FIG. **15**, the traces **6** out of the column **8** are removed and cutting the column **8** to produce multiple first substrates **20**, wherein the first substrate **20** has a thickness between 20 and 100 micrometers, between 50 and 150 micrometers, between 100 and 300 micrometers or between 150 and 2000 micrometers or greater than 1000 micrometers. The first substrates **20** may be make a planarization process using a suitable process, such as a chemical mechanical polishing (CMP) procedure, mechanical grinding, or laser drilling

Next, referring to FIG. **16***a*, the first substrate **20** comprises multiple second substrates **22**. The second substrates **22** are well-regulated an array in the first substrate **20**. Each of the second substrates has multiple metal plugs **21**, wherein the metal plug **21** is formed from metal traces **6**. The metal plug **21** has the same material and structure with metal trace **6**.

Next, referring to FIG. **16***b*-**16***d*, the metal plugs **21** may be arranged different types, such as FIG. **16***b*, the metal plugs **21** are arranged on the side portions of the second substrate **22**, or such as FIG. **16***c*, the metal plugs **21** are arranged on the side portions and center portion of the second substrate **22**, or such as FIG. **16***d*, some portions of the second substrate **22** are not arranged the metal plugs **21**.

FIG. **17***a* illustrates a cross-section view of the second substrate **22** and FIG. **17***b*-FIG. **17***d* illustrates a cross-section view of the metal plug **21**. The second substrate **22** comprise an amorphous solid glass layer/body **16** and multiple metal plugs **21**, wherein the amorphous solid glass layer/body **16** having a top surface and an opposing bottom surface and the metal plugs **21** extending through the amorphous solid glass layer/body **16** beginning at the top surface and ending at the bottom surface. The top surface of the metal plugs **21** are the same as the bottom surface of the metal plugs **21**.

Please referring FIG. **17***b*, the top surface of the metal plugs **21** and the top surface of the amorphous solid glass layer/body **16** are substantially coplanar. The bottom surface of the metal plugs **21** and the bottom surface of the amorphous solid glass layer/body **16** are substantially coplanar.

Please referring FIG. **17***c*, the top surface of the metal plugs **21** comprises a top surface of the metal traces **6** and a top surface of the first covering layer **6***a* are substantially coplanar with the top surface of the amorphous solid glass layer/body **16**. The bottom surface of the metal plugs **21** comprises a bottom surface of the metal traces **6** and a bottom surface of the first covering layer **6***a* are substantially coplanar with the bottom surface of the amorphous solid glass layer/body **16**.

Please referring FIG. **17***d*, the top surface of the metal plugs **21** comprises a top surface of the metal traces **6**, a top surface of the first covering layer **6***a* and a top surface of the second covering layer **6***b* are substantially coplanar with the top surface of the amorphous solid glass layer/body **16**. The bottom surface of the metal plugs **21** comprises a bottom surface of the metal traces **6**, a bottom surface of the first covering layer **6***a* and a bottom surface of the second covering layer **6***b* are substantially coplanar with the bottom surface of the amorphous solid glass layer/body **16**.

FIG. **18***a*-FIG. **18***t* illustrates a process to form multiple traces on a top surface and a bottom surface of the first substrate **20**.

Next, referring to FIG. **18***a*, a dielectric layer **24** is formed on the top surface of the first substrate **20**, wherein the dielectric layer **24** may include or may be a layer of silicon oxide (such as SiO_2), silicon nitride (such as Si_3N_4), silicon oxynitride (such as SiON), silicon oxycarbide (such as SiOC), phosphosilicate glass (PSG), silicon carbon nitride (such as SiCN), low k dielectric layer (K between 0.5 and 3), or polymer (such as polyimide, benzocyclobutene (BCB), polybenzoxazole (PBO), poly-phenylene oxide (PPO), epoxy, or silosane). The dielectric layer **24** may be formed or deposited using a suitable process. The dielectric layer **24** has a thickness between 0.3 and 5 micrometers, between 2 and 10 micrometers, between 1 and 30 micrometers or greater than 30 micrometers.

Next, referring to FIG. **18***b*, multiple openings **24***a* are formed in the dielectric layer **24** to expose the metal plugs **21**. The openings **24***a* may be formed in the dielectric layer **24** by a suitable process, such as etching. The opening **24***a* has a width between 0.3 and 3 micrometers, between 0.5 and 8 micrometers, between 2 and 20 micrometers or between 2 and 50 micrometers.

Next, referring to FIG. **18***c*, a first metal layer **26** is formed on the dielectric layer **24**, on the metal plugs **21** and in the openings **24***a*. The first metal layer **26** may include an adhesion/barrier layer, such as a layer of titanium, a titanium-tungsten alloy, titanium nitride, chromium, tantalum, tantalum nitride, nickel or nickel vanadium formed using a suitable process, such as vacuum deposition, Physical Vapor Deposition (PVD), Plasma Enhanced Chemical Vapor Deposition (PECVD), sputtering process or an electroplating process, with a thickness, e.g., between 1 nanometer and 2 micrometers, between 0.3 and 3 micrometers or between 0.5 and 10 micrometers.

Next, referring to FIG. **18***d*, a second metal layer **28** is formed on the first metal layer **26**. The second metal layer **28** may be comprises copper, nickel, gold or aluminum formed using a suitable process, such as vacuum deposition, Physical Vapor Deposition (PVD), Plasma Enhanced Chemical Vapor Deposition (PECVD), sputtering process or an electroplating process, with a thickness, e.g., between 1 nanometer and 5 micrometers, between 1 and 5 micrometers or between 5 and 30 micrometers.

Next, referring to FIG. **18***e*, a photoresist layer **30** is formed on the second metal layer **28** by using a suitable process, such as spin coating process or lamination process.

Next, a photo exposure process using a 1× stepper and a development process using a chemical solution can be employed to form multiple openings **30***a*, exposing the second metal layer **28**, in the photoresist layer. The photoresist layer **30** may have a thickness, e.g., between 3 and 50 micrometers, wherein the photoresist layer **30** may be a positive-type photo-sensitive resist layer or negative-type photo-sensitive resist layer.

Next, referring to FIG. **18***f*, remove the first metal layer **26** and the second metal layer **28** are under the openings **30***a* by using a suitable process, such as an etching process.

Next, referring to FIG. **18***g*, remove the photoresist layer **30** by using a clean process.

Next, referring to FIG. **18***h*, a dielectric layer **32** is formed on the first dielectric layer **24** and on the second metal layer **28**, wherein the dielectric layer **32** may include or may be a layer of silicon oxide (such as SiO_2), silicon nitride (such as Si_3N_4), silicon oxynitride (such as SiON), silicon oxycarbide (such as SiOC), phosphosilicate glass (PSG), silicon carbon nitride (such as SiCN), low k dielectric layer (K between 0.5 and 3), or polymer (such as polyimide, benzocyclobutene (BCB), polybenzoxazole (PBO), poly-phenylene oxide (PPO), epoxy, or silosane). The dielectric layer **32** may be formed or deposited using a suitable process. The dielectric layer **32** has a thickness between 0.3 and 5 micrometers, between 2 and 10 micrometers, between 1 and 30 micrometers or greater than 30 micrometers.

Next, referring to FIG. **18***i*, multiple openings **32***a* are formed in the dielectric layer **32** to expose the second metal layer **28**. The openings **32***a* may be formed in the dielectric layer **32** by a suitable process, such as etching. The opening **32***a* has a width between 0.3 and 3 micrometers, between 0.5 and 8 micrometers, between 2 and 20 micrometers or between 2 and 50 micrometers.

Next, referring to FIG. **18***j*, a third metal layer **34** is formed on the dielectric layer **32**, on the second metal layer **28** and in the openings **32***a*. The third metal layer **34** may include an adhesion/barrier layer, such as a layer of titanium, a titanium-tungsten alloy, titanium nitride, chromium, tantalum, tantalum nitride, nickel or nickel vanadium formed using a suitable process, such as vacuum deposition, Physical Vapor Deposition (PVD), Plasma Enhanced Chemical Vapor Deposition (PECVD), sputtering process or an electroplating process, with a thickness, e.g., between 1 nanometer and 2 micrometers, between 0.3 and 3 micrometers or between 0.5 and 10 micrometers.

Next, referring to FIG. **18***k*, a fourth metal layer **36** is formed on the third metal layer **34**. The fourth metal layer **36** may be comprises copper, nickel, gold or aluminum formed using a suitable process, such as vacuum deposition, Physical Vapor Deposition (PVD), Plasma Enhanced Chemical Vapor Deposition (PECVD), sputtering process or an electroplating process, with a thickness, e.g., between 1 nanometer and 5 micrometers, between 1 and 5 micrometers or between 5 and 30 micrometers.

Next, referring to FIG. **18***l*, a photoresist layer **38** is formed on the fourth metal layer **36** by using a suitable process, such as spin coating process or lamination process. Next, a photo exposure process using a 1× stepper and a development process using a chemical solution can be employed to form multiple openings **38***a*, exposing the fourth metal layer **36**, in the photoresist layer. The photoresist layer **38** may have a thickness, e.g., between 3 and 50 micrometers, wherein the photoresist layer **38** may be a positive-type photo-sensitive resist layer or negative-type photo-sensitive resist layer.

Next, referring to FIG. **18***m*, remove the third metal layer **34** and the fourth metal layer **36** are under the openings **38***a* by using a suitable process, such as an etching process.

Next, referring to FIG. **18***n*, remove the photoresist layer **38** by using a clean process.

Next, referring to FIG. **18***o*, a dielectric layer **40** is formed on the second dielectric layer **32** and on the fourth metal layer **36**, wherein the dielectric layer **40** may include or may be a layer of silicon oxide (such as SiO_2), silicon nitride (such as Si_3N_4), silicon oxynitride (such as SiON), silicon oxycarbide (such as SiOC), phosphosilicate glass (PSG), silicon carbon nitride (such as SiCN), low k dielectric layer (K between 0.5 and 3), or polymer (such as polyimide, benzocyclobutene (BCB), polybenzoxazole (PBO), poly-phenylene oxide (PPO), epoxy, or silosane). The dielectric layer **40** may be formed or deposited using a suitable process. The dielectric layer **40** has a thickness between 0.3 and 5 micrometers, between 2 and 10 micrometers, between 1 and 30 micrometers or greater than 30 micrometers.

Next, referring to FIG. **18***p*, multiple openings **40***a* are formed in the dielectric layer **40** to expose the fourth metal layer **36**. The openings **40***a* may be formed in the dielectric layer **40** by a suitable process, such as etching. The opening **40***a* has a width between 0.3 and 3 micrometers, between 0.5 and 8 micrometers, between 2 and 20 micrometers or between 2 and 50 micrometers.

Next, referring to FIG. **18***q*, a protecting layer **42** is formed in the openings **40***a*, on the dielectric layer **40** and on the fourth metal layer **36**, which can protect the dielectric layer **40** not to be damaged and the fourth metal layer **36** not be damaged and oxidated.

Next, referring to FIG. **18***s*, repeat the processes of FIG. **18***a*-FIG. **18***p* to form the dielectric layer **24**, the first metal layer **26**, the second metal layer **28**, the dielectric layer **32**, the third metal layer **34**, the fourth metal layer **36** and the dielectric layer **40** on the bottom surface of the first substrate **20**.

Furthermore, referring to FIG. **18***t*, a passive device **44** may be formed in the first metal layer **28** and the second metal layer **36**, such as an inductor, a capacitor or a resistor.

Next, referring to FIG. **18***u*, multiple chips **46** and chips **56** set up over the dielectric layer **40** through a flip chip package process or a wirebonding package process, wherein the chip **46** and **56** comprises may be a memory chip, such as NAND-Flash memory chip, Flash memory chip, DRAM chip, SRAM chip or SDRAM chip, a central-processing-unit (CPU) chip, a graphics-processing-unit (GPU) chip, a digital-signal-processing (DSP) chip, a baseband chip, a wireless local area network (WLAN) chip, a logic chip, an analog chip, a global-positioning-system (GPS) chip, a "Bluetooth" chip, or a chip including one or more of a CPU circuit block, a GPU circuit block, a DSP circuit block, a memory circuit block (such as DRAM circuit block, SRAM circuit block, SDRAM circuit block, Flash memory circuit block, or NAND-Flash memory circuit block), a baseband circuit block, a Bluetooth circuit block, a GPS circuit block, a MEMS chip, a COMS image sensor device, a WLAN circuit block, and a modem circuit block, from the semiconductor wafer.

The chips **46** are set up on the dielectric layer **40** through a flip chip package process, wherein the chip **46** comprises multiple metal pads **48** and multiple metal bumps **50** formed on the metal pads **48**. The metal pad **48** may be an electroplated copper pad, a damascene copper pad or an aluminum pad. The metal bump **50** comprises an adhesion/barrier metal layer formed on the metal pad **48**, an electroplated metal layer or an electro-less metal layer formed on the

adhesion/barrier metal layer, wherein the adhesion/barrier metal layer comprises a titanium-containing layer, a chromium-containing layer, a tantalum-containing layer or a nickel layer, and the electroplated metal layer comprises a copper layer, a gold layer, a nickel layer, a tin-containing layer, a solder layer, a solder layer over a nickel layer and a copper layer, and the electro-less layer comprises a copper layer, a gold layer or a nickel layer. The electroplated metal layer has a thickness between 2 and 5 micrometers, between 5 and 30 micrometers or between 10 and 50 micrometers. The metal bumps **50** are connected to the fourth metal layer **36** exposed by the openings **40***a* through a solder layer **54**, wherein the solder layer **54** is formed on the fourth metal layer **36** exposed by the openings **40***a* or is a portion of the metal bump **50**. An underfill layer **52** is formed between the chips **46** and the dielectric layer **40**.

The chips **56** are set up over the dielectric layer **40** through a polymer adhesion layer **60**, wherein the chip **56** comprises multiple metal pads **58**. The metal pad **58** may be an electroplated copper pad, a damascene copper pad or an aluminum pad. Multiple metal wires **62** are connected to the metal pads **58** and the fourth metal layer **36** exposed by the openings **40***a*, wherein the metal wires **62** comprises a gold wire, a copper wire, a metal alloy wire, a silver-containing wire, an aluminum-containing wire or gold-copper alloy wire. An underfill layer **64** is covered the chip **45**, metal wires **62** and the metal pads **58**.

Multiple discrete passive components **66** set up on the dielectric layer **40**, such as a discrete inductor, a discrete capacitor or a discrete resistor, wherein the discrete passive component **66** comprises a multiple metal pad **68**. The discrete passive components **66** mounted on the dielectric layer **40** through a solder layer **70**.

Next, referring to FIG. **18***v*, multiple metal bumps **72** are formed on the bottom surface of the substrate **20**.

FIG. **18***w* is disclosed some structures of metal bump **72**.

Lift side: 1st type of structures of metal bump **72** comprises an adhesion/barrier metal layer **61** formed on the metal pad **48**, a metal seed layer **63** formed on the adhesion/barrier metal layer **61**, an electroplated metal layer **65** formed on the metal seed layer **63** and a solder layer **67** formed on the electroplated metal layer **65**, wherein the adhesion/barrier metal layer **61** comprises a titanium-containing layer, a chromium-containing layer, a tantalum-containing layer or a nickel layer, wherein the electroplated metal layer **65** comprises a copper layer, a gold layer, a nickel layer, wherein the solder layer **67** can be formed by screen plating, ball mounting, or an electroplating process, such as gold-tin alloy, tin-silver alloy, tin-silver-copper alloy, indium, tin-bismuth alloy, or other lead-free alloy. Lead alloy solders can also be used but may be less desirable in some embodiments due to toxicity considerations. The adhesion/barrier metal layer **61** has a thickness between 0.05 and 2 micrometers. The metal seed layer **63** has a thickness between 0.05 and 2 micrometers. The electroplated metal layer **65** has a thickness between 1 and 5 micrometers, between 2 and 8 micrometers or between 5 and 20 micrometers. The solder layer **67** has a thickness between 30 and 80 micrometers, between 50 and 100 micrometers, between 80 and 150 micrometers or between 120 and 350 micrometers.

Right side: 2nd type of structure of metal bump **72** comprises an adhesion/barrier metal layer **61** formed on the metal pad **48**, a metal seed layer **63** formed on the adhesion/barrier metal layer **61**, a first electroplated metal layer **65** formed on the metal seed layer **63** and a second electroplated metal layer **69** formed on the first electroplated metal layer **65**, wherein the adhesion/barrier metal layer **61** comprises a titanium-containing layer, a chromium-containing layer, a tantalum-containing layer or a nickel layer, wherein the first electroplated metal layer **65** comprises a copper layer, a gold layer, a nickel layer, wherein the second electroplated metal layer **69** comprises a copper layer, a gold layer, a nickel layer. The adhesion/barrier metal layer **61** has a thickness between 0.05 and 2 micrometers. The metal seed layer **63** has a thickness between 0.05 and 2 micrometers. The first electroplated metal layer **65** has a thickness between 1 and 5 micrometers, between 2 and 4 micrometers, between 5 and 15 micrometers or between 10 and 25 micrometers. The second electroplated metal layer **69** has a thickness between 1 and 5 micrometers, between 2 and 4 micrometers, between 10 and 30 micrometers or between 20 and 60 micrometers.

Furthermore, referring to FIG. **18***x*, the chips **46** may be set up on the bottom surface of the substrate **20**.

Furthermore, referring to FIG. **18***y*, the chip **46** may be a 3D IC chip, wherein the chip **46** comprises a multiple metal pad **48** formed on the top and bottom surface. The metal pads **48** of the top surface of the chip **46** are connected to the metal pads **48** of the bottom surface of the chip **46** through multiple through-silicon-via metal layers. A chip **47** is connected to the 3D IC chip **46** through the flip chip package process, wherein the chip **47** comprises multiple metal pads **49**, wherein the metal pad **49** may be an electroplated copper pad, a damascene copper pad or an aluminum pad. The metal pads **49** are connected to the metal pads **48** through a solder layer **51**.

FIG. **18***y*, illustrates a top view of the substrate **20**. FIG. **18***v*-FIG. **18***x* illustrate a cross section view of Line L-L' in FIG. **18***z*. Multiple the chips **46**, the chips **56** and the passive components **66** may also be provided in or on the substrate **20**.

Next, cutting the first substrate **20** to produce multiple second substrates **22**.

FIG. **19***a*-FIG. **19***j* illustrates a damascene process to form the first metal layer **26**, the second metal layer **28**, the third metal layer **34** and the fourth metal layer **36** on a top surface and a bottom surface of the first substrate **20**.

Referring to FIG. **19***a*, the dielectric layers **24** in FIG. **18**A include two dielectric layers **80** and **82**. The dielectric layer **80** is formed on the dielectric layer **82** by a chemical vapor deposition (CVD) process or a spin-on coating process, wherein each of the dielectric layers **80** and **82** may be composed of a low-K oxide layer with a thickness of between 0.3 and 5 μm, and preferably of between 0.5 and 3 μm, and an oxynitride layer on the low-K oxide layer, of a low-K polymer layer with a thickness of between 0.3 and 5 μm, and preferably of between 0.5 and 3 μm, and an oxynitride layer on the low-K polymer layer, of a low-K oxide layer with a thickness of between 0.3 and 5 μm, and preferably of between 0.5 and 3 μm, and a nitride layer on the low-K oxide layer, of a low-K polymer layer with a thickness of between 0.3 and 5 μm, and preferably of between 0.5 and 3 μm, and a nitride layer on the low-K polymer layer, or of a low-K dielectric layer with a thickness of between 0.3 and 5 μm, and preferably of between 0.5 and 3 μm, and a nitride-containing layer on the low-K dielectric layer. Next, referring to FIG. **19***b*, a photoresist layer **84** is formed on the dielectric layer **82**, an opening **84***a* in the photoresist layer **84** exposing the dielectric layer **82**. Next, referring to FIG. **19***c*, the dielectric layer **82** under the

opening **84***a* is removed by a dry etching method to form a trench in the dielectric layer **82** exposing the dielectric layer **80**. Next, referring to FIG. **19***d*, after forming the trench in the dielectric layer **82**, the photoresist layer **84** is removed. Next, referring to FIG. **19***e*, a photoresist layer **86** is formed on the dielectric layer **82** and on the dielectric layer **80** exposed by the trench, an opening **86***a* in the photoresist layer **86** exposing the dielectric layer **80** exposed by the trench. Next, referring to FIG. **19***f*, the dielectric layer **80** under the opening **86***a* is removed by a dry etching method to form a via **80***a* in the dielectric layer **80** exposing the metal plugs **21** in the substrate **20**. Next, referring to FIG. **19***g*, after forming the via **80***a* in the dielectric layer **80**, the photoresist layer **86** is removed. Thereby, an opening **88** including the trench and the via **80***a* is formed in the dielectric layers **82** and **80**. Next, referring to FIG. **19***h*, an adhesion/barrier layer **90** having a thickness of between 0.1 and 3 micrometers is formed on the metal plugs **21** exposed by the opening **88**, on the sidewalls of the opening **88** and on the top surface of the dielectric layer **82**. The adhesion/barrier layer **90** can be formed by a sputtering process or a chemical vapor deposition (CVD) process. The material of the adhesion/barrier layer **90** may include titanium, titanium nitride, a titanium-tungsten alloy, tantalum, tantalum nitride, or a composite of the abovementioned materials. For example, the adhesion/barrier layer **90** may be formed by sputtering a tantalum layer on the metallization structure exposed by the opening **88**, on the sidewalls of the opening **88** and on the top surface of the dielectric layer **82**. Alternatively, the adhesion/barrier layer **90** may be formed by sputtering a tantalum-nitride layer on the metallization structure exposed by the opening **88**, on the sidewalls of the opening **88** and on the top surface of the dielectric layer **82**. Alternatively, the adhesion/barrier layer **90** may be formed by forming a tantalum-nitride layer on the metallization structure exposed by the opening **88**, on the sidewalls of the opening **88** and on the top surface of the dielectric layer **82** by a chemical vapor deposition (CVD) process. Next, referring to FIG. **19***i*, a seed layer **92**, made of copper, having a thickness of between 0.1 and 3 micrometers is formed on the adhesion/barrier layer **90** using a sputtering process or a chemical vapor deposition (CVD) process, and then a copper layer **94** having a thickness of between 0.5 and 5 μm, and preferably of between 1 and 2 μm, is electroplated on the seed layer **92**. Next, referring to FIG. **19***j*, the copper layer **94**, the seed layer **92** and the adhesion/barrier layer **90** outside the opening **88** in the dielectric layers **82** and **80** are removed using a chemical mechanical polishing (CMP) process until the top surface of the dielectric layer **82** is exposed to an ambient.

FIG. **20***a*-FIG. **20***i* illustrates an embossing process to form the first metal layer **26**, the second metal layer **28**, the third metal layer **34** and the fourth metal layer **36** on a top surface and a bottom surface of the first substrate **20**.

Referring to FIG. **20***a*, the metal plugs **21** are in the glass layer **16** of the first substrate **20**, and the opening **96***a* in the dielectric layer **96** exposes the metal trace **6**.

Referring to FIG. **20***a*, a polymer layer **98** can be formed on the dielectric layer **96**, and at least one opening **98***a* is formed in the polymer layer **98** by patterning the polymer layer **98** to expose at least one metal trace **6**, as shown in FIG. **20***b* and FIG. **20***c*. The metal plugs **21** may include a center portion exposed by an opening **98***a* and a peripheral portion covered with the polymer layer **98**, as shown in FIG. **20***b*. Alternatively, the opening **98***a* may expose the entire upper surface of the metal plugs **21** exposed by the opening **96***a* in the dielectric layer **96** and further may expose the upper surface of the dielectric layer **96** near the metal trace **6**, as shown in FIG. **20***c*.

The material of the polymer layer **98** may include benzocyclobutane (BCB), polyimide (PI), polyurethane, epoxy resin, a parylene-based polymer, a solder-mask material, an elastomer, or a porous dielectric material. The polymer layer **98** has a thickness of between 3 and 25 μm or between 5 and 50 micrometers.

The polymer layer **98** can be formed by a spin-on coating process, a lamination process or a screen-printing process. Below, the process of forming a patterned polymer layer **98** is exemplified with the case of spin-on coating a polyimide layer on the dielectric layer **96** and then patterning the polyimide layer. Alternatively, the polymer layer **98** can be formed by spin-on coating a layer of benzocyclobutane, polyurethane, epoxy resin, a parylene-based polymer, a solder-mask material, an elastomer or a porous dielectric material on the dielectric layer **96**, and then patterning the layer.

Referring to FIG. **20***d*, an adhesion/barrier layer **100** having a thickness of between 0.1 and 3 micrometers, and preferably between 0.5 and 2 micrometers, is formed on the polymer layer **98** and on the metal trace **6**. The adhesion/barrier layer **100** may be a titanium-tungsten-alloy layer, tantalum-containing layer, a chromium-containing layer or a titanium-nitride layer. The adhesion/barrier layer **100** may be formed by a sputtering method, an evaporation method, or a chemical vapor deposition (CVD) method.

Referring to FIG. **20***e*, a photoresist layer **102** can be formed on the adhesion/barrier layer **100** by a spin coating process or a lamination process. Referring to FIG. **20***f*, the photoresist layer **102** is patterned with the processes of exposure, development, etc., to form a photoresist opening **102***a* on the above-mentioned adhesion/barrier layer **100** over the metal plugs **21** exposed by the opening **98***a*.

Referring to FIG. **20***f*, the photoresist layer **102** is patterned with the processes of exposure, development, etc., to form a photoresist opening **102***a* on the adhesion/barrier layer **100** over the metal plugs **21** exposed by the opening **98***a*.

Referring to FIG. **20***g*, an electroplated metal layer **104** is formed on the adhesion/barrier layer **100** in the opening **102***a*, wherein the electroplated metal layer **104** comprises a copper layer, gold layer, a nickel layer, has a thickness between 2 and 10 micrometers, between 5 and 20 micrometers or between 5 and 35 micrometers.

Referring to FIG. **20***h*, removing the photoresist layer **102**.

Referring to FIG. **20***i*, the above-mentioned adhesion/barrier layer **100** not under the electroplated metal layer **104** is removed with a dry etching method or a wet etching method. For example, the adhesion/barrier layer **100** made of titanium, titanium-tungsten alloy, titanium nitride, tantalum or tantalum nitride, not under the electroplated metal layer **104** is removed with a reactive ion etching (RIE) process.

Referring to FIG. **21**, the first substrate **20** is connected to a OLED display substrate through COG bonding process, wherein the OLED display substrate comprises a first glass substrate **106**, a second glass substrate **108**, an organic light-emitting diodes layer **110** (or a polymer light-emitting diodes layer, PLED layer) between the first glass substrate **106** and the second glass substrate **108** and multiple transparent electrodes **112**. The metal bumps **72** are connected to the electrodes **112** through an anisotropic conductive film (ACF) layer **116**. The OLED display substrate comprises

multiple OLED display panels. The OLED display substrate may comprise touch screen function.

Next, cutting the first substrate **20** and the OLED display substrate to produce multiple package units.

Furthermore, the OLED display substrate can be replaced to a Micro Electro Mechanical Systems (MEMS) display substrate. Please referring to FIG. **22**, the first substrate **20** is connected to a MEMS display substrate through COG bonding process, wherein the MEMS display substrate comprises a first glass substrate **106**, a MEMS layer **109** and multiple transparent electrodes **112** formed on the first glass substrate **106**. The metal bumps **72** are connected to the electrodes **112** through an anisotropic conductive film (ACF) layer **116**. The MEMS display substrate comprises multiple MEMS display panels. The MEMS display substrate may comprise touch screen function.

Next, cutting the first substrate **20** and the MEMS display substrate to produce multiple package units.

Referring to FIG. **23**, multiple LED devices **122** are packaged on the bottom surface of the first substrate **20**. The first substrate **20** is connected to a LCD display substrate through COG bonding process, wherein the LCD display substrate comprises a first glass substrate **106**, a second glass substrate **108**, and a transistor liquid crystal display layer **111** between the first glass substrate **106** and the second glass substrate **108** and multiple transparent electrodes **112**. The metal bumps **72** are connected to the electrodes **112** through an anisotropic conductive film (ACF) layer **116**. The LCD display substrate comprises multiple LCD display panels. The LCD display substrate may comprise touch screen function, wherein the LCD display substrate comprise an in-cell TFT LCD substrate. There are multiple layers **128** between the first substrate **20** and LCD display substrate, such as a diffuser sheet layer, a prism sheet layer, a diffuser layer (or diffuser plate) and a reflector layer.

Next, cutting the first substrate **20** and the LCD display substrate to produce multiple package units.

Those described above are the embodiments to exemplify the present disclosure to enable the person skilled in the art to understand, make and use embodiments of the present disclosure. This description, however, is not intended to limit the scope of the present disclosure. Any equivalent modification and variation according to the spirit of the present disclosure is to be also included within the scope of the claims stated below.

The components, steps, features, benefits and advantages that have been discussed are merely illustrative. None of them, nor the discussions relating to them, are intended to limit the scope of protection in any way. Numerous other embodiments are also contemplated. These include embodiments that have fewer, additional, and/or different components, steps, features, benefits and advantages. These also include embodiments in which the components and/or steps are arranged and/or ordered differently.

In reading the present disclosure, one skilled in the art will appreciate that embodiments of the present disclosure can be implemented in hardware, software, firmware, or any combinations of such, and over one or more networks. Suitable software can include computer-readable or machine-readable instructions for performing methods and techniques (and portions thereof) of designing and/or controlling the fabrication and design of integrated circuit chips according to the present disclosure. Any suitable software language (machine-dependent or machine-independent) may be utilized. Moreover, embodiments of the present disclosure can be included in or carried by various signals, e.g., as transmitted over a wireless radio frequency (RF) or infrared (IR) communications link or downloaded from the Internet.

Unless otherwise stated, all measurements, values, ratings, positions, magnitudes, sizes, and other specifications that are set forth in this specification, including in the claims that follow, are approximate, not exact. They are intended to have a reasonable range that is consistent with the functions to which they relate and with what is customary in the art to which they pertain. The scope of protection is limited solely by the claims. That scope is intended and should be interpreted to be as broad as is consistent with the ordinary meaning of the language that is used in the claims when interpreted in light of this specification and the prosecution history that follows and to encompass all structural and functional equivalents.

What is claimed is:

1. A structure comprising:

a first glass substrate having a first surface and a second surface opposed to said first surface, wherein said first surface is parallel to said second surface, multiple conductors extending through said first glass substrate beginning at said first surface and ending at said second surface and a first metal layer under said second surface connected to one of said conductors, wherein one of said conductors comprises a cross-section surface parallel to said first surface, wherein said cross-section surface comprises a first edge, a second edge opposite to and substantially parallel with said first edge, a third edge and a fourth edge opposite to said third edge, wherein said first edge has a first length is greater than that of said third and fourth edges, wherein said second edge has a second length is greater than that of said third and fourth edges, wherein said conductors comprises a first sidewall, a second sidewall opposite to and substantially parallel with said first sidewall, a third sidewall and a fourth sidewall opposite to said third sidewall;

a first chip over said first surface and connected to said first metal layer through one of said conductors; and

a second glass substrate of a display substrate is under said first glass substrate, wherein said first metal layer is connected to an electrode of said display substrate.

2. The substrate of claim **1**, further comprising an oxide-containing layer formed on said first and second edges, wherein said oxide-containing layer is between said copper layer and a glass layer of said solid glass core.

3. The substrate of claim **1**, further comprising a second chip over said first surface, wherein a contact point of said second chip is electrically coupled with one of said conductors.

4. The substrate of claim **1**, further comprising a second chip over said first surface and an electronic component under said second surface, wherein said chip is electrically coupled to said electronic component through one of said conductors.

5. The substrate of claim **1**, further comprising a nickel-containing layer formed on said first and second edges.

6. The substrate of claim **1**, further comprising a second chip and a third chip over said first surface, wherein said third chip is over said second chip, wherein a through-silicon-via metal layer in said second chip.

7. The substrate of claim **1**, further comprising a second chip over said first surface and a passive component under said second surface, wherein said first chip is electrically coupled to said passive component through one of said conductors.

8. The substrate of claim **1**, wherein said one of said conductors comprises a copper layer.

9. The substrate of claim **1**, wherein said display substrate comprises a LCD display substrate.

10. The substrate of claim **1**, wherein said first glass substrate comprises a solid glass core has a glass transition temperature between 300° C. and 900° C.

11. The substrate of claim **1**, wherein said cross-section surface is a rectangular shape.

12. The substrate of claim **1**, wherein said conductors comprises a first conductor and a second conductor, wherein a second metal layer is over said first surface and connected to said first and second conductors.

13. The substrate of claim **1**, wherein said one of said conductors comprise a top end and a bottom end, wherein said top and bottom ends have substantially the same width.

14. The substrate of claim **1**, wherein said one of said conductors comprise a top surface and a bottom surface, wherein said top and bottom surfaces have substantially the same area size.

15. The substrate of claim **1**, wherein said display substrate comprises a Micro Electro Mechanical Systems (MEMS) display substrate.

16. The substrate of claim **1**, wherein said display substrate comprises an OLED display substrate.

17. The substrate of claim **1**, further comprising a LED device at said second surface, wherein said LED device is connected to said first chip through said conductors.

18. The substrate of claim **1**, wherein said metal layer comprises a gold layer.

19. The substrate of claim **1**, wherein said metal layer comprises an aluminum layer.

20. The substrate of claim **1**, wherein said metal layer comprises a tin-containing layer.

* * * * *