US 20110215458A1

(19) United States

(12) Patent Application Publication

(10) Pub. No.: US 2011/0215458 A1

(43) Pub. Date: Sep. 8, 2011

Camacho et al.

(54) SEMICONDUCTOR DEVICE AND METHOD OF FORMING PACKAGE-ON-PACKAGE STRUCTURE ELECTRICALLY INTERCONNECTED THROUGH TSV IN WLCSP

(75) Inventors: **Zigmund R. Camacho**, Singapore (SG); **Dioscoro A. Merilo**, Singapore (SG); **Lionel Chien Hui Tay**, Singapore (SG)

(73) Assignee: **STATS CHIPPAC, LTD.**, Singapore (SG)

(21) Appl. No.: **12/717,335**

(22) Filed: **Mar. 4, 2010**

Publication Classification

(51) **Int. Cl.**
H01L 23/52 (2006.01)
H01L 21/60 (2006.01)

(52) **U.S. Cl.** **257/686**; 438/107; 257/E21.506; 257/E23.141

(57) **ABSTRACT**

A semiconductor wafer has a plurality of semiconductor die. First and second conductive layers are formed over opposing surfaces of the semiconductor die, respectively. Each semiconductor die constitutes a WLCSP. A TSV is formed through the WLCSP. A semiconductor component is mounted to the WLCSP. The first semiconductor component is electrically connected to the first conductive layer. A first bump is formed over the first conductive layer, and a second bump is formed over the second conductive layer. An encapsulant is deposited over the first bump and first semiconductor component. A second semiconductor component is mounted to the first bump. The second semiconductor component is electrically connected to the first semiconductor component and WLCSP through the first bump and TSV. A third semiconductor component is mounted to the first semiconductor component, and a fourth semiconductor component is mounted to the third semiconductor component.

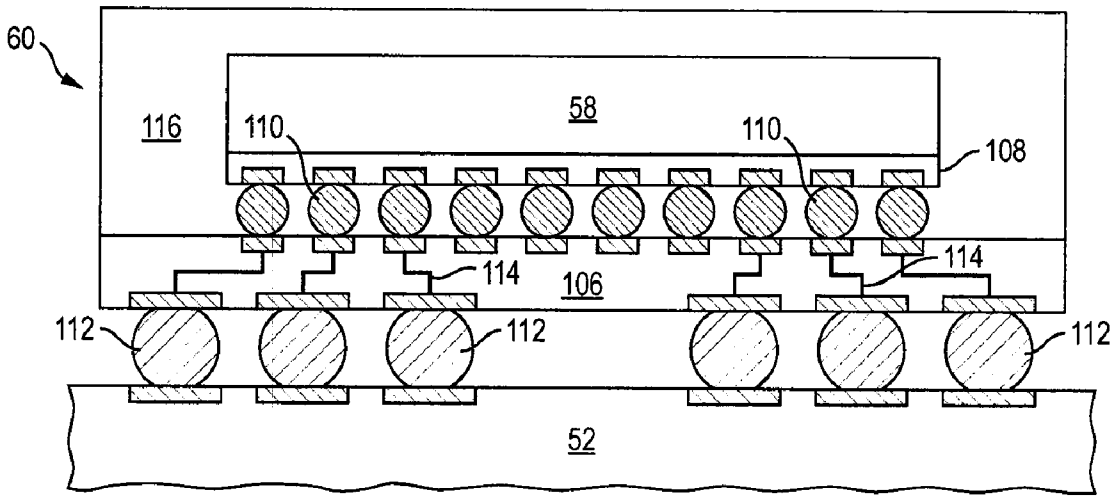

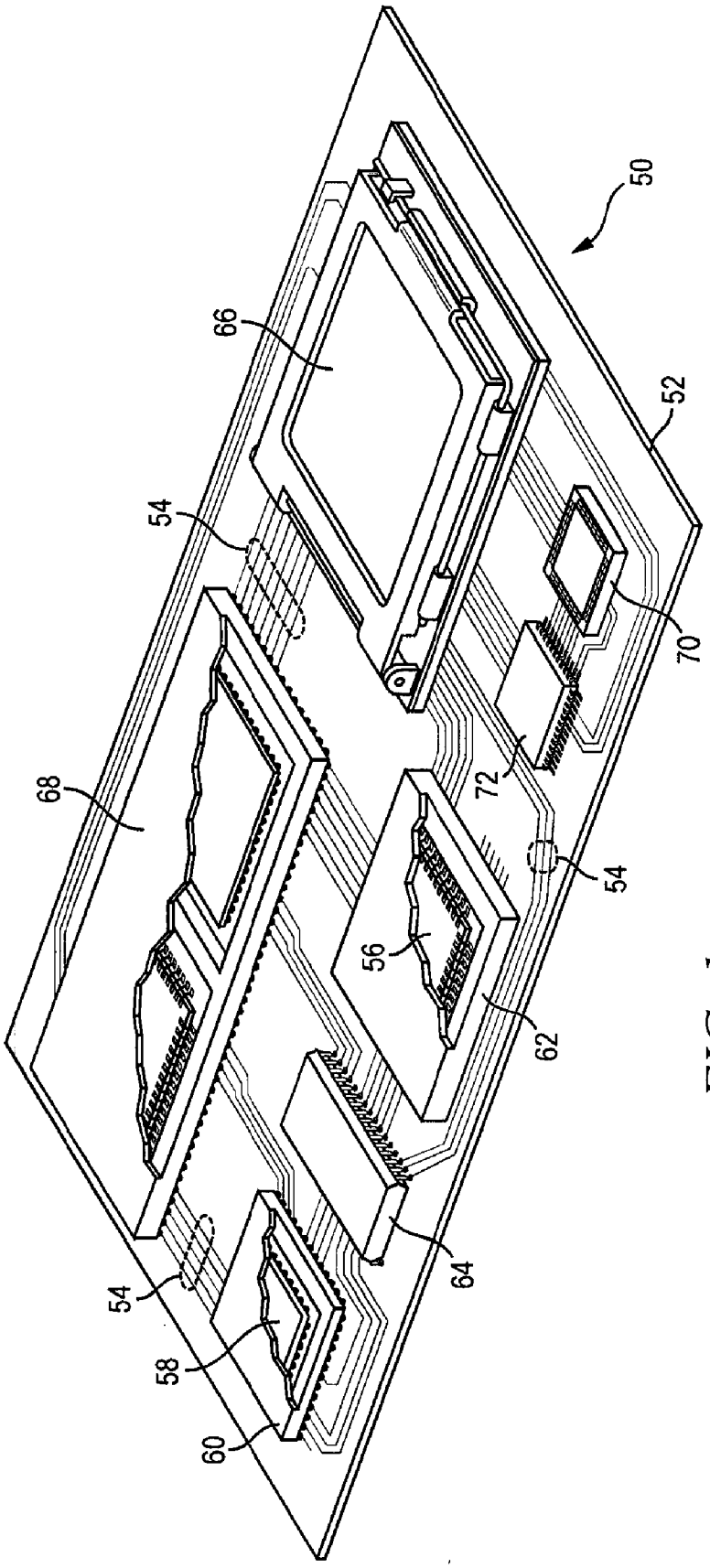

FIG. 1

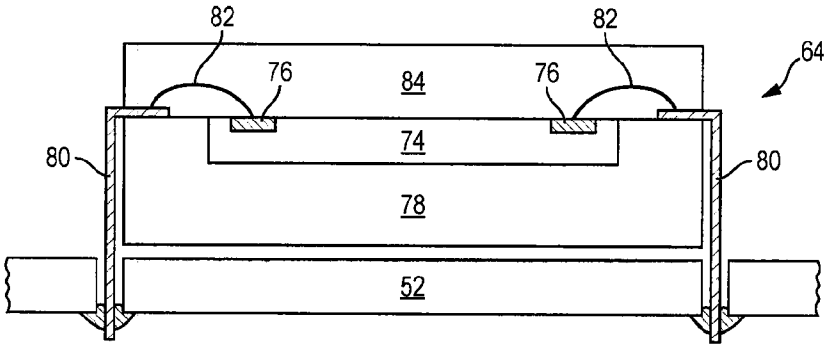

FIG. 2a

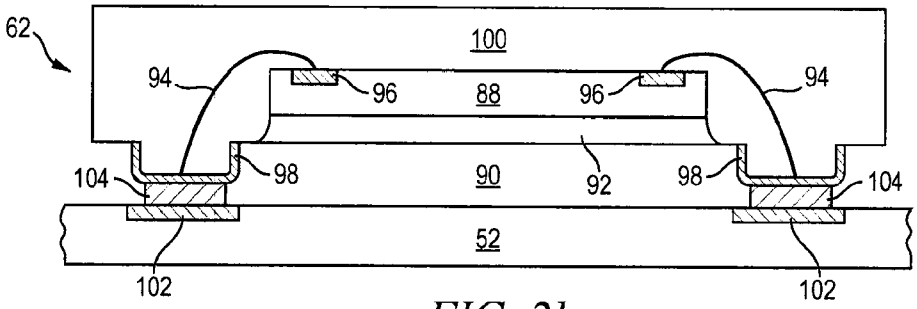

FIG. 2b

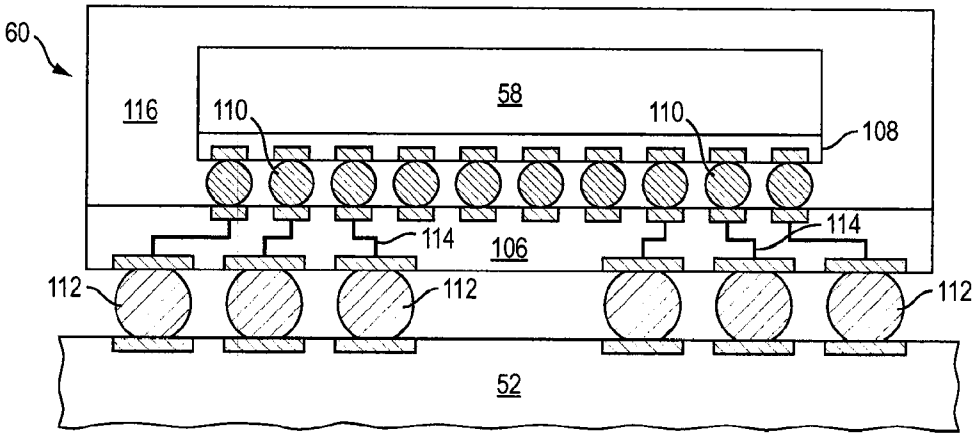

FIG. 2c

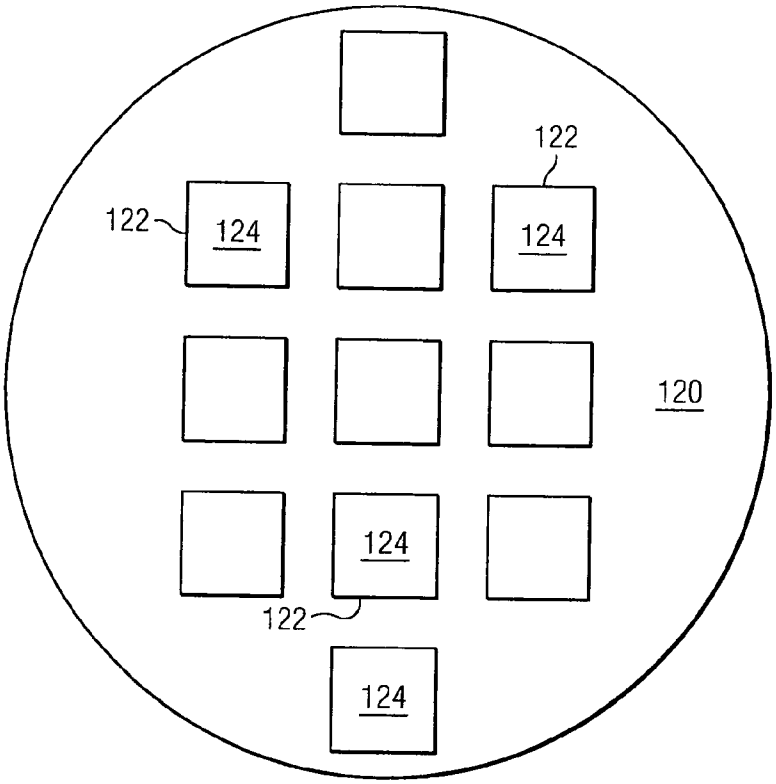

FIG. 3a

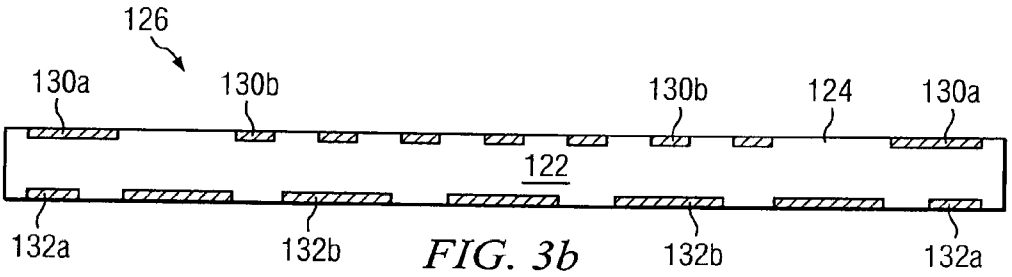

FIG. 3b

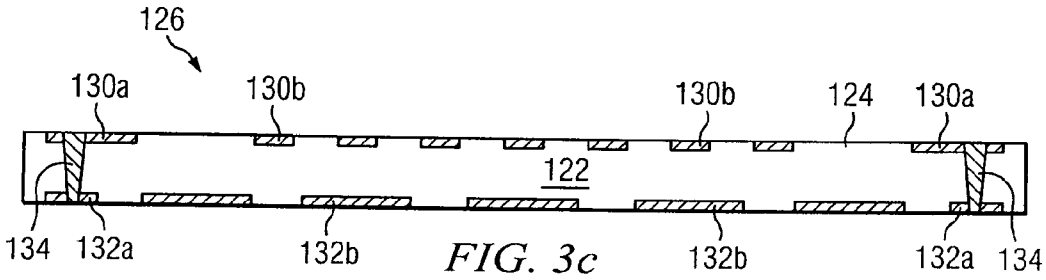

FIG. 3c

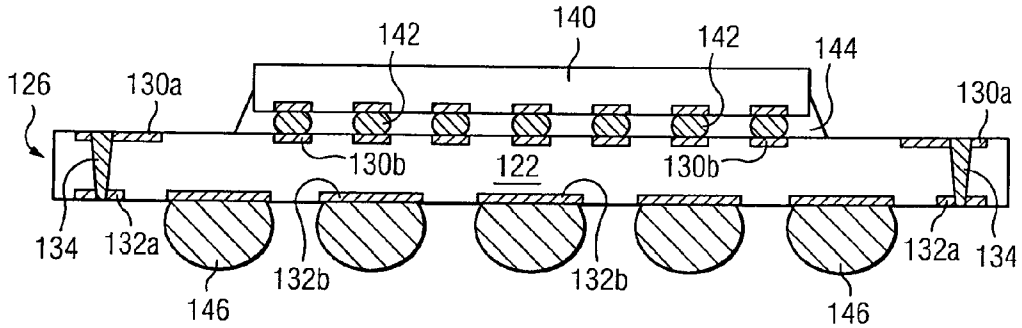

FIG. 3d

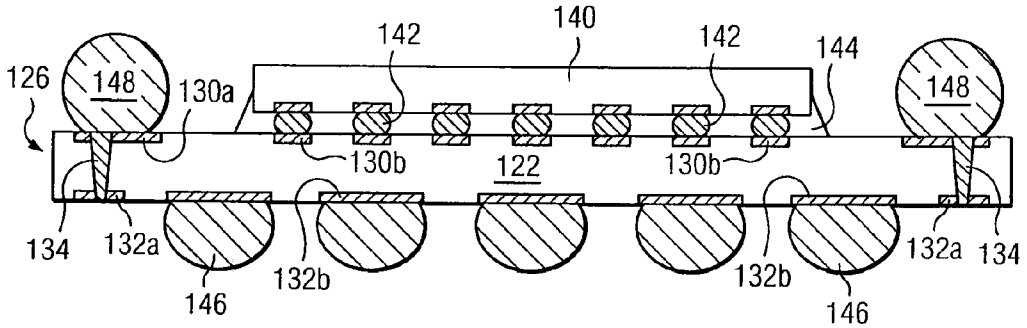

FIG. 3e

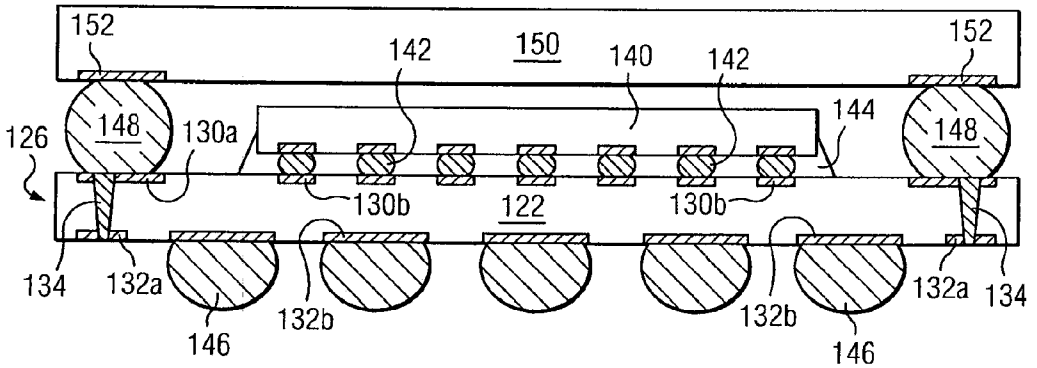

FIG. 3f

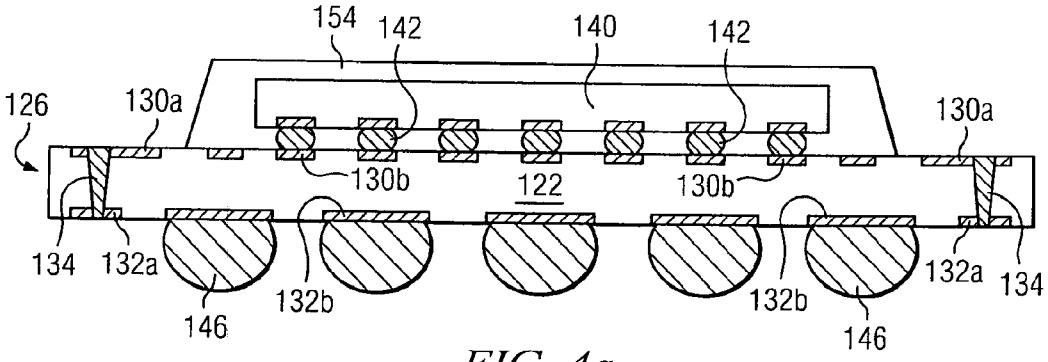

FIG. 4a

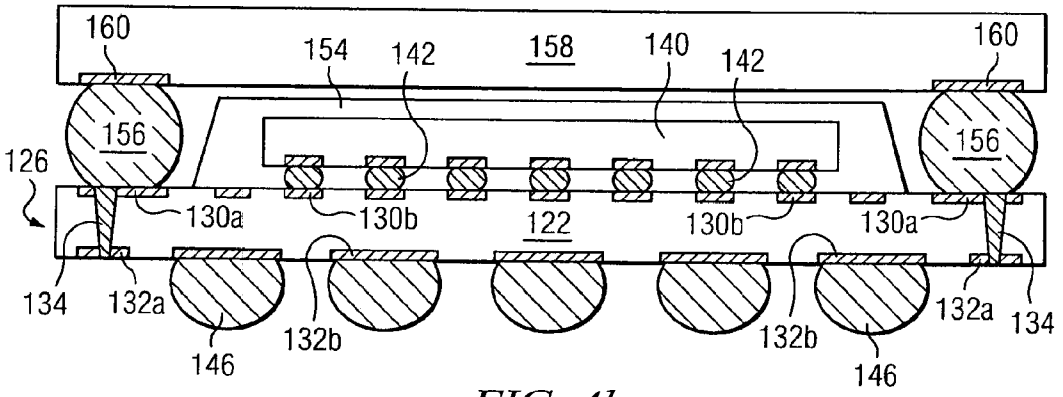

FIG. 4b

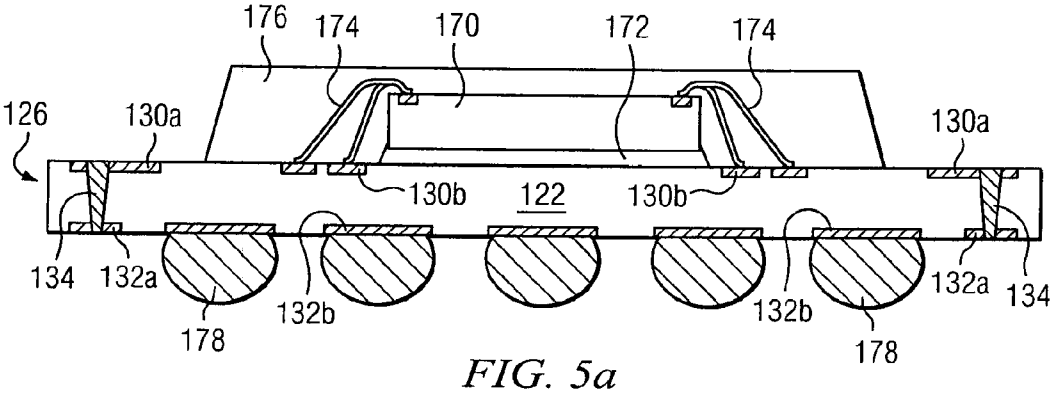

FIG. 5a

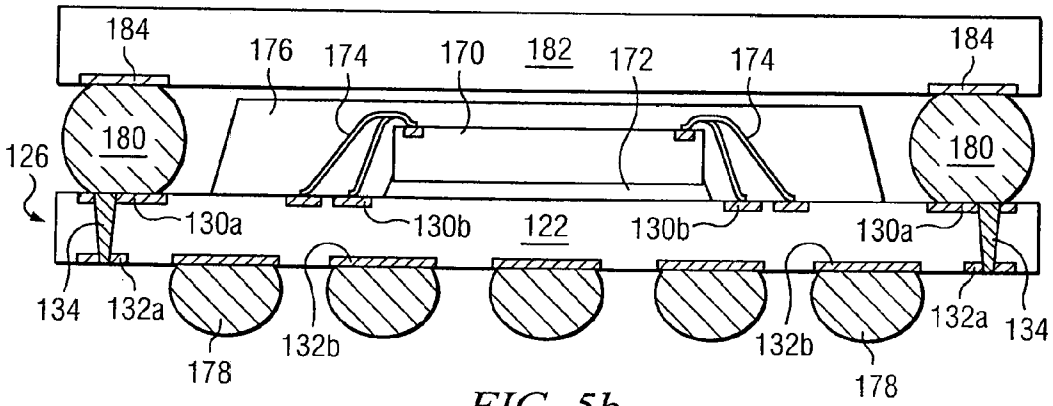

FIG. 5b

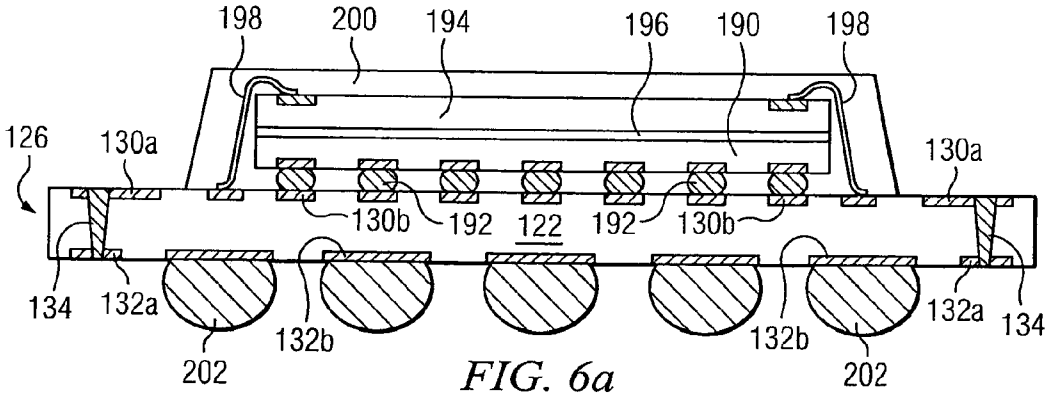

FIG. 6a

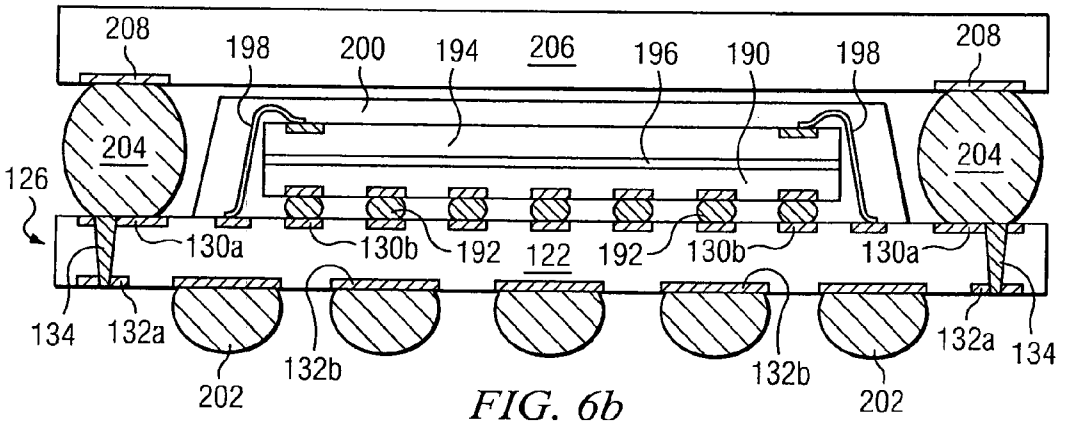

FIG. 6b

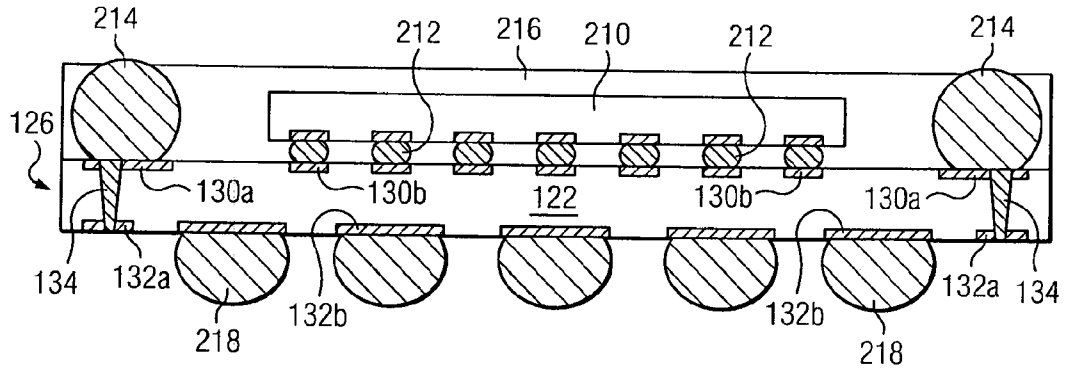

FIG. 7a

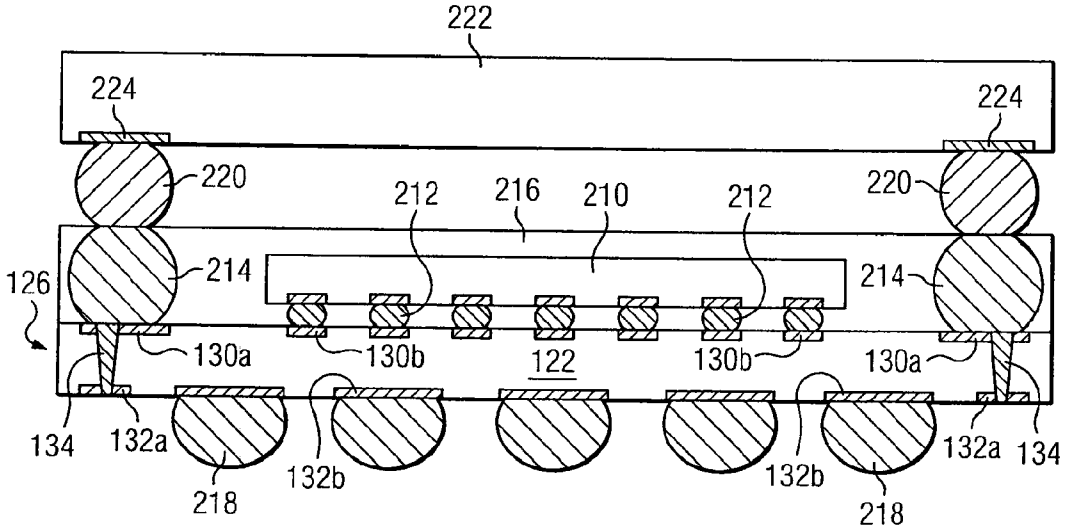

FIG. 7b

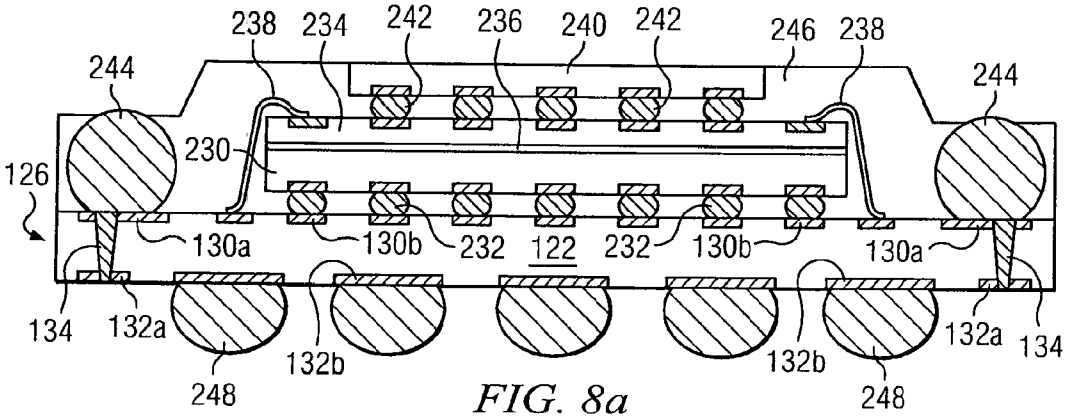

FIG. 8a

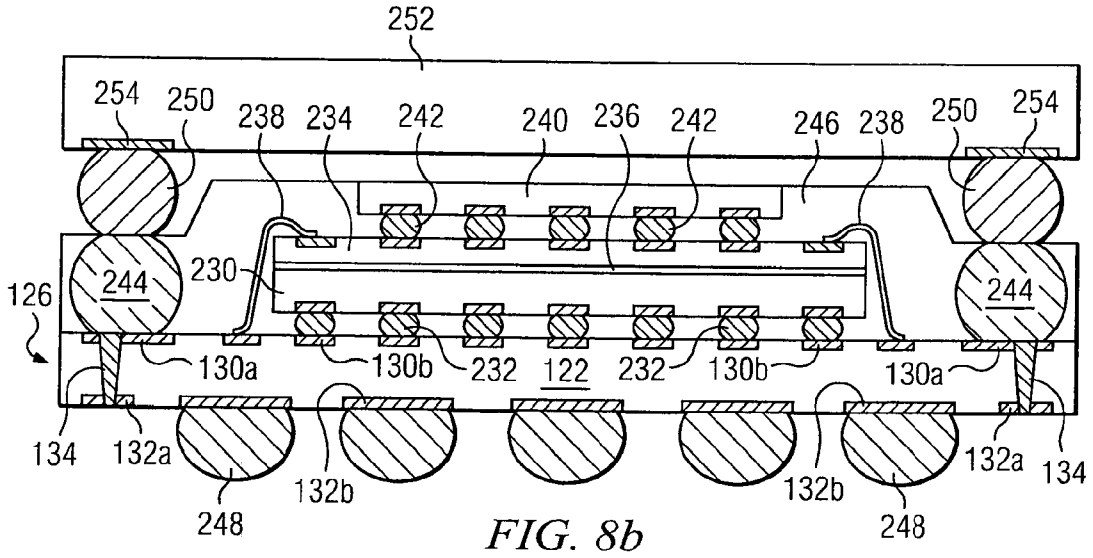

FIG. 8b

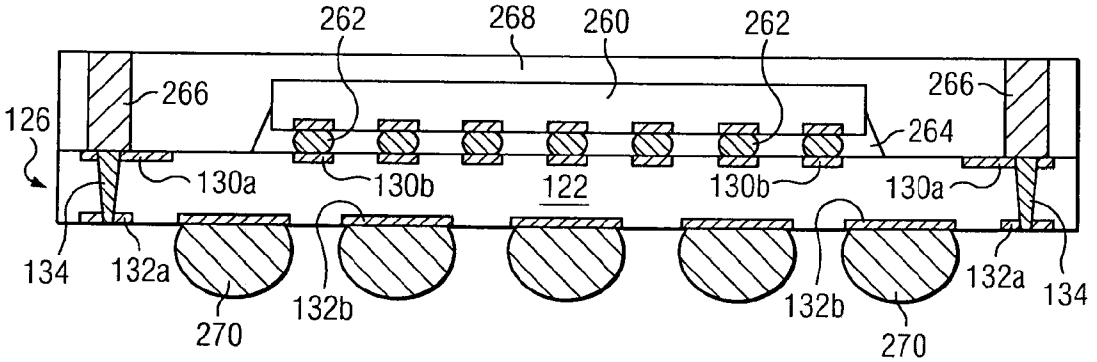

FIG. 9a

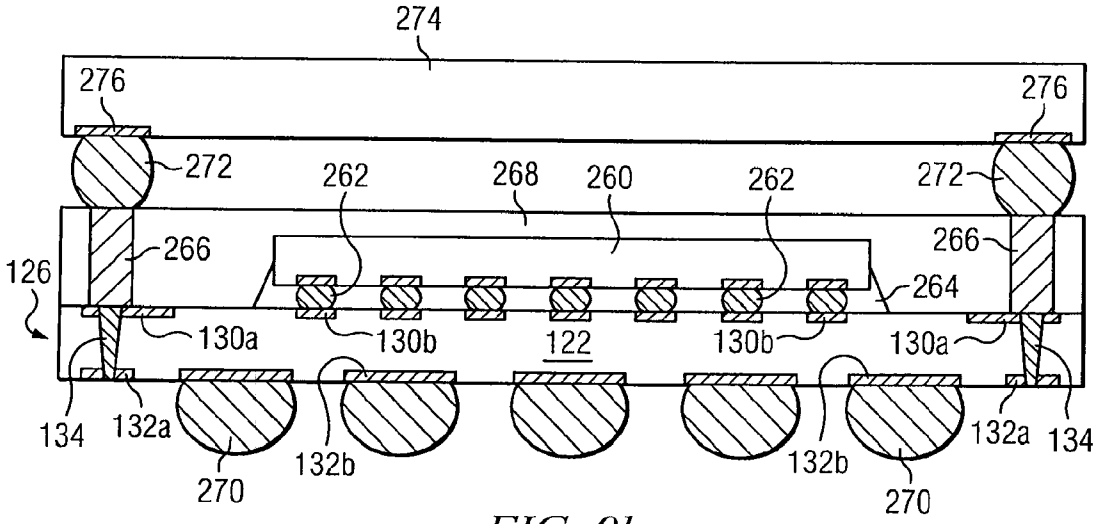

FIG. 9b

SEMICONDUCTOR DEVICE AND METHOD OF FORMING PACKAGE-ON-PACKAGE STRUCTURE ELECTRICALLY INTERCONNECTED THROUGH TSV IN WLCSP

FIELD OF THE INVENTION

[0001] The present invention relates in general to semiconductor devices and, more particularly, to a PoP structure electrically interconnected through TSV formed in a WLCSP.

BACKGROUND OF THE INVENTION

[0002] Semiconductor devices are commonly found in modern electronic products. Semiconductor devices vary in the number and density of electrical components. Discrete semiconductor devices generally contain one type of electrical component, e.g., light emitting diode (LED), small signal transistor, resistor, capacitor, inductor, and power metal oxide semiconductor field effect transistor (MOSFET). Integrated semiconductor devices typically contain hundreds to millions of electrical components. Examples of integrated semiconductor devices include microcontrollers, microprocessors, charged-coupled devices (CCDs), solar cells, and digital micro-mirror devices (DMDs).

[0003] Semiconductor devices perform a wide range of functions such as high-speed calculations, transmitting and receiving electromagnetic signals, controlling electronic devices, transforming sunlight to electricity, and creating visual projections for television displays. Semiconductor devices are found in the fields of entertainment, communications, power conversion, networks, computers, and consumer products. Semiconductor devices are also found in military applications, aviation, automotive, industrial controllers, and office equipment.

[0004] Semiconductor devices exploit the electrical properties of semiconductor materials. The atomic structure of semiconductor material allows its electrical conductivity to be manipulated by the application of an electric field or base current or through the process of doping. Doping introduces impurities into the semiconductor material to manipulate and control the conductivity of the semiconductor device.

[0005] A semiconductor device contains active and passive electrical structures. Active structures, including bipolar and field effect transistors, control the flow of electrical current. By varying levels of doping and application of an electric field or base current, the transistor either promotes or restricts the flow of electrical current. Passive structures, including resistors, capacitors, and inductors, create a relationship between voltage and current necessary to perform a variety of electrical functions. The passive and active structures are electrically connected to form circuits, which enable the semiconductor device to perform high-speed calculations and other useful functions.

[0006] Semiconductor devices are generally manufactured using two complex manufacturing processes, i.e., front-end manufacturing, and back-end manufacturing, each involving potentially hundreds of steps. Front-end manufacturing involves the formation of a plurality of die on the surface of a semiconductor wafer. Each die is typically identical and contains circuits formed by electrically connecting active and passive components. Back-end manufacturing involves singulating individual die from the finished wafer and packaging the die to provide structural support and environmental isolation.

[0007] One goal of semiconductor manufacturing is to produce smaller semiconductor devices. Smaller devices typically consume less power, have higher performance, and can be produced more efficiently. In addition, smaller semiconductor devices have a smaller footprint, which is desirable for smaller end products. A smaller die size may be achieved by improvements in the front-end process resulting in die with smaller, higher density active and passive components. Back-end processes may result in semiconductor device packages with a smaller footprint by improvements in electrical interconnection and packaging materials.

[0008] The electrical interconnection between a wafer level chip scale package (WLCSP) containing semiconductor devices on multiple levels (3-D device integration) and external devices can be accomplished with conductive through silicon vias (TSV) or through hole vias (THV). In most TSVs and THVs, the sidewalls and bottom-side of the via are conformally plated with conductive materials to enhance adhesion. The TSVs and THVs are then filled with another conductive material, for example, by copper deposition through an electroplating process.

[0009] In a package-on-package (PoP) arrangement, the vertical z-direction interconnection may use a TSV interposer and solder bump on a wire bond die. However, the device integration is complex and package laminate increases production costs.

SUMMARY OF THE INVENTION

[0010] A need exists for PoP vertical integration compatible with WLCSPs. Accordingly, in one embodiment, the present invention is a method of making a semiconductor device comprising the steps of providing a semiconductor wafer having a plurality of semiconductor die, and forming first and second conductive layers over first and second opposing surfaces of the semiconductor die, respectively. Each semiconductor die constitutes a WLCSP. The method further includes the steps of forming a TSV through the WLCSP, mounting a first semiconductor component to the WLCSP, electrically connecting the first semiconductor component to the first conductive layer, forming a first bump over the first conductive layer, and mounting a second semiconductor component to the first bump. The second semiconductor component is electrically connected to the first semiconductor component and WLCSP through the first bump and TSV. The method further includes singulating the semiconductor wafer.

[0011] In another embodiment, the present invention is a method of making a semiconductor device comprising the steps of providing a semiconductor wafer having a plurality of semiconductor die, and forming a first conductive layer over a first surface of the semiconductor die. Each semiconductor die constitutes a WLCSP. The method further includes the steps of forming a TSV through the WLCSP, mounting a first semiconductor component to the WLCSP, forming a first interconnect structure over the first conductive layer, and mounting a second semiconductor component to the first interconnect structure. The second semiconductor component is electrically connected to the first semiconductor component and WLCSP through the first interconnect structure and TSV.

[0012] In another embodiment, the present invention is a method of making a semiconductor device comprising the steps of providing a WLCSP having a first conductive layer formed over a first surface of the WLCSP, forming a TSV through the WLCSP, mounting a first semiconductor component to the WLCSP, forming a first interconnect structure over the first conductive layer, and mounting a second semiconductor component to the first interconnect structure. The second semiconductor component is electrically connected to the first semiconductor component and WLCSP through the first interconnect structure and TSV.

[0013] In another embodiment, the present invention is a semiconductor device comprising a WLCSP having a first conductive layer formed over a first surface of the WLCSP. A TSV is formed through the WLCSP. A first semiconductor component is mounted to the WLCSP. A first interconnect structure is formed over the first conductive layer. A second semiconductor component is mounted to the first interconnect structure. The second semiconductor component is electrically connected to the first semiconductor component and WLCSP through the first interconnect structure and TSV.

BRIEF DESCRIPTION OF THE DRAWINGS

[0014] FIG. **1** illustrates a PCB with different types of packages mounted to its surface;

[0015] FIGS. **2***a*-**2***c* illustrate further detail of the representative semiconductor packages mounted to the PCB;

[0016] FIGS. **3***a*-**3***f* illustrate a process of forming a conductive TSV through a WLCSP and electrically interconnecting a PoP structure through the TSV;

[0017] FIGS. **4***a*-**4***b* illustrate a PoP structure with a flipchip die electrically interconnected through TSV in the WLCSP;

[0018] FIGS. **5***a*-**5***b* illustrate a PoP structure with a wire bond die electrically interconnected through TSV in the WLCSP;

[0019] FIGS. **6***a*-**6***b* illustrate a PoP structure with stacked wire bond die and flipchip die electrically interconnected through TSV in the WLCSP;

[0020] FIGS. **7***a*-**7***b* illustrate a PoP structure with bump transposer electrically interconnected through TSV in the WLCSP;

[0021] FIGS. **8***a*-**8***b* illustrate a PoP structure with wire bond die and flipchip die and bump transposer electrically interconnected through TSV in the WLCSP; and

[0022] FIGS. **9***a*-**9***b* illustrate a PoP structure with conductive pillar transposer electrically interconnected through TSV in the WLCSP.

DETAILED DESCRIPTION OF THE DRAWINGS

[0023] The present invention is described in one or more embodiments in the following description with reference to the figures, in which like numerals represent the same or similar elements. While the invention is described in terms of the best mode for achieving the invention's objectives, it will be appreciated by those skilled in the art that it is intended to cover alternatives, modifications, and equivalents as may be included within the spirit and scope of the invention as defined by the appended claims and their equivalents as supported by the following disclosure and drawings.

[0024] Semiconductor devices are generally manufactured using two complex manufacturing processes: front-end manufacturing and back-end manufacturing. Front-end manufacturing involves the formation of a plurality of die on the surface of a semiconductor wafer. Each die on the wafer contains active and passive electrical components, which are electrically connected to form functional electrical circuits. Active electrical components, such as transistors and diodes, have the ability to control the flow of electrical current. Passive electrical components, such as capacitors, inductors, resistors, and transformers, create a relationship between voltage and current necessary to perform electrical circuit functions.

[0025] Passive and active components are formed over the surface of the semiconductor wafer by a series of process steps including doping, deposition, photolithography, etching, and planarization. Doping introduces impurities into the semiconductor material by techniques such as ion implantation or thermal diffusion. The doping process modifies the electrical conductivity of semiconductor material in active devices, transforming the semiconductor material into an insulator, conductor, or dynamically changing the semiconductor material conductivity in response to an electric field or base current. Transistors contain regions of varying types and degrees of doping, arranged as necessary, to enable the transistor to promote or restrict the flow of electrical current upon the application of the electric field or base current.

[0026] Active and passive components are formed by layers of materials with different electrical properties. The layers can be formed by a variety of deposition techniques determined in part by the type of material being deposited. For example, thin film deposition may involve chemical vapor deposition (CVD), physical vapor deposition (PVD), electrolytic plating, and electroless plating processes. Each layer is generally patterned to form portions of active components, passive components, or electrical connections between components.

[0027] The layers can be patterned using photolithography, which involves the deposition of light sensitive material, e.g., photoresist, over the layer to be patterned. A pattern is transferred from a photomask to the photoresist using light. The portion of the photoresist pattern subjected to light is removed using a solvent, exposing portions of the underlying layer to be patterned. The remainder of the photoresist is removed, leaving behind a patterned layer. Alternatively, some types of materials are patterned by directly depositing the material into the areas or voids formed by a previous deposition/etch process using techniques such as electroless and electrolytic plating.

[0028] Depositing a thin film of material over an existing pattern can exaggerate the underlying pattern and create a non-uniformly flat surface. A uniformly flat surface is required to produce smaller and more densely packed active and passive components. Planarization can be used to remove material from the surface of the wafer and produce a uniformly flat surface. Planarization involves polishing the surface of the wafer with a polishing pad. An abrasive material and corrosive chemical are added to the surface of the wafer during polishing. The combined mechanical action of the abrasive and corrosive action of the chemical removes any irregular topography, resulting in a uniformly flat surface.

[0029] Back-end manufacturing refers to cutting or singulating the finished wafer into the individual die and then packaging the die for structural support and environmental isolation. To singulate the die, the wafer is scored and broken along non-functional regions of the wafer called saw streets or scribes. The wafer is singulated using a laser cutting tool or saw blade. After singulation, the individual die are mounted

to a package substrate that includes pins or contact pads for interconnection with other system components. Contact pads formed over the semiconductor die are then connected to contact pads within the package. The electrical connections can be made with solder bumps, stud bumps, conductive paste, or wirebonds. An encapsulant or other molding material is deposited over the package to provide physical support and electrical isolation. The finished package is then inserted into an electrical system and the functionality of the semiconductor device is made available to the other system components.

[0030] FIG. **1** illustrates electronic device **50** having a chip carrier substrate or printed circuit board (PCB) **52** with a plurality of semiconductor packages mounted on its surface. Electronic device **50** may have one type of semiconductor package, or multiple types of semiconductor packages, depending on the application. The different types of semiconductor packages are shown in FIG. **1** for purposes of illustration.

[0031] Electronic device **50** may be a stand-alone system that uses the semiconductor packages to perform one or more electrical functions. Alternatively, electronic device **50** may be a subcomponent of a larger system. For example, electronic device **50** may be a graphics card, network interface card, or other signal processing card that can be inserted into a computer. The semiconductor package can include microprocessors, memories, application specific integrated circuits (ASIC), logic circuits, analog circuits, RF circuits, discrete devices, or other semiconductor die or electrical components.

[0032] In FIG. **1**, PCB **52** provides a general substrate for structural support and electrical interconnect of the semiconductor packages mounted on the PCB. Conductive signal traces **54** are formed over a surface or within layers of PCB **52** using evaporation, electrolytic plating, electroless plating, screen printing, or other suitable metal deposition process. Signal traces **54** provide for electrical communication between each of the semiconductor packages, mounted components, and other external system components. Traces **54** also provide power and ground connections to each of the semiconductor packages.

[0033] In some embodiments, a semiconductor device has two packaging levels. First level packaging is a technique for mechanically and electrically attaching the semiconductor die to an intermediate carrier. Second level packaging involves mechanically and electrically attaching the intermediate carrier to the PCB. In other embodiments, a semiconductor device may only have the first level packaging where the die is mechanically and electrically mounted directly to the PCB.

[0034] For the purpose of illustration, several types of first level packaging, including wire bond package **56** and flip chip **58**, are shown on PCB **52**. Additionally, several types of second level packaging, including ball grid array (BGA) **60**, bump chip carrier (BCC) **62**, dual in-line package (DIP) **64**, land grid array (LGA) **66**, multi-chip module (MCM) **68**, quad flat non-leaded package (QFN) **70**, and quad flat package **72**, are shown mounted on PCB **52**. Depending upon the system requirements, any combination of semiconductor packages, configured with any combination of first and second level packaging styles, as well as other electronic components, can be connected to PCB **52**. In some embodiments, electronic device **50** includes a single attached semiconductor package, while other embodiments call for multiple interconnected packages. By combining one or more semiconductor packages over a single substrate, manufacturers can incorporate pre-made components into electronic devices and systems. Because the semiconductor packages include sophisticated functionality, electronic devices can be manufactured using cheaper components and a streamlined manufacturing process. The resulting devices are less likely to fail and less expensive to manufacture resulting in a lower cost for consumers.

[0035] FIGS. **2***a*-**2***c* show exemplary semiconductor packages. FIG. **2***a* illustrates further detail of DIP **64** mounted on PCB **52**. Semiconductor die **74** includes an active region containing analog or digital circuits implemented as active devices, passive devices, conductive layers, and dielectric layers formed within the die and are electrically interconnected according to the electrical design of the die. For example, the circuit may include one or more transistors, diodes, inductors, capacitors, resistors, and other circuit elements formed within the active region of semiconductor die **74**. Contact pads **76** are one or more layers of conductive material, such as aluminum (Al), copper (Cu), tin (Sn), nickel (Ni), gold (Au), or silver (Ag), and are electrically connected to the circuit elements formed within semiconductor die **74**. During assembly of DIP **64**, semiconductor die **74** is mounted to an intermediate carrier **78** using a gold-silicon eutectic layer or adhesive material such as thermal epoxy or epoxy resin. The package body includes an insulative packaging material such as polymer or ceramic. Conductor leads **80** and wire bonds **82** provide electrical interconnect between semiconductor die **74** and PCB **52**. Encapsulant **84** is deposited over the package for environmental protection by preventing moisture and particles from entering the package and contaminating die **74** or wire bonds **82**.

[0036] FIG. **2***b* illustrates further detail of BCC **62** mounted on PCB **52**. Semiconductor die **88** is mounted over carrier **90** using an underfill or epoxy-resin adhesive material **92**. Wire bonds **94** provide first level packaging interconnect between contact pads **96** and **98**. Molding compound or encapsulant **100** is deposited over semiconductor die **88** and wire bonds **94** to provide physical support and electrical isolation for the device. Contact pads **102** are formed over a surface of PCB **52** using a suitable metal deposition process such as electrolytic plating or electroless plating to prevent oxidation. Contact pads **102** are electrically connected to one or more conductive signal traces **54** in PCB **52**. Bumps **104** are formed between contact pads **98** of BCC **62** and contact pads **102** of PCB **52**.

[0037] In FIG. **2***c*, semiconductor die **58** is mounted face down to intermediate carrier **106** with a flip chip style first level packaging. Active region **108** of semiconductor die **58** contains analog or digital circuits implemented as active devices, passive devices, conductive layers, and dielectric layers formed according to the electrical design of the die. For example, the circuit may include one or more transistors, diodes, inductors, capacitors, resistors, and other circuit elements within active region **108**. Semiconductor die **58** is electrically and mechanically connected to carrier **106** through bumps **110**.

[0038] BGA **60** is electrically and mechanically connected to PCB **52** with a BGA style second level packaging using bumps **112**. Semiconductor die **58** is electrically connected to conductive signal traces **54** in PCB **52** through bumps **110**, signal lines **114**, and bumps **112**. A molding compound or encapsulant **116** is deposited over semiconductor die **58** and carrier **106** to provide physical support and electrical isolation for the device. The flip chip semiconductor device pro-

vides a short electrical conduction path from the active devices on semiconductor die **58** to conduction tracks on PCB **52** in order to reduce signal propagation distance, lower capacitance, and improve overall circuit performance. In another embodiment, the semiconductor die **58** can be mechanically and electrically connected directly to PCB **52** using flip chip style first level packaging without intermediate carrier **106**.

[0039] FIGS. **3***a*-**3***f* illustrate, in relation to FIGS. **1** and **2***a*-**2***c*, a process of forming a conductive TSV through a WLCSP and vertically stacking semiconductor packages over the WLCSP which are electrically interconnected through the TSV. FIG. **3***a* shows a semiconductor wafer **120** containing a base substrate material such as silicon, germanium, gallium arsenide, indium phosphide, or silicon carbide, for structural support. A plurality of semiconductor die **122** is formed on wafer **120** as described above. Each semiconductor die **122** includes an active surface **124** containing analog or digital circuits implemented as active devices, passive devices, conductive layers, and dielectric layers formed within the die and electrically interconnected according to the electrical design and function of the die. For example, the circuit may include one or more transistors, diodes, and other circuit elements formed within active surface **124** to implement analog circuits or digital circuits, such as digital signal processor (DSP), ASIC, memory, or other signal processing circuit. Semiconductor die **122** may also contain IPDS, such as inductors, capacitors, and resistors, for RF signal processing.

[0040] In the WLCSP, the interconnect structure is formed on the semiconductor wafer prior to singulation. Once singulated, the WLCSP is ready for mounting to other devices and structures, for example, using surface mount technology (SMT) to a PCB. The WLCSP is a chip-size product and provides the relative low cost of wafer-level processing.

[0041] FIG. **3***b* shows a cross-sectional view of one die **122** of semiconductor wafer **120**, prior to singulation. An electrically conductive layer **130** is formed over the top active surface of semiconductor die **122** using patterning with PVD, CVD, sputtering, electrolytic plating, electroless plating process, or other suitable metal deposition process to form individual portions or sections **130***a*-**130***b*. Likewise, an electrically conductive layer **132** is formed over the bottom surface of semiconductor die **122**, opposite active surface **124**, using patterning with PVD, CVD, sputtering, electrolytic plating, electroless plating process, or other suitable metal deposition process to form individual portions or sections **132***a*-**132***b*. Conductive layers **130** and **132** can be one or more layers of Al, Cu, Sn, Ni, Au, Ag, or other suitable electrically conductive material. The portions of conductive layers **130** and **132** can be electrically common or electrically isolated depending on the design and function of the semiconductor device. The interconnect structure **130**-**132** formed over semiconductor die **122** constitute the beginning stage of forming WLCSP **126**.

[0042] In one embodiment, conductive layers **130** and **132** are under bump metallization (UBM) layers made with multi-metal stack including an adhesion layer, barrier layer, and seed or wetting layer. The adhesion layer can be Ti, titanium nitride (TiN), titanium tungsten (TiW), Al, or chromium (Cr). The barrier layer is formed over the adhesion layer and can be made of Ni, nickel vanadium (NiV), platinum (Pt), palladium (Pd), TiW, or chromium copper (CrCu). The barrier layer inhibits the diffusion of Cu into semiconductor die **122**. The seed layer can be Cu, Ni, NiV, Au, or Al. The seed layer is formed over the barrier layer. UBM **130**-**132** provides a low resistive interconnect, as well as a barrier to solder diffusion and seed layer for solder wettability.

[0043] In FIG. **3***c*, a plurality of vias is formed through semiconductor wafer **120** using deep reactive ion etching (DRIE), laser drilling, or mechanical drilling process. The vias are filled with Al, Cu, Sn, Ni, Au, Ag, titanium (Ti), W, poly-silicon, or other suitable electrically conductive material using PVD, CVD, electrolytic plating, electroless plating process, or other suitable metal deposition process to form conductive TSV **134**. Conductive layers **130** and **132** are electrically connected by TSV **134**.

[0044] In FIG. **3***d*, a semiconductor die or package **140** is mounted to the top surface of WLCSP **126** in a flipchip arrangement with bumps **142** electrically connected to conductive layer **130***b*. Semiconductor die **140** includes an active surface containing analog or digital circuits implemented as active devices, passive devices, conductive layers, and dielectric layers formed within the die and electrically interconnected according to the electrical design and function of the die. For example, the circuit may include one or more transistors, diodes, and other circuit elements formed within its active surface to implement analog circuits or digital circuits, such as DSP, ASIC, memory, or other signal processing circuit. Semiconductor die **140** may also contain IPDS, such as inductors, capacitors, and resistors, for RF signal processing. An underfill material **144**, such as epoxy resin, is deposited under semiconductor die **140**.

[0045] An electrically conductive bump material is deposited over conductive layer **132***b* using an evaporation, electrolytic plating, electroless plating, ball drop, or screen printing process. The bump material can be Al, Sn, Ni, Au, Ag, Pb, Bi, Cu, solder, and combinations thereof, with an optional flux solution. For example, the bump material can be eutectic Sn/Pb, high-lead solder, or lead-free solder. The bump material is bonded to conductive layer **132***b* using a suitable attachment or bonding process. In one embodiment, the bump material is reflowed by heating the material above its melting point to form spherical balls or bumps **146**. In some applications, bumps **146** are reflowed a second time to improve electrical contact to conductive layer **132***b*. The bumps can also be compression bonded to conductive layer **132***b*. Bumps **146** represent one type of interconnect structure that can be formed over conductive layer **132***b*. The interconnect structure can also use bond wires, conductive paste, stud bump, micro bump, or other electrical interconnect.

[0046] In FIG. **3***e*, an electrically conductive bump material is deposited over conductive layer **130***a* using an evaporation, electrolytic plating, electroless plating, ball drop, or screen printing process. The bump material can be Al, Sn, Ni, Au, Ag, Pb, Bi, Cu, solder, and combinations thereof, with an optional flux solution. For example, the bump material can be eutectic Sn/Pb, high-lead solder, or lead-free solder. The bump material is bonded to conductive layer **130***a* using a suitable attachment or bonding process. In one embodiment, the bump material is reflowed by heating the material above its melting point to form spherical balls or bumps **148**. In some applications, bumps **148** are reflowed a second time to improve electrical contact to conductive layer **130***a*. The bumps can also be compression bonded to conductive layer **130***a*. Bumps **148** represent one type of interconnect structure that can be formed over conductive layer **130***a*. The intercon-

nect structure can also use bond wires, conductive paste, stud bump, micro bump, or other electrical interconnect.

[0047] In FIG. **3***f*, a semiconductor die or package **150** is mounted over semiconductor die **140**. Semiconductor die **150** includes an active surface containing analog or digital circuits implemented as active devices, passive devices, conductive layers, and dielectric layers formed within the die and electrically interconnected according to the electrical design and function of the die. For example, the circuit may include one or more transistors, diodes, and other circuit elements formed within its active surface to implement analog circuits or digital circuits, such as DSP, ASIC, memory, or other signal processing circuit. Semiconductor die **150** may also contain IPDS, such as inductors, capacitors, and resistors, for RF signal processing. In one embodiment, semiconductor die **150** is a BGA, WLCSP, or other semiconductor package or component. Contact pads **152** on semiconductor die **150** are electrically connected to bumps **148**, conductive layer **130***a*, TSVs **134**, and conductive layer **132***a*.

[0048] Semiconductor die **140** and **150** stacked over WLCSP **126** constitute a PoP structure. Semiconductor wafer **120** is singulated with a saw blade or laser cutting tool into individual PoP structures. Conductive TSV **134** and bumps **142**, **146**, and **148** provide vertical, z-direction interconnect between the semiconductor devices of the PoP structure. Accordingly, the active and passive devices within semiconductor die **122**, **140**, and **150** are electrically connected through conductive layers **130** and **132**, TSV **134**, and bumps **142**, **146**, and **148**.

[0049] FIGS. **4***a*-**4***b* show another PoP structure with a flip-chip die electrically interconnected through the TSV in the WLCSP. Continuing with the structure described up to FIG. **3***d*, an encapsulant or molding compound **154** is deposited over WLSCP **126** and semiconductor die **140** using a paste printing, compressive molding, transfer molding, liquid encapsulant molding, vacuum lamination, spin coating, or other suitable applicator, as shown in FIG. **4***a*. Encapsulant **154** can be polymer composite material, such as epoxy resin with filler, epoxy acrylate with filler, or polymer with proper filler. Encapsulant **154** is non-conductive and environmentally protects the semiconductor device from external elements and contaminants.

[0050] In FIG. **4***b*, an electrically conductive bump material is deposited over conductive layer **130***a* using an evaporation, electrolytic plating, electroless plating, ball drop, or screen printing process. The bump material can be Al, Sn, Ni, Au, Ag, Pb, Bi, Cu, solder, and combinations thereof, with an optional flux solution. For example, the bump material can be eutectic Sn/Pb, high-lead solder, or lead-free solder. The bump material is bonded to conductive layer **130***a* using a suitable attachment or bonding process. In one embodiment, the bump material is reflowed by heating the material above its melting point to form spherical balls or bumps **156**. In some applications, bumps **156** are reflowed a second time to improve electrical contact to conductive layer **130***a*. The bumps can also be compression bonded to conductive layer **130***a*. Bumps **156** represent one type of interconnect structure that can be formed over conductive layer **130***a*. The interconnect structure can also use bond wires, conductive paste, stud bump, micro bump, or other electrical interconnect.

[0051] A semiconductor die or package **158** is mounted over semiconductor die **140**. Semiconductor die **158** includes an active surface containing analog or digital circuits implemented as active devices, passive devices, conductive layers, and dielectric layers formed within the die and electrically interconnected according to the electrical design and function of the die. For example, the circuit may include one or more transistors, diodes, and other circuit elements formed within its active surface to implement analog circuits or digital circuits, such as DSP, ASIC, memory, or other signal processing circuit. Semiconductor die **158** may also contain IPDS, such as inductors, capacitors, and resistors, for RF signal processing. In one embodiment, semiconductor die **158** is a BGA, WLCSP, or other semiconductor package or component. Contact pads **160** on semiconductor die **158** are electrically connected to bumps **156**, conductive layer **130***a*, TSVs **134**, and conductive layer **132***a*.

[0052] Semiconductor die **140** and **158** stacked over WLCSP **126** constitute a PoP structure. Semiconductor wafer **120** is singulated with a saw blade or laser cutting tool into individual PoP structures. Conductive TSV **134** and bumps **142**, **146**, and **156** provide vertical, z-direction interconnect between the semiconductor devices in the PoP structure. Accordingly, the active and passive devices within semiconductor die **122**, **140**, and **158** are electrically connected through conductive layers **130** and **132**, TSV **134**, and bumps **142**, **146**, and **156**.

[0053] FIGS. **5***a*-**5***b* show another PoP structure with a wire bond die electrically interconnected through the TSV in the WLCSP. Continuing with the structure described up to FIG. **3***c*, a semiconductor die or package **170** is mounted to the top surface of WLCSP **126** using die attach adhesive **172**, as shown in FIG. **5***a*. Semiconductor die **170** includes an active surface containing analog or digital circuits implemented as active devices, passive devices, conductive layers, and dielectric layers formed within the die and electrically interconnected according to the electrical design and function of the die. For example, the circuit may include one or more transistors, diodes, and other circuit elements formed within its active surface to implement analog circuits or digital circuits, such as DSP, ASIC, memory, or other signal processing circuit. Semiconductor die **170** may also contain IPDS, such as inductors, capacitors, and resistors, for RF signal processing. Semiconductor die **170** is electrically connected to conductive layer **130***b* using bond wires **174**.

[0054] An encapsulant or molding compound **176** is deposited over WLSCP **126** and semiconductor die **170** using a paste printing, compressive molding, transfer molding, liquid encapsulant molding, vacuum lamination, spin coating, or other suitable applicator. Encapsulant **176** can be polymer composite material, such as epoxy resin with filler, epoxy acrylate with filler, or polymer with proper filler. Encapsulant **176** is non-conductive and environmentally protects the semiconductor device from external elements and contaminants.

[0055] An electrically conductive bump material is deposited over conductive layer **132***b* using an evaporation, electrolytic plating, electroless plating, ball drop, or screen printing process. The bump material can be Al, Sn, Ni, Au, Ag, Pb, Bi, Cu, solder, and combinations thereof, with an optional flux solution. For example, the bump material can be eutectic Sn/Pb, high-lead solder, or lead-free solder. The bump material is bonded to conductive layer **132***b* using a suitable attachment or bonding process. In one embodiment, the bump material is reflowed by heating the material above its melting point to form spherical balls or bumps **178**. In some applications, bumps **178** are reflowed a second time to improve electrical contact to conductive layer **132***b*. The bumps can also be compression bonded to conductive layer **132***b*. Bumps

178 represent one type of interconnect structure that can be formed over conductive layer **132***b*. The interconnect structure can also use bond wires, conductive paste, stud bump, micro bump, or other electrical interconnect.

[0056] In FIG. **5***b*, an electrically conductive bump material is deposited over conductive layer **130***a* using an evaporation, electrolytic plating, electroless plating, ball drop, or screen printing process. The bump material can be Al, Sn, Ni, Au, Ag, Pb, Bi, Cu, solder, and combinations thereof, with an optional flux solution. For example, the bump material can be eutectic Sn/Pb, high-lead solder, or lead-free solder. The bump material is bonded to conductive layer **130***a* using a suitable attachment or bonding process. In one embodiment, the bump material is reflowed by heating the material above its melting point to form spherical balls or bumps **180**. In some applications, bumps **180** are reflowed a second time to improve electrical contact to conductive layer **130***a*. The bumps can also be compression bonded to conductive layer **130***a*. Bumps **180** represent one type of interconnect structure that can be formed over conductive layer **130***a*. The interconnect structure can also use bond wires, conductive paste, stud bump, micro bump, or other electrical interconnect.

[0057] A semiconductor die or package **182** is mounted over semiconductor die **170**. Semiconductor die **182** includes an active surface containing analog or digital circuits implemented as active devices, passive devices, conductive layers, and dielectric layers formed within the die and electrically interconnected according to the electrical design and function of the die. For example, the circuit may include one or more transistors, diodes, and other circuit elements formed within its active surface to implement analog circuits or digital circuits, such as DSP, ASIC, memory, or other signal processing circuit. Semiconductor die **182** may also contain IPDS, such as inductors, capacitors, and resistors, for RF signal processing. In one embodiment, semiconductor die **182** is a BGA, WLCSP, or other semiconductor package or component. Contact pads **184** on semiconductor die **182** are electrically connected to bumps **180**, conductive layer **130***a*, TSVs **134**, and conductive layer **132***a*.

[0058] Semiconductor die **170** and **182** stacked over WLCSP **126** constitute a PoP structure. Semiconductor wafer **120** is singulated with a saw blade or laser cutting tool into individual PoP structures. Conductive TSV **134** and bumps **178** and **180** and bond wires **174** provide vertical, z-direction interconnect between the semiconductor devices in the PoP structure. Accordingly, the active and passive devices within semiconductor die **122**, **170**, and **182** are electrically connected through conductive layers **130** and **132**, TSV **134**, bond wires **174**, and bumps **178** and **180**.

[0059] FIGS. **6***a*-**6***b* show another PoP structure with stacked flipchip die and wire bond die electrically interconnected through the TSV in the WLCSP. Continuing with the structure described up to FIG. **3***c*, a semiconductor die or package **190** is mounted to the top surface of WLCSP **126** in a flipchip arrangement with bumps **192** electrically connected to conductive layer **130***b*, as shown in FIG. **6***a*. Semiconductor die **190** includes an active surface containing analog or digital circuits implemented as active devices, passive devices, conductive layers, and dielectric layers formed within the die and electrically interconnected according to the electrical design and function of the die. For example, the circuit may include one or more transistors, diodes, and other circuit elements formed within its active surface to implement analog circuits or digital circuits, such as DSP, ASIC, memory, or other signal processing circuit. Semiconductor die **190** may also contain IPDS, such as inductors, capacitors, and resistors, for RF signal processing.

[0060] A semiconductor die or package **194** is mounted to the top surface of semiconductor die **190** using die attach adhesive **196**. Semiconductor die **194** includes an active surface containing analog or digital circuits implemented as active devices, passive devices, conductive layers, and dielectric layers formed within the die and electrically interconnected according to the electrical design and function of the die. For example, the circuit may include one or more transistors, diodes, and other circuit elements formed within its active surface to implement analog circuits or digital circuits, such as DSP, ASIC, memory, or other signal processing circuit. Semiconductor die **194** may also contain IPDS, such as inductors, capacitors, and resistors, for RF signal processing. Semiconductor die **194** is electrically connected to conductive layer **130***b* using bond wires **198**.

[0061] An encapsulant or molding compound **200** is deposited over WLSCP **126** and semiconductor die **190** and **194** using a paste printing, compressive molding, transfer molding, liquid encapsulant molding, vacuum lamination, spin coating, or other suitable applicator. Encapsulant **200** can be polymer composite material, such as epoxy resin with filler, epoxy acrylate with filler, or polymer with proper filler. Encapsulant **200** is non-conductive and environmentally protects the semiconductor device from external elements and contaminants.

[0062] An electrically conductive bump material is deposited over conductive layer **132***b* using an evaporation, electrolytic plating, electroless plating, ball drop, or screen printing process. The bump material can be Al, Sn, Ni, Au, Ag, Pb, Bi, Cu, solder, and combinations thereof, with an optional flux solution. For example, the bump material can be eutectic Sn/Pb, high-lead solder, or lead-free solder. The bump material is bonded to conductive layer **132***b* using a suitable attachment or bonding process. In one embodiment, the bump material is reflowed by heating the material above its melting point to form spherical balls or bumps **202**. In some applications, bumps **202** are reflowed a second time to improve electrical contact to conductive layer **132***b*. The bumps can also be compression bonded to conductive layer **132***b*. Bumps **202** represent one type of interconnect structure that can be formed over conductive layer **132***b*. The interconnect structure can also use bond wires, conductive paste, stud bump, micro bump, or other electrical interconnect.

[0063] In FIG. **6***b*, an electrically conductive bump material is deposited over conductive layer **130***a* using an evaporation, electrolytic plating, electroless plating, ball drop, or screen printing process. The bump material can be Al, Sn, Ni, Au, Ag, Pb, Bi, Cu, solder, and combinations thereof, with an optional flux solution. For example, the bump material can be eutectic Sn/Pb, high-lead solder, or lead-free solder. The bump material is bonded to conductive layer **130***a* using a suitable attachment or bonding process. In one embodiment, the bump material is reflowed by heating the material above its melting point to form spherical balls or bumps **204**. In some applications, bumps **204** are reflowed a second time to improve electrical contact to conductive layer **130***a*. The bumps can also be compression bonded to conductive layer **130***a*. Bumps **204** represent one type of interconnect structure that can be formed over conductive layer **130***a*. The interconnect structure can also use bond wires, conductive paste, stud bump, micro bump, or other electrical interconnect.

[0064] A semiconductor die or package **206** is mounted over semiconductor die **190** and **194**. Semiconductor die **206** includes an active surface containing analog or digital circuits implemented as active devices, passive devices, conductive layers, and dielectric layers formed within the die and electrically interconnected according to the electrical design and function of the die. For example, the circuit may include one or more transistors, diodes, and other circuit elements formed within its active surface to implement analog circuits or digital circuits, such as DSP, ASIC, memory, or other signal processing circuit. Semiconductor die **206** may also contain IPDS, such as inductors, capacitors, and resistors, for RF signal processing. In one embodiment, semiconductor die **206** is a BGA, WLCSP, or other semiconductor package or component. Contact pads **208** on semiconductor die **206** are electrically connected to bumps **204**, conductive layer **130***a*, TSVs **134**, and conductive layer **132***a*.

[0065] Semiconductor die **190**, **194**, and **206** stacked over WLCSP **126** constitute a PoP structure. Semiconductor wafer **120** is singulated with a saw blade or laser cutting tool into individual PoP structures. Conductive TSV **134** and bumps **202** and **204** and bond wires **198** provide vertical, z-direction interconnect between the semiconductor devices of the PoP structure. Accordingly, the active and passive devices within semiconductor die **122**, **190**, **194**, and **206** are electrically connected through conductive layers **130** and **132**, TSV **134**, bond wires **198**, and bumps **202** and **204**.

[0066] FIGS. **7***a*-**7***b* show another PoP structure with bump transposer electrically interconnected through the TSV in the WLCSP. Continuing with the structure described up to FIG. **3***c*, a semiconductor die or package **210** is mounted to the top surface of WLCSP **126** in a flipchip arrangement with bumps **212** electrically connected to conductive layer **130***b*, as shown in FIG. **7***a*. Semiconductor die **210** includes an active surface containing analog or digital circuits implemented as active devices, passive devices, conductive layers, and dielectric layers formed within the die and electrically interconnected according to the electrical design and function of the die. For example, the circuit may include one or more transistors, diodes, and other circuit elements formed within its active surface to implement analog circuits or digital circuits, such as DSP, ASIC, memory, or other signal processing circuit. Semiconductor die **210** may also contain IPDS, such as inductors, capacitors, and resistors, for RF signal processing.

[0067] An electrically conductive bump material is deposited over conductive layer **130***a* using an evaporation, electrolytic plating, electroless plating, ball drop, or screen printing process. The bump material can be Al, Sn, Ni, Au, Ag, Pb, Bi, Cu, solder, and combinations thereof, with an optional flux solution. For example, the bump material can be eutectic Sn/Pb, high-lead solder, or lead-free solder. The bump material is bonded to conductive layer **130***a* using a suitable attachment or bonding process. In one embodiment, the bump material is reflowed by heating the material above its melting point to form spherical balls or bumps **214**. In some applications, bumps **214** are reflowed a second time to improve electrical contact to conductive layer **130***a*. The bumps can also be compression bonded to conductive layer **130***a*. Bumps **214** represent one type of interconnect structure that can be formed over conductive layer **130***a*. The interconnect structure can also use bond wires, conductive paste, stud bump, micro bump, or other electrical interconnect.

[0068] An encapsulant or molding compound **216** is deposited over WLSCP **126** and semiconductor die **210** using a paste printing, compressive molding, transfer molding, liquid encapsulant molding, vacuum lamination, spin coating, or other suitable applicator. Encapsulant **216** can be polymer composite material, such as epoxy resin with filler, epoxy acrylate with filler, or polymer with proper filler. Encapsulant **216** is non-conductive and environmentally protects the semiconductor device from external elements and contaminants. A portion of the top surface of encapsulant **216** is removed by an etching process to expose bumps **214**.

[0069] An electrically conductive bump material is deposited over conductive layer **132***b* using an evaporation, electrolytic plating, electroless plating, ball drop, or screen printing process. The bump material can be Al, Sn, Ni, Au, Ag, Pb, Bi, Cu, solder, and combinations thereof, with an optional flux solution. For example, the bump material can be eutectic Sn/Pb, high-lead solder, or lead-free solder. The bump material is bonded to conductive layer **132***b* using a suitable attachment or bonding process. In one embodiment, the bump material is reflowed by heating the material above its melting point to form spherical balls or bumps **218**. In some applications, bumps **218** are reflowed a second time to improve electrical contact to conductive layer **132***b*. The bumps can also be compression bonded to conductive layer **132***b*. Bumps **218** represent one type of interconnect structure that can be formed over conductive layer **132***b*. The interconnect structure can also use bond wires, conductive paste, stud bump, micro bump, or other electrical interconnect.

[0070] In FIG. **7***b*, an electrically conductive bump material is deposited over bumps **214** using an evaporation, electrolytic plating, electroless plating, ball drop, or screen printing process. The bump material can be Al, Sn, Ni, Au, Ag, Pb, Bi, Cu, solder, and combinations thereof, with an optional flux solution. For example, the bump material can be eutectic Sn/Pb, high-lead solder, or lead-free solder. The bump material is bonded to bumps **214** using a suitable attachment or bonding process. In one embodiment, the bump material is reflowed by heating the material above its melting point to form spherical balls or bumps **220**. In some applications, bumps **220** are reflowed a second time to improve electrical contact to bumps **214**. The bumps can also be compression bonded to bumps **214**. Bumps **220** represent one type of interconnect structure that can be formed over bumps **214**. The interconnect structure can also use bond wires, conductive paste, stud bump, micro bump, or other electrical interconnect.

[0071] A semiconductor die or package **222** is mounted over semiconductor die **210**. Semiconductor die **222** includes an active surface containing analog or digital circuits implemented as active devices, passive devices, conductive layers, and dielectric layers formed within the die and electrically interconnected according to the electrical design and function of the die. For example, the circuit may include one or more transistors, diodes, and other circuit elements formed within its active surface to implement analog circuits or digital circuits, such as DSP, ASIC, memory, or other signal processing circuit. Semiconductor die **222** may also contain IPDS, such as inductors, capacitors, and resistors, for RF signal processing. In one embodiment, semiconductor die **222** is a BGA, WLCSP, or other semiconductor package or component. Contact pads **224** on semiconductor die **222** are electrically connected to bumps **214** and **220**, conductive layer **130***a*, TSVs **134**, and conductive layer **132***a*.

[0072] Semiconductor die **210** and **222** stacked over WLCSP **126** constitute a PoP structure. Semiconductor wafer

120 is singulated with a saw blade or laser cutting tool into individual PoP structures. Conductive TSV **134** and bumps **214**, **218**, and **220** provide vertical, z-direction interconnect between the semiconductor devices in the PoP structure. Accordingly, the active and passive devices within semiconductor die **122**, **210**, and **222** are electrically connected through conductive layers **130** and **132**, TSV **134**, and bumps **214**, **218**, and **220**.

[0073] FIGS. **8***a*-**8***b* show another PoP structure with flipchip die and wire bond die and bump transposer electrically interconnected through the TSV in the WLCSP. Continuing with the structure described up to FIG. **3***c*, a semiconductor die or package **230** is mounted to the top surface of WLCSP **126** in a flipchip arrangement with bumps **232** electrically connected to conductive layer **130***b*, as shown in FIG. **8***a*. Semiconductor die **230** includes an active surface containing analog or digital circuits implemented as active devices, passive devices, conductive layers, and dielectric layers formed within the die and electrically interconnected according to the electrical design and function of the die. For example, the circuit may include one or more transistors, diodes, and other circuit elements formed within its active surface to implement analog circuits or digital circuits, such as DSP, ASIC, memory, or other signal processing circuit. Semiconductor die **230** may also contain IPDS, such as inductors, capacitors, and resistors, for RF signal processing.

[0074] A semiconductor die or package **234** is mounted to the top surface of semiconductor die **230** using die attach adhesive **236**. Semiconductor die **234** includes an active surface containing analog or digital circuits implemented as active devices, passive devices, conductive layers, and dielectric layers formed within the die and electrically interconnected according to the electrical design and function of the die. For example, the circuit may include one or more transistors, diodes, and other circuit elements formed within its active surface to implement analog circuits or digital circuits, such as DSP, ASIC, memory, or other signal processing circuit. Semiconductor die **234** may also contain IPDS, such as inductors, capacitors, and resistors, for RF signal processing. Semiconductor die **234** is electrically connected to conductive layer **130***b* using bond wires **238**.

[0075] A semiconductor die or package **240** is mounted to the top surface of semiconductor die **234** in a flipchip arrangement with bumps **242** electrically connected to contact pads on semiconductor die **234**. Semiconductor die **240** includes an active surface containing analog or digital circuits implemented as active devices, passive devices, conductive layers, and dielectric layers formed within the die and electrically interconnected according to the electrical design and function of the die. For example, the circuit may include one or more transistors, diodes, and other circuit elements formed within its active surface to implement analog circuits or digital circuits, such as DSP, ASIC, memory, or other signal processing circuit. Semiconductor die **240** may also contain IPDS, such as inductors, capacitors, and resistors, for RF signal processing.

[0076] An electrically conductive bump material is deposited over conductive layer **130***a* using an evaporation, electrolytic plating, electroless plating, ball drop, or screen printing process. The bump material can be Al, Sn, Ni, Au, Ag, Pb, Bi, Cu, solder, and combinations thereof, with an optional flux solution. For example, the bump material can be eutectic Sn/Pb, high-lead solder, or lead-free solder. The bump material is bonded to conductive layer **130***a* using a suitable attachment or bonding process. In one embodiment, the bump material is reflowed by heating the material above its melting point to form spherical balls or bumps **244**. In some applications, bumps **244** are reflowed a second time to improve electrical contact to conductive layer **130***a*. The bumps can also be compression bonded to conductive layer **130***a*. Bumps **244** represent one type of interconnect structure that can be formed over conductive layer **130***a*. The interconnect structure can also use bond wires, conductive paste, stud bump, micro bump, or other electrical interconnect.

[0077] An encapsulant or molding compound **246** is deposited over WLSCP **126**, semiconductor die **230**, **234**, and **240**, and bumps **244** using a paste printing, compressive molding, transfer molding, liquid encapsulant molding, vacuum lamination, spin coating, or other suitable applicator. Encapsulant **246** can be polymer composite material, such as epoxy resin with filler, epoxy acrylate with filler, or polymer with proper filler. Encapsulant **246** is non-conductive and environmentally protects the semiconductor device from external elements and contaminants. A portion of encapsulant **246** is removed by an etching process to expose bumps **244** and a back surface of semiconductor die **240**.

[0078] An electrically conductive bump material is deposited over conductive layer **132***b* using an evaporation, electrolytic plating, electroless plating, ball drop, or screen printing process. The bump material can be Al, Sn, Ni, Au, Ag, Pb, Bi, Cu, solder, and combinations thereof, with an optional flux solution. For example, the bump material can be eutectic Sn/Pb, high-lead solder, or lead-free solder. The bump material is bonded to conductive layer **132***b* using a suitable attachment or bonding process. In one embodiment, the bump material is reflowed by heating the material above its melting point to form spherical balls or bumps **248**. In some applications, bumps **248** are reflowed a second time to improve electrical contact to conductive layer **132***b*. The bumps can also be compression bonded to conductive layer **132***b*. Bumps **248** represent one type of interconnect structure that can be formed over conductive layer **132***b*. The interconnect structure can also use bond wires, conductive paste, stud bump, micro bump, or other electrical interconnect.

[0079] In FIG. **8***b*, an electrically conductive bump material is deposited over bumps **244** using an evaporation, electrolytic plating, electroless plating, ball drop, or screen printing process. The bump material can be Al, Sn, Ni, Au, Ag, Pb, Bi, Cu, solder, and combinations thereof, with an optional flux solution. For example, the bump material can be eutectic Sn/Pb, high-lead solder, or lead-free solder. The bump material is bonded to bumps **244** using a suitable attachment or bonding process. In one embodiment, the bump material is reflowed by heating the material above its melting point to form spherical balls or bumps **250**. In some applications, bumps **250** are reflowed a second time to improve electrical contact to bumps **244**. The bumps can also be compression bonded to bumps **244**.

[0080] A semiconductor die or package **252** is mounted over semiconductor die **230**, **234**, and **240**. Semiconductor die **252** includes an active surface containing analog or digital

circuits implemented as active devices, passive devices, conductive layers, and dielectric layers formed within the die and electrically interconnected according to the electrical design and function of the die. For example, the circuit may include one or more transistors, diodes, and other circuit elements formed within its active surface to implement analog circuits or digital circuits, such as DSP, ASIC, memory, or other signal processing circuit. Semiconductor die **252** may also contain IPDS, such as inductors, capacitors, and resistors, for RF signal processing. In one embodiment, semiconductor die **252** is a BGA, WLCSP, or other semiconductor package or component. Contact pads **254** on semiconductor die **252** are electrically connected to bumps **244** and **250**, conductive layer **130***a,* TSVs **134**, and conductive layer **132***a.*

[0081] Semiconductor die **230**, **234**, **240**, and **252** stacked over WLCSP **126** constitute a PoP structure. Semiconductor wafer **120** is singulated with a saw blade or laser cutting tool into individual PoP structures. Conductive TSV **134** and bumps **232**, **242**, **244**, **248**, and **250** and bond wires **238** provide vertical, z-direction interconnect between the semiconductor devices in the PoP structure. Accordingly, the active and passive devices within semiconductor die **122**, **230**, **234**, **240**, and **252** are electrically connected through conductive layers **130** and **132**, TSV **134**, and bumps **232**, **242**, **244**, **248**, and **250**, and bond wires **238**.

[0082] FIGS. **9***a*-**9***b* show another PoP structure with conductive pillar transposer electrically interconnected through the TSV in the WLCSP. Continuing with the structure described up to FIG. **3***c*, a semiconductor die or package **260** is mounted to the top surface of WLCSP **126** in a flipchip arrangement with bumps **262** electrically connected to conductive layer **130***b,* as shown in FIG. **9***a*. Semiconductor die **260** includes an active surface containing analog or digital circuits implemented as active devices, passive devices, conductive layers, and dielectric layers formed within the die and electrically interconnected according to the electrical design and function of the die. For example, the circuit may include one or more transistors, diodes, and other circuit elements formed within its active surface to implement analog circuits or digital circuits, such as DSP, ASIC, memory, or other signal processing circuit. Semiconductor die **260** may also contain IPDS, such as inductors, capacitors, and resistors, for RF signal processing. An underfill material **264**, such as epoxy resin, is deposited under semiconductor die **260**.

[0083] An encapsulant or molding compound **268** is deposited over WLCSP **126** and semiconductor die **260** using a paste printing, compressive molding, transfer molding, liquid encapsulant molding, vacuum lamination, spin coating, or other suitable applicator. Encapsulant **268** can be polymer composite material, such as epoxy resin with filler, epoxy acrylate with filler, or polymer with proper filler. Encapsulant **268** is non-conductive and environmentally protects the semiconductor device from external elements and contaminants.

[0084] A plurality of vias is formed in encapsulant **268** over contact pads **130***a* using laser drilling, mechanical drilling, or DRIE. The vias are filled with Cu, Al, tungsten (W), Au, solder, or other suitable electrically conductive material using electrolytic plating, electroless plating process, or other suitable metal deposition process to form conductive pillars **266**. Conductive pillars **266** have a height ranging from 2-120 micrometers (μm). In another embodiment, conductive pillars **266** can be formed as stud bumps or stacked bumps.

[0085] An electrically conductive bump material is deposited over conductive layer **132***b* using an evaporation, electrolytic plating, electroless plating, ball drop, or screen printing process. The bump material can be Al, Sn, Ni, Au, Ag, Pb, Bi, Cu, solder, and combinations thereof, with an optional flux solution. For example, the bump material can be eutectic Sn/Pb, high-lead solder, or lead-free solder. The bump material is bonded to conductive layer **132***b* using a suitable attachment or bonding process. In one embodiment, the bump material is reflowed by heating the material above its melting point to form spherical balls or bumps **270**. In some applications, bumps **270** are reflowed a second time to improve electrical contact to conductive layer **132***b.* The bumps can also be compression bonded to conductive layer **132***b.* Bumps **270** represent one type of interconnect structure that can be formed over conductive layer **132***b.* The interconnect structure can also use bond wires, conductive paste, stud bump, micro bump, or other electrical interconnect.

[0086] In FIG. **9***b*, an electrically conductive bump material is deposited over conductive pillars **266** using an evaporation, electrolytic plating, electroless plating, ball drop, or screen printing process. The bump material can be Al, Sn, Ni, Au, Ag, Pb, Bi, Cu, solder, and combinations thereof, with an optional flux solution. For example, the bump material can be eutectic Sn/Pb, high-lead solder, or lead-free solder. The bump material is bonded to conductive pillars **266** using a suitable attachment or bonding process. In one embodiment, the bump material is reflowed by heating the material above its melting point to form spherical balls or bumps **272**. In some applications, bumps **272** are reflowed a second time to improve electrical contact to conductive pillars **266**. The bumps can also be compression bonded to conductive pillars **266**. Bumps **272** represent one type of interconnect structure that can be formed over conductive pillars **266**. The interconnect structure can also use bond wires, conductive paste, stud bump, micro bump, or other electrical interconnect.

[0087] A semiconductor die or package **274** is mounted over semiconductor die **260**. Semiconductor die **274** includes an active surface containing analog or digital circuits implemented as active devices, passive devices, conductive layers, and dielectric layers formed within the die and electrically interconnected according to the electrical design and function of the die. For example, the circuit may include one or more transistors, diodes, and other circuit elements formed within its active surface to implement analog circuits or digital circuits, such as DSP, ASIC, memory, or other signal processing circuit. Semiconductor die **274** may also contain IPDS, such as inductors, capacitors, and resistors, for RF signal processing. In one embodiment, semiconductor die **274** is a BGA, WLCSP, or other semiconductor package or component. Contact pads **276** on semiconductor die **274** are electrically connected to bumps **272**, conductive pillars **266**, conductive layer **130***a,* TSVs **134**, and conductive layer **132***a.*

[0088] Semiconductor die **260** and **274** stacked over WLCSP **126** constitute a PoP structure. Semiconductor wafer **120** is singulated with a saw blade or laser cutting tool into individual PoP structures. Conductive TSV **134** and bumps **262**, **270**, and **272** and conductive pillars **266** provide vertical, z-direction interconnect between the semiconductor devices of the PoP structure. Accordingly, the active and passive devices within semiconductor die **122**, **260**, and **274** are electrically connected through conductive layers **130** and **132**, TSV **134**, and bumps **262**, **270**, and **274**, and conductive pillars **266**.

[0089] While one or more embodiments of the present invention have been illustrated in detail, the skilled artisan

will appreciate that modifications and adaptations to those embodiments may be made without departing from the scope of the present invention as set forth in the following claims.

What is claimed:

1. A method of making a semiconductor device, comprising:

providing a semiconductor wafer having a plurality of semiconductor die;

forming first and second conductive layers over first and second opposing surfaces of the semiconductor die, respectively, each semiconductor die constituting a wafer level chip scale package (WLCSP);

forming a conductive through silicon via (TSV) through the WLCSP;

mounting a first semiconductor component to the WLCSP;

electrically connecting the first semiconductor component to the first conductive layer;

forming a first bump over the first conductive layer;

mounting a second semiconductor component to the first bump, the second semiconductor component being electrically connected to the first semiconductor component and WLCSP through the first bump and TSV; and

singulating the semiconductor wafer.

2. The method of claim **1**, further including depositing an encapsulant over the first bump and first semiconductor component.

3. The method of claim **2**, further including removing a portion of the encapsulant to expose the first bump.

4. The method of claim **1**, wherein the first semiconductor component is electrically connected to the first conductive layer by bond wire or bump.

5. The method of claim **1**, further including forming a second bump over the second conductive layer.

6. The method of claim **1**, further including mounting a third semiconductor component to the first semiconductor component.

7. The method of claim **6**, further including mounting a fourth semiconductor component to the third semiconductor component.

8. A method of making a semiconductor device, comprising:

providing a semiconductor wafer having a plurality of semiconductor die;

forming a first conductive layer over a first surface of the semiconductor die, each semiconductor die constituting a wafer level chip scale package (WLCSP);

forming a conductive through silicon via (TSV) through the WLCSP;

mounting a first semiconductor component to the WLCSP;

forming a first interconnect structure over the first conductive layer; and

mounting a second semiconductor component to the first interconnect structure, the second semiconductor component being electrically connected to the first semiconductor component and WLCSP through the first interconnect structure and TSV.

9. The method of claim **8**, further including depositing an encapsulant over the first interconnect structure and first semiconductor component.

10. The method of claim **9**, further including removing a portion of the encapsulant to expose the first interconnect structure.

11. The method of claim **8**, wherein the first interconnect structure includes a bump or pillar.

12. The method of claim **8**, further including electrically connecting the first semiconductor component to the first conductive layer by bond wire or bump.

13. The method of claim **8**, further including:

forming a second conductive layer over a second surface of the semiconductor die opposite the first surface of the semiconductor die; and

forming a second interconnect structure over the second conductive layer.

14. The method of claim **8**, further including:

mounting a third semiconductor component to the first semiconductor component; and

mounting a fourth semiconductor component to the third semiconductor component.

15. A method of making a semiconductor device, comprising:

providing a wafer level chip scale package (WLCSP) having a first conductive layer formed over a first surface of the WLCSP;

forming a conductive through silicon via (TSV) through the WLCSP;

mounting a first semiconductor component to the WLCSP;

forming a first interconnect structure over the first conductive layer; and

mounting a second semiconductor component to the first interconnect structure, the second semiconductor component being electrically connected to the first semiconductor component and WLCSP through the first interconnect structure and TSV.

16. The method of claim **15**, further including depositing an encapsulant over the first interconnect structure and first semiconductor component.

17. The method of claim **16**, further including removing a portion of the encapsulant to expose the first interconnect structure.

18. The method of claim **15**, wherein the first interconnect structure includes a bump or pillar.

19. The method of claim **15**, further including:

forming a second conductive layer over a second surface of the WLCSP opposite the first surface of the WLCSP; and

forming a second interconnect structure over the second conductive layer.

20. The method of claim **15**, further including:

mounting a third semiconductor component to the first semiconductor component; and

mounting a fourth semiconductor component to the third semiconductor component.

21. A semiconductor device, comprising:

a wafer level chip scale package (WLCSP) having a first conductive layer formed over a first surface of the WLCSP;

a conductive through silicon via (TSV) formed through the WLCSP;

a first semiconductor component mounted to the WLCSP;

a first interconnect structure formed over the first conductive layer; and

a second semiconductor component mounted to the first interconnect structure, the second semiconductor component being electrically connected to the first semiconductor component and WLCSP through the first interconnect structure and TSV.

22. The semiconductor device of claim **21**, further including an encapsulant deposited over the first interconnect structure and first semiconductor component.

23. The semiconductor device of claim **21**, wherein the first interconnect structure includes a bump or pillar.

24. The semiconductor device of claim **21**, further including a third semiconductor component mounted to the first semiconductor component.

25. The semiconductor device of claim **24**, further including a fourth semiconductor component mounted to the third semiconductor component.

* * * * *