US008193604B2

(12) **United States Patent**
Lin et al.

(10) **Patent No.: US 8,193,604 B2**
(45) **Date of Patent: Jun. 5, 2012**

(54) **SEMICONDUCTOR PACKAGE WITH SEMICONDUCTOR CORE STRUCTURE AND METHOD OF FORMING THE SAME**

(75) Inventors: **Yaojian Lin**, Singapore (SG); **Jianmin Fang**, Singapore (SG); **Kang Chen**, Singapore (SG); **Haijing Cao**, Singapore (SG)

(73) Assignee: **STATS ChipPAC, Ltd.**, Singapore (SG)

(*) Notice: Subject to any disclaimer, the term of this patent is extended or adjusted under 35 U.S.C. 154(b) by 0 days.

(21) Appl. No.: **12/950,591**

(22) Filed: **Nov. 19, 2010**

(65) **Prior Publication Data**

US 2011/0068468 A1 Mar. 24, 2011

Related U.S. Application Data

(62) Division of application No. 12/329,778, filed on Dec. 8, 2008, now Pat. No. 7,858,441.

(51) **Int. Cl.**
H01L 27/08 (2006.01)

(52) **U.S. Cl.** **257/531**; 257/379; 257/380; 257/516; 257/528; 257/532; 257/536; 257/684; 257/698; 257/700

(58) **Field of Classification Search** 257/379, 257/380, 516, 528, 531, 532, 536, 684, 698, 257/700

See application file for complete search history.

(56) **References Cited**

U.S. PATENT DOCUMENTS

5,250,843 A 10/1993 Eichelberger
5,353,498 A 10/1994 Fillion et al.
5,841,193 A 11/1998 Eichelberger
6,495,912 B1 12/2002 Huang et al.
6,828,670 B2 * 12/2004 Hayama et al. 257/700
6,905,912 B2 6/2005 Maeda et al.
7,214,565 B2 5/2007 Sunohara
7,619,901 B2 11/2009 Eichelberger et al.
7,772,081 B2 * 8/2010 Lin et al. 438/393
2004/0262735 A1 12/2004 Higashi et al.
2005/0130368 A1 6/2005 Ooi et al.
2007/0096292 A1 * 5/2007 Machida 257/700
2008/0001285 A1 1/2008 Yang
2008/0099911 A1 5/2008 Machida
2008/0136004 A1 6/2008 Yang et al.
2009/0170242 A1 7/2009 Lin et al.
2009/0294899 A1 * 12/2009 Pagaila et al. 257/528
2009/0302435 A1 12/2009 Pagaila et al.
2010/0006994 A1 1/2010 Shim et al.
2010/0059876 A1 * 3/2010 Shimizu et al. 257/700

* cited by examiner

Primary Examiner — Bac Au
(74) *Attorney, Agent, or Firm* — Robert D. Atkins; Patent Law Group: Atkins & Associates, P.C.

(57) **ABSTRACT**

A semiconductor device includes an IPD structure, a first semiconductor die mounted to the IPD structure with a flip-chip interconnect, and a plurality of first conductive posts that are disposed adjacent to the first semiconductor die. The semiconductor device further includes a first molding compound that is disposed over the first conductive posts and first semiconductor die, a core structure bonded to the first conductive posts over the first semiconductor die, and a plurality of conductive TSVs disposed in the core structure. The semiconductor device further includes a plurality of second conductive posts that are disposed over the core structure, a second semiconductor die mounted over the core structure, and a second molding compound disposed over the second conductive posts and the second semiconductor die. The second semiconductor die is electrically connected to the core structure.

24 Claims, 19 Drawing Sheets

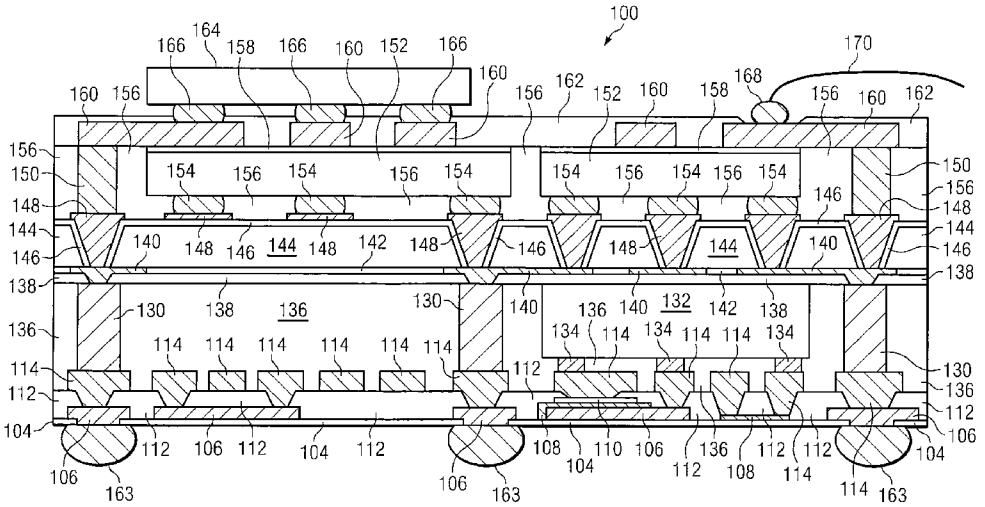

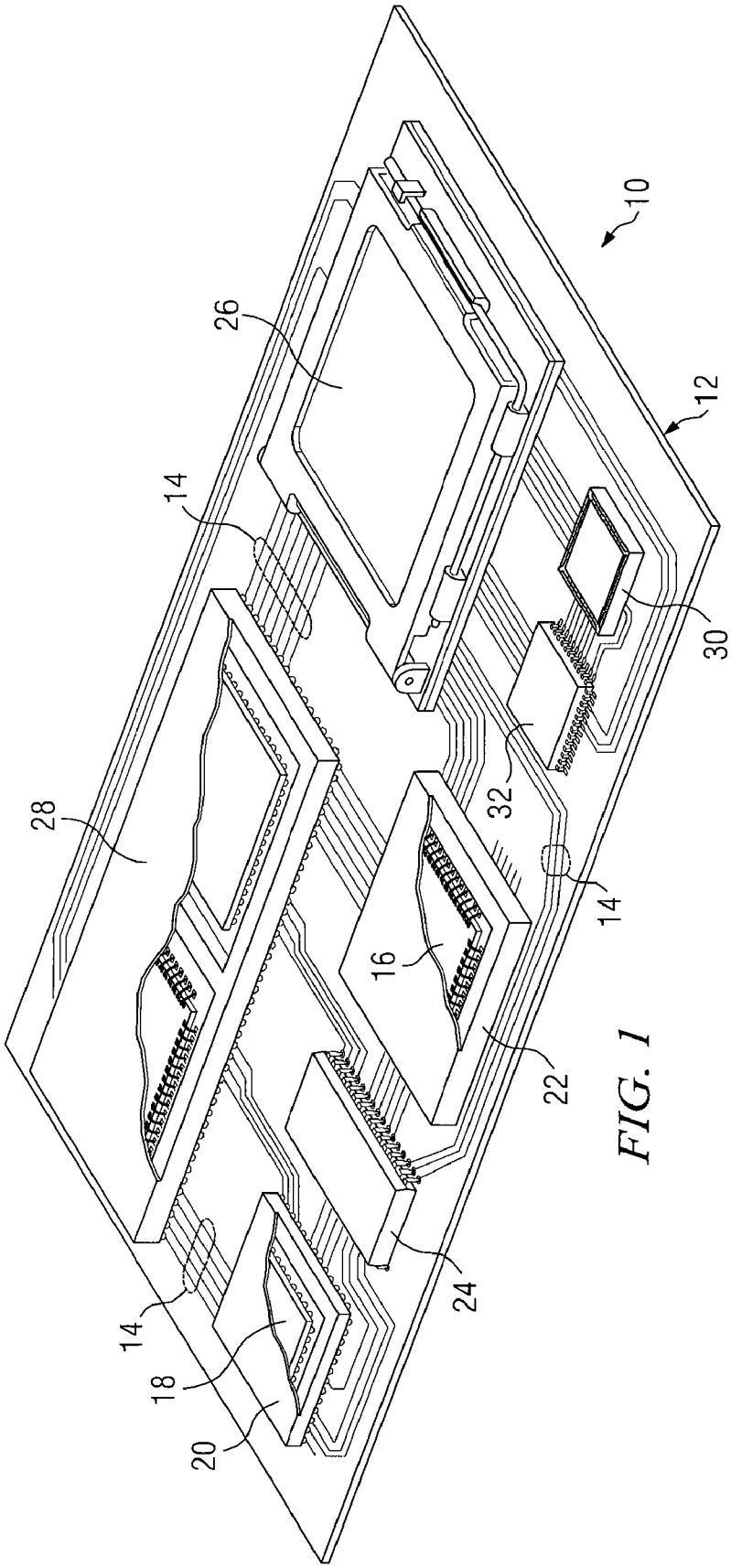

FIG. 1

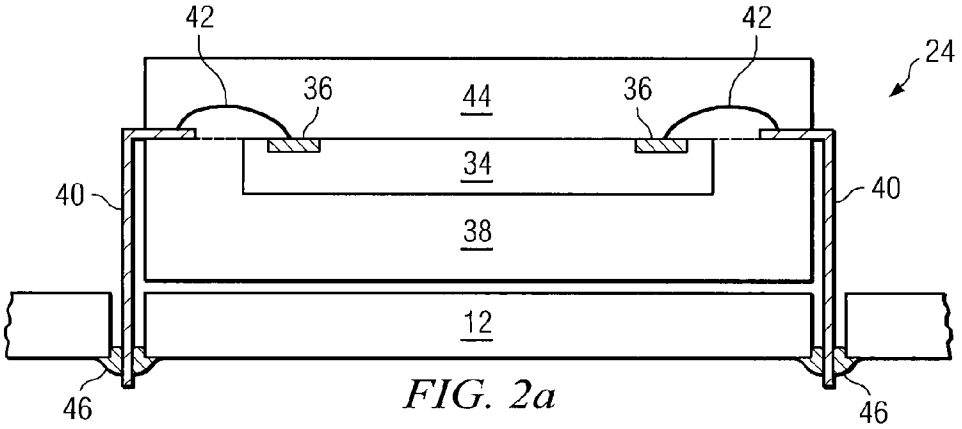

FIG. 2a

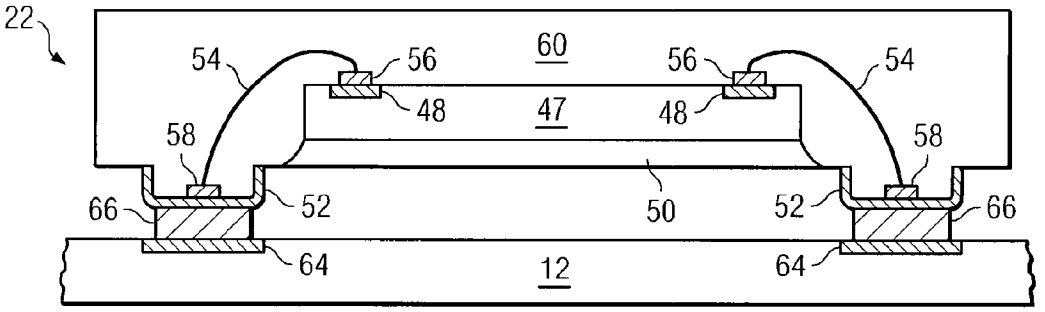

FIG. 2b

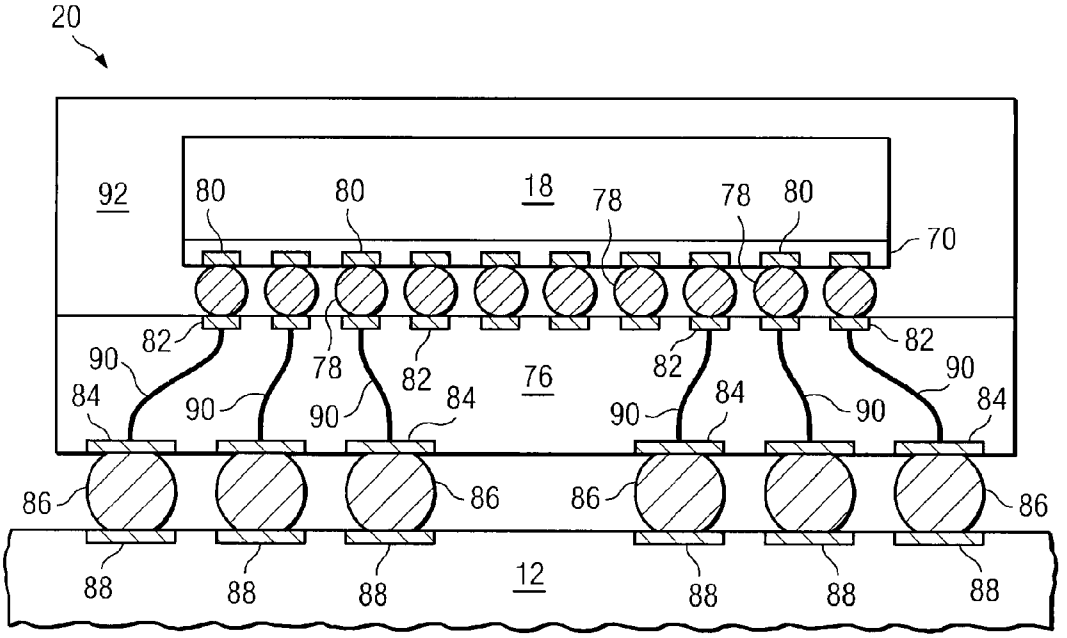

FIG. 2c

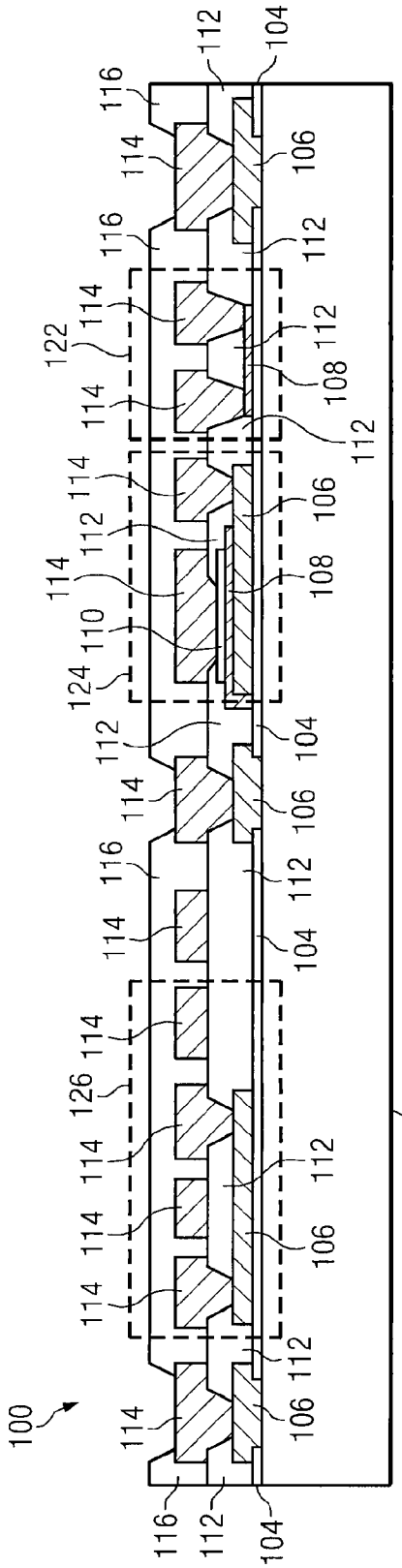
100
102
104
106
108
110
112
114
116
122
124
126

FIG. 3a

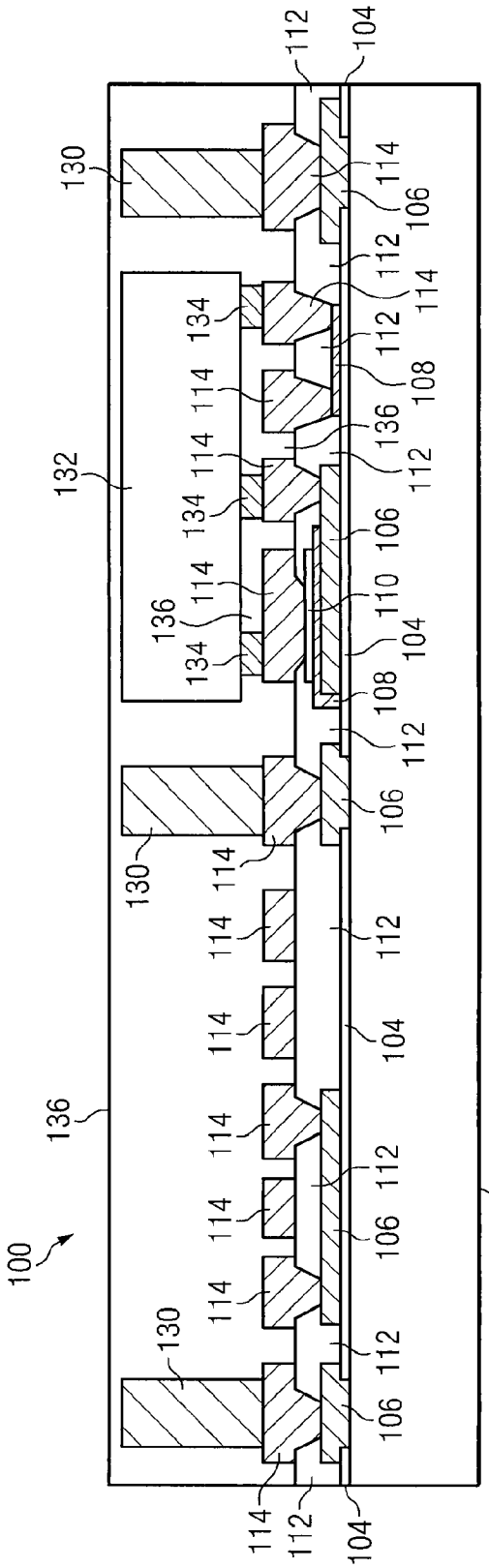
100
102
104
106
108
110
112
114
130
132
134
136

FIG. 3b

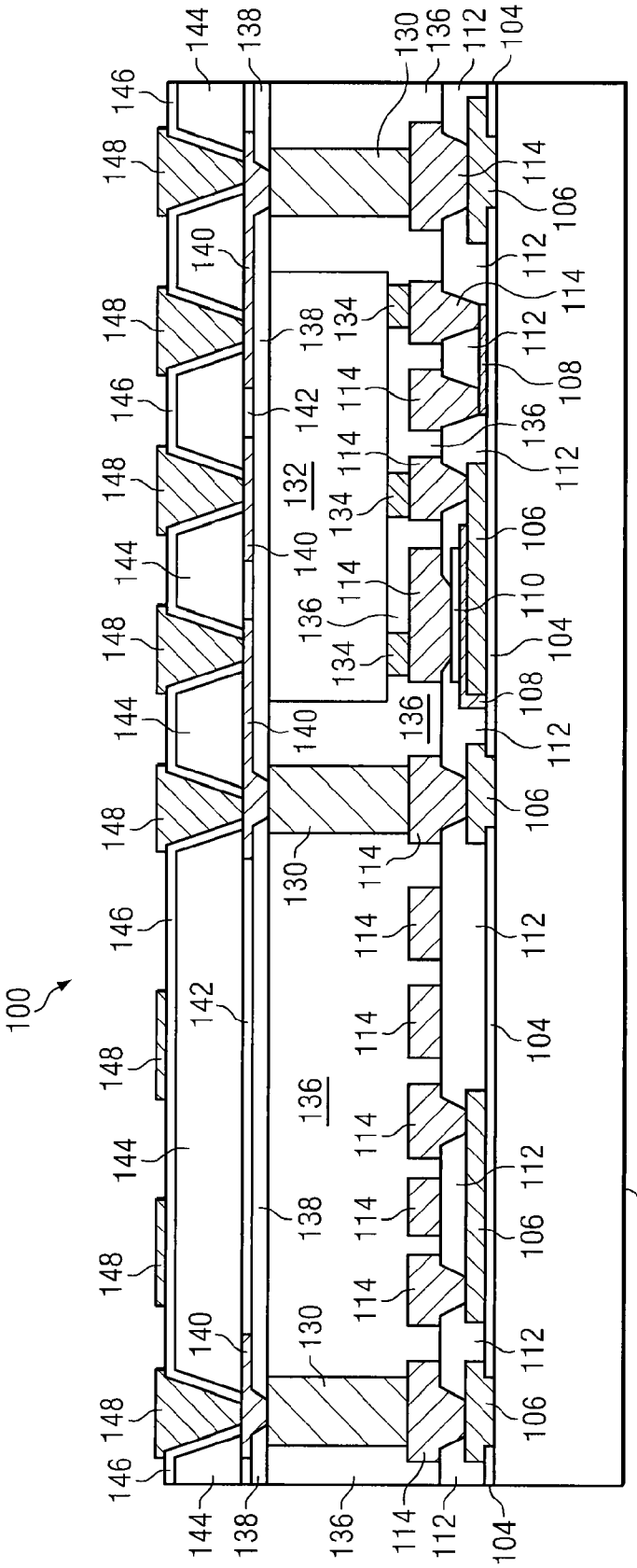
100
102
104
106
108
110
112
114
130
132
134
136
138
140
142
144
146
148

FIG. 3c

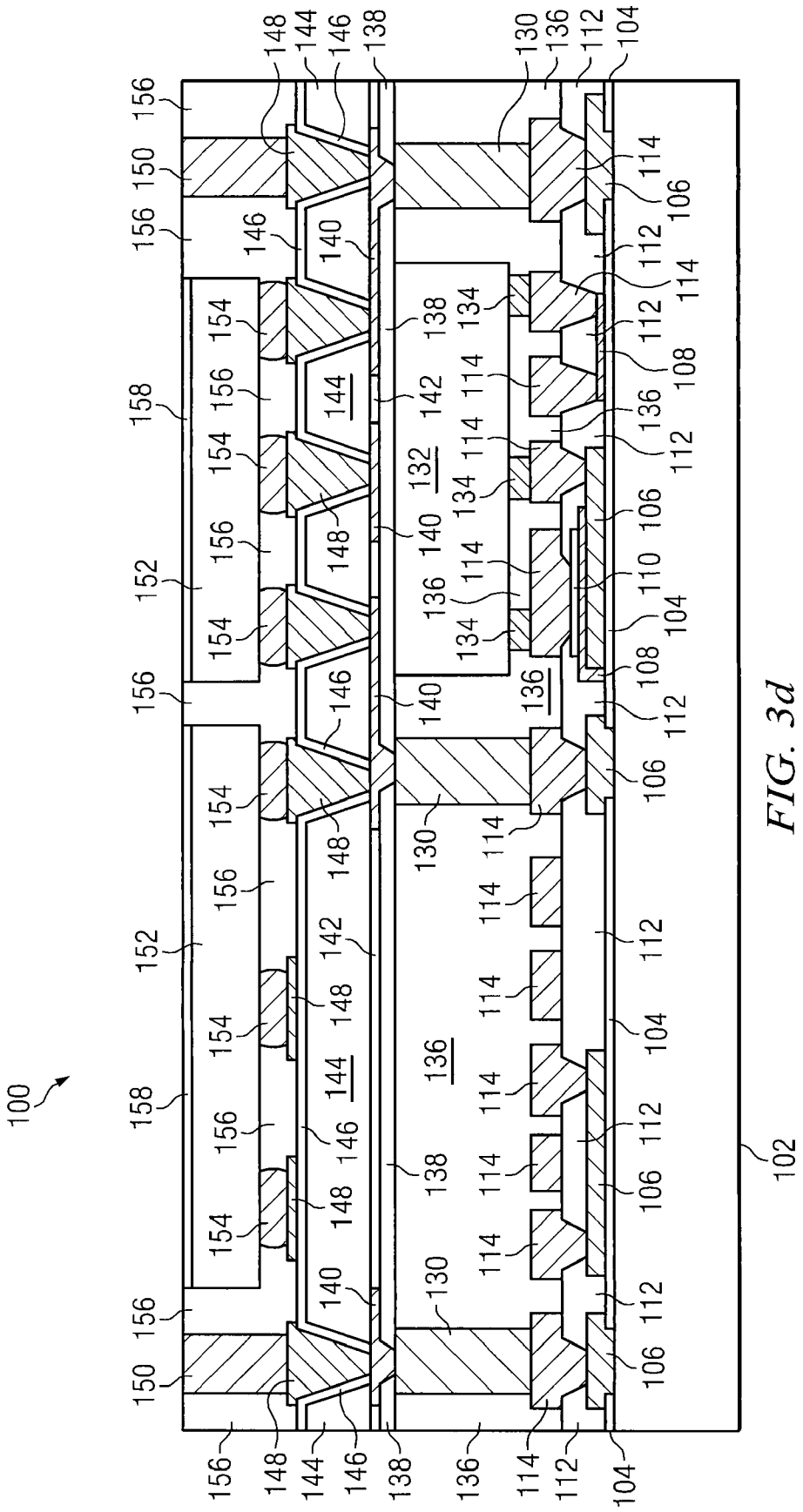
100
102
104
106
108
110
112
114
130
132
134
136
138
140
142
144
146
148
150
152
154
156
158

FIG. 3d

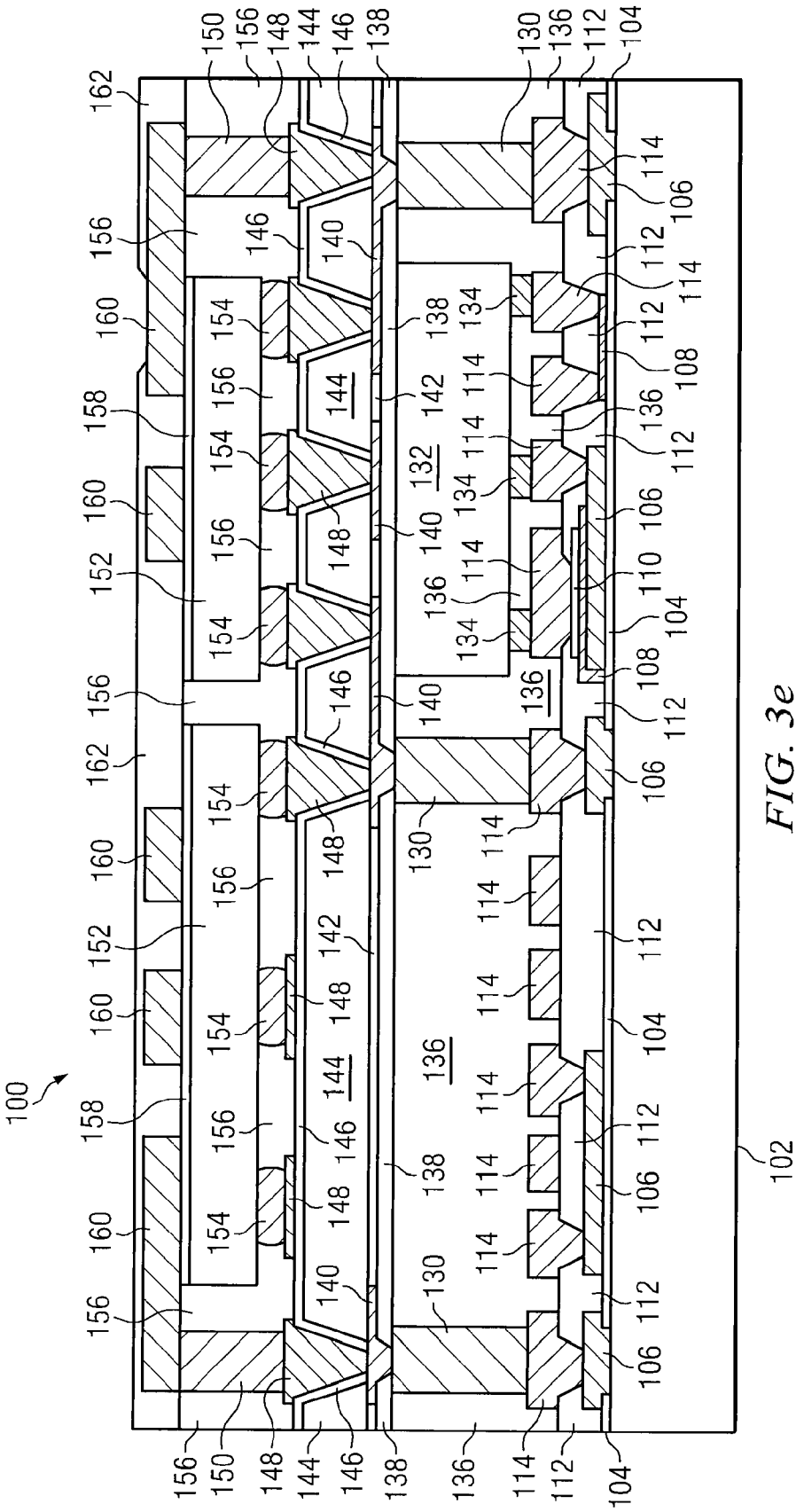
100
102
104
106
108
110
112
114
130
132
134
136
138
140
142
144
146
148
150
152
154
156
158
160
162

FIG. 3e

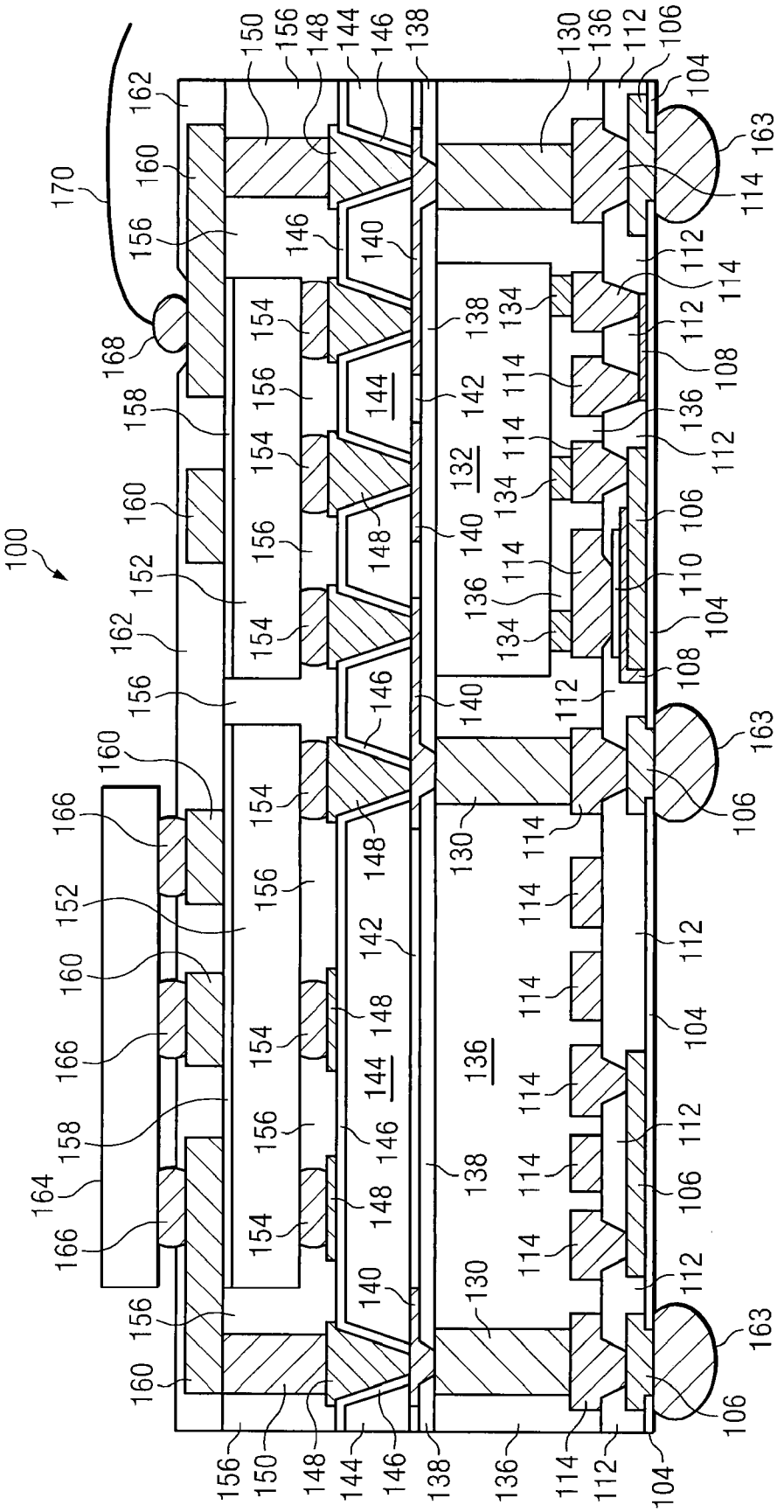
100
104
106
108
110
112
114
130
132
134
136
138
140
142
144
146
148
150
152
154
156
158
160
162
163
164
166
168
170

FIG. 3f

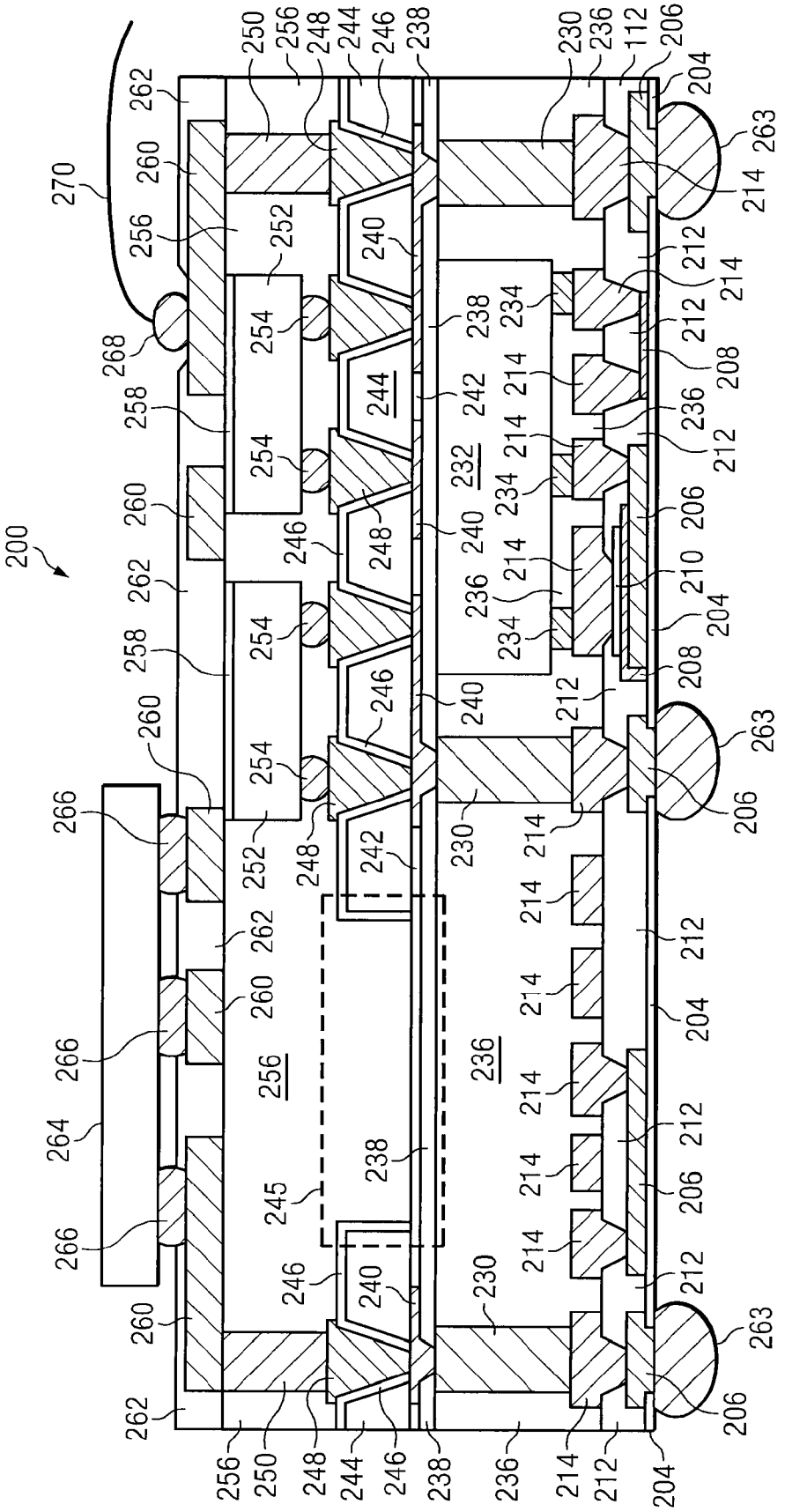
200
204
206
208
210
212
214
230
232
234
236
238
240
242
244
245
246
248
250
252
254
256
258
260
262
263
264
266
268
270
112

FIG. 4

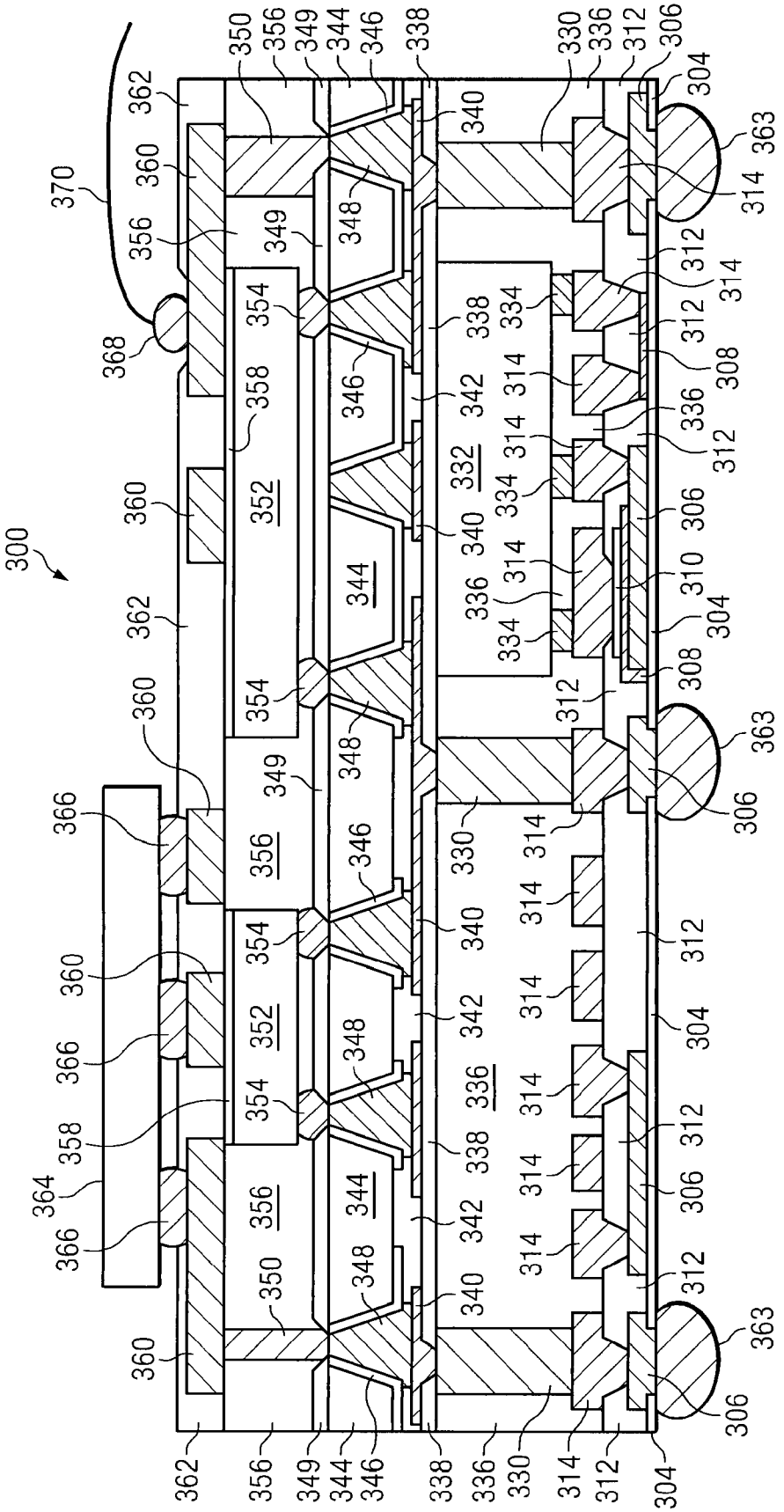
300
304
306
308
310
312
314
330
332
334
336
338
340
342
344
346
348
349
350
352
354
356
358
360
362
363
364
366
368
370

FIG. 5

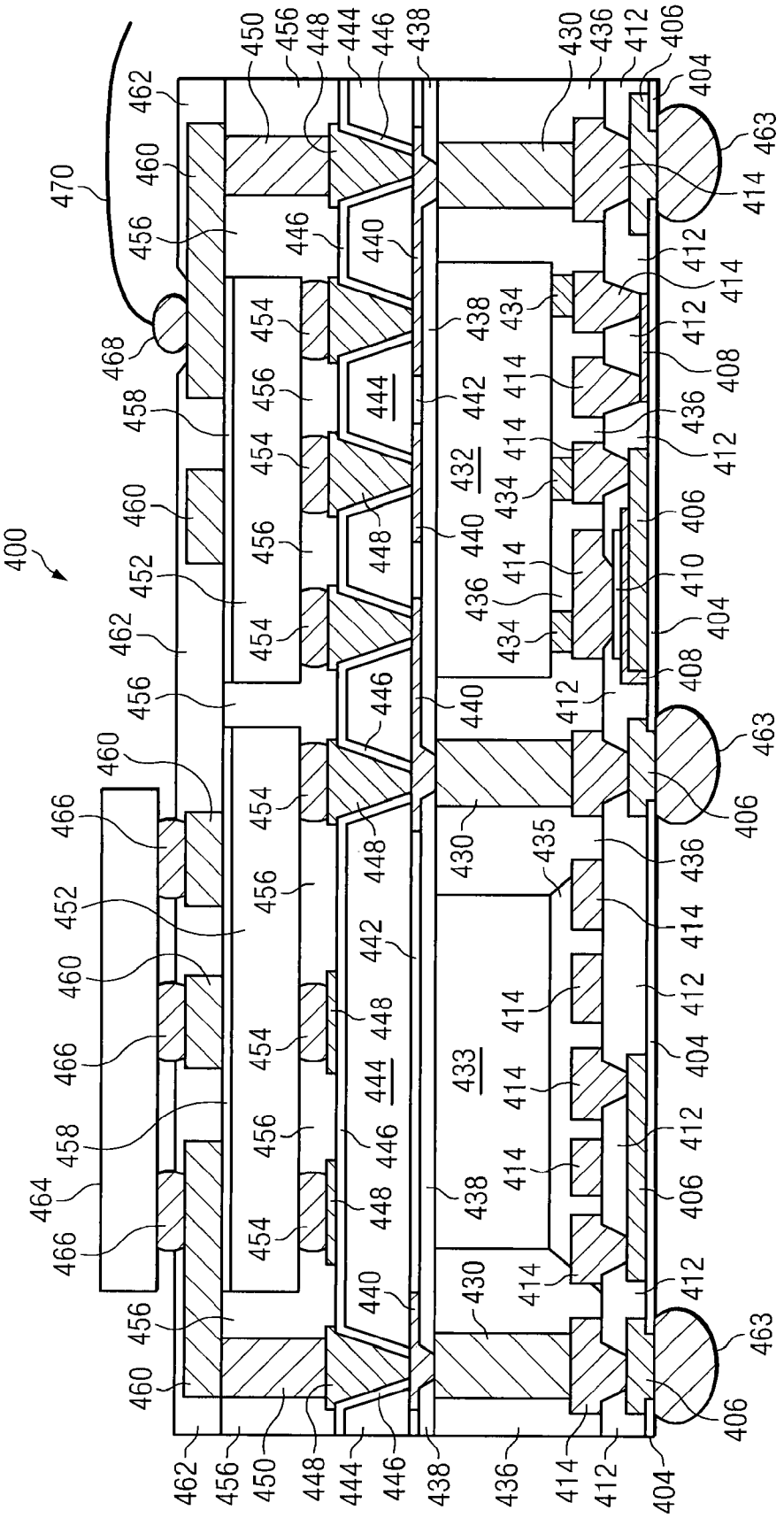
400
470
462
460
456
468
458
452
466
464
450
448
444
446
438
430
436
412
406
404
463
414
440
454
442
432
434
410
408
435
433

FIG. 6

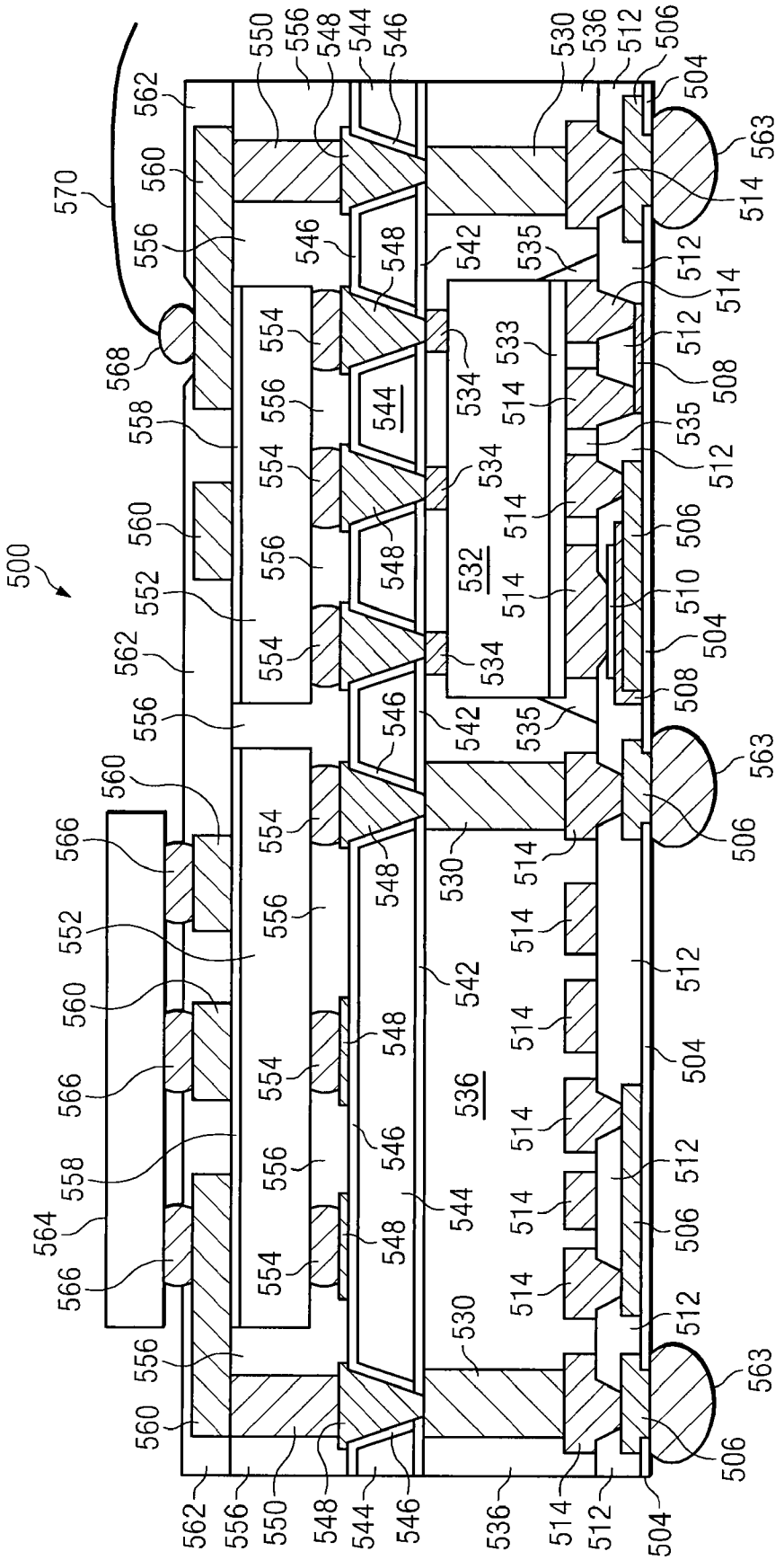
500
504
506
508
510
512
514
530
532
533
534
535
536
542
544
546
548
550
552
554
556
558
560
562
563
564
566
568
570

FIG. 7

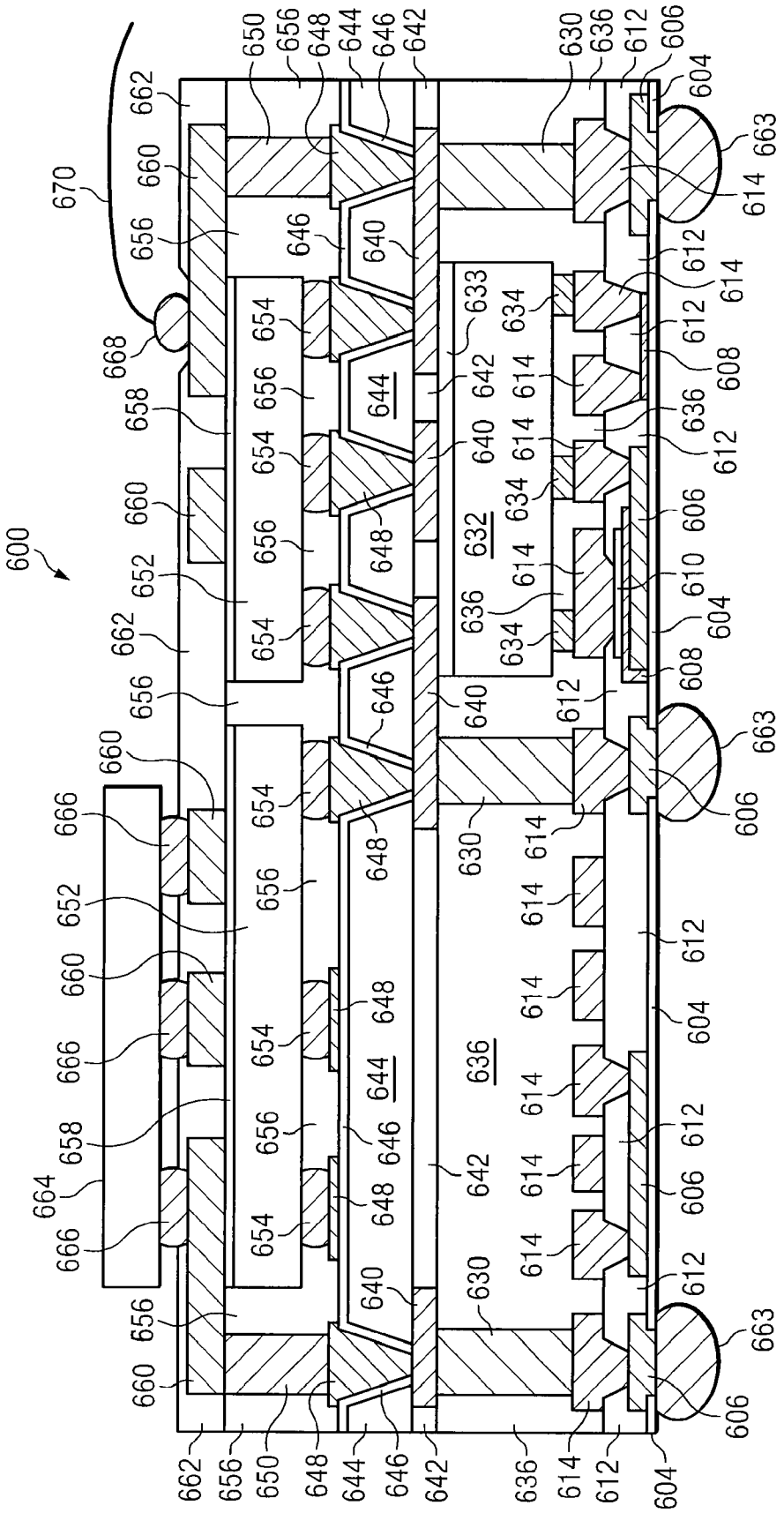
600
604
606
608
610
612
614
630
632
633
634
636
640
642
644
646
648
650
652
654
656
658
660
662
663
664
666
668
670

FIG. 8

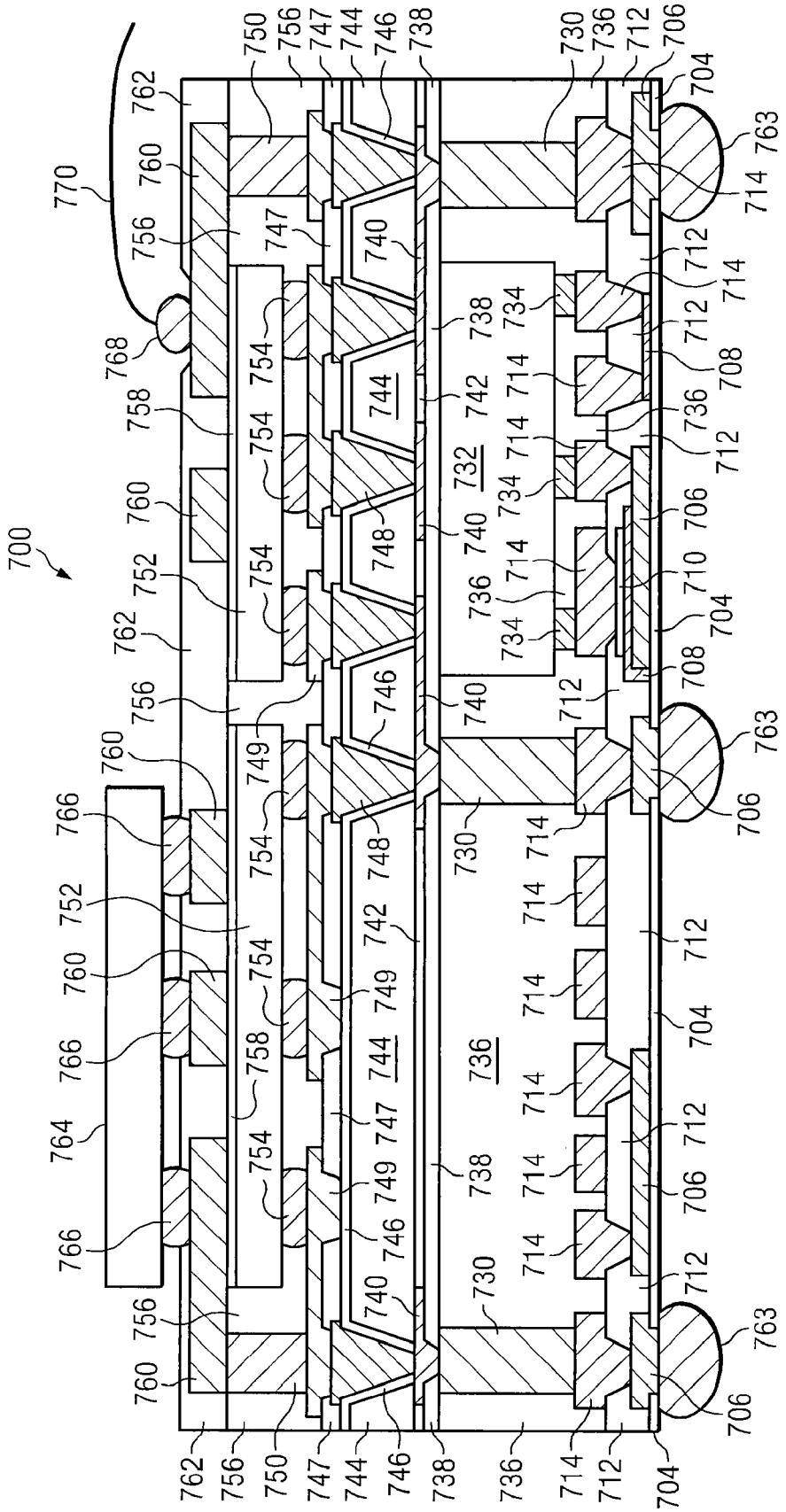
700
704
706
708
710
712
714
730
732
734
736
738
740
742
744
746
747
748
749
750
752
754
756
758
760
762
763
764
766
768
770

FIG. 9

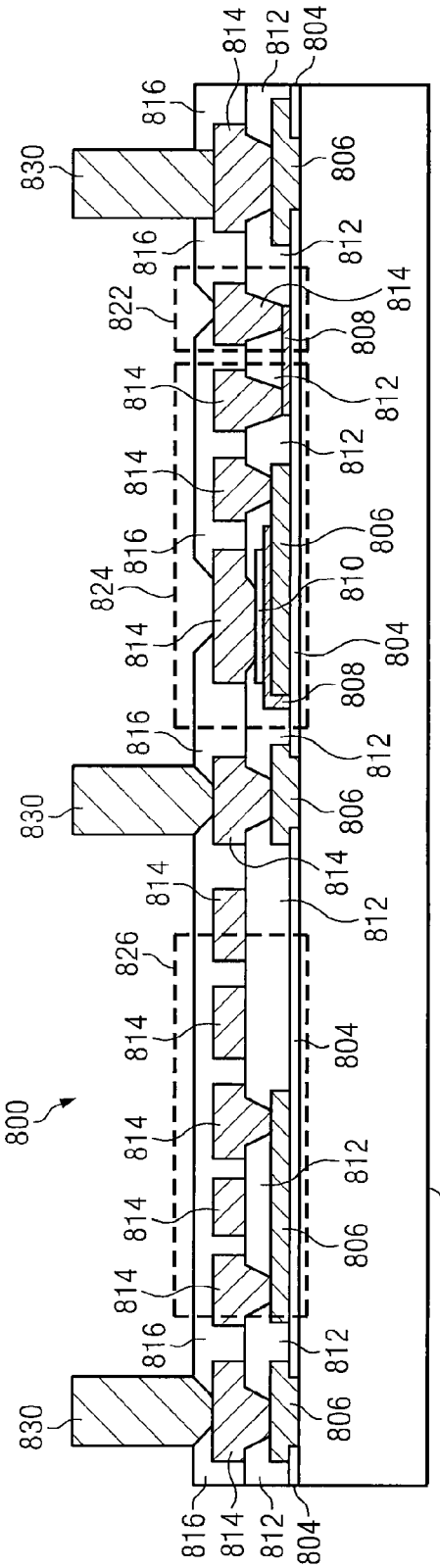

FIG. 10a

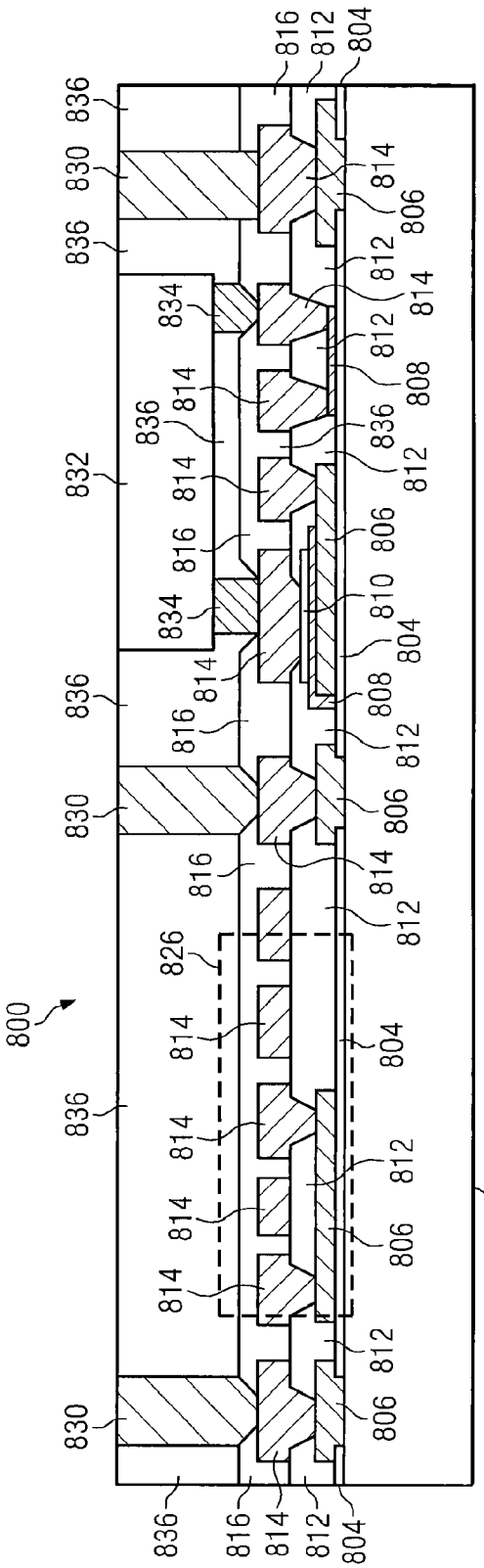

FIG. 10b

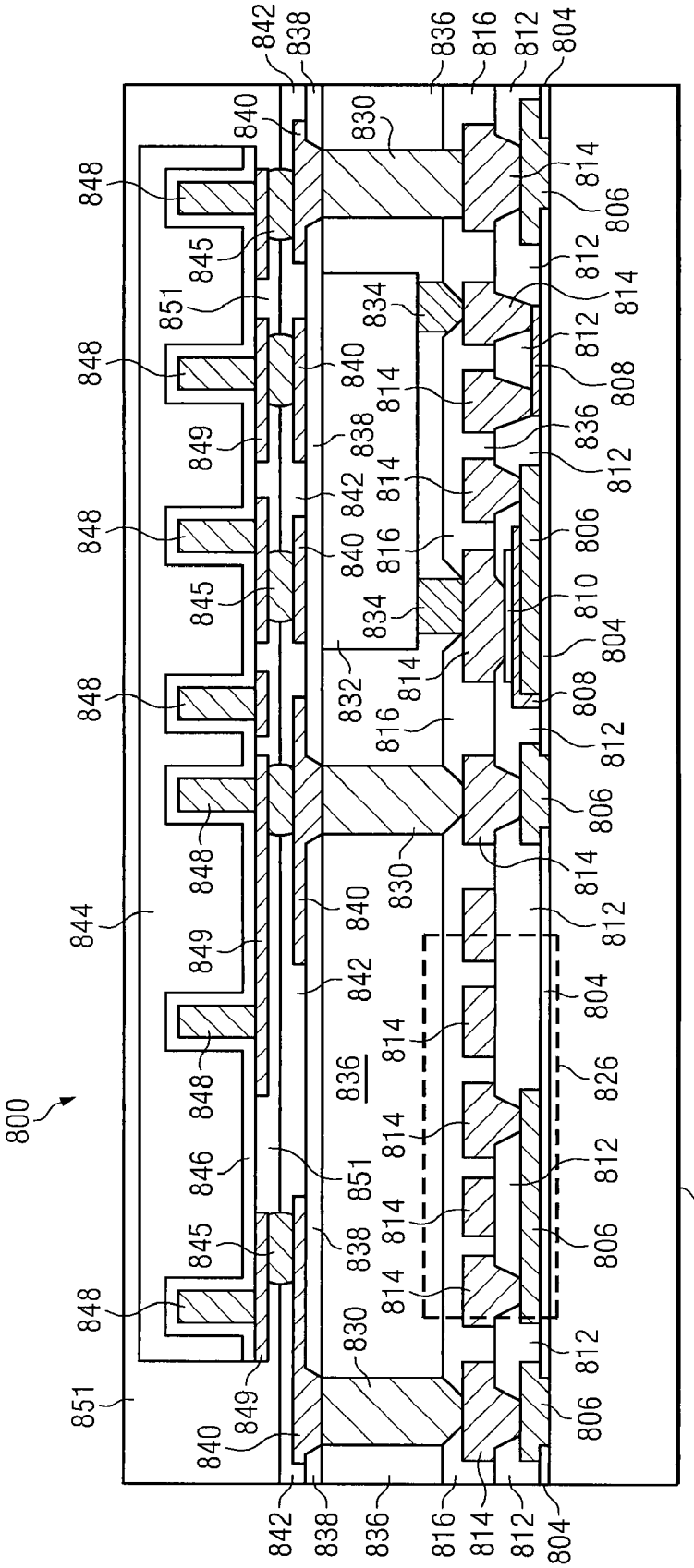
800
802
804
806
808
810
812
814
816
826
830
832
834
836
838
840
842
844
845
846
848
849
851

FIG. 10c

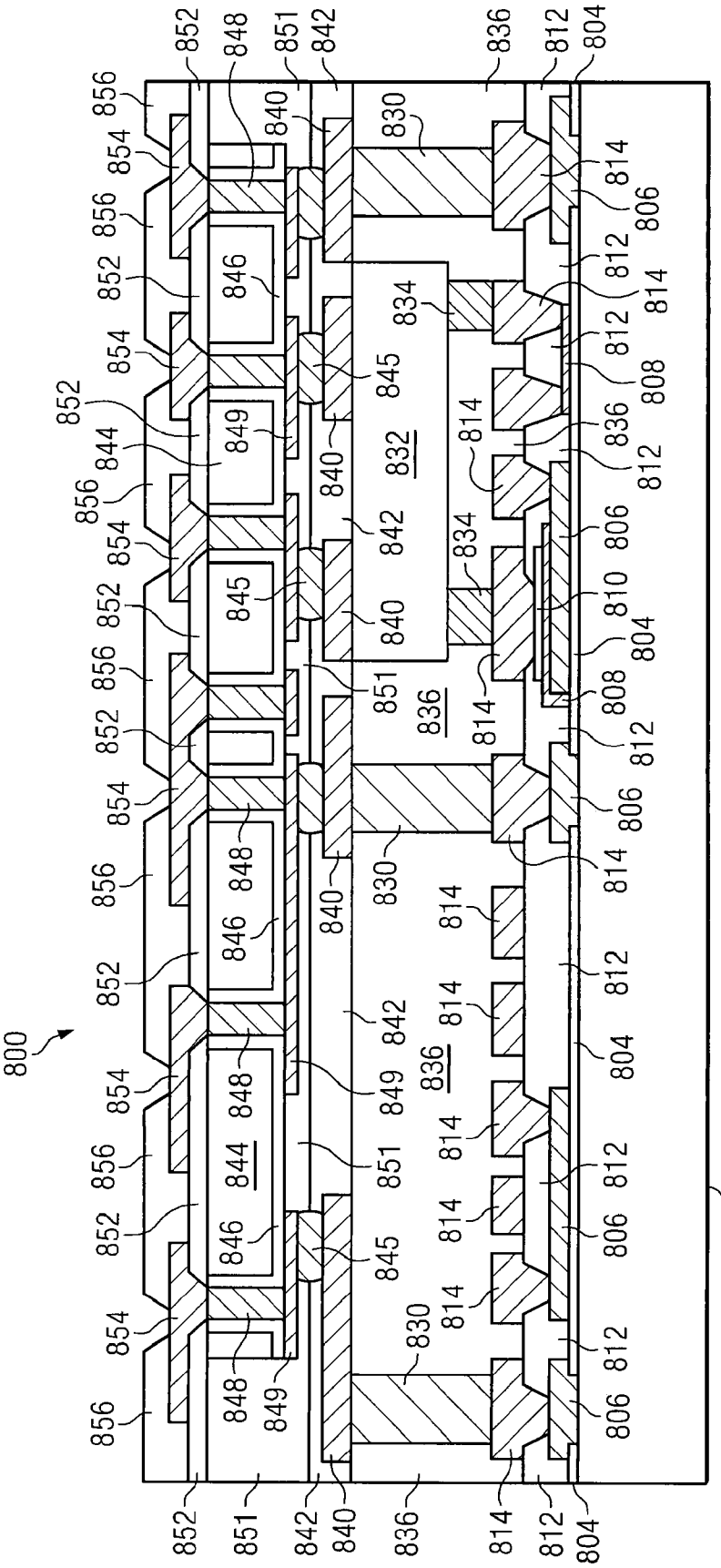
800
802
804
806
808
810
812
814
830
832
834
836
840
842
844
845
846
848
849
851
852
854
856

FIG. 10d

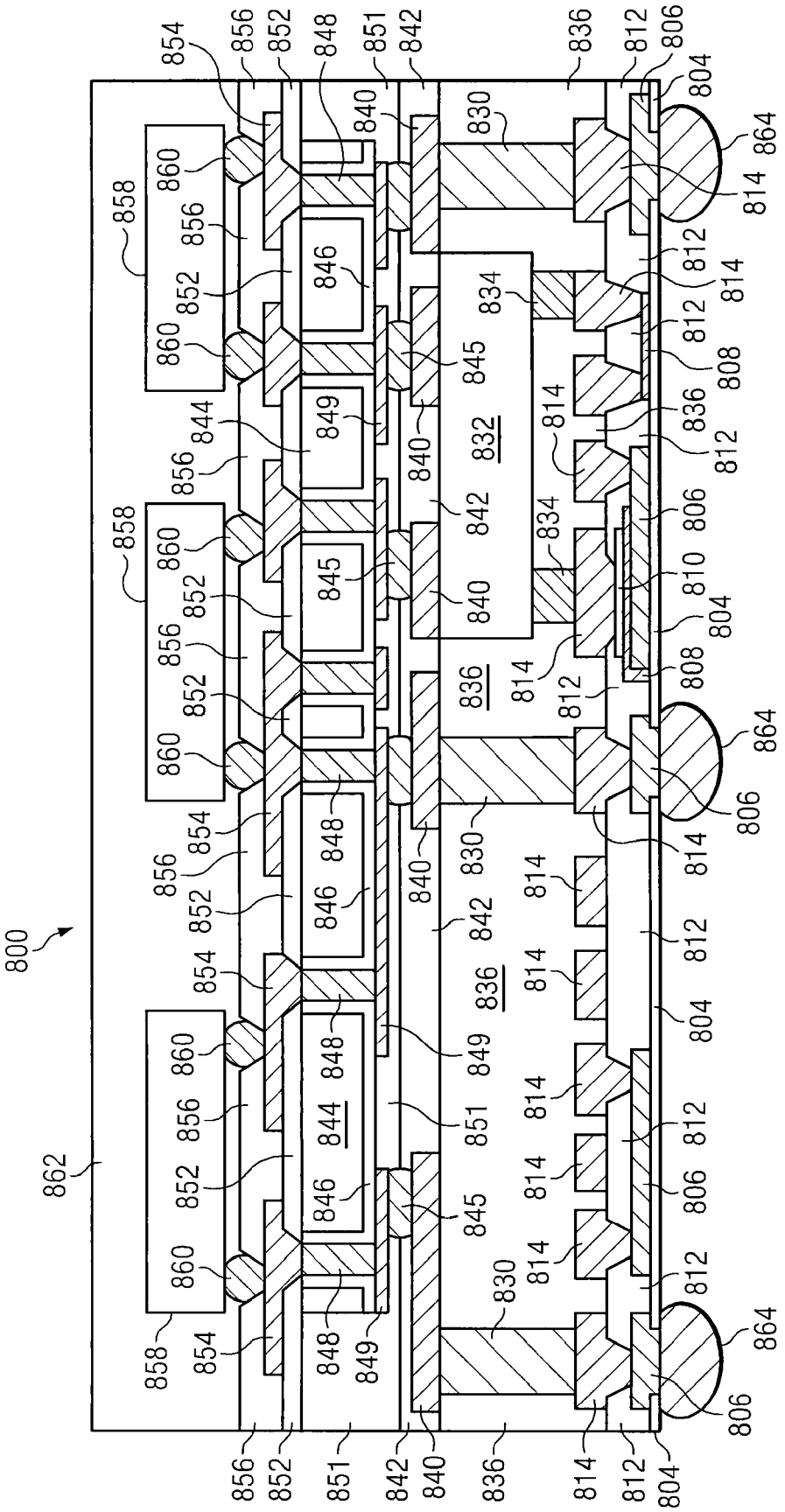
800
862
858
860
856
852
854
848
849
844
846
845
851
842
840
830
832
834
836
812
814
806
804
808
810
864

FIG. 10e

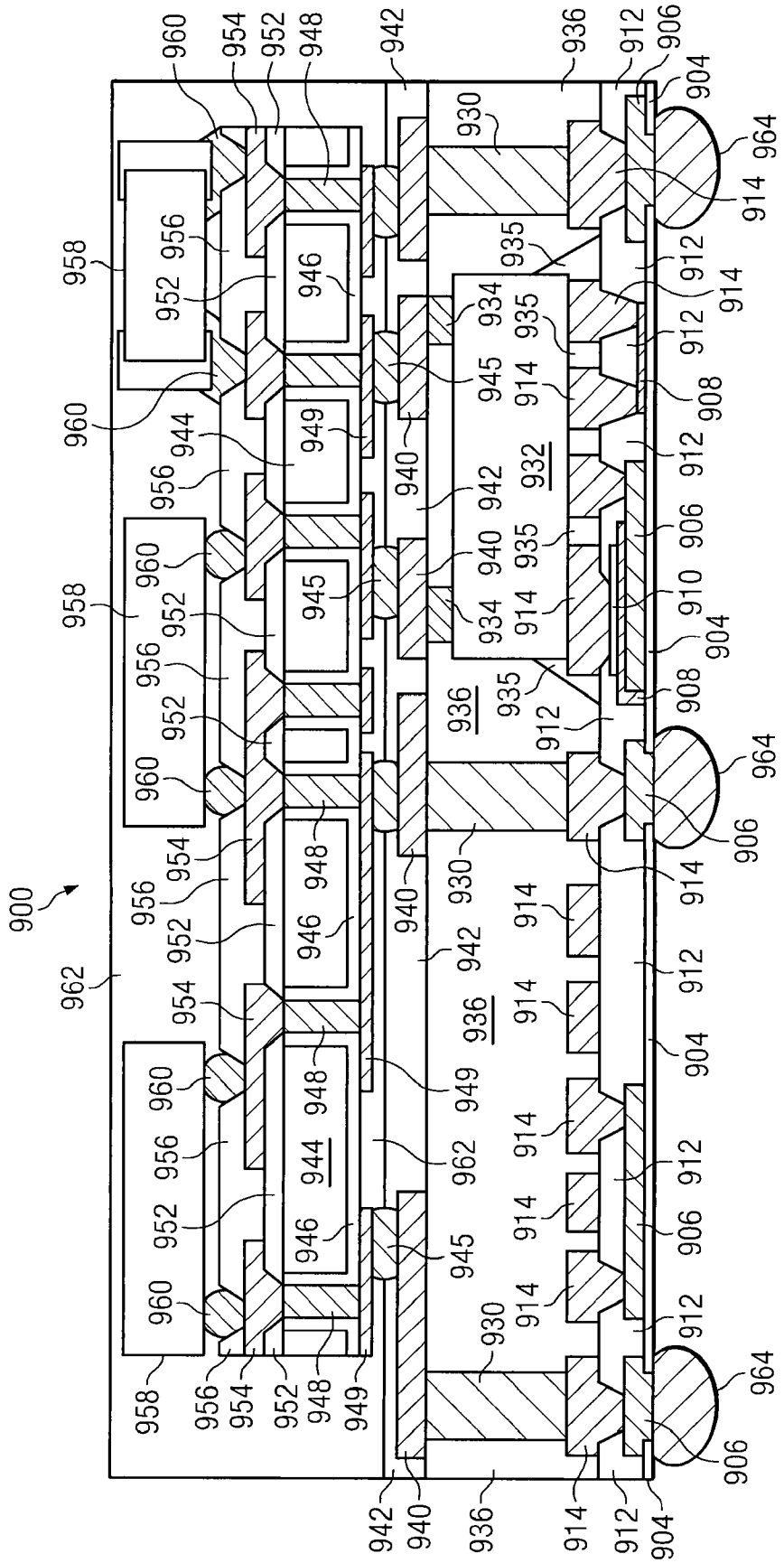
900
958
960
956
954
952
948
949
944
946
945
962
942
940
936
930
934
935
932
914
912
910
908
906
904
964

FIG. 11

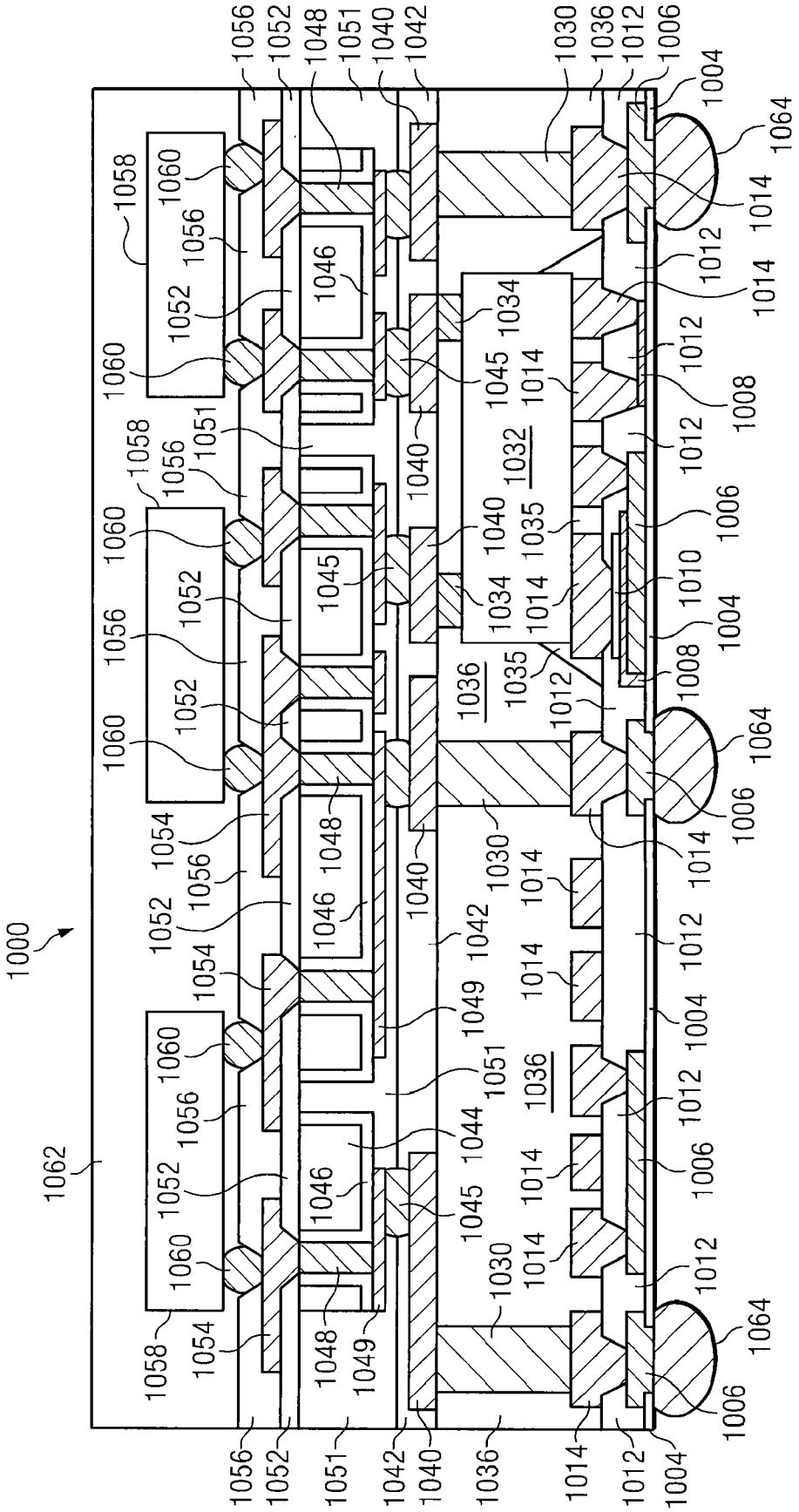
1000
1062
1058
1060
1056
1052
1054
1051
1048
1049
1046
1045
1044
1042
1040
1036
1035
1034
1032
1030
1014
1012
1010
1008
1006
1004
1064

FIG. 12

SEMICONDUCTOR PACKAGE WITH SEMICONDUCTOR CORE STRUCTURE AND METHOD OF FORMING THE SAME

CLAIM TO DOMESTIC PRIORITY

The present application is a division of U.S. patent application Ser. No. 12/329,778, filed Dec. 8, 2008, and claims priority to the foregoing parent application pursuant to 35 U.S.C. §120.

FIELD OF THE INVENTION

The present invention relates in general to semiconductor devices and, more particularly, to a semiconductor device having a semiconductor core and an integrated passive device (IPD) structure formed away from the core.

BACKGROUND OF THE INVENTION

Semiconductor devices are commonly found in modern electronic products. Semiconductor devices vary in the number and density of electrical components. Discrete semiconductor devices generally contain one type of electrical component, e.g., light emitting diode (LED), transistor, resistor, capacitor, inductor, and power metal oxide semiconductor field effect transistor (MOSFET). Integrated semiconductor devices typically contain hundreds to millions of electrical components. Examples of integrated semiconductor devices include microcontrollers, microprocessors, charged-coupled devices (CCDs), solar cells, and digital micro-mirror devices (DMDs).

Semiconductor devices perform a wide range of functions such as high-speed calculations, transmitting and receiving electromagnetic signals, controlling electronic devices, transforming sunlight to electricity, and creating visual projections for television displays. Semiconductor devices are found in the fields of entertainment, communications, power generation, networks, computers, and consumer products. Semiconductor devices are also found in electronic products including military, aviation, automotive, industrial controllers, and office equipment.

Semiconductor devices exploit the electrical properties of semiconductor materials. The atomic structure of semiconductor material allows its electrical conductivity to be manipulated by the application of an electric field or through the process of doping. Doping introduces impurities into the semiconductor material to manipulate and control the conductivity of the semiconductor device.

A semiconductor device contains active and passive electrical structures. Active structures, including transistors, control the flow of electrical current. By varying levels of doping and application of an electric field, the transistor either promotes or restricts the flow of electrical current. Passive structures, including resistors, diodes, and inductors, create a relationship between voltage and current necessary to perform a variety of electrical functions. The passive and active structures are electrically connected to form logic circuits, which enable the semiconductor device to perform high-speed calculations and other useful functions.

Semiconductor devices are generally manufactured using two complex manufacturing processes, i.e., front-end manufacturing, and back-end manufacturing, each involving potentially hundreds of steps. Front-end manufacturing involves the formation of a plurality of die on the surface of a semiconductor wafer. Each die is typically identical and contains circuits formed by electrically connecting active and passive components. Back-end manufacturing involves singulating individual die from the finished wafer and packaging the die to provide structural support and environmental isolation.

One goal of semiconductor manufacturing is to produce smaller semiconductor devices. Smaller devices typically consume less power, have higher performance, and can be produced more efficiently. In addition, smaller semiconductor devices have a smaller footprint, which is desirable for smaller end products. A smaller die size may be achieved by improvements in the front-end process resulting in die with smaller, higher density active and passive components. Back-end processes may result in semiconductor device packages with a smaller footprint by improvements in electrical interconnection and packaging materials.

In many applications, semiconductor packages combine analog and digital circuitry. To simplify fabrication, the packages are often constructed by combining an IPD structure with other circuits or packaged die to provide the necessary functionality. Generally, the IPD structure is fabricated over a high resistivity substrate. Unfortunately, the integration of the IPD structure with one or more die or chips can result in a low-reliability device. Because the coefficient of thermal expansion (CTE) of the high resistivity substrate of the IPD structure is often different from that of the integrated die or chips, the devices expand and contract at different rates as their overall temperature changes. The resulting expansion mismatch can result in damage to the internal structure of the semiconductor package causing reliability problems.

SUMMARY OF THE INVENTION

In one embodiment, the present invention is a semiconductor device comprising a temporary carrier for supporting the semiconductor device and an IPD structure disposed over the temporary carrier. The IPD structure includes an inductor, resistor, or capacitor. The semiconductor device further comprises a plurality of first conductive posts disposed over the temporary carrier, a first semiconductor die mounted to the IPD structure with a flipchip interconnect, and a first wafer molding compound deposited over the first conductive posts and the first semiconductor die. The semiconductor device further comprises a core structure bonded to the first conductive posts over the first semiconductor die, a plurality of conductive through silicon vias (TSVs) disposed in the core structure, and a first redistribution layer (RDL) disposed over the core structure. The core structure includes a silicon material. The semiconductor device further comprises a plurality of second conductive posts disposed over the core structure, a second semiconductor die mounted over the core structure with a flipchip interconnect, a second wafer molding compound deposited over the second conductive posts and the second semiconductor die, and a second RDL disposed over the second molding compound and the second semiconductor die. The second semiconductor die is electrically connected to the core structure.

In another embodiment, the present invention is a semiconductor device comprising an IPD structure, a first semiconductor die mounted to the IPD structure with a flipchip interconnect, and a plurality of first conductive posts disposed adjacent to the first semiconductor die. The semiconductor device further comprises a first molding compound disposed over the first conductive posts and first semiconductor die, a core structure bonded to the first conductive posts over the first semiconductor die, and a plurality of TSVs disposed in the core structure. The semiconductor device further comprises a plurality of second conductive posts disposed over the

core structure, a second semiconductor die mounted over the core structure, and a second molding compound disposed over the second conductive posts and the second semiconductor die. The second semiconductor die is electrically connected to the core structure.

In another embodiment, the present invention is a semiconductor device comprising an IPD structure, a first semiconductor die mounted to the IPD structure, and a plurality of first conductive posts disposed over the IPD structure and outside a footprint of the first semiconductor die. The semiconductor device further comprises a first molding compound deposited over the first conductive posts, the IPD structure, and the first semiconductor die. The semiconductor device further comprises a wafer core structure bonded to the first conductive posts over the first semiconductor die. The wafer core structure has sufficient area to cover the first conductive posts and the first semiconductor die.

In another embodiment, the present invention is a semiconductor device comprising an IPD structure, a first semiconductor die mounted to the IPD structure, and a plurality of first conductive posts disposed over the IPD structure away from the first semiconductor die. The semiconductor device further comprises a core structure bonded to the first conductive posts over the first semiconductor die and a second semiconductor die mounted over the core structure. The core structure includes a semiconductor material and conductive TSVs, and the second semiconductor die is electrically connected to the core structure.

BRIEF DESCRIPTION OF THE DRAWINGS

FIG. **1** illustrates a printed circuit board (PCB) with different types of packages mounted to its surface;

FIGS. **2***a*-**2***c* illustrate further detail of the representative semiconductor packages mounted to the PCB;

FIGS. **3***a*-**3***f* illustrate a method of forming a semiconductor package over a dummy wafer;

FIG. **4** illustrates a semiconductor package including a core structure and cavity formed over the inductor portion of an IPD structure;

FIG. **5** illustrates a semiconductor package including a core structure with a plurality of pre-fabricated TSVs;

FIG. **6** illustrates a semiconductor package including a core structure and dummy die mounted over an IPD structure;

FIG. **7** illustrates a semiconductor package including a core structure and die mounted to the IPD structure and electrically connected to the core structure;

FIG. **8** illustrates a semiconductor package including a core structure having pre-fabricated TSVs and die mounted to the IPD structure;

FIG. **9** illustrates a semiconductor package including a core structure having pre-fabricated TSVs and an RDL formed over the core structure;

FIGS. **10***a*-**10***e* illustrate a method of forming a semiconductor package having a semiconductor core with pre-fabricated conductive TSVs;

FIG. **11** illustrates a semiconductor package having a semiconductor core with pre-fabricated conductive TSVs and die mounted over an IPD structure of the semiconductor package; and

FIG. **12** illustrates a semiconductor package having a semiconductor core with pre-fabricated conductive TSVs and dummy vias.

DETAILED DESCRIPTION OF THE DRAWINGS

The present invention is described in one or more embodiments in the following description with reference to the Figures, in which like numerals represent the same or similar elements. While the invention is described in terms of the best mode for achieving the invention's objectives, it will be appreciated by those skilled in the art that it is intended to cover alternatives, modifications, and equivalents as may be included within the spirit and scope of the invention as defined by the appended claims and their equivalents as supported by the following disclosure and drawings.

Semiconductor devices are generally manufactured using two complex manufacturing processes: front-end manufacturing and back-end manufacturing. Front-end manufacturing involves the formation of a plurality of die on the surface of a semiconductor wafer. Each die on the wafer contains active and passive electrical components which are electrically connected to form functional electrical circuits. Active electrical components, such as transistors, have the ability to control the flow of electrical current. Passive electrical components, such as capacitors, inductors, resistors, and transformers, create a relationship between voltage and current necessary to perform electrical circuit functions.

Passive and active components are formed on the surface of the semiconductor wafer by a series of process steps including doping, deposition, photolithography, etching, and planarization. Doping introduces impurities into the semiconductor material by techniques such as ion implantation or thermal diffusion. The doping process modifies the electrical conductivity of semiconductor material in active devices, transforming the semiconductor material into a permanent insulator, permanent conductor, or changing the way the semiconductor material changes in conductivity in response to an electric field. Transistors contain regions of varying types and degrees of doping arranged as necessary to enable the transistor to promote or restrict the flow of electrical current upon the application of an electric field.

Active and passive components are formed by layers of materials with different electrical properties. The layers can be formed by a variety of deposition techniques determined in part by the type of material being deposited. For example, thin film deposition may involve chemical vapor deposition (CVD), physical vapor deposition (PVD), electrolytic plating, and electroless plating processes. Each layer is generally patterned to form portions of active components, passive components, or electrical connections between components.

The layers can be patterned using photolithography, which involves the deposition of light sensitive material, e.g., photoresist, over the layer to be patterned. A pattern is transferred from a photomask to the photoresist using light. The portion of the photoresist pattern subjected to light is removed using a solvent, exposing portions of the underlying layer to be patterned. The remainder of the photoresist is removed, leaving behind a patterned layer. Alternatively, some types of materials are patterned by directly depositing the material into the areas or voids formed by a previous deposition/etch process using techniques such as electroless and electrolytic plating.

Depositing a thin film of material over an existing pattern can exaggerate the underlying pattern and create a non-uniformly flat surface. A uniformly flat surface is required to produce smaller and more densely packed active and passive components. Planarization can be used to remove material from the surface of the wafer and produce a uniformly flat surface. Planarization involves polishing the surface of the wafer with a polishing pad. An abrasive material and corrosive chemical are added to the surface of the wafer during polishing. The combined mechanical action of the abrasive and corrosive action of the chemical removes any irregular topography, resulting in a uniformly flat surface.

Back-end manufacturing refers to cutting or singulating the finished wafer into the individual die and then packaging the die for structural support and environmental isolation. To singulate the die, the wafer is scored and broken along non-functional regions of the wafer called saw streets or scribes. The wafer is singulated using a laser cutting device or saw blade. After singulation, the individual die are mounted to a package substrate that includes pins or contact pads for interconnection with other system components. Contact pads formed over the semiconductor die are then connected to contact pads within the package. The electrical connections can be made with solder bumps, stud bumps, conductive paste, or wirebonds. An encapsulant or other molding material is deposited over the package to provide physical support and electrical isolation. The finished package is then inserted into an electrical system and the functionality of the semiconductor device is made available to the other system components.

FIG. **1** illustrates electronic device **10** having a chip carrier substrate or PCB **12** with a plurality of semiconductor packages mounted on its surface. Electronic device **10** may have one type of semiconductor package, or multiple types of semiconductor packages, depending on the application. The different types of semiconductor packages are shown in FIG. **1** for purposes of illustration.

Electronic device **10** may be a stand-alone system that uses the semiconductor packages to perform an electrical function. Alternatively, electronic device **10** may be a subcomponent of a larger system. For example, electronic device **10** may be a graphics card, network interface card, or other signal processing card that can be inserted into a computer. The semiconductor package can include microprocessors, memories, application specific integrated circuits (ASICs), logic circuits, analog circuits, RF circuits, discrete devices, or other semiconductor die or electrical components.

In FIG. **1**, PCB **12** provides a general substrate for structural support and electrical interconnect of the semiconductor packages mounted on the PCB. Conductive signal traces **14** are formed on a surface or within layers of PCB **12** using evaporation, electrolytic plating, electroless plating, screen printing, PVD, or other suitable metal deposition process. Signal traces **14** provide for electrical communication between each of the semiconductor packages, mounted components, and other external system components. Traces **14** also provide power and ground connections to each of the semiconductor packages.

In some embodiments, a semiconductor device has two packaging levels. First level packaging is the technique for mechanically and electrically attaching the semiconductor die to a carrier. Second level packaging involves mechanically and electrically attaching the carrier to the PCB. In other embodiments, a semiconductor device may only have the first level packaging where the die is mechanically and electrically mounted directly to the PCB.

For the purpose of illustration, several types of first level packaging, including wire bond package **16** and flip chip **18**, are shown on PCB **12**. Additionally, several types of second level packaging, including ball grid array (BGA) **20**, bump chip carrier (BCC) **22**, dual in-line package (DIP) **24**, land grid array (LGA) **26**, multi-chip module (MCM) **28**, quad flat non-leaded package (QFN) **30**, and quad flat package **32**, are shown mounted on PCB **12**. Depending upon the system requirements, any combination of semiconductor packages, configured with any combination of first and second level packaging styles, as well as other electronic components, can be connected to PCB **12**. In some embodiments, electronic device **10** includes a single attached semiconductor package, while other embodiments call for multiple interconnected packages. By combining one or more semiconductor packages over a single substrate, manufacturers can incorporate pre-made components into electronic devices and systems. Because the semiconductor packages include sophisticated functionality, electronic devices can be manufactured using cheaper components and shorter manufacturing process. The resulting devices are less likely to fail and less expensive to manufacture resulting in lower costs for consumers.

FIG. **2***a* illustrates further detail of DIP **24** mounted PCB **12**. DIP **24** includes semiconductor die **34** having contact pads **36**. Semiconductor die **34** includes an active area containing analog or digital circuits implemented as active devices, passive devices, conductive layers, and dielectric layers formed within semiconductor die **34** and are electrically interconnected according to the electrical design of the die. For example, the circuit may include one or more transistors, diodes, inductors, capacitors, resistors, and other circuit elements formed within the active area of die **34**. Contact pads **36** are made with a conductive material, such as aluminum (Al), copper (Cu), tin (Sn), nickel (Ni), gold (Au), or silver (Ag), and are electrically connected to the circuit elements formed within die **34**. Contact pads **36** are formed by PVD, CVD, electrolytic plating, or electroless plating process. During assembly of DIP **24**, semiconductor die **34** is mounted to a carrier **38** using a gold-silicon eutectic layer or adhesive material such as thermal epoxy. The package body includes an insulative packaging material such as polymer or ceramic. Conductor leads **40** are connected to carrier **38** and wire bonds **42** are formed between leads **40** and contact pads **36** of die **34** as a first level packaging. Encapsulant **44** is deposited over the package for environmental protection by preventing moisture and particles from entering the package and contaminating die **34**, contact pads **36**, or wire bonds **42**. DIP **24** is connected to PCB **12** by inserting leads **40** into holes formed through PCB **12**. Solder material **46** is flowed around leads **40** and into the holes to physically and electrically connect DIP **24** to PCB **12**. Solder material **46** can be any metal or electrically conductive material, e.g., Sn, lead (Pb), Au, Ag, Cu, zinc (Zn), bismuthinite (Bi), and alloys thereof, with an optional flux material. For example, the solder material can be eutectic Sn/Pb, high-lead, or lead-free.

FIG. **2***b* illustrates further detail of BCC **22** mounted on PCB **12**. Semiconductor die **47** is connected to a carrier by wire bond style first level packaging. BCC **22** is mounted to PCB **12** with a BCC style second level packaging. Semiconductor die **47** having contact pads **48** is mounted over a carrier using an underfill or epoxy-resin adhesive material **50**. Semiconductor die **47** includes an active area containing analog or digital circuits implemented as active devices, passive devices, conductive layers, and dielectric layers formed within semiconductor die **47** and are electrically interconnected according to the electrical design of the die. For example, the circuit may include one or more transistors, diodes, inductors, capacitors, resistors, and other circuit elements formed within the active area of die **47**. Contact pads **48** are made with a conductive material, such as Al, Cu, Sn, Ni, Au, or Ag, and are electrically connected to the circuit elements formed within die **47**. Contact pads **48** are formed by PVD, CVD, electrolytic plating, or electroless plating process. Wire bonds **54** and bond pads **56** and **58** electrically connect contact pads **48** of semiconductor die **47** to contact pads **52** of BCC **22** forming the first level packaging. Molding compound or encapsulant **60** is deposited over semiconductor die **47**, wire bonds **54**, contact pads **48**, and contact pads **52** to provide physical support and electrical isolation for the device. Contact pads **64** are formed on a surface of PCB **12**

using evaporation, electrolytic plating, electroless plating, screen printing, PVD, or other suitable metal deposition process and are typically plated to prevent oxidation. Contact pads **64** electrically connect to one or more conductive signal traces **14**. Solder material is deposited between contact pads **52** of BCC **22** and contact pads **64** of PCB **12**. The solder material is reflowed to form bumps **66** which form a mechanical and electrical connection between BCC **22** and PCB **12**.

In FIG. **2***c*, semiconductor die **18** is mounted face down to carrier **76** with a flip chip style first level packaging. BGA **20** is attached to PCB **12** with a BGA style second level packaging. Active area **70** containing analog or digital circuits implemented as active devices, passive devices, conductive layers, and dielectric layers formed within semiconductor die **18** is electrically interconnected according to the electrical design of the die. For example, the circuit may include one or more transistors, diodes, inductors, capacitors, resistors, and other circuit elements formed within active area **70** of semiconductor die **18**. Semiconductor die **18** is electrically and mechanically attached to carrier **76** through a large number of individual conductive solder bumps or balls **78**. Solder bumps **78** are formed on bump pads or interconnect sites **80**, which are disposed on active areas **70**. Bump pads **80** are made with a conductive material, such as Al, Cu, Sn, Ni, Au, or Ag, and are electrically connected to the circuit elements formed in active area **70**. Bump pads **80** are formed by PVD, CVD, electrolytic plating, or electroless plating process. Solder bumps **78** are electrically and mechanically connected to contact pads or interconnect sites **82** on carrier **76** by a solder reflow process.

BGA **20** is electrically and mechanically attached to PCB **12** by a large number of individual conductive solder bumps or balls **86**. The solder bumps are formed on bump pads or interconnect sites **84**. The bump pads **84** are electrically connected to interconnect sites **82** through conductive lines **90** routed through carrier **76**. Contact pads **88** are formed on a surface of PCB **12** using evaporation, electrolytic plating, electroless plating, screen printing, PVD, or other suitable metal deposition process and are typically plated to prevent oxidation. Contact pads **88** electrically connect to one or more conductive signal traces **14**. The solder bumps **86** are electrically and mechanically connected to contact pads or bonding pads **88** on PCB **12** by a solder reflow process. Molding compound or encapsulant **92** is deposited over semiconductor die **18** and carrier **76** to provide physical support and electrical isolation for the device. The flip chip semiconductor device provides a short electrical conduction path from the active devices on semiconductor die **18** to conduction tracks on PCB **12** in order to reduce signal propagation distance, lower capacitance, and achieve overall better circuit performance. In another embodiment, the semiconductor die **18** can be mechanically and electrically attached directly to PCB **12** using flip chip style first level packaging without carrier **76**.

FIGS. **3***a*-**3***f* illustrate a method of forming semiconductor package **100** having a semiconductor core. As shown in FIG. **3***a*, a dummy wafer **102** is made with silicon (Si) or other semiconductor or rigid materials. The insulation layer **104** is optionally formed over dummy wafer **102**. The insulation layer **104** is typically made with silicon dioxide (SiO2), but can also be made with silicon nitride (Si3N4), silicon oxynitride (SiON), tantalum pentoxide (Ta2O5), zircon (ZrO2), aluminum oxide (Al2O3), or other material having dielectric properties. The deposition of insulation layer **104** involves CVD, or thermal oxidation. The insulation layer **104** may be patterned before deposition of metal layer **106** or after removal of dummy wafer **102**.

An IPD or passive circuit is formed over dummy wafer **102**. Generally, the fabrication process is operated with peak process temperatures greater than 200 degrees Celsius (° C.), but can be lower than 200° C. The IPD circuit may include various passive devices such as capacitors, resistors, and inductors that are formed over a surface of dummy wafer **102**. Metal layer **106** is deposited over insulation layer **104**. Resistive layer **108** is deposited over metal layer **106** and insulation layer **104** and includes tantalum silicide (TaxSiy) or other metal silicides, TaN, nichrome (NiCr), TiN, or doped polysilicon. Dielectric layer **110** is deposited over resistive layer **108**. Dielectric layer **110** can be Si3N4, Ta2O5, hafnium oxide (HfO2), or a dielectric film material. In the present embodiment, resistive layer **108**, formed between dielectric layer **110** and metal layer **106**, is optional. The insulation layer **112** is deposited over insulation layer **104**, metal layer **106**, resistive layer **108**, and dielectric layer **110**. Metal layer **114** includes a conductive material and is deposited over insulation layer **112** using a PVD, CVD, electrolytic plating, or electroless plating process.

The combination of metal, insulation, dielectric, and resistive layers forms one or more passive devices over a surface of dummy wafer **102**. Box **122** shown on FIG. **3***a* indicates a resistor structure formed over dummy wafer **102** that includes portions of resistive layer **108** and metal layer **114**. Box **124** indicates a capacitor structure formed over dummy wafer **102** that includes portions of metal layer **106**, resistive layer **108**, dielectric layer **110**, and metal layer **114**. Portions of metal layers **106** and **114** form the electrodes of the capacitor indicated by box **124**. Box **126** indicates an inductor structure formed over dummy wafer **102** that includes portions of metal layer **114**. In alternative embodiments, different combinations of passive devices, RF circuitry, or other electronic circuits are formed over dummy wafer **102** to provide the necessary functionality of semiconductor package **100**. During the fabrication process, the IPD devices may be tested at wafer level to improve the yield of semiconductor package **100**. The insulation or passivation layer **116** is optionally deposited over dummy wafer **102** to provide electrical isolation and physical protection to semiconductor package **100**. The insulation layer **116** is patterned to expose portions of metal layer **114**.

Turning to FIG. **3***b*, metal posts **130** are formed over semiconductor package **100** and are electrically connected to metal layer **114**. Metal posts **130** may be formed using a selective plating process and may include conductive materials. Alternatively, metal posts **130** may be formed as stud bonded Al or Au bumps, or solder balls. Die **132** is mounted to metal layer **114** using conductive interconnects **134** such as metal bumps, conductive adhesive, conductive studs, or wirebonds. The height of a top surface of die **132** after mounting may be higher or lower than the height of a top surface of metal posts **130**. Wafer level molding compound **136** is deposited over semiconductor package **100** and around metal posts **130** and die **132**. Molding compound **136** includes a high resistivity material with a low loss tangent and matched CTE such as polymer (resin) matrix composite with fillers to adjust its mechanical, thermal, and electrical properties. For example, the loss tangent is less than 0.01 at RF frequency. Alternatively, molding compound **136** may be vacuum laminated LCP (liquid crystal polymer). Wafer molding compound **136** is optionally grinded or etched to a desired thickness. Depending upon the application, after grinding of wafer molding compound **136**, a top surface of metal posts **130** and top surface of die **132** may be exposed.

Turning to FIG. **3***c*, optional insulation layer **138** is deposited over molding compound **136** and patterned to expose

metal posts **130**. Optional metal layer **140** is deposited over the patterned regions of insulation layer **138** and is electrically connected to metal posts **130**. Bonding layer **142** with insulation properties is deposited over metal layer **140** and insulation layer **138**. Bonding layer **142** may be applied by spin coating, lamination, or printing. Core wafer **144** is mounted to bonding layer **142**. Core wafer **144** may include silicon or other semiconductor material. Depending upon application requirements, core **144** is background to a desired thickness. Generally, core **144** is background to a thickness 50-500 micrometers (μm). In one embodiment, the thickness of core **144** after backgrinding is between 50-200 μm. TSVs are formed in core **144** using a laser drilling, DRIE etching, or other etching process with typically IR alignment. The TSVs penetrate through core **144** and also etch portions of bonding layer **142** to expose metal layer **140** or metal post **130**. The insulation layer **146** is formed over core **144**. As shown on FIG. **3***c*, insulation layer **146** may be formed as a conformal surface over core **144**. Metal layer **148** is deposited over core **144** and into the TSVs. Metal layer **148** may be deposited conformally and fills the TSVs. An optional RDL may be formed over a surface of core **144**.

Turning to FIG. **3***d*, metal posts **150** are formed over core wafer **144** and are electrically connected to metal layer **148**. Metal posts **150** may be formed using a selective plating process. Alternatively, metal posts **150** may be formed as stud bonded Al or Au bumps, or solder balls. Die **152** are mounted to metal layer **148** using conductive interconnects **154** such as solder bumps, conductive adhesive, conductive studs, or wirebonds. The height of a top surface of die **152** after mounting may be higher or lower than the height of a top surface of metal posts **150**. Wafer level molding compound or lamination **156** is deposited over core **144** and around metal posts **150** and die **152**. Molding compound **156** may optionally include a high resistivity material with a low loss tangent and matched CTE such as polymer (resin) matrix composite with fillers to adjust its mechanical, thermal, and electrical properties. Depending upon the application, wafer molding compound **156** may optionally include a low loss tangent material. Wafer molding compound **156** is optionally grinded or etched to a desired thickness. Alternatively, molding compound **156** can be lamination LCP material. Depending upon the application, after grinding of wafer molding compound **156**, a top surface of metal posts **150** and top surfaces of die **152** may be exposed. Die **152** may include an optional backside compliant or insulation layer **158** and have a total thickness less than or equal to the height of metal posts **150**. At this point, an optional heat sink structure may be mounted over wafer molding compound **156** in contact with die **152**. The optional heat sink structure may be mounted with a heat sink adhesive material and facilitates the removal of heat energy from die **152**.

Turning to FIG. **3***e*, an optional interconnect structure is formed over metal posts **150** and die **152** for in-package interconnection and next-level interconnection. Metal layer **160** is deposited and patterned over metal posts **150** and die **152**. The insulation layer **162** is deposited over metal layer **160**. The insulation layer **162** may be patterned to expose portions of metal layer **160**.

Turning to FIG. **3***f*, dummy wafer **102** is removed using backgrinding and wet etching, CMP, plasma etching, thermal, light releasing process, or another etching process. Solder material is deposited over metal layer **106** and reflowed to form solder bumps **163**. Additional optional interconnect structures or external devices are connected to a top surface of package **100**. Die **164** is connected to metal layer **160** using electrical interconnects **166**. Free-air ball **168** of wirebond **170** is reflowed and connected to metal layer **160**. Semiconductor package **100** is singulated to form a plurality of separate semiconductor packages.

Using the present method, a semiconductor package is fabricated with a semiconductor core structure. The package includes an IPD structure built on a low-cost dummy Si or glass wafer, or recycled wafer. As described, the inductor portion of the IPD structure is formed away from the lossy, core structure by a high resistivity and low-loss tangent molding compound. In one embodiment, the distance between the inductor structure and the core structure is at least 50 μm. Die embedded within the package are connected to the core structure to minimize CTE mismatch forces generated within the semiconductor package. The core structure is located in a central region of the semiconductor package to further minimize warpage of the wafer and final package. The core structure also provides enhanced thermal conductivity for improved heat dissipation from the package.

FIG. **4** illustrates semiconductor package **200** including a core structure and cavity formed over the inductor portion of the IPD structure. Semiconductor package **200** includes insulation layer **204**. The deposition of insulation layer **204** involves CVD or thermal oxidation. The insulation layer **204** may be patterned before deposition of metal layer **206**.

An IPD circuit is formed using a fabrication process operated with peak process temperatures greater than 200° C. The IPD circuit may include various passive devices such as capacitors, resistors, and inductors. Metal layer **206** is deposited over insulation layer **204**. Resistive layer **208** is deposited over metal layer **206** and insulation layer **204** and includes TaxSiy or other metal silicides, TaN, NiCr, TiN, or doped polysilicon. Dielectric layer **210** is deposited over resistive layer **208**. Dielectric layer **210** can be Si3N4, Ta2O5, HfO2, or a dielectric film material. In the present embodiment, resistive layer **208**, formed between dielectric layer **210** and metal layer **206**, is optional. The insulation layer **212** is deposited over insulation layer **204**, metal layer **206**, resistive layer **208**, and dielectric layer **210**. Metal layer **214** includes a conductive material and is deposited over insulation layer **212** using a PVD, CVD, electrolytic plating, or electroless plating process.

Metal posts **230** are formed over semiconductor package **200** and are electrically connected to metal layer **214**. Metal posts **230** may be formed using a selective plating process. Die **232** is mounted to metal layer **214** using conductive interconnects **234** such as solder bumps, conductive adhesive, conductive studs, or wirebonds. The height of a top surface of die **232** after mounting may be higher or lower than the height of a top surface of metal posts **230**. Wafer level molding compound **236** is deposited over semiconductor package **200** and around metal posts **230** and die **232**. Molding compound **236** includes a high resistivity material with a low loss tangent and matched CTE such as polymer (resin) matrix composite with fillers to adjust its mechanical, thermal, and electrical properties. Wafer molding compound **236** is optionally grinded or etched to a desired thickness. Depending upon the application, after grinding of wafer molding compound **236**, a top surface of metal posts **230** and top surface of die **232** may be exposed.

The insulation layer **238** is deposited over molding compound **236** and patterned to expose metal posts **230**. Metal layer **240** is deposited over the patterned regions of insulation layer **238** and is electrically connected to metal posts **230**. Bonding layer **242** is deposited over metal layer **240** and insulation layer **238**. Bonding layer **242** may include an adhesive die-attach material. Core **244** is mounted to bonding layer **242**. Core **244** may include silicon or other semicon-

ductor material. Depending upon application requirements, core **244** is background to a desired thickness. Generally, core **244** is background to a thickness between 50-500 μm. In one embodiment, the thickness of core **244** after backgrinding is between 50-200 μm. TSVs are formed in core **244** using a laser drilling, laser etching, or other etching process. The TSVs penetrate through core **244** and also etch portions of bonding layer **242** to expose metal layer **240**. With reference to FIG. **4**, core **244** is further etched to form cavity **245**. Cavity **245** minimizes the volume of core **244** disposed over the inductor portion of metal layer **214**. The insulation layer **246** is formed over core **244**. Metal layer **248** is deposited over core **244** and into the TSVs. Metal layer **248** may be deposited conformally and fills the TSVs. An optional RDL may be formed over a surface of core **244**.

Metal posts **250** are formed over core **244** and are electrically connected to metal layer **248**. Metal posts **250** may be formed using a selective plating process. Die **252** are mounted to metal layer **248** using conductive interconnects **254** such as solder bumps, conductive adhesive, conductive studs, or wirebonds. The height of a top surface of die **252** after mounting may be higher or lower than the height of a top surface of metal posts **250**. Wafer level molding compound **256** is deposited over core **244**, into cavity **245** and around metal posts **250** and die **252**. Molding compound **256** may optionally include a high resistivity material with a low loss tangent and matched CTE. Depending upon the application, wafer molding compound **256** may optionally include a low loss tangent material. Wafer molding compound **256** is optionally grinded or etched to a desired thickness. Die **252** may include an optional backside compliant layer **258** and have a total thickness less than or equal to the height of metal posts **250**.

An optional interconnect structure is formed over metal posts **250** and die **252** for in-package interconnection and next-level interconnection. Metal layer **260** is deposited and patterned over metal posts **250** and die **252**. The insulation layer **262** is deposited over metal layer **260**. The insulation layer **262** may be patterned to expose portions of metal layer **260**.

Solder material is deposited over metal layer **206** and reflowed to form solder bumps **263**. Additional optional interconnect structure or external devices are connected to a top surface of semiconductor package **200**. Die **264** is connected to metal layer **260** using electrical interconnects **266**. Free-air ball **268** of wirebond **270** is reflowed and connected to metal layer **260**. Semiconductor package **200** is singulated to form a plurality of separate semiconductor packages.

FIG. **5** illustrates semiconductor package **300** including a core structure having pre-fabricated TSVs. Semiconductor package **300** includes insulation layer **304**. An IPD circuit is formed over insulation layer **304** using a fabrication process operated with peak process temperatures greater than 200° C. Metal layer **306** is deposited over insulation layer **304**. Resistive layer **308** is deposited over metal layer **306** and insulation layer **304**. Dielectric layer **310** is deposited over resistive layer **308**. In the present embodiment, resistive layer **308**, formed between dielectric layer **310** and metal layer **306**, is optional. The insulation layer **312** is deposited over insulation layer **304**, metal layer **306**, resistive layer **308**, and dielectric layer **310**. Metal layer **314** includes a conductive material and is deposited over insulation layer **312**.

Metal posts **330** are formed over semiconductor package **300** and are electrically connected to metal layer **314**. Die **332** is mounted to metal layer **314** using conductive interconnects **334** such as solder bumps, conductive adhesive, conductive studs, or wirebonds. The height of a top surface of die **332** after mounting may be higher or lower than the height of a top surface of metal posts **330**. Wafer level molding compound **336** is deposited over semiconductor package **300** and around metal posts **330** and die **332**. Molding compound **336** includes a high resistivity material with a low loss tangent and matched CTE. Wafer molding compound **336** is optionally grinded or etched to a desired thickness. Depending upon the application, after grinding of wafer molding compound **336**, a top surface of metal posts **330** and top surface of die **332** may be exposed.

The insulation layer **338** is deposited over molding compound **336** and patterned to expose metal posts **330**. Metal layer **340** is deposited over the patterned regions of layer **338** and is electrically connected to metal posts **330**. Bonding layer **342** is deposited over metal layer **340** and insulation layer **338**. Core **344** is mounted to metal layer **348** and optional insulation bonding layer **342**. The insulation layer **342** can be part of molding compound **356** by penetrating through empty dummy TSV structure. The metal layer **348** in core **344** is electrically connected with metal layer **340** or metal post **330**. Core **344** may include silicon or other semiconductor material. Before mounting, blind TSVs are preformed in core **344** using a laser drilling, DRIE, or other etching process. The TSVs penetrate partially into the front surface of core **344**. The insulation layer **346** is formed over core **344** and into the TSVs. Metal layer **348** is deposited over core **344** and into the TSVs. Metal layer **348** may be deposited conformally and fills the TSVs. Core **344** is mounted face-down to bonding layer **342**. Core **344** is background to a desired thickness to remove a back surface of core **344** and expose metal layer **348** of the TSVs. Generally, core **344** is background to a thickness between 50-500 μm. In one embodiment, the thickness of core **344** after backgrinding is between 50-200 μm. An optional RDL may be formed over a surface of core **344**. On top of metal layer **348**, additional process layer for electrical circuitry can be formed with other metal and insulation routing process before backgrinding to expose the TSV structure at wafer backside.

The insulation layer **349** is deposited and patterned over core **344** to expose metal layer **348**. Metal posts **350** are formed over core **344** and are electrically connected to metal layer **348**. Metal posts **350** may be formed using a selective plating process. Die **352** are mounted to metal layer **348** using conductive interconnects **354**. Wafer level molding compound **356** is deposited over core **344**, around metal posts **350** and die **352**. Molding compound **356** may optionally include a high resistivity material with a low loss tangent and matched CTE. Wafer molding compound **356** is optionally grinded or etched to a desired thickness. Die **352** may include an optional backside compliant layer **358** and have a total thickness less than or equal to the height of metal posts **350**.

An optional interconnect structure is formed over metal posts **350** and die **352** for in-package interconnection and next-level interconnection. Metal layer **360** is deposited and patterned over metal posts **350** and die **352**. The insulation layer **362** is deposited over metal layer **360**. The insulation layer **362** may be patterned to expose portions of metal layer **360**.

Solder material is deposited over metal layer **306** and reflowed to form solder bumps **363**. Additional optional interconnect structures or external devices are connected to a top surface of semiconductor package **300**. Die **364** is connected to metal layer **360** using electrical interconnects **366**. Free-air ball **368** of wirebond **370** is reflowed and connected to metal layer **360**. Semiconductor package **300** is singulated to form a plurality of separate semiconductor packages.

FIG. **6** illustrates semiconductor package **400** including a core structure and dummy die mounted over the IPD struc-

ture. Semiconductor package **400** includes insulation layer **404**. An IPD circuit is formed over insulation layer **404** using a fabrication process operated with peak process temperatures greater than 200° C. Metal layer **406** is deposited over insulation layer **404**. Resistive layer **408** is deposited over metal layer **406** and insulation layer **404**. Dielectric layer **410** is deposited over resistive layer **408**. Resistive layer **408** is optionally formed between dielectric layer **410** and metal layer **406**. The insulation layer **412** is deposited over insulation layer **404**, metal layer **406**, resistive layer **408**, and dielectric layer **410**. Metal layer **414** includes a conductive material and is deposited over insulation layer **412**.

Metal posts **430** are formed over semiconductor package **400** and are electrically connected to metal layer **414**. Die **432** is mounted to metal layer **414** using conductive interconnects **434**. The height of a top surface of die **432** after mounting may be higher or lower than the height of a top surface of metal posts **430**. Dummy die **433** is mounted over metal layer **414** using die-attach adhesive **435**. Dummy die **433** includes a high resistivity material and is mounted over the inductor portion of metal layer **414** to balance the CTE throughout semiconductor package **400** and to control warpage of the package. Dummy die **433** may include a high resistivity single-crystal material or a multi-crystal material. Dummy die **433** may be used to balance the wafer to control the wafer warpage in the process. The height of a top surface of dummy die **433** after mounting may be higher or lower than the height of a top surface of metal posts **430**. Wafer level molding compound **436** is deposited over semiconductor package **400** and around metal posts **430**, die **432**, and dummy die **433**. Molding compound **436** includes a high resistivity material with a low loss tangent and matched CTE. Wafer molding compound **436** is optionally grinded or etched to a desired thickness. Depending upon the application, after grinding of wafer molding compound **436**, a top surface of metal posts **430** and top surface of die **432** or dummy die **433** may be exposed.

The insulation layer **438** is deposited over molding compound **436** and patterned to expose metal posts **430**. Metal layer **440** is deposited over the patterned regions of insulation layer **438** and is electrically connected to metal posts **430**. Bonding layer **442** is deposited over metal layer **440** and insulation layer **438**. Bonding layer **442** may include an adhesive die-attach material. Core wafer **444** is mounted to bonding layer **442**. Core wafer **444** may include silicon or other semiconductor material. Depending upon application requirements, core **444** is background to a desired thickness. Generally, core **444** is background to a thickness between 50-500 μm. In one embodiment, the thickness of core **444** after backgrinding is between 50-200 μm. TSVs are formed in core **444** using a laser drilling, laser etching, or other etching process. The TSVs penetrate through core **444** and also etch portions of bonding layer **442** to expose metal layer **440**. The insulation layer **446** is formed over core **444**. Metal layer **448** is deposited over core **444** and into the TSVs. Metal layer **448** may be deposited conformally and fills the TSVs. An optional RDL may be formed over a surface of core **444**.

Metal posts **450** are formed over core **444** and are electrically connected to metal layer **448**. Metal posts **450** may be formed using a selective plating process. Die **452** are mounted to metal layer **448** using conductive interconnects **454**. The height of a top surface of die **452** after mounting may be higher or lower than the height of a top surface of metal posts **450**. Wafer level molding compound **456** is deposited over core **444** around metal posts **450** and die **452**. Molding compound **456** may optionally include a high resistivity material with a low loss tangent and matched CTE. Wafer molding compound **456** is optionally grinded or etched to a desired thickness. Die **452** may include an optional backside compliant layer **458** and have a total thickness less than or equal to the height of metal posts **450**.

An optional interconnect structure is formed over metal posts **450** and die **452** for in-package interconnection and next-level interconnection. Metal layer **460** is deposited and patterned over metal posts **450** and die **452**. The insulation layer **462** is deposited over metal layer **460**. The insulation layer **462** may be patterned to expose portions of metal layer **460**.

Solder material is deposited over metal layer **406** and reflowed to form solder bumps **463**. Additional optional interconnect structures or external devices are connected to a top surface of semiconductor package **400**. Die **464** is connected to metal layer **460** using electrical interconnects **466**. Free-air ball **468** of wirebond **470** is reflowed and connected to metal layer **460**. Semiconductor package **400** is singulated to form a plurality of separate semiconductor packages.

FIG. **7** illustrates semiconductor package **500** including a core structure and die mounted to the IPD structure and electrically connected to the core structure. Semiconductor package **500** includes insulation layer **504**. An IPD circuit is formed over insulation layer **504** using a fabrication process operated with peak process temperatures greater than 200° C. Metal layer **506** is deposited over insulation layer **504**. Resistive layer **508** is deposited over metal layer **506** and insulation layer **504**. Dielectric layer **510** is deposited over resistive layer **508**. Resistive layer **508** is optionally formed between dielectric layer **510** and metal layer **506**. The insulation layer **512** is deposited over insulation layer **504**, metal layer **506**, resistive layer **508**, and dielectric layer **510**. Metal layer **514** includes a conductive material and is deposited over insulation layer **512**.

Metal posts **530** are formed over semiconductor package **500** and are electrically connected to metal layer **514**. A backside of die **532** is mounted to semiconductor package **500** using pre-built adhesive layer **533**. An optional underfill or die attach adhesive **535** may be deposited beneath die **532** to secure die **532** to semiconductor package **500**. Die **532** is electrically connected to core **544** by electrical interconnects **534**. The interconnects **534** may include solder bumps, conductive adhesive, stud bumps, wirebonds, or other conductive connection. Wafer level molding compound **536** is deposited over semiconductor package **500** and around metal posts **530** and die **532**. Molding compound **536** includes a high resistivity material with a low loss tangent and matched CTE. Wafer molding compound **536** is optionally grinded or etched to a desired thickness. Depending upon the application, after grinding of wafer molding compound **536**, a top surface of metal posts **530** and top surface of die **532** may be exposed.

Bonding layer **542** with adhesive and insulation property is deposited over wafer molding compound **536**. Bonding layer **542** may be applied by spin coating, lamination, or printing. Core **544** is mounted to bonding layer **542**. Core **544** may include silicon or other semiconductor material. Depending upon application requirements, core **544** is background to a desired thickness. Generally, core **544** is background to a thickness between 50-500 μm. In one embodiment, the thickness of core **544** after backgrinding is between 50-200 μm. TSVs are formed in core **544** using a laser drilling, laser etching, or other etching process. The TSVs penetrate through core **544** and also etch portions of bonding layer **542** to expose metal posts **530**. The insulation layer **546** is formed over core **544**. Metal layer **548** is deposited over core **544** and

into the TSVs. Metal layer **548** may be deposited conformally and fills the TSVs. An optional RDL may be formed over a surface of core **544**.

Metal posts **550** are formed over core **544** and are electrically connected to metal layer **548**. Metal posts **550** may be formed using a selective plating process. Die **552** are mounted to metal layer **548** using conductive interconnects **554**. The height of a top surface of die **552** after mounting may be higher or lower than the height of a top surface of metal posts **550**. Wafer level molding compound **556** is deposited over core **544** around metal posts **550** and die **552**. Molding compound **556** may optionally include a high resistivity material with a low loss tangent and matched CTE. Wafer molding compound **556** is optionally grinded or etched to a desired thickness. Die **552** may include an optional backside compliant layer **558** and have a total thickness less than or equal to the height of metal posts **550**.

An optional interconnect structure is formed over metal posts **550** and die **552** for in-package interconnection and next-level interconnection. Metal layer **560** is deposited and patterned over metal posts **550** and die **552**. The insulation layer **562** is deposited over metal layer **560**. The insulation layer **562** may be patterned to expose portions of metal layer **560**.

Solder material is deposited over metal layer **506** and reflowed to form solder bumps **563**. Additional optional interconnect structures or external devices are connected to a top surface of semiconductor package **500**. Die **564** is connected to metal layer **560** using electrical interconnects **566**. Free-air ball **568** of wirebond **570** is reflowed and connected to metal layer **560**. Semiconductor package **500** is singulated to form a plurality of separate semiconductor packages.

FIG. **8** illustrates semiconductor package **600** including a core structure having TSVs and die mounted to the IPD structure, the die including a pre-built insulation layer. Semiconductor package **600** includes insulation layer **604**. An IPD circuit is formed over insulation layer **604** using a fabrication process operated with peak process temperatures typically greater than 200° C. Metal layer **606** is deposited over insulation layer **604**. Resistive layer **608** is deposited over metal layer **606** and insulation layer **604**. Dielectric layer **610** is deposited over resistive layer **608**. Resistive layer **608** is optionally formed between dielectric layer **610** and metal layer **606**. The insulation layer **612** is deposited over insulation layer **604**, metal layer **606**, resistive layer **608**, and dielectric layer **610**. Metal layer **614** includes a conductive material and is deposited over insulation layer **612**.

Metal posts **630** are formed over semiconductor package **600** and are electrically connected to metal layer **614**. Die **632** is mounted to metal layer **614** using conductive interconnects **634**. The interconnects **634** may include solder bumps, conductive adhesive, stud bumps, wirebonds, or other conductive connection. An optional pre-built insulation layer **633** is formed over die **632**. The insulation layer **633** pre-built at the backside of die **632** may include SiO2, SiO2/Si3N4, or polymer insulation material. Wafer level molding compound **636** is deposited over semiconductor package **600** and around metal posts **630** and die **632**. Molding compound **636** includes a high resistivity material with a low loss tangent and matched CTE. Wafer molding compound **636** is optionally grinded or etched to a desired thickness. Depending upon the application, after grinding of wafer molding compound **636**, a top surface of metal posts **630** and top surface of die **632** may be exposed.

Bonding layer **642** is deposited over wafer molding compound **636** and backside of die **632**. Bonding layer **642** may include a permanent bonding insulation materials deposited by spin coating, lamination, or printing. Core **644** is mounted to bonding layer **642**. Core **644** may include silicon or other semiconductor material. Depending upon application requirements, core **644** is background to a desired thickness. Generally, core **644** is background to a thickness between 50-500 μm. In one embodiment, the thickness of core **644** after backgrinding is between 50-200 μm. TSVs are formed in core **644** using a laser drilling, DRIE, or other etching process. The TSVs penetrate through core **644** and also etch portions of bonding layer **642** to expose metal posts **630**. The insulation layer **646** is formed over core **644**. Metal layer **648** is deposited over core **644** and into the TSVs. Metal layer **648** may be deposited conformally and fills the TSVs. An optional RDL may be formed over a surface of core **644**.

Metal posts **650** are formed over core **644** and are electrically connected to metal layer **648**. Metal posts **650** may be formed using a selective plating process. Die **652** are mounted to metal layer **648** using conductive interconnects **654**. Die **652** may include an optional backside compliant and insulation layer **658** and have a total thickness less than or equal to the height of metal posts **650** in the process. Wafer level molding compound **656** is deposited over core **644** around metal posts **650** and die **652**. Molding compound **656** may optionally include a high resistivity material with a low loss tangent and matched CTE. Wafer molding compound **656** is optionally grinded or etched to a desired thickness.

An optional interconnect structure is formed over metal posts **650** and die **652** for in-package interconnection and next-level interconnection. Metal layer **660** is deposited and patterned over metal posts **650** and die **652**. The insulation layer **662** is deposited over metal layer **660**. The insulation layer **662** may be patterned to expose portions of metal layer **660**.

Solder material is deposited over metal layer **606** and reflowed to form solder bumps **663**. Additional optional interconnect structures or external devices are connected to a top surface of semiconductor package **600**. Die **664** is connected to metal layer **660** using electrical interconnects **666**. Free-air ball **668** of wirebond **670** is reflowed and connected to metal layer **660**. Semiconductor package **600** is singulated to form a plurality of separate semiconductor packages.

FIG. **9** illustrates semiconductor package **700** including a core structure having TSVs and an RDL interconnection formed over the core structure. Semiconductor package **700** includes insulation layer **704**. An IPD circuit is formed over insulation layer **704** using a fabrication process operated with peak process temperatures greater than 200° C. Metal layer **706** is deposited over insulation layer **704**. Resistive layer **708** is deposited over metal layer **706** and insulation layer **704**. Dielectric layer **710** is deposited over resistive layer **708**. Resistive layer **708** is optionally formed between dielectric layer **710** and metal layer **706**. The insulation layer **712** is deposited over insulation layer **704**, metal layer **706**, resistive layer **708**, and dielectric layer **710**. Metal layer **714** includes a conductive material and is deposited over insulation layer **712**.

Metal posts **730** are formed over semiconductor package **700** and are electrically connected to metal layer **714**. Die **732** is mounted to metal layer **714** using conductive interconnects **734**. The interconnects **734** may include solder bumps, conductive adhesive, stud bumps, wirebonds, or other conductive connection. Wafer level molding compound **736** is deposited over semiconductor package **700** and around metal posts **730** and die **732**. Molding compound **736** includes a high resistivity material with a low loss tangent and matched CTE. Wafer molding compound **736** is optionally grinded or etched to a desired thickness. Depending upon the application, after

grinding of wafer molding compound **736**, a top surface of metal posts **730** and top surface of die **732** may be exposed.

The insulation layer **738** is deposited over molding compound **736** and patterned to expose metal posts **730**. Metal layer **740** is deposited over the patterned regions of insulation layer **738** and is electrically connected to metal posts **730**. Bonding layer **742** with insulation property is deposited over metal layer **740** and insulation layer **738**. Bonding layer **742** may be applied by spin coating, lamination, or printing. Core **744** is mounted to bonding layer **742**. Core **744** may include silicon or other semiconductor material. Core **744** may also include high resistivity Si materials with surface passivation. Depending upon application requirements, core **744** is background to a desired thickness. Generally, core **744** is background to a thickness between 50-500 μm. In one embodiment, the thickness of core **744** after backgrinding is between 50-200 μm. TSVs are formed in core **744** using a laser drilling, laser etching, or other etching process. The TSVs penetrate through core **744** and also etch portions of bonding layer **742** to expose metal layer **740**. The insulation layer **746** is formed over core **744**. Metal layer **748** is deposited over core **744** and into the TSVs. Metal layer **748** may be deposited conformally and fills the TSVs. An RDL interconnection is formed over a surface of core **744**. RDL interconnection may include passive circuitry as well, such as capacitor, resistor and inductor. As an example, insulation layer **747** is deposited over core **744** and patterned to expose metal layer **748**. Metal layer **749** is deposited over insulation layer **747** and provides for re-routing electrical connections over a surface of core **744** within semiconductor package **700**.

Metal posts **750** are formed over core **744** and are electrically connected to metal layer **749**. Metal posts **750** may be formed using a selective plating process. Die **752** are mounted to metal layer **749** using conductive interconnects **754**. Die **752** may include an optional backside compliant layer **758** and have a total thickness less than or equal to the height of metal posts **750**. Wafer level molding compound **756** is deposited over core **744** around metal posts **750** and die **752**. Molding compound **756** may optionally include a high resistivity material with a low loss tangent and matched CTE. Wafer molding compound **756** is optionally grinded or etched to a desired thickness.

An optional interconnect structure is formed over metal posts **750** and die **752** for in-package interconnection and next-level interconnection. Metal layer **760** is deposited and patterned over metal posts **750** and die **752**. The insulation layer **762** is deposited over metal layer **760**. The insulation layer **762** may be patterned to expose portions of metal layer **760**.

Solder material is deposited over metal layer **706** and reflowed to form solder bumps **763**. Additional optional interconnect structures or external devices are connected to a top surface of semiconductor package **700**. Die **764** is connected to metal layer **760** using electrical interconnects **766**. Free-air ball **768** of wirebond **770** is reflowed and connected to metal layer **760**. Semiconductor package **700** is singulated to form a plurality of separate semiconductor packages.

FIGS. **10***a*-**10***e* illustrate a method of forming semiconductor package **800** having an embedded semiconductor core with pre-fabricated conductive TSVs. As shown in FIG. **10***a*, dummy wafer **802** is made with silicon or other semiconductor or rigid material. The insulation layer **804** is optionally formed over dummy wafer **802** and is typically made with Sio2, but can also be made with Si3N4, SiON, Ta2O5, ZrO2, Al2O3, or other material having dielectric properties. The deposition of insulation layer **804** involves CVD, or thermal oxidation. The insulation layer **804** may be patterned before deposition of metal layer **806** or after removal of dummy wafer **802**.

An IPD or passive circuit is formed over dummy wafer **802**. Generally the fabrication process is operated with peak process temperatures greater than 200° C. The IPD circuit may include various passive devices such as capacitors, resistors, and inductors that are formed over a surface of dummy wafer **802**. Metal layer **806** is deposited over insulation layer **804**. Resistive layer **808** is deposited over metal layer **806** and insulation layer **804** and includes TaxSiy or other metal silicides, TaN, NiCr, TiN, or doped polysilicon. Dielectric layer **810** is deposited over resistive layer **808**. Dielectric layer **810** can be Si3N4, Ta2O5, HfO2, or a dielectric film material. In the present embodiment, resistive layer **808**, formed between dielectric layer **810** and metal layer **806**, is optional. The insulation layer **812** is deposited over insulation layer **804**, metal layer **806**, resistive layer **808**, and dielectric layer **810**. Metal layer **814** includes a conductive material and is deposited over insulation layer **812** using a PVD, CVD, electrolytic plating, or electroless plating process.

The combination of metal, insulation, dielectric, and resistive layers forms one or more passive devices over a surface of dummy wafer **802**. Box **822** shown on FIG. **10***a* indicates a resistor structure formed over dummy wafer **802** that includes portions of resistive layer **808** and metal layer **814**. Box **824** indicates a capacitor structure formed over dummy wafer **802** that includes portions of metal layer **806**, resistive layer **808**, dielectric layer **810**, and metal layer **814**. Portions of metal layers **806** and **814** form the electrodes of the capacitor indicated by box **824**. Box **826** indicates an inductor structure formed over dummy wafer **802** that includes portions of metal layer **814**. In alternative embodiments, different combinations of passive devices, RF circuitry, or other electronic circuits are formed over dummy wafer **802** to provide the necessary functionality of semiconductor package **800**. During the fabrication process, the IPD devices may be tested at wafer level to improve the yield of semiconductor package **800**. The insulation or passivation layer **816** is optionally deposited over dummy wafer **802** to provide electrical isolation and physical protection to semiconductor package **800**. The insulation layer **816** is patterned to expose portions of metal layer **814**.

Metal posts **830** are formed over semiconductor package **800** and are electrically connected to metal layer **814**. Metal posts **830** may be formed using a selective plating process and may include conductive materials. Alternatively, metal posts **830** may be formed as stud bonded Al or Au bumps, or solder balls.

Turning to FIG. **10***b*, die **832** is mounted to metal layer **814** using conductive interconnects **834** such as solder bumps, conductive adhesive, conductive studs, or wirebonds. Depending upon design requirement, die **832** may be mounted anywhere over dummy wafer **802**. The height of a top surface of die **832** after mounting may be higher or lower than the height of a top surface of metal posts **830**. Wafer level molding compound **836** is deposited over semiconductor package **800** and around metal posts **830** and die **832**. Molding compound **836** includes a high resistivity material with a low loss tangent and matched CTE such as polymer (resin) matrix composite with fillers to adjust its mechanical, thermal, and electrical properties. Wafer molding compound **836** is optionally grinded or etched to a desired thickness. Depending upon the application, after grinding of wafer molding compound **836**, a top surface of metal posts **830** and top surface of die **832** may be exposed.

Turning to FIG. **10***c*, insulation layer **838** is deposited over molding compound **836** and patterned to expose metal posts **830**. The insulation layer **838** is optional and is not deposited if metal layer **840** is not overlapping die **832**, or is used as a heat sink for die **832**. Metal layer **840** is deposited over the patterned regions of insulation layer **838** and is electrically connected to metal posts **830**. Metal layer **840** may form various circuit components including ground planes, coupling lines, power lines, and interconnects. Optional insulation layer **842** is deposited over metal layer **840** and insulation layer **838**. The insulation layer **842** is not deposited, for example, if there are stacked metal layers formed within metal layer **840** to define input/output pad size. As another embodiment, metal layer **840** and insulation layer **838** is not in package **800**. Core **844** is directly flip-chipped over metal post **830**.

Core die **844** is mounted to metal layer **840** using electrical interconnects **845**. The interconnects **845** may include solder bumps, stud bumps, wirebonds, or other electrical interconnect devices. Core die **844** may include silicon or other semiconductor material. Core **844** includes pre-fabricated conductive vias. Before mounting, TSVs are formed in core **844** using a laser drilling, DRIE, or other etching process. The TSVs are blind vias and only penetrate partially into core die **844**. The insulation layer **846** is formed over core **844** and into the vias. As shown on FIG. **10***c*, insulation layer **846** may be formed as a conformal surface over core **844**. Metal is deposited over core **844** and into the TSVs to form conductive vias **848**. An optional RDL interconnection may be formed over the surface of core **844**. The RDL may include both interconnect layer and passive circuitry including for example capacitor, resistor, and inductors. Alternatively, it may be only for redistribution purpose. For example, layer **849** is formed over a surface of core **844** and includes a conductive material. Core die **844** is inverted and flip chip mounted to semiconductor package **800**. Wafer molding compound or molded underfill **851** is deposited over and around core **844** using wafer level molding, or other deposition processes, such as LCP material lamination.

Turning to FIG. **10***d*, core **844** and wafer molding compound **851** are background to expose conductive vias **848** and to thin core **844** to a desired thickness. Generally, core **844** is background to a thickness between 50-500 μm. In one embodiment, the thickness of core **844** after backgrinding is between 50-200 μm. An optional RDL or interconnect structure is formed over the backside of core **844**. The insulation layer **852** is deposited and patterned over wafer molding compound **851** and core **844** to expose portions of conductive vias **848**. Metal layer **854** is deposited over insulation layer **852** and is electrically connected to conductive vias **848**. The insulation layer **856** is deposited and patterned over metal layer **854**.

Turning to FIG. **10***e*, die **858** are mounted over and electrically connected to core **844** using conductive interconnects **860**. The interconnects **860** may include solder bumps, conductive adhesive, conductive studs, or wirebonds. Molding compound **862** is deposited over and around die **858**. Dummy wafer **802** is removed using thermal, chemical, mechanical, plasma etching methods, or other wafer-removal processes. Alternatively, dummy wafer **802** may be removed after the molding process for layer **851**. Electrical interconnects **864** are formed over semiconductor package **800** and connected to metal layer **806**. Electrical interconnects **864** may include solder bumps, stud bumps, or wirebonds.

FIG. **11** illustrates semiconductor package **900** having a semiconductor core with pre-fabricated conductive TSVs and die mounted over an IPD structure of semiconductor package **900**. Semiconductor package **900** includes insulation layer **904**. An IPD circuit is formed within semiconductor package **900**. Generally the fabrication process is operated with peak process temperatures greater than 200° C. The IPD circuit may include various passive devices such as capacitors, resistors, and inductors.

As shown on FIG. **11**, metal layer **906** is deposited over insulation layer **904**. Resistive layer **908** is deposited over metal layer **906** and insulation layer **904** and includes TaxSiy or other metal silicides, TaN, NiCr, TiN, or doped polysilicon. Dielectric layer **910** is deposited over resistive layer **908**. In the present embodiment, resistive layer **908**, formed between dielectric layer **910** and metal layer **906**, is optional. The insulation layer **912** is deposited over insulation layer **904**, metal layer **906**, resistive layer **908**, and dielectric layer **910**. Metal layer **914** includes a conductive material and is deposited over insulation layer **912** using a PVD, CVD, electrolytic plating, or electroless plating process.

Metal posts **930** are formed over semiconductor package **900** and are electrically connected to metal layer **914**. Metal posts **930** may be formed using a selective plating process and may include conductive materials. Alternatively, metal posts **930** may be formed as stud bonded Al or Au bumps, or solder balls.

A backside of die **932** is mounted to semiconductor package **900** using adhesive or die-attach material **935**. Die **932** is electrically connected to core **944** by electrical interconnects **934**. The interconnects **934** may include solder bumps, conductive adhesive, stud bumps, wirebonds, or other conductive connection. Depending upon the application, before mounting, die **932** may be background to a preferred thickness. Wafer level molding compound **936** is deposited over semiconductor package **900** and around metal posts **930** and die **932**. Wafer level molding compound **936** is deposited over semiconductor package **900** and around metal posts **930** and die **932**. Molding compound **936** includes a high resistivity material with a low loss tangent and matched CTE such as polymer (resin) matrix composite with fillers to adjust its mechanical, thermal, and electrical properties. Wafer molding compound **936** is optionally grinded or etched to a desired thickness. Depending upon the application, after grinding of wafer molding compound **936**, a top surface of metal posts **930** and top surface of die **932** may be exposed.

Metal layer **940** is deposited over wafer molding compound **936** and is electrically connected to metal posts **930**. Metal layer **940** may form various circuit components including ground planes, coupling lines, power lines, and interconnects. Optional insulation layer or die-attach layer **942** is deposited and patterned over metal layer **940**. Alternatively, both layer **942** and **940** is not presented with core **944** is directly connected with metal **930** through interconnects **945**.

Core **944** is mounted to metal layer **940** using electrical interconnects **945**. The interconnects **945** may include solder bumps, stud bumps, wirebonds, or other electrical interconnect devices. Core **944** may include silicon or other semiconductor material. Core **944** includes pre-fabricated conductive vias. Before mounting, TSVs are formed in core **944** using a laser drilling, DRIE, or other etching process. The TSVs penetrate into core **944**. The insulation layer **946** is formed over core **944** and into the vias. The insulation layer **946** may be formed as a conformal surface over core **944**. Metal is deposited over core **944** and into the TSVs to form conductive vias **948**. If conductive vias **948** are blind, a portion of the back surface of core **944** may be removed to expose conductive vias **948** on both sides of core **944**. Optional RDLs are formed over both surfaces of core **944**. RDL **949** is formed over a first surface of core **944** and includes a conductive

material. A second RDL or interconnect structure is formed over a second surface of core **944**. The insulation layer **952** is deposited and patterned over core **944** to expose portions of conductive vias **948**. Metal layer **954** is deposited over insulation layer **952** and is electrically connected to conductive vias **948**. The insulation layer **956** is deposited and patterned over metal layer **954**. Core **944** is mounted to semiconductor package **900**.

Die **958** are mounted over and electrically connected to core **944** using conductive interconnects **960**. The interconnects **960** may include solder bumps, conductive adhesive, conductive studs, or wirebonds. Molding compound **962** is deposited over and around die **958**. Electrical interconnects **964** are formed over semiconductor package **900** and connected to metal layer **906**. Electrical interconnects **964** may include solder bumps, stud bumps, or wirebonds.

FIG. **12** illustrates semiconductor package **1000** having a semiconductor core with pre-fabricated conductive TSVs and dummy vias. Semiconductor package **1000** includes insulation layer **1004**. An IPD circuit is formed within semiconductor package **1000**. Generally the fabrication process is operated with peak process temperatures greater than 200° C. The IPD circuit may include various passive devices such as capacitors, resistors, and inductors.

As shown on FIG. **12**, metal layer **1006** is deposited over insulation layer **1004**. Resistive layer **1008** is deposited over metal layer **1006** and insulation layer **1004** and includes TaxSiy or other metal silicides, TaN, NiCr, TiN, or doped polysilicon. Dielectric layer **1010** is deposited over resistive layer **1008**. In the present embodiment, resistive layer **1008**, formed between dielectric layer **1010** and metal layer **1006**, is optional. The insulation layer **1012** is deposited over insulation layer **1004**, metal layer **1006**, resistive layer **1008**, and dielectric layer **1010**. Metal layer **1014** includes a conductive material and is deposited over insulation layer **1012** using a PVD, CVD, electrolytic plating, or electroless plating process.

Metal posts **1030** are formed over semiconductor package **1000** and are electrically connected to metal layer **1014**. Metal posts **1030** may be formed using a selective plating process and may include conductive materials. Alternatively, metal posts **1030** may be formed as stud bonded Al or Au bumps, or solder balls.

A backside of die **1032** is mounted to semiconductor package **1000** using adhesive or die-attach material **1035**. Die **1032** is electrically connected to core **1044** by electrical interconnects **1034**. The interconnects **1034** may include solder bumps, conductive adhesive, stud bumps, wirebonds, or other conductive connection. Wafer level molding compound **1036** is deposited over semiconductor package **1000** and around metal posts **1030** and die **1032**. Molding compound **1036** includes a high resistivity material with a low loss tangent and matched CTE such as polymer (resin) matrix composite with fillers to adjust its mechanical, thermal, and electrical properties. Wafer molding compound **1036** is optionally grinded or etched to a desired thickness. Depending upon the application, after grinding of wafer molding compound **1036**, a top surface of metal posts **1030** and top surface of die **1032** may be exposed.

Metal layer **1040** is deposited over wafer molding compound **1036** and is electrically connected to metal posts **1030**. Metal layer **1040** may form various circuit components including ground planes, coupling lines, power lines, and interconnects. Optional insulation layer **1042** is deposited and patterned over metal layer **1040**.

Core **1044** is mounted to metal layer **1040** using electrical interconnects **1045**. The interconnects **1045** may include solder bumps, stud bumps, wirebonds, or other electrical interconnect devices. Core **1044** may include silicon or other semiconductor material. Core **1044** includes pre-fabricated conductive vias. Before mounting, TSVs and dummy vias are formed in core **1044** using a laser drilling, laser etching, or other etching process. The TSVs are blind vias and only penetrate partially into core **1044**. The insulation layer **1046** is formed over core **1044** and into the vias. As shown on FIG. **12**, insulation layer **1046** may be formed as a conformal surface over core **1044**. Metal is deposited over core **1044** and into some of the TSVs (not including the dummy vias) to form conductive vias **1048**. An optional RDL **1049** is formed over a surface of core **1044** and includes a conductive material. Core **1044** is inverted and flip chip mounted to semiconductor package **1000**. Wafer molding compound or molded underfill **1051** is deposited over and around core **1044** using wafer level molding, or other deposition processes. A portion of wafer molding compound **1051** is deposited into the dummy wafers of core **1044** to enhance the strength of the physical connection between core **1044** and the other components of semiconductor package **1000**.

Core **1044** and wafer molding compound are background to expose conductive vias **1048** and to thin core **1044** to a desired thickness. Generally, core **1044** is background to a thickness between 50-500 μm. In one embodiment, the thickness of core **1044** after backgrinding is between 50-200 μm. An optional RDL or interconnect structure is formed over core **1044**. The insulation layer **1052** is deposited and patterned over wafer molding compound **1051** and core **1044** to expose portions of conductive vias **1048**. Metal layer **1054** is deposited over insulation layer **1052** and is electrically connected to conductive vias **1048**. The insulation layer **1056** is deposited and patterned over metal layer **1054**.

Die **1058** are mounted over and electrically connected to core **1044** using conductive interconnects **1060**. The interconnects **1060** may include solder bumps, conductive adhesive, conductive studs, or wirebonds. Molding compound **1062** is deposited over and around die **1058**. Electrical interconnects **1064** are formed over semiconductor package **1000** and connected to metal layer **1006**. Electrical interconnects **1064** may include solder bumps, stud bumps, or wirebonds.

While one or more embodiments of the present invention have been illustrated in detail, the skilled artisan will appreciate that modifications and adaptations to those embodiments may be made without departing from the scope of the present invention as set forth in the following claims.

What is claimed:

1. A semiconductor device, comprising:

a temporary carrier for supporting the semiconductor device;

an integrated passive device (IPD) structure disposed over the temporary carrier, the IPD structure including an inductor, resistor, or capacitor;

a plurality of first conductive posts disposed over the temporary carrier;

a first semiconductor die mounted to the IPD structure with a flipchip interconnect;

a first wafer molding compound deposited over the first conductive posts and first semiconductor die;

a core structure bonded to the first conductive posts over the first semiconductor die, the core structure including a silicon material;

a plurality of conductive through silicon vias (TSVs) disposed in the core structure;

a first redistribution layer disposed over the core structure;

a plurality of second conductive posts disposed over the core structure;

a second semiconductor die mounted over the core structure with a flipchip interconnect, the second semiconductor die being electrically connected to the core structure;

a second wafer molding compound deposited over the second conductive posts and the second semiconductor die; and

a second redistribution layer disposed over the second molding compound and second semiconductor die.

2. The semiconductor device of claim **1**, wherein the first wafer molding compound comprises:

a polymer material having a loss tangent less than 0.01; and

fillers to match a coefficient of thermal expansion of the semiconductor device.

3. The semiconductor device of claim **1**, further comprising an electrical interconnect structure connected to the second conductive posts.

4. The semiconductor device of claim **1**, further comprising a dummy die mounted over the IPD structure.

5. The semiconductor device of claim **4**, the dummy die comprising a single-crystal material.

6. The semiconductor device of claim **4**, the dummy die comprising a multi-crystal wafer material.

7. The semiconductor device of claim **1**, further comprising conductive interconnects that electrically connect the first semiconductor die to the IPD structure.

8. A semiconductor device, comprising:

an integrated passive device (IPD) structure;

a first semiconductor die mounted to the IPD structure with a flipchip interconnect;

a plurality of first conductive posts disposed adjacent to the first semiconductor die;

a first molding compound disposed over the first conductive posts and first semiconductor die;

a core structure bonded to the first conductive posts over the first semiconductor die;

a plurality of conductive through silicon vias (TSVs) disposed in the core structure;

a plurality of second conductive posts disposed over the core structure;

a second semiconductor die mounted over the core structure, the second semiconductor die electrically connected to the core structure; and

a second molding compound disposed over the second conductive posts and second semiconductor die.

9. The semiconductor device of claim **8**, further comprising:

a first redistribution layer disposed over the core structure; and

a second redistribution layer disposed over the second molding compound and second semiconductor die.

10. The semiconductor device of claim **9**, wherein the conductive TSVs are electrically connected to the first redistribution layer over the first conductive posts and first semiconductor die.

11. The semiconductor device of claim **8**, further comprising an electrical interconnect structure electrically connected to the second conductive posts.

12. The semiconductor device of claim **8**, further comprising a dummy die mounted over the IPD structure, the dummy die comprising a single-crystal material or a multi-crystal wafer material.

13. The semiconductor device of claim **8**, further comprising a temporary carrier, the IPD structure mounted over the temporary carrier.

14. A semiconductor device, comprising:

an integrated passive device (IPD) structure;

a first semiconductor die mounted to the IPD structure;

a plurality of first conductive posts disposed over the IPD structure and outside a footprint of the first semiconductor die;

a first molding compound deposited over the first conductive posts, IPD structure, and first semiconductor die; and

a wafer core structure bonded to the first conductive posts over the first semiconductor die, the wafer core structure having sufficient area to cover the first conductive posts and first semiconductor die.

15. The semiconductor device of claim **14**, further comprising a carrier disposed under the IPD structure.

16. The semiconductor device of claim **14**, the first semiconductor die comprising a dummy die.

17. The semiconductor device of claim **14**, the first semiconductor die comprising an active semiconductor die.

18. The semiconductor device of claim **14**, further comprising:

a plurality of second conductive posts disposed over the wafer core structure;

a second semiconductor die mounted over the semiconductor device, the second semiconductor die electrically connected to the wafer core structure; and

a second molding compound deposited over the second conductive posts and second semiconductor die.

19. A semiconductor device, comprising:

an integrated passive device (IPD) structure;

a first semiconductor die mounted to the IPD structure;

a plurality of first conductive posts disposed over the IPD structure away from the first semiconductor die;

a core structure bonded to the first conductive posts over the first semiconductor die, the core structure including a semiconductor material and conductive TSVs; and

a second semiconductor die mounted over the core structure, the second semiconductor die being electrically connected to the core structure.

20. The semiconductor device of claim **19**, wherein the core structure has sufficient area to cover the first conductive posts and the first semiconductor die.

21. The semiconductor device of claim **19**, further comprising a first wafer molding compound deposited over the first conductive posts and the first semiconductor die.

22. The semiconductor device of claim **21**, further comprising:

a plurality of second conductive posts disposed over the core structure; and

a second wafer molding compound deposited over the second conductive posts and the second semiconductor die.

23. The semiconductor device of claim **22**, further comprising a second wafer molding compound deposited over the second conductive posts and the second semiconductor die.

24. The semiconductor device of claim **19**, further comprising a carrier disposed below the IPD structure.

* * * * *