US007307348B2

(12) **United States Patent**
Wood et al.

(10) **Patent No.: US 7,307,348 B2**
(45) **Date of Patent: Dec. 11, 2007**

(54) **SEMICONDUCTOR COMPONENTS HAVING THROUGH WIRE INTERCONNECTS (TWI)**

(75) Inventors: **Alan G. Wood**, Boise, ID (US); **David R. Hembree**, Boise, ID (US)

(73) Assignee: **Micron Technology, Inc.**, Boise, ID (US)

(*) Notice: Subject to any disclaimer, the term of this patent is extended or adjusted under 35 U.S.C. 154(b) by 0 days.

(21) Appl. No.: **11/296,057**

(22) Filed: **Dec. 7, 2005**

(65) **Prior Publication Data**

US 2007/0126091 A1 Jun. 7, 2007

(51) **Int. Cl.**
H01L 23/48 (2006.01)

(52) **U.S. Cl.** **257/774**

(58) **Field of Classification Search** 257/774
See application file for complete search history.

(56) **References Cited**

U.S. PATENT DOCUMENTS

4,394,712	A	7/1983	Anthony	
4,710,795	A *	12/1987	Nippert et al.	257/692
4,897,708	A	1/1990	Clements	
5,229,647	A	7/1993	Gnadinger	
5,432,999	A	7/1995	Capps	
5,483,741	A	1/1996	Akram et al.	
5,496,775	A	3/1996	Brooks	
5,894,983	A	4/1999	Beck et al.	
5,931,685	A	8/1999	Hembree et al.	
5,990,546	A	11/1999	Igarashi et al.	
6,107,109	A	8/2000	Akram et al.	
6,294,837	B1	9/2001	Akram et al.	
6,380,555	B1	4/2002	Hembree et al.	
6,395,581	B1	5/2002	Choi	
6,400,172	B1	6/2002	Akram et al.	
6,444,576	B1	9/2002	Kong	
6,451,624	B1	9/2002	Farnworth et al.	
6,501,165	B1	12/2002	Farnworth et al.	
6,566,747	B2 *	5/2003	Ohuchi et al.	257/698

(Continued)

OTHER PUBLICATIONS

Ivy Wei Qin et al., "Automatic Wedge Bonding with Ribbon Wire For High Frequency Applications", Semicon West, 2002 SEMI, pp. 1-11.

(Continued)

Primary Examiner—Roy Potter
(74) *Attorney, Agent, or Firm*—Stephen A. Gratton

(57) **ABSTRACT**

A semiconductor component includes a semiconductor substrate having a substrate contact, and a through wire interconnect (TWI) bonded to the substrate contact. The through wire interconnect (TWI) includes a via through the substrate contact and the substrate, a wire in the via bonded to the substrate contact, and a contact on the wire. A stacked semiconductor component includes the semiconductor substrate, and a second semiconductor substrate stacked on the substrate and bonded to a through wire interconnect on the substrate. A method for fabricating a semiconductor component with a through wire interconnect includes the steps of providing a semiconductor substrate with a substrate contact, forming a via through the substrate contact and part way through the substrate, placing the wire in the via, bonding the wire to the substrate contact, and then thinning the substrate from a second side to expose a contact on the wire. A system for fabricating the semiconductor component includes a bonding capillary configured to place the wire in the via, and to form a bonded connection between the wire and the substrate contact.

56 Claims, 21 Drawing Sheets

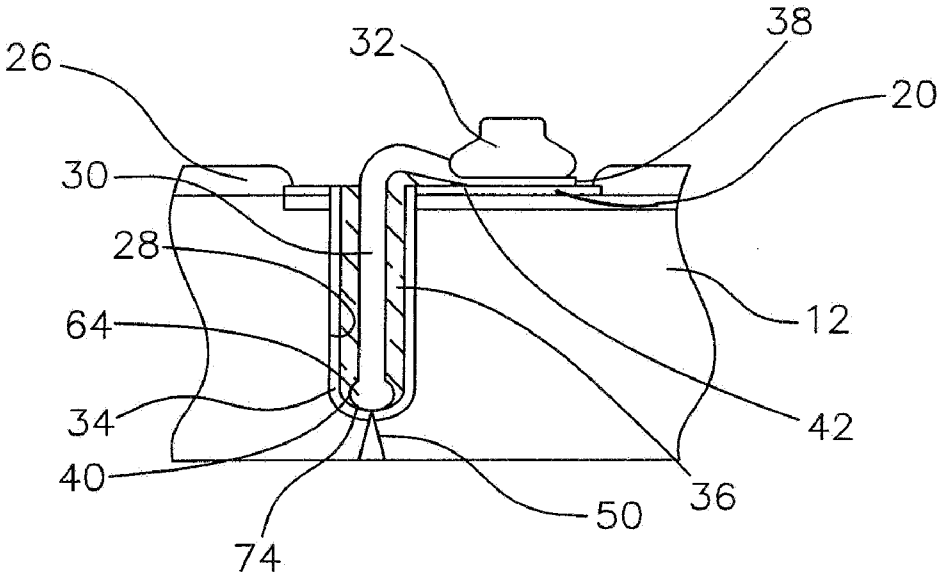

U.S. PATENT DOCUMENTS

6,600,221	B2 *	7/2003	Kimura	257/686
6,605,551	B2 *	8/2003	Wermer et al.	438/778
6,620,633	B2	9/2003	Hembree et al.	
6,620,731	B1	9/2003	Farnworth et al.	
6,717,245	B1	4/2004	Kinsman et al.	
6,803,303	B1	10/2004	Hiatt et al.	
6,833,317	B2	12/2004	Akram et al.	
6,833,613	B1	12/2004	Akram et al.	
6,841,883	B1	1/2005	Farnworth et al.	
6,848,177	B2	2/2005	Swann et al.	
6,881,648	B2	4/2005	Chen et al.	
6,882,057	B2 *	4/2005	Hsu	257/784
6,903,443	B2	6/2005	Farnworth et al.	
6,906,418	B2	6/2005	Hiatt et al.	
6,908,784	B1	6/2005	Farnworth	
6,952,054	B2	10/2005	Akram et al.	
6,964,915	B2	11/2005	Farnworth et al.	
6,998,344	B2	2/2006	Akram et al.	
6,998,717	B2	2/2006	Farnworth et al.	
7,029,949	B2	4/2006	Farnworth et al.	
7,060,526	B2	6/2006	Farnworth et al.	
7,078,266	B2	7/2006	Wood et al.	
7,078,922	B2	7/2006	Kirby	
7,108,546	B2 *	9/2006	Miller et al.	439/578
7,132,731	B2	11/2006	Wood et al.	
2003/0230805	A1	12/2003	Noma et al.	
2006/0228825	A1	10/2006	Hembree	
2006/0289992	A1	12/2006	Wood	

OTHER PUBLICATIONS

U.S. Appl. No. 11/102,408 filed Apr. 8, 2005, David R. Hembree, entitled "Method and System for Fabricating Semiconductor Components with Through Wire Interconnects".

International Technology Roadmap for Semiconductors, 2005 Edition, Assembly and Packaging, pp. 1-44.

Renesas, Hitachi and Renesas Technology Develop Through-Hole Electrode Technology to Enable Interconnection of Stacked Chips at Room Temperature, News Release, Jun. 1, 2005, p. 1-2.

* cited by examiner

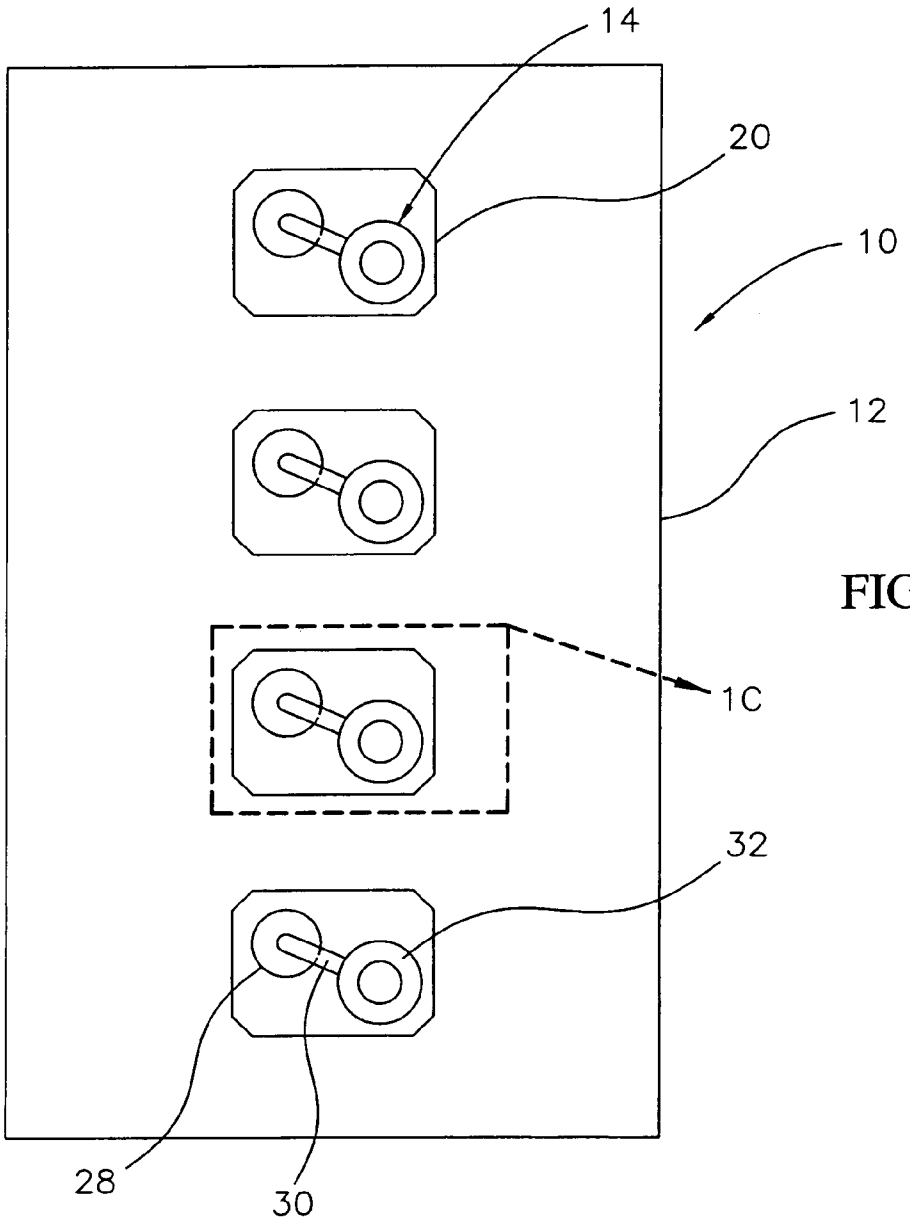

FIGURE 1A

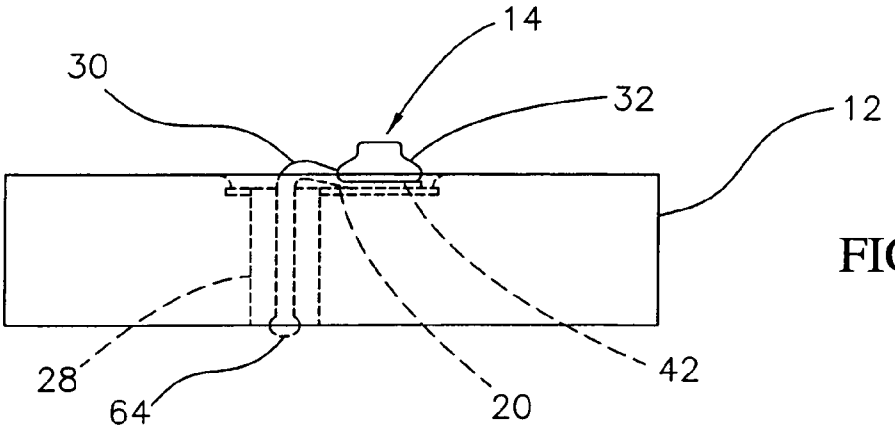

FIGURE 1B

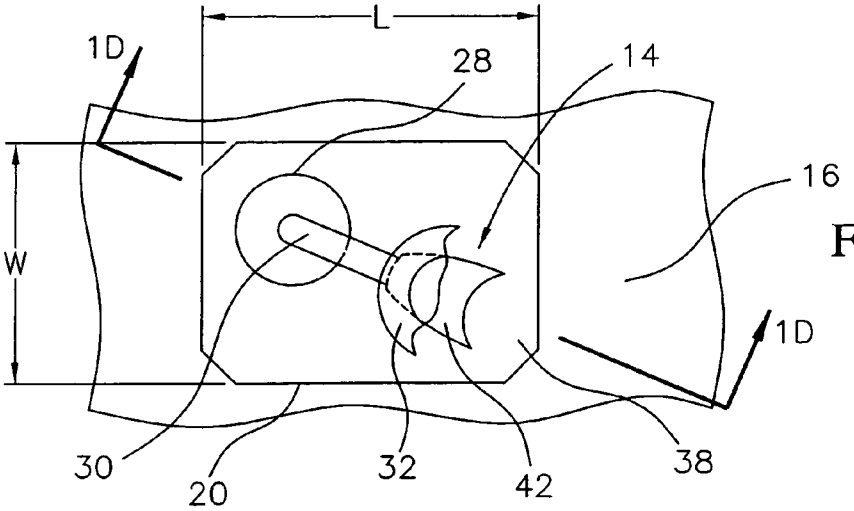

FIGURE 1C

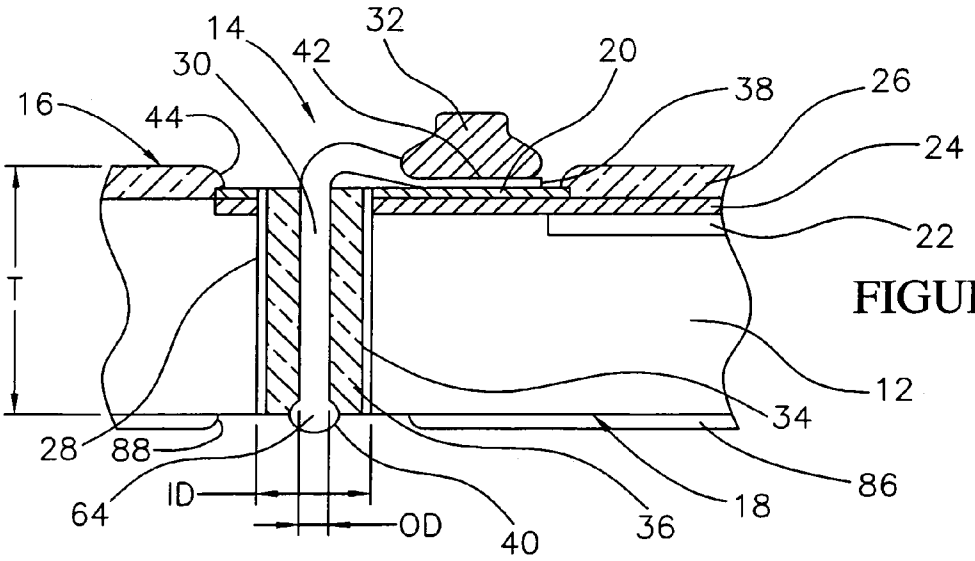

FIGURE 1D

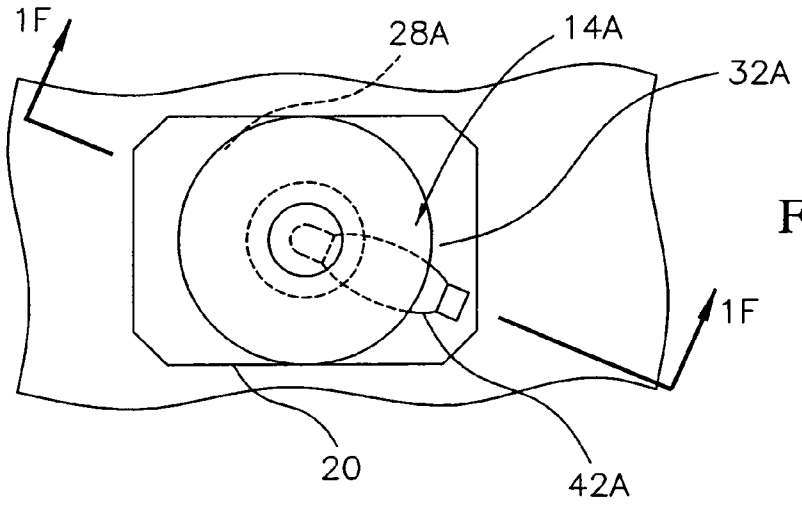

FIGURE 1E

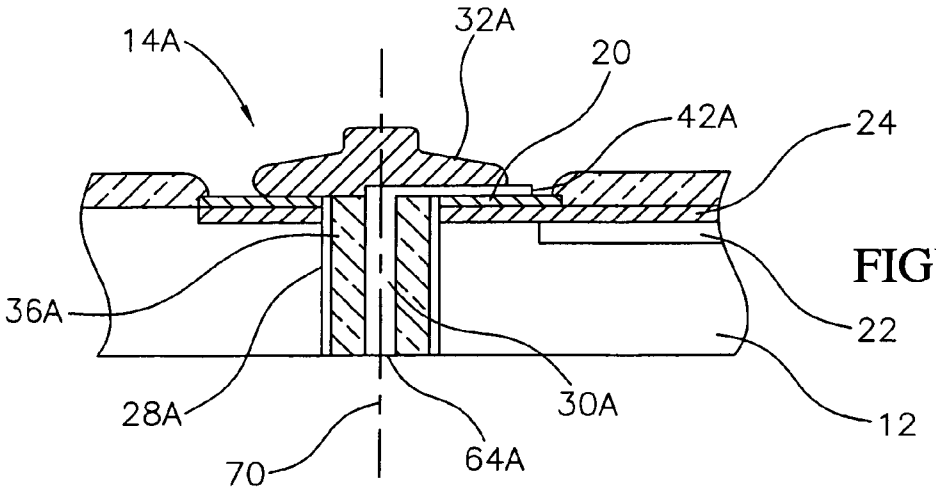

FIGURE 1F

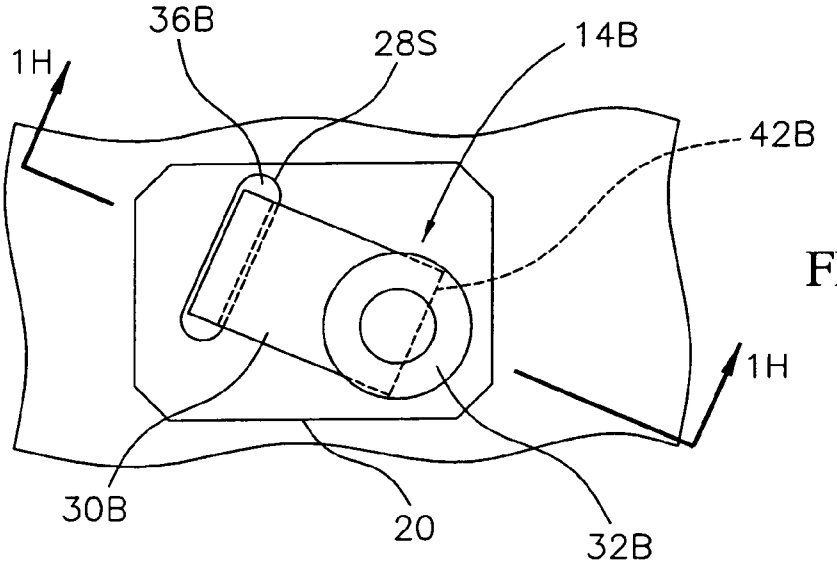

FIGURE 1G

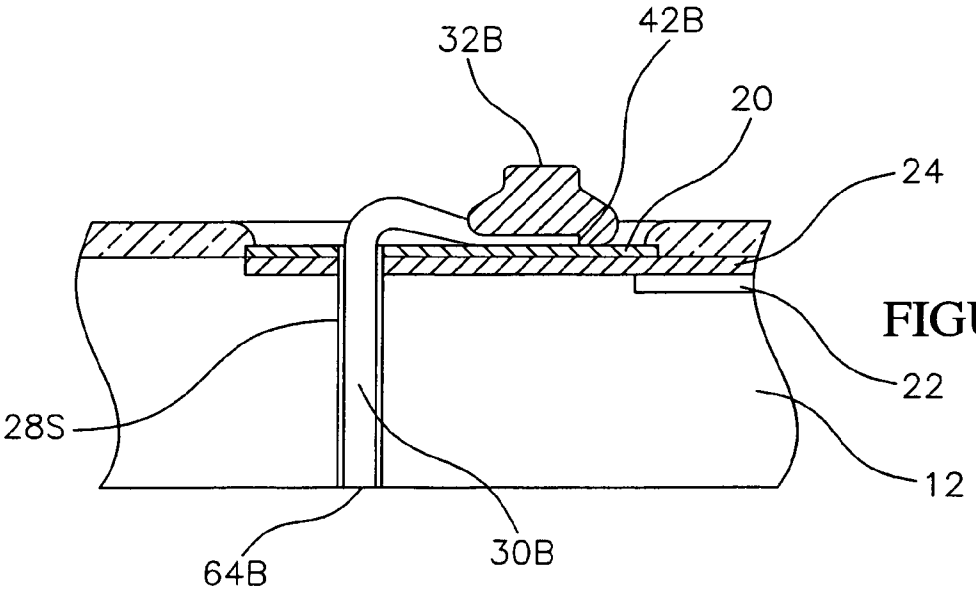

FIGURE 1H

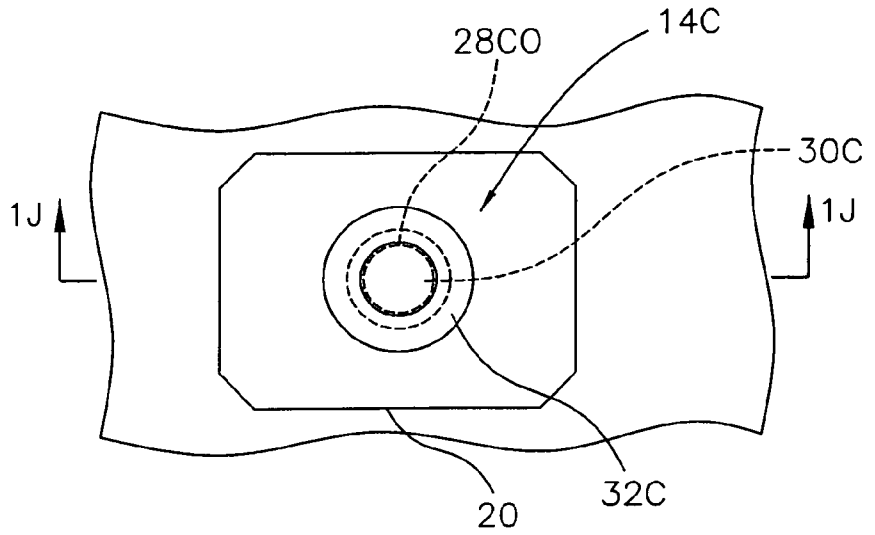

FIGURE 1I

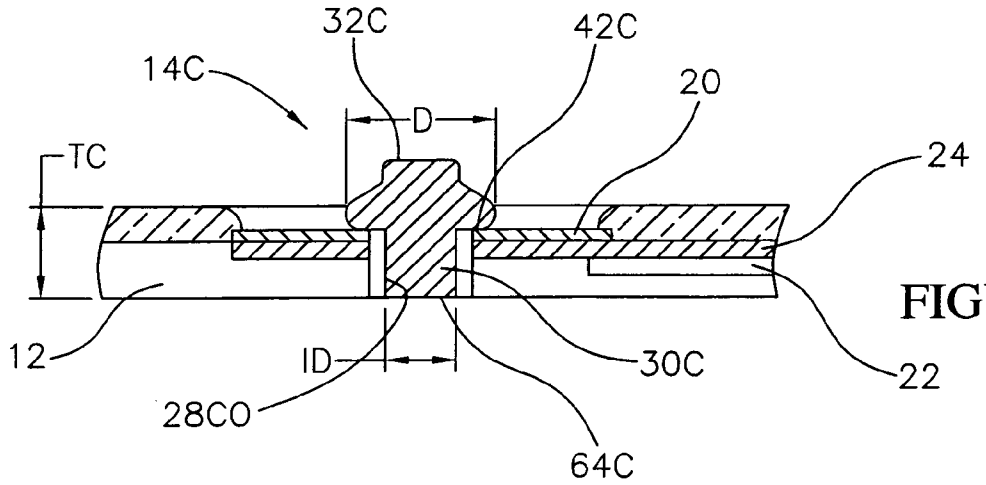

FIGURE 1J

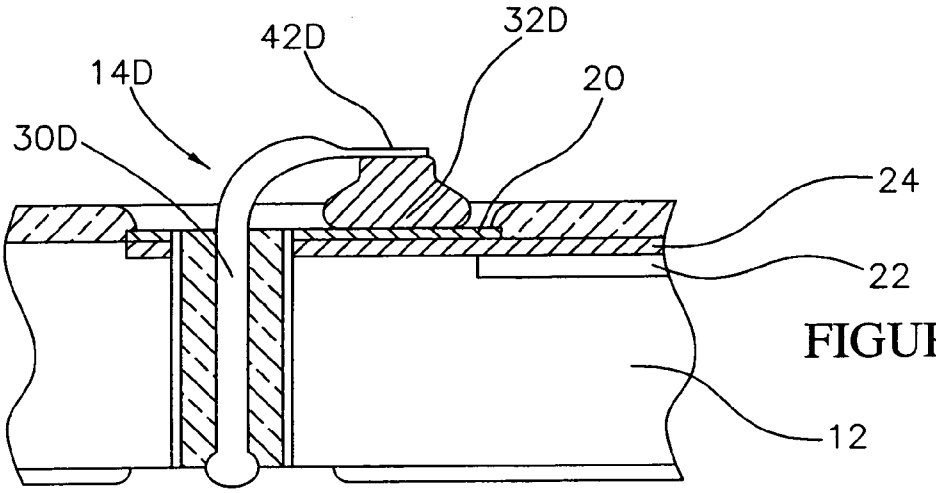

FIGURE 1K

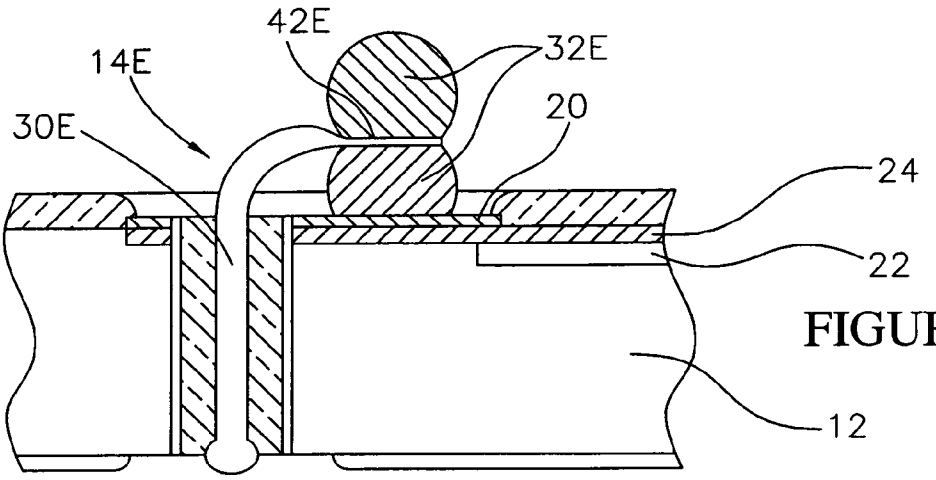

FIGURE 1L

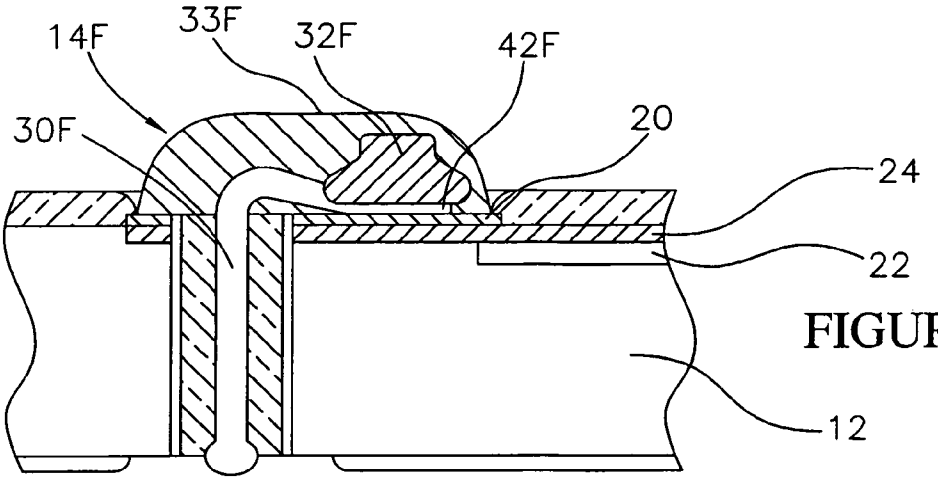

FIGURE 1M

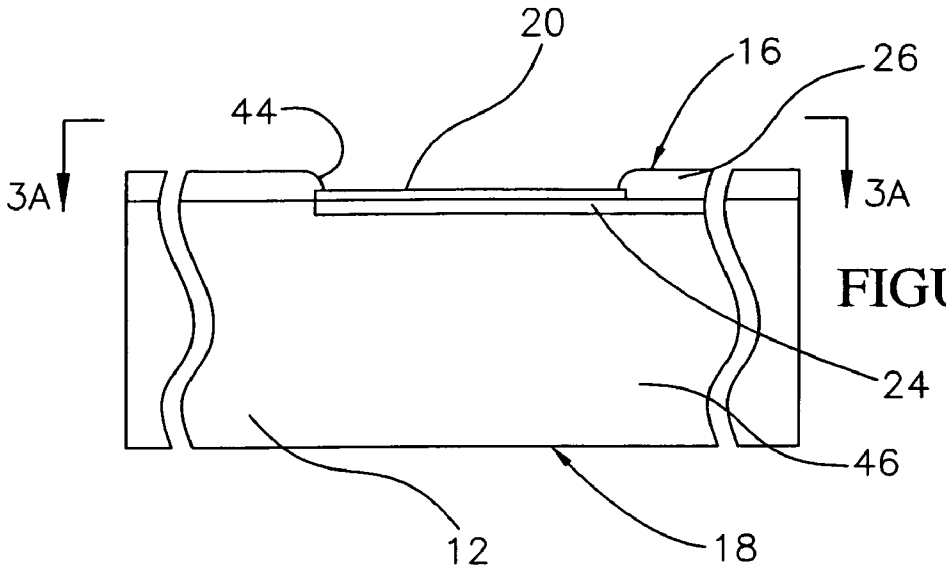

FIGURE 2A

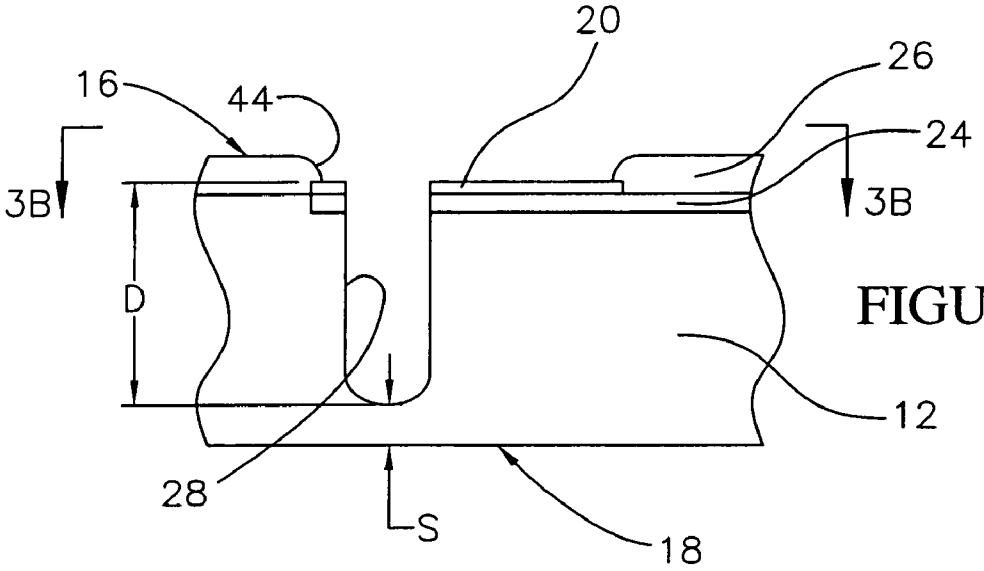

FIGURE 2B

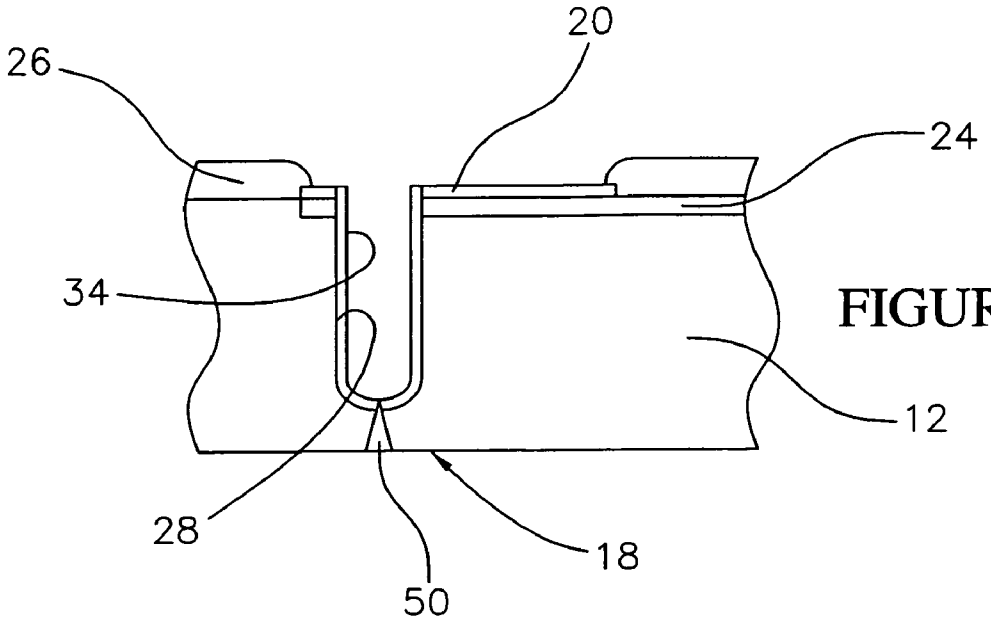

FIGURE 2C

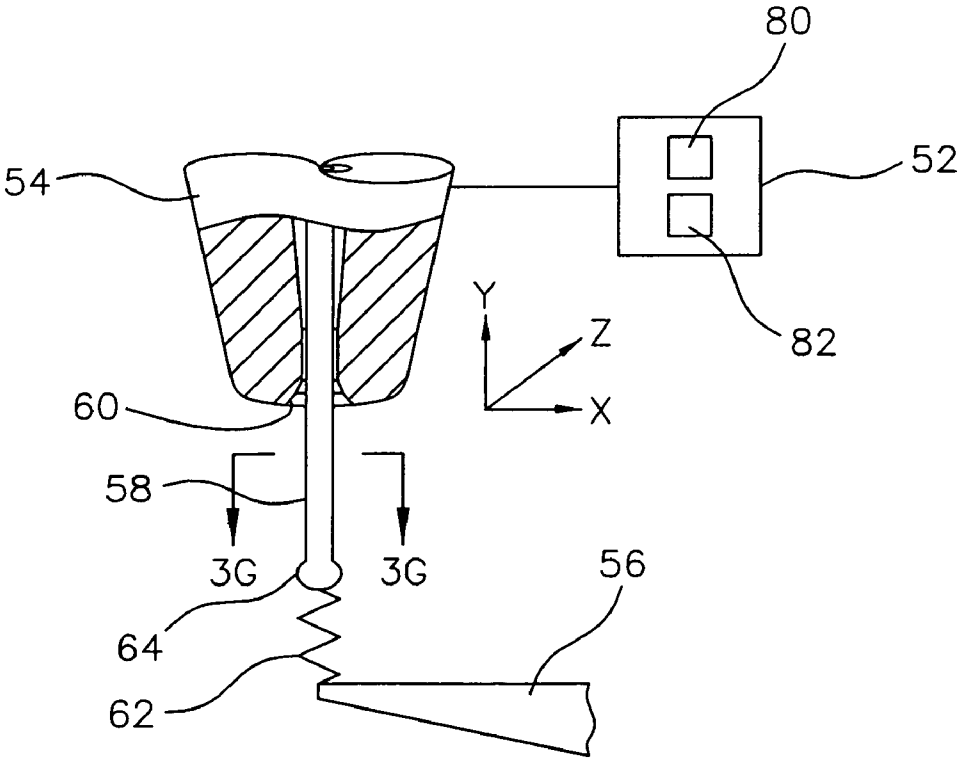

FIGURE 2D

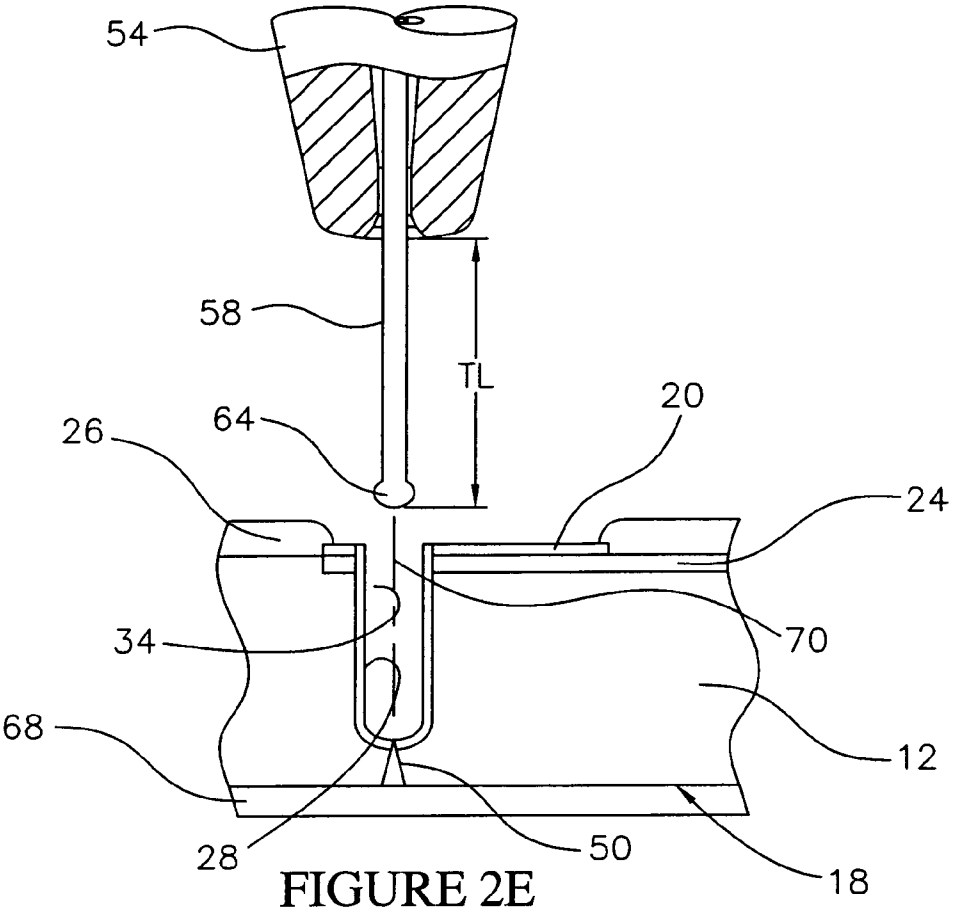

FIGURE 2E

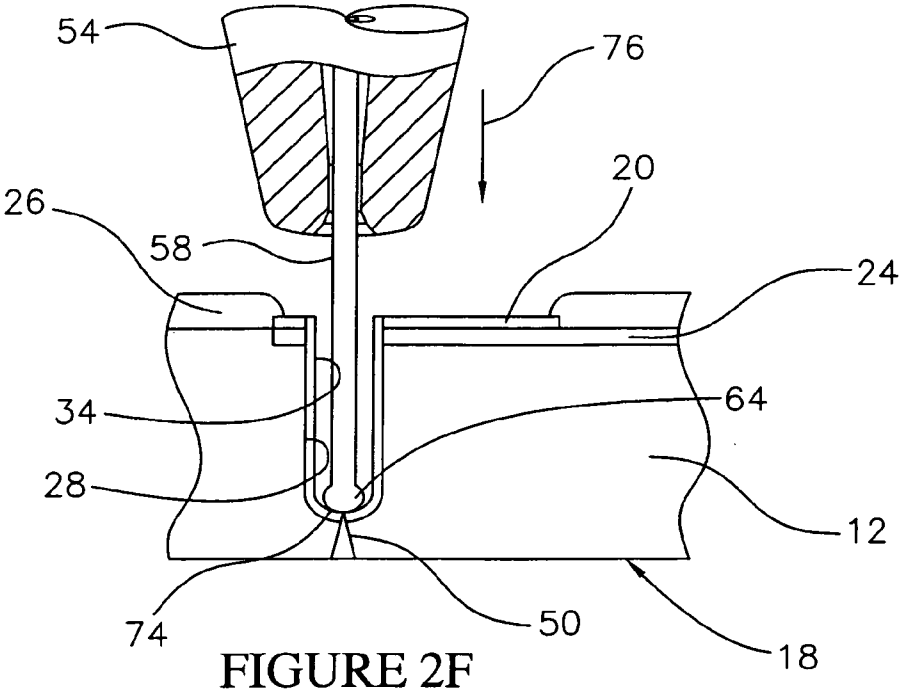

FIGURE 2F

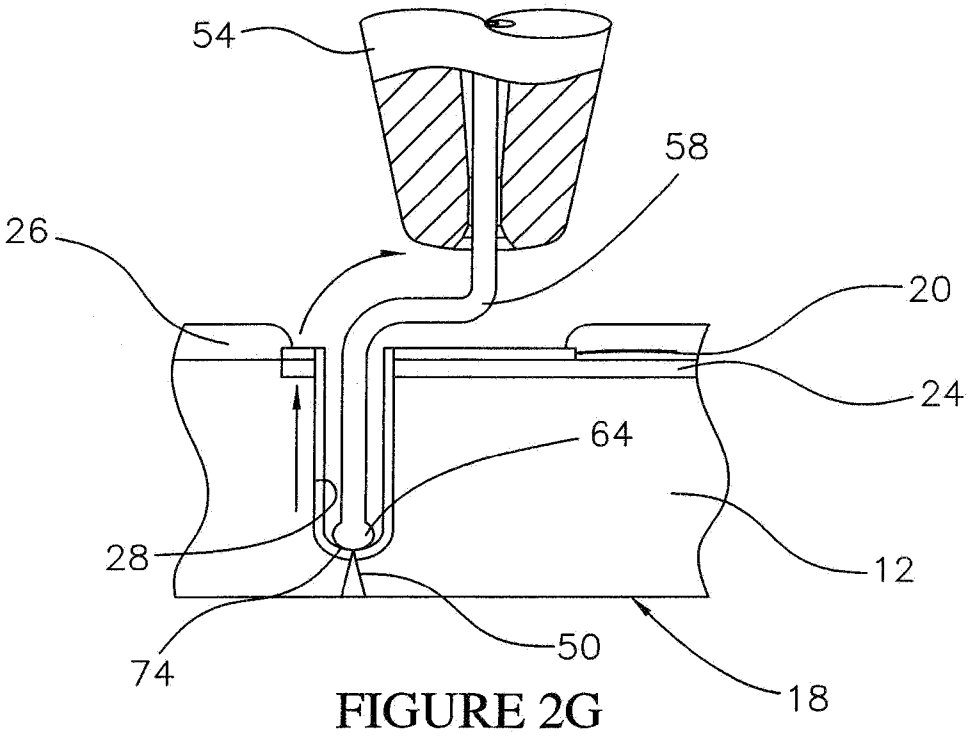

FIGURE 2G

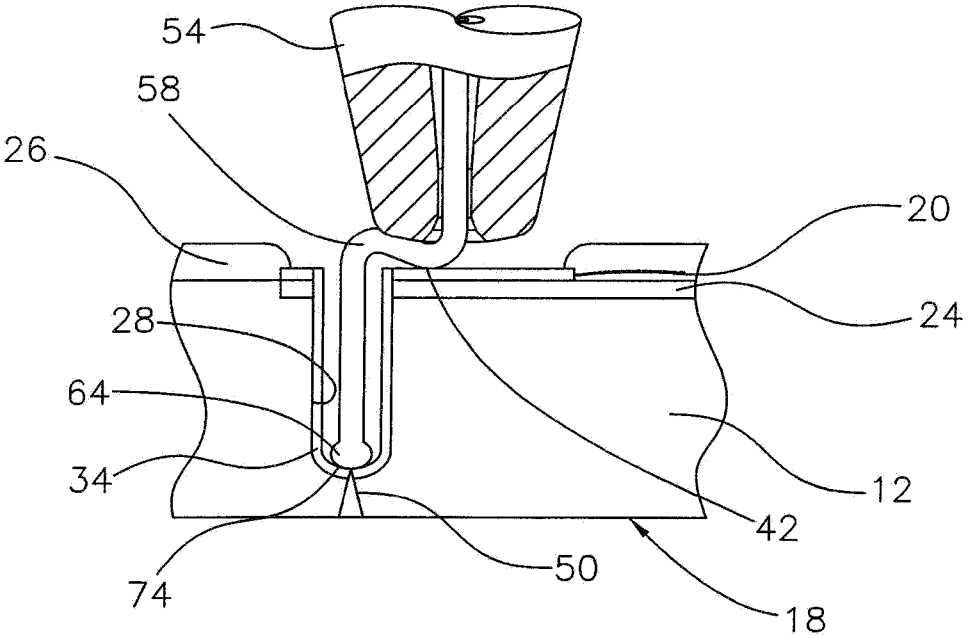

FIGURE 2H

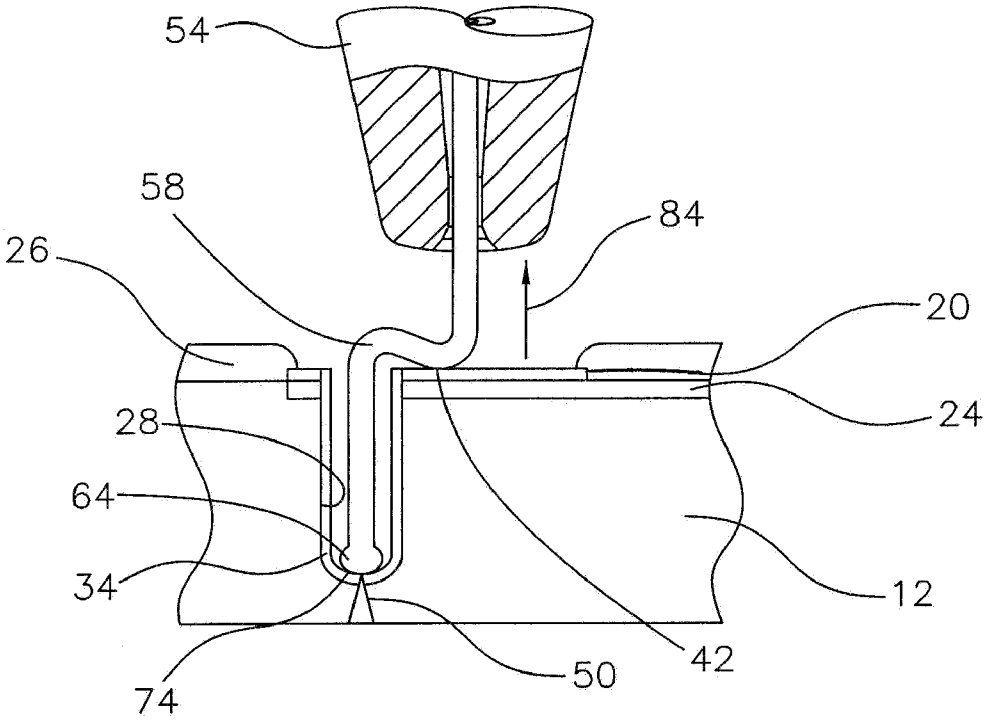

FIGURE 2I

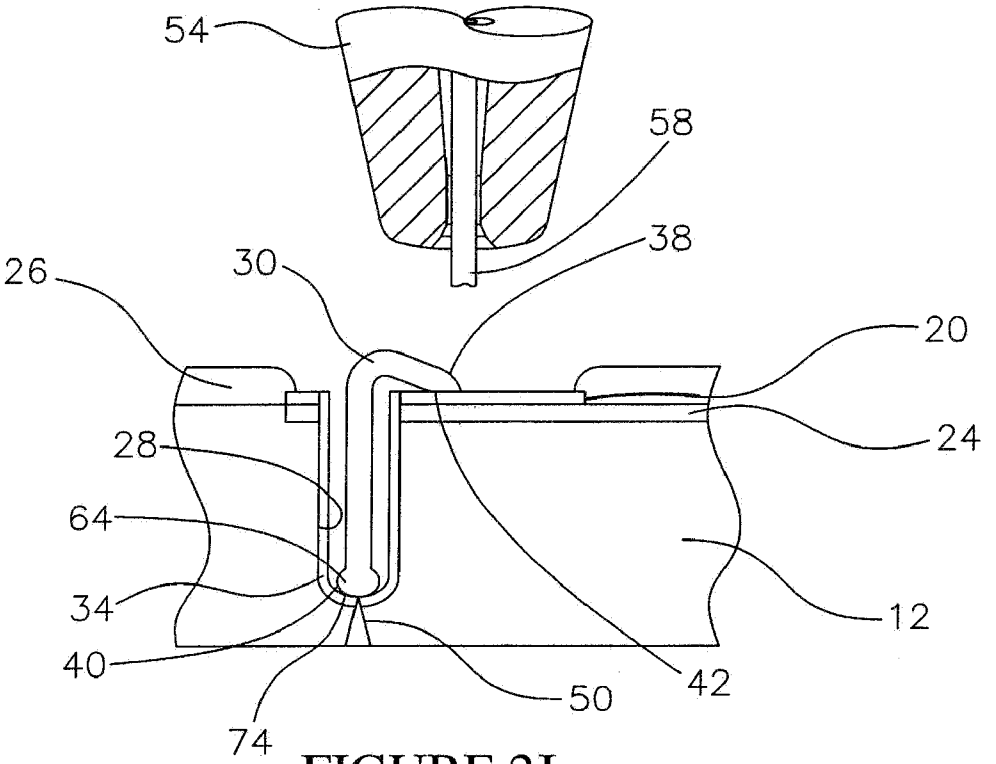

FIGURE 2J

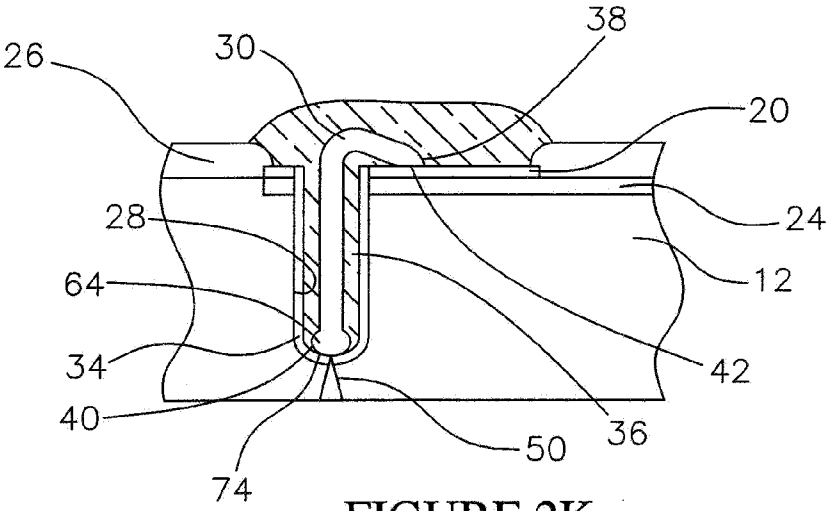

FIGURE 2K

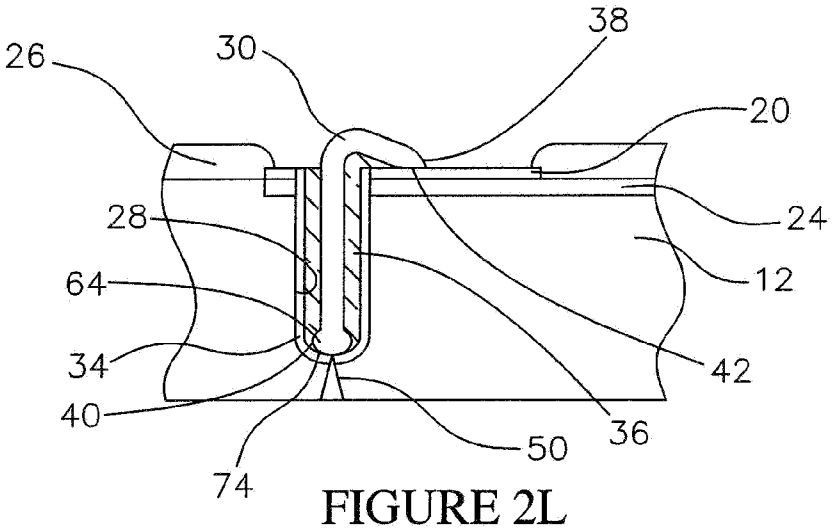

FIGURE 2L

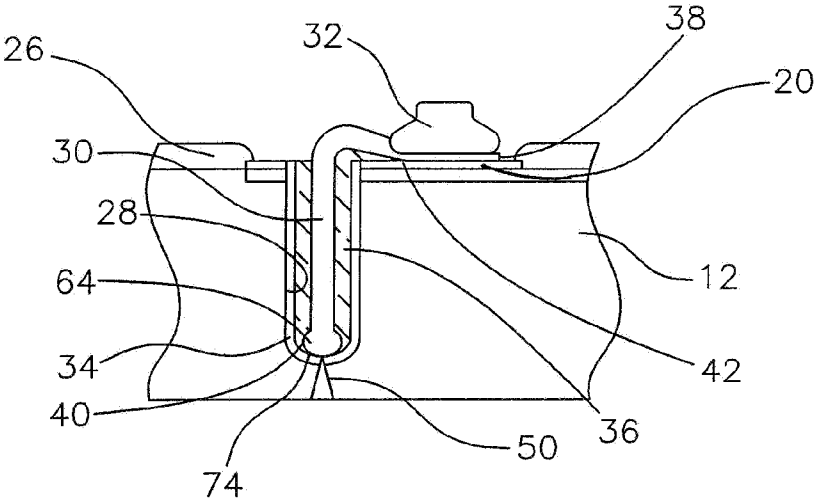

FIGURE 2M

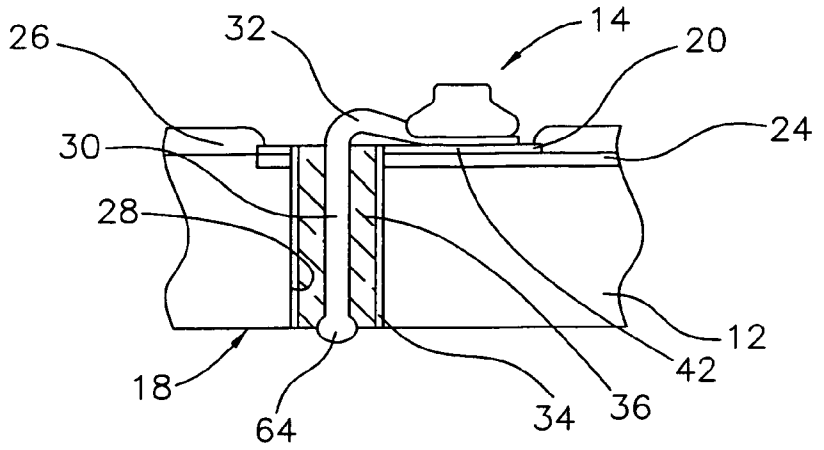

FIGURE 2N

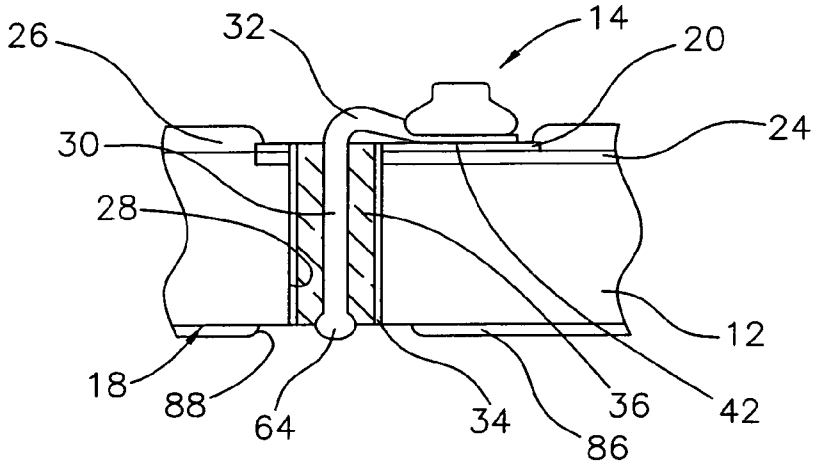

FIGURE 2O

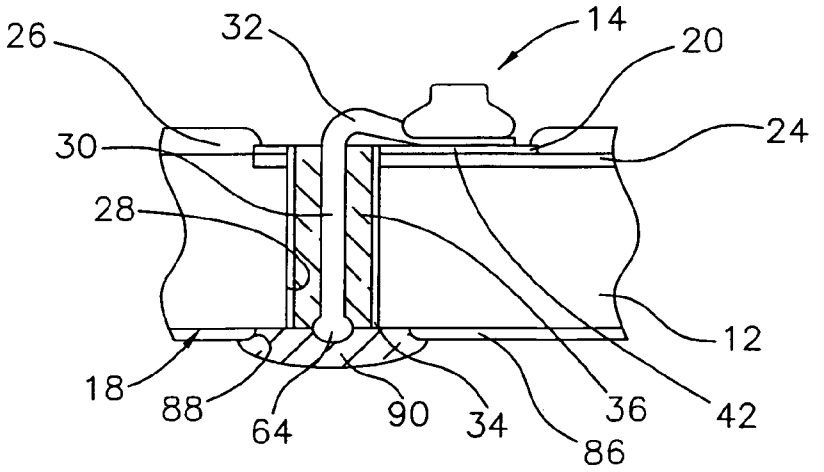

FIGURE 2P

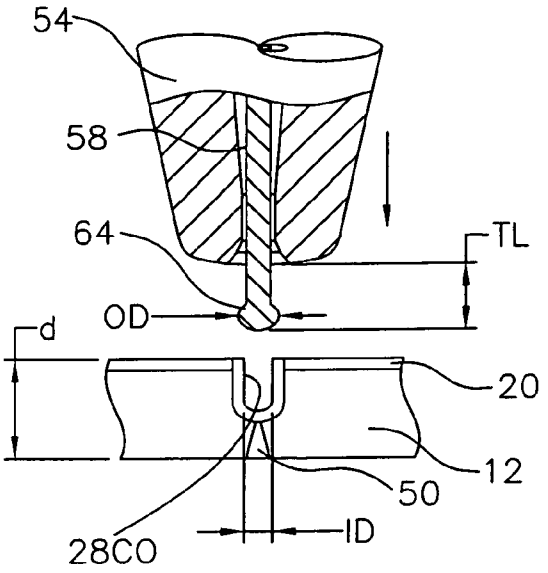

FIGURE 2Q

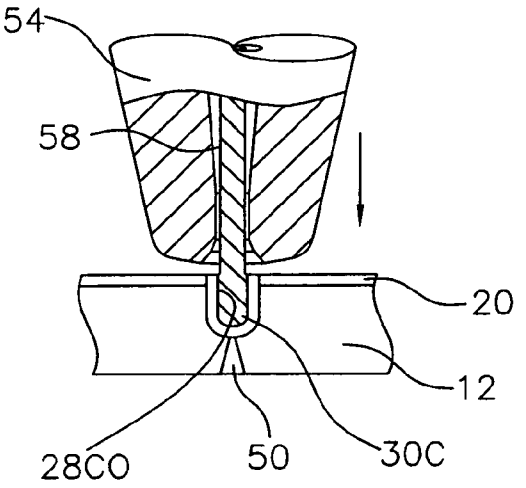

FIGURE 2R

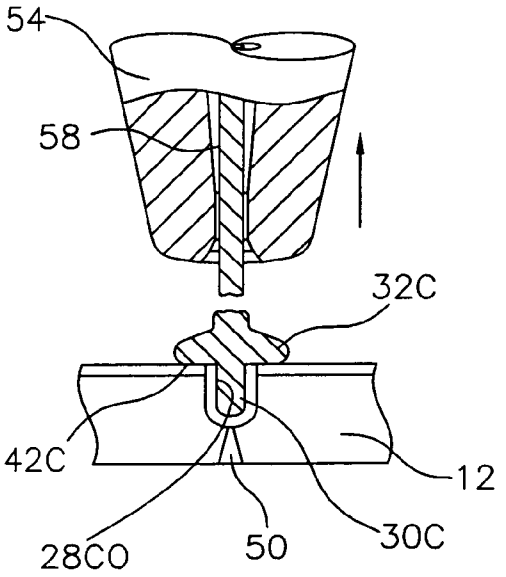

FIGURE 2S

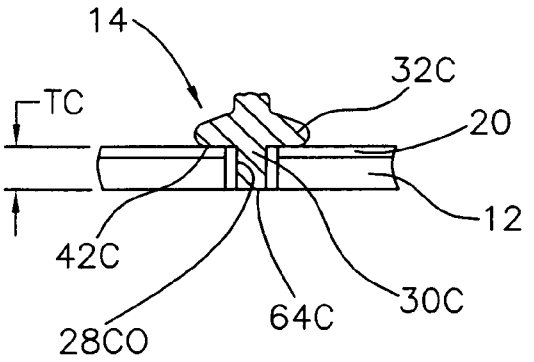

FIGURE 2T

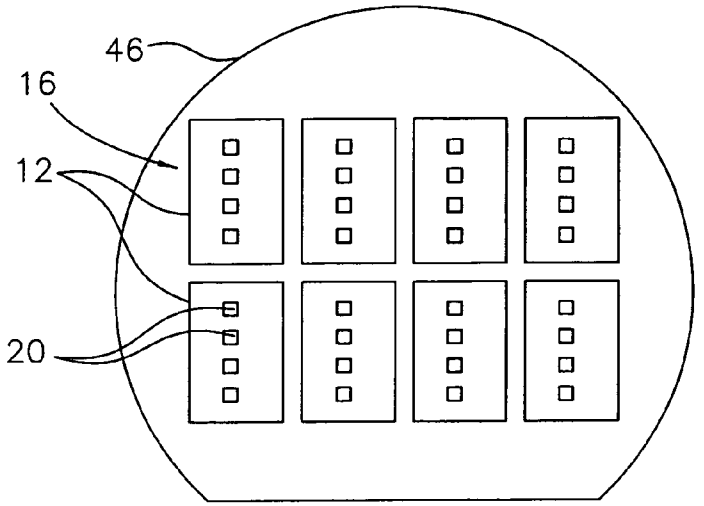

FIGURE 3A

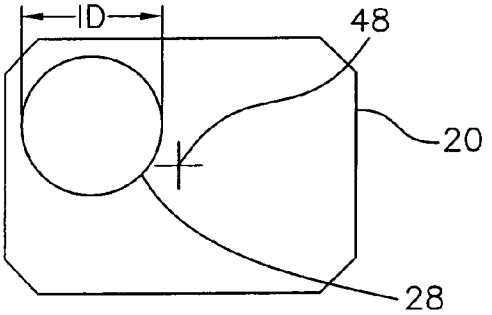

FIGURE 3B

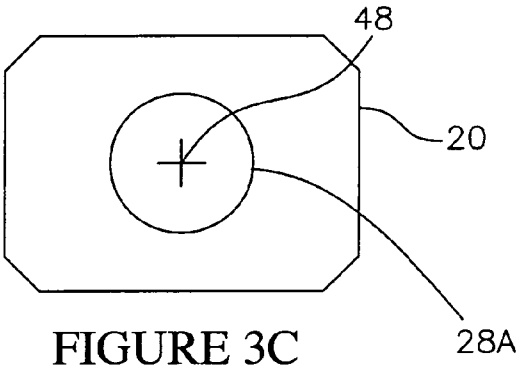

FIGURE 3C

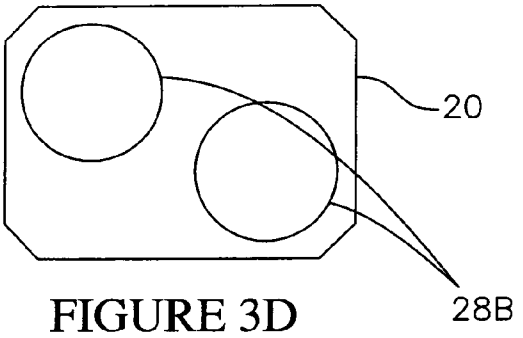

FIGURE 3D

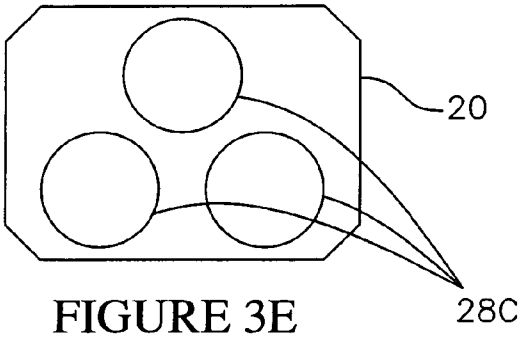

FIGURE 3E

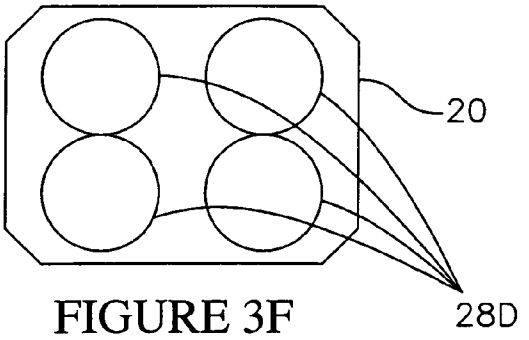

FIGURE 3F

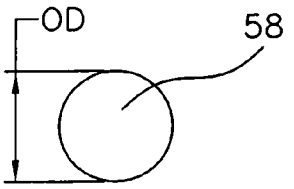

FIGURE 3G

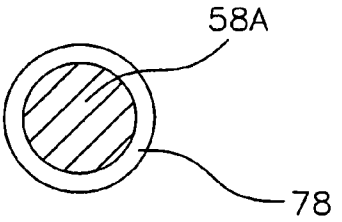

FIGURE 3H

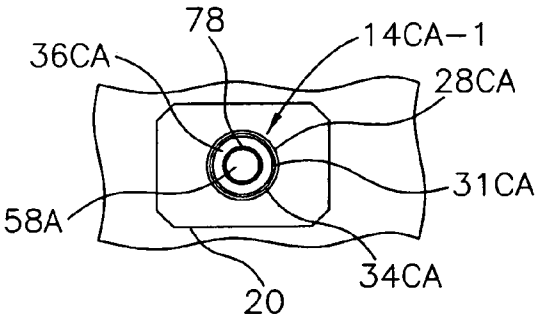

FIGURE 3I

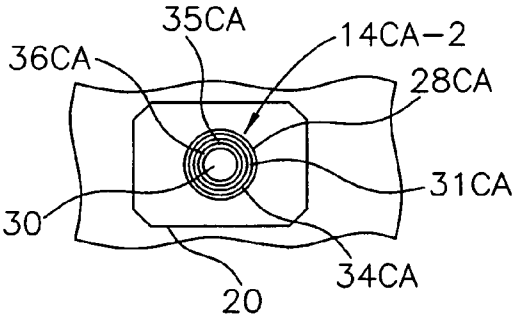

FIGURE 3J

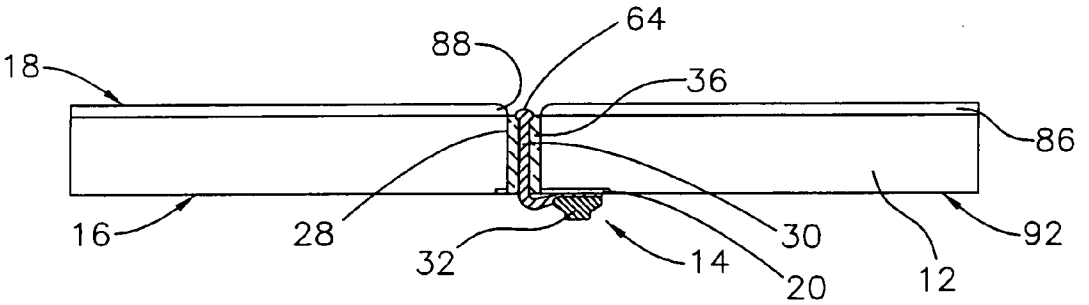

FIGURE 4A

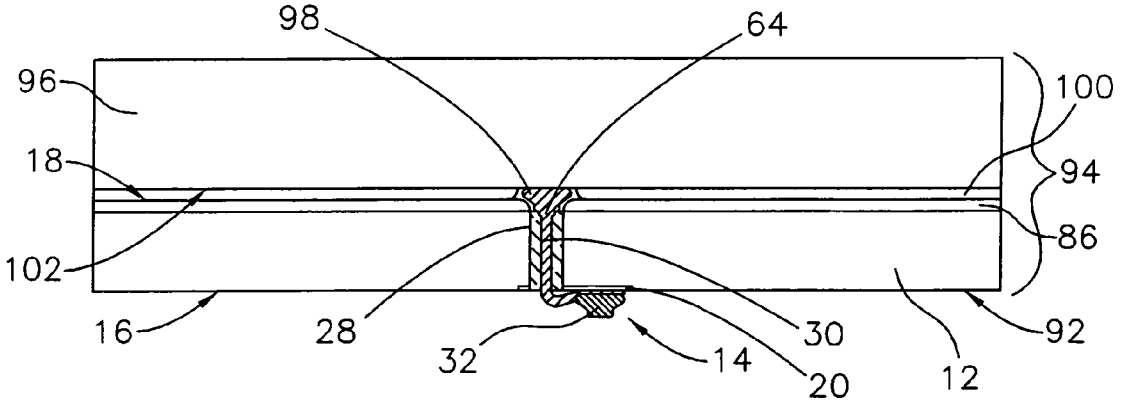

FIGURE 4B

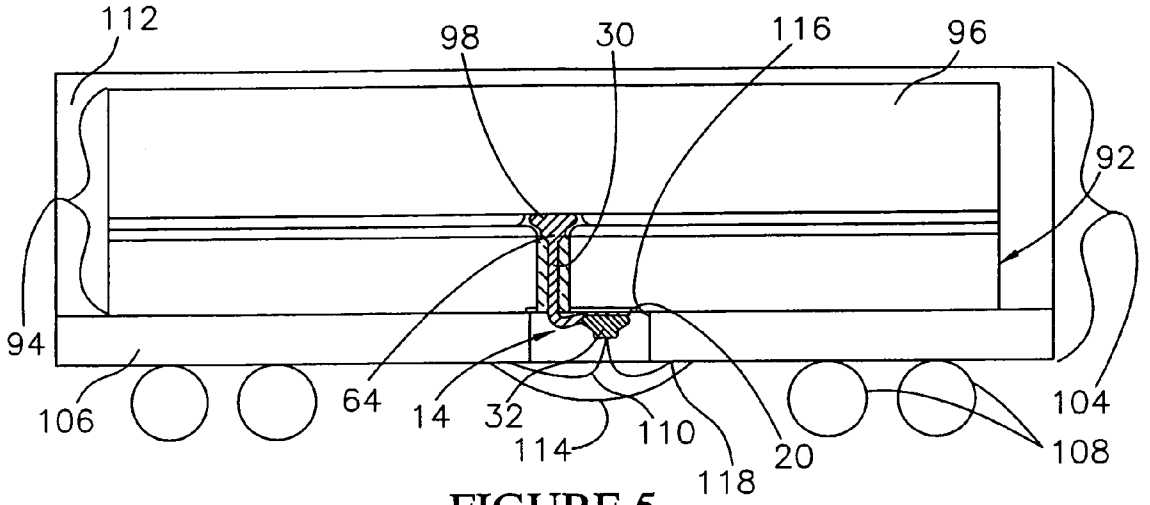

FIGURE 5

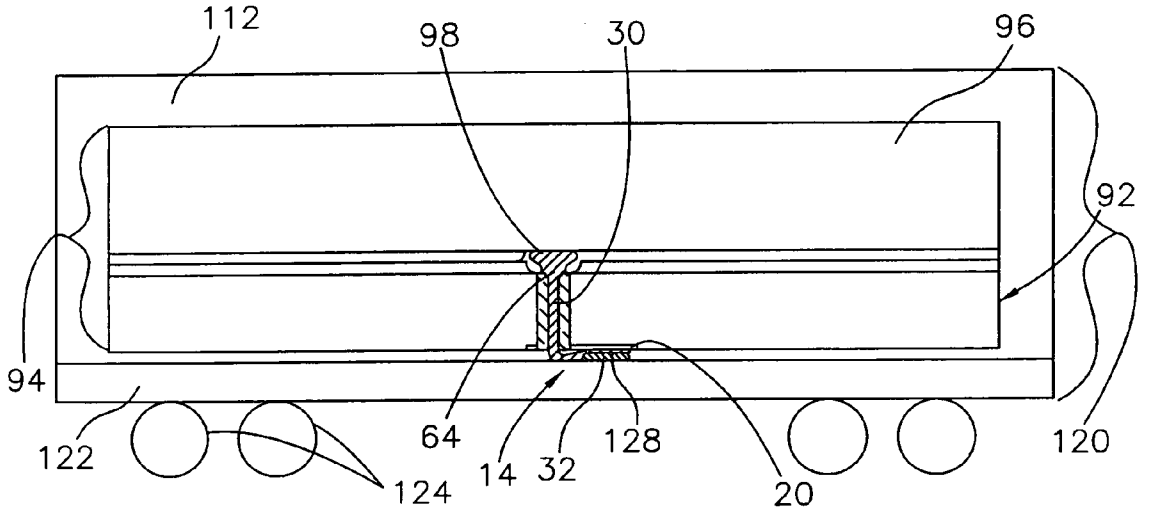

FIGURE 6

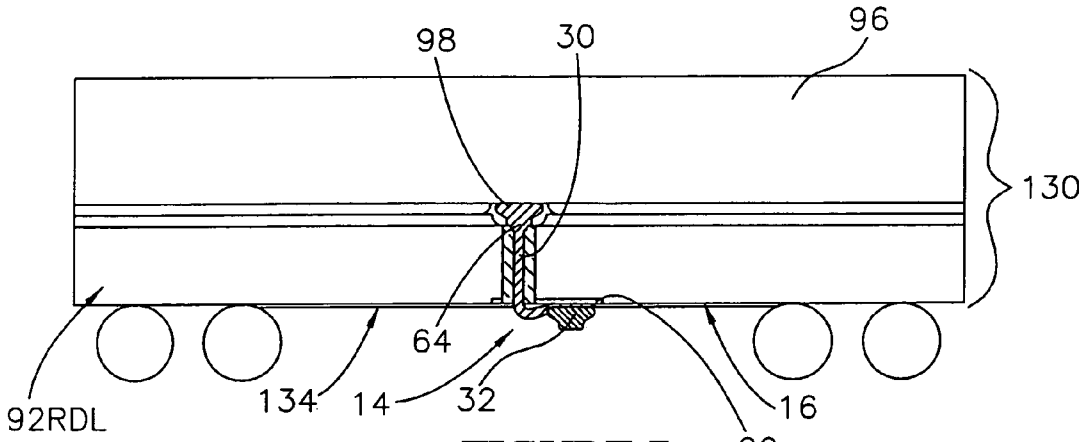

FIGURE 7

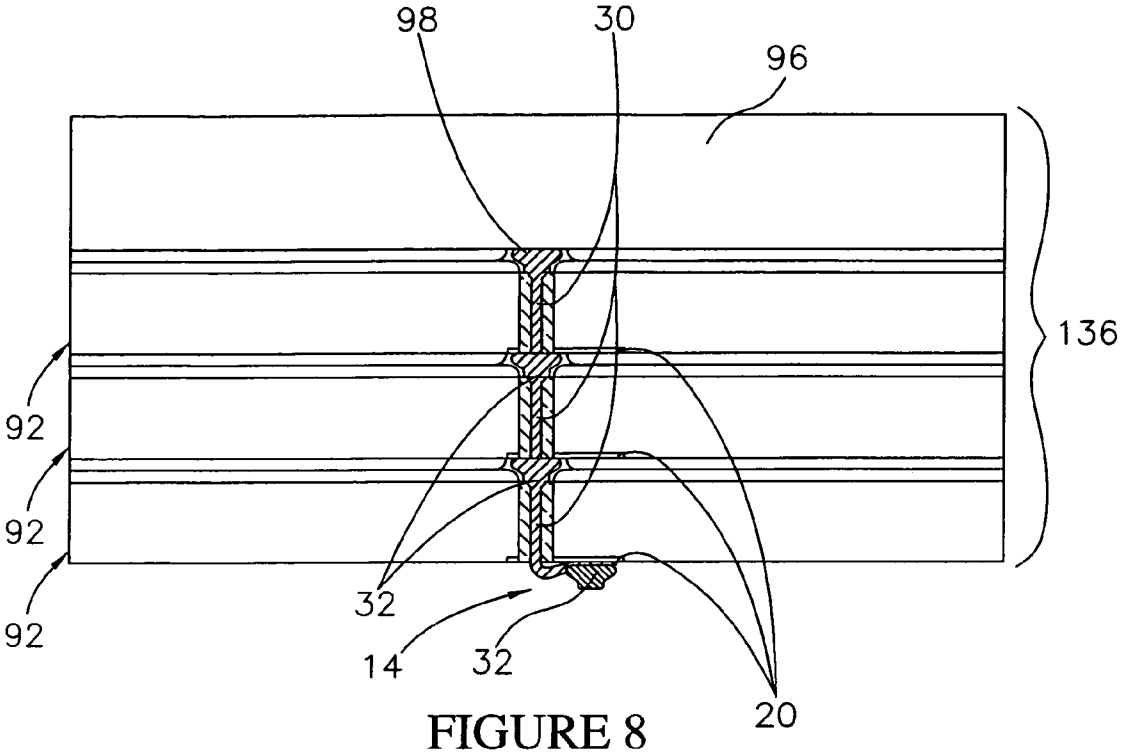

FIGURE 8

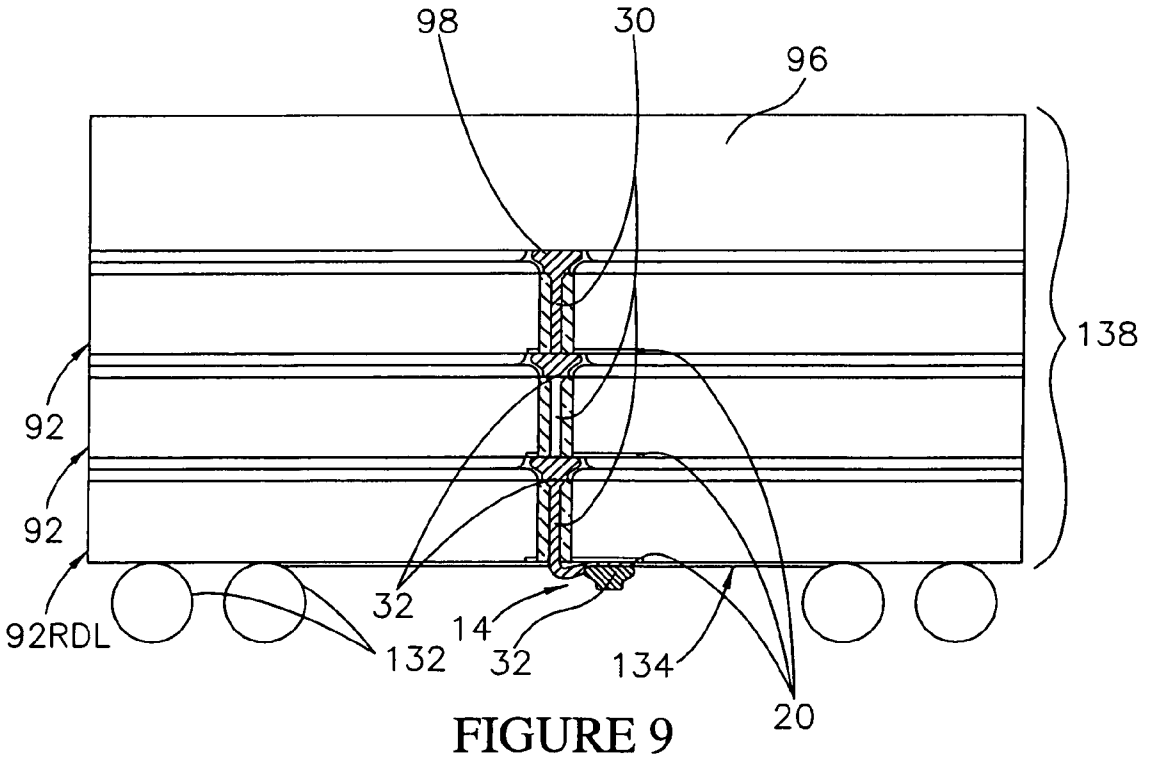

FIGURE 9

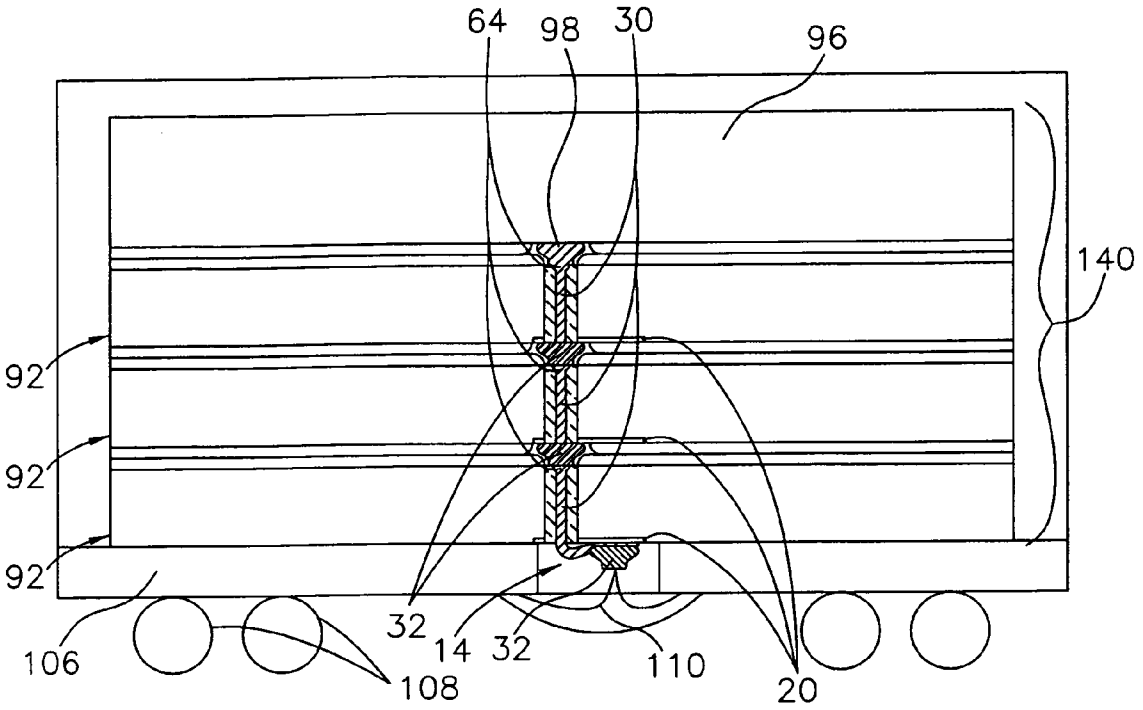

FIGURE 10

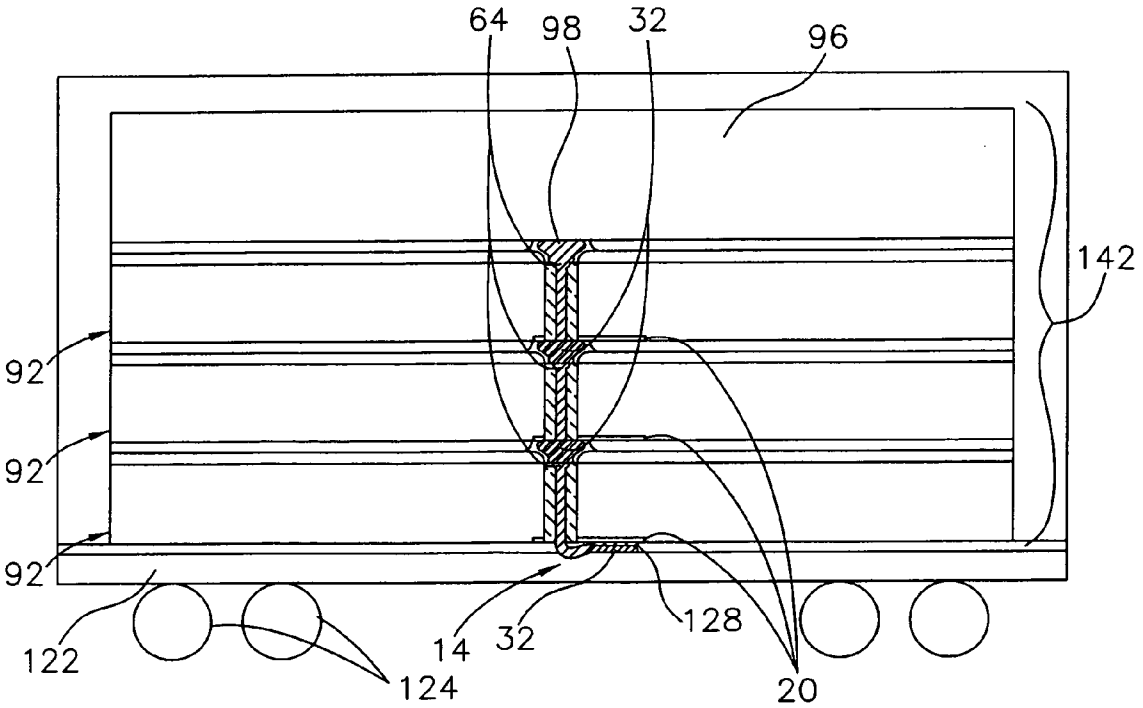

FIGURE 11

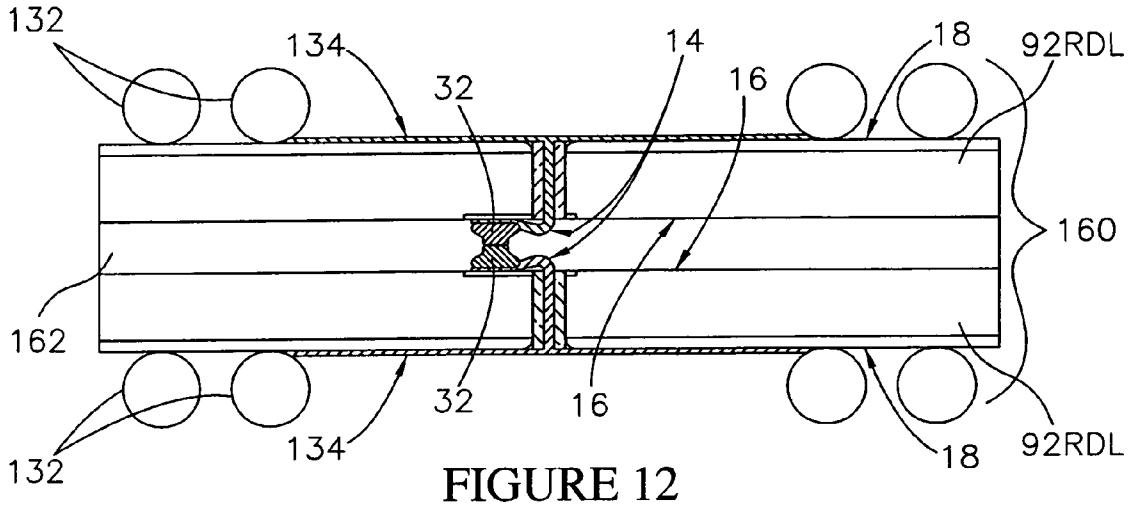

FIGURE 12

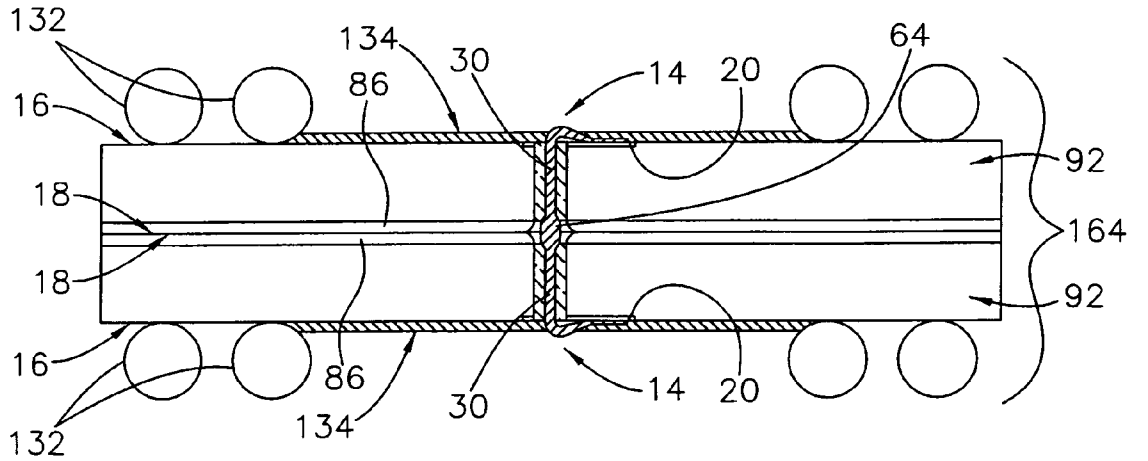

FIGURE 13

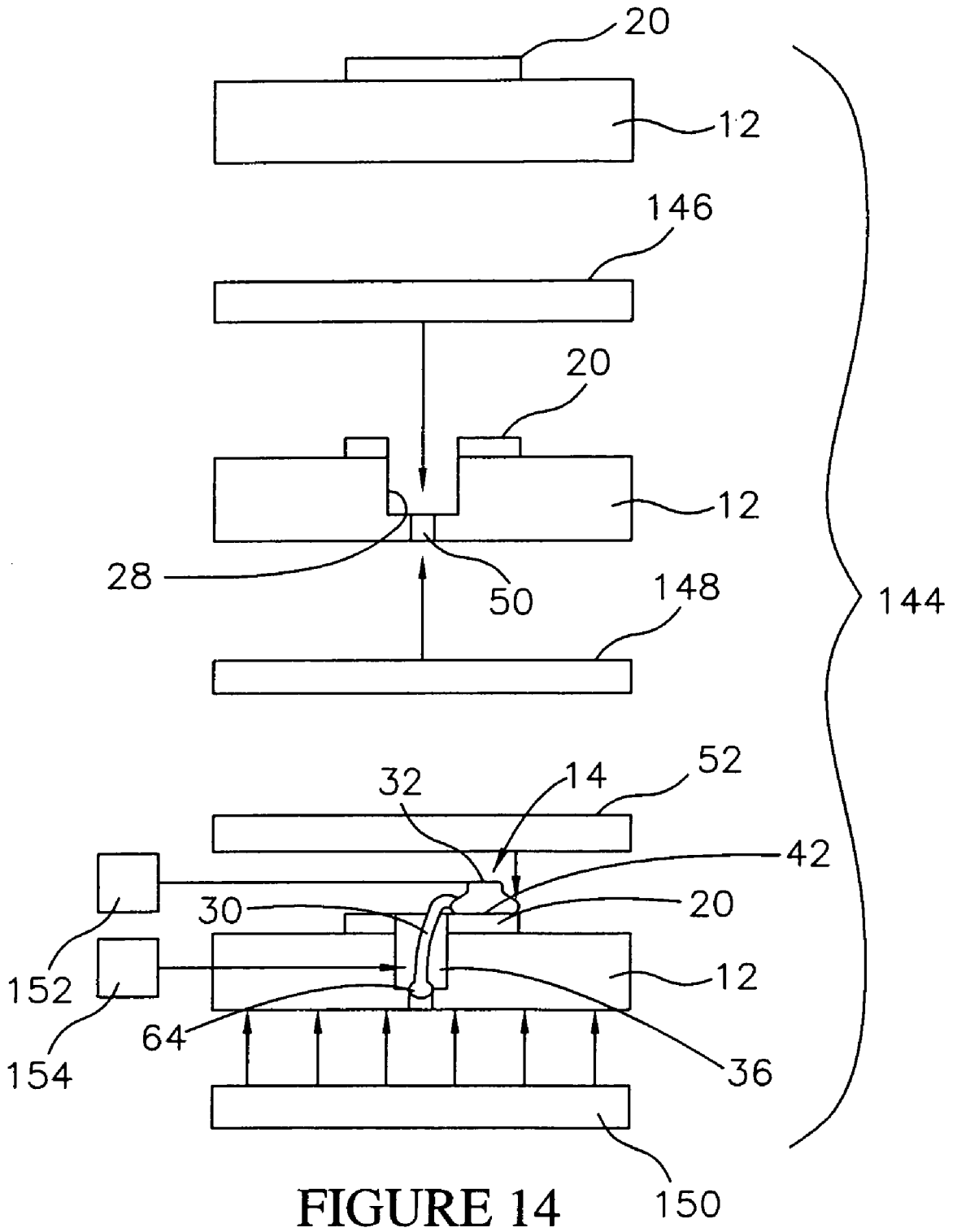

FIGURE 14

SEMICONDUCTOR COMPONENTS HAVING THROUGH WIRE INTERCONNECTS (TWI)

CROSS REFERENCE TO RELATED APPLICATIONS

This application is related to Ser. No. 11/712,815 filed Mar. 1, 2007.

BACKGROUND OF THE INVENTION

As semiconductor components become smaller and have more complicated input/output configurations, different types of interconnects have been developed for implementing different signal transmission systems to and from the integrated circuits contained on the components. For example, surface interconnects, such as redistribution conductors can be formed on a particular surface, such as on a face or a back side of a semiconductor component. Via interconnects, such as metal filled vias, can be used to electrically connect electrical elements, such as terminal contacts or bond pads, on opposing surfaces of a semiconductor component. Wire interconnects, such as wires bonded to bond pads, can be used to electrically connect a semiconductor component to mating contacts on a supporting substrate, such as a package substrate, a module substrate, or a PCB. Bump interconnects, such as solder balls or bumps, can be used to mount a semiconductor component in a flip chip configuration to a supporting substrate.

In fabricating semiconductor components, interconnects having a high electrical conductivity, and a low parasitic capacitance, provide the best performance for a signal transmission system. In addition, for fabricating semiconductor components, particularly chip scale components, it is advantageous for interconnects to be capable of fabrication in dense configurations using conventional equipment and techniques. In general, conventional interconnects have limitations on conductivity, capacitance, density and manufacture. For example, deposited conductors can have a low electrical resistivity. Wire interconnects can have a low capacitance, but require additional space for looping and bonding, and require protective structures such as encapsulants.

It is also advantageous for interconnects to have the capability to electrically connect multiple semiconductor substrates in a stacked configuration. For example, a stacked semiconductor component can include multiple stacked semiconductor substrates (e.g., dice) having integrated circuits in a desired electrical configuration, such as memory, processing or imaging. Conventional interconnects also have limitations on their ability to form stacked semiconductor components. For example, wire interconnects are generally not used to make electrical connections between stacked substrates.

In view of the limitations of conventional interconnects, it would be advantageous for an interconnect to have new and different features which overcome some of these limitations. However, the foregoing examples of the related art and limitations related therewith, are intended to be illustrative and not exclusive. Other limitations of the related art will become apparent to those of skill in the art upon a reading of the specification and a study of the drawings.

SUMMARY OF THE INVENTION

The following embodiments and aspects thereof are described and illustrated in conjunction with components,

methods, materials and systems, which are meant to be exemplary and illustrative, not limiting in scope. In various embodiments, one or more of the above described limitations, have been reduced or eliminated, while other embodiments are directed to other improvements.

A semiconductor component includes a semiconductor substrate having a substrate contact on a first side (circuit side), an integrated circuit in electrical communication with the substrate contact, and a through wire interconnect (TWI) bonded to the substrate contact. The through wire interconnect (TWI) includes a via through the substrate contact and through the substrate to a second side (back side) thereof, a wire in the via bonded to the substrate contact, and a contact on the wire accessible from the second side of the substrate. A bonded connection between the wire and the substrate contact can comprise a ball bond, a wedge bond, a ribbon bond, or a compressed flange bond.

The through wire interconnect (TWI) also includes a bonding member on the substrate contact and the wire, configured to secure the wire to the substrate contact, and provide a bonding structure for bonding to the through wire interconnect (TWI) to other components. The through wire interconnect (TWI) also includes a dielectric material in the via surrounding and electrically insulating the wire. The semiconductor component can be used to fabricate stacked semiconductor components, wherein through wire interconnects (TWI) provide signal transmission structures, and bonding structures between adjacent stacked components as well.

A stacked semiconductor component includes a semiconductor substrate, and at least one second semiconductor substrate stacked on the semiconductor substrate, and bonded to a through wire interconnect on the semiconductor substrate. In addition, the stacked semiconductor component can be constructed as an integrated system, wherein each semiconductor substrate performs a different electrical function in the stacked semiconductor component (e.g., memory, processing, imaging etc.). A redistribution layer RDL semiconductor component includes a terminal contact on a semiconductor substrate in electrical communication with a through wire interconnect on the semiconductor substrate.

Another stacked semiconductor component includes a plurality of stacked semiconductor substrates having bonded through wire interconnects on adjacent substrates. A wire bonded semiconductor component includes a package substrate, and a semiconductor substrate having a through wire interconnect wire bonded to the package substrate. A flip chip semiconductor component includes a package substrate, and a semiconductor substrate having a through wire interconnect flip chip bonded to the package substrate. A face to face stacked semiconductor component includes two components in a face to face configuration with terminal contacts on opposing sides. A back to back stacked semiconductor component includes two components in a back to back configuration with terminal contacts on opposing sides. With any stacked semiconductor component, at least some of the through wire interconnects can include electrically isolated substrate contacts, configured to reduce capacitance and noise on signals transmitted through the stacked semiconductor component.

A method for fabricating a semiconductor component with a through wire interconnect includes the steps of providing a semiconductor substrate with a substrate contact, forming a via through the substrate contact and part way through the substrate, placing the wire in the via, and bonding the wire to the substrate contact. The method also includes the steps of placing a dielectric material in the via,

thinning the substrate from a second side to expose at least a portion of the wire to form a contact, and forming a bonding member on the wire and the substrate contact.

A system for fabricating a semiconductor component includes a semiconductor substrate having an integrated circuit, a substrate contact in electrical communication with the integrated circuit. The system also includes an etching system configured to form a via in the substrate contact and part way through the substrate. The system also includes a wire bonding apparatus configured to place the wire in the via, and to bond the wire to the substrate contact. The system also includes a thinning apparatus configured to thin the semiconductor substrate to expose at least a portion of the wire in the via.

In addition to the exemplary aspects and embodiments described above, further aspects and embodiments will become apparent by reference to the drawings and by study of the following descriptions.

BRIEF DESCRIPTION OF THE DRAWINGS

Exemplary embodiments are illustrated in the referenced figures of the drawings. It is intended that the embodiments and the figures disclosed herein are to be considered illustrative rather than limiting.

FIG. **1**A is a schematic plan view of a semiconductor component having through wire interconnects;

FIG. **1**B is a schematic side elevation view of the semiconductor component of FIG. **1**A;

FIG. **1**C is an enlarged schematic plan view taken along line **1**C of FIG. **1**A illustrating a through wire interconnect of the semiconductor component, with a bonding member cut away to show a ball bond;

FIG. **1**D is an enlarged schematic cross sectional view taken along section line **1**D-**1**D of FIG. **1**C illustrating a through wire interconnect;

FIG. **1**E is an enlarged schematic plan view equivalent to FIG. **1**C, illustrating an alternate embodiment wedge bonded through wire interconnect on the semiconductor component;

FIG. **1**F is an enlarged schematic cross sectional view taken along section line **1**F-**1**F of FIG. **1**E illustrating the wedge bonded through wire interconnect;

FIG. **1**G is an enlarged schematic plan view equivalent to FIG. **1**C, illustrating an alternate embodiment ribbon wire through wire interconnect on the semiconductor component;

FIG. **1**H is an enlarged schematic cross sectional view taken along section line **1**H-**1**H of FIG. **1**G illustrating the ribbon wire through wire interconnect;

FIG. **1**I is an enlarged schematic plan view equivalent to FIG. **1**C, illustrating an alternate embodiment compressed through wire interconnect on the semiconductor component;

FIG. **1**J is an enlarged schematic cross sectional view taken along section line **1**J-**1**J of FIG. **1**I illustrating the compressed through wire interconnect;

FIG. **1**K is an enlarged schematic plan view equivalent to FIG. **1**D, illustrating an alternate embodiment wire-on-bonding-member through wire interconnect on the semiconductor component;

FIG. **1**L is an enlarged schematic plan view equivalent to FIG. **1**D, illustrating an alternate embodiment double-bump through wire interconnect on the semiconductor component;

FIG. **1**M is an enlarged schematic plan view equivalent to FIG. **1**D, illustrating an alternate embodiment cap-member through wire interconnect on the semiconductor component;

FIGS. **2**A-**2**P are schematic cross sectional views illustrating steps in a method for fabricating a semiconductor component with a through wire interconnect;

FIGS. **2**Q-**2**T are schematic cross sectional views illustrating steps in a method for fabricating a semiconductor component with a compressed wire through wire interconnect;

FIG. **3**A is a schematic plan view taken along line **3**A-**3**A of FIG. **2**A illustrating multiple semiconductor substrates on a wafer for performing a wafer level fabrication method;

FIG. **3**B is an enlarged schematic plan view taken along line **3**B-**3**B of FIG. **28** illustrating an offset via configuration on a substrate contact;

FIGS. **3**C-**3**F are enlarged schematic plan views equivalent to FIG. **3**B, illustrating alternate via configurations, including multiple vias, on substrate contacts;

FIG. **3**G is an enlarged schematic cross sectional view taken along section line **3**G-**3**G of FIG. **2**D illustrating a bonding wire used in the fabrication of through wire interconnects;

FIG. **3**H is an enlarged schematic cross sectional view equivalent to FIG. **3**G illustrating an alternate embodiment insulated bonding wire;

FIGS. **3**I and **3**J are schematic cross sectional views illustrating alternate embodiment co-axial through wire interconnects;

FIG. **4**A is a schematic cross sectional view of a semiconductor component constructed using the method of FIGS. **2**A-**2**P;

FIG. **4**B is a schematic cross sectional view of a stacked semiconductor component constructed using the semiconductor component of FIG. **4**A;

FIG. **5** is a schematic cross sectional view of a stacked wire bonded FBGA semiconductor component constructed using the stacked semiconductor component of FIG. **4**B;

FIG. **6** is a schematic cross sectional view of a stacked flip chip bonded FBGA semiconductor component constructed using the stacked semiconductor component of FIG. **4**B;

FIG. **7** is a schematic cross sectional view of a stacked redistribution layer (RDL) chip scale (CSP) semiconductor component constructed using the stacked semiconductor component of FIG. **4**B with an added RDL layer;

FIG. **8** is a schematic cross sectional view of a four die stacked semiconductor component;

FIG. **9** is a schematic cross sectional view of a four die stacked redistribution layer (RDL) chip scale (CSP) semiconductor component;

FIG. **10** is a schematic cross sectional view of a four die wire bonded stacked semiconductor component constructed;

FIG. **11** is a schematic cross sectional view of a four die stacked flip chip bonded semiconductor component;

FIG. **12** is a schematic cross sectional view of a two die stacked face to face semiconductor component with terminal contacts on opposing sides;

FIG. **13** is a schematic cross sectional view of a two die stacked back to back semiconductor component with terminal contacts on opposing sides; and

FIG. **14** is a schematic view illustrating a system for fabricating semiconductor components with through wire interconnects.

DETAILED DESCRIPTION OF THE PREFERRED EMBODIMENTS

As used herein, "semiconductor component" means an electronic element that includes a semiconductor substrate. "Semiconductor substrate" means an electronic element, such as a semiconductor die, or a semiconductor package that includes integrated circuits and semiconductor devices. "Interconnect" means an electrical element which electri-

cally connects different electrical elements and transmits signals between these elements. "Wafer-level" means a process conducted on an element, such as a semiconductor wafer, containing multiple semiconductor substrates. "Die level" means a process conducted on a singulated element, such as a singulated semiconductor die or package. "Chip scale" means having an outline about the same as that of a semiconductor die. "Wafer size" means having an outline about the same as that of a semiconductor wafer.

Referring to FIGS. **1A-1D**, a semiconductor component **10** (FIG. **1A**) is illustrated. The semiconductor component **10** (FIG. **1A**) includes a semiconductor substrate **12** (FIG. **1B**) and a plurality of through wire interconnects **14** (FIG. **1B**) on the semiconductor substrate **12**.

The semiconductor substrate **12** (FIG. **1B**) can comprise a conventional semiconductor die, or a thinned semiconductor die, having integrated circuits **22** (FIG. **1D**) constructed in a desired electrical configuration using active semiconductor devices such as transistors. For example, the semiconductor substrate **12** (FIG. **1B**) can comprise a high speed digital logic device, such as a dynamic random access memory (DRAM), a static random access memory (SRAM), a flash memory, a microprocessor, a digital signal processor (DSP), or an application specific integrated circuit (ASIC). In addition, the semiconductor substrate **12** (FIG. **1B**) can comprise a tested die that has been certified as a known good die.

As shown in FIG. **1A**, in the illustrative embodiment, the semiconductor substrate **12** is a generally rectangular shaped die having opposed lateral edges and opposed longitudinal edges. However, the semiconductor substrate **12** (FIG. **1A**) can have any polygonal shape, such as square or triangular, and can also have a circular or oval shape. In addition, the semiconductor substrate **12** can comprise a full thickness semiconductor die or a thinned semiconductor die. As shown in FIG. **1D**, the semiconductor substrate **12** includes a circuit side **16** ("first side" in some of the claims), and a back side **18** ("second side" in some of the claims).

As also shown in FIG. **1A**, the semiconductor substrate **12** includes a plurality of substrate contacts **20** on the circuit side **16**, which in the illustrative embodiment comprise the device bond pads. Alternately, rather than being the device bond pads, the substrate contacts **20** can comprise redistribution contacts (i.e., contacts formed in conjunction with a redistribution layer (RDL)). In addition, the substrate contacts **20** can comprise a highly-conductive, wire-bondable metal, such as aluminum or copper. The substrate contacts **20** can also comprise stacks of different metals, such as aluminum-nickel-gold, aluminum-nickel-solder, and copper-palladium.

As another alternative, at least some of the substrate contacts **20** (FIG. **1A**) can comprise special purpose contacts formed specifically for constructing the through wire interconnects **14**. For example, the substrate contacts **20** can comprise electrically isolated contacts, that are not in electrical communication with the integrated circuits **22** on the semiconductor substrate **12**. As will be further explained, this concept can be employed in stacked components to reduce unwanted capacitance, noise, bleed off voltage and bleed off current.

For simplicity, the semiconductor substrate **12** (FIG. **1A**) is illustrated with only four substrate contacts **20** (FIG. **1A**) arranged in a single row. However, in actual practice the semiconductor substrate **12** (FIG. **1A**) can include tens of substrate contacts **20** (FIG. **1A**) arranged in a desired configuration, such as a center array, an edge array or an area array. Also in the illustrative embodiment, the substrate contacts **20** (FIG. **1A**) have a generally rectangular peripheral outline and angled corners. However, as with the semiconductor substrate **12** (FIG. **1A**), the substrate contacts **20** (FIG. **1A**) can have any polygonal shape including square, circular, triangular and oval. In addition, a size of the substrate contacts **20** (FIG. **1C**) can be selected as required. For example, each substrate contact **20** (FIG. **1C**) can have a length (L) (FIG. **1C**) of from about 50 μm to 200 μm and a width (W) (FIG. **1C**) of from about 50 μm to 200 μm. Also in FIG. **1A**, each substrate contact **20** has an associated through wire interconnect **14**. However, the through wire interconnects **14** can also be formed on only selected substrate contacts **20**. For example, only the substrate contacts **20** having a selected output or input configuration (e.g., Vss, Vcc) can be equipped with a through wire interconnect **14**.

As shown in FIG. **1D**, the substrate contacts **20** can be in electrical communication with internal conductors **24** located within the semiconductor substrate **12** proximate to the circuit side **16**. In addition, the internal conductors **24** are in electrical communication with the integrated circuits **22** in the semiconductor substrate **12**. The internal conductors **24** (FIG. **1D**) can be part of the internal structure of the semiconductor substrate **12**, and can comprise a highly conductive metal, such as aluminum or copper. Further, a die passivation layer **26** (FIG. **1D**) proximate to the circuit side **16** protects the internal conductors **24** (FIG. **1D**) and the integrated circuits **22** (FIG. **1D**). The die passivation layer **26** (FIG. **1D**) can comprise an electrically insulating material, such as BPSG (borophosphosilicate glass), a polymer or an oxide. In addition, the die passivation layer **26** (FIG. **1D**) includes openings **44** (FIG. **1D**) aligned with the substrate contacts **20** which provide access to the substrate contacts **20**. All of the elements of the semiconductor substrate **12** including the integrated circuits **22** (FIG. **1D**), the internal conductors **24** (FIG. **1D**), and the die passivation layer **26** (FIG. **1D**), can be formed using well known semiconductor fabrication processes.

As also shown in FIG. **1D**, the through wire interconnect **14** includes a via **28** through the substrate contact **20** and the semiconductor substrate **12**, a wire **30** in the via **28**, a bonding member **32** on the wire **30** and the substrate contact **20**, and a dielectric material **36** in the via **28**. The via **28** (FIG. **1D**) extends through the substrate contact **20**, and through the full thickness of the semiconductor substrate **12**, from the circuit side **16** to the back side **18** thereof. In the illustrative embodiment, the via **28** (FIG. **1D**) is generally circular, and has an inside diameter (ID) which is about 1.5 to 3 times larger than the outside diameter (OD) of the wire **30** (FIG. **1D**). By way of example, the wire **30** (FIG. **1D**) can have an outside diameter (OD) of about 25 μm, and the via **28** (FIG. **1D**) can have an inside diameter (ID) of about 37.5 μm to 75 μm. In addition, a length of the via **28** (FIG. **1D**) is dependent on an overall thickness T of the semiconductor substrate **12** (FIG. **1D**). A representative range for the thickness T of the semiconductor substrate **12** (FIG. **1D**) can be from about 10 μm to 725 μm, depending on whether the semiconductor substrate **12** is a full thickness die or wafer, or a thinned die or wafer.

The via **28** (FIG. **1D**) can also include an insulating layer **34** (FIG. **1D**) formed on an inside diameter thereof, which electrically insulates the via **28** (FIG. **1D**) from the integrated circuits **22** (FIG. **1D**), and other electrical elements on the semiconductor substrate **12**. The insulating layer **34** (FIG. **1D**) can comprise an electrically insulating material, such as a polymer (e.g., polyimide or parylene) or an oxide (e.g., SiO_2). As will be further explained, the wire **30** (FIG.

1D), rather than the via **28** (FIG. **1**D), or in addition to the via **28** (FIG. **1**D), can be electrically insulated.

In FIG. **1**C, the via **28** is illustrated as being located in an upper left hand corner of the substrate contact **20**. In other words, the via **28** is offset in both x and y directions from a center of the substrate contact **20**. In this case, the via **28** can have an inside diameter (ID) (FIG. **1**D) that is about one half of the width (L) (FIG. **1**C) of the substrate contact **20** (FIG. **1**C). Alternately, as shown in FIG. **3**C, a via **28**A can be located in the center **48** (FIG. **3**C) of the substrate contact **20**. Further, multiple vias **28**B (FIG. **3**D), **28**C (FIG. **3**E) or **28**D (FIG. **3**F), can be formed in the same substrate contact **20**.

As shown in FIG. **1**D, the wire **30** is located along a longitudinal axis **70** (FIG. **2**E) of the via **28**, and extends across the entire length of the via **28**. The wire **30** (FIG. **1**D) can be held in place in the via **28** (FIG. **1**D) by the dielectric material **36** (FIG. **1**D), which fills the via **28** (FIG. **1**D) and surrounds the wire **30** (FIG. **1**D). In addition, the wire **30** (FIG. **1**D) has a first end **38** (FIG. **1**D) extending out of the via **28** (FIG. **1**D) and bonded to the substrate contact **20** (FIG. **1**D), and a second end **40** (FIG. **1**D) extending just outside of the via **28** proximate to the back side **18** (FIG. **1**D) of the semiconductor substrate **12**.

The through wire interconnect **14** (FIG. **1**D) also includes a bonded connection **42** (FIG. **1**D) between the first end **38** (FIG. **1**D) of the wire **30** and the substrate contact **20**. In addition, the second end **40** (FIG. **1**D) of the wire **30** can comprise a generally spherically shaped contact ball **64**, such as a "free air ball" formed using an electronic flame off (EFO) process to be hereinafter described.

In the through wire interconnect **14** (FIG. **1**D), the bonded connection **42** (FIG. **1**D) comprises a ball bond formed using a wire bonding process, such as thermosonic wire bonding. Alternately, a through wire interconnect **14**A (FIGS. **1**E and **1**F) can include a bonded connection **42**A (FIGS. **1**E and **1**F) in the form of a wedge bond formed using ultrasonic wire bonding. As another alternative, a through wire interconnect **14**B (FIGS. **1**G and **1**H) can include a ribbon wire **30**B (FIGS. **1**G and **1**H) such as a bonding ribbon, and a bonded connection **42**B (FIGS. **1**G and **1**H) can comprise a ribbon wire bond. As another alternative, a through wire interconnect **14**C (FIGS. **1**I and **1**J) can include a compressed wire **30**C (FIGS. **1**I and **1**J), and a bonded connection **42**C (FIGS. **1**I and **1**J) can be in the form of a stud bump and a compression flange on the compressed wire **30**C (FIGS. **1**I and **1**J).

A representative outside diameter (OD) (FIG. **1**D) of the wire **30** can be from about 12 μm to about 150 μm. In addition, the wire **30** (FIG. **1**D) can comprise a conventional wire material used in semiconductor packaging, such as solder alloys, gold, gold alloys, copper, copper alloys, silver, silver alloys, aluminum, aluminum-silicon alloys, and aluminum-magnesium alloys. In addition, the wire **30** (FIG. **1**D) can comprise a metal, or a metal alloy, that does not contain reductions of hazardous substances (ROHS), such as lead. Exemplary ROHS free metals include lead free solders, such as 97.5% Sn2.5% Ag. Other ROHS free metals include gold, copper and alloys of these metals such as copper coated with a layer of flash gold. Also, the melting point of the wire **30** (FIG. **1**D) should preferably be greater than that of the substrate contact **20**.

As also shown in FIG. **1**D, in the through wire interconnect **14**, the bonding member **32** is located next to the via **28**, and is bonded to the substrate contact **20** in a right, lower quadrant of the substrate contact **20**. Alternately, the bonding member **32** (FIG. **1**D) can be centered on the substrate contact **20** (FIG. **1**D) and on the via **28** (FIG. **1**D), or located on any portion of the substrate contact **20** (FIG. **1**D) or the via **28** (FIG. **1**D). The bonding member **32** (FIG. **1**D) bonds portions of the wire **30** (FIG. **1**D) to the substrate contact **20** (FIG. **1**D). In addition, the bonding member **32** (FIG. **1**D) functions as a securing and supporting structure for the wire **30** (FIG. **1**D), and as a bonding structure for bonding the through wire interconnect **14** (FIG. **1**D) to an external electrical element, such as contacts on a support substrate, or another through wire interconnect on another semiconductor component. The bonding member **32** (FIG. **1**D) preferably comprises a non oxidizing, bondable material such as gold or platinum, or a reflow material, such as solder.

In the illustrative embodiment, the bonding member **32** (FIG. **1**D) comprises a stud bump, or a ball bump, bonded to the substrate contact **20**. In this case, the bonding member **32** (FIG. **1**D) can be formed using a wire bonder, a stud bumper, or a ball bumper. Alternately, the bonding member **32** (FIG. **1**D) can comprise a solder joint, a welded connection, or a conductive polymer connection, formed using a bonding process, such as thermal or pressure bonding to the substrate contact **20**. In FIG. **1**D, the bonding member **32** has a diameter which is less than the length (L) and the width (W) of the substrate contact **20** (e.g., 25% to 75%), such that it covers only a portion of the substrate contact **20**, and does not cover the via **28**. However, as shown in FIGS. **1**E and **1**F, a bonding member **32**A can also be configured to substantially cover the substrate contact **20** and the via **28**.

Referring to FIGS. **1**E and **1**F, an alternate embodiment wedge bonded through wire interconnect **14**A is substantially similar to the through wire interconnect **14** (FIG. **1**D), but includes a wire **30**A (FIG. **1**F) that is wedge bonded to the substrate contact **20**. In this embodiment, a bonded connection **42**A (FIG. **1**F) between the wire **30**A (FIG. **1**F) and the substrate contact **20** comprises a wedge bond formed using an ultrasonic bonding process. In addition, the through wire interconnect **14**A (FIG. **1**F) includes a bonding member **32**A, which is substantially similar to the bonding member **32** (FIG. **1**D). However, the bonding member **32**A (FIG. **1**E) covers almost all of the surface of the substrate contact **20** (FIG. **1**E). In addition, the bonding member **32**A (FIG. **1**F) covers a via **28**A (FIG. **1**F), and substantially all of the bonded connection **42**A (FIG. **1**F). The through wire interconnect **14**A also includes a dielectric material **36**A (FIG. **1**F) in the via **28**A which secures and electrically insulates the wire **30**A (FIG. **1**F). In addition, the through wire interconnect **14**A also includes a contact **64**A which comprises an exposed planar surface on an end of the wire **30**A.

Referring to FIGS. **1**G and **1**H, an alternate embodiment ribbon wire through wire interconnect **14**B is substantially similar to the through wire interconnect **14** (FIG. **1**D), but includes a ribbon wire **30**B (FIG. **1**G) in the form of a bonding ribbon. Further, a bonded connection **42**B (FIG. **1**H) between the ribbon wire **30**B (FIG. **1**G) and the substrate contact **20** comprises a wedge bond formed using a ribbon wire bonding process. In addition, the through wire interconnect **14**B (FIG. **1**G) includes a bonding member **32**B (FIG. **1**H), which is substantially similar to the bonding member **32** (FIG. **1**D). Further, the through wire interconnect **14**B (FIG. **1**G) includes a slot via **28**S (FIG. **1**FG), configured to accommodate the ribbon wire **30**B (FIG. **1**G). The through wire interconnect **14**B (FIG. **1**G) also includes a dielectric material **36**B (FIG. **1**H) in the slot via **28**A (FIG. **1**G), which secures and electrically insulates the ribbon wire **30**B (FIG. **1**G). In addition, the through wire interconnect **14**B also includes a contact **64**B which comprises an exposed surface of the ribbon wire **30**B.

Depending on the application, the ribbon wire **30**B (FIG. **1**G) can have a selected size from fine ribbon wire [13 μm×51 μm (0.5×2 mil)] to heavy ribbon wire [25.4 μm×254 mm (1×10 mil)]. In addition, the ribbon wire **30**B (FIG. **1**G) can comprise a conventional material such as gold, aluminum, silver or palladium. In general, the ribbon wire **30**B (FIG. **1**G) provides several advantages over round wire including high reliability bonded connections **42**B (FIG. **1**G), a high pull strength due to more surface contact, less cratering, minimal wire sway, longer wire spans, and a planar bonding surface for the bonding member **32**B (FIG. **1**H). In addition, the ribbon wire **30**B (FIG. **1**G) provides a low impedance and a low inductance due to the skin effect at high frequency (i.e., current density concentration in the surface layers of the conductors increases with frequency). Due to the skin effect, the surface area of the ribbon wire **30**B (FIG. **1**G) provides a larger surface area for current carrying relative to round wire. Automatic ribbon bonders are available from Kulicke & Soffa Industries, Inc. of Willow Grove, Pa.

Referring to FIGS. **1**I and **1**J, an alternate embodiment compressed wire through wire interconnect **14**C is substantially similar to the through wire interconnect **14** (FIG. **1**D), but includes a compressed wire **30**C (FIG. **1**J) such as a stud bump, wedged into a via **28**CO. In this embodiment, the substrate **12** has a thickness TC that is ultra thin (e.g., 10-100 μm). In addition, a depth of the via **28**CO can be only slightly greater than an initial diameter of the compressed wire **30**C. Also in this embodiment, a bonding member **32**C (FIG. **1**J) is formed integrally with the compressed wire **30**C (FIG. **1**J), and a bonded connection **42**C (FIG. **1**J) comprises a flanged portion of the bonding member **32**C (FIG. **1**J) bonded to the substrate contact **20**. A diameter d of the bonding member **32**C (FIG. **1**J) is slightly greater than the inside diameter ID (FIG. **1**J) of the via **28**CO. The compressed wire through wire interconnect **14**C (FIG. **1**J) also includes a contact **64**C which comprises an exposed surface of the compressed wire **30**C.

Referring to FIG. **1**K, an alternate embodiment wire-on-bonding-member through wire interconnect **14**D is substantially similar to the through wire interconnect **14** (FIG. **1**D), but includes a wire **30**D bonded to a top portion of a bonding member **32**D. In this embodiment, a bonded connection **42**D is formed between the wire **30**D and a top portion of the bonding member **32**D. For example, the bonding member **32**D could comprise a stud bump bonded to the substrate contact **20**, and the bonded connection **42**D could comprise a ball bond formed on the stud bump. Alternately, the bonded connection **42**D can be formed anywhere on the bonding member **32**D such as in the center, or on an exterior surface thereof.

Referring to FIG. **1**L, an alternate embodiment double-bump through wire interconnect **14**E is substantially similar to the through wire interconnect **14** (FIG. **1**D), but includes a double bump **32**E. In this embodiment, a bonded connection **42**E comprises a wire **30**E within the double bump **32**E sandwiched between the stacked bumps of the double bump **32**E. Alternately, the bonded connection **42**E can be formed between the lowermost bump of the double bump **32**E and the substrate contact **20**. U.S. Pat. Nos. 5,496,775 and 6,717,245, both of which are incorporated herein by reference, disclose double bump structures and techniques.

Referring to FIG. **1**M, an alternate embodiment cap-member through wire interconnect **14**F is substantially similar to the through wire interconnect **14** (FIG. **1**D), but includes a cap member **33**F that encapsulates a bonding member **32**F and a bonded connection **42**F between a wire **30**F and the substrate contact **20**. The cap member **33**F can comprise an electrically conductive material such as solder or a conductive polymer. In this embodiment, the cap member **33**F can be used as an electrically conductive bonding structure for fabricating stacked components.

Referring to FIGS. **2**A-**2**P, steps in a method for fabricating the component **10** (FIG. **1**A) with through wire interconnects **14** (FIG. **1**A) is illustrated. Initially, as shown in FIG. **2**A, the semiconductor substrate **12** is provided substantially as previously described, with the substrate contact **20**, the passivation layer **26** and the internal conductor **24** in electrical communication with the integrated circuits **22** (FIG. **1**D). Alternately, rather than being electrically connected to the integrated circuits **22** (FIG. **1**D), for stacking applications, the substrate contact **20** can be electrically isolated. This concept will be further explained as the description proceeds.

In the illustrative embodiment, the method is performed at the wafer level on a semiconductor wafer **46** (FIG. **3**A) containing a plurality of semiconductor substrates **12**. However, it is to be understood that the method of the invention can be performed at the die level on singulated substrates, such as singulated bare dice and known good dice (KGD). Also in the illustrative embodiment, the semiconductor wafer **46** (FIG. **3**A) comprises a semiconductor material, such as silicon or gallium arsenide. In addition, the semiconductor substrates **12** (FIG. **3**A) are in the form of semiconductor dice having a desired electrical configuration, such as memory, application specific, or imaging and image sensing. However, it is to be understood that the method of the invention can be performed on other substrates including ceramic, plastic, tape, printed circuit board (PCB), metal lead frame, or flex circuit substrates. As shown in FIG. **2**A, the semiconductor substrate **12** includes the circuit side **16** with the substrate contacts **20** and die passivation layer **26** thereon, and the back side **18**.

Next, as shown in FIG. **2**B, the vias **28** are formed through the substrate contacts **20**, but only part way through the substrate **12**. The vias **28** can be formed using an etching process, a laser machining process, an ion milling process, a mechanical process (e.g., drilling, grinding, abrasion), or combinations of any of these processes. For example, the vias **28** can be formed using a dry etch process, such as a reactive ion etching (RIE) through a mask, such as a photo mask or a hard mask, having openings, which locate the vias **28** on the substrate contacts **20**. In this case, a first etch gas can be used to etch through the substrate contacts **20**, and a second etch gas can be used to etch part way through the semiconductor substrate **12**. In addition, parameters (e.g., time, temperature, etchant) of the dry etch process can be controlled such that a depth "D" of the vias **28** (FIG. **2**B) is endpointed within the semiconductor substrate **12** at a distance "S" (FIG. **2**B) from the back side **18**. With the wafer **46** and the semiconductor substrate **12** comprising silicon, reactive ion etching (RIE) can be performed in a reactor with an etch gas, such as CF_4, SF_6, Cl_2 or CCl_2F_2. Reactive ion etching (RIE) is sometimes referred to as "BOSCH" etching, after the German company Robert Bosch, which developed the original process.

Another method for forming the vias **28** (FIG. **2**B) combines etching and laser machining processes. For example, an etch mask (not shown) and an etching process can be used to form the vias **28** through the substrate contacts **20**. Depending on the material of the substrate contacts **20**, a wet etchant can be used. For substrate contacts **20** made of aluminum, one suitable wet etchant is H_3PO_4. Following etching through the substrate contacts **20**, a laser machining

process can be used to form the vias **28** part way through the semiconductor substrate **12**. One suitable laser system for performing the laser machining step is manufactured by XSIL LTD of Dublin, Ireland, and is designated a Model No. XISE 200. Another suitable laser system for performing the laser machining step is manufactured by Electro Scientific, Inc., of Portland, Oreg. and is designated a Model No. 2700. Following the laser machining step, a cleaning step can be performed in which the vias **28** (FIG. **2**B) are cleaned using a suitable wet or dry etchant. One suitable wet etchant with the semiconductor substrate **12** (FIG. **2**B) comprising silicon comprises tetramethylammoniumhydroxide (TMAH). U.S. Pat. No. 6,620,731, to Farnworth et al. which is incorporated herein by reference, further describes methods for forming the vias **28** (FIG. **2**B).

As shown in FIG. **3**B, in the illustrative embodiment the vias **28** are offset in x and y directions from the centers **48** of the substrate contacts **20**. This arrangement provides the most surface area on the substrate contacts **20** available for subsequently forming the bonded connections **42** (FIG. **1**C). As shown in FIG. **3**C, the vias **28**A can alternately be formed through the centers **48** of the substrate contacts **20**. In this case, the bonded connections **42**A (FIG. **1**F) can be radially offset from the centers **48** of the substrate contacts **20**. As shown in FIG. **3**D, two vias **28**B can also be formed on each substrate contact **20** for forming two through wire interconnects on each substrate contact **20**. As shown in FIG. **3**E, three vias **28**C can also be formed on each substrate contact **20** for forming three through wire interconnects on each substrate contact **20**. As shown in FIG. **3**F, four vias **28**D can also be formed on each substrate contact **20** for forming four through wire interconnects on each substrate contact **20**.

Next, as shown in FIG. **2**C, the insulating layers **34** can be formed in the vias **28**. The insulating layers **34** can comprise a polymer, such as polyimide or parylene, deposited using a suitable process, such as vapor deposition, capillary injection or screen-printing. Alternately, the insulating layers **34** can comprise a deposited oxide layer, such as a low temperature deposited oxide. As another alternative, the insulating layers **34** can comprise a grown oxide layer, such as silicon dioxide formed by oxidation of silicon.

As also shown in FIG. **2**C, a vent **50** can be formed from the back side **18** of the semiconductor substrate **12** into each via **28**. The vents **50** (FIG. **2**C) can be formed using a laser machining process, and the previously described laser systems. Alternately, the vents **50** (FIG. **2**C) can be formed using an etching process performed from the back side **18** of the semiconductor substrate **12**. As will be further explained, the vents **50** (FIG. **2**C) allow the wire **30** (FIG. **1**D) and the dielectric material **36** (FIG. **1**D) to be more easily placed in the via **28** (FIG. **2**C). For example, the vents **50** provide a pressure differential for venting trapped gases from the via **28** during placement of the wire **30** (FIG. **1**D) and during deposition of the dielectric material **36** (FIG. **1**D). In addition, the vents **50** help to draw and seat the wires **30** (FIG. **1**D) in vias **28**. The vents **50** (FIG. **1**D) also provide capillary action under a vacuum for depositing the dielectric material **36** into the vias **28**. Preferably, the vents **50** (FIG. **2**C) have a diameter that is less than the diameter of the wires **30** (FIG. **1**D). In addition, the diameter of the vents **50** (FIG. **2**C) can be selected to provide seats for the second ends **40** of the wires **30**. A representative diameter of the vents **50** (FIG. **2**C) can be from 5 μm to 15 μm. In FIG. **2**C, the vents **50** are tapered from the back side **18** of the semiconductor substrate **12**, as would occur with a laser machining process, wherein lasered openings are larger at the point of entry.

Next, as shown in FIG. **2**D, a wire bonder **52** having a bonding capillary **54** can be provided. Preferably the wire bonder **52** is configured to perform an ultra fine pitch (e.g., <65 μm) wire bonding process. Suitable wire bonders are manufactured by Kulicke & Soffa Industries Inc. of Willow Grove, Pa., and Palomar of Carlsbad, Calif. One suitable wire bonder is a model "8098" large area ball bonder manufactured by Kulicke & Soffa Industries Inc., having a total bond placement accuracy of about +/−5 μm at pitches down to about 65 μm. Bonding capillaries are available from SPT (Small Precision Tools) of Petaluma, Calif., and from Kulicke & Soffa Industries Inc.

The wire bonder **52** (FIG. **2**D) and the bonding capillary **54** are configured to form a continuous length of bonding wire **58** into the wire **30** (FIG. **1**D) for the through wire interconnect **14** (FIG. **1**D). The bonding wire **58** can comprise a conventional wire material used in semiconductor packaging, such as the previously identified materials for the wire **30** (FIG. **1**D). As shown in FIG. **3**G, the bonding wire **58** can be generally circular in cross section with an outside diameter (OD) selected to allow placement of the wire **58** into the via **28**. A representative range for the outside diameter (OD) of the bonding wire **58** can be from about 12 μm to about 150 μm. As shown in FIG. **3**H, an alternate embodiment insulated bonding wire **58**A includes an electrically insulating outer layer **78**, such as a polymer. The insulating layer **78** on the bonding wire **58** can take the place of the insulating layers **34** (FIG. **1**D) in the vias **28** (FIG. **1**D). This type of bonding wire **58**A is available from Micro Bond of Canada.

As shown FIG. **3**I, the insulated bonding wire **58**A can be used to form a co-axial through wire interconnect **14**CA-**1**. The co-axial through wire interconnect **14**CA-**1** (FIG. **3**I) includes a via **28**CA (FIG. **3**I) through the substrate contact **20** and an insulating layer **34**CA (FIG. **3**I) on the via **28**CA (FIG. **3**I) substantially as previously described for the via **28** (FIG. **1**D) and the insulating layer **34** (FIG. **1**D). The co-axial through wire interconnect **14**CA-**1** also includes a dielectric material **36**CA, which secures the insulated bonding wire **58**A (FIG. **3**I) in the via **28**CA (FIG. **3**I) substantially as previously described for dielectric material **36** (FIG. **1**D). The co-axial through wire interconnect **14**CA-**1** also includes a co-axial conductor **31**CA (FIG. **3**I), which comprises an additional metal layer on the insulating layer **34**CA (FIG. **3**I). The co-axial conductor **31**CA (FIG. **3**I) forms a shield which confines radiation formed by a transverse electromagnetic (TEM) wave during transmission of electromagnetic signals through the wire **58**A (FIG. **3**I). The co-axial through wire interconnect **14**CA-**1** (FIG. **3**I) can also be used to transmit first signals through the wire **58**A (FIG. **3**I), and to transmit second signals through the co-axial conductor **31**CA (FIG. **3**I).

As shown in FIG. **3**J, an alternate embodiment co-axial through wire interconnect **14**CA-**2** is substantially similar to the co-axial through wire interconnect **14**CA-**1** (FIG. **3**I), but includes the wire **30** (un-insulated as previously described), and an additional insulating layer **35**CA on the co-axial conductor **31**CA (FIG. **3**J). Again, the co-axial conductor **31**CA (FIG. **3**J) forms a shield which confines radiation formed by a transverse electromagnetic (TEM) wave during transmission of electromagnetic signals through the wire **30** (FIG. **3**I). The co-axial through wire interconnect **14**CA-**2** (FIG. **3**J) also allows first signals to be transmitted through the wire **30** (FIG. **3**J), and second signals to be transmitted through the co-axial conductor **31**CA (FIG. **3**I).

Referring to FIG. **2**D, the bonding capillary **54** is movable in x, y and z directions responsive to signals from a

controller **80** of the wire bonder **52**. The bonding capillary **54** includes an elongated opening **60** having an inside diameter about twice the diameter of the bonding wire **58**, and an enlarged, chamfered terminal portion. The wire bonder **52** also includes wire clamps (not shown) operably associated with the bonding capillary **54**, which are configured to open and close about the bonding wire **58** responsive to signals from the controller **80**. U.S. patent application Ser. No. 11/102,408, filed on Apr. 8, 2005, which is incorporated herein by reference, provides further details of the wire bonder **52** and the bonding process to be hereinafter described.

As shown in FIG. **2**D, the wire bonder **52** also includes an electronic flame off (EFO) wand **56** configured to generate an electronic spark **62** for forming the contact ball **64** on a terminal portion of the bonding wire **58**. The contact ball **64** will subsequently form the first end **38** (FIG. **1**D) of the wire **30**. The contact ball **64** is also known in the art as a "free air ball" (FAB). A diameter of the contact ball **64** will be dependent on the diameter of the bonding wire **58**, with from 1.5 to 4 times the diameter of the bonding wire **58** being representative.

Next, as shown in FIG. **2**E, an alignment step can be performed in which the bonding capillary **54** is aligned with the via **28**. The alignment step can be performed using an automated alignment system **82** (FIG. **2**D) of the wire bonder **52** (FIG. **2**D). In addition, the semiconductor wafer **46** (FIG. **3**A) with the semiconductor substrates **12** thereon, can be placed on a work holder **68** (FIG. **2**E) of the wire bonder **52** (FIG. **2**D). During the alignment step, the position of the via **28** (FIG. **2**E) can be ascertained by the automated alignment system **82** of the wire bonder **52**, and the bonding capillary **54** can be moved in x and y directions, such that the center of the contact ball **64** aligns with the longitudinal axis **70** (FIG. **2**E) of the via **28**. Also during the alignment step, the bonding capillary **54** can be operated to position the bonding wire **58** such that a terminal portion of the bonding wire **58** has a desired tail length TL (FIG. **2**E). The tail length TL can be selected to be slightly greater (e.g., 1 to several microns) than the depth D (FIG. **2**B) of the via **28** (FIG. **2**E).

Next, as shown in FIG. **2**F, a placing step can be performed in which the bonding capillary **54** is moved in a z-direction, as indicated by arrow **76**, to place the tail length TL of the bonding wire **58** into the via **28**. In addition, the placing step can be performed such that the contact ball **64** contacts a bottom surface **74** (FIG. **2**F) of the via **28**. During the placing step, the vent **50** (FIG. **2**F) helps to maintain a positive air or gas flow through the via **28**, which facilitates placement of the tail length TL (FIG. **2**E) of the bonding wire **58** into the via **28**. In addition, the vent **50** can be formed with a surface which seats the contact ball **64** on the bottom surface **74** (FIG. **2**F) of the via **28**. As an alternative to moving the bonding capillary **54** (FIG. **2**F) in the z-direction, the placing step can be performed by maintaining the bonding capillary **54** in a stationary position over the via **28**, and then spooling the bonding wire **58** into the via **28**.

Next, as shown in FIG. **2**G, a looping step can be performed in which the wire clamps (not shown) of the wire bonder **52** (FIG. **2**D) are opened, and the bonding capillary **54** is moved in x and z directions (and also in the y direction if required) into a position on the substrate contact **20** for making the bonded connection **42** (FIG. **2**H). The looping step can be performed using the alignment system **82** (FIG. **2**D) of the wire bonder **52** (FIG. **2**D). In this case, the controller **80** (FIG. **2**D) of the wire bonder **52** (FIG. **2**D) can be loaded with information on the desired locations of the bonded connections **42** (FIG. **2**H).

Next, as shown in FIG. **2**H, a bonding step can be performed in which the bonded connection **42** is formed on the substrate contact **20**. In the illustrative embodiment, the bonded connection **42** comprises a ball bond formed using thermosonic by the bonding capillary **54**. Alternately, as will by further explained, the bonded connection **42** can comprise a wedge bond, a ribbon wire bond, or a flanged portion of the bonding member **32**. The bonded connection **42** can also comprise a reflow, welded, metallurgical, mechanical or polymer connection formed using any suitable process known in the art.

Next, as shown in FIGS. **2**I and **2**J, a severing step can be performed in which the wire clamps of the wire bonder **52** (FIG. **2**D) are closed, and the bonding capillary **54** is moved as indicated by arrow **84** (FIG. **2**I) to sever the bonding wire **58** from the bonded connection **42**. FIG. **2**J illustrates the resultant wire **30** of the through wire interconnect **14** (FIG. **1**D). The wire **30** (FIG. **2**J) includes the first end **38** (FIG. **2**J) having the bonded connection **42** (FIG. **2**J) in the form of a ball bond on the substrate contact **20**. The wire **30** (FIG. **2**J) also includes the second end **40** (FIG. **2**J) having a contact in the form of the contact ball **64**, which is preferably seated in the via **28** in contact with the bottom surface **74** thereof.

Next, as shown in FIG. **2**K, a dielectric fill step can be performed in which the dielectric material **36** is deposited into the via **28** in viscous form and then cured to harden. The dielectric material **36** can comprise an electrically insulating curable polymer, such as a polyimide, an epoxy or a silicone. Also, the dielectric material **36** (FIG. **2**K) can include fillers, such as silicates, configured to reduce the coefficient of thermal expansion (CTE) and adjust the viscosity of the dielectric material. Suitable curable polymers are manufactured by Shinitsu of Japan, and Dexter Electronic Materials of Rocky Hill, Conn. Following curing, the dielectric material **36** (FIG. **2**K) provides a potting structure which secures and electrically insulates the wire **30** in the via **28**.

The dielectric material **36** (FIG. **2**K) can be injected into the via **28** in a viscous state, pulled by capillary action by vacuum directed through the vent **50**, and then cured. For example, a positive displacement mechanism such as a syringe, can be used to dispense a quantity of the dielectric material **36** (FIG. **2**K) into the via **28**. One suitable nozzle deposition apparatus, also known as a material dispensing system, is manufactured by Asymtek of Carlsbad, Calif. Other suitable deposition processes for depositing the dielectric material **36** (FIG. **2**K) into the via **28** include screen printing, stenciling and stereographic lithography.

Next, as shown in FIG. **2**L, a dielectric removal step can be performed to substantially remove the dielectric material **36** from the substrate contact **20**. The dielectric removal step can be performed using an etch process, such as reactive ion etching (RIE), plasma etching or wet etching. With an etch process an etchant, strips or cleans the excess dielectric material **36** from the substrate contact **20**.

Next, as shown in FIG. **2**M, a bonding member forming step can be performed in which the bonding member **32** is formed on the substrate contact **20** and on a portion of the wire **30**. The bonding member forming step can be performed to position the bonding member **32** on a desired portion of the substrate contact **20**. In addition, the bonding member **32** can be offset with respect to the via **28** or centered on the via **28**. As another alternative, and as shown in FIGS. **1**E and **1**F, a bonding member **32**A can cover the entire substrate contact **20**.

Preferably, the bonding member **32** (FIG. **2**M) comprises a non oxidizing easily bondable material, such as gold or platinum. The bonding member **32**, in addition to providing

an external bonding element for the through wire interconnect **14** (FIG. **1**D), also secures the wire **30** in the via **28**, and provides a security bond for the bonded connection **42**. In the illustrative embodiment, the bonding member **32** comprises a stud bump or a ball bump, formed using a wire bonder, a stud bumper or a ball bumper. For example, a bonding capillary similar to the bonding capillary **54** can be used to form a stud bump. As another example, a suitable stud bumper is a "WAFER PRO PLUS" high speed large area stud bumper manufactured by Kulicke & Soffa Industries Inc. of Willow Grove, Pa. As another example, suitable solder ball bumpers are manufactured by Pac Tech Packaging Technologies of Falkensee, Germany.

In the embodiment illustrated in FIG. **2**M, the bonded connection **42** has been made, and the bonding member **32** has been placed on the bonded connection **42**. However, the bonding member **32** can also be bonded to the substrate contact **20** first, and then the end **38** of the wire **30** bonded to the bonding member **32** second. In the case, the bonded connection **42** can also be located on any portion of the bonding member **32**, such as on the top surface thereof, rather than on the lower surface thereof as in FIG. **2**M. The through wire interconnect **14**D (FIG. **1**K) illustrates one such arrangement wherein the bonded connection **42**D is formed on the bonding member **32**D. Double bumping or stacked bumping techniques can also be used to form the bonding member **32**. For example, the through wire interconnect **14**E (FIG. **1**L) illustrates the double bump bonding member **32**E (FIG. **1**L).

Next, as shown in FIG. **2**N, a backside thinning step can be performed in which the semiconductor substrate **12** is thinned from the back side **18**, such that the via **28** is opened, and the contact ball **64** is exposed. In general, the backside thinning step can be performed to expose any portion of the wire **30** which can be used as a contact for making an electrical connection from the outside to the through wire interconnect **14**. The backside thinning step can be performed such that the thinned substrate **12** has a thickness of T. A representative range for the thickness T can be from about 10 μm to 725 μm. During the thinning step, and in subsequent steps to follow, the semiconductor wafer **46** (FIG. **3**A) can be mounted in a temporary carrier (not shown). For example, temporary carriers made of glass can be fused by heat and adhesives to the semiconductor wafer **46** (FIG. **3**A) to protect the circuit side **16** (FIG. **3**A) of the semiconductor substrate **12**. Suitable, temporary carriers are manufactured by 3-M Corporation of St. Paul, Minn., and others as well. As another alternative, for some steps of the method, the circuit side **16** of the wafer **46** (FIG. **3**A) can be protected by a removable material such as a tape or mask material applied to the semiconductor wafer **46**.

The backside thinning step of FIG. **2**N, can be performed using a chemical mechanical planarization (CMP) apparatus. One suitable CMP apparatus is manufactured by "ACCRETECH" of Tokyo, Japan, and is designated a model no. "PG300RM". Suitable CMP apparatus are also commercially available from Westech, SEZ, Plasma Polishing Systems, TRUSI and other manufacturers. The backside thinning step can also be performed using an etching process, such as a wet etching process, a dry etching process or a plasma etching process. As another alternative, a combination of planarization and etching can be performed. For example, a mechanical grinder can be used to remove the bulk of the material, followed by etching to remove grind damage. U.S. Pat. No. 6,908,784, which is incorporated herein by reference, further describes processes and equipment for performing the backside thinning step.

Next, as shown in FIG. **20**, an optional back side insulating step can be performed in which an insulating layer **86** is formed on the thinned backside **18** of the semiconductor substrate **12**. The insulating layer **86** can comprise a polymer layer such as polyimide or parylene, a glass such as BPSG, or an oxide such as silicon dioxide. In addition, the insulating layer can be formed using a suitable deposition process such as CVD, screen printing or taping. Further, the insulating layer **86** includes openings **88** which align with the contact balls **64**.

Next, as shown in FIG. **2**P, an optional polymer button forming step can be performed in which polymer buttons **90** are formed on the contact balls **64**. The button forming step can be performed using a suitable polymer, such as a silicone, a polyimide or an epoxy, and a process such as nozzle deposition or screen printing. Depending on the application, the polymer buttons **90** (FIG. **2**P) can provide electrical insulation and protection, an adhesive connection, or an electrical connection. If no electrical contact is made to the contact ball **64** (FIG. **2**P), the polymer buttons **90** can comprise an electrically insulating material. Alternately, the polymer buttons **90** (FIG. **2**P) can comprise an electrically conductive material, such as an anisotropic adhesive. The adhesive buttons **90** can also comprise an adhesive material for applications such as stacking and surface mounting.

Next, a singulating step, such as sawing, scribing, liquid jetting, or laser cutting through a liquid, can be performed to singulate a chip scale semiconductor component **92** (FIG. **4**A) from the wafer **46**. Alternately, a wafer sized component can be provided which contains multiple unsingulated semiconductor substrates **12**.

Referring to FIGS. **2**Q-**2**T, steps in a method for forming the compressed wire through wire interconnect **14**C (FIG. **1**J) are illustrated. Initially, as shown in FIG. **2**Q, the substrate **12**, the substrate contact **20** and the bonding capillary **54** are provided, as previously described. In addition, the via **28**CO is formed in the substrate **12** as previously described. However, in this case the depth d of the via **28**CO is very small, on the order of from 10 μm to 125 μm. Preferably, the outside diameter OD of the contact ball **64** of the bonding wire **58** is approximately equal to the depth d of the via **28**CO, and to the inside diameter ID of the via **28**CO. In this embodiment, it is preferable to compress the contact ball **64** into the via **28**CO, and to fill the via **28**CO with the metal of the contact ball **64**.

Next, as shown in FIGS. **2**R and **2**S, the bonding capillary **58** is operated to compress the contact ball **64** and the bonding wire **58** into the via **28**CO, forming the compressed wire **30**C, the bonded connection **42**C (FIG. **2**S) and the bonding member **32**C (FIG. **2**S). As shown in FIG. **2**T, following a substrate thinning step as previously described, the contact **64**C on the compressed wire **30**C is exposed. Alternately, rather than using the bonding capillary **54**, the compressed through wire interconnect **14**C can be fabricated by depositing a metal into the via **28**CO and then compressing the metal using a tamping tool.

As shown in FIG. **4**A, a chip scale semiconductor component **92** includes the semiconductor substrate **12** having a plurality of through wire interconnects **14**, which correspond to the locations of the substrate contacts **20**. The substrate contacts **20** can have any desired configuration including dense area arrays, such as edge arrays, center arrays, or perimeter arrays. The through wire interconnects **14** can be used as terminal contacts, which can be surface mounted to a supporting substrate, or stacked to other components. In addition, the bonding members **32** provide electrical connection points proximate to the circuit side **16**, and the

contact balls **64** provide electrical connection points proximate to the back side **18** of the semiconductor substrate **12**.

Referring to FIG. **4**B, a stacked semiconductor component **94** includes the semiconductor component **92**, and a bumped semiconductor die **96** stacked on the semiconductor component **92**. The bumped semiconductor die **96** can comprise a full or partial thickness die, having a plurality of bumped contacts **98** (e.g., stud bumps or ball bumps) on a circuit side **102** thereof, in electrical communication with the integrated circuits contained on the semiconductor die **96**. In addition, the bumped contacts **98** can be arranged in an area array, which corresponds to the area array of the through wire interconnects **14** on the semiconductor component **92**. Further, the bumped contacts **98** can be bonded to the contact balls **64** of the through wire interconnects **14** on the semiconductor component **92**.

The bumped contacts **98** (FIG. **4**B) can comprise a bondable metal such as gold, platinum or solder, or a conductive polymer, such as metal filled epoxy, which can be bonded to the contact balls **64** using a suitable process such as diffusion bonding, thermal bonding or reflow bonding. For example, the bumped contacts **98** can comprise gold stud bumps, and the contact balls **64** can comprise gold free air balls, such that a gold to gold diffusion bond can be formed. Further, an adhesive layer **100** (FIG. **4**B), such as a curable polymer underfill material, adhesively bonds the circuit side **102** (FIG. **4**B) of the semiconductor die **96** (FIG. **4**B) to the back side insulating layer **86** on the semiconductor component **92**.

The stacked semiconductor component **94** (FIG. **4**B) can be fabricated at the wafer level with a plurality of semiconductor dice **96** contained on a wafer, and the singulated components **92** then bonded to the semiconductor dice **96** on the wafer. In this case, a die attacher or an aligner bonder could be employed to place and bond the semiconductor components **92** to the semiconductor dice **96** contained on the wafer. In addition, the components **92** can be tested prior to the bonding process and certified as known good components (KGC) to improve the yield of the bonding process. Following the bonding process, the stacked semiconductor components **94** could be singulated from the wafer containing the semiconductor dice **96** with the semiconductor component **92** bonded thereto. Alternately, the semiconductor dice **96** and the semiconductor components **92** could both be singulated components. As another alternative, a wafer to wafer fabrication process could be employed wherein both the semiconductor dice **96** and the semiconductor components **92** are contained on mating wafers.

As mentioned previously, at least some of the substrate contacts **20** (FIG. **4**B) on the stacked semiconductor component **94** (FIG. **4**B) can be electrically isolated, and not in electrical communication with the integrated circuits **22** (FIG. **1**D) on the semiconductor substrate **12**. In this case, electrical signals can be transmitted through the stacked semiconductor component **94** (FIG. **4**B) without adding unwanted inductance or capacitance. For example, the semiconductor substrate **12** (FIG. **4**B) of the semiconductor component **92** (FIG. **4**B) can comprise a dynamic random access memory (DRAM). The DQ circuits on some DRAM's have up to 1 pf of capacitance added into the DQ circuits, to help offset the inductance added to the DRAM by wire bonds. In general, wire bonds have a high inductance but very low capacitance.

In the stacked component **94** (FIG. **4**B) capacitance could potentially be added each time a signal is transmitted through a substrate contact **20** (FIG. **4**B) associated with a DQ circuit. Similarly, noise, bleed off voltage, and bleed off current could potentially be added to the signals transmitted through the through wire interconnects **14** (FIG. **4**B). However, if selected substrate contact **20** are electrically isolated from the integrated circuits **22** (FIG. **1**D) as required, parasitics could be reduced. One method for electrically isolating a substrate contact **20** (FIG. **4**B) would be to etch or laser machine a trench around the perimeter of the substrate contact **20** (FIG. **4**B). Another method would be to incorporate programmable links, such as fuses, antifuses or gates, between the substrate contacts **20** (FIG. **1**D) and the integrated circuits **22** (FIG. **1**D). Yet another method would be to design and fabricate the substrate contact **20** as an electrically isolated pass through contact for stacking applications.

Referring to FIG. **5**, a wire bonded fine ball grid array (FBGA) semiconductor component **104** includes the stacked semiconductor component **94** wire bonded in a board on chip (BOC) configuration to a package substrate **106**. The package substrate **106** includes a plurality of terminal contacts **108**, such as solder balls, in a fine ball grid array. The terminal contacts **108** are in electrical communication with wire bonding pads **118** on the package substrate **106**. In addition, the package substrate **106** includes a wire bonding opening **116**, and a plurality of wires **110** that are wire bonded to the wire bonding pads **118** on the package substrate **106**, and to the bonding members **32** on the through wire interconnects **14** of the semiconductor component **92**. The wire bonded fine ball grid array (FBGA) semiconductor component **104** also includes a package encapsulant **112** on the package substrate **106**, which encapsulates the stacked semiconductor component **94**, and a wire bond encapsulant **114**, which encapsulates the wires **110** and associated wire bonds.

Referring to FIG. **6**, a flip chip bonded (FCIP) fine ball grid array (FBGA) semiconductor component **120** includes the stacked semiconductor component **94** flip chip bonded in a chip on board (COB) configuration to a package substrate **122**. The package substrate **122** includes a plurality of terminal contacts **124**, such as solder balls, in a fine ball grid array. The terminal contacts **124** are in electrical communication with flip chip bonding pads **128** on the package substrate **122**. In addition, the bonding members **32** on the through wire interconnects **14** of the semiconductor component **92** are flip chip bonded to the flip chip bonding pads **128** on the package substrate **122**. The semiconductor component **120** also includes the package encapsulant **112** on the package substrate **122**, which encapsulates the stacked semiconductor component **94**.

Referring to FIG. **7**, a redistribution layer (RDL) chip scale (CSP) semiconductor component **130** is substantially similar to the stacked semiconductor component **94** (FIG. **4**B). However, the redistribution layer (RDL) chip scale (CSP) semiconductor component **130** also includes terminal contacts **132**, such as solder balls in an area array. The terminal contacts **132** are in electrical communication with redistribution layer conductors **134** formed on the circuit side **16** of a semiconductor component **92**RDL. The semiconductor component **92**RDL is substantially similar to the semiconductor component **92** (FIG. **4**A) but also includes the redistribution layer conductors **134** in electrical communication with the bonding members **32** of the through wire interconnects **14**. The redistribution layer conductors **134** can be fabricated at the wafer level on the semiconductor wafer **46** (FIG. **3**A) containing the semiconductor component **92**.

Referring to FIG. **8**, a four die stacked semiconductor component **136** is substantially similar to the stacked semi-

conductor component **94** (FIG. **4**B). However, in this case the through wire interconnects **14** on three of the semiconductor components **92** are stacked in a three die stack. In addition, the three die stack is bonded to the bumped semiconductor die **96**. In the middle components **92**, the bonding members **32** and the vias **28** are centered on the substrate contacts **20** rather than being offset, substantially as previously described and shown in FIG. **3**C.

Referring to FIG. **9**, a four die RDL semiconductor component **138** is substantially similar to the RDL CSP semiconductor component **130** (FIG. **7**). However, in this case the through wire interconnects **14** on two additional semiconductor components **92** are stacked to the semiconductor component **92**RDL in a three die stack substantially as described for semiconductor component **136** (FIG. **8**).

Referring to FIG. **10**, a four die wire bonded FBGA semiconductor component **136** is substantially similar to the wire bonded FBGA semiconductor component **104** (FIG. **5**). However, in this case the through wire interconnects **14** on three of the semiconductor components **92** are stacked in a three die stack substantially as described for semiconductor component **136** (FIG. **8**). In addition, the three die stack is wire bonded to the package substrate **106**.

Referring to FIG. **11**, a four die flip chip bonded FBGA semiconductor component **142** is substantially similar to the flip chip bonded FBGA semiconductor component **120** (FIG. **6**). However, in this case the through wire interconnects **14** on the stacked semiconductor components **92** are stacked substantially as described for semiconductor component **136** (FIG. **8**). In addition, the lowermost semiconductor component **92** is flip chip bonded to the package substrate **122**.

Referring to FIG. **12**, a face to face stacked semiconductor component **160** is illustrated. The face to face stacked semiconductor component **160** includes a pair of RDL semiconductor components **92**RDL having the bonding members **32** of their through wire interconnects **14** bonded to one another in a face to face configuration. In addition, an underfill layer **162** is formed between the circuit sides **16** of the RDL semiconductor components **92**RDL for encapsulating and electrically insulating circuit sides and the bonded bonding members **32**. Further, terminal contacts **132** and RDL conductors **134** are formed on opposing back sides **18** of the RDL semiconductor components **92**RDL. The face to face stacked semiconductor component **160** thus includes terminal contacts **132** on opposing sides, which permits stacking or surface mounting from either side.

Referring to FIG. **13**, a back to back stacked semiconductor component **164** is illustrated. The back to back stacked semiconductor component **164** includes a pair of semiconductor components **92** having their back sides **18** bonded to one another using a suitable adhesive or underfill layer, substantially as previously described for the underfill layer **162** in FIG. **12**. In addition, the ball contacts **64** on the wires **30** of the through wire interconnects **14** of the semiconductor components **92**, are bonded to one another using a suitable bonding technique, such as a gold to gold diffusion bond substantially as previously described. Further, terminal contacts **132** and RDL conductors **134** are formed on the circuit sides **16** of the semiconductor components **92** in electrical communication with the wires **30** of the through wire interconnects **14**. In this embodiment, the bonding members **32** are omitted, but could also be included, and placed in electrical communication with the RDL conductors **134** and the terminal contacts **132**. The back to back stacked semiconductor component **164** thus includes terminal contacts **132** on opposing sides, which permits stacking or surface mounting from either side.

Referring to FIG. **14**, a system **144** for forming the through wire interconnect **14** in accordance with the method is illustrated. The system **144** includes the semiconductor substrate **12** and the substrate contact **20** on the substrate **12**. The system **144** also includes an etching system **146** configured to form the via **28** through the substrate contact **20** and part way through the substrate **12**. The system **144** also includes a vent forming system **148** such as a laser machining system or an etching system configured to form the vent **50**. The system **144** also includes the wire bonder **52** configured to form the contact ball **64**, to place the wire **30** in the via **28** and to form the bonded connection **42** between the wire **30** and the substrate contact **20**. The system **144** also includes a dielectric dispensing system **154**, such as a material dispensing system or screen printer, configured to dispense the dielectric material **36** into the via **28**. The system **144** also includes a bonding member forming system **152**, such as a stud bumper or a ball bonder, configured to form the bonding member **32** on the wire **30** and the substrate contact **20**. The system **144** also includes a thinning system **150**, such as a chemical mechanical planarization (CMP) system or etching system, configured to thin the substrate **12** from the backside **18** to expose the via **28** and the contact ball **64**.

Thus the invention provides improved semiconductor components, and methods and systems for fabricating the semiconductor components. While the invention has been described with reference to certain preferred embodiments, as will be apparent to those skilled in the art, certain changes and modifications can be made without departing from the scope of the invention as defined by the following claims.

What is claimed is:

1. A semiconductor component comprising:

a semiconductor substrate having an integrated circuit, a first side, a substrate contact on the first side in electrical communication with the integrated circuit, a second side, and a via extending through the substrate contact from the first side to the second side; and

a through wire interconnect on the substrate comprising a wire in the via, a bonded connection on the substrate contact between the wire and the substrate contact, and a contact on the wire proximate to the second side.

2. The semiconductor component of claim **1** wherein the through wire interconnect further comprises a bonding member bonded to the wire and to the substrate contact configured to secure the wire to the substrate contact and to provide a bonding structure for bonding to the through wire interconnect.

3. The semiconductor component of claim **1** further comprising a dielectric material in the via surrounding the wire.

4. The semiconductor component of claim **1** wherein the contact on the wire comprises a ball on an end of the wire.

5. The semiconductor component of claim **1** wherein the contact on the wire comprises an exposed surface on an end of the wire.

6. The semiconductor component of claim **1** wherein the bonded connection comprises a ball bond or a wedge bond.

7. The semiconductor component of claim **1** wherein the wire comprises a ribbon wire and the bonded connection comprises a ribbon wire bond.

8. The semiconductor component of claim **1** wherein the wire comprises a compressed wire and the bonded connection comprises a bonding flange on the compressed wire.

9. The semiconductor component of claim 1 further comprising a second substrate stacked on the semiconductor substrate having a second through wire interconnect bonded to the through wire interconnect.

10. The semiconductor component of claim 1 wherein the bonded connection comprises the wire between a first bump and a second bump.

11. The semiconductor component of claim 1 further comprising a bonding member bonded to the wire and to the substrate contact and a cap member encapsulating the bonding member.

12. The semiconductor component of claim 1 further comprising an insulating layer in the via or on the wire.

13. The semiconductor component of claim 1 wherein the through wire interconnect has a co-axial configuration with a co-axial conductor in the via electrically insulated from the wire.

14. A semiconductor component comprising:

a semiconductor substrate having a first side, a substrate contact on the first side, and a second side;

a via in the substrate contact and the substrate extending from the first side to the second side;

a wire in the via having a contact thereon proximate to the second side;

a bonded connection between the wire and the substrate contact; and

a bonding member on the wire and the substrate contact configured to secure the wire to the substrate contact and to provide a bonding structure for bonding to the through wire interconnect.

15. The semiconductor component of claim 14 wherein the bonding member comprises a stud bump, a ball bump or a solder ball.

16. The semiconductor component of claim 14 wherein the bonded connection comprises a ball bond, a wedge bond or a ribbon wire bond formed between the bonding member and the substrate contact.

17. The semiconductor component of claim 14 wherein the bonded connection comprises a bond formed between the bonding member and the wire.

18. The semiconductor component of claim 14 wherein the wire comprises a compressed wire and the bonded connection comprises a stud bump, a ball bump or a solder ball on the compressed wire.

19. The semiconductor component of claim 14 wherein the semiconductor substrate comprises a thinned semiconductor die.

20. The semiconductor component of claim 14 further comprising a terminal contact on the first side in electrical communication with the bonding member.

21. The semiconductor component of claim 14 further comprising an insulating layer in the via or on the wire configured to insulate the wire from the semiconductor substrate.

22. The semiconductor component of claim 14 further comprising an encapsulant in the via encapsulating the wire.

23. The semiconductor component of claim 14 further comprising an insulating layer on the second side having an opening aligned with the contact.

24. The semiconductor component of claim 14 further comprising a polymer button on the second side encapsulating the contact.

25. The semiconductor component of claim 14 wherein the contact on the wire comprises a ball contact on an end of the wire.

26. The semiconductor component of claim 14 wherein the contact on the wire comprises an exposed planar surface of the wire proximate to the second side.

27. The semiconductor component of claim 14 wherein the via is offset in x and y directions from a center of the substrate contact.

28. The semiconductor component of claim 14 wherein the via comprises a slot and the wire comprises a ribbon wire.

29. The semiconductor component of claim 14 wherein the via has a depth of from 10 μm to 125 μm and the wire comprises a compressed wire in the via having an end formed as a stud bump bonded to the substrate contact.

30. A semiconductor component comprising:

a semiconductor substrate having a circuit side, a back side, an integrated circuit, a substrate contact in electrical communication with the integrated circuit; and

a through wire interconnect on the semiconductor substrate configured to provide a conductive path from the substrate contact to the second side and a structure for bonding the substrate to a second substrate, the through wire interconnect comprising a via through the substrate contact and the substrate to the second side, a wire in the via, a contact on the wire in the via proximate to the second side, a bonded connection between the wire and the substrate contact, and a bonding member on the wire and the substrate contact.

31. The semiconductor component of claim 30 wherein the bonded connection comprises a ball bond or a wedge bond and the bonding member comprises a bump on the substrate contact.

32. The semiconductor component of claim 30 wherein the bonding member comprises a double bump on the substrate contact and the bonded connection comprises a bond between the wire and the double bump.

33. The semiconductor component of claim 30 wherein the bonding member comprises a first bump and a second bump and the bonded connection is located between the first bump and the second bump.

34. The semiconductor component of claim 30 wherein the bonded connection comprises a ribbon wire bond and the bonding member comprises a bump on the ribbon wire bond.

35. The semiconductor component of claim 30 further comprising an encapsulant encapsulating the wire in the via.

36. The semiconductor component of claim 30 further comprising a second semiconductor substrate on the semiconductor substrate having a second through wire interconnect bonded to the through wire interconnect.

37. The semiconductor component of claim 30 further comprising a second semiconductor substrate on the semiconductor substrate having a bumped contact bonded to the through wire interconnect.

38. The semiconductor component of claim 30 further comprising a plurality of through wire interconnects and a plurality of terminal contacts in an area array in electrical communication with the through wire interconnects.

39. The semiconductor component of claim 30 wherein the semiconductor substrate comprises a thinned die.

40. The semiconductor component of claim 30 further comprising an insulating layer on the second side having an opening aligned with the contact.

41. The semiconductor component of claim 30 further comprising an electrically conductive cap member on the bonding member and the substrate contact.

42. The semiconductor component of claim 30 further comprising a polymer button on the second side encapsulating the contact.

43. The semiconductor component of claim **30** wherein the contact comprises a ball or a planar surface of the wire.

44. The semiconductor component of claim **30** wherein the bonding member covers the bonded connection.

45. The semiconductor component of claim **30** wherein the bonded connection is formed by the bonding member.

46. A semiconductor component comprising:

a semiconductor substrate having a first side, a substrate contact on the first side, and a second side;

a via in the substrate contact and the substrate extending from the first side to the second side;

a wire in the via having a contact thereon proximate to the second side;

a bonded connection between the wire and the substrate contact configured to secure the wire to the substrate contact and to provide a bonding structure for bonding to the through wire interconnect; and

a co-axial conductor in the via electrically insulated from the wire.

47. The semiconductor component of claim **46** wherein the wire includes an insulating layer.

48. The semiconductor component of claim **46** wherein the via includes a second insulating layer electrically insulating the co-axial conductor.

49. A semiconductor component comprising:

a first substrate having a first side, a second side, a substrate contact on the first side, and a via extending through the substrate contact and the substrate from the first side to the second side;

a through wire interconnect on the first substrate comprising a wire in the via, a contact on the wire proximate to the second side, a bonded connection between the wire and the substrate contact, and a bonding member on the wire and the substrate contact; and

a second substrate stacked on the first substrate having a second contact bonded to the contact or to the bonding member.

50. The semiconductor component of claim **49** wherein the first substrate and the second substrate comprise semiconductor dice.

51. The semiconductor component of claim **49** wherein at least one substrate contact is electrically isolated from any integrated circuits on the first substrate.

52. The semiconductor component of claim **49** wherein the second substrate comprises a second through wire interconnect bonded to the contact.

53. The semiconductor component of claim **49** wherein the second substrate comprises a second through wire interconnect having a second bonding member bonded to the bonding member with the first substrate and the second substrate in a face to face configuration.

54. The semiconductor component of claim **49** wherein the second substrate comprises a second through wire interconnect having a second contact bonded to the contact with the first substrate and the second substrate in a back to back configuration.

55. The semiconductor component of claim **49** wherein the bonded connection comprises a ball bond or a wedge bond, and the bonding member comprises a stud bump on the ball bond or the wedge bond.

56. The semiconductor component of claim **49** wherein the wire comprises a ribbon wire, the bonded connection comprises a ribbon wire bond, and the bonding member comprises a stud bump on the ribbon wire bond.

* * * * *