US006528179B1

(12) **United States Patent**
Jimarez et al.

(10) **Patent No.: US 6,528,179 B1**
(45) **Date of Patent: Mar. 4, 2003**

(54) **REDUCTION OF CHIP CARRIER FLEXING DURING THERMAL CYCLING**

(75) Inventors: **Lisa J. Jimarez**, Newark Valley, NY (US); **Miguel A. Jimarez**, Newark Valley, NY (US)

(73) Assignee: **International Business Machines Corporation**, Armonk, NY (US)

(*) Notice: Subject to any disclaimer, the term of this patent is extended or adjusted under 35 U.S.C. 154(b) by 0 days.

(21) Appl. No.: **09/691,935**

(22) Filed: **Oct. 19, 2000**

Related U.S. Application Data

(63) Continuation-in-part of application No. 09/503,395, filed on Feb. 14, 2000.

(51) **Int. Cl.**[7] **H01L 29/12**; H01L 23/48

(52) **U.S. Cl.** **428/620**; 428/209; 428/616; 257/746; 257/778

(58) **Field of Search** 428/209, 620, 428/616; 257/746, 778

(56) **References Cited**

U.S. PATENT DOCUMENTS

5,136,470	A	8/1992	Sheridon et al.	
5,450,286	A	9/1995	Jacques et al.	361/760
5,571,608	A	11/1996	Swamy	361/760
5,760,465	A	6/1998	Alcoe et al.	361/760
5,773,884	A	6/1998	Andros et al.	361/760
5,877,043	A	3/1999	Alcoe et al.	361/760
5,987,742	A	11/1999	Acciai et al.	361/760
6,014,317	A	1/2000	Sylvester	361/760
6,027,590	A	2/2000	Sylvester et al.	361/760

OTHER PUBLICATIONS

Multi–Layer Substrate with Low Coefficient of Thermal Expansion, Nakamura et al., 2000 International Symposium on Mircroelect, pp. 235–240. No Date.

Primary Examiner—Cathy Lam
(74) *Attorney, Agent, or Firm*—Schmeisor, Olsen & Watts; Lawrence R. Fraley

(57) **ABSTRACT**

A method and structure for reducing chip carrier flexing during thermal cycling. A semiconductor chip is coupled to a stiff chip carrier (i.e., a chip carrier having an elastic modulus of at least about 3×10^5 psi), and there is no stiffener ring on a periphery of the chip carrier. Without the stiffener ring, the chip carrier is able to undergo natural flexing (in contrast with constrained flexing) in response to a temperature change that induces thermal strains due to a mismatch in coefficient of thermal expansion between the chip and the chip carrier. If the temperature at the chip carrier changes from room temperature to a temperature of about −40° C., a maximum thermally induced displacement of a surface of the chip carrier is at least about 25% less if the stiffener ring is absent than if the stiffener ring is present. Since a propensity for cracking of the stiff chip carrier increases as the thermally induced displacement increases, the present invention, which avoids use of the stiffener ring, improves a structural integrity of the chip carrier.

18 Claims, 10 Drawing Sheets

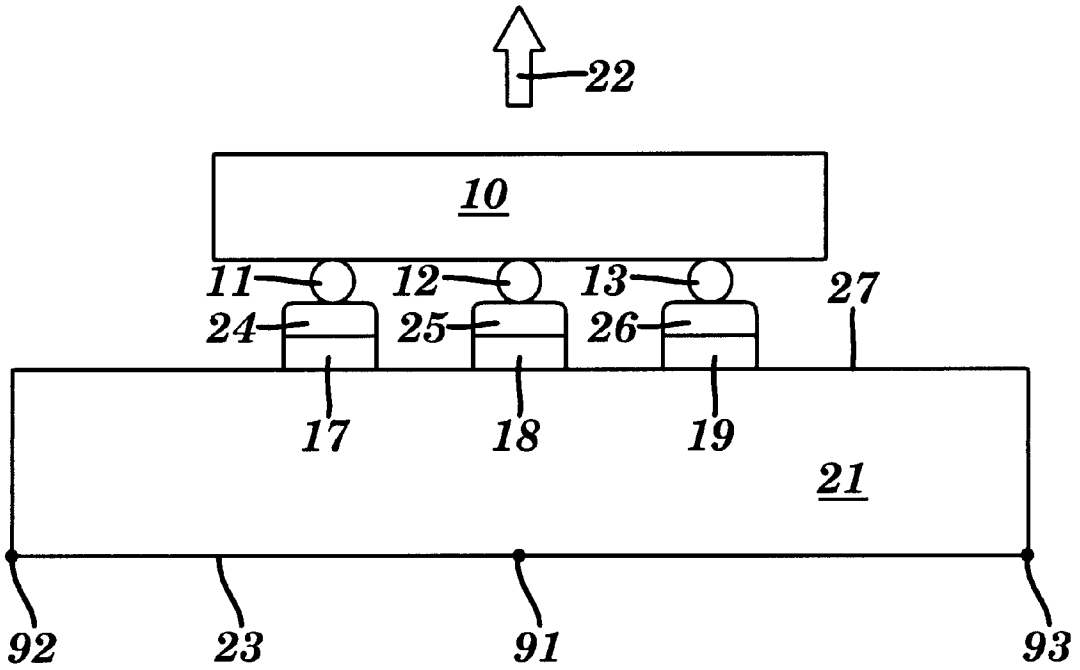

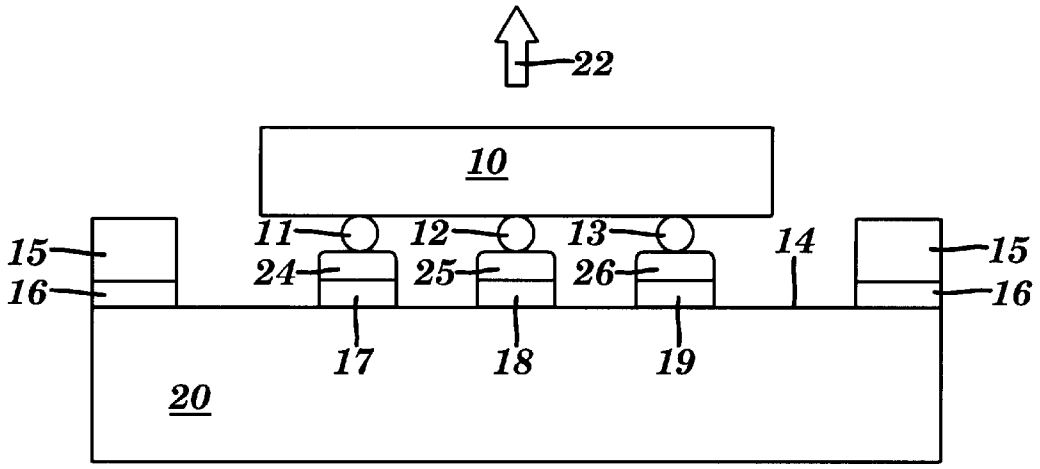

FIG. 1

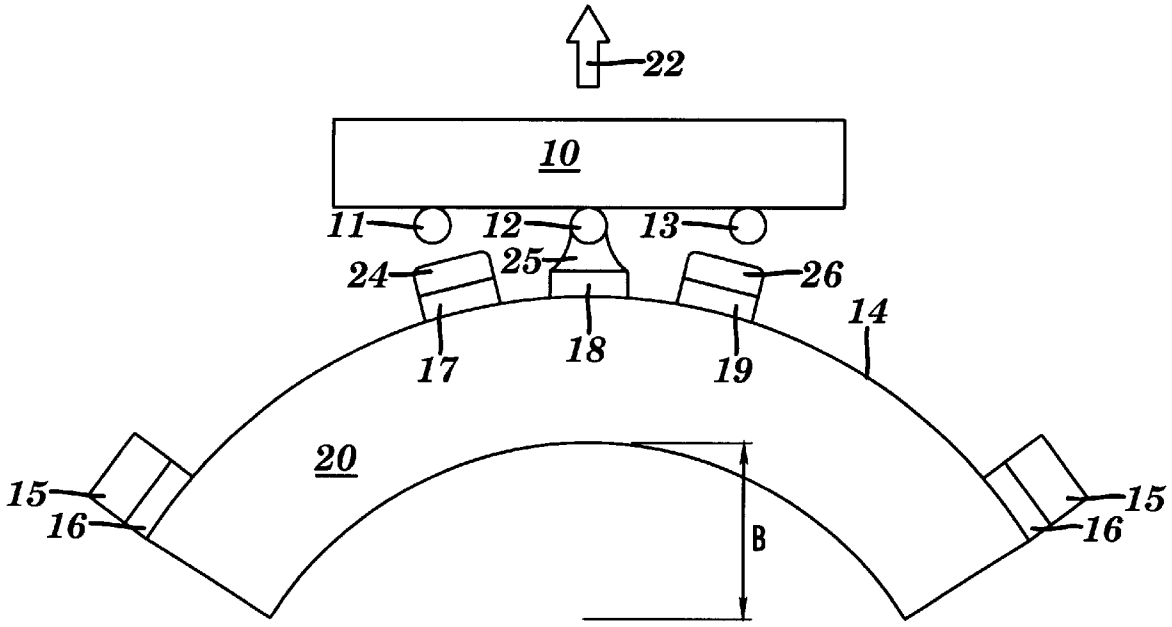

FIG. 2
RELATED ART

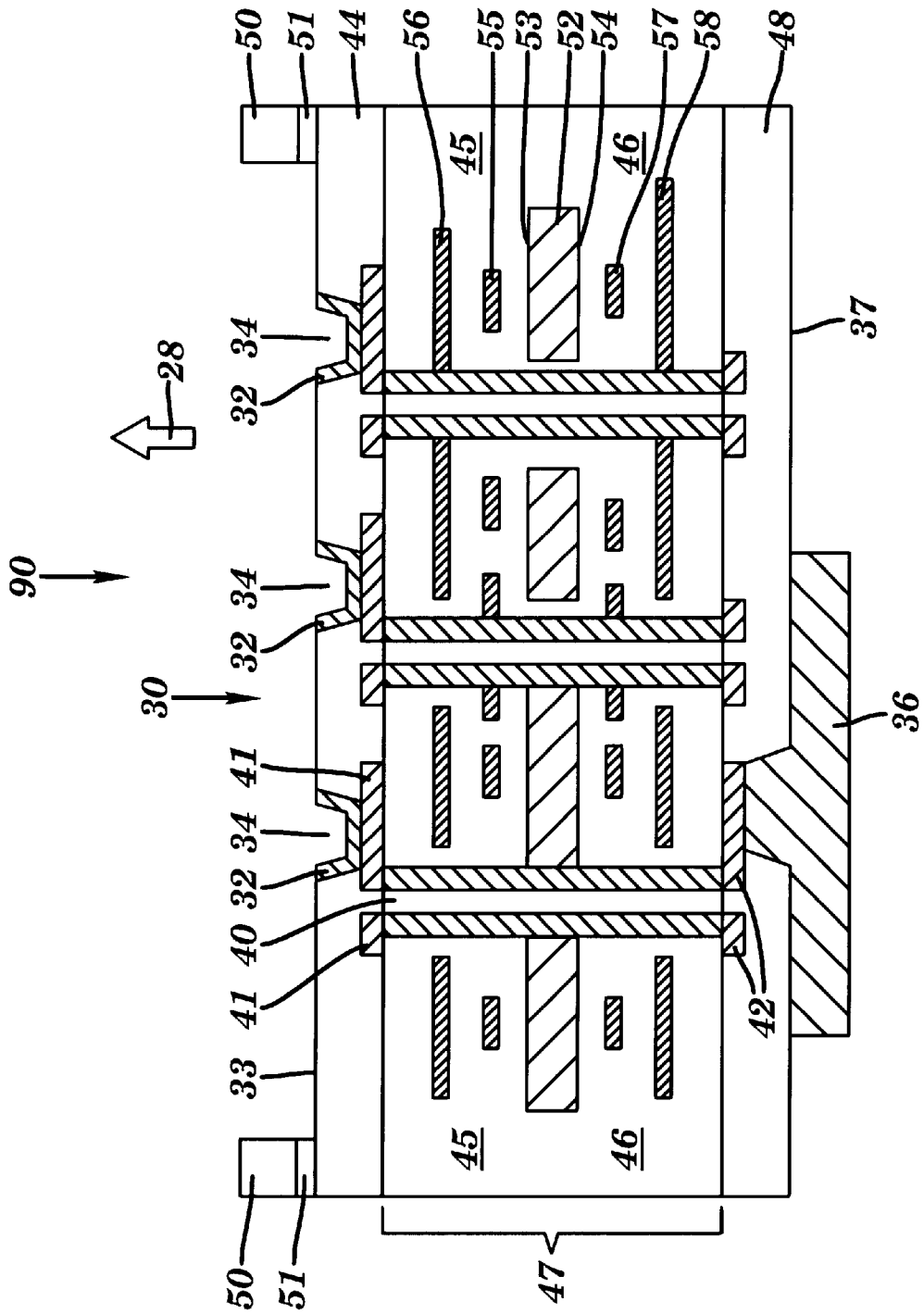
50
51
44
56
55
53
52
54
57
58
48
45
46
37
34
28
32
90
34
32
30
36
41
34
32
40
41
42
33
45
46
50
51
47

FIG. 3

FIG. 4

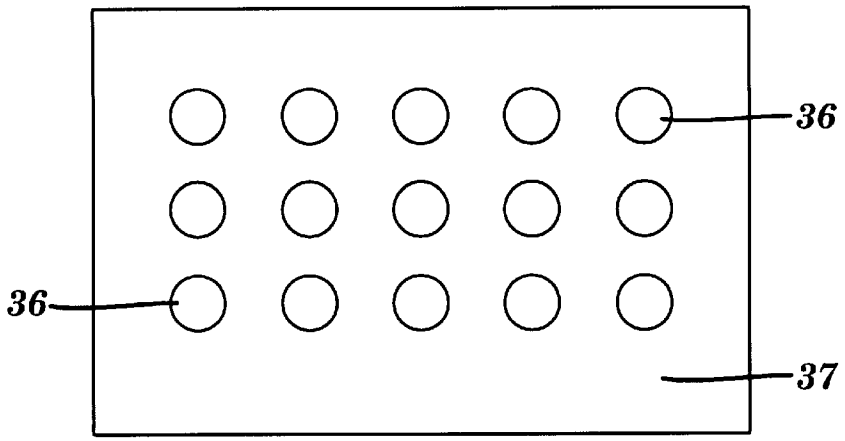

FIG. 5

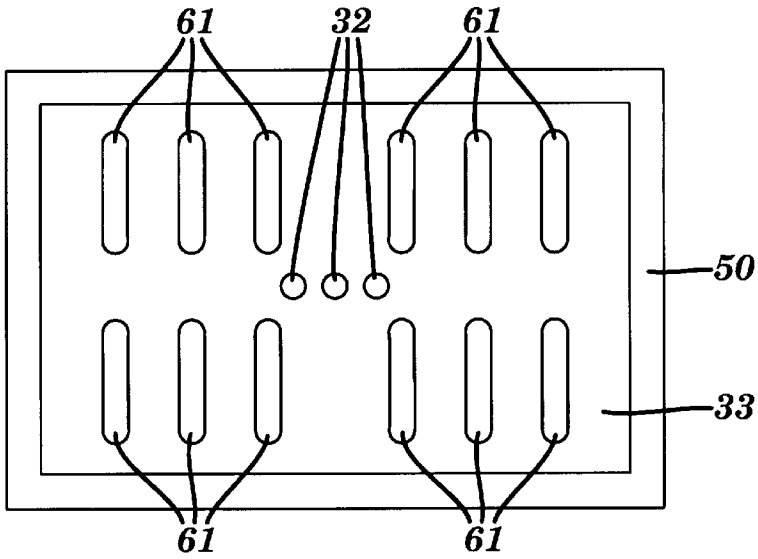

FIG. 6

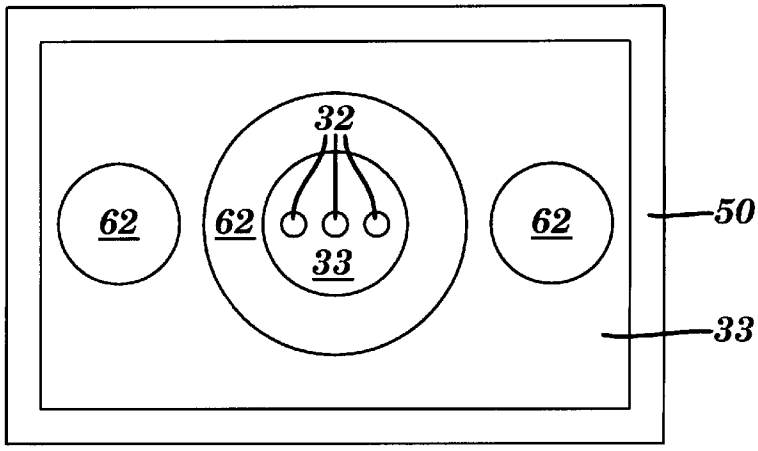

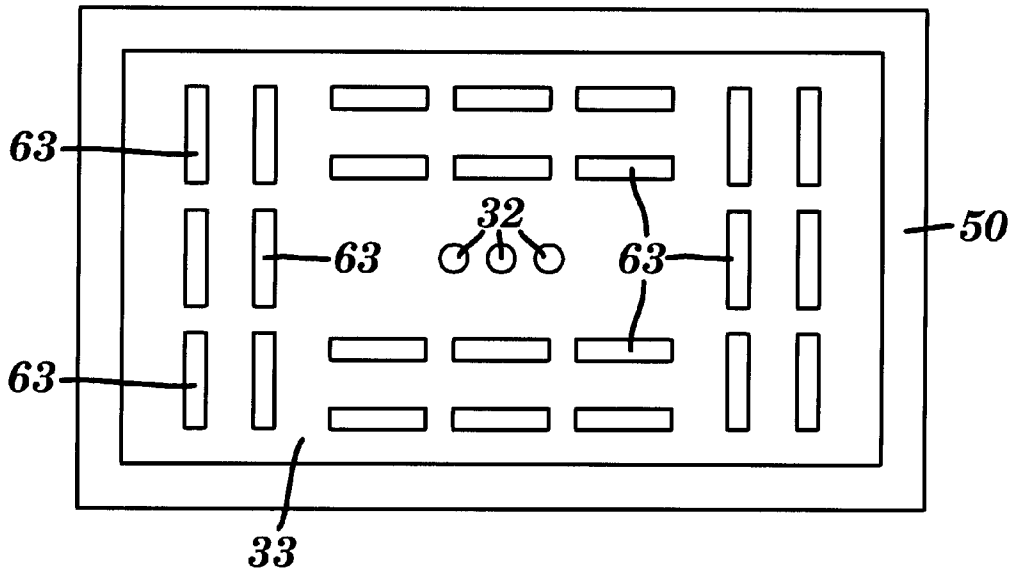

FIG. 7

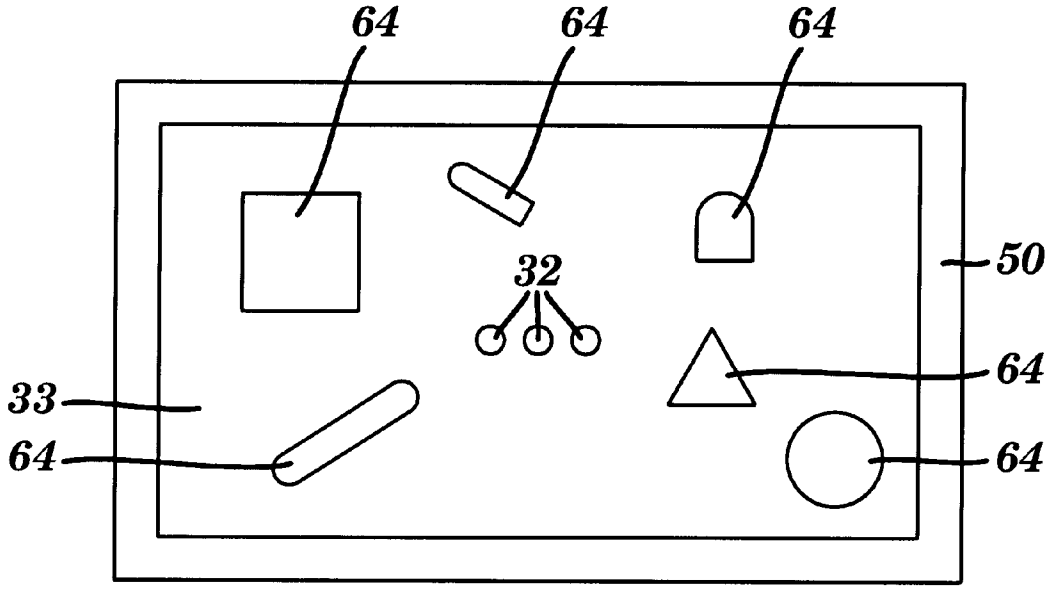

FIG. 8

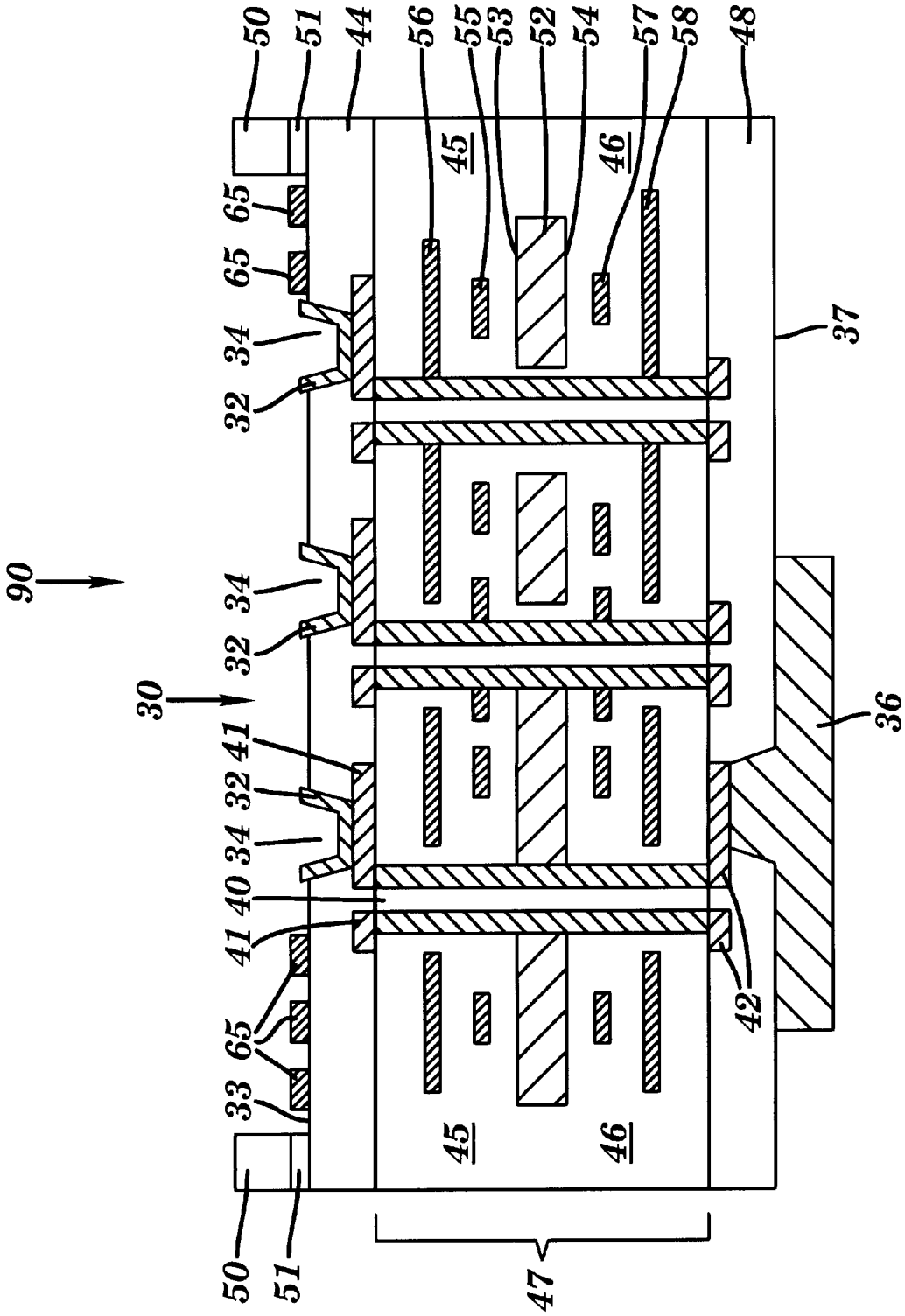
90
30
50
51
44
56
55
53
52
54
57
58
48
45
46
65
34
32
41
40
33
37
36
42
47

FIG. 9

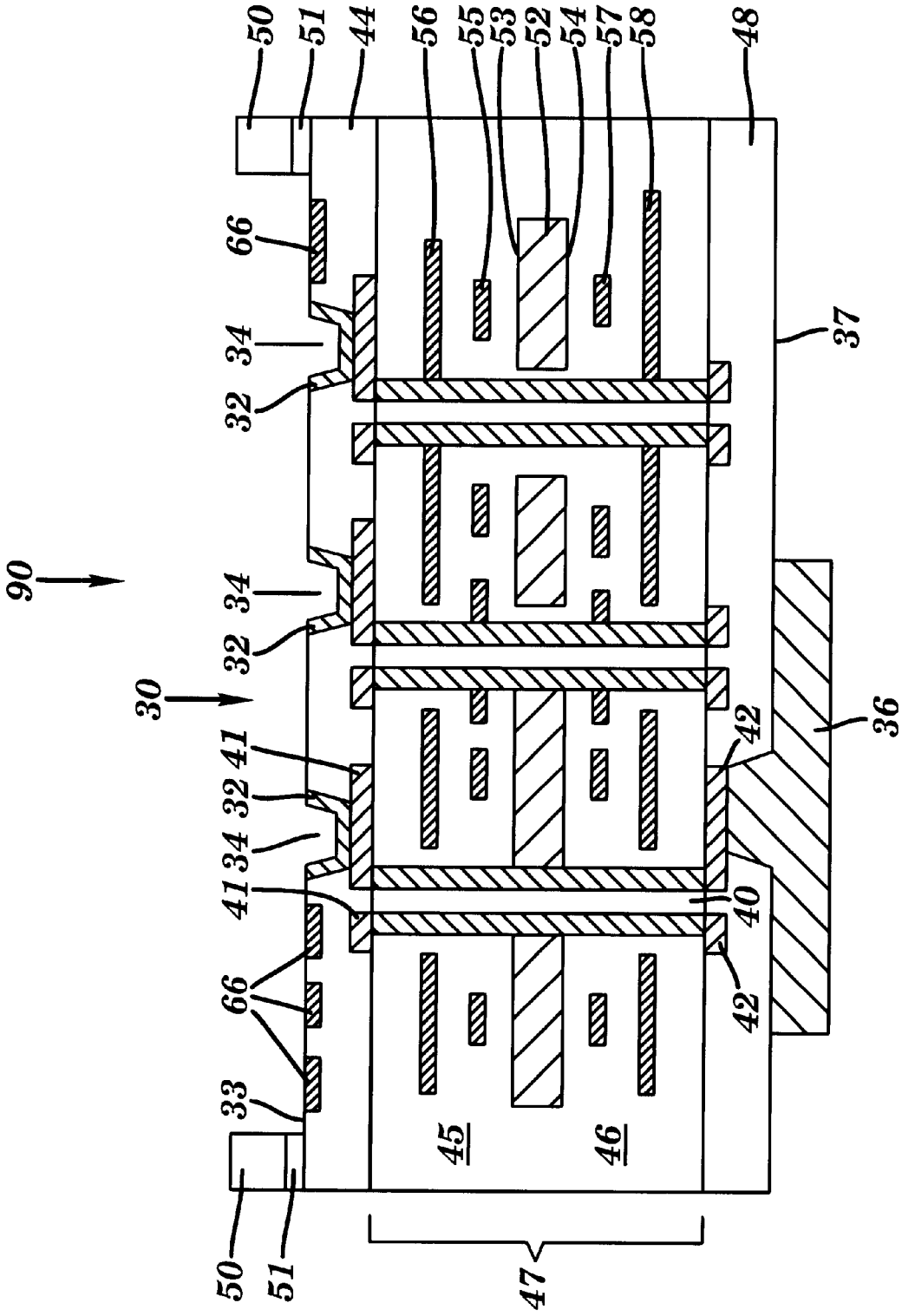
90
30
50
51
44
56
55
53
52
54
57
58
48
66
34
32
41
33
37
36
42
40
45
46
47

FIG. 10

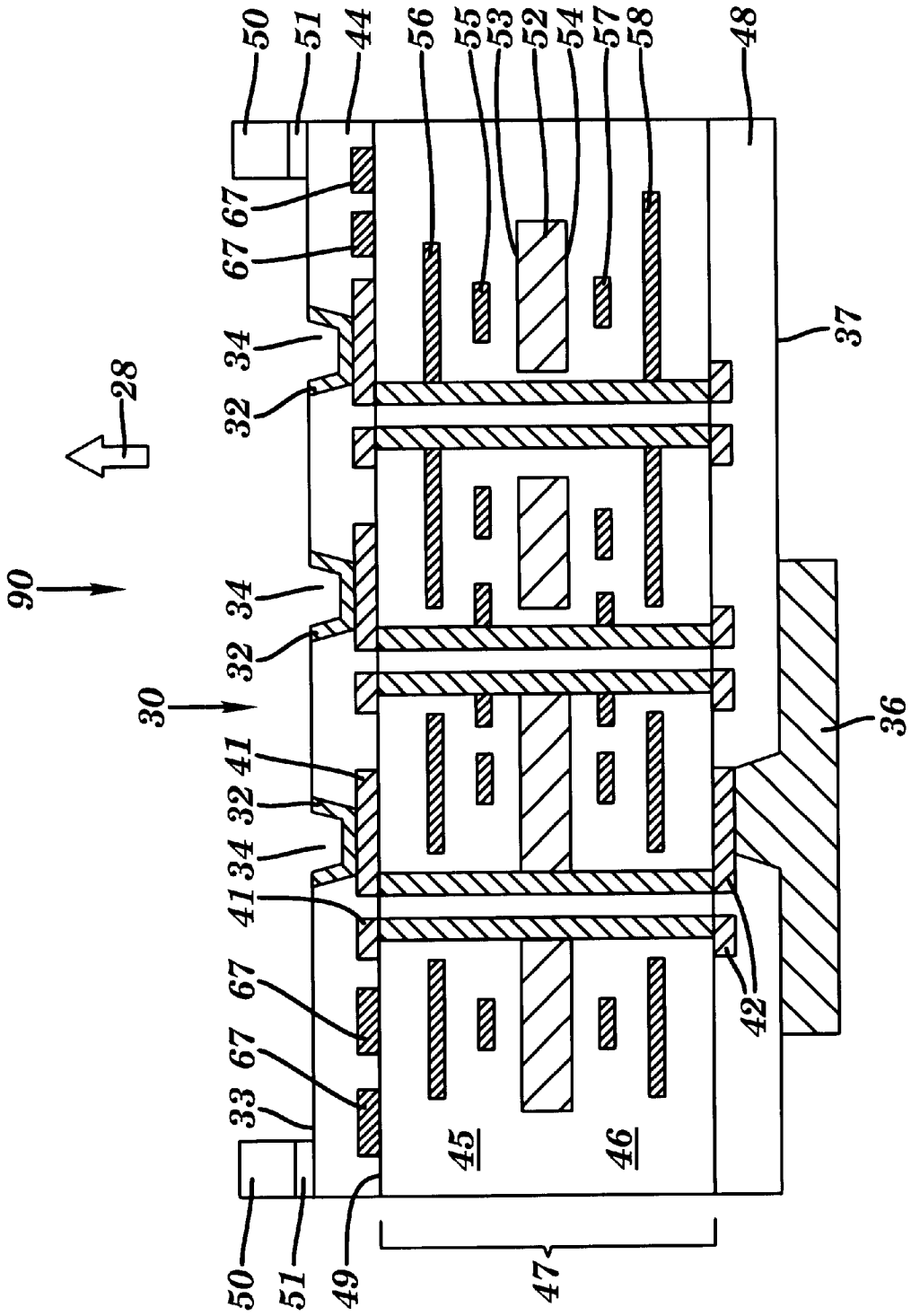
50
51
44
56
55
53
52
54
57
58
48
67
67
34
32
28
90
34
32
30
41
32
34
41
67
67
33
50
51
49
47
45
46
42
36
37

FIG. 11

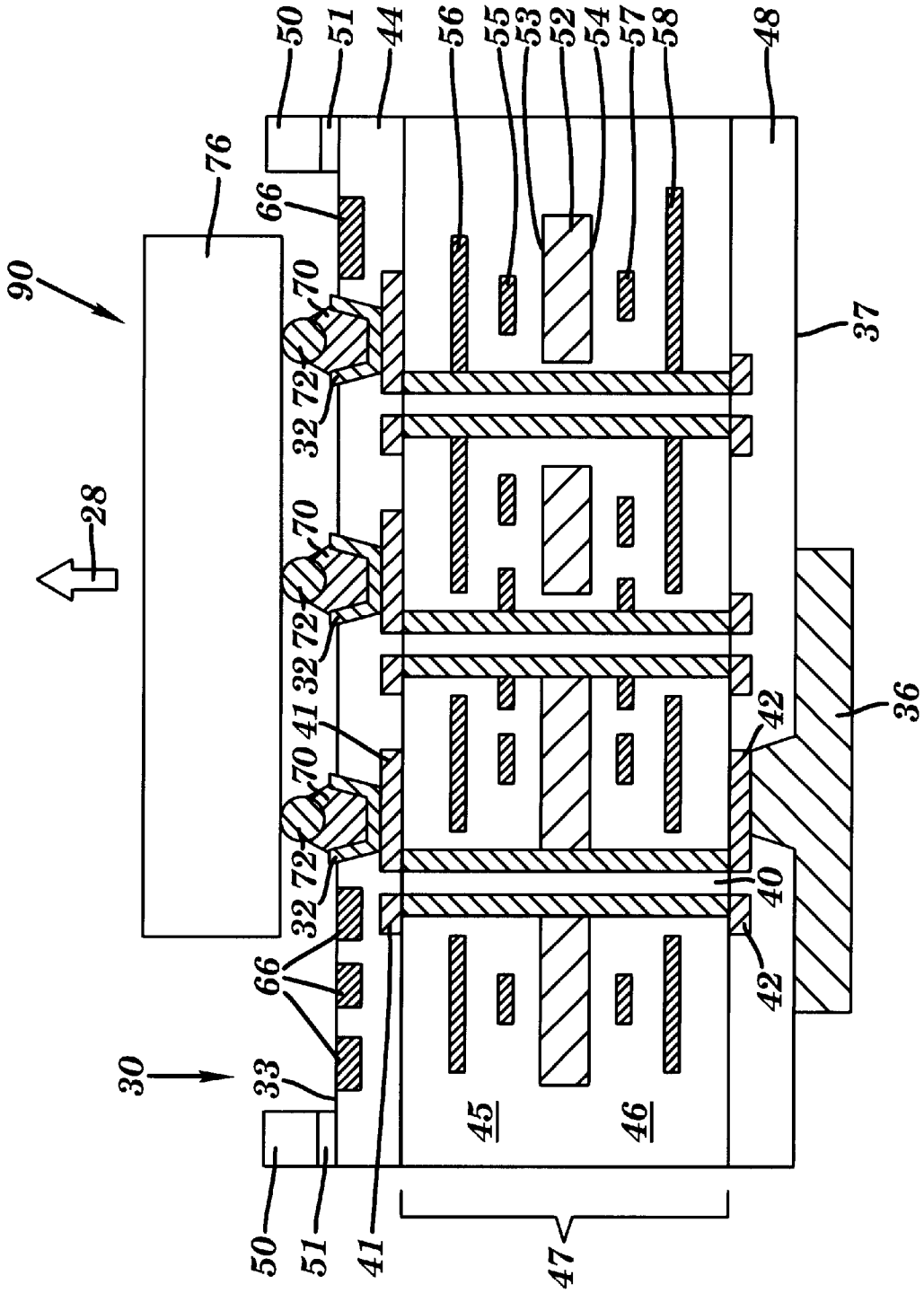
90
28
76
66
70
72
32
41
30
33
50
51
44
56
55
53
52
54
57
58
48
37
36
42
40
45
46
47

FIG. 12

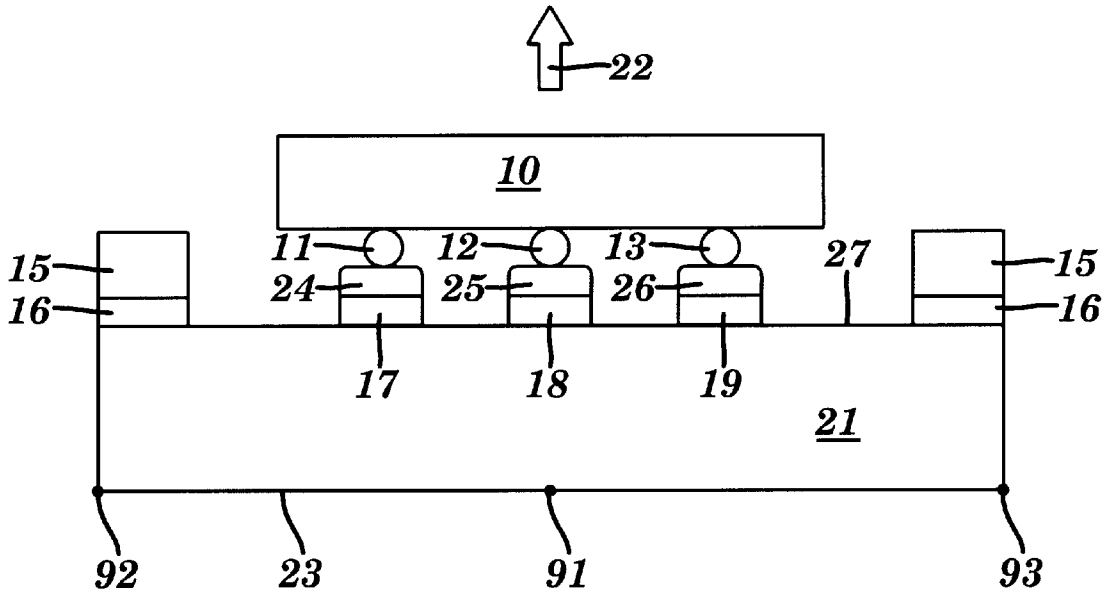

FIG. 13
RELATED ART

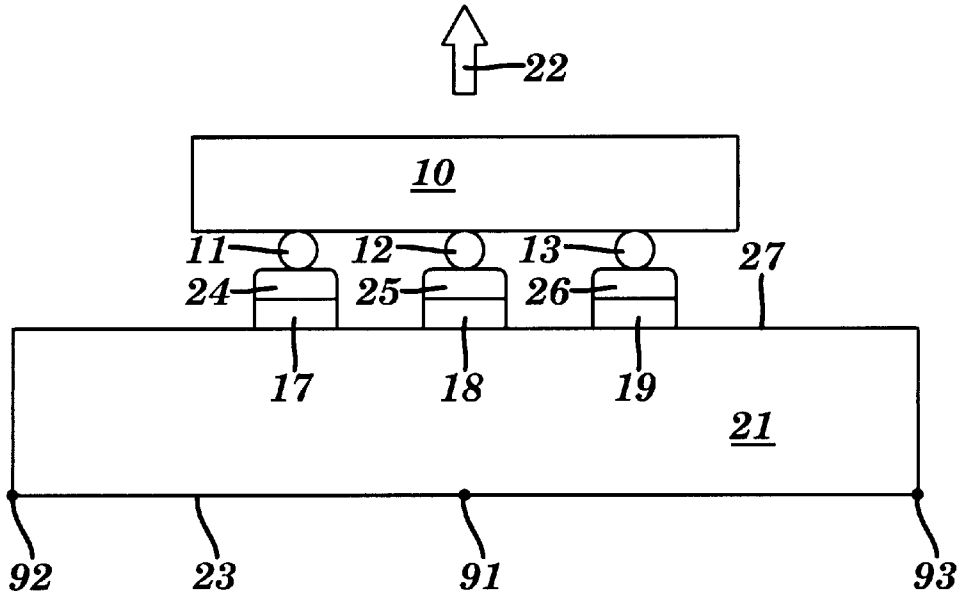

FIG. 15

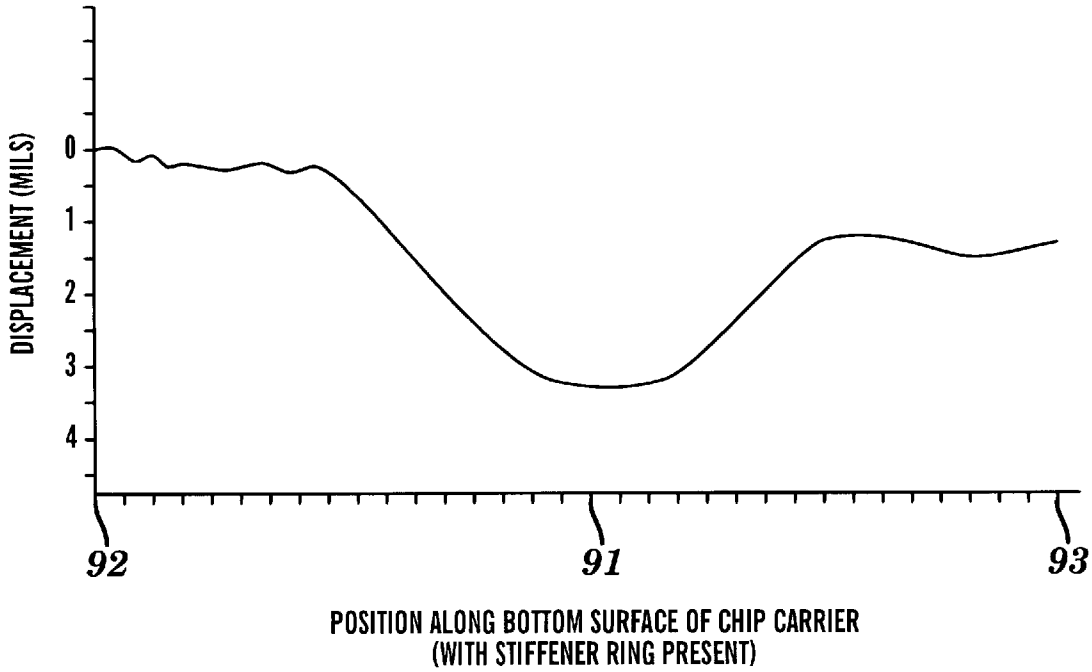
DISPLACEMENT (MILS)
0
1
2
3
4
92
91
93
POSITION ALONG BOTTOM SURFACE OF CHIP CARRIER
(WITH STIFFENER RING PRESENT)

FIG. 14

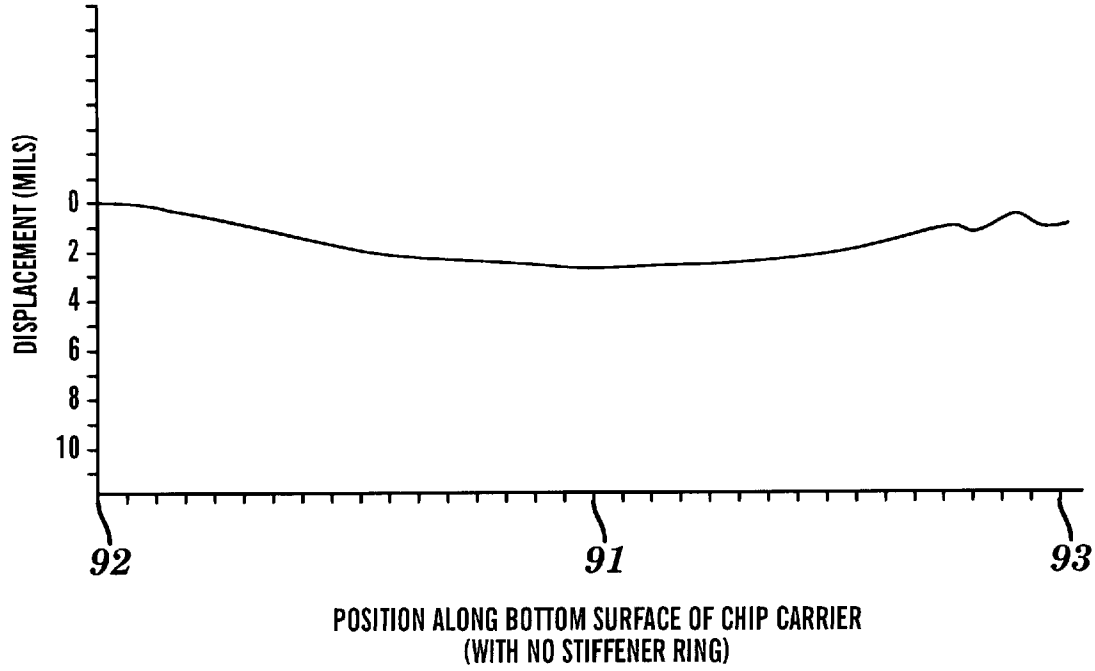
DISPLACEMENT (MILS)
0
2
4
6
8
10
92
91
93
POSITION ALONG BOTTOM SURFACE OF CHIP CARRIER
(WITH NO STIFFENER RING)

FIG. 16

REDUCTION OF CHIP CARRIER FLEXING DURING THERMAL CYCLING

The present patent application is a continuation-in-part of copending U.S. patent application Ser. No. 09/503,395, filed Feb. 14, 2000 and entitled "Surface Metal Balancing To Reduce Chip Carrier Flexing."

BACKGROUND OF THE INVENTION

1. Technical Field

The present invention relates to a method and structure for reducing chip carrier flexing during thermal cycling.

2. Related Art

A semiconductor chip may be mechanically and conductively coupled to a chip carrier by having conductive contacts on the chip (e.g., Controlled Collapse Chip Connection solder balls) solderably coupled to the top surface of the chip carrier. During processing steps that elevate the temperature of the chip carrier, such as during a reflow step for solderably joining the chip to the chip carrier, a spatial distribution of coefficient of thermal expansion (CTE) due to material inhomogeneities within the chip carrier may cause the chip carrier to bow (or flex) upward or downward and thus deviate from planarity. For example, there may be large copper pads on the bottom of the chip carrier to accommodate a ball grid array of solder balls for coupling the chip carrier to a circuit card, and smaller amounts of copper, such as in the form of copper circuitization and/or copper pads for joining a chip to the chip carrier on the top surface of the chip carrier. The spatial distribution of CTE, and consequent bowing or sagging of the chip carrier when the chip carrier is heated, is a result of copper imbalance between the top and bottom surfaces of the chip carrier combined with volumetric distribution within the chip carrier of materials having different magnitudes of CTE.

The preceding chip carrier flexing problem increases in severity if the chip carrier is made of compliant material, such as compliant organic material which cannot be easily handled (e.g., a material having an elastic modulus of less than about 300,000 psi). An organic chip carrier that is highly compliant may benefit from a rigid "stiffener ring" bonded to an outer perimeter of the top surface of the chip carrier in order to enhance the structural characteristics of the chip carrier. That is, the stiffener ring makes the chip carrier more mechanically stable and thus easier to handle. Unfortunately, the stiffener ring acts as a mechanical clamp on the outer perimeter of the chip carrier that constrains outer portions of the chip carrier from expanding, particularly when subjected to elevated temperature. In contrast, center portions of chip carrier at which chips are typically attached, are not constrained by the stiffener ring. Thus, expansion of the central portions, when heated, accentuates the chip carrier bowing by causing a distinct upward bulge in the central portion of the chip carrier top surface.

An adverse consequence of chip carrier bowing, particularly when a stiffener ring is used with a compliant organic chip carrier, is unreliable coupling of a chip to the chip carrier, as illustrated in FIGS. **1** and **2**. FIG. **1** shows a semiconductor chip **10** resting on an organic chip carrier **20** at ambient room temperature, wherein a top surface **14** of the chip carrier **20** is flat, and wherein solder balls **11**, **12**, and **13** on the semiconductor chip **10** are in conductive contact with solder bumps **24**, **25**, and **26** at the conductive pads **17**, **18**, and **19** on the top surface **14** of the chip carrier **20**, respectively. A stiffener ring **15** is bonded to the outer perimeter of the chip carrier **20** by an interfacing adhesive **16**. FIG. **2** shows the chip carrier **20** of FIG. **1** under temperature elevation, such as when solder from the solder bumps **24**, **25**, and **26** is reflowed around the solder balls **11**, **12**, and **13** in an attempt to conductively join the solder balls **11**, **12**, and **13** to the conductive pads **17**, **18**, and **19**, respectively. At the elevated temperature, the center the chip carrier **20** is bows (or bulges) upward in the direction **22**, such that the solder balls **11** and **13** are no longer in conductive contact with the conductive pads **17** and **19**, respectively. Thus, the chip carrier flexing impairs the ability to reliably join a chip to a chip carrier. The bowing B may exceed 2 to 3 mils during solder reflow.

A method and structure is needed for reducing or eliminating flexing of a compliant organic chip carrier in an elevated temperature environment, and particularly when solder is reflowed around solder balls of a semiconductor chip for joining the semiconductor chip to the chip carrier.

The related art does not teach or suggest how to reduce flexing of a stiff chip carrier during thermal cycling. As a result, a stiff chip carrier may experience flexing that leads to cracking during thermal cycling.

A method and structure is therefore needed for reducing chip carrier flexing during thermal cycling.

SUMMARY OF THE INVENTION

The present invention provides an electronic structure, comprising:

a chip carrier having an elastic modulus of at least about 3×10^5 psi, wherein there is no stiffener ring coupled to a peripheral portion of the chip carrier; and

a semiconductor chip coupled to a central portion of the chip carrier.

The present invention provides a method of forming an electronic structure, comprising:

providing a chip carrier having an elastic modulus of at least about 3×10^5 psi, wherein there is no stiffener ring coupled to a peripheral portion of the chip carrier; and

coupling a semiconductor chip to a central portion of the chip carrier.

The present invention improves an ability of a stiff chip carrier to accommodate stresses thermally induced in the chip carrier during thermal in order to reduce or eliminate flexing of the chip carrier during the thermal cycling.

BRIEF DESCRIPTION OF THE DRAWINGS

FIG. **1** depicts a front cross-sectional view of a semiconductor chip having solder balls resting on solder bumps of a chip carrier.

FIG. **2** depicts FIG. **1** after the substrate has been heated to reflow the solder bumps around the solder balls.

FIG. **3** depicts a front cross-sectional view of an organic substrate having first and second metal structures on top and bottom surfaces, respectively, of the organic substrate, in accordance with a embodiments of the present invention.

FIG. **4** depicts a bottom view of the organic substrate of FIG. **3**, showing BGA pads illustrating the second metal structure on a bottom surface of the substrate.

FIG. **5** depicts a top view of the organic substrate of FIG. **3**, showing the first metal structure with a first metal pattern coupled to a top surface of the substrate.

FIG. **6** depicts a top view of the organic substrate of FIG. **3**, showing the first metal structure with a second metal pattern coupled to a top surface of the substrate.

FIG. **7** depicts a top view of the organic substrate of FIG. **3**, showing the first metal structure with a third metal pattern coupled to a top surface of the substrate.

FIG. **8** depicts a top view of the organic substrate of FIG. **3**, showing the first metal structure with a fourth metal pattern coupled to a top surface of the substrate.

FIG. **9** depicts FIG. **3**, showing a metal pattern coupled to, and above, the top surface of the substrate.

FIG. **10** depicts FIG. **3**, showing a metal pattern coupled to, and below, the top surface of the substrate.

FIG. **11** depicts FIG. **3**, showing a metal pattern within an interior portion of the substrate.

FIG. **12** depicts FIG. **10**, after a semiconductor chip has been coupled to the substrate.

FIG. **13** depicts FIG. **1** with the chip carrier of FIG. **1** being replaced by a stiff chip carrier, and with the stiffener ring coupled to the stiff chip carrier, in accordance with the related art.

FIG. **14** depicts thermally induced displacement measurements along a bottom surface of the chip carrier of FIG. **13**.

FIG. **15** depicts FIG. **13** with the stiffener ring removed, in accordance with embodiments of the present invention.

FIG. **16** depicts thermally induced displacement measurements along a bottom surface of the chip carrier of FIG. **15**.

DETAILED DESCRIPTION OF THE INVENTION

The detailed description herein discusses and teaches: **1)** surface metal balancing to reduce or eliminate thermally induced chip carrier flexing; and **2)** stiff chip carriers without stiffener rings to reduce chip carrier flexing of stiff chip carriers during thermal cycling.

Surface Metal Balancing

FIG. **3** illustrates a front cross-sectional view of an electronic structure **90** comprising an organic substrate **30** that includes an organic material, a metal structure **32** on a top surface **33** of the organic substrate **30**, and a metal structure **36** on a bottom surface **37** of the organic substrate **30**, in accordance with embodiments of the present invention. The metal structure **32** may include a metal plating (e.g., such as a copper plating) on at least one plated blind via **34**, and any conductive circuitization (not shown) on the top surface **33**. The plating on the plated blind via **34** is intended to be conductively coupled to an electronic device, such as the semiconductor chip **76** shown infra in FIG. **12**. The metal structure **36** may include metal pads, such as ball grid array (BGA) pads (see, e.g., FIG. **4** for an illustration of BGA pads), and any conductive circuitization (not shown) on the bottom surface **37**. BGA pads are intended to be conductively coupled to an electronic assembly such as a circuit card. The metal structure **32** and the metal structure **36** may be conductively coupled by any internal conductive structure within the organic substrate **30**, such as a plated though hole (PTH) **40**, together with a metal pad **41** conductively interfacing the metal structure **32** with the PTH **40**, and a metal pad **42** conductively interfacing the metal structure **36** with the PTH **40**. Many other internal conductive structures are possible. For example, the metal structure **32** could each be conductively coupled to a first plated blind extending into an interior level of the organic substrate **30**, the metal structure **36** could be conductively coupled to into a second plated blind extending into the interior level, such that the first and second blind vias are coupled by interfacing conductive circuitization at the interior level.

FIG. **3** shows the organic substrate **30** as comprising four dielectric layers: dielectric layer **44** denoted as a top layer that is included within the top surface **33**, dielectric layer **48** denoted as a bottom layer that is included within the bottom surface **37**, and dielectric layers **45** and **46** within a region **47**, wherein the region **47** interfaces with dielectric layers **44** and **48**. The region **47** (which comprises dielectric layers **45** and **46** as stated supra) includes the organic dielectric material. Additionally, the region **47** includes a thermally conductive layer **52** with the dielectric layers **45** and **46** on opposing surfaces **53** and **54**, respectively, of the thermally conductive layer **52**. The dielectric layer **45** includes a signal plane **55** and a power plane **56**, wherein the signal plane **55** is positioned between the thermally conductive layer **52** and the power plane **56**. A power plane comprises a continuous sheet of conductive material (e.g., copper) having at least one through hole. A signal plane comprises a layer of shielded signal conductors. The dielectric layer **46** includes a signal plane **57** and a power plane **58**, wherein the signal plane **57** is positioned between the thermally conductive layer **52** and the power plane **58**.

The dielectric layers **44** and **48** each have a thickness preferably between about **40** microns and about 60 microns. The dielectric layers **44** and **48** provide a structural stability to the substrate **30**, inasmuch as the organic material in the dielectric layers **45** and **46** is soft compliant and thus may be difficult to handle in an absence of the more rigid dielectric layers **44** and **48**. Additionally, the dielectric layers **44** and **48** each preferably include a dielectric material having a CTE that by no more than a factor of about 3 as the temperature increases from just below to just above the glass transition temperature (T_g) of the dielectric material of the dielectric layers **44** and **48**. In contrast, other materials that could be used in the dielectric layers **44** and **48** generally have a CTE that increases by an order of magnitude or more as the temperature in increased through a T_g transition. A preferred dielectric material for the dielectric layers **44** and **48** includes a resin having an allylated polyphenylene ether (APPE) having T_g of about 210° C. and characterized by a CTE increase of a factor of about 2.5 as the temperature increases from just below to just above T_g. A particularly useful APPE for the dielectric layers **44** and **48** is an APPE resin coated on a copper foil, made by the Asahi Chemical Company of Japan and identified as Asahi product number PC5103.

Notwithstanding the dielectric layers **44** and **48**, the substrate **30** remains somewhat compliant, and its structural stability may be further enhanced with a stiffener ring **50** bonded to an outer portion, such as an outer perimeter portion as shown in FIG. **3**, of the top surface **33** of the organic substrate **30** by use of an interfacing adhesive **51**. In order to avoid or minimize differential thermal expansion between the stiffener ring **50** and the organic substrate **30**, the CTE of the stiffener ring **50** should preferably not differ by more than about 10% from the spatially average CTE of a composite structure of: the organic substrate **30**, the dielectric layer **44**, and the dielectric layer **48**. The thermally conductive layer **52** preferably has a coefficient of thermal expansion (CTE) between about 4 ppm/° C. and about 8 ppm/° C., such that a spatially averaged CTE of said composite structure is between about 10 ppm/° C. and about 12 ppm/° C. If the organic substrate **30** has a spatially averaged CTE between about 10 ppm/° C. and about 12 ppm/° C., a suitable material for the stiffener ring **50** is, inter alia, 430 series stainless steel having a CTE of 10.0 ppm/° C.

The dielectric layers **45** and **46** may be laminated to the thermally conductive layer **52** by, inter alia, placing the layers **45** and **46** on the opposing surfaces **53** and **54** of the thermally conductive layer **52**, to form a sandwich with the

thermally conductive layer **52** as a middle layer of the sandwich. A pressure is applied to the sandwich, such as by using a lamination press. The pressure is between about 1000 psi and about 2000 psi at a temperature between about 305° C. and about 400° C. The PTH **40**, which passes through the region **47**, may be formed by, inter alia, laser or mechanical drilling to form a via. A thin (e.g., 1 to 3 microns) metal (e.g., copper) is electrolessly plated on the via wall, using a seeding material such as palladium to promote electroless adhesion of the metal to the via wall. Then a thicker (e.g., 1 mil) layer of the metal (e.g., copper) is electroplated over the electroless coat of the metal. Note that other metal plating techniques, known to one of ordinary skill in the art, may be used.

The dielectric layers **44** and **48** may be laminated on the dielectric layers **45** and **46**, respectively, by any method known to one of ordinary skill in the art, in accordance with the particular dielectric material used in the dielectric layers **44** and **48**. For example, the dielectric layers **44** and **48**, if including the allylated polyphenylene ether (APPE) coated on a copper foil such as the Asahi resin PC5103, may be formed on the dielectric layers **45** and **46**, respectively, by pressurization in a range of about 1000 psi to about 2000 psi at an elevated temperature between about 180° C. and about 210° C. for a time of at least about 90 minutes. The pressurization and elevated temperatures causes the APPE resin to flow and become cured, resulting in lamination of the the dielectric layers **44** and **48** to the dielectric layers **45** and **46**, respectively. After the pressurization, the copper foils are removed in any manner known to one of ordinary skill in the art, such as by etching.

The plated blind via **34** may be formed by any method known to one of ordinary skill in the art, such as by laser drilling into the dielectric layer **44** down to the metal pad **41** to form a via, followed by electroless plating of metal (e.g., copper) on seeded surfaces (e.g., palladium seeded surfaces) of the via to form an electroless layer of the metal. After the electroless plating, the metal (e.g., copper) is electroplated over the electroless layer to form the plated blind via **34**.

For definitional purposes, let C_1 and A_1 denote the CTE and surface area of the metal structure **32**, respectively. Let C_2 and A_2 denote the CTE and surface area of the metal structure **36**, respectively. The values of C_1, A_1, C_2, and A_2 are at ambient room temperature. It is assumed that C_2A_2 exceeds C_1A_1. Under the preceding assumption and upon a heating of the substrate **30**, the top surface **33** will bow (or bulge) upward in a direction **28**, due to a thermal expansion imbalance between metalizations of the metal structure **32** and the metal structure **36** in consideration of the stiffener ring **50**, as explained supra in the "Related Arts" section.

The organic structure **30** in FIG. **3** is illustrative and many other alternative structures are within the scope of the present invention. For example, the structure **30** may have any number of dielectric layers, including as few as one dielectric layer. As another example, any of the thermally conductive layer **52**, the signal planes **55** and **57**, and the power planes **56** and **58** may or may not be present. It should be further noted that words such as "top," "bottom," "up," and "down," do not imply a directional orientation with respect to a radial direction from a center of the Earth, but rather serve to orient the reader in viewing the Figures in this patent application.

FIG. **4** shows a bottom view of the organic substrate **30** of FIG. **3**, showing BGA pads illustrating the second metal structure **36** on the bottom surface **37** of the organic substrate **30**. Each of the 15 BGA pads of the second metal structure **36** in FIG. **4** is intended to contact a BGA solder ball for coupling the organic substrate **30** to a circuit card. Note that the BGA pad pattern in FIG. **4** is an example of the second metal structure **36**. Any geometric configuration of metal on the bottom surface **37** of the organic substrate **30** may represent the second metal structure **36**.

FIG. **5** illustrates a top view of the organic substrate **30** of FIG. **3**, along with the stiffener ring **50**, showing a metal pattern **61** coupled to unoccupied space at or adjacent to (see discussion following description of FIGS. **9–11** for a definition of "adjacent to") the top surface **33**, in order to compensate for an imbalance between C_1A_1 (of the top surface **33**) and C_2A_2 (of the bottom surface **37**). In particular, the metal pattern **61** has a CTE and surface area of C_3 and A_3, respectively, such that $(C_2A_2-C_1A_1-C_3A_3)$ is less than $(C_2A_2-C_1A_1)$ in magnitude. The values of C_3 and A_3 are at ambient room temperature. Thus, the metal pattern **61** compensates partially or fully for a thermal imbalance between C_1A_1 and C_2A_2. C_2A_2 and $(C_3A_3+C_1A_1)$ should differ in magnitude by no more than about 20%, and preferably by no more than about 10%. Note that if C_1, C_2, and C_3 are about equal, then the preceding condition takes the form of having A_2 and (A_3+A_1) differ in magnitude by no more than about 20%, and preferably by no more than about 10%. If the first metal structure **32**, the second metal structure **36**, and the metal pattern **61** are each comprised of the same metal, then C_1, C_2, and C_3 are about equal. Nonetheless, the first metal structure **32**, the second metal structure **36**, and the metal pattern **61** may include different metals, and C_1, C_2, and C_3 may accordingly differ. Copper, which has a CTE of about 17 ppm/° C., is a preferred metal for the metal pattern **61**. Other metal suitable for the metal pattern **61** include nickel, which has a CTE of about 17 or 18 ppm/° C., and aluminum, which has a CTE of about 20 ppm/° C.

The thicknesses of the first metal structure **32**, the second metal structure **36**, and the metal pattern **61** are preferably comparable, and deviations in thickness within about 10% will not significantly impact the effectiveness of the thermal balancing scheme described supra. If said thickness deviations exceed about 10%, then the surface exposed A_3 of the metal pattern **61** may be adjusted to deviate from the preceding formula of balancing $(A_3C_3+A_1C_1)$ against A_2C_2, to whatever extent is necessary for achieving a desired level of thermal balancing. Said adjusting of A_3 may be accomplished by testing, and without undue experimentation, by recognizing that a smaller thickness in the metal pattern **61** allows more thermal expansion length of the metal pattern **61** parallel to the top surface **33** of the organic substrate **30** than does a larger thickness, for a given surface area A_3. Thus, a thickness in the metal pattern **61** that is too large, which inhibits expansion parallel to the top surface **33**, may be compensated for by increasing the surface area A_3.

The metal pattern **61** may be coupled to any unoccupied space at the top surface **33**. The metal pattern **61** is insulatively isolated from any other conductive structure on or within the substrate **30**. Thus, the metal pattern **61** has no electrical function, and serves the particularized function of balancing thermal expansion of metalization on the top and bottom surfaces **33** and **37**, respectively, so as to reduce or eliminate flexing of the substrate **30** when subjected to an elevated temperature.

The effectiveness of the metal pattern **61** for thermal balancing purposes is insensitive to a spatial distribution of the metal pattern **61** on the top surface **33**, provided that a combined spatial distribution of the metal pattern **61** and the metal structure **32** on the top surface **33** is not highly skewed

in comparison with a spatial distribution of the metal structure **36** on the bottom surface **37**.

The geometry of the metal pattern **61** is arbitrary, and metal of any geometry may be coupled to the top surface **33** to effectuate thermal balancing, provided that such metal is insulatively isolated from any other conductive structure on or within the substrate **30**. Other examples of metal patterns that may be coupled to unoccupied space at or adjacent to (see discussion following description of FIGS. **9–11** for a definition of "adjacent to") the top surface **33** are shown in FIGS. **6**, **7**, and **8**, namely metal patterns **62**, **63**, and **64**, respectively. FIG. **6** shows the metal pattern **62** having a circular geometric arrangement. FIG. **7** shows the metal pattern **63** having a two-dimensional rectangular geometric arrangement. FIG. **8** shows the metal pattern **64** having a random geometric arrangement as to both shape and location.

An insulatively metal pattern (e.g., any of the metal patterns **61**, **62**, **63**, **64** in FIG. **5–8**, respectively) that is coupled to the top surface **33** of the organic substrate **30** for thermal balancing purposes, may be formed either above or below the top surface **33** as shown in FIGS. **9** and **10**, respectively.

FIG. **9** illustrates FIG. **3**, showing a metal pattern **65** above, and coupled to, the top surface **33** of the organic substrate **30**. The metal pattern **65** may be formed by any method known to one of ordinary skill in the art. If metal such as copper is utilized for the metal pattern **61**, for example, then the metal pattern **65** may be formed by: bonding a preformed sheet of the metal (e.g., copper) on the top surface **33**, reducing the thickness of the preformed sheet of the metal to the desired thickness, applying photoresist and photolithographically exposing portions of the metal sheet to radiation (e.g., ultraviolet radiation), chemically developing away unexposed photoresist and the metal underneath the unexposed photoresist, and stripping away the exposed photoresist, such that the metal pattern **65** has been generated and is insulatively isolated from any other conductive structure on or within the substrate **30**. If both the metal structure **32** and the metal pattern **65** each include the same metal (e.g., copper), then the metal pattern **65** may be formed concurrent with, and by the same process as, formation of circuitization associated with the metal structure **32** on the top surface **33**, which would enable the metal pattern **65** to be formed at little or no extra cost inasmuch as the circuitization associated with the metal structure **32** would be formed regardless of whether the metal pattern **65** is also formed.

If nickel is utilized for the metal pattern **61**, then the metal pattern **65** may be formed by electroplating or sputter deposition. The thickness of the metal pattern **61** may be reduced as needed by any method known to one of ordinary skill in the art.

If aluminum is utilized for the metal pattern **61**, then the metal pattern **65** may be formed by the same method described supra for copper, except that the thickness of the preformed sheet of aluminum cannot be easily reduced. Thus, the preformed sheet of aluminum should have a thickness that is close to desired thickness of the metal pattern **61**.

FIG. **10** illustrates FIG. **3**, showing a metal pattern **66** below, and coupled to, the top surface **33** of the organic substrate **30**. The metal pattern **66** may be formed by any method known to one of ordinary skill in the art, such as by laser-drilling isolated cavities (i.e., blind vias) in the dielectric layer **44**, and filling the cavities with the metal (of the intended metal pattern **66**) by electroless plating on seeded surfaces (e.g., palladium seeded surfaces) of the cavities, followed by electroplating the metal to fill the cavities to the level of the top surface **33**. It should be noted that the metal pattern **66** could be formed concurrent with, and by the same process as, formation of plated blind vias **34** described supra.

FIG. **11** illustrates FIG. **3**, showing a metal pattern **67** coupled to a top surface **49** of the dielectric layer **45**. The metal pattern **67** may be formed by any method known to one of ordinary skill in the art, such as by the same example method that was described for forming the metal pattern **65** in conjunction with FIG. **9**. It should be noted that the metal pattern **67** could be formed concurrent with, and by the same process as, formation of the metal pad **41**.

FIGS. **9–11** collectively illustrate that a metal pattern of the present invention (e.g., the metal pattern **65**, **66**, or **67** of FIG. **9**, **10**, or **11**, respectively) should be positioned "adjacent to" the top surface **33** of the organic substrate **30**, wherein "adjacent to" includes being coupled to (e.g., FIGS. **9–10**) or being proximate to (e.g., FIG. **11**). "Proximate to" means being located at a distance from the top surface **33** than does not exceed the thickness of the dielectric layer **44**. As stated supra, the thickness of the dielectric layer **44** is preferably between about 40 microns and about 60 microns.

FIG. **12** illustrates FIG. **10** after a semiconductor chip **76** has been coupled to the organic substrate **30** by any solderably coupling process known to one of ordinary skill in the art. For example, the plated blind vias **34** (see FIG. **10**) may be filled with a solder **70** shown in FIG. **12**, and conductive contacts **72** of the semiconductor chip **76** are placed in contact with the solder **70**. The solder **70** is thus conductively coupled to the metal structure **32**. The solder **70** is then reflowed at a temperature above the melting temperature of the solder **70**, and below the melting point of the conductive contacts **72**, such that the reflowed solder **70** conductively abuts all conductive contacts **72**, and adhesively and conductively couples with all conductive contacts **72** as the reflowed solder **70** cools. Thus at ambient room temperature, the semiconductor chip **76** is conductively coupled to the metal structure **32** at all conductive contacts **72** of the semiconductor chip **76**.

In a preferred configuration, the conductive contacts **72** are Controlled ° Collapse Chip Connection (C**4**) solder balls comprising solder material having a composition of about 97% lead and about 3% tin with a melting temperature of about 310° C. In the preferred configuration, the solder **70** is a low-melt lead-tin solder with a melting temperature below about 230° C. and at least the melting point of 183° C. of the eutectic composition of about 63% lead and about 37% tin. The solder **70** may have any of various geometric shapes known to those of ordinary skill in the art, such as solder balls and solder columns.

If the solder **70** were reflowed, and if the metal pattern **66** were absent, then a thermal expansion mismatch (i.e., $C_2A_2>C_1A_1$) between the solder structure **36** on the bottom surface **37** and solder structure **32** on the top surface **33** would cause the top surface **33** to bow or bulge upward in the direction **28**. The present invention reduces or eliminates the thermal mismatch by adding the metal pattern **66** to satisfy the condition that $(C_2A_2-C_1A_1-C_3A_3)$ is less than $(C_2A_2-C_1A_1)$ in magnitude. C_2A_2 and $(C_3A_3+C_1A_1)$ should differ in magnitude by no more than about 20%, and preferably by no more than about 10%. Within the aforementioned 20% magnitude differential between $(C_3A_3+C_1A_1)$ and C_2A_2, and at a reflow temperature between about

183° C. and about 310° C., the present invention is capable of constraining bowing of the substrate **30** to within about 1 mil, and reducing the upward bowing by a factor of at least 2 in comparison with the bowing that would have occurred had the metal pattern **66** not been included (see FIG. **2** and accompanying discussion for a definition of the bowing B). Within the preferred 10% magnitude differential between $(C_3A_3+C_1A_1)$ and C_2A_2, and at a reflow temperature between about 183° C. and about 310° C., the present invention is capable of constraining bowing of the substrate **30** to within about ½ mil.

The semiconductor chip **76** in FIG. **12** is generally representative of an electronic device having a plurality of conductive contacts such as the conductive contacts **72**. Any such electronic device that could be solderably coupled to the substrate **30** may substitute for the semiconductor chip **76** in FIG. **12**.

The metal pattern **66** is electrically insulated from any other conductive structure on or within the substrate **30** and thus does not participate in any electrical conduction functionality of the substrate **30**. While the metal pattern **66** is below and coupled to the top surface **33**, the metal pattern **66** could be replaced by the metal pattern **65** depicted in FIG. **9** as above and coupled to the top surface **33**. Similarly, the metal pattern **66** could be replaced by the metal pattern **67** depicted in FIG. **11**. Thus, the semiconductor chip **76** could be coupled to the organic substrate **30** in the configurations of FIGS. **9** and **11** in the same manner as the semiconductor chip **76** could be coupled to the configuration of FIG. **10**. Additionally, the metal pattern **66** could have any geometrical shape, such as the geometrical shape of any of the metal patterns **61–64** shown in FIGS. **5–8**, respectively.

Stiff Chip Carriers

FIG. **13** illustrates FIG. **1** with the chip carrier **20** of FIG. **1** being replaced by a stiff chip carrier **21**, and with the stiffener ring **15** coupled to the stiff chip carrier **21**, in accordance with the related art. A stiff chip carrier is defined herein as a chip carrier having an elastic modulus (also called "flexural modulus") of at least about 3×10^5 psi. A stiff chip carrier may include, inter alia, one or more epoxy based materials. A stiff chip carrier may include, inter alia, such materials as bismalimide-triazine (BT)-Epoxy/Glass, FR-4 (a common epoxy based dielectric material), a cyanate ester resin, and cyanate ester-epoxy-ePTFE (an expanded teflon material). The stiff chip carrier **21** is limited by its stiffness, or lack of compliancy, to respond to thermally induced strains and is thus at risk for suffering mechanical damage, such as cracking, during thermal cycling as well as during other thermal transients. In FIG. **13**, the semiconductor chip **10** is coupled to a central portion of the chip carrier **21**, and the stiffener ring **15** is coupled to a peripheral portion of the chip carrier **21**. The central portion of the chip carrier **21** is defined as a portion (based on volume or, equivalently, on surface area) of the chip carrier **21** that includes the chip **10** as well as any other semiconductor chips. The peripheral portion of the chip carrier **21** is defined as a portion (based on volume or, equivalently, on surface area) of the chip carrier **21** that does not includes the chip **10** (and any other chips). The peripheral portion of the chip carrier **21** typically occupies about 70% to about 90% of a surface area **27** of the chip carrier **21**. As will be explained infra, the stiffener ring **15** is a key factor in the aforementioned thermally induced strains during thermal cycling.

The related art is not aware of this difficulty with the stiffener ring **15**. For example, U.S. Pat. No. 6,027,590 (Sylvester et al. February 2000), hereby incorporated by reference, teaches a chip carrier configuration that includes the aforementioned elements (chip carrier, chip, stiffener ring) of FIG. **13**. See FIG. **2** of Sylvester showing a chip **18** coupled to a central portion of a chip carrier **12**, and a stiffener ring **22** coupled to a peripheral portion of the chip carrier **12**. See also FIG. **18** of Sylvester showing a chip **124** coupled to a central portion of a chip carrier **126**, and a stiffener ring **130** coupled to a peripheral portion of the chip carrier **126**. The. chip carrier **12** in Sylvester is stiff, since an elastic modulus of the chip carrier **12** is in a range of 19.4×10^9 pascals to 26×10^9 pascals, which converts to the range of 28.1×10^5 psi to 37.7×10^5 psi. See Sylvester, col. 12, lines 45–51. The chip carrier **12** in Sylvester includes the materials of bismalimide-triazine (BT)-Epoxy/Glass and cyanate ester-epoxy-ePTFE. See Sylvester, col. 11, lines 37–38. Sylvester identifies an elastic modulus of relevant prior art chip carriers as being in a range of 6.5×10^9 pascals to 10.3×10^9 pascals, which converts to the range of 9.42×10^5 psi to 14.9×10^5 psi. See Sylvester, col. 12, lines 45–51. Thus, the relevant chip carriers in the prior art are stiff. According to Sylvester, the purpose of the stiffener ring, which "essentially enclos[es] the chip within the [stiffener] ring's center," is to "stiffen the chip and substrate combination." See Sylvester, col. 3, lines 62–67. Additionally in relation Sylvester's invention the "constraining ring **22** stiffens the package **12** to permit easier handling of the package prior to and after chip attachment . . . " See Sylvester, col. 9, lines 18–20. In summary, the related art considers the stiffener ring as serving to further stiffen the already-stiff chip carrier laminate. The Sylvester patent, which issued in February 2000, reflects the state of the art as of February 2000 and earlier.

The related art views the stiffener ring as beneficial for reducing chip carrier flexing at operating temperatures. For example, Sylvester states that "[a] further embodiment of this feature of the invention provides for the insertion of a stiffener in the die area of the substrate to prevent that portion of the substrate from bending relative to the chip mounted directly over that portion of the substrate, through the range of device operating temperatures. So mounted, the stiffener generally overcomes the undesirable substrate warping in the chip die area." See Sylvester, col. 8, lines 4–11. The related art does not appreciate that the stiffener ring significantly increases flexing of the central portion of the chip carrier at a low temperature (e.g. 0° C. to −40° C.) due to a mismatch in a coefficient of thermal expansion (CTE) between the chip and the chip carrier. The chip has a CTE typically in a range of about 2.6 to about 4.1 ppm/° C. The stiff chip carrier has a CTE typically in a range of about 9 ppm/° C. to about 30 ppm/° C. Sylvester's chip carrier has a CTE between 21.4 and 23.0 ppm/° C. See Sylvester, col. 12, lines 45–51. With the stiffener ring in place, a portion of the chip carrier proximate to the stiffener ring (therefore, within the peripheral portion of the chip carrier) cannot flex, or is severely limited in being able to flex, in response to the thermal stress (and consequent strain) induced by the CTE mismatch. Accordingly, the central portion of the chip carrier must accommodate nearly all of the thermal strain induced by the CTE mismatch. Since the chip carrier is very stiff, the central portion of the chip carrier may lack sufficient pliability needed to accommodate the induced thermal stain and is therefore vulnerable to cracking at low temperature. This low temperature effect is important for at least two reasons. A first reason is that thermal cycling for testing purposes may, and typically does, include testing at low temperatures below 0° C. and lower temperatures of the

order of −40° C. or less. A second reason is some semiconductor devices normally operate at low temperatures. For example, computer servers are typically cooled below 0° C. (and as low as −15° C.) in order to protect against the damaging effects of substantial heat generation in a computer server electronic environment.

Tests conducted by the inventors of the present invention demonstrate the aforementioned difficulty relating to thermally induced flexing of the chip carrier due to the CTE mismatch. In particular, the tests illustrate the difference in thermally induced flexure between having the stiffener ring in place and not having the stiffener ring. As will be shown infra, the tests demonstrate that the stiffener ring substantially increases the chip carrier flexure and therefore makes the chip carrier more vulnerable to cracking at low temperature.

FIG. **14** illustrates thermally induced displacement measurements along a bottom surface **23** of the chip carrier **21** of FIG. **13**, at ambient room temperature (about 21° C.). The stiffener ring **15** is on the peripheral portion of the chip carrier **21**. The bottom surface **23** may be subsequently coupled to a circuit card by any applicable conductive coupling structure such as a ball grid array (BGA) conductive coupling structure. In relation to the measurements, the chip carrier **21** of FIG. **13** is square with a height of 1.29 mm in the direction **22** and dimensions of 42.5 mm×42.5 mm normal to the direction **22**, the stiffener ring **15** and adhesive **16** have a combined height of 0.73 mm in the direction **22** and a thickness of 10 mm normal to the direction **22**, and the chip **10** has dimensions of 18.5 mm×18.5 mm normal to the direction **22**. Thus in relation to the measurements, the stiffener ring **15** occupies about 47% of an area of the top surface **27** of the chip carrier **21**. The chip **10** was attached to the chip carrier **21** at a reflow temperature of about 240° C., and the bottom surface **23** was essentially flat at the reflow temperature. A consequent displacement along the bottom surface **23** occurred at ambient room temperature of about 21° C. because of thermal contraction of the chip carrier **21** under a mismatch in CTE between the chip **10** and the chip carrier **21**, in combination with the high stiffness of the chip carrier **21** which resists the thermal expansion. In relation to the measurements, the chip **10** had a CTE of about 3 ppm/° C., and the chip carrier **21** had a CTE of about 18 ppm/° C. FIG. **14** shows a maximum displacement of about 3.5 mils at a center point **91** of the bottom surface **23**, and relatively smaller displacement at peripheral points **92** and **93** of the bottom surface **23**. The high maximum displacement of about 3.5 mils at the center point **91** is due to the constraining effect of the stiffener ring **15** on chip carrier **21** material in the peripheral portion of the chip carrier **21** (especially under the stiffener ring **15**), which forces the chip carrier **21** material in the central portion of the chip carrier **21** to be increasingly displaced in order to accommodate the thermal stresses. The negligible displacement at peripheral edges of the bottom surface **23** is due to a constraining effect of the stiffener ring **15** on peripheral portions of the chip carrier **21** where the stiffener ring **15** is mechanically coupled to the chip carrier **21**. Interestingly, a key feature of the stiffener ring **22** in Sylvester is its constraining functionality (see Sylvester, col. 9, line 14, where the stiffener ring **22** is actually labeled as a "constraining ring."). The differential displacement between the center and the peripheral portions of the bottom surface **23**, places significant stress on the chip carrier **21** because the chip carrier **21** is very stiff (i.e., the elastic modulus of the chip carrier **21** is of the type described by Sylvester in U.S. Pat. 6,027,590, col. 12, lines 45–51, and is thus in the range of 9.42×10^5 psi to 14.9×10^5 psi as discussed supra) and lacks sufficient pliability needed for accommodating the resultant thermal strains. The stress on the chip carrier **21** is even more problematic if the temperature is lowered. For example, if during thermal cycling the chip carrier **21** is subjected to low temperatures (e.g., below about 0° C.), then the displacement along the bottom surface **23** increases. In particular at about −40° C., the maximum displacement of about 3.5 mils in FIG. **14** increases to about 5 mils, which makes the chip carrier **21** highly vulnerable to mechanical weakening and cracking.

FIG. **15** depicts FIG. **13** with the stiffener ring **15** removed, in accordance with embodiments of the present invention. With the stiffener ring **15** removed, the chip carrier **21** is able to undergo "natural" flexing (i.e., be in a state of natural flexure) in response to thermal stresses caused by CTE differences between the chip **10** and the chip carrier **21** when the temperature of the chip carrier **21** is depressed. In particular, the bottom surface **23** in FIG. **15** is able to undergo "natural" flexing in response to said thermal stresses. Natural flexing is defined as flexing that is not limited by a constraining structure coupled to the chip carrier **21** within a peripheral portion of the chip carrier **21**. An example of a constraining structure is the stiffener ring **15** of FIG. **13**.

Returning to FIG. **15** wherein there is no stiffener ring on said peripheral portion of the top surface **27**, a peripheral portion of the top surface **27** of the chip carrier **21** is essentially exposed. The peripheral portion of the top surface **27** is "essentially exposed" (as opposed to "totally exposed"), because additional structure such as solder joints or circuitization may cover a small percentage of a surface area of the peripheral portion of the top surface **27**, wherein the additional structure covers only a small portion (e.g., about 1%) of the peripheral portion of the top surface **27**, and thus leaves most of the surface area (e.g., about 99%) of the peripheral portion of the top surface **27** exposed. In contrast, the stiffener ring in the tests of FIG. **14** covers a much larger percentage (e.g., about 85% to about 90%) of the peripheral portion of the top surface **27**. Note that "essentially exposed" includes "totally exposed" (i.e., 100% exposed) as a special case.

FIG. **16** depicts thermally induced displacement measurements along a bottom surface of the chip carrier of FIG. **15**, at ambient room temperature of about 21° C., wherein the chip carrier configuration with respect to structure, geometry, materials, etc. is the same as that the chip carrier configuration relating to FIG. **14**. There is no stiffener ring on the chip carrier **21**. FIG. **16** shows a maximum room-temperature displacement of about 2.0 mils at about the center point **91** of the bottom surface **23** of the chip carrier **21**, which represents about a 43% reduction in maximum displacement relative to the displacement (3.5 mils) for the stiffener ring **15** configuration associated with FIG. **14** at room temperature of about 21° C. If during thermal cycling, the chip carrier **21** is subjected to the low temperature of about −40° C., the maximum displacement of about 2.0 mils in FIG. **16** would increase to about 2.5 mils, which represents about a 50% reduction in maximum displacement relative to the displacement (5.0 mils) in the stiffener ring **15** configuration associated with FIG. **14** at −40° C. Hence, removal of the stiffener ring **15** beneficially reduced the chip carrier **21** flexing by up to about 50%. The numerical percent reduction in maximum displacement is case dependent, and depends particularly on the elastic modulus of the chip carrier **21**, the CTE mismatch between the chip carrier **21** and the chip **10**, and the geometry of the mechanical

interface between the stiffener ring **15** and the chip carrier **21**. Generally with current technology and in consideration of the aforementioned case-dependent factors, the percent reduction in maximum displacement resulting from removing the stiffener ring **15** is at least about 25% if the temperature at the chip carrier changes from ambient room temperature of about 21° C. to a temperature of about −40° C. Thus, by teaching removal of the stiffener ring **15** (i.e., not having a stiffener ring **15** on the chip carrier **21** top surface **27**), the present invention provides a structure and method that substantially reduces maximum displacements of the bottom surface **23** of the chip carrier **21** and consequently reduces a probability of chip carrier cracking in stiff chip carriers, particularly at low temperatures between about 0° C. and about −40° C.

Another advantage of avoiding use of the stiffener ring **15** on the chip carrier **21** relates to conductive wiring (e.g., copper wiring) on the top surface **27**, or the bottom surface **23**, of the chip carrier **21**. A ductility of the conductive wiring assists the conductive wiring in withstanding thermally induced displacements on the top surface **27**, or the bottom surface **23**, respectively. An ability of the conductive wiring to so withstand the thermally induced displacements diminishes as the magnitude of the thermally induced displacements increases. Thus, by reducing the magnitude of the thermally induced displacements, the stiff chip carrier **21** that is free of the stiffener ring **15** helps to prevent structural damage (e.g., cracking) of the conductive wiring under. conditions of thermally induced displacements in the chip carrier **21**. Thus, with the stiff chip carrier **21** free of the stiffener ring **15** and thus capable of being in a state of natural flexure, the conductive wiring is better able to maintain its structural integrity under thermally induced displacements of the chip carrier **21** than if than if the chip carrier **21** were unable to be in a state of natural flexure.

A chip carrier may have an isotropic CTE when its temperature is above its glass transition temperature (GTT). The GTT is a temperature at which amorphous domains of a polymer takes on characteristic properties of glassy state-brittleness, stiffness, and rigidity. At the GTT, the solid, glassy polymer begins to soften and flow. An isotropic CTE is characterized by thermal expansion or contraction at a rate that is independent of a direction of the thermal expansion or contraction. If the chip carrier **21** has an isotropic CTE when its temperature is above its GTT, then presence of the stiffener ring **15** would inhibit thermal expansion or contraction to an extent that the chip carrier **21** might crack in its inability to accommodate the thermally-induced strain. In contrast, an absence of the stiffener ring **15** would enable the chip carrier **21** to avoid structural damage by its ability to expand naturally in response to the thermally-induced strain.

While the chip carrier **21** of the present invention has been depicted in the embodiments herein as not being coupled to the stiffener ring **15**, the scope of the present invention includes having the chip carrier **21** free of any constraining structure coupled to the peripheral portion of the chip carrier **21**. As explained infra in conjunction with FIG. **15**, a constraining structure prevents the chip carrier **21** from being in a state of natural flexure in response to thermal stresses caused by the difference in the CTE of the chip carrier and the CTE of the chip.

While preferred and particular embodiments of the present invention have been described herein for purposes of illustration, many modifications and changes will become apparent to those skilled in the art. Accordingly, the appended claims are intended to encompass all such modifications and changes as fall within the true spirit and scope of this invention.

We claim:

1. An electronic structure, comprising:

a chip carrier having an elastic modulus of at least about 3×10^5 psi, wherein there is no stiffener ring coupled to a peripheral portion of the chip carrier; and

a semiconductor chip coupled to a central portion of the chip carrier, wherein the peripheral portion of the chip carrier is essentially exposed.

2. The electronic structure of claim **1**, wherein the semiconductor chip has a coefficient of thermal expansion (CTE) of C_1, wherein the chip carrier has a CTE of C_2, wherein $C_2>C_1$, and wherein the chip carrier is able to undergo natural flexing in response to thermal stresses caused by a difference between C_2 and C_1.

3. The electronic structure of claim **2**, wherein the chip carrier is under the thermal stresses caused by the difference between C_2 and C_1, and wherein the chip carrier is in a state of natural flexure.

4. The electronic structure of claim **3**, wherein the chip carrier is at a temperature in a range of about 21° C. to about −40° C., and wherein a maximum thermally induced displacement of a surface of the chip carrier is at least about 25% less than if the stiffener ring were coupled to the peripheral portion of the chip carrier.

5. The electronic structure of claim **1**, wherein the chip carrier includes an epoxy based material.

6. The electronic structure of claim **1**, wherein the chip carrier includes a material selected from the group consisting of bismalimide-triazine (BT)-Epoxy/Glass, a cyanate ester resin, cyanate ester-epoxy-ePTFE, and combinations thereof.

7. The electronic structure of claim **1**, wherein the chip carrier has an isotropic coefficient of thermal expansion (CTE) at a temperature above the glass transition temperature (GTT) of the chip carrier.

8. The electronic structure of claim **7**, wherein the chip carrier is at a temperature that is above the GTT.

9. The electronic structure of claim **1**, further comprising conductive wiring on a surface of the chip carrier, wherein the surface is selected from the group consisting of a top surface, a bottom surface, and a combination thereof, and wherein the conductive wiring is better able to maintain its structural integrity under a thermally induced displacement of the chip carrier than if the stiffener ring were present.

10. A method of forming an electronic structure, comprising:

providing a chip carrier having an elastic modulus of at least about 3×10^5 psi, wherein there is no stiffener ring coupled to a peripheral portion of the chip carrier; and

coupling a semiconductor chip to a central portion of the chip carrier, wherein the peripheral portion of the chip carrier is essentially exposed.

11. The method of claim **10**, wherein the semiconductor chip has a coefficient of thermal expansion (CTE) of C_1, wherein the chip carrier has a CTE of C_2, wherein $C_2>C_1$, and wherein the chip carrier is able to undergo natural flexing in response to thermal stresses caused by a difference between C_2 and C_1.

12. The method of claim **11**, further comprising subjecting the chip carrier to,the thermal stresses caused by the difference between C_2 and C_1, resulting in natural flexing of the chip carrier.

13. The method of claim **12**, wherein subjecting the chip carrier to the thermal stresses caused by the difference between C_2 and C_1, includes subjecting the chip carrier to a temperature in a range of about 21° C. to about −40° C, resulting in a surface of the chip carrier being maximally

displaced by at least about 25% less than if the stiffener ring were coupled to the peripheral portion of the chip carrier.

14. The method of claim **10**, wherein the chip carrier includes an epoxy based material.

15. The method of claim **10**, wherein the chip carrier includes a material selected from the group consisting of bismalimide-triazine (BT)-Epoxy/Glass, a cyanate ester resin, cyanate ester-epoxy-ePTFE, and combinations thereof.

16. The method of claim **10**, wherein the chip carrier has an isotropic coefficient of thermal expansion (CTE) at a temperature above the glass transition temperature (GTT) of the chip carrier.

17. The method of claim **16**, further comprising subjecting the chip carrier to a temperature that is above the GTT.

18. The method of claim **10**, further comprising forming conductive wiring on a surface of the chip carrier, wherein the surface is selected from the group consisting of a top surface, a bottom surface, and a combination thereof, and wherein the conductive wiring is better able to maintain its structural integrity under a thermally induced displacement of the chip carrier than if the stiffener ring were present.

* * * * *