US011107768B2

(12) **United States Patent**
Yang

(10) **Patent No.: US 11,107,768 B2**
(45) **Date of Patent: Aug. 31, 2021**

(54) **CHIP PACKAGE**

(71) Applicant: **Ping-Jung Yang**, Hsin-Chu (TW)

(72) Inventor: **Ping-Jung Yang**, Hsinchu (TW)

(73) Assignee: **Ping-Jung Yang**, HsinChu (TW)

(*) Notice: Subject to any disclaimer, the term of this patent is extended or adjusted under 35 U.S.C. 154(b) by 15 days.

(21) Appl. No.: **16/752,650**

(22) Filed: **Jan. 26, 2020**

(65) **Prior Publication Data**

US 2020/0161245 A1 May 21, 2020

Related U.S. Application Data

(63) Continuation of application No. 15/261,956, filed on Sep. 11, 2016, now Pat. No. 10,622,310, which is a (Continued)

(51) **Int. Cl.**
H01L 23/538 (2006.01)
H01L 23/15 (2006.01)
(Continued)

(52) **U.S. Cl.**
CPC ***H01L 23/5384*** (2013.01); ***H01L 23/15*** (2013.01); ***H01L 23/49811*** (2013.01); ***H01L 23/49827*** (2013.01); ***H01L 23/49833*** (2013.01); ***H01L 51/0096*** (2013.01); *C09K 2323/00* (2020.08); *C09K 2323/03* (2020.08);
(Continued)

(58) **Field of Classification Search**
None
See application file for complete search history.

(56) **References Cited**

U.S. PATENT DOCUMENTS

4,221,047 A 9/1980 Marken et al.
4,639,543 A 1/1987 Fang
(Continued)

FOREIGN PATENT DOCUMENTS

WO 2012/0068271 3/2012
WO 2013/138452 9/2013

Primary Examiner — Xiaoming Liu

(57) **ABSTRACT**

A display device comprises a display panel substrate and a glass substrate over said display panel substrate, wherein said display panel substrate comprises multiple contact pads, a display area, a first boundary, a second boundary, a third boundary and a fourth boundary, wherein said display area comprises a first edge, a second edge, a third edge and a fourth edge, wherein said first boundary is parallel to said third boundary and said first and third edges, wherein said second boundary is parallel to said fourth boundary and said second and fourth edges, wherein a first least distance between said first boundary and said first edge, wherein a second least distance between said second boundary and said second edge, a third least distance between said third boundary and said third edge, a fourth distance between said fourth boundary and said fourth edge, and wherein said first, second, third and fourth least distances are smaller than 100 micrometers, and wherein said glass substrate comprising multiple metal conductors through in said glass substrate and multiple metal bumps are between said glass substrate and said display panel substrate, wherein said one of said metal conductors is connected to one of said contact pads through one of said metal bumps.

28 Claims, 64 Drawing Sheets

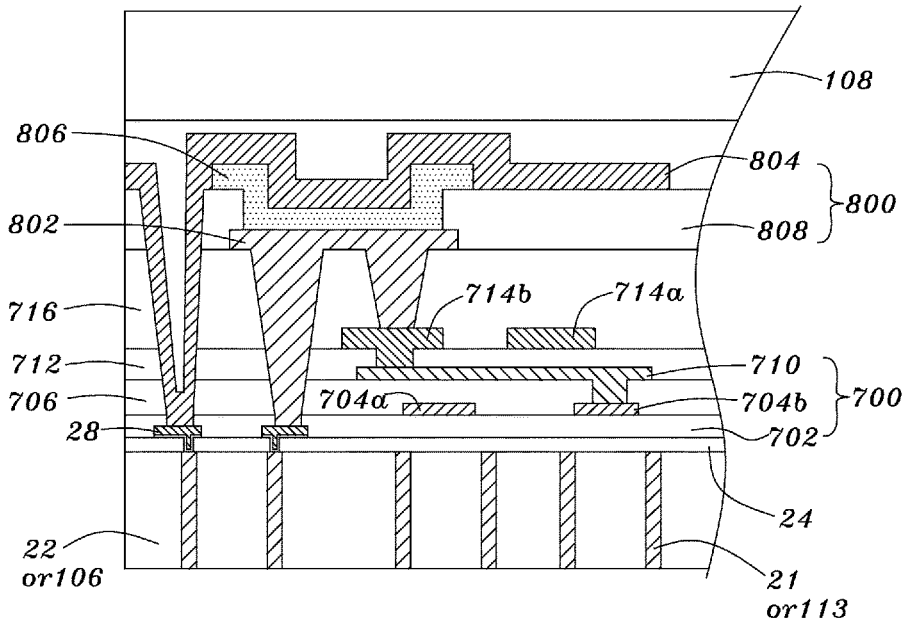

Related U.S. Application Data

continuation-in-part of application No. 14/036,256, filed on Sep. 25, 2013, now Pat. No. 9,615,453.

(60) Provisional application No. 61/705,649, filed on Sep. 26, 2012, provisional application No. 62/219,249, filed on Sep. 16, 2015.

(51) **Int. Cl.**

H01L 23/498	(2006.01)
H01L 51/00	(2006.01)
H01L 23/00	(2006.01)
H01L 25/16	(2006.01)

(52) **U.S. Cl.**

CPC .. *H01L 23/49816* (2013.01); *H01L 23/49822* (2013.01); *H01L 24/05* (2013.01); *H01L 24/13* (2013.01); *H01L 24/16* (2013.01); *H01L 25/16* (2013.01); *H01L 2224/03462* (2013.01); *H01L 2224/0401* (2013.01); *H01L 2224/0558* (2013.01); *H01L 2224/05124* (2013.01); *H01L 2224/05144* (2013.01); *H01L 2224/05147* (2013.01); *H01L 2224/05155* (2013.01); *H01L 2224/05572* (2013.01); *H01L 2224/05624* (2013.01); *H01L 2224/05644* (2013.01); *H01L 2224/05647* (2013.01); *H01L 2224/05655* (2013.01); *H01L 2224/1146* (2013.01); *H01L 2224/11334* (2013.01); *H01L 2224/11462* (2013.01); *H01L 2224/131* (2013.01); *H01L 2224/13005* (2013.01); *H01L 2224/1308* (2013.01); *H01L 2224/13022* (2013.01); *H01L 2224/13076* (2013.01); *H01L 2224/13109* (2013.01); *H01L 2224/13111* (2013.01); *H01L 2224/13144* (2013.01); *H01L 2224/13147* (2013.01); *H01L 2224/13155* (2013.01); *H01L 2224/16147* (2013.01); *H01L 2224/16237* (2013.01); *H01L 2224/2919* (2013.01); *H01L 2224/32225* (2013.01); *H01L 2224/45124* (2013.01); *H01L 2224/45139* (2013.01); *H01L 2224/45144* (2013.01); *H01L 2224/45147* (2013.01); *H01L 2224/48091* (2013.01); *H01L 2224/48228* (2013.01); *H01L 2224/48465* (2013.01); *H01L 2224/73204* (2013.01); *H01L 2224/73265* (2013.01); *H01L 2924/12042* (2013.01); *H01L 2924/12044* (2013.01); *H01L 2924/1461* (2013.01); *H01L 2924/15311* (2013.01); *H01L 2924/181* (2013.01); *H01L 2924/30107* (2013.01); *Y02E 10/549* (2013.01)

(56) **References Cited**

U.S. PATENT DOCUMENTS

4,975,103	A	12/1990	Ackermann et al.
5,294,238	A	3/1994	Fukada et al.
5,705,855	A	1/1998	Carson et al.
6,002,592	A	12/1999	Nakamura et al.
6,156,413	A	12/2000	Tomari et al.
6,177,707	B1	1/2001	Dekker et al.
6,194,762	B1	2/2001	Yamazaki et al.
6,265,771	B1	7/2001	Ference et al.
6,309,901	B1	10/2001	Tahon et al.
6,339,197	B1	1/2002	Fushie et al.
6,423,570	B1	7/2002	Ma et al.
6,434,016	B2	8/2002	Zeng et al.
6,539,750	B1	4/2003	Takagi et al.
6,673,698	B1	1/2004	Lin et al.
6,691,409	B2	2/2004	Suzuki et al.
6,772,514	B2	8/2004	Ogura et al.
6,799,438	B2	10/2004	Herzbach et al.
6,839,946	B2	1/2005	Ylilammi et al.
6,894,358	B2	5/2005	Leib et al.
6,989,604	B1	1/2006	Woo et al.
7,019,406	B2	3/2006	Huang et al.
7,038,309	B2	5/2006	Hsu et al.
7,071,521	B2	7/2006	Leib et al.
7,072,018	B2	7/2006	Mori et al.
7,091,589	B2	8/2006	Mori et al.
7,151,009	B2	12/2006	Kim et al.
7,259,080	B2	8/2007	Quenzer et al.
7,279,771	B2	10/2007	Sunohara et al.
7,285,834	B2	10/2007	Leib et al.
7,337,540	B2	3/2008	Kurosawa
7,362,403	B2	4/2008	Uehara
7,476,623	B2	1/2009	Schreder et al.
7,557,440	B2	7/2009	Yamamoto et al.
7,569,422	B2	8/2009	Lin
7,749,900	B2	7/2010	Li et al.
7,808,799	B2	10/2010	Kawabe
7,993,510	B2	8/2011	En
8,193,555	B2	6/2012	Lin et al.
8,207,453	B2	6/2012	Ma et al.
8,338,238	B2	12/2012	Tokunaga et al.
8,354,297	B2	1/2013	Pagaila et al.
8,431,977	B2	4/2013	Yang
8,445,323	B2	5/2013	Lin et al.
8,456,856	B2	6/2013	Lin et al.
8,648,470	B2	2/2014	Lin et al.
8,742,579	B2	6/2014	Pagaila et al.
8,786,060	B2	7/2014	Yen et al.
8,796,137	B2	8/2014	Pagaila et al.
8,822,281	B2	9/2014	Pagaila et al.
8,837,872	B2	9/2014	Yang et al.
8,846,454	B2	9/2014	Shim et al.
8,878,360	B2	11/2014	Meyer et al.
8,883,561	B2	11/2014	Park et al.
8,895,440	B2	11/2014	Choi et al.
8,916,421	B2	12/2014	Gong et al.
8,952,489	B2	2/2015	Elian et al.
8,952,521	B2	2/2015	Wojnowski et al.
8,980,691	B2	3/2015	Lin
8,987,918	B2	3/2015	Razdan et al.
8,993,377	B2	3/2015	Koo et al.
9,048,211	B2	6/2015	Pagaila et al.
9,048,233	B2	6/2015	Wu et al.
9,082,806	B2	7/2015	Lin et al.
9,147,638	B2	9/2015	Liu et al.
9,224,647	B2	12/2015	Koo et al.
9,281,292	B2	3/2016	Hu et al.
9,324,672	B2	4/2016	Pagaila et al.
9,331,060	B2	5/2016	Otremba et al.
9,343,442	B2	5/2016	Chen et al.
9,362,187	B2	6/2016	Ossimitz
9,385,006	B2	7/2016	Lin
9,385,009	B2	7/2016	Lin et al.
9,385,105	B2	7/2016	Meyer et al.
9,397,050	B2	7/2016	Shin et al.
9,406,619	B2	8/2016	Pagaila et al.
9,406,658	B2	8/2016	Lee et al.
9,431,331	B2	8/2016	Do et al.
9,508,626	B2	11/2016	Pagaila et al.
9,524,955	B2	12/2016	Huang et al.
9,593,009	B2	3/2017	Fuergut et al.
9,627,365	B1	4/2017	Yu et al.
9,679,863	B2	6/2017	Lin et al.
9,704,780	B2	7/2017	Marimuthu et al.
9,704,843	B2	7/2017	Kilger et al.
9,735,113	B2	8/2017	Chi et al.
9,837,303	B2	12/2017	Lin et al.
10,043,768	B2	8/2018	Meyer et al.
10,192,796	B2	1/2019	Lin et al.
10,490,521	B2	11/2019	Hu et al.
2002/0038725	A1	4/2002	Suzuki et al.
2002/0145197	A1	10/2002	Ohta et al.
2002/0159243	A1	10/2002	Ogawa et al.
2004/0238945	A1	12/2004	Huang et al.
2005/0012217	A1	1/2005	Mori et al.
2005/0098891	A1	5/2005	Wakabayashi et al.
2006/0006539	A1	1/2006	Matsui et al.

(56) **References Cited**

U.S. PATENT DOCUMENTS

2006/0020371 A1 1/2006 Ham
2006/0292851 A1 12/2006 Lin et al.
2007/0045841 A1 3/2007 Cho et al.
2007/0268581 A1 11/2007 Palmateer
2008/0054457 A1 3/2008 Lin et al.
2008/0080111 A1 4/2008 Lin et al.
2008/0113505 A1 5/2008 Sparks
2008/0129439 A1 6/2008 Nishikawa
2008/0149384 A1 6/2008 Kawabe
2008/0150623 A1 6/2008 Lin et al.
2008/0283277 A1 11/2008 Muramatsu et al.
2008/0284014 A1 11/2008 Lin et al.
2008/0318361 A1 12/2008 Han
2009/0109655 A1 4/2009 Shinozaki
2009/0155959 A1* 6/2009 Lin H01L 25/16 438/124
2009/0174065 A1 7/2009 Hayashi et al.
2009/0230517 A1* 9/2009 Bathan H01L 25/03 257/666
2009/0273073 A1 11/2009 Tachibana et al.
2010/0164030 A1 7/2010 Oggioni et al.
2010/0200898 A1 8/2010 Lin et al.
2010/0246152 A1 9/2010 Lin et al.
2010/0252934 A1* 10/2010 Law H01L 21/76877 257/774
2010/0290191 A1 11/2010 Lin et al.
2011/0026232 A1 2/2011 Lin et al.
2011/0065250 A1 3/2011 Tokunaga
2011/0089574 A1 4/2011 Itoh
2011/0147055 A1 6/2011 Ma et al.
2011/0242050 A1 10/2011 Byun et al.
2011/0257716 A1* 10/2011 Tiedtke A61N 1/0543 607/116
2011/0278736 A1 11/2011 Lin et al.
2011/0285005 A1 11/2011 Lin et al.
2012/0193785 A1 8/2012 Lin et al.
2013/0049217 A1* 2/2013 Gong H01L 24/19 257/774
2013/0277801 A1* 10/2013 Chen H01L 23/49816 257/532
2013/0292846 A1 11/2013 Lee et al.
2013/0307140 A1 11/2013 Huang et al.
2014/0103488 A1 4/2014 Chen et al.
2014/0210101 A1 7/2014 Lin et al.
2014/0252646 A1 9/2014 Hung et al.
2014/0264839 A1 9/2014 Tsai et al.
2014/0367160 A1 12/2014 Yu et al.
2015/0166329 A1 6/2015 Cheng et al.
2017/0345761 A1 11/2017 Yu et al.
2017/0345764 A1 11/2017 Chang et al.
2017/0373004 A1 12/2017 Yu et al.

* cited by examiner

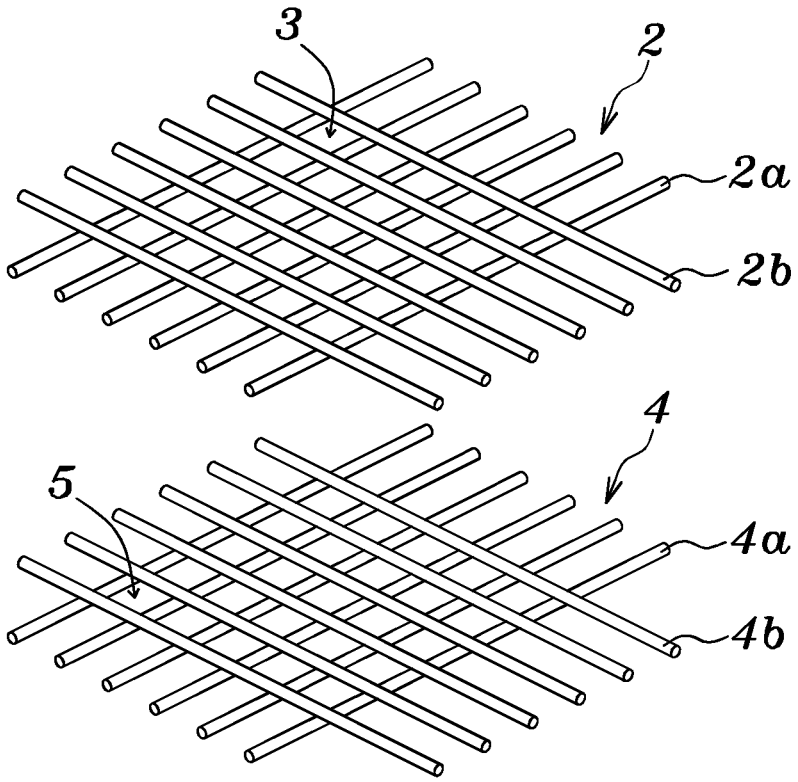

Fig. 1

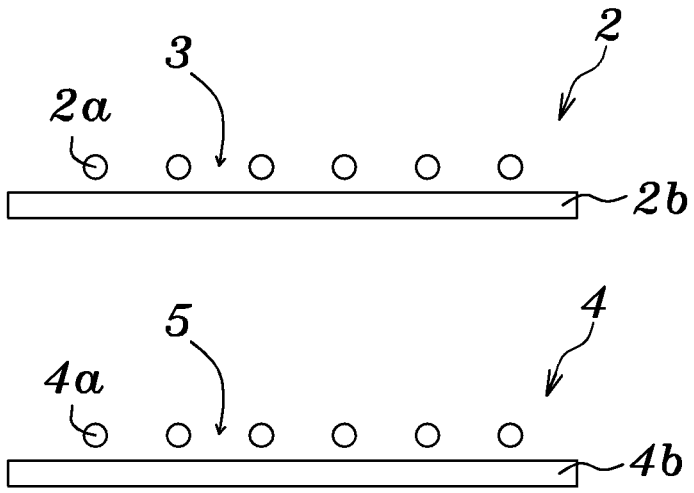

Fig. 2

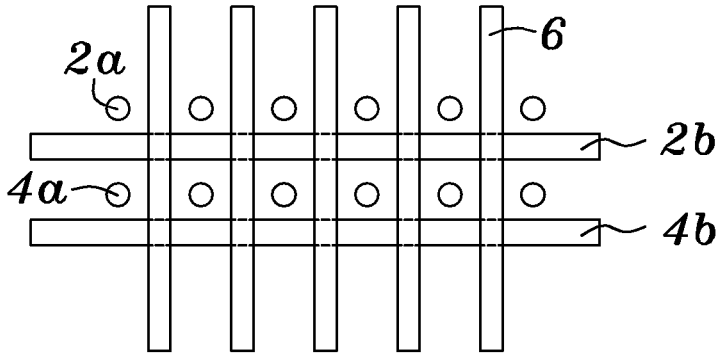

Fig. 3

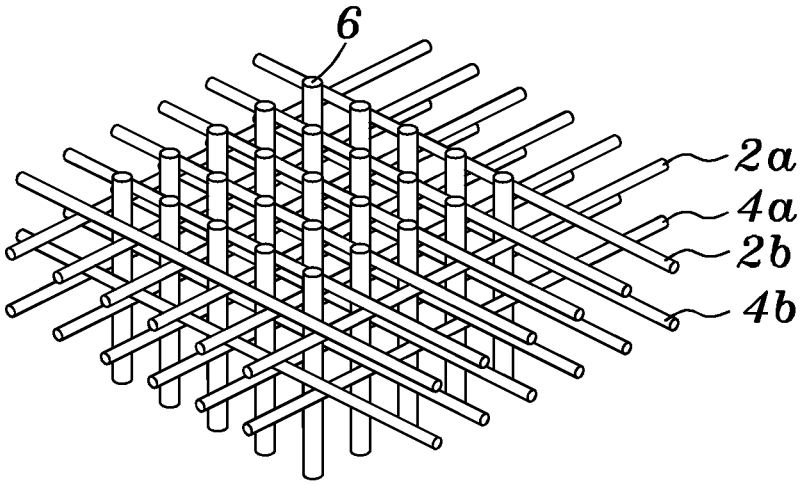

Fig. 4

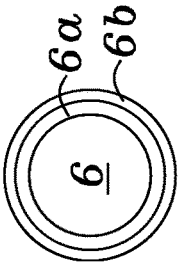

Fig. 5c

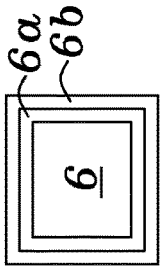

Fig. 5f

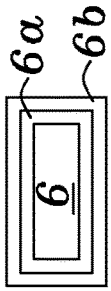

Fig. 5i

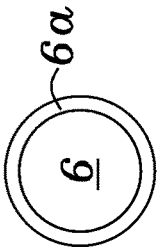

Fig. 5b

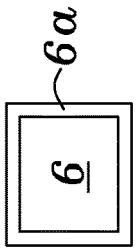

Fig. 5e

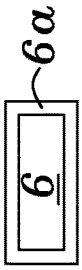

Fig. 5h

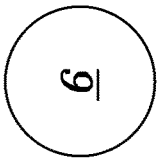

Fig. 5a

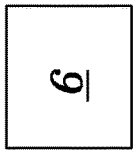

Fig. 5d

Fig. 5g

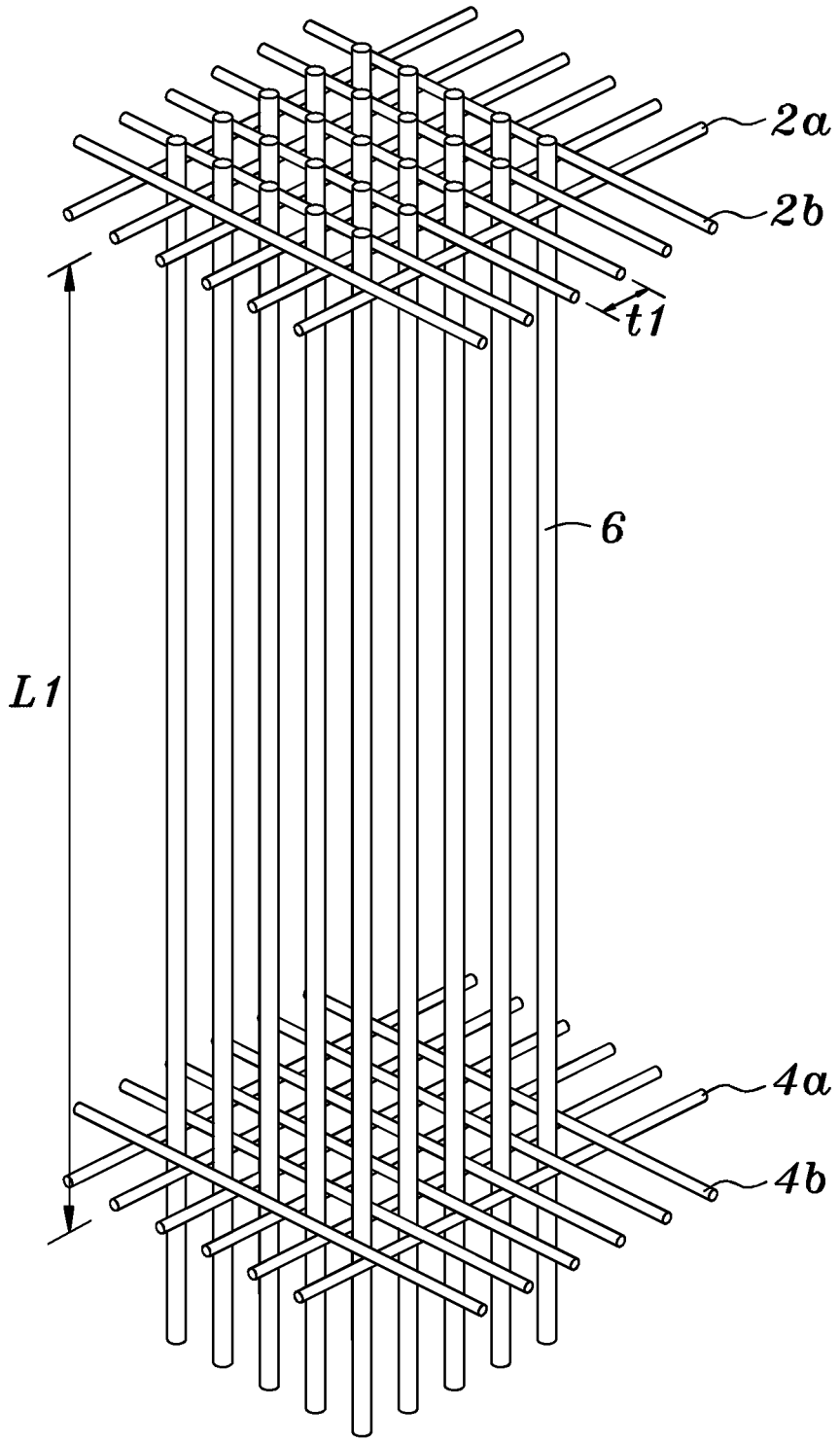

Fig. 6a

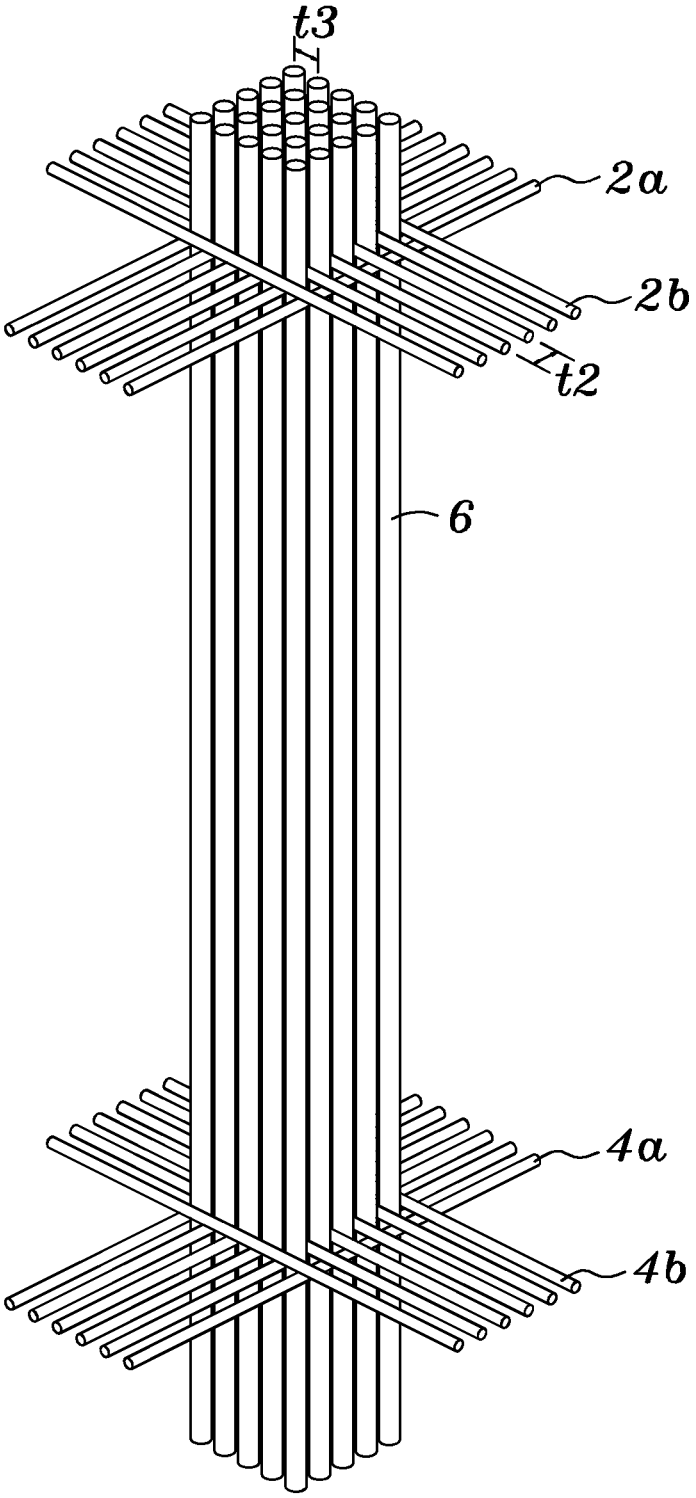

Fig. 6b

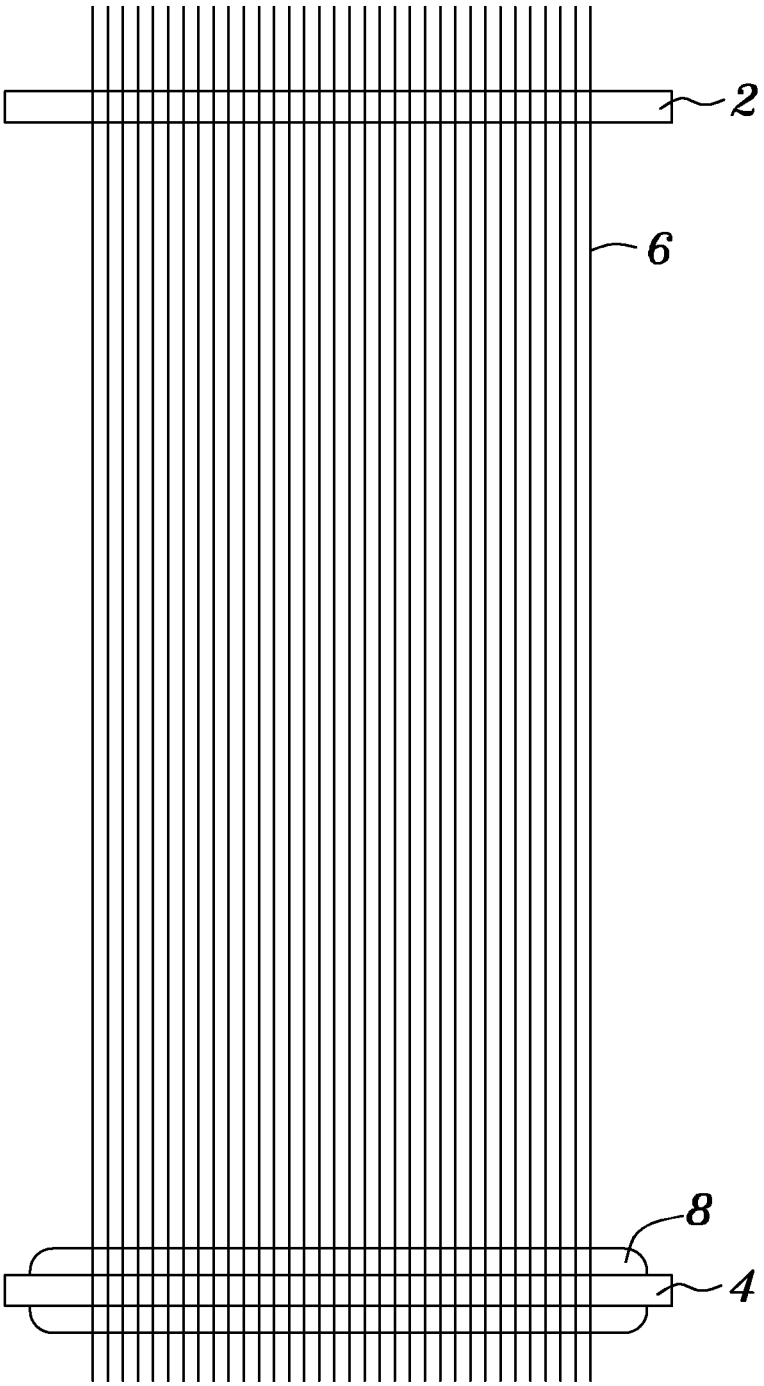

Fig. 6c

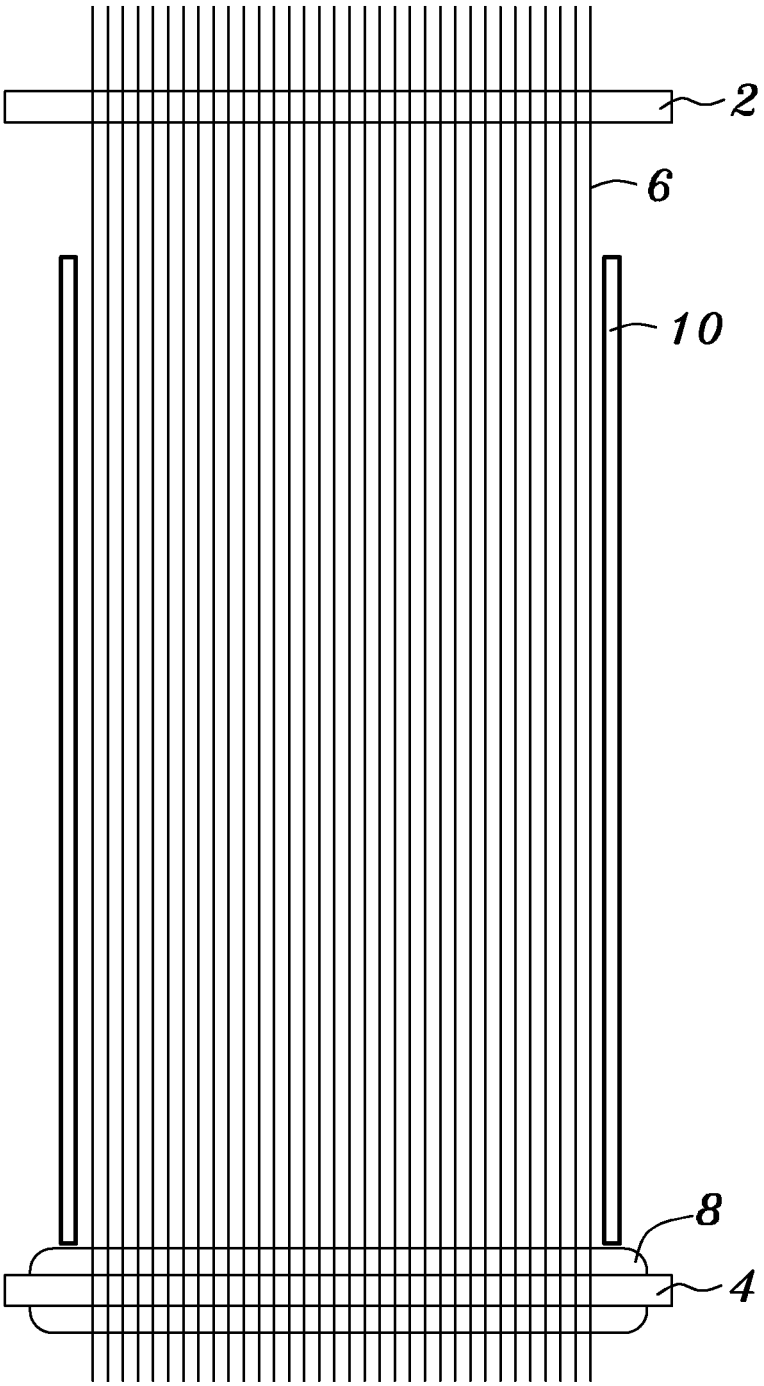

Fig. 6d

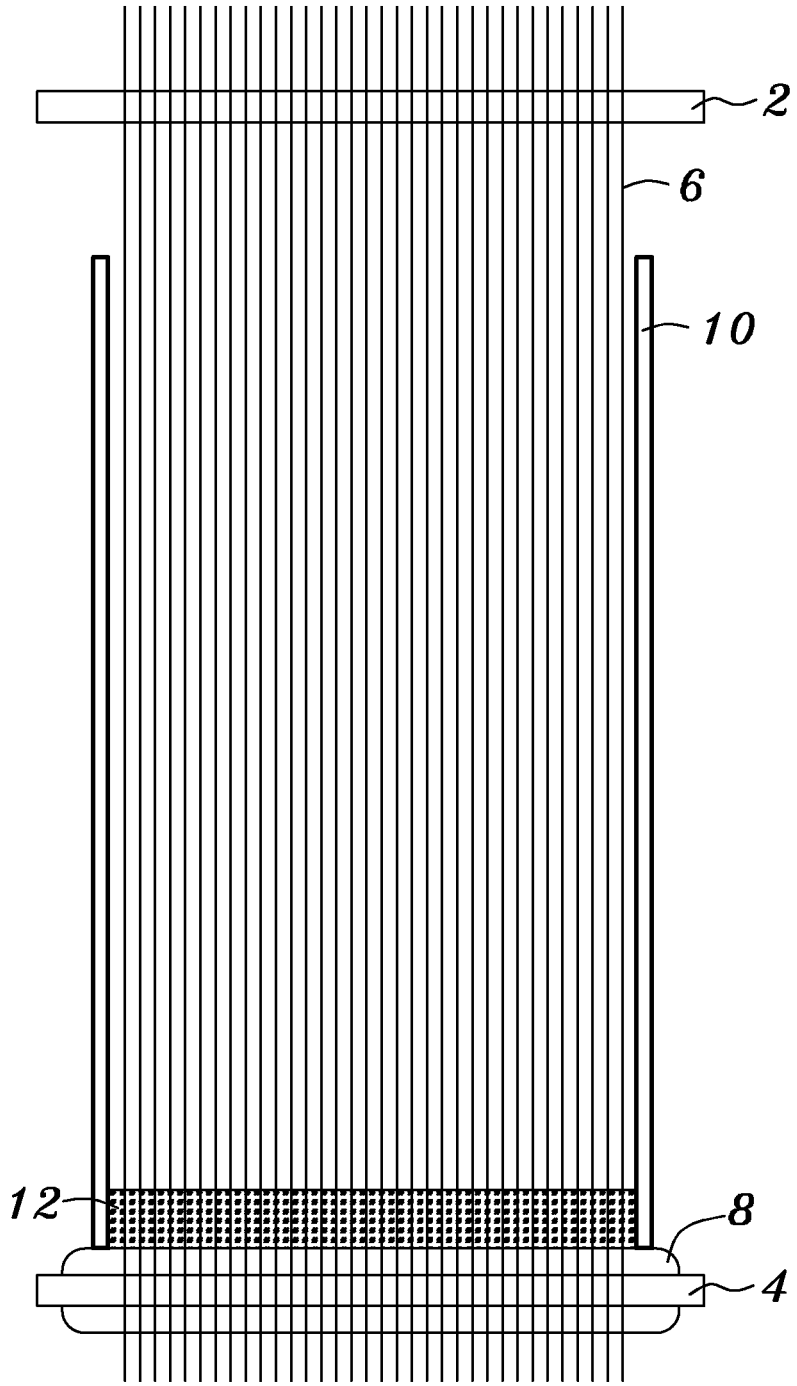

Fig. 6e

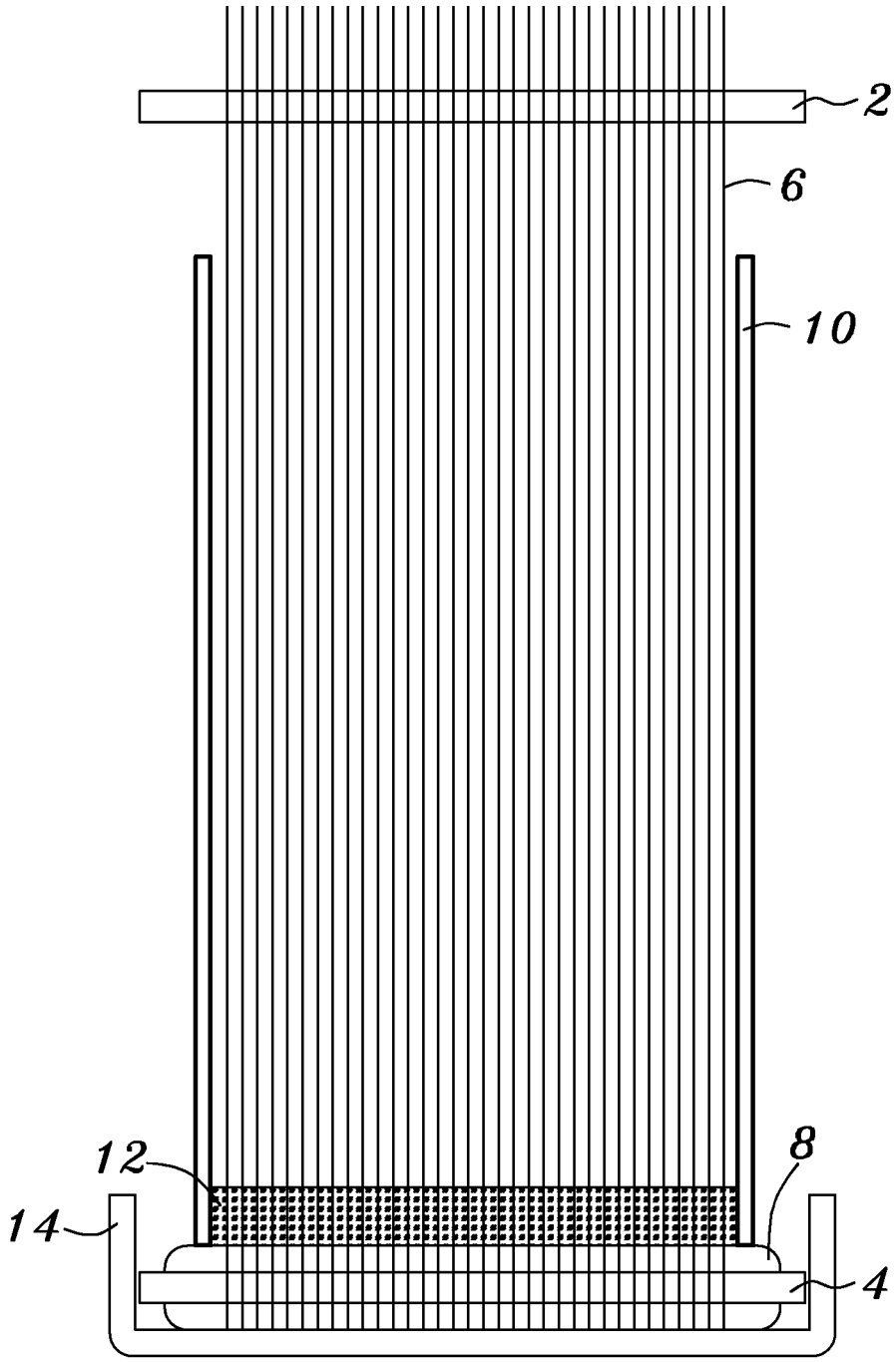

Fig. 6f

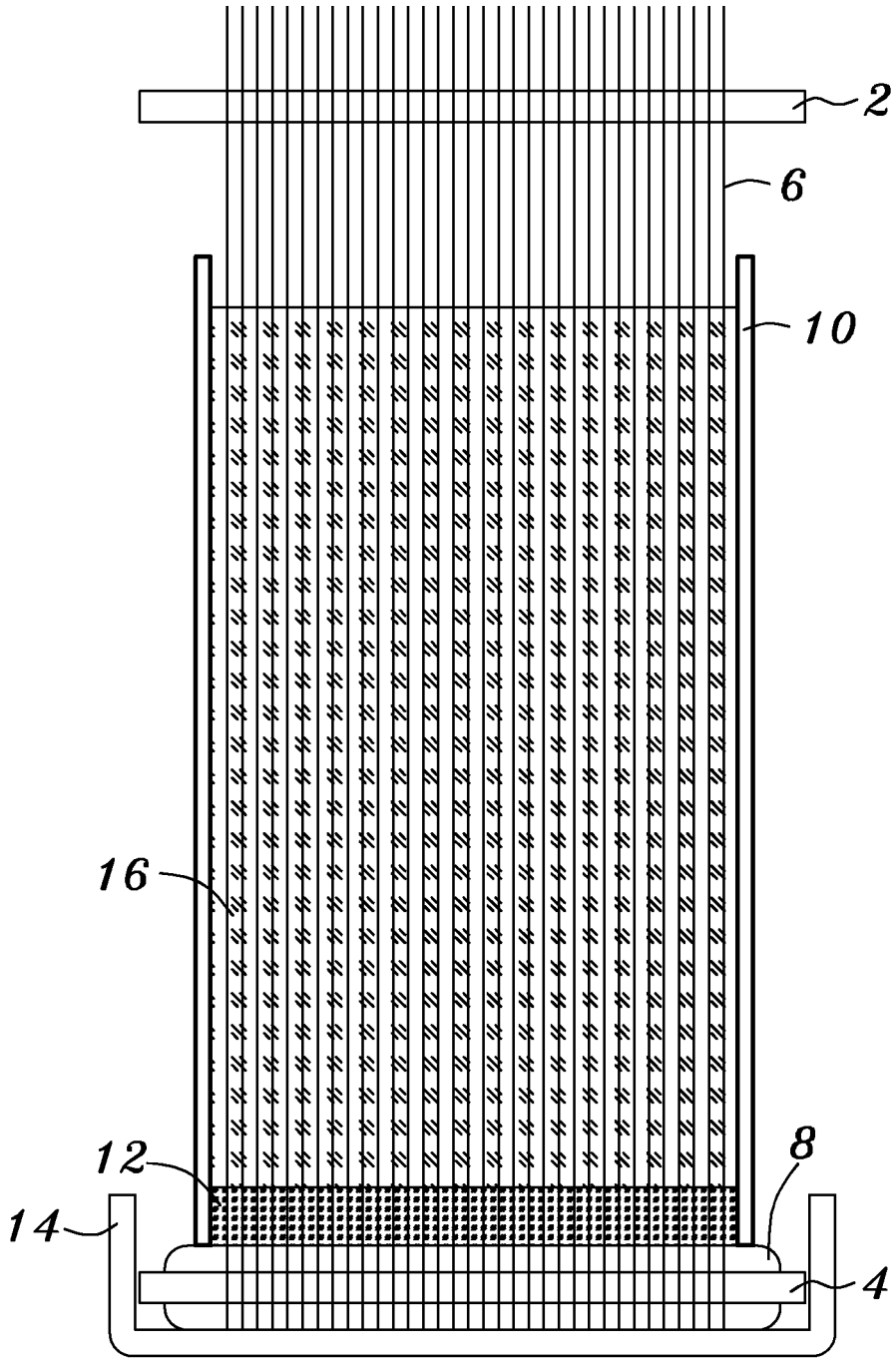

Fig. 6g

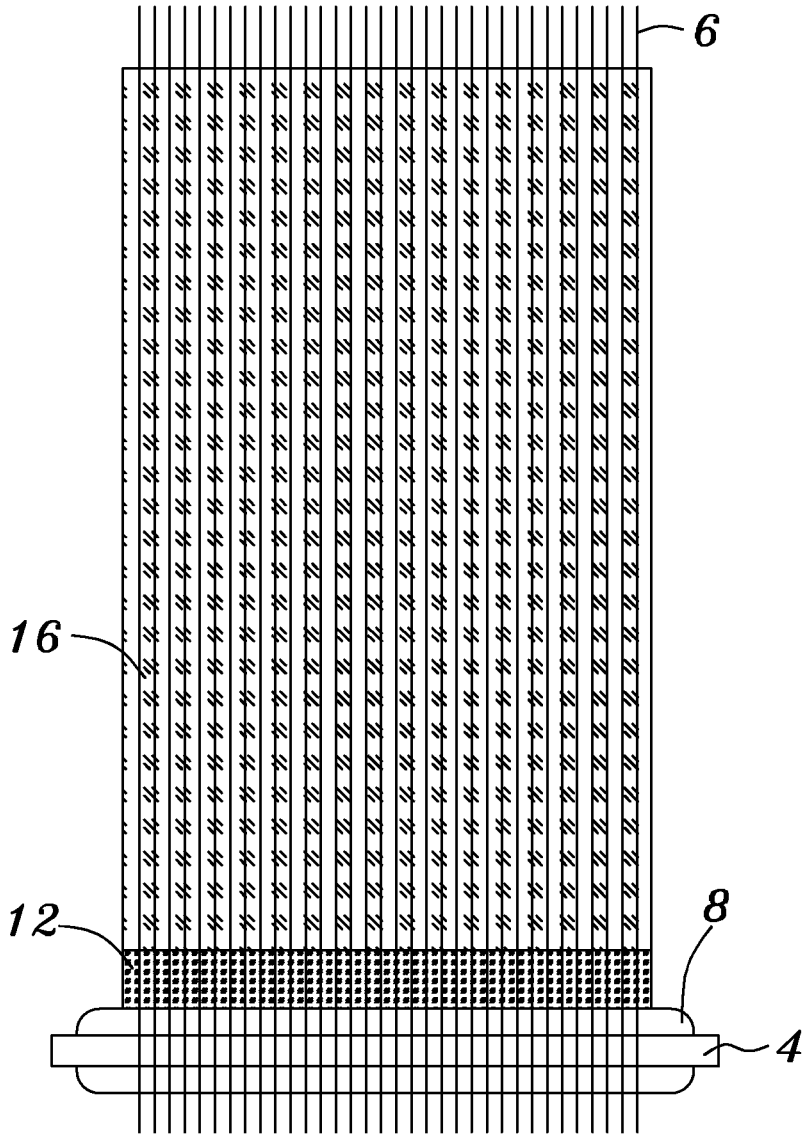

Fig. 6h

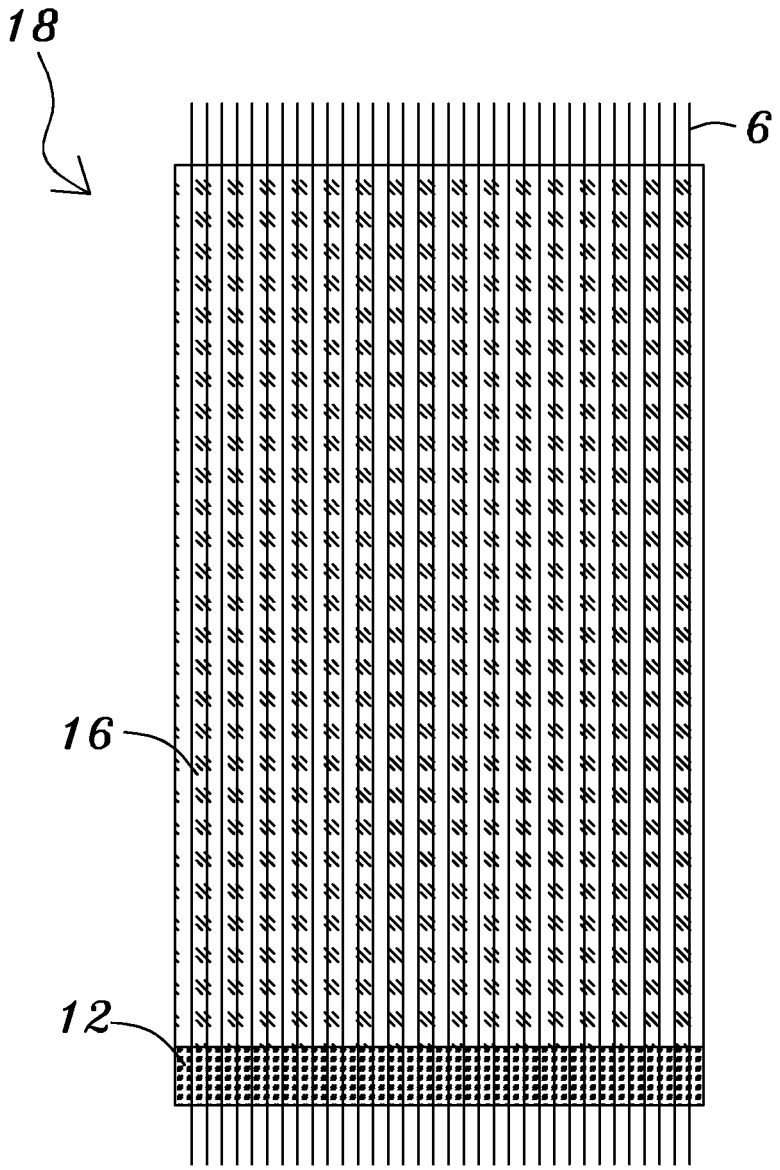

Fig. 6i

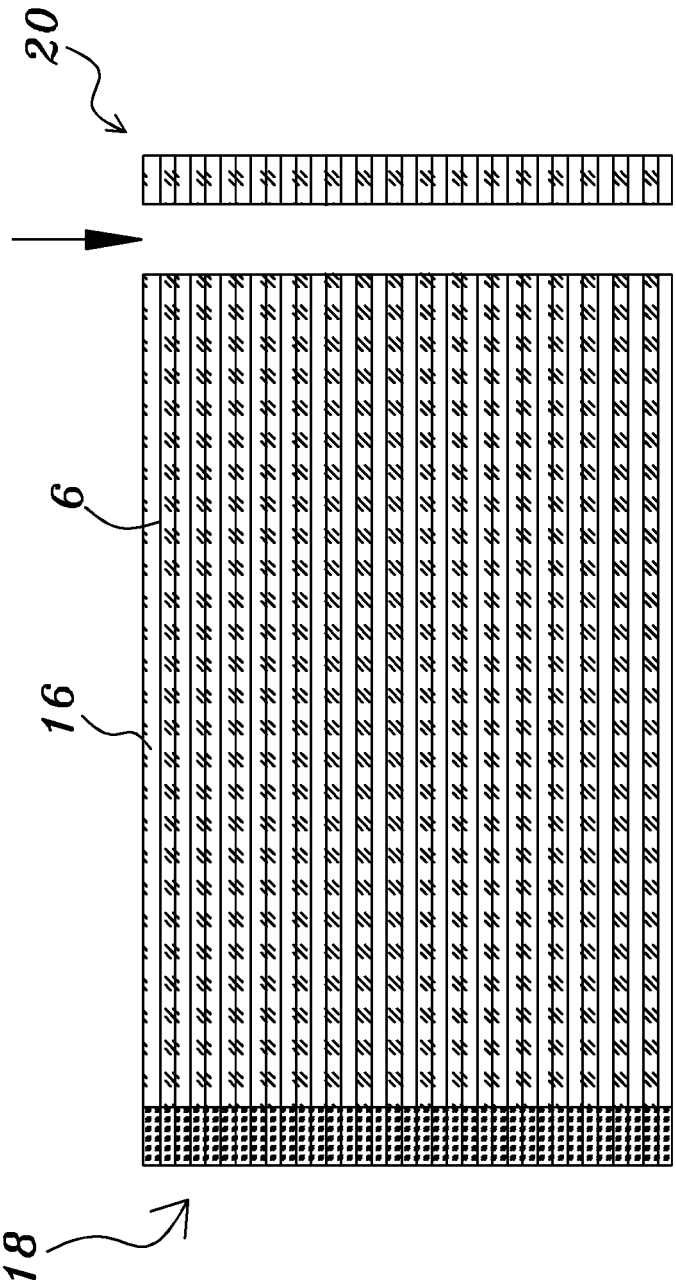

Fig. 6j

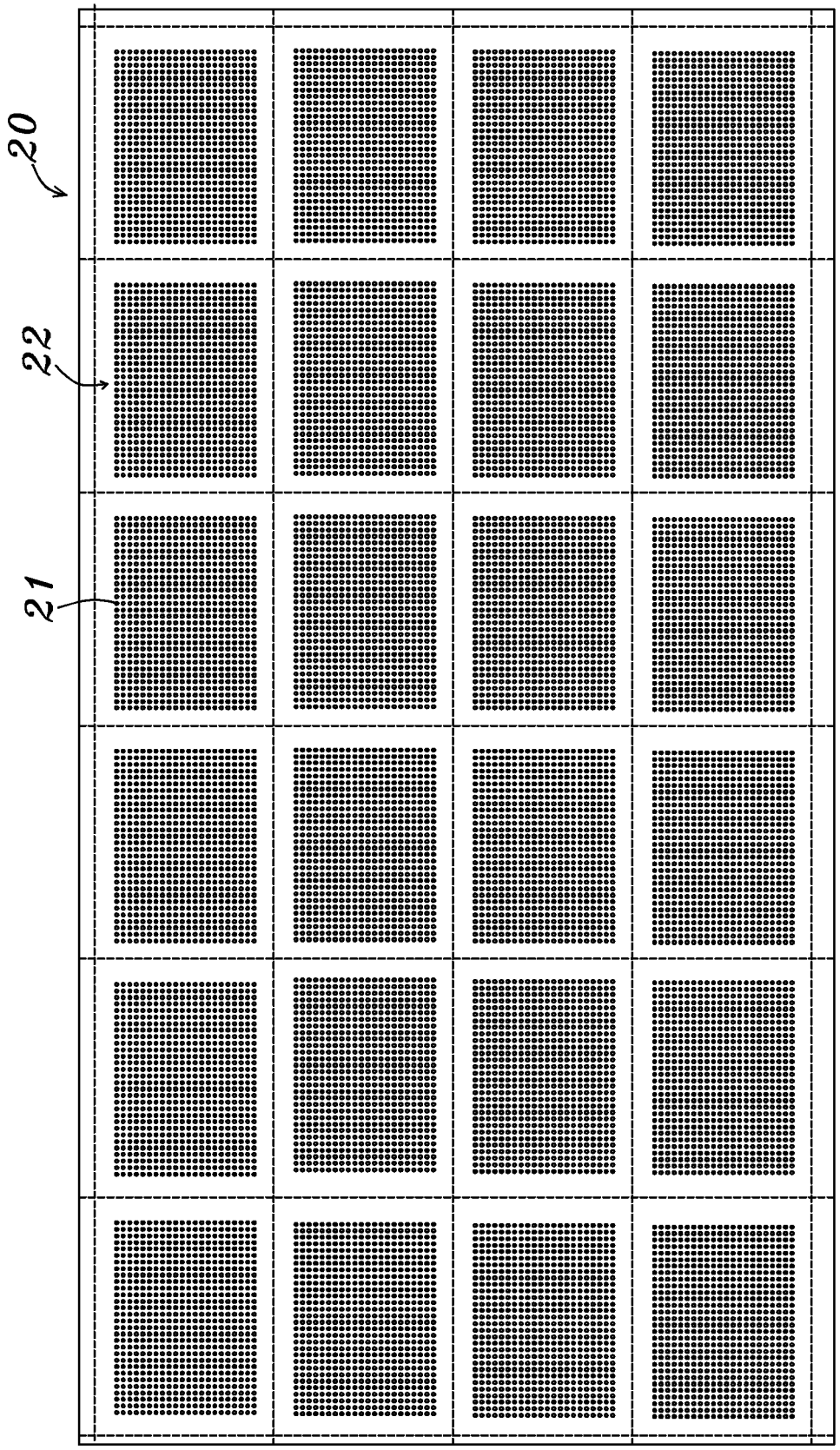

Fig. 6k

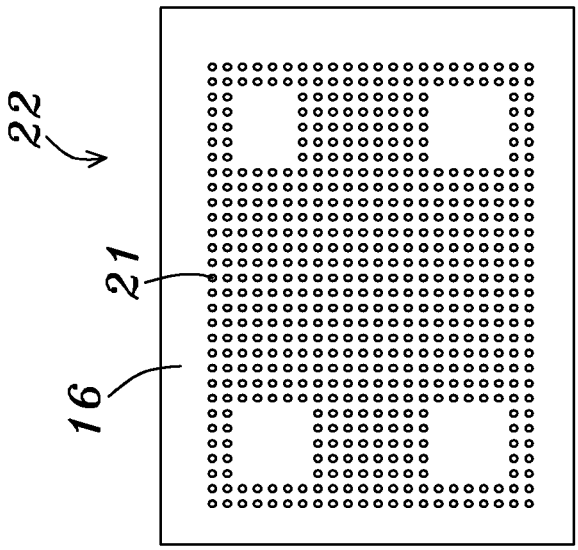

Fig. 6n

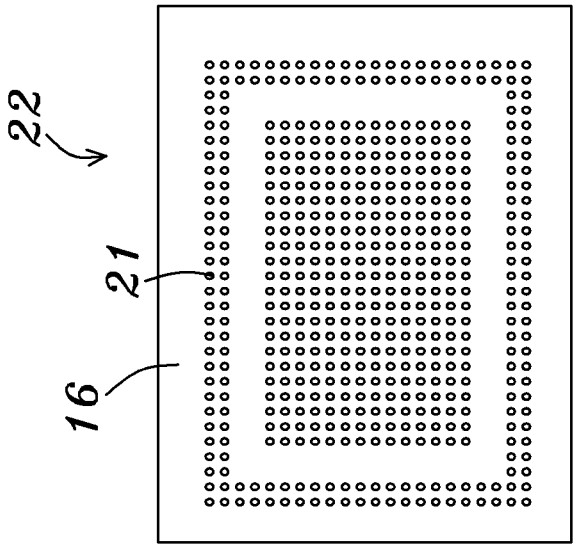

Fig. 6m

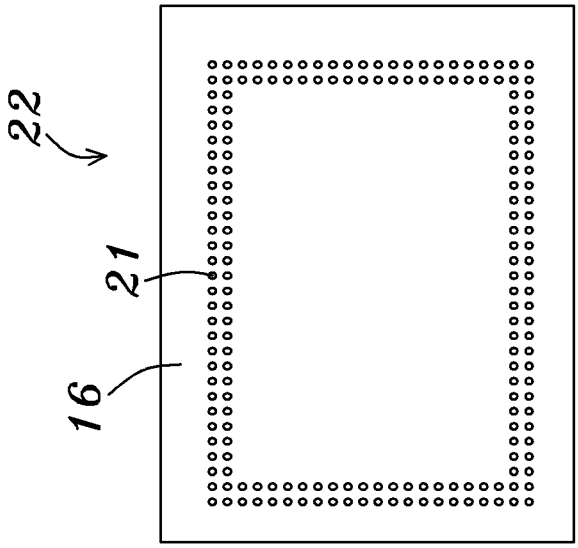

Fig. 6l

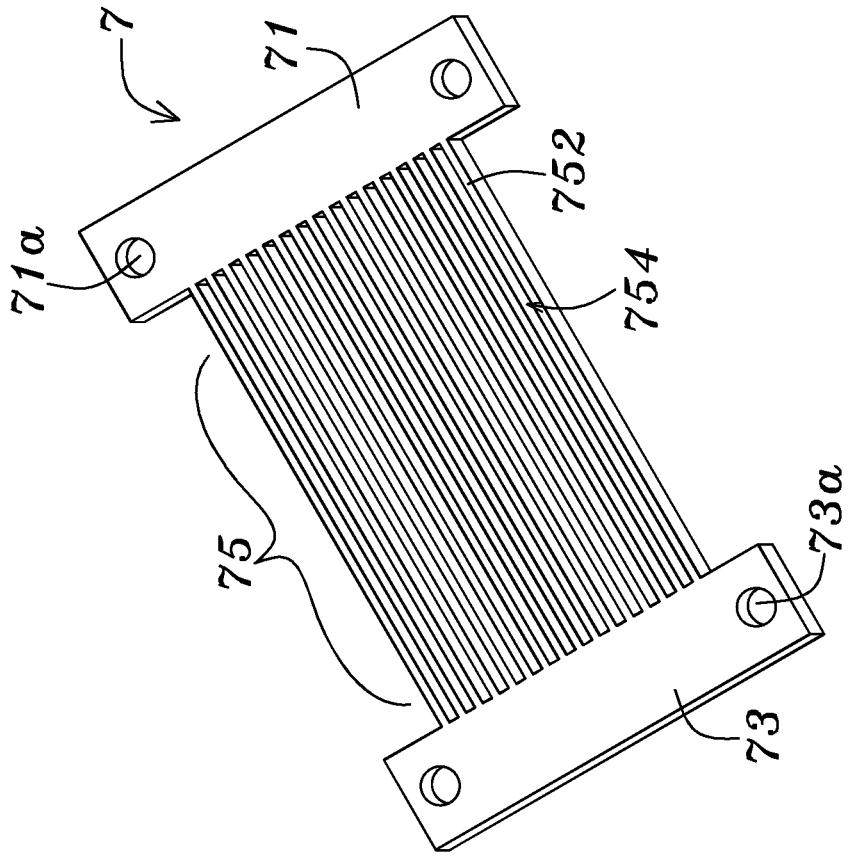

Fig. 7b

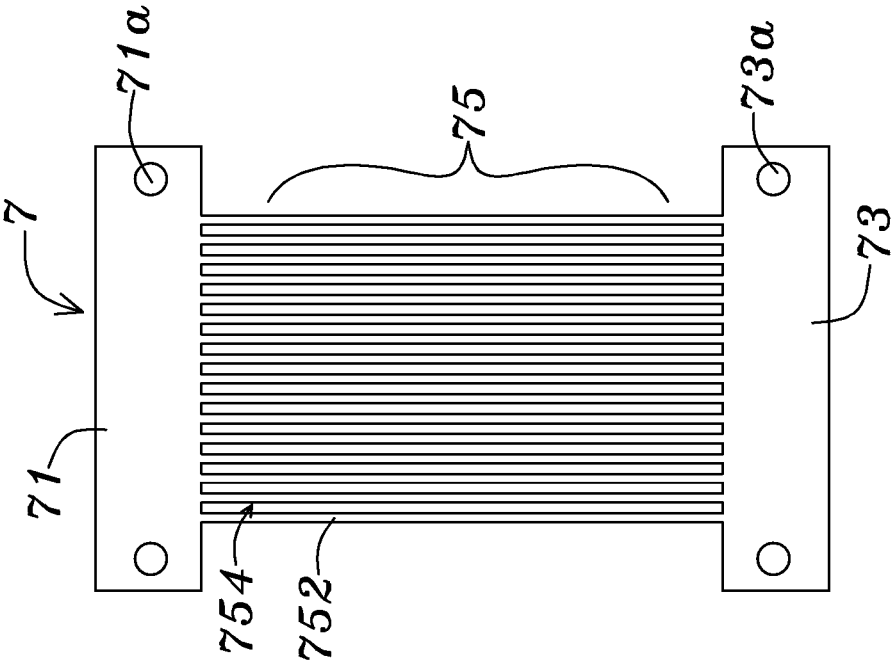

Fig. 7a

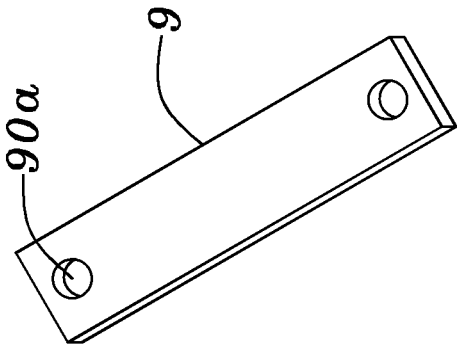

Fig. 7d

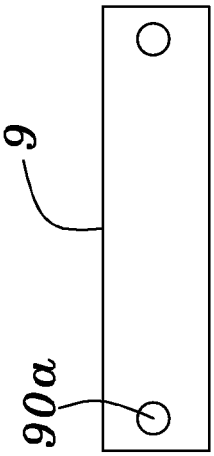

Fig. 7c

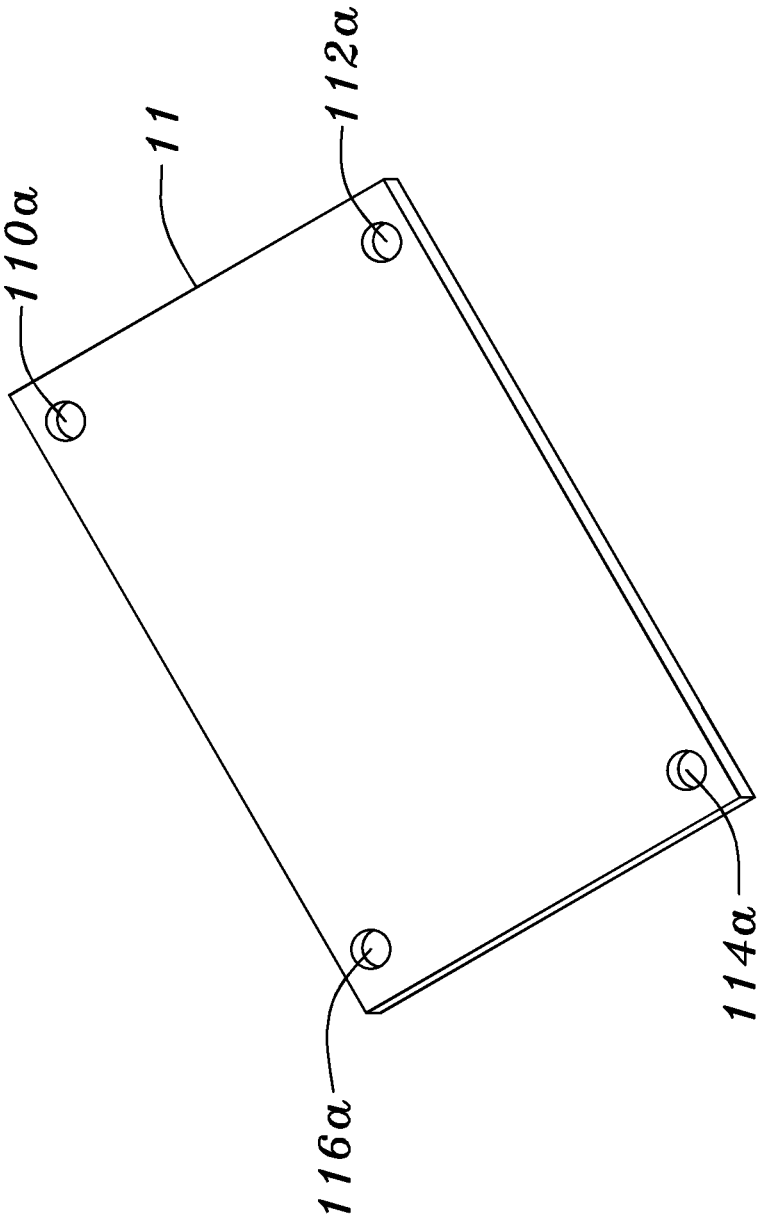

Fig. 7e

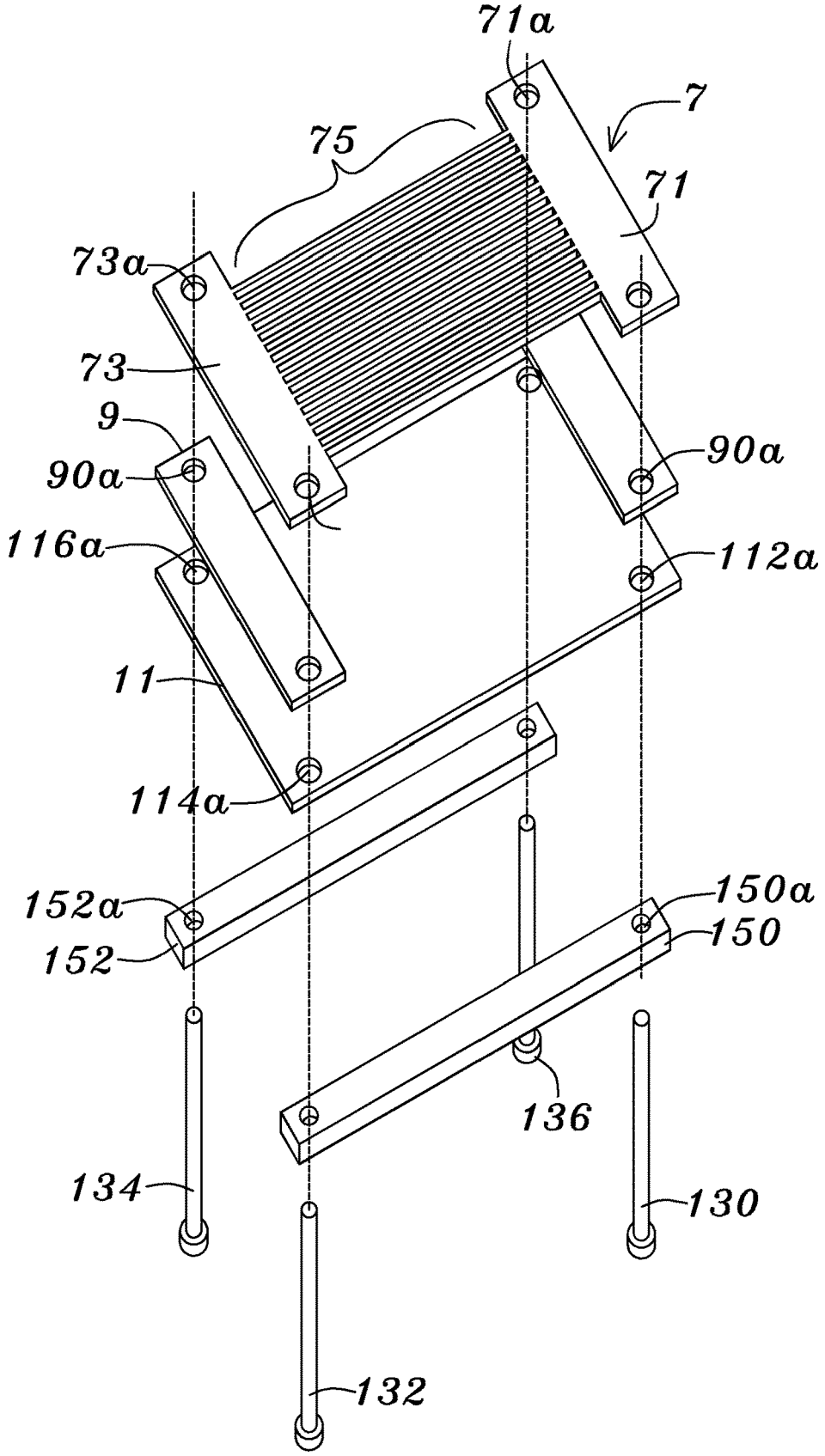
71a
7
75
71
73a
73
9
90a
90a
116a
112a
11
114a
152a
150a
152
150
136
134
130
132

Fig. 7f

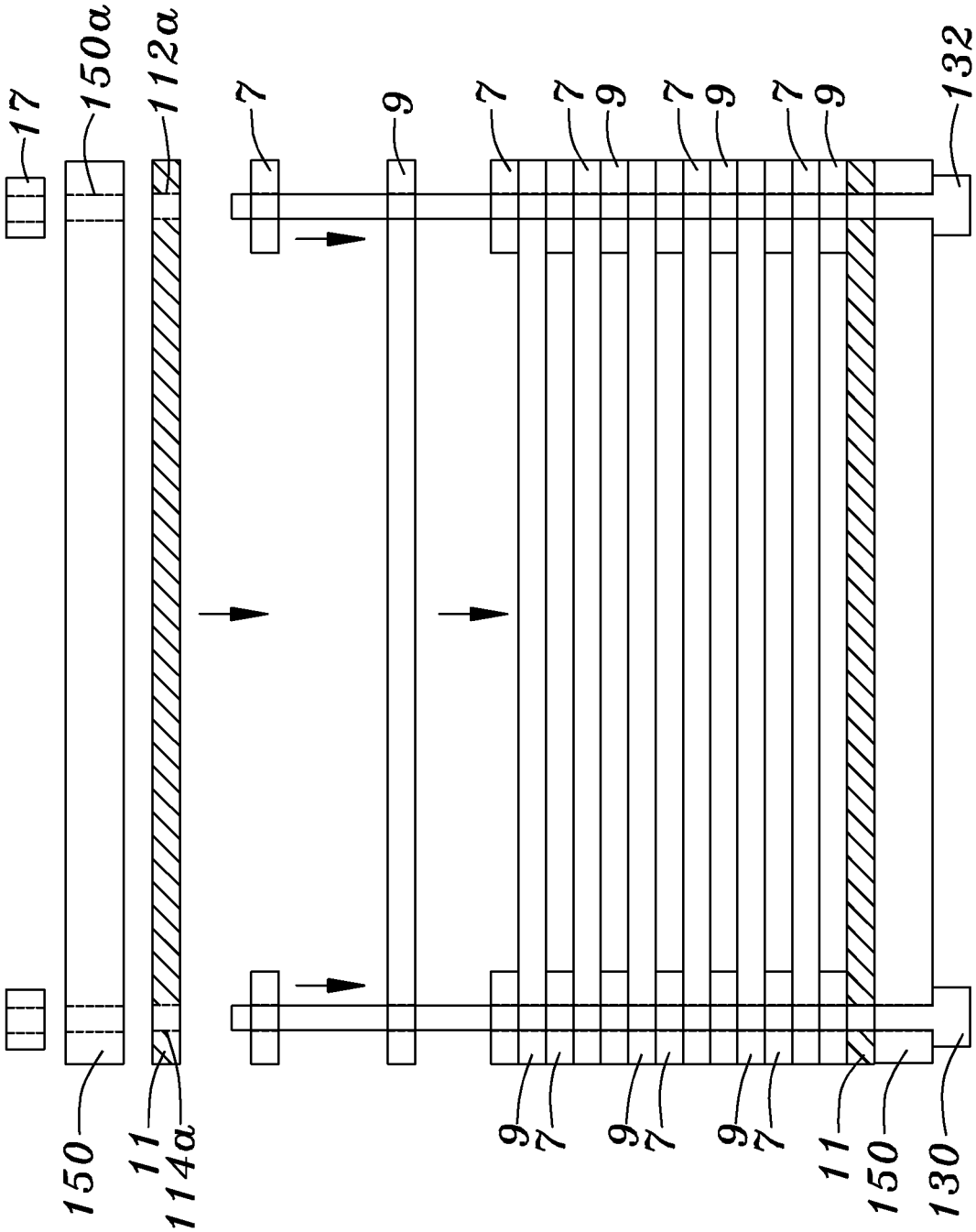

Fig. 7g

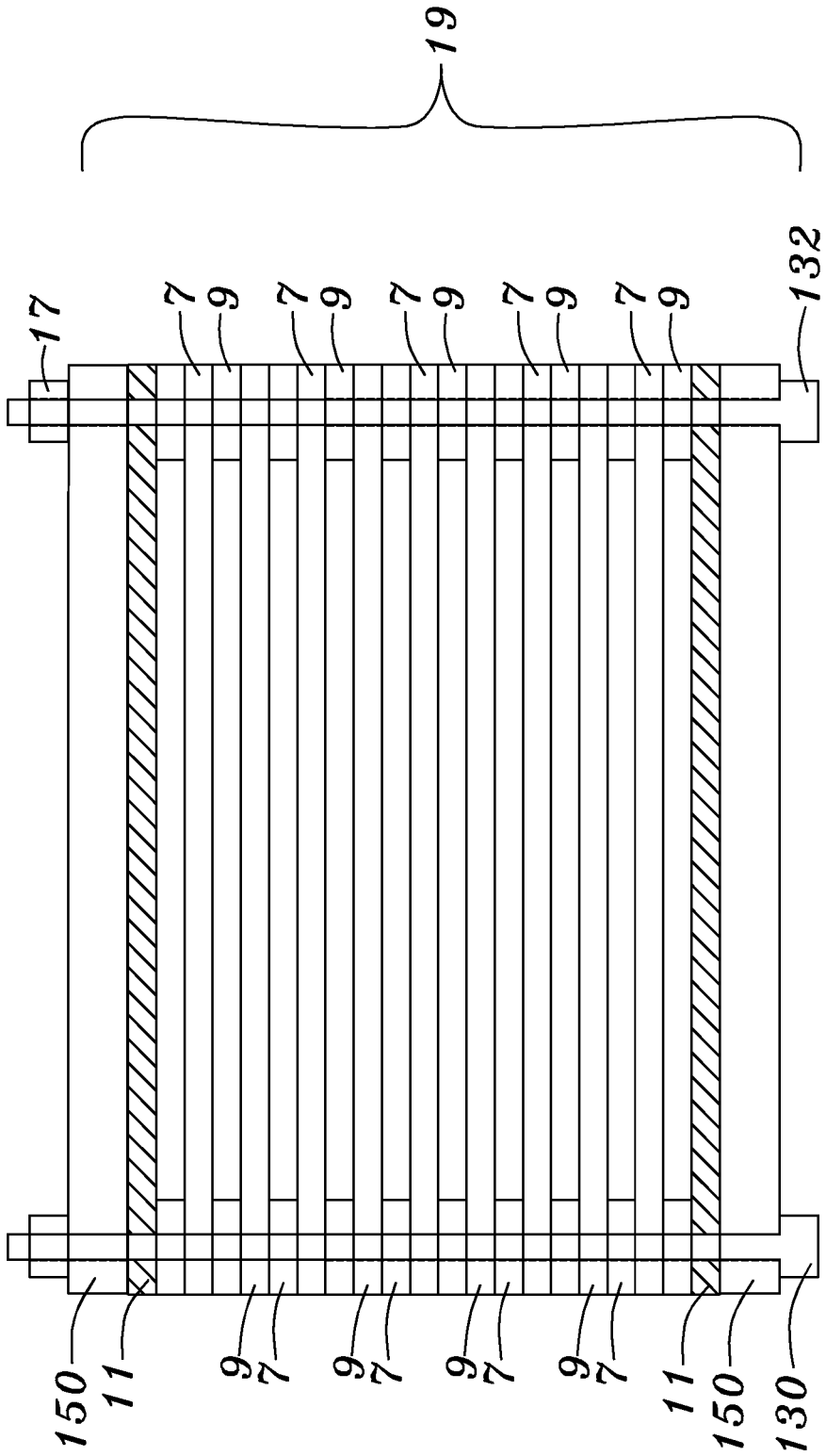

Fig. 7h

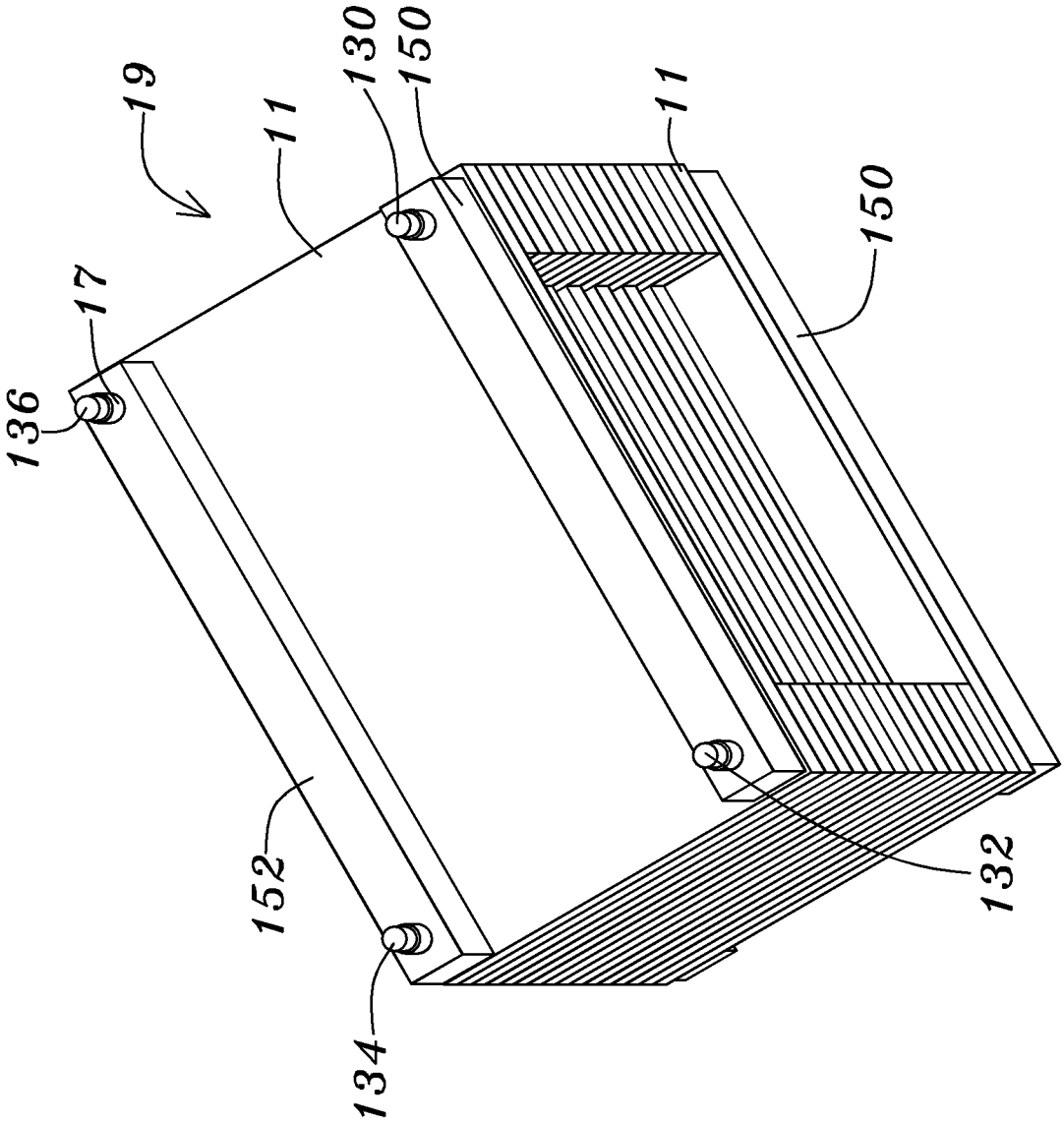

Fig. 7i

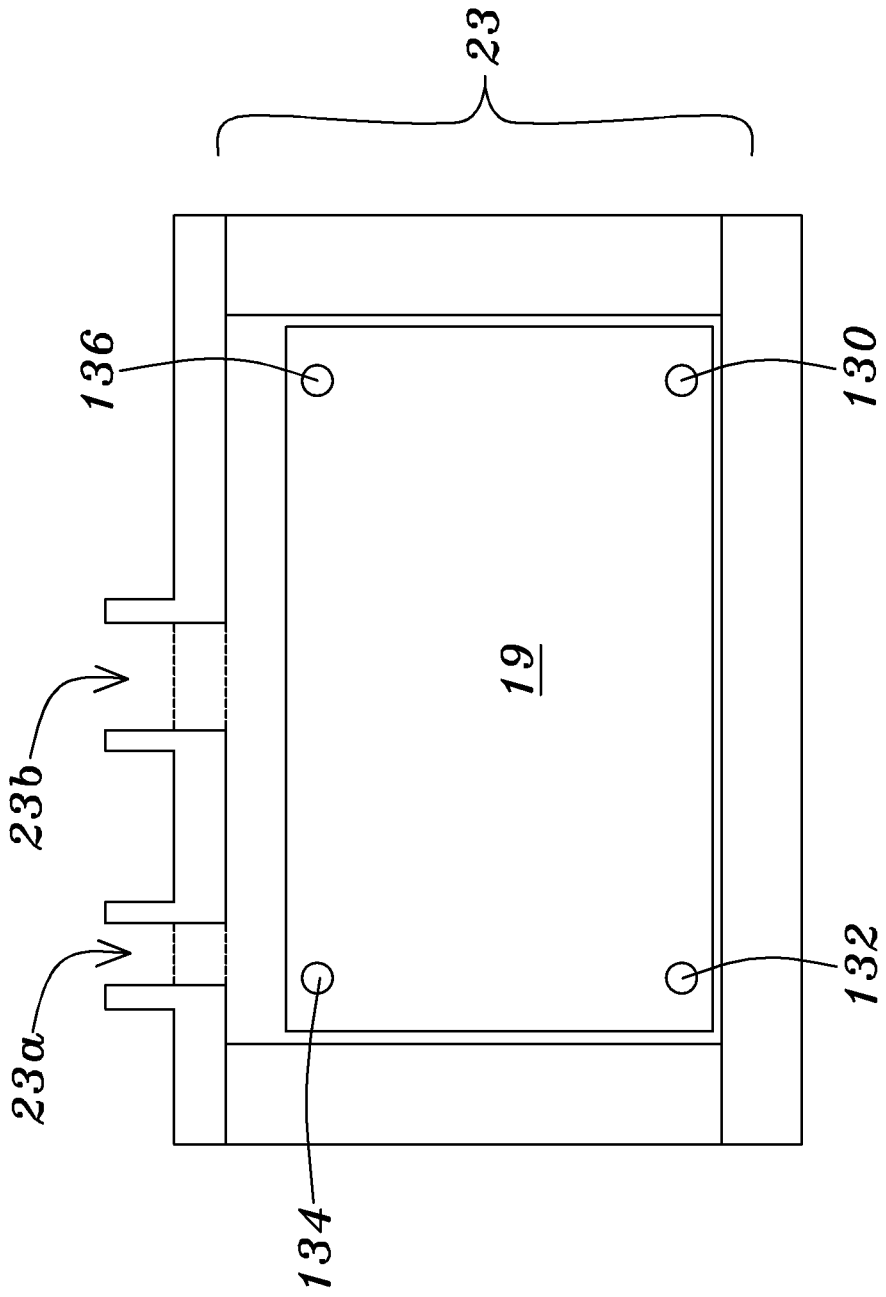

Fig. 7j

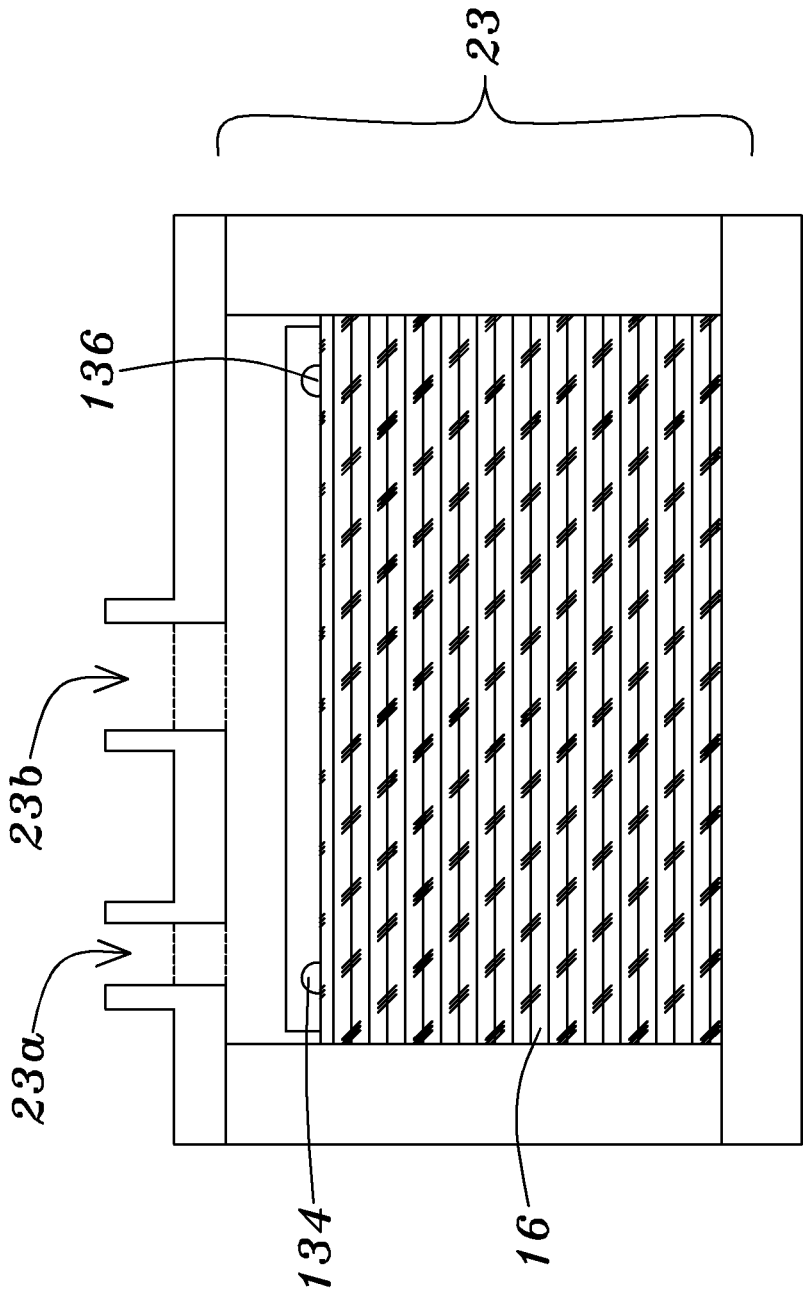

Fig. 7k

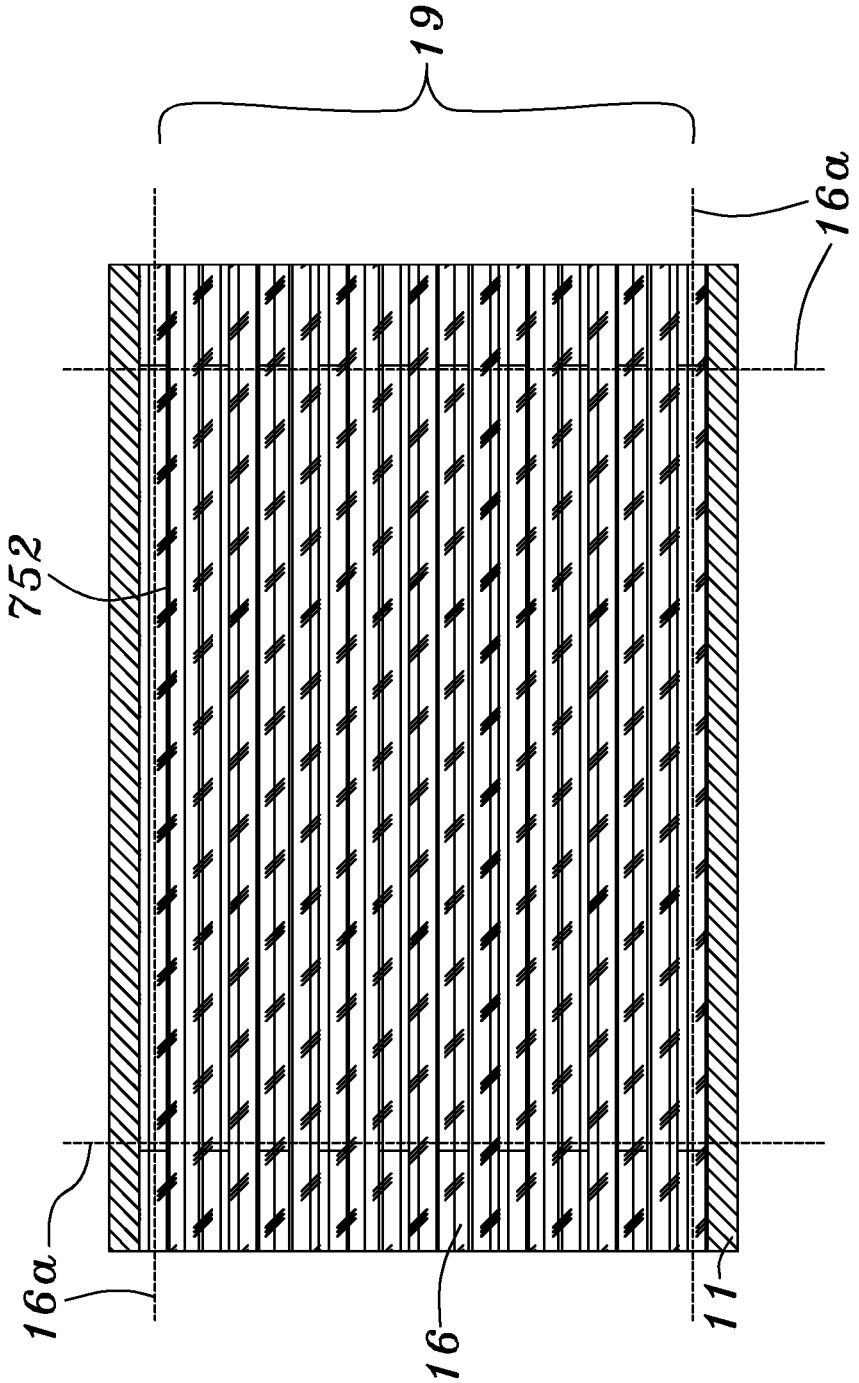

Fig. 71

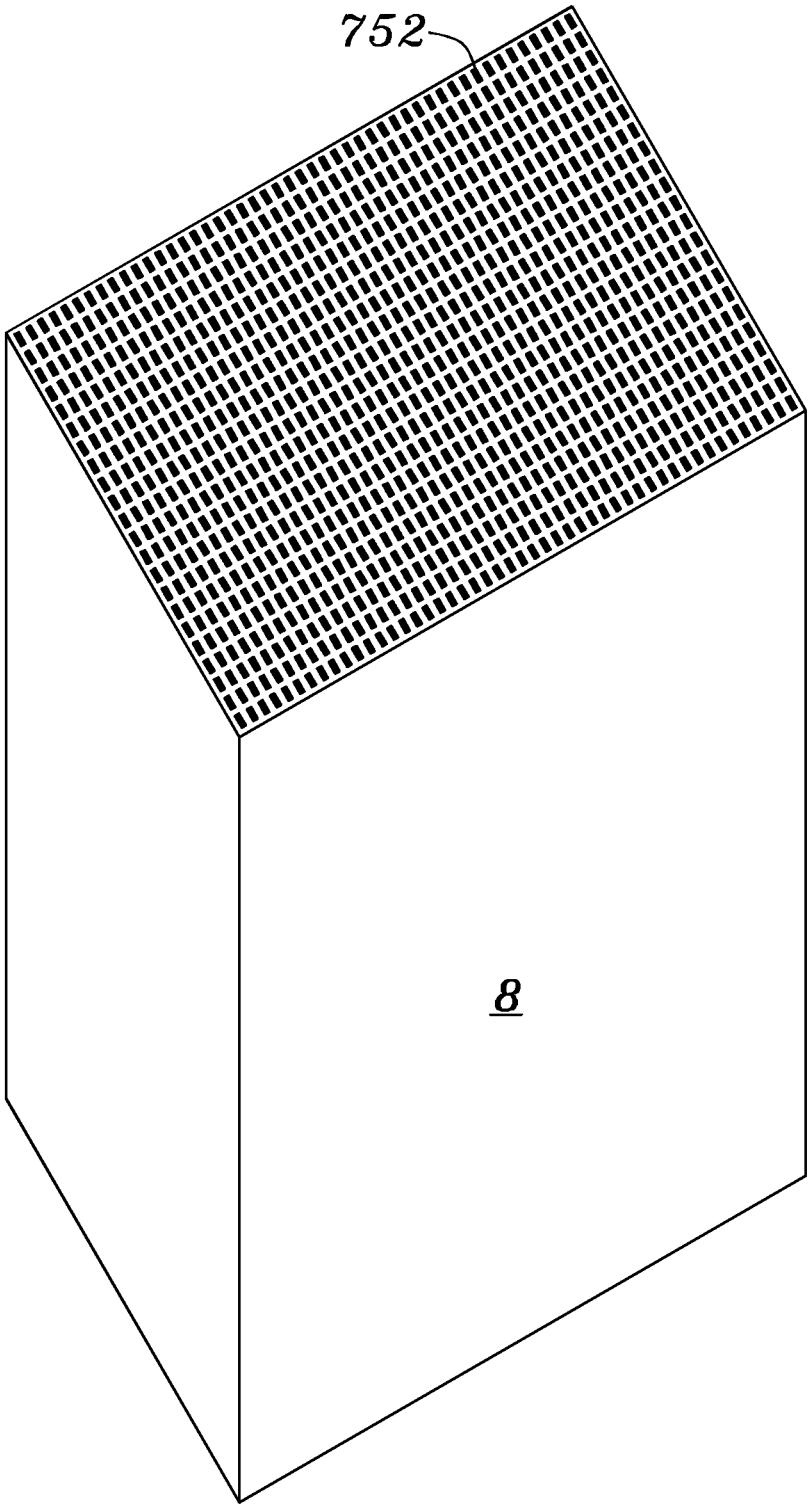

Fig. 7m

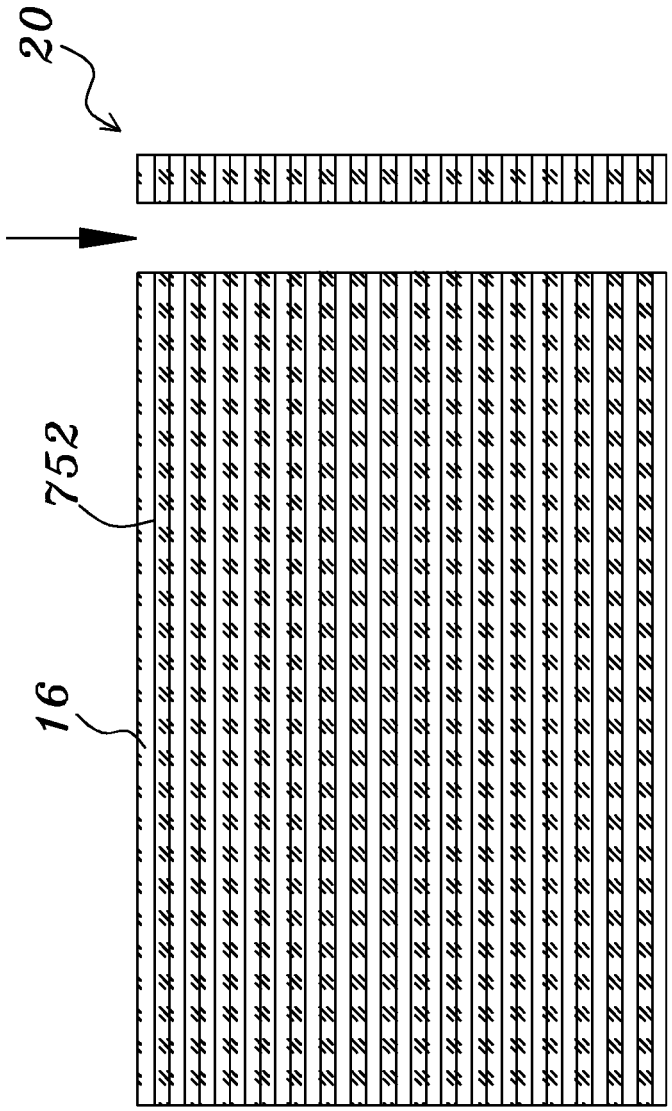

Fig. 7n

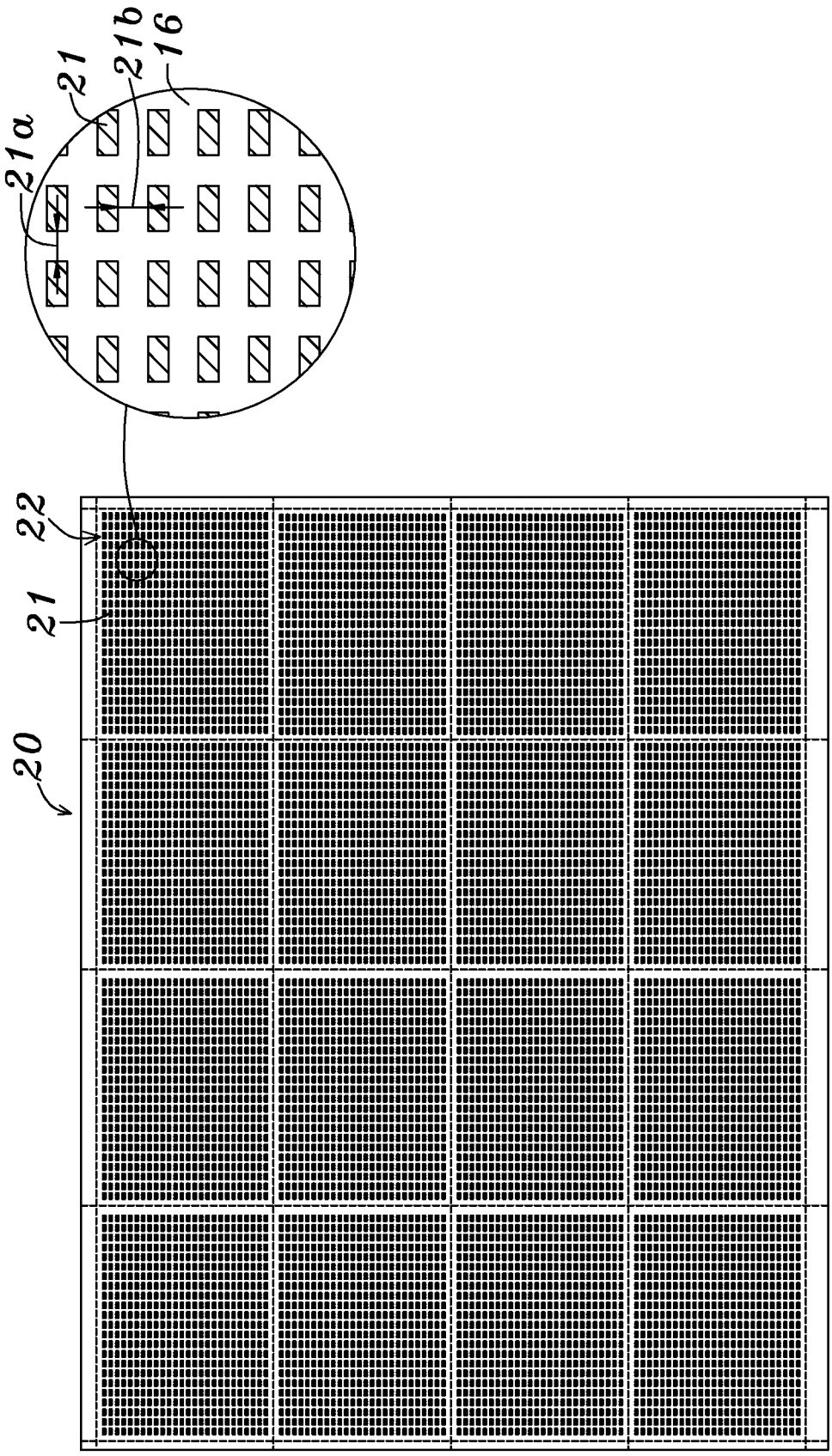

Fig. 7o

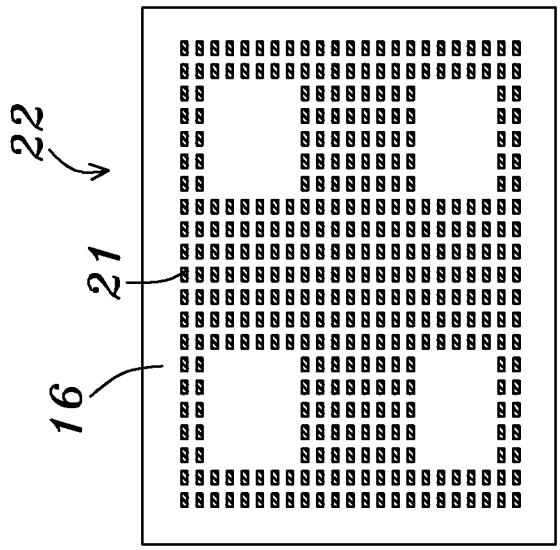

Fig. 7r

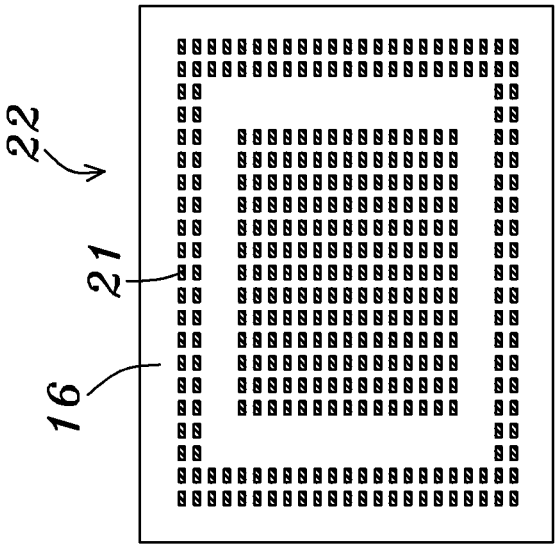

Fig. 7q

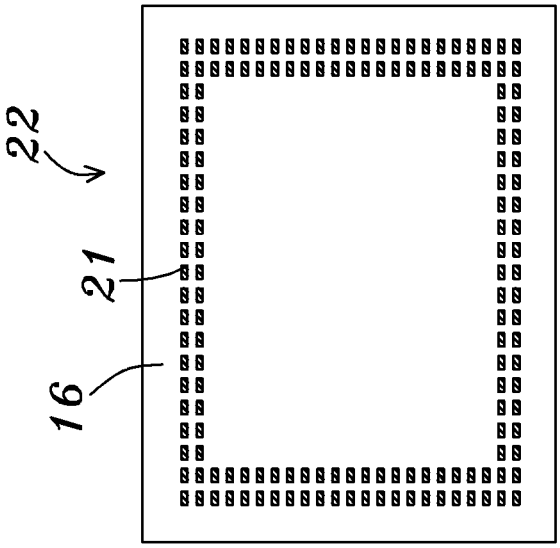

Fig. 7p

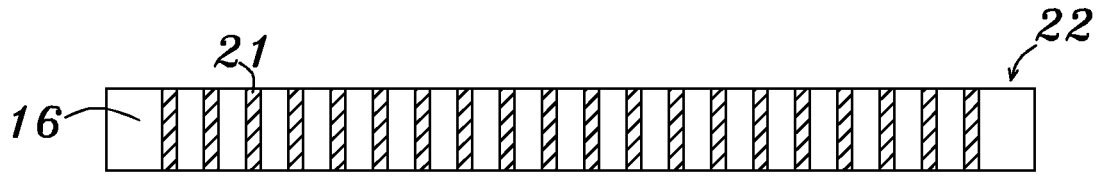

Fig. 8a

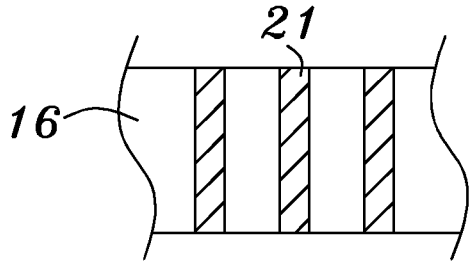

Fig. 8b

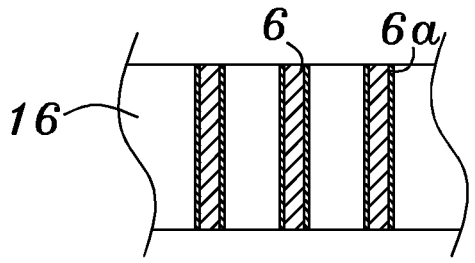

Fig. 8c

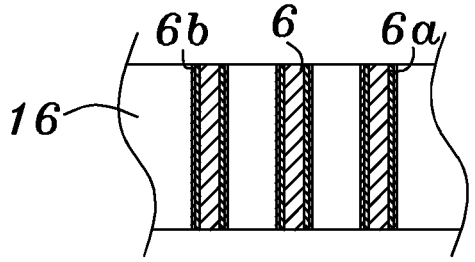

Fig. 8d

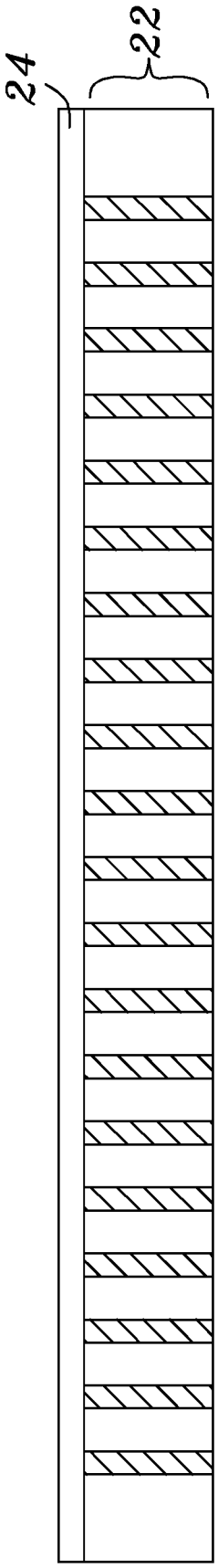

Fig. 9a

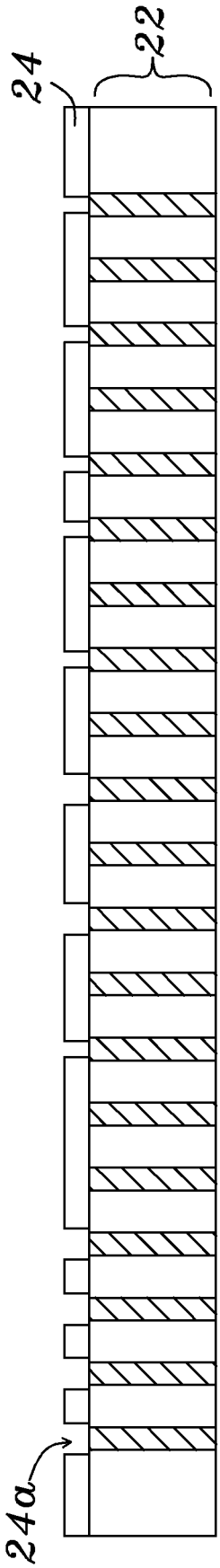

Fig. 9b

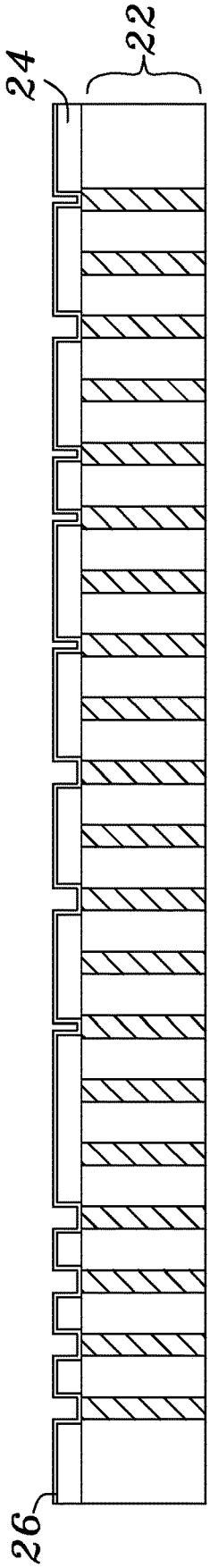

Fig. 9c

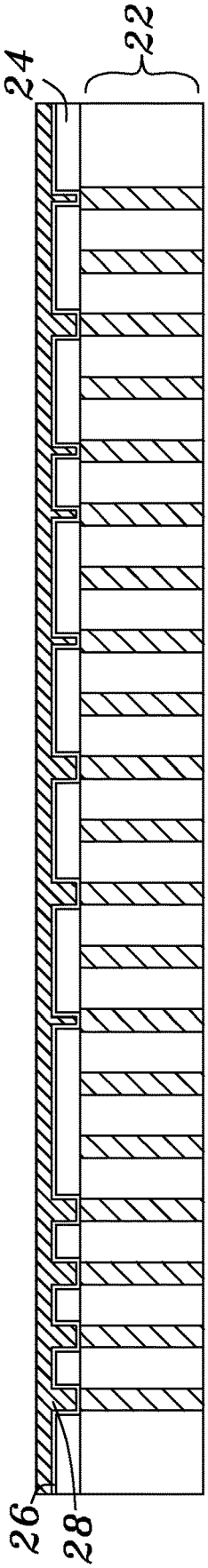

Fig. 9d

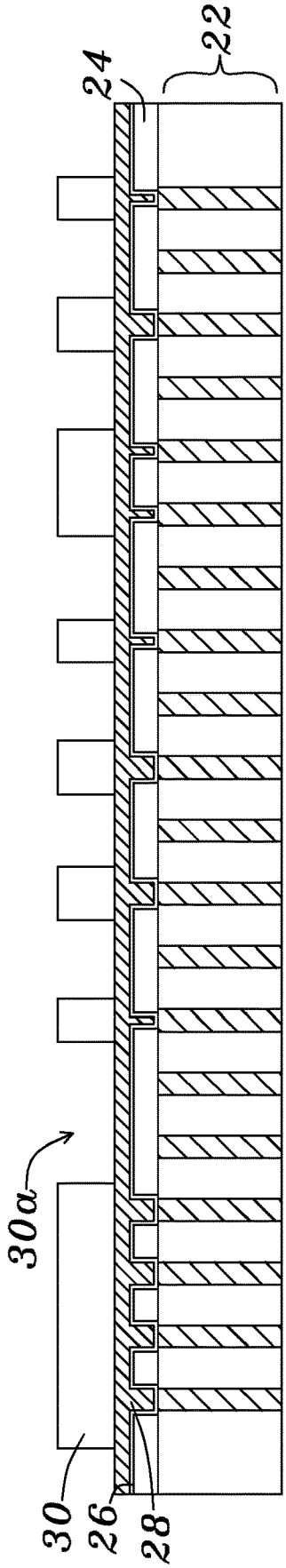

Fig. 9e

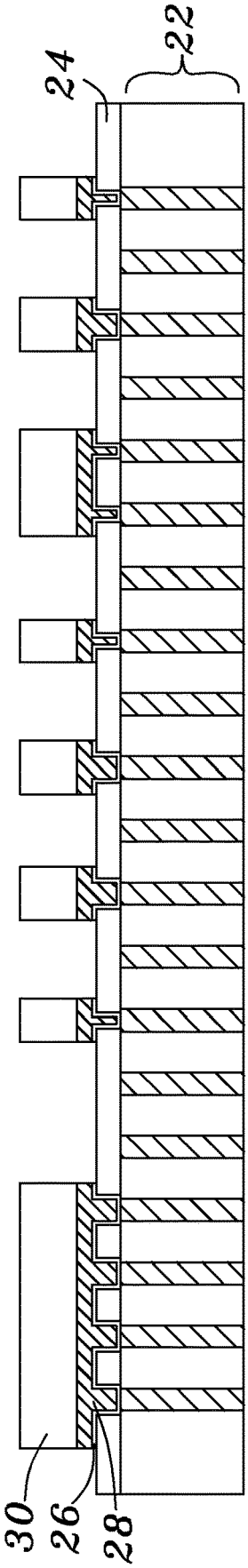

Fig. 9f

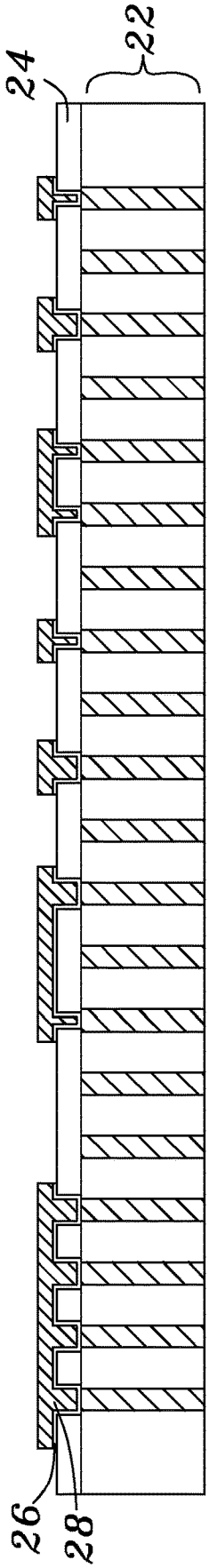

Fig. 9g

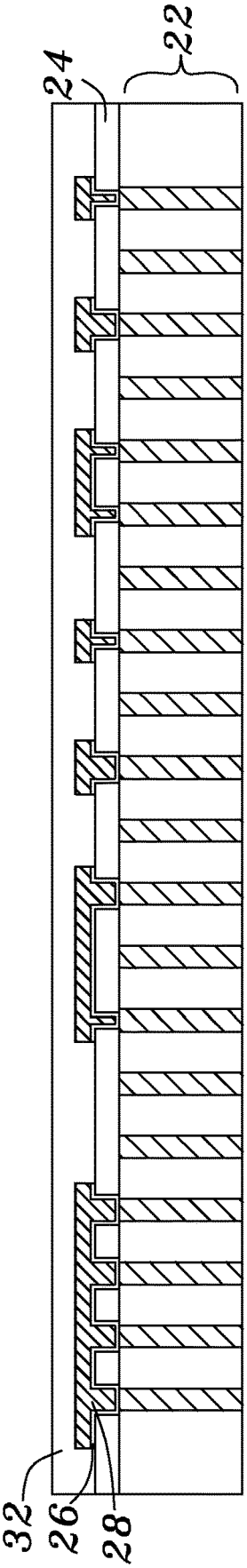

Fig. 9h

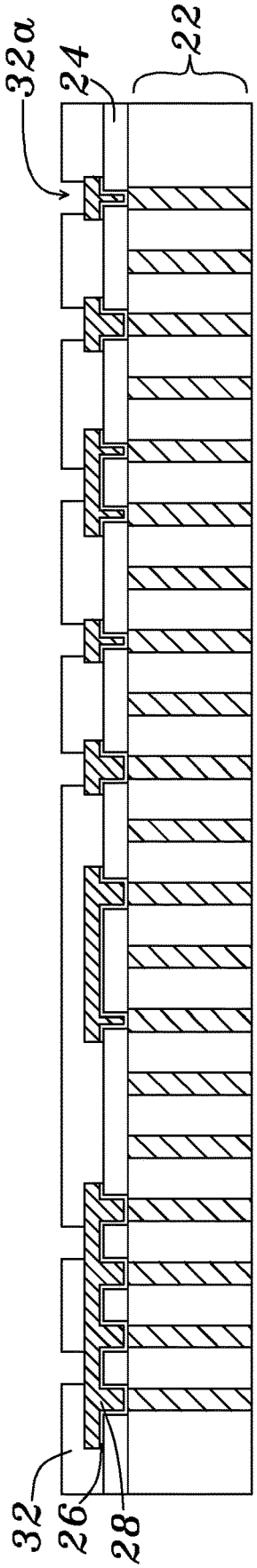

Fig. 9i

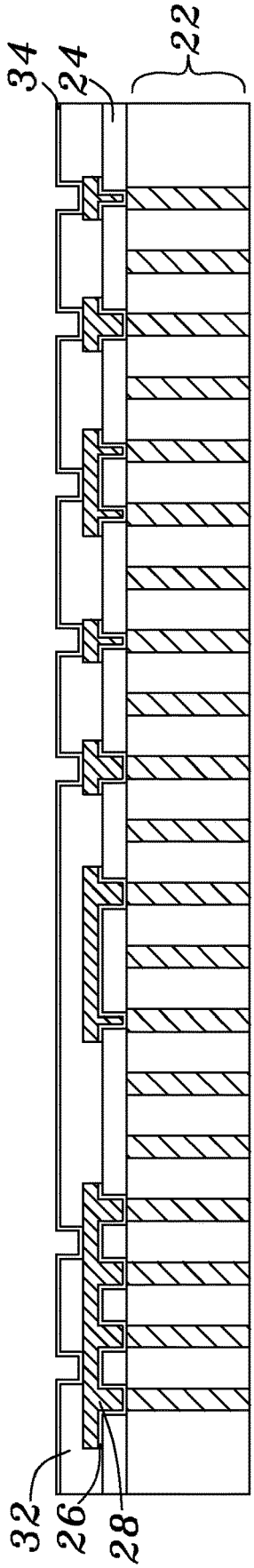

Fig. 9j

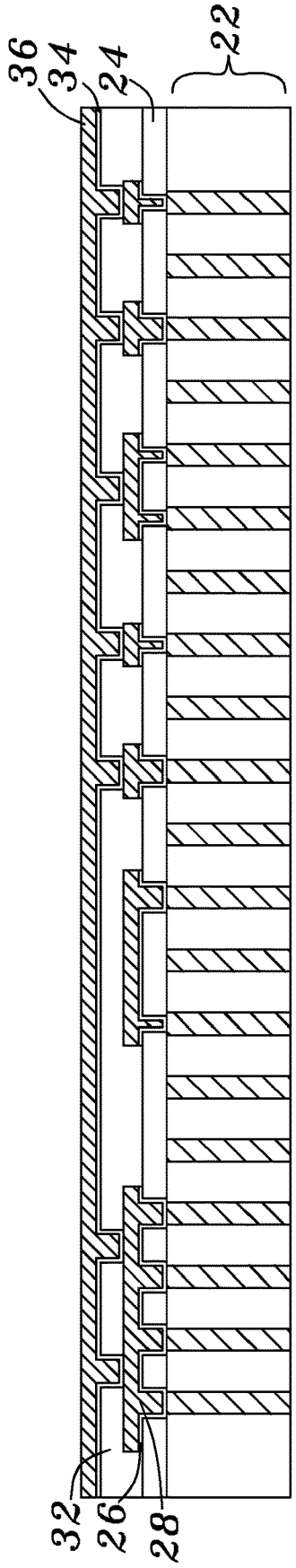

Fig. 9k

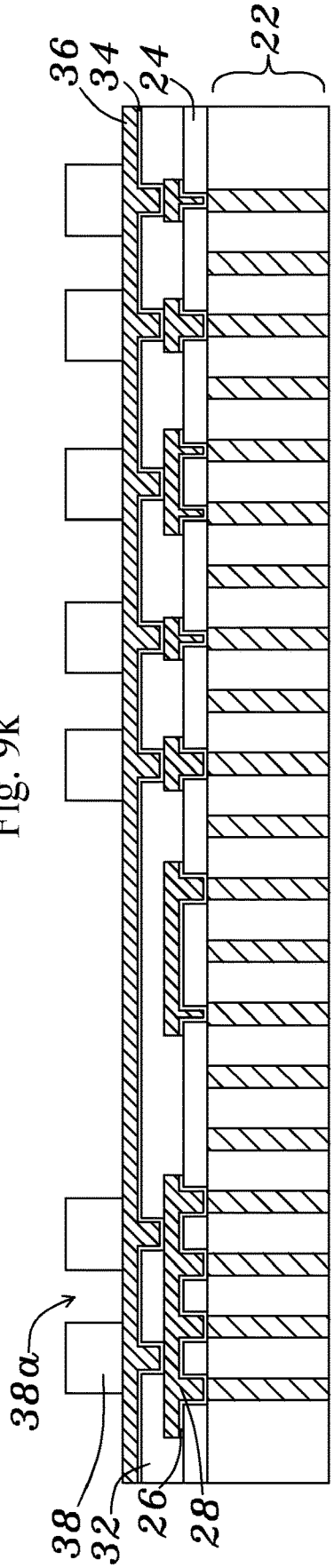

Fig. 9l

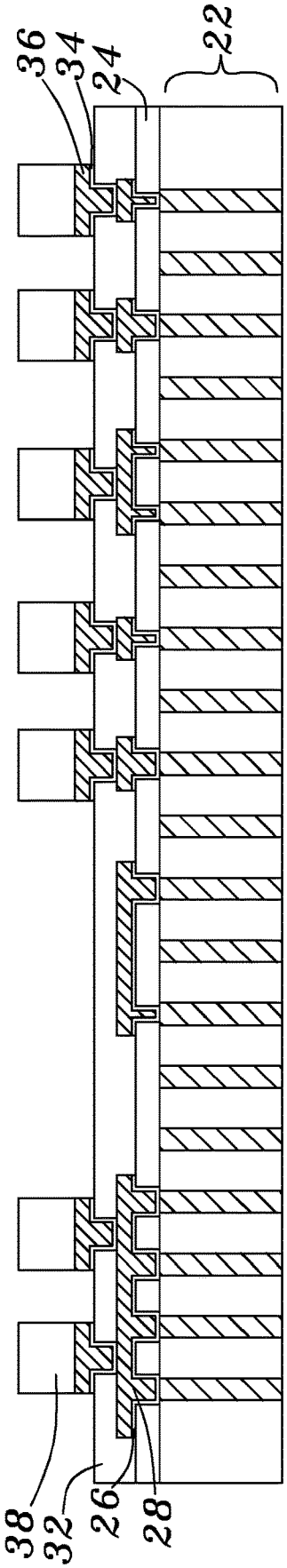

Fig. 9m

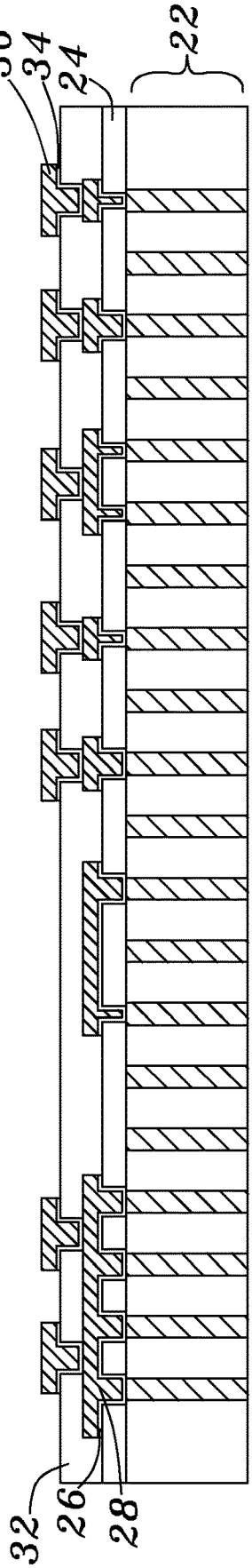

Fig. 9n

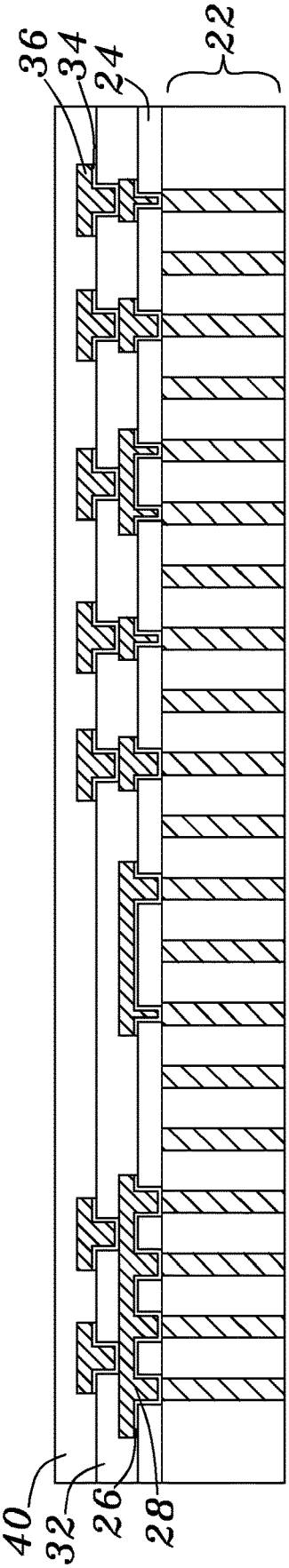

Fig. 9o

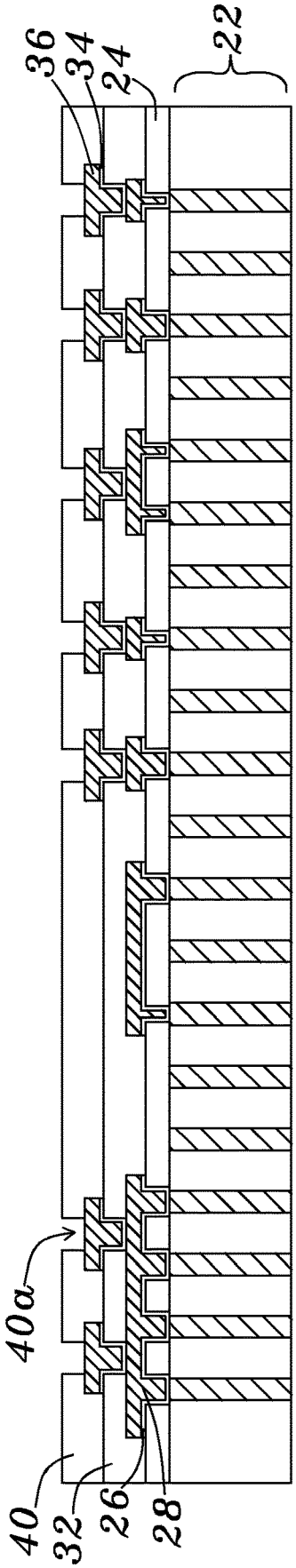

Fig. 9p

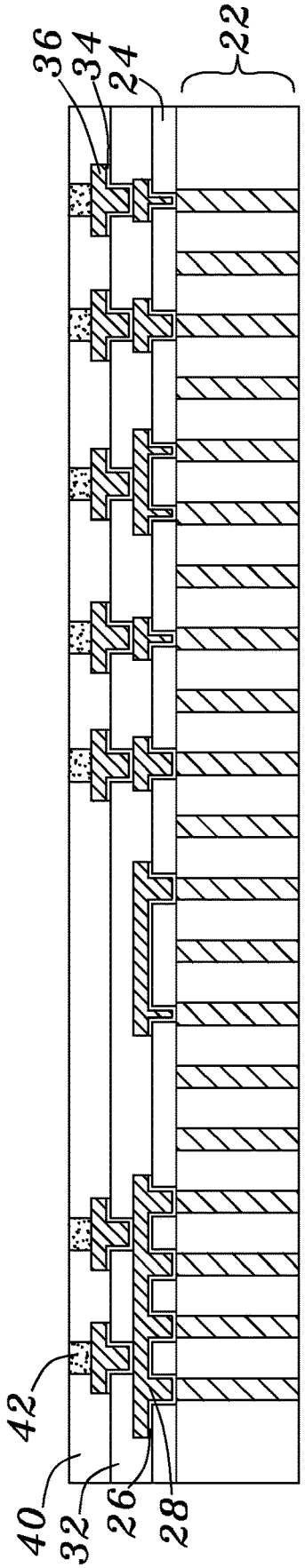
36
34
24
22
42
40
32
26
28

Fig. 9q

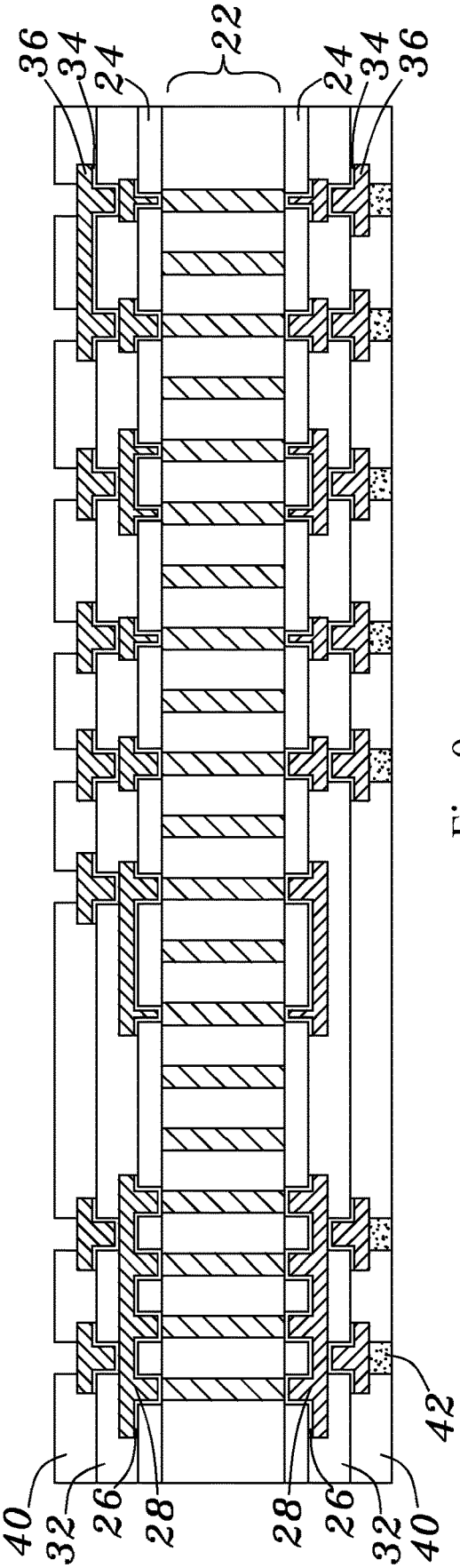
36
34
24
22
24
34
36
42
40
32
26
28
28
26
32
40

Fig. 9r

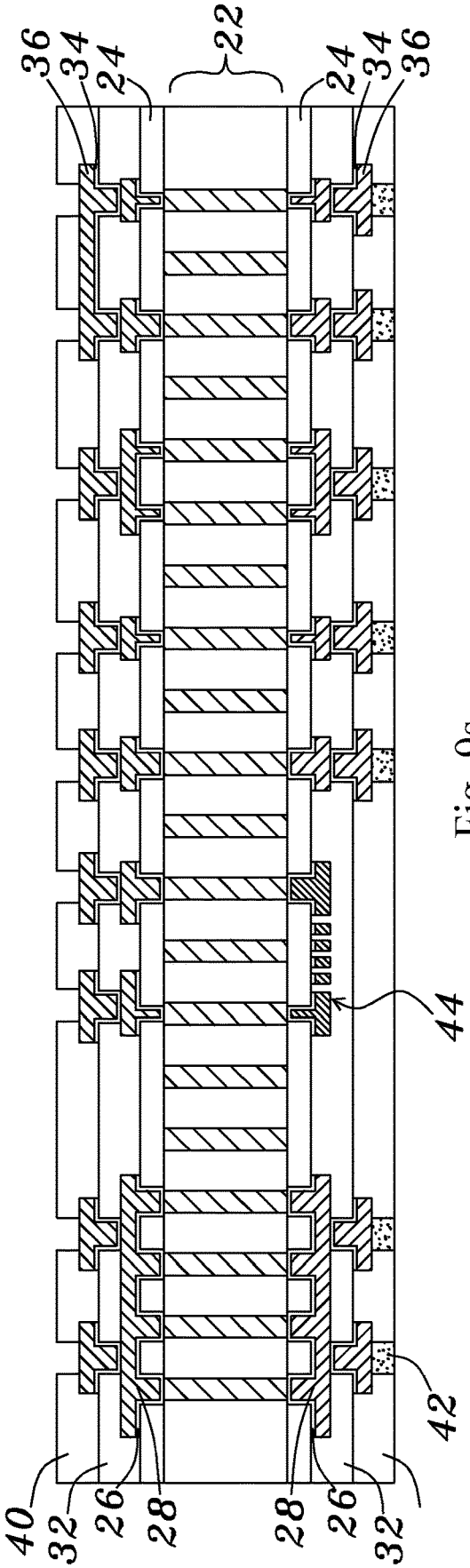

Fig. 9s

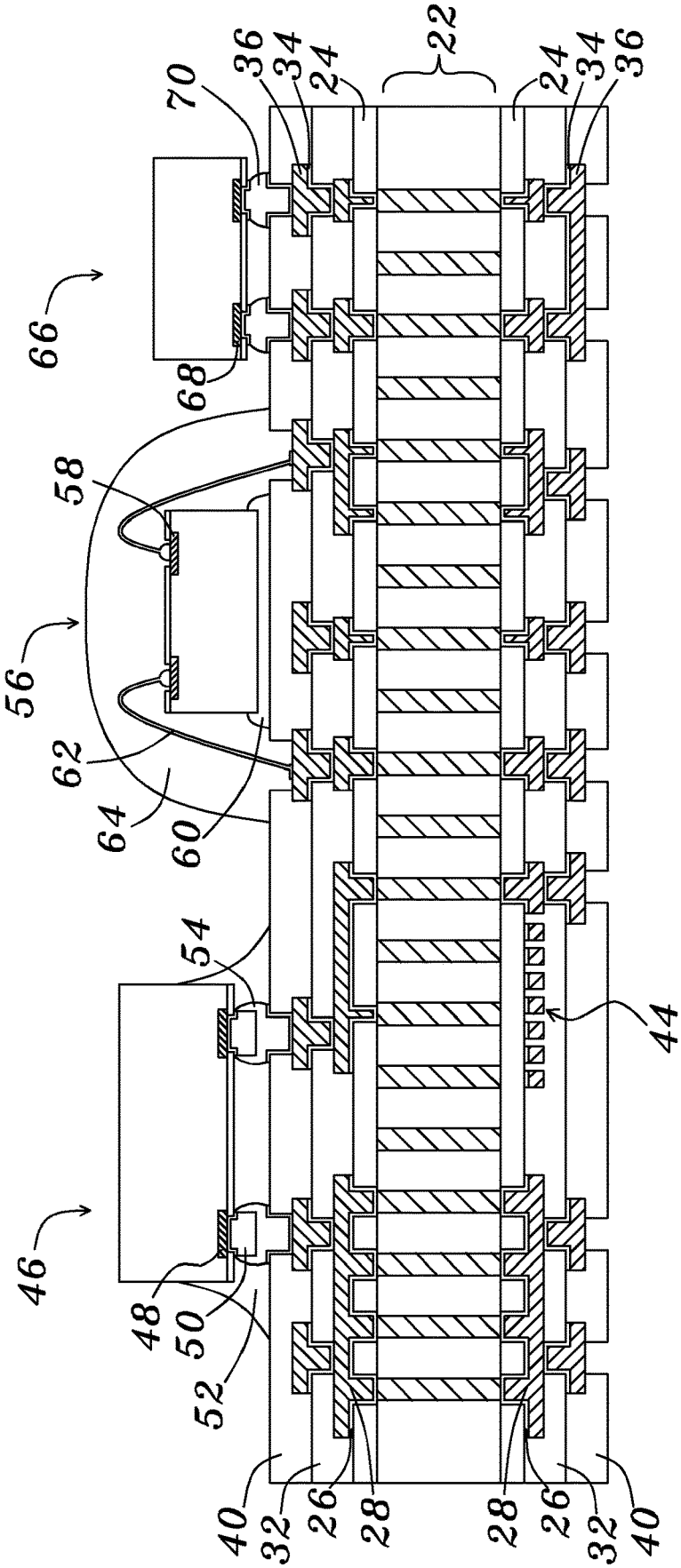
70
36
34
24
22
24
34
36
66
68
58
56
62
64
60
54
44
46
48
50
52
40
32
26
28
28
26
32
40

Fig. 9t

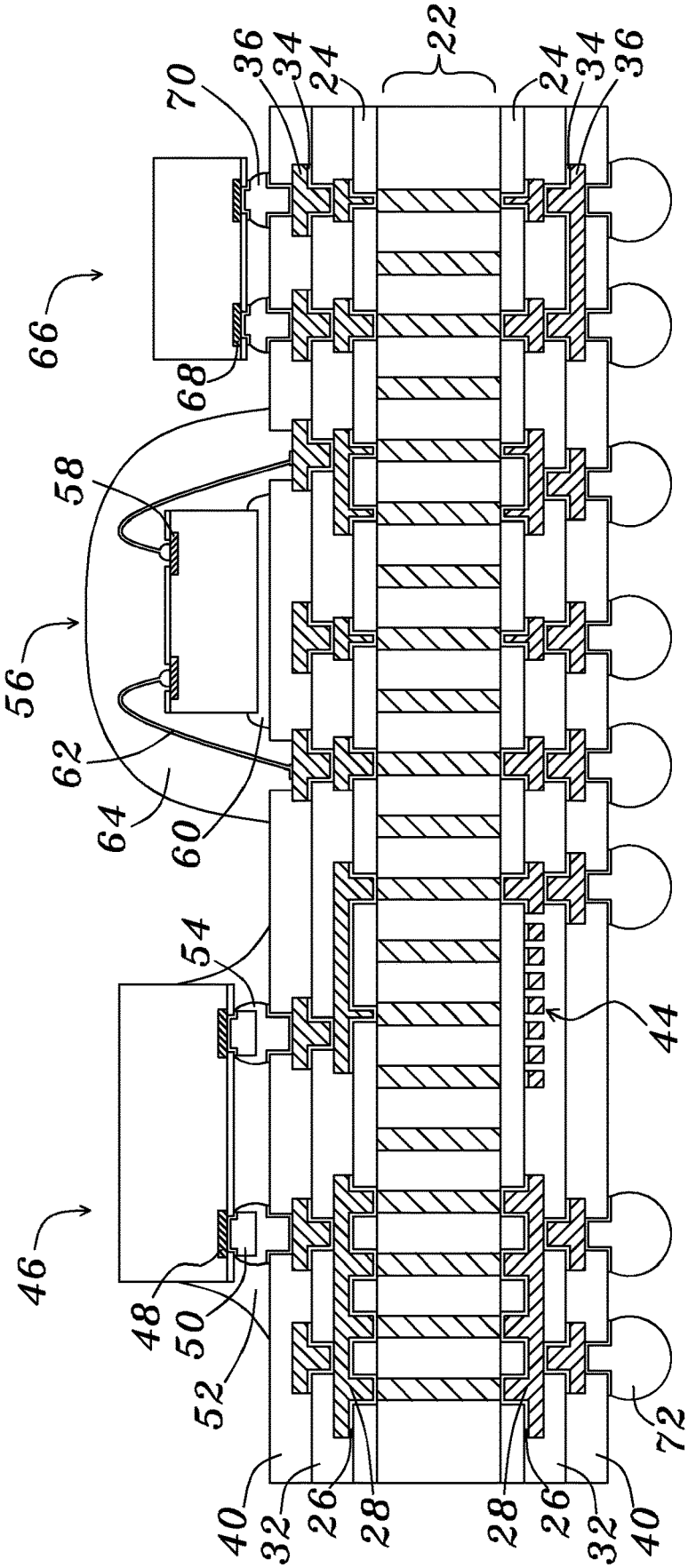
70
36
34
24
22
24
34
36
66
68
58
56
62
64
60
54
44
46
48
50
52
72
40
32
26
28
28
26
32
40

Fig. 9u

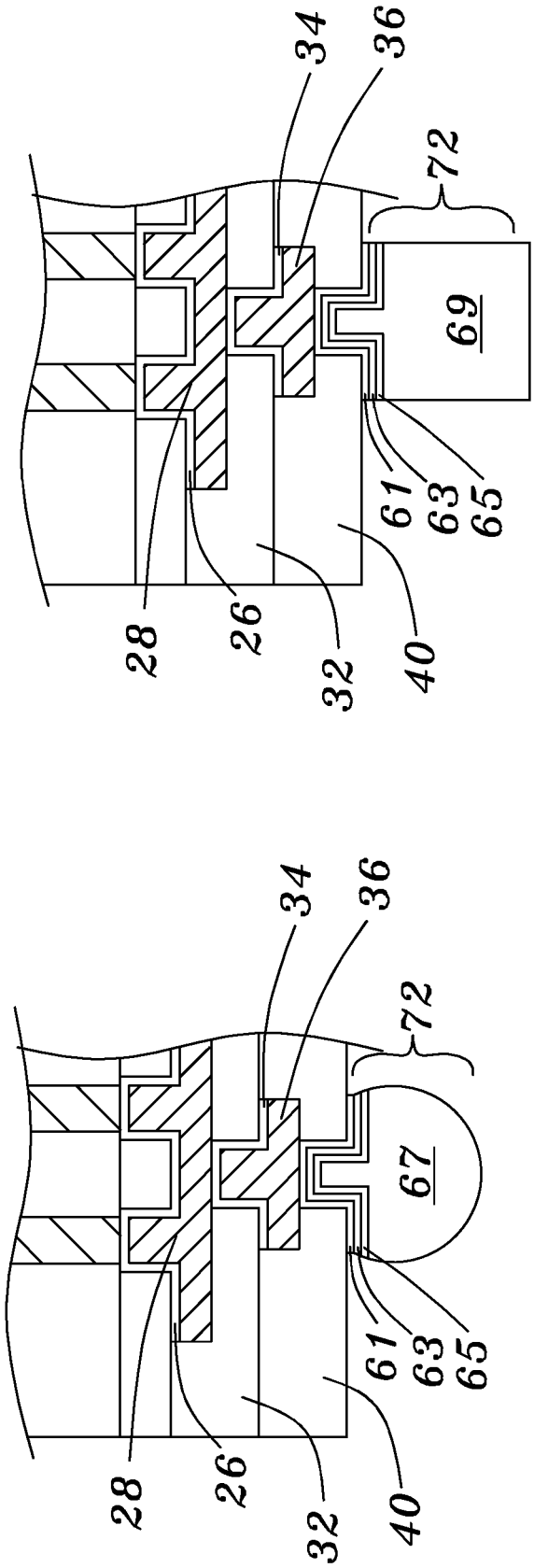

Fig. 9v

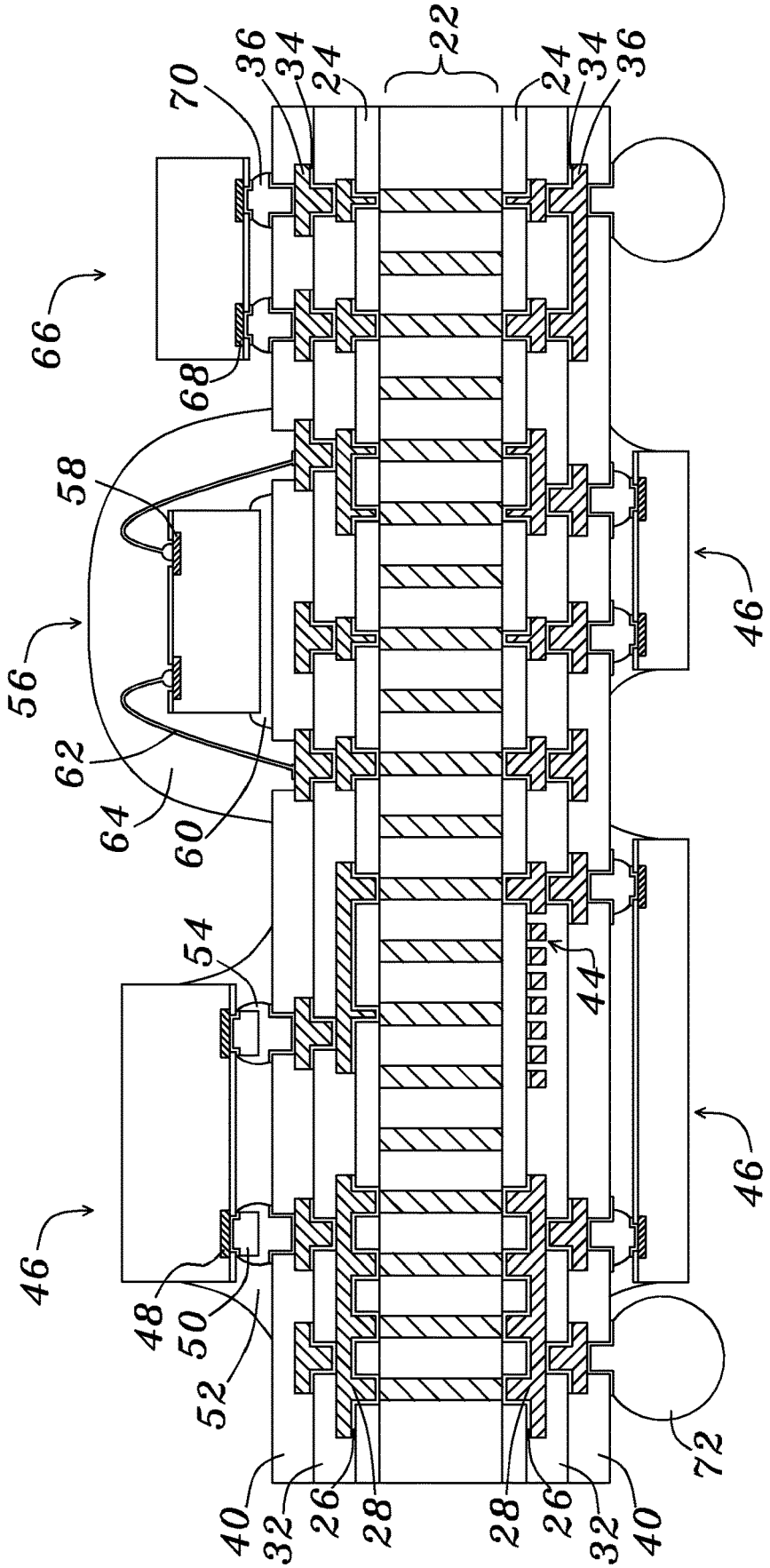
70
36
34
24
22
24
34
36
66
68
58
56
62
64
60
54
44
46
46
46
48
50
52
40
32
26
28
28
26
32
40
72

Fig. 9w

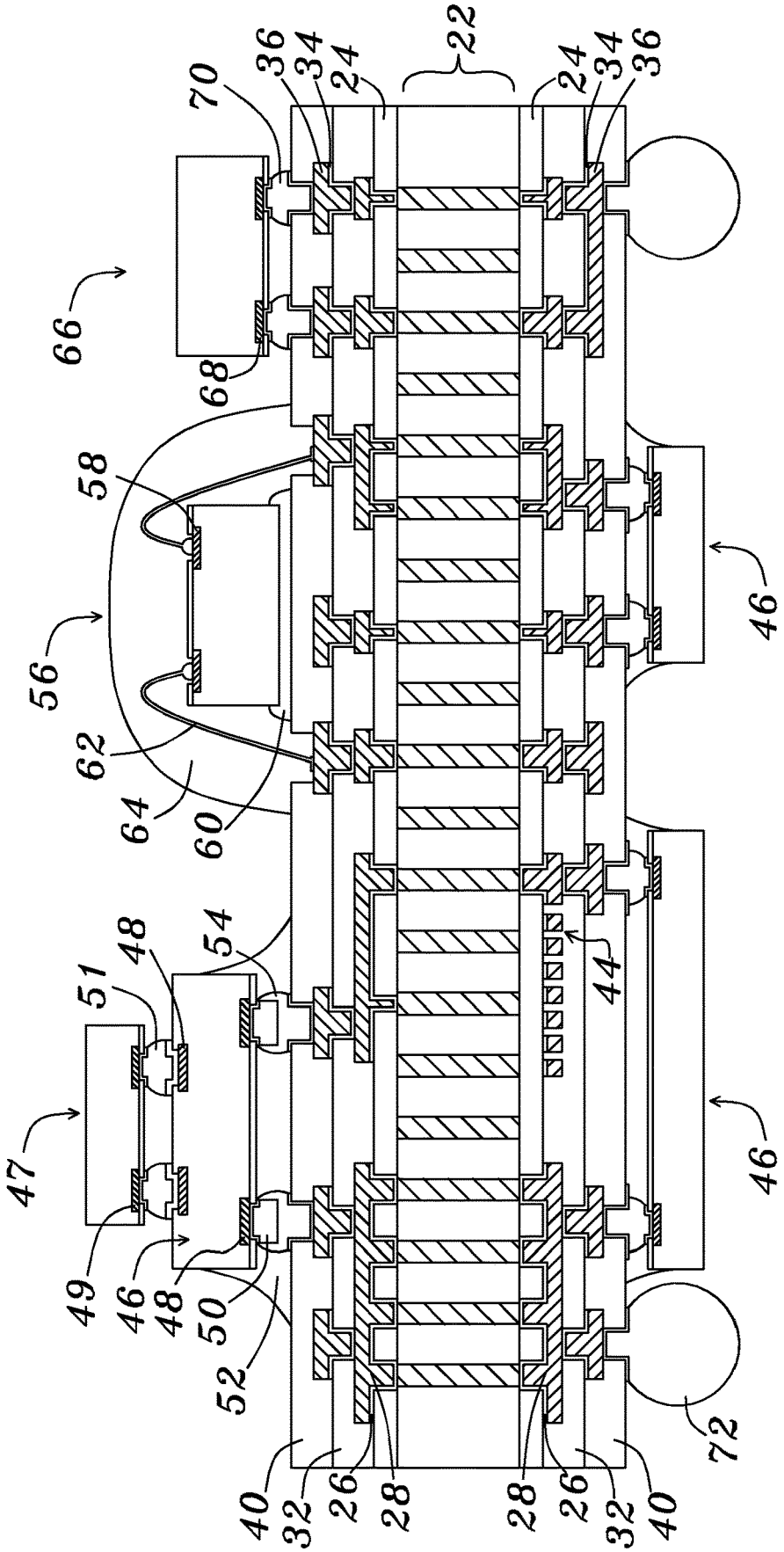
22
24
34
36
70
66
68
58
56
62
64
60
46
44
54
48
51
47
49
50
52
72
40
32
26
28

Fig. 9x

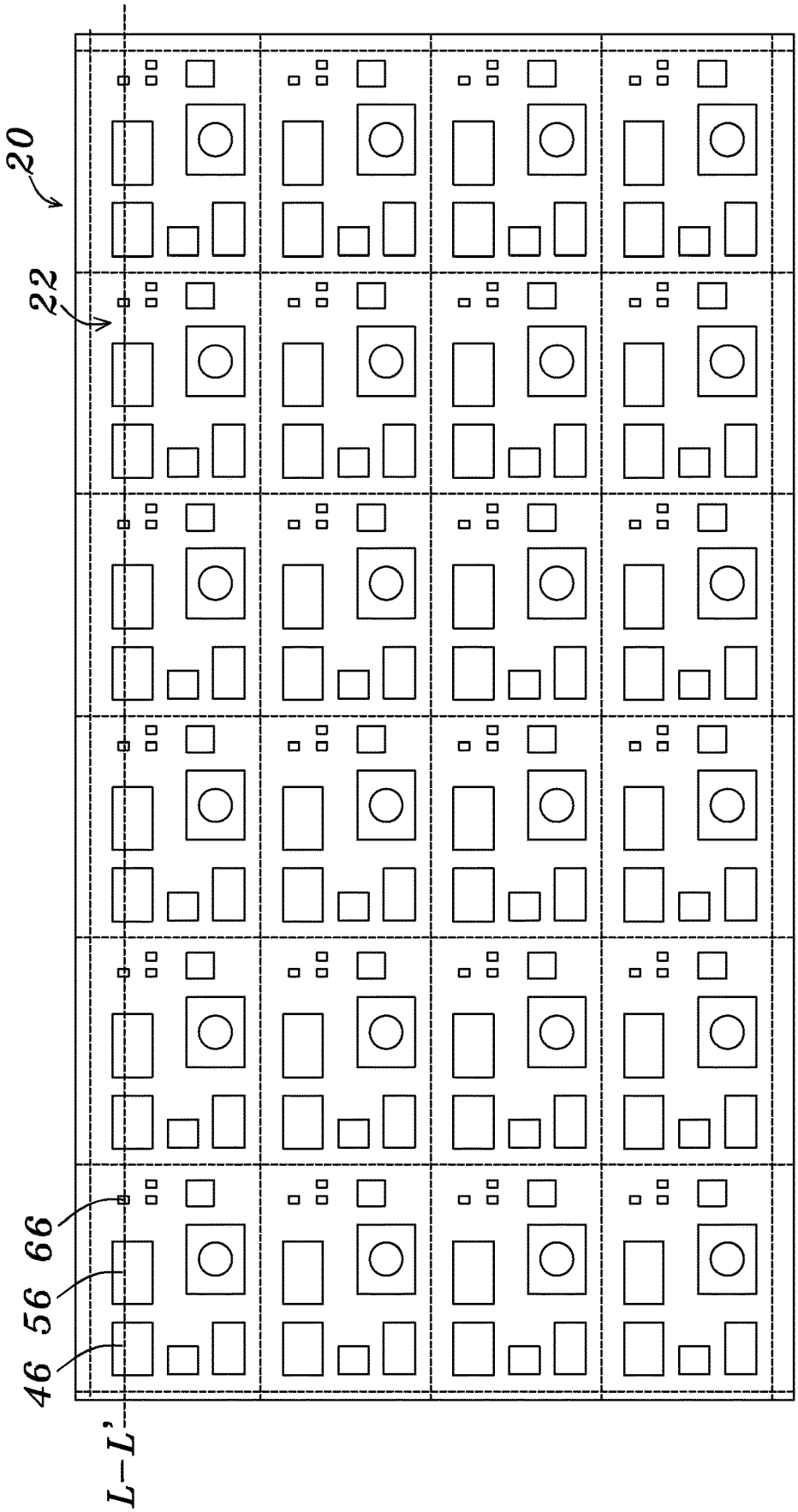

Fig. 9y

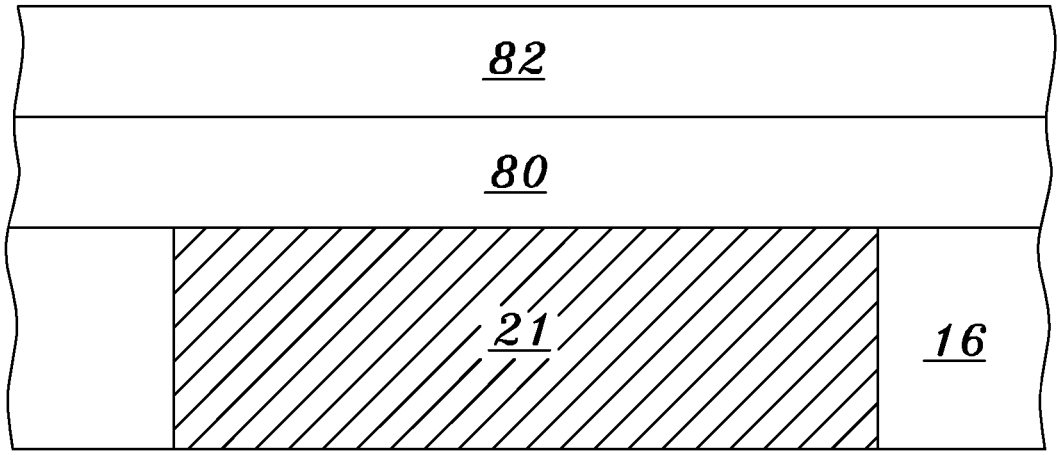

Fig. 10a

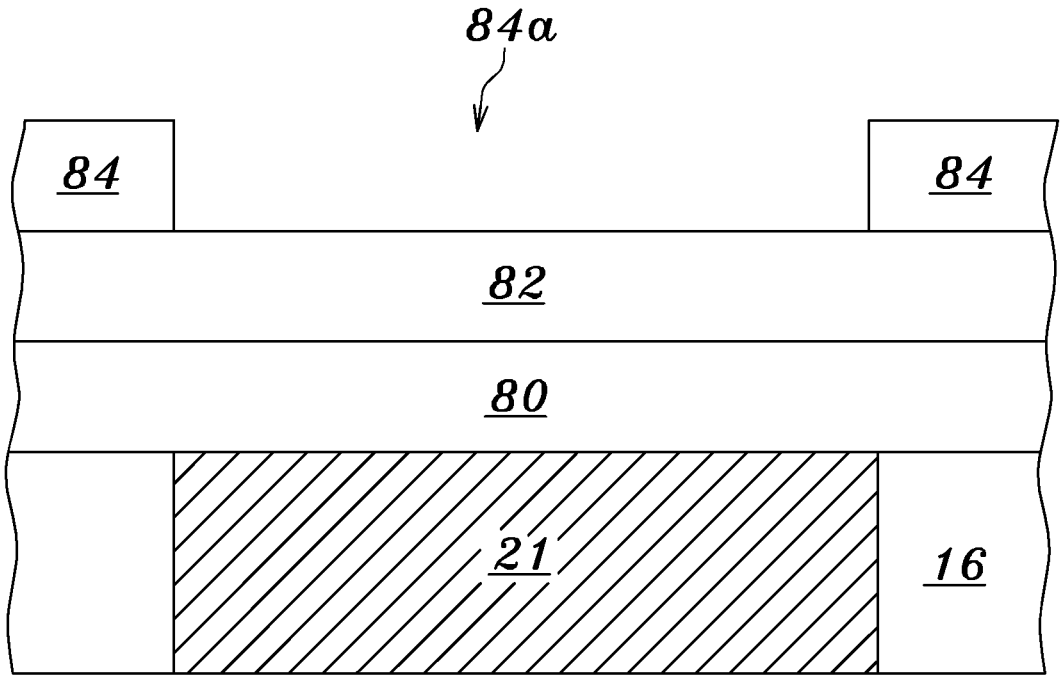

Fig. 10b

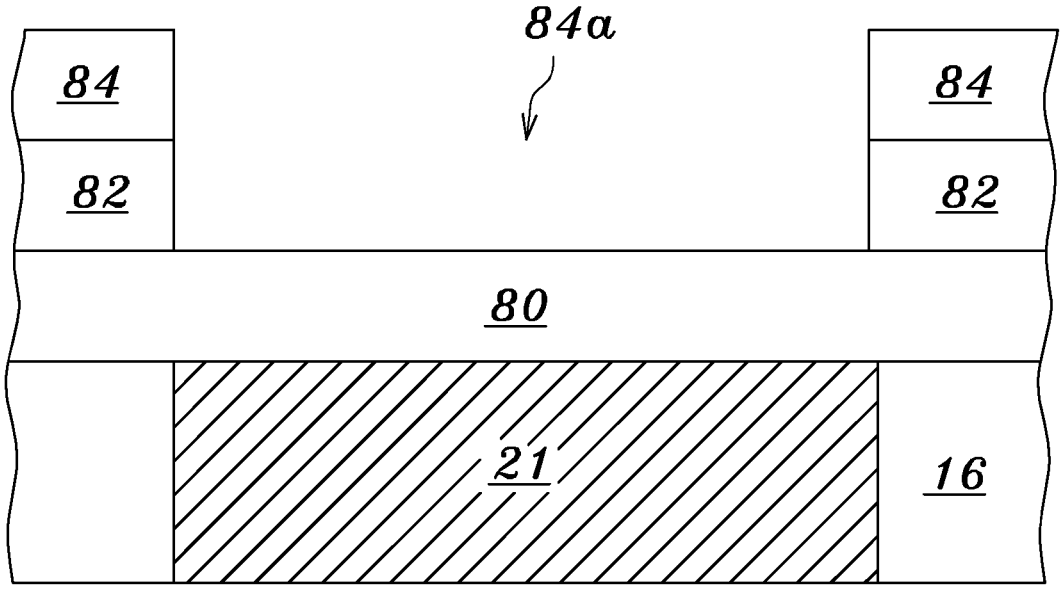

Fig. 10c

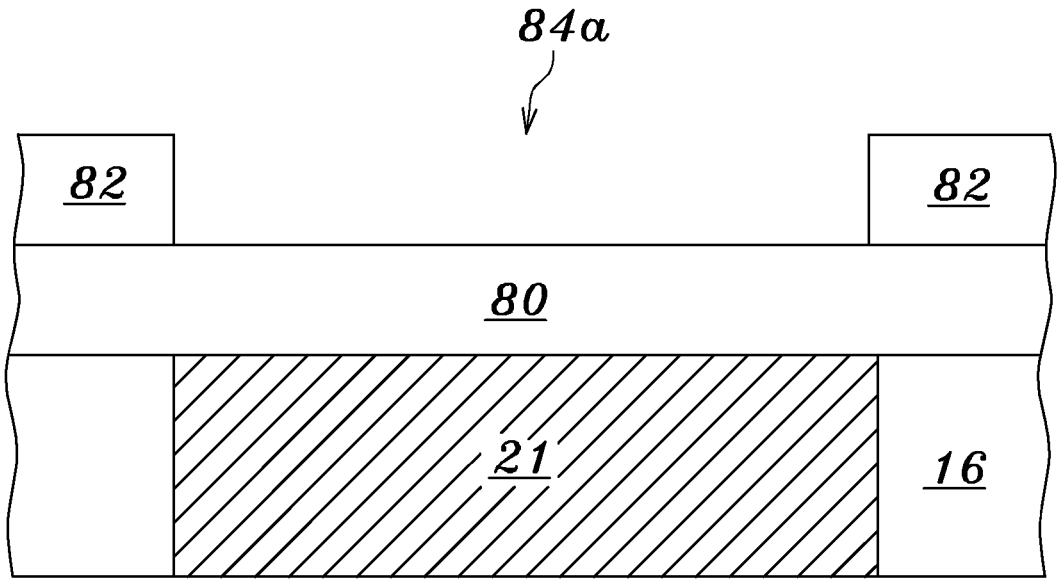

Fig. 10d

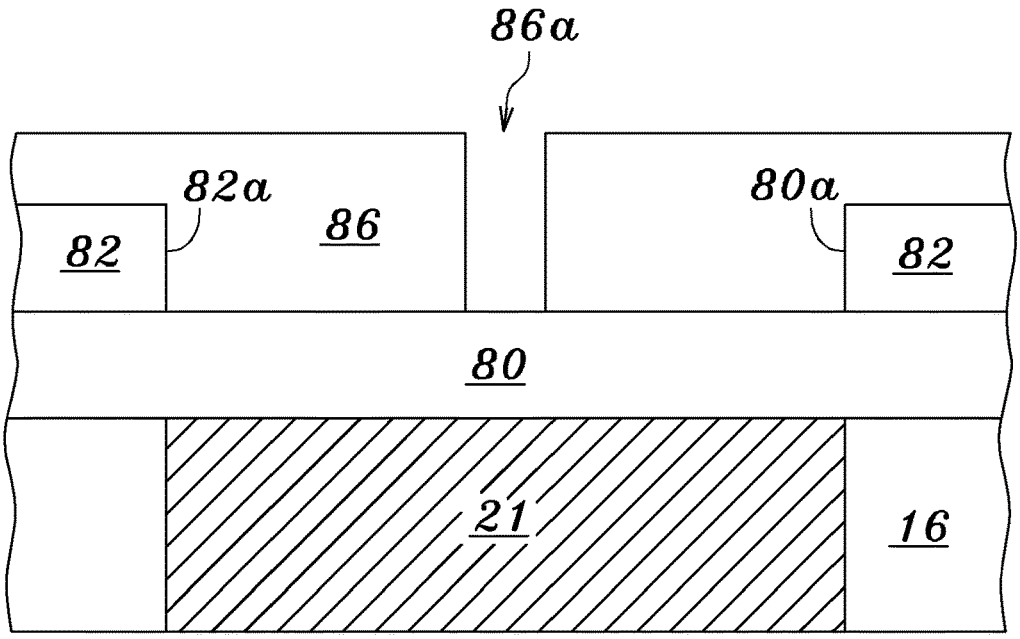

Fig. 10e

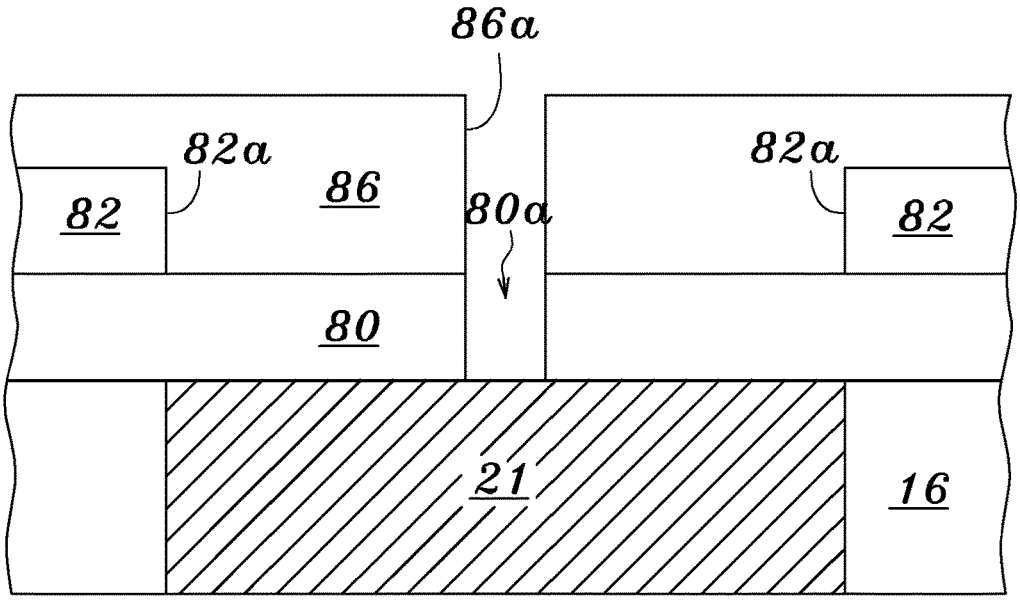

Fig. 10f

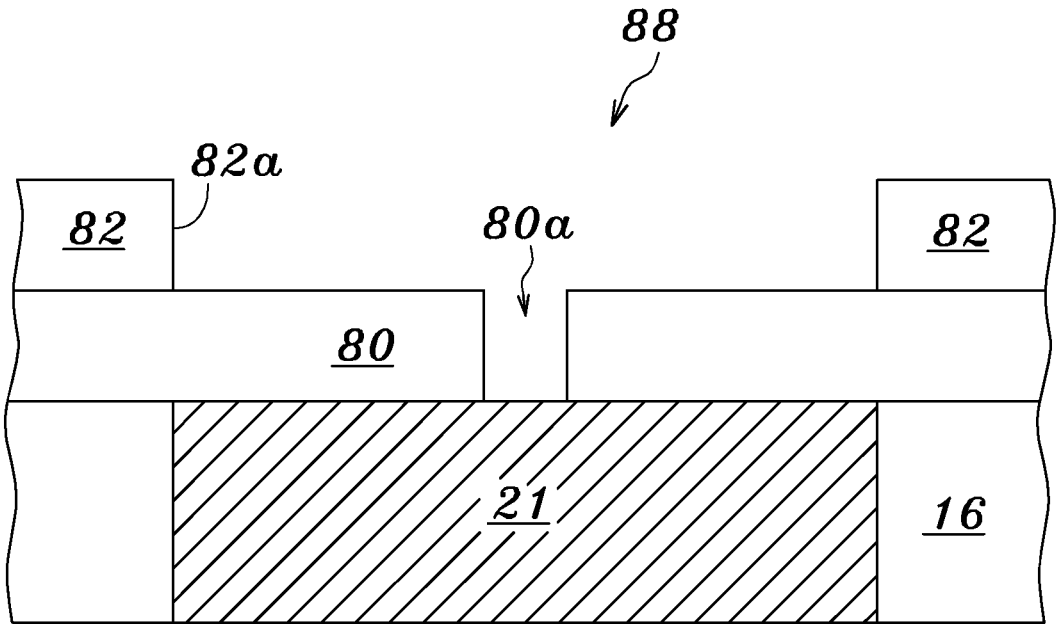

Fig. 10g

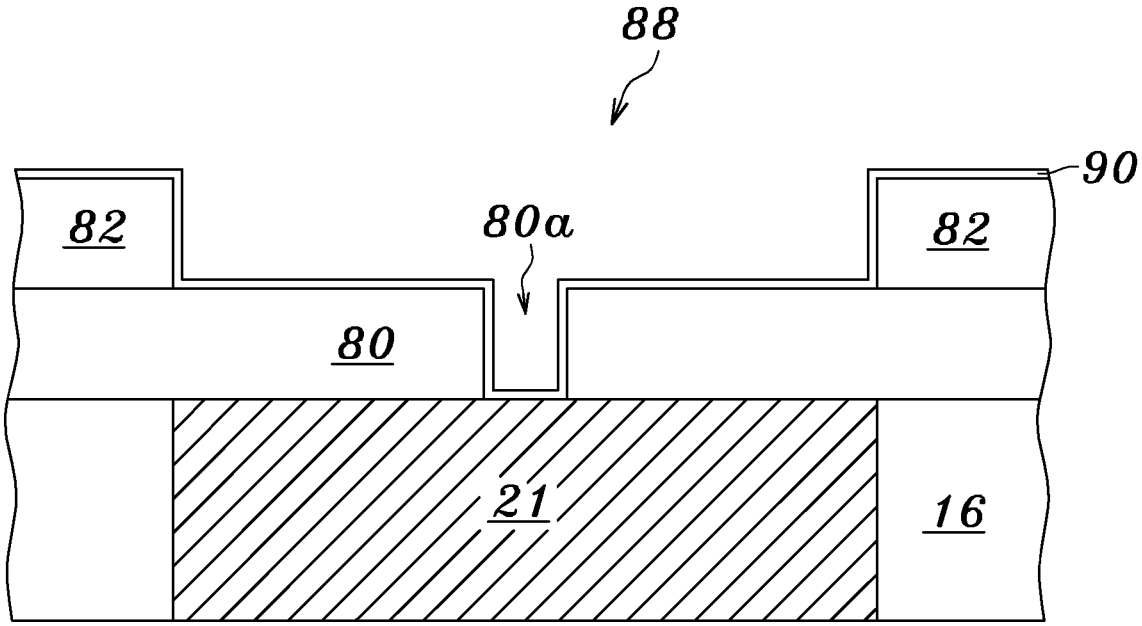

Fig. 10h

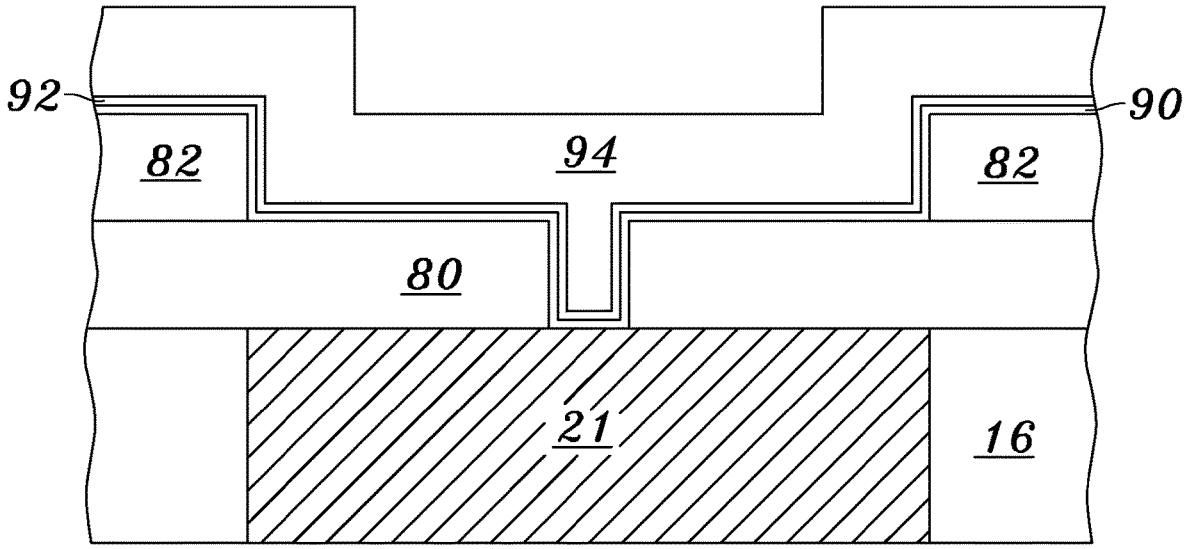

Fig. 10i

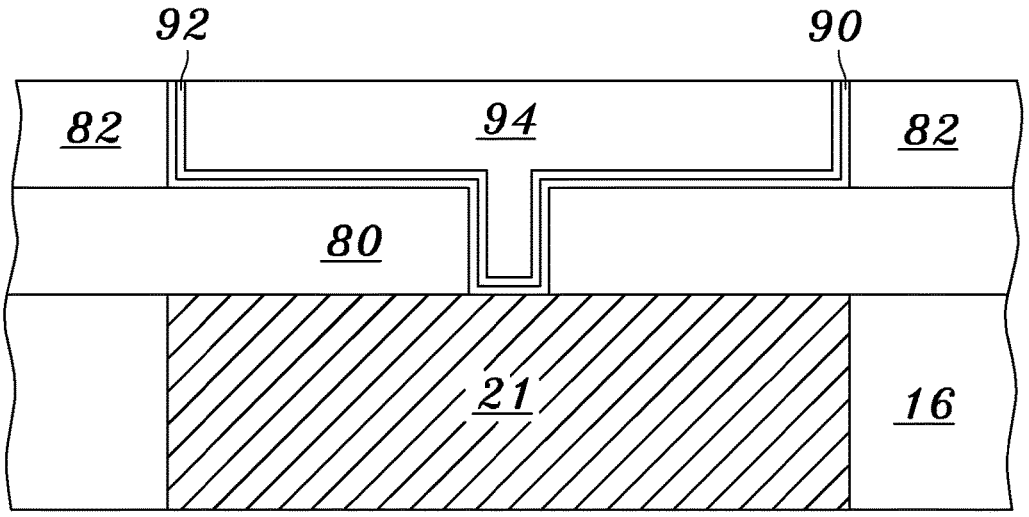

Fig. 10j

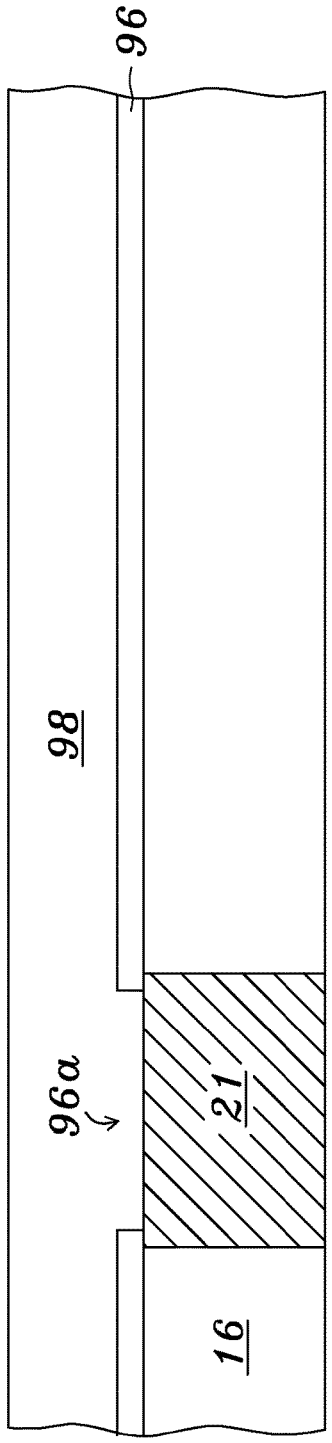

Fig. 11a

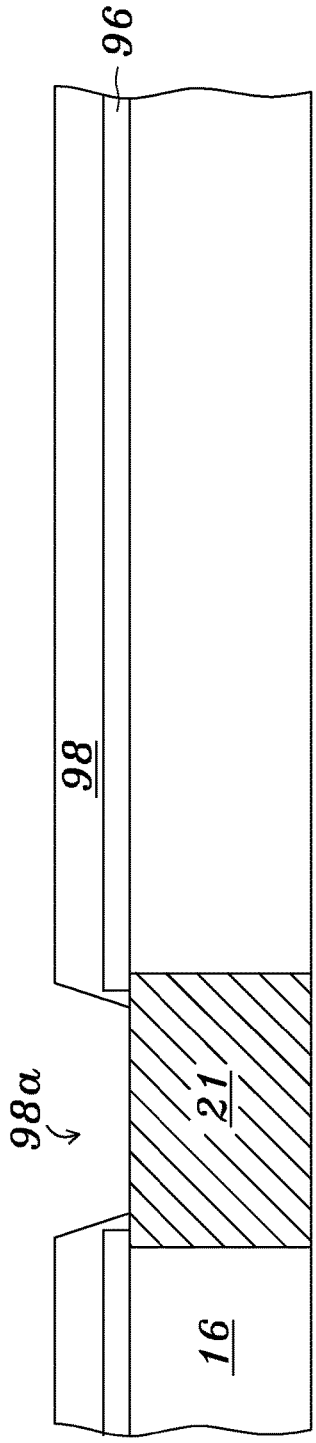

Fig. 11b

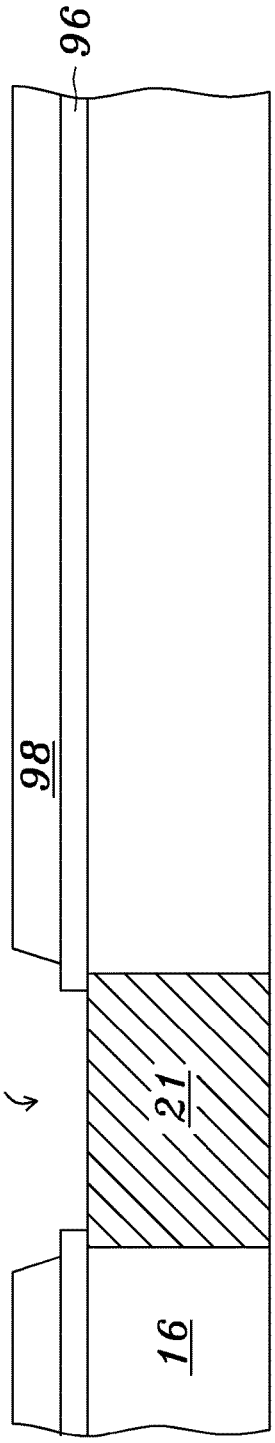

Fig. 11c

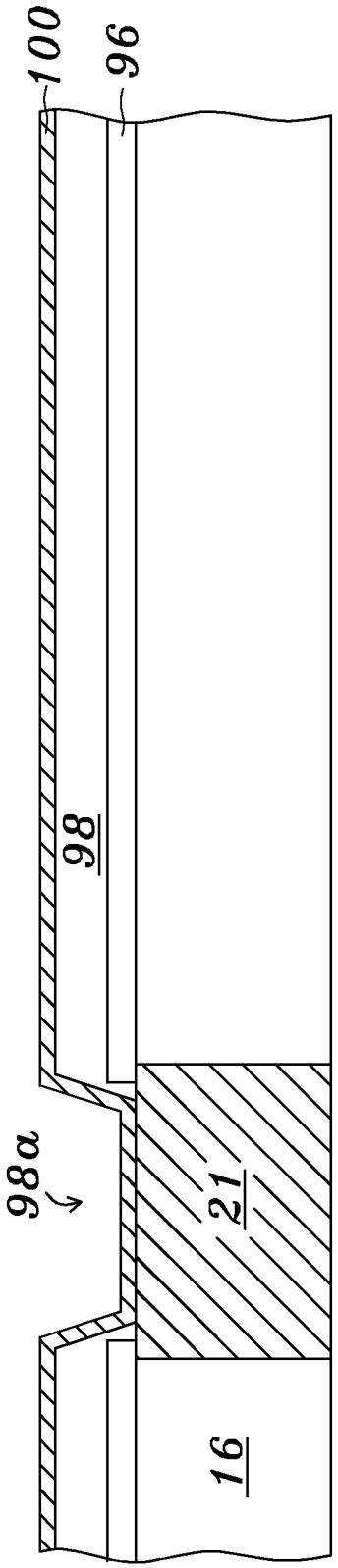

Fig. 11d

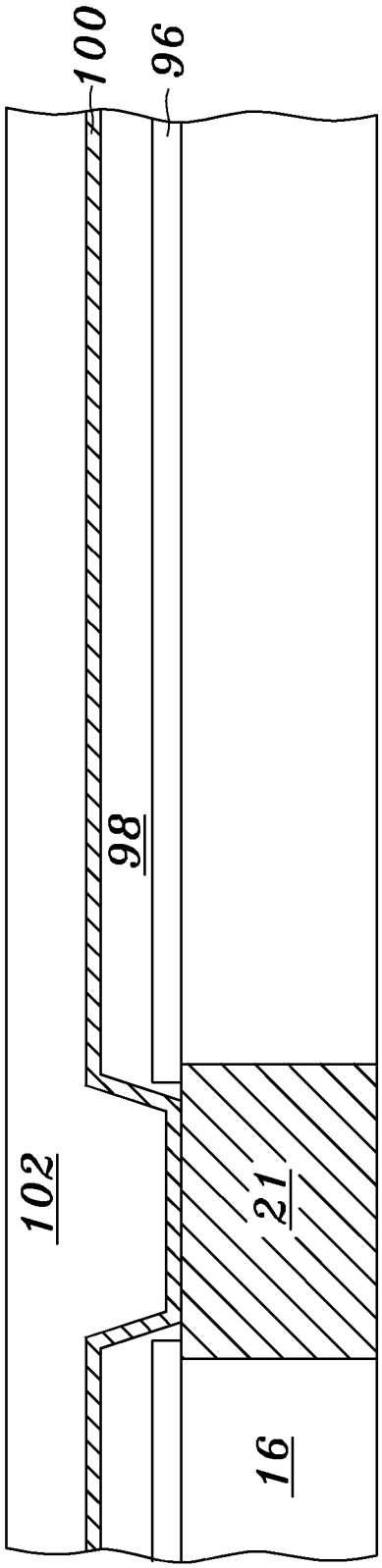

Fig. 11e

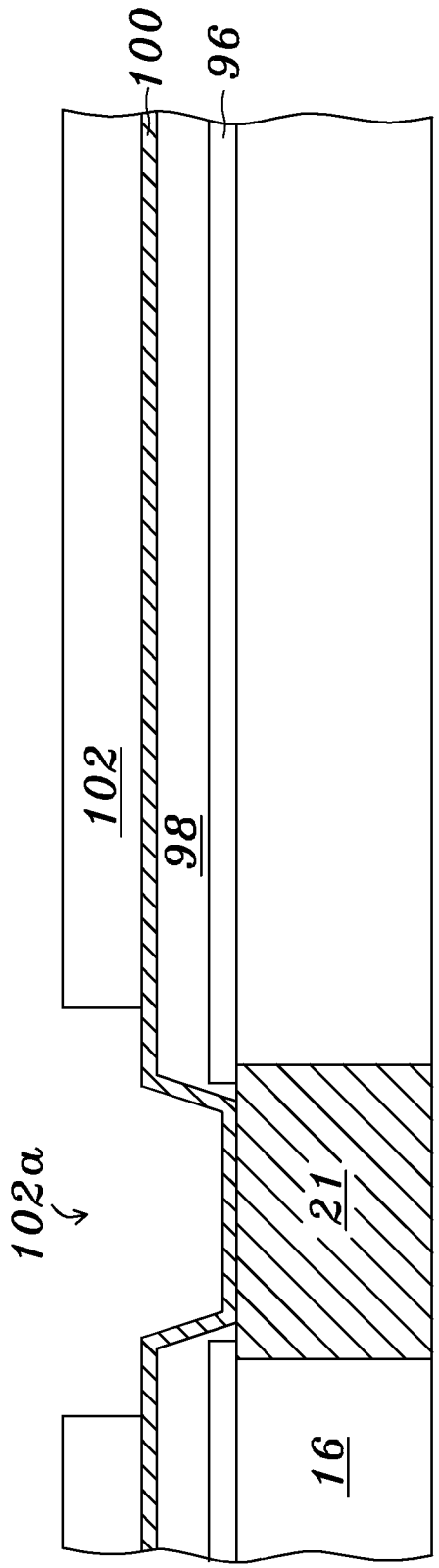

Fig. 11f

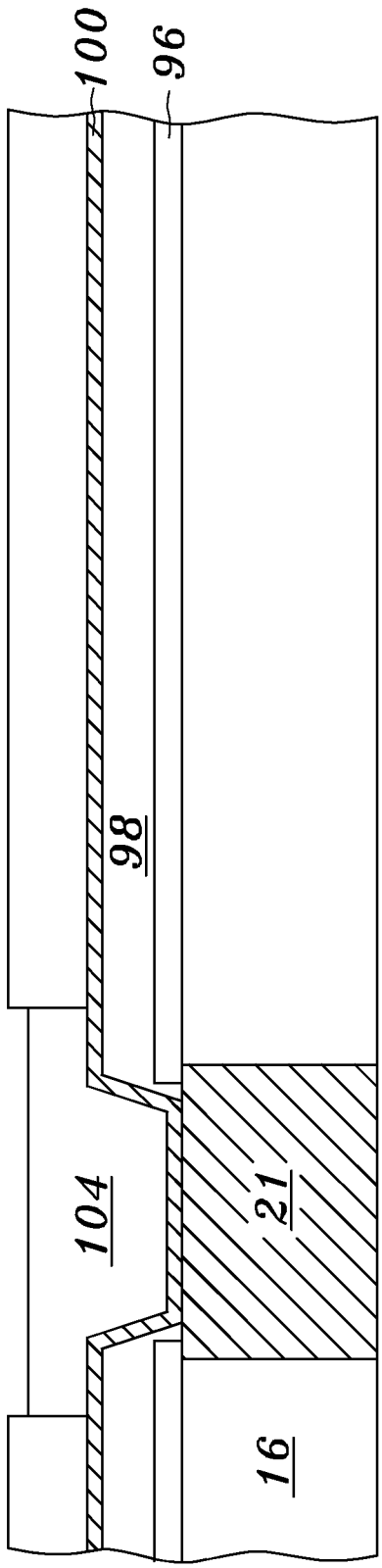

Fig. 11g

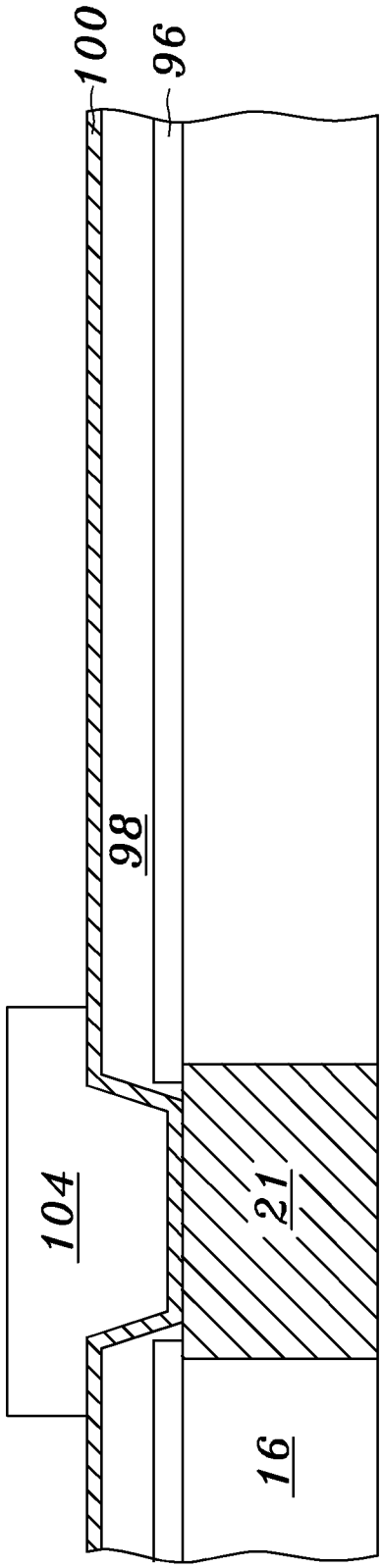

Fig. 11h

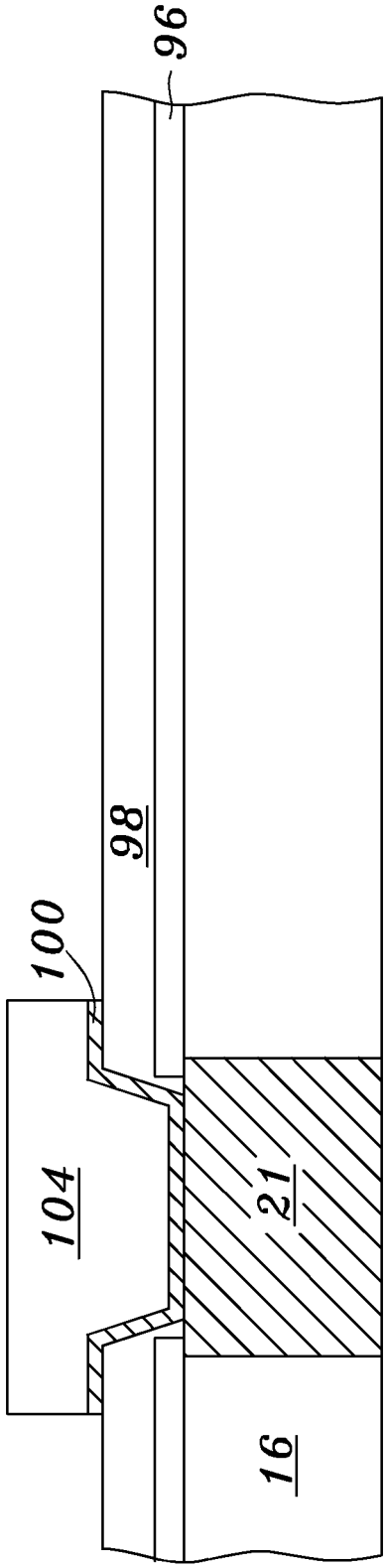

Fig. 11i

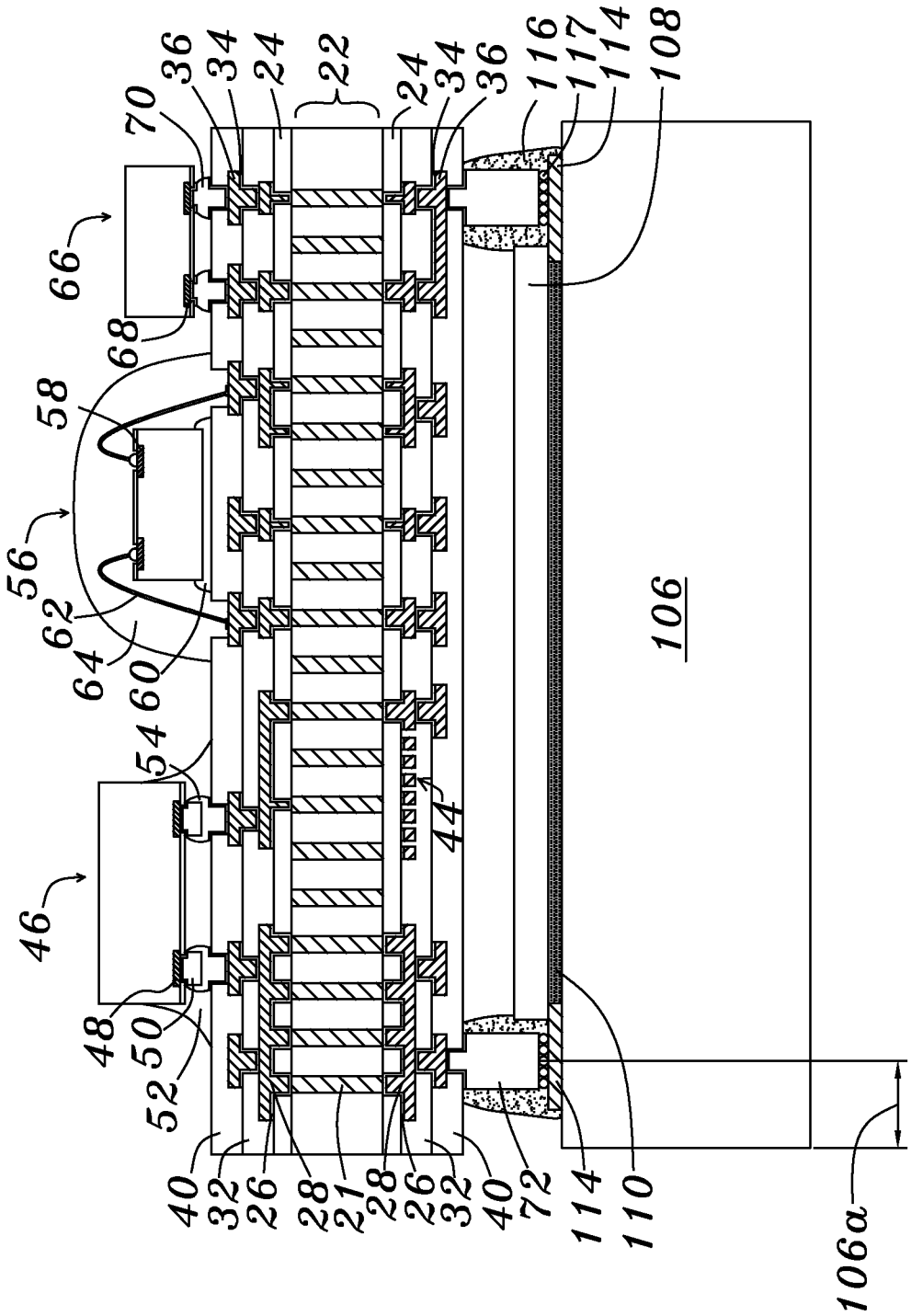
70
36
34
24
22
24
34
36
116
117
114
108
66
68
58
56
62
64
60
54
44
46
48
50
52
40
32
26
28
21
28
26
32
40
72
114
110
106
106a

Fig. 12

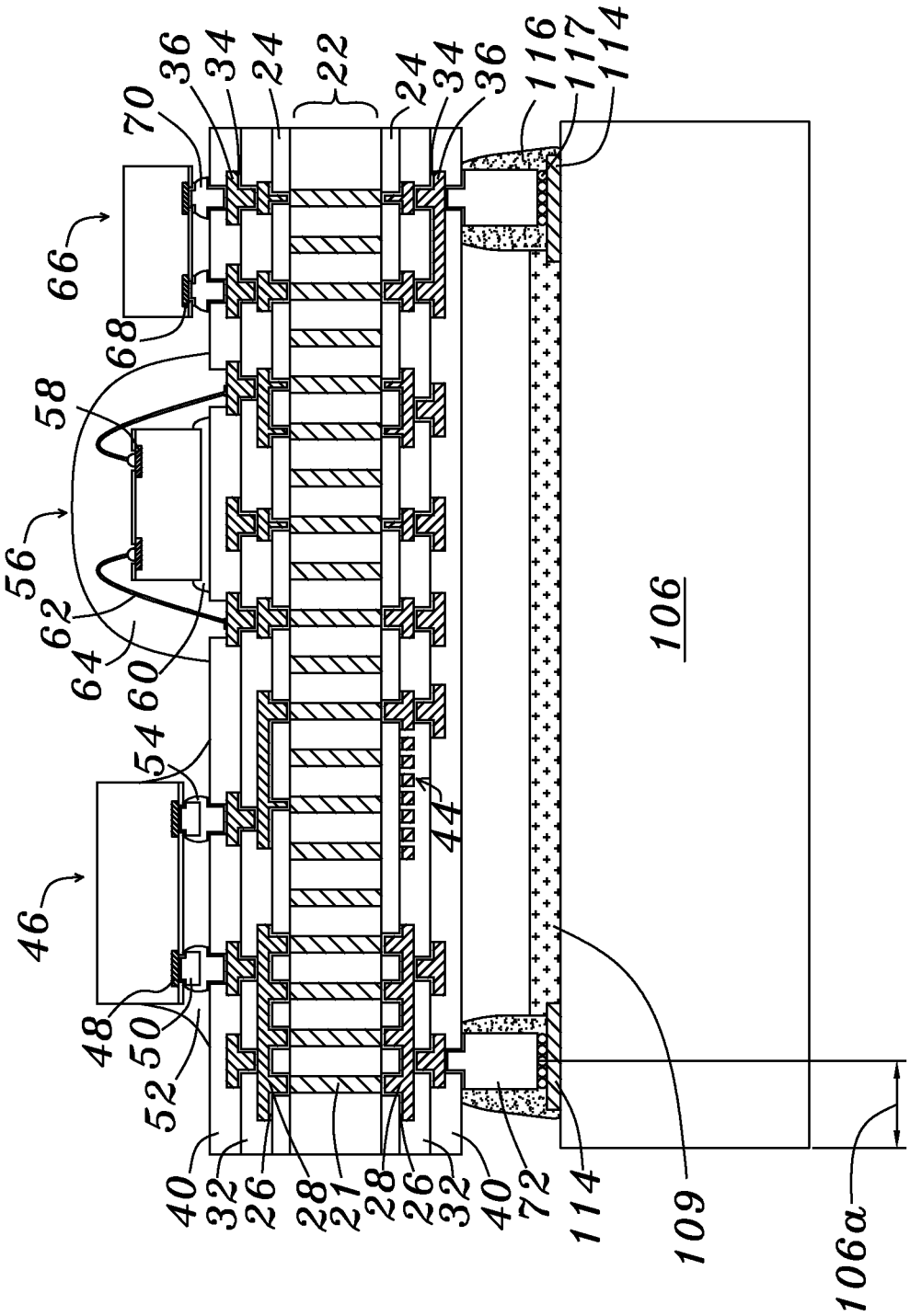
70
36
34
24
22
24
34
36
116
117
114
66
68
58
56
62
64
60
54
44
46
48
50
52
40
32
26
28
21
28
26
32
40
72
114
109
106
106a

Fig. 13

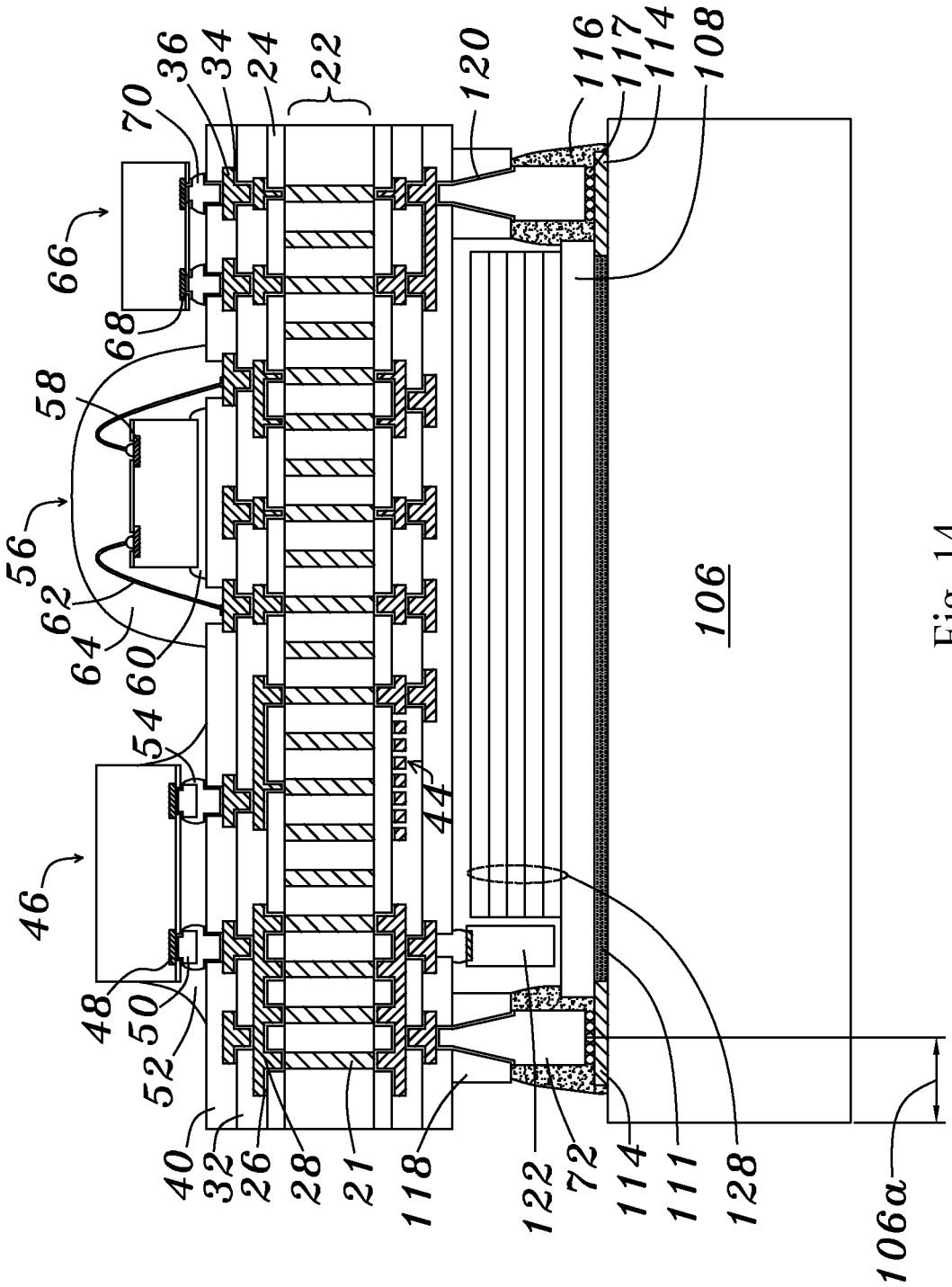
70
36
34
24
22
120
116
117
114
108
66
68
58
56
62
64
60
54
44
46
48
50
52
40
32
26
28
21
118
122
72
114
111
128
106
106a

Fig. 14

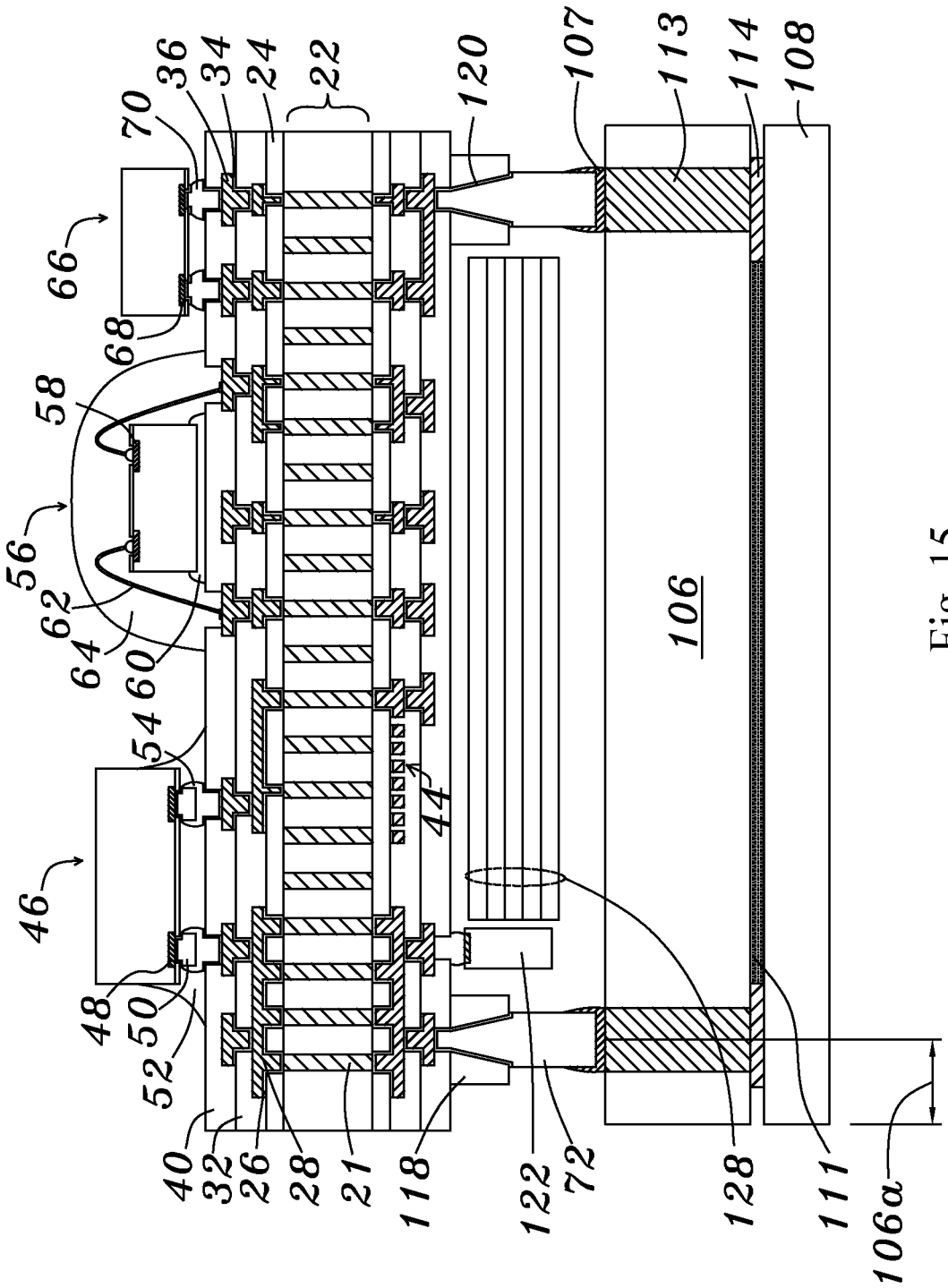
70
36
34
24
22
120
107
113
114
108
66
68
58
56
62
64
60
54
44
46
48
50
52
40
32
26
28
21
118
122
72
128
111
106a
106

Fig. 15

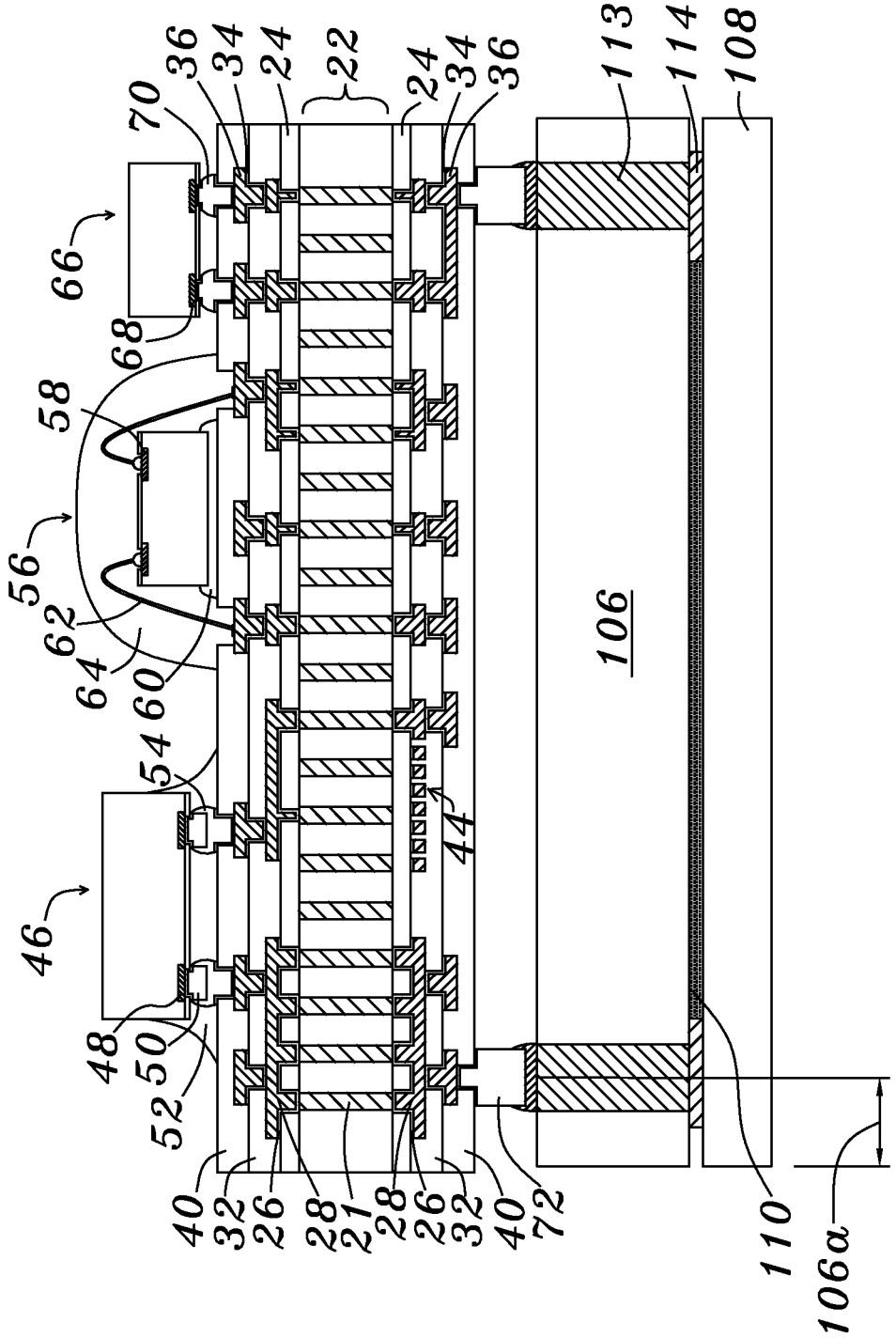
70
36
34
24
22
24
34
36
113
114
108
66
68
58
56
62
64
60
54
44
106
46
48
50
52
40
32
26
28
21
28
26
32
40
72
110
106a

Fig. 16

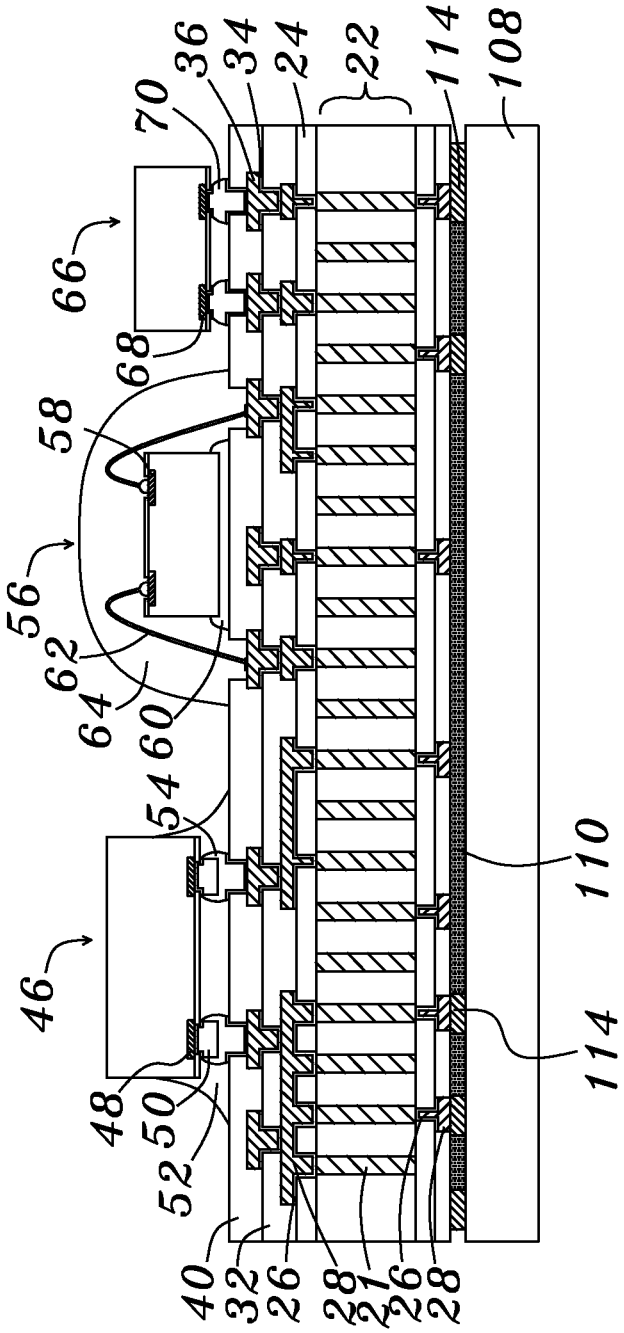
70
36
34
24
22
114
108
66
68
58
56
62
64
60
54
46
48
50
52
40
32
26
28
21
26
28
110
114

Fig. 17a

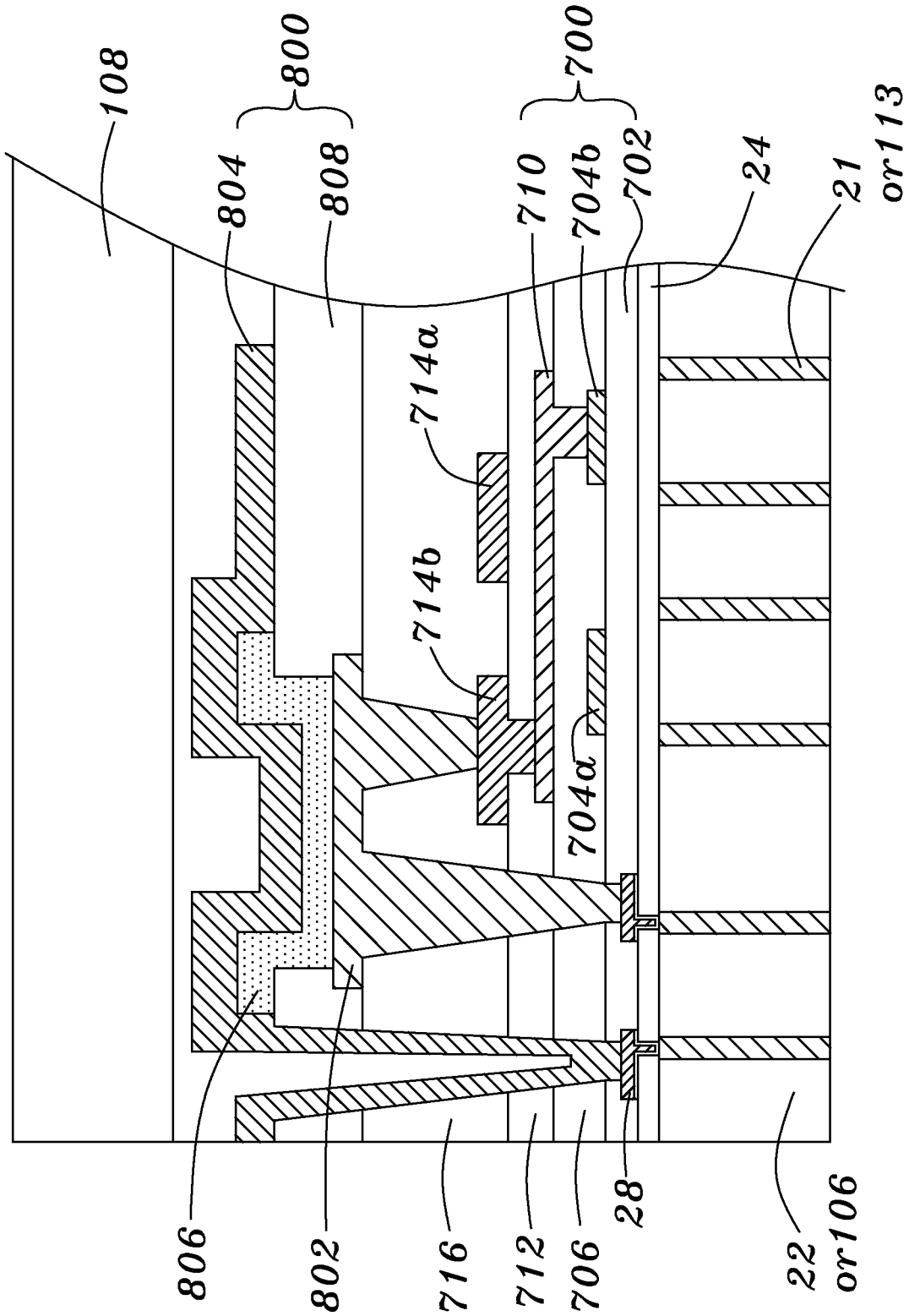
108
800
804
808
700
710
704b
702
24
21
or113
714a
714b
704a
806
802
716
712
706
28
22
or106

Fig. 17b

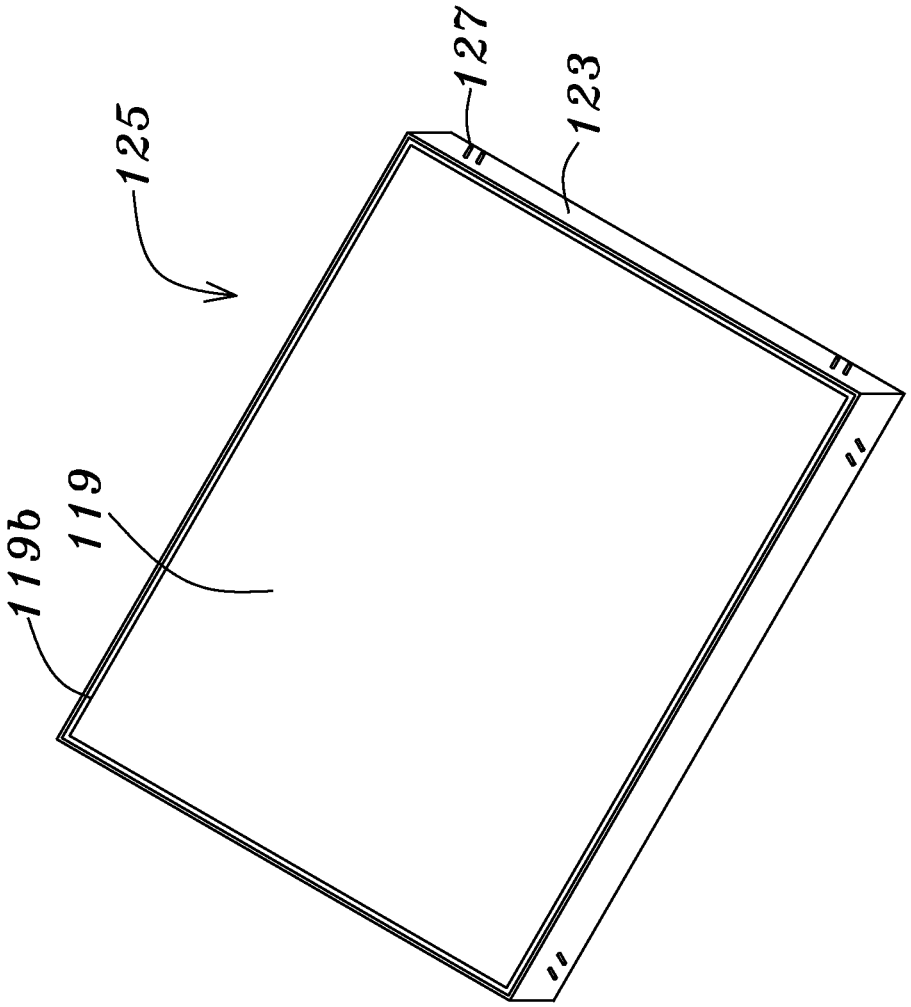

Fig. 18

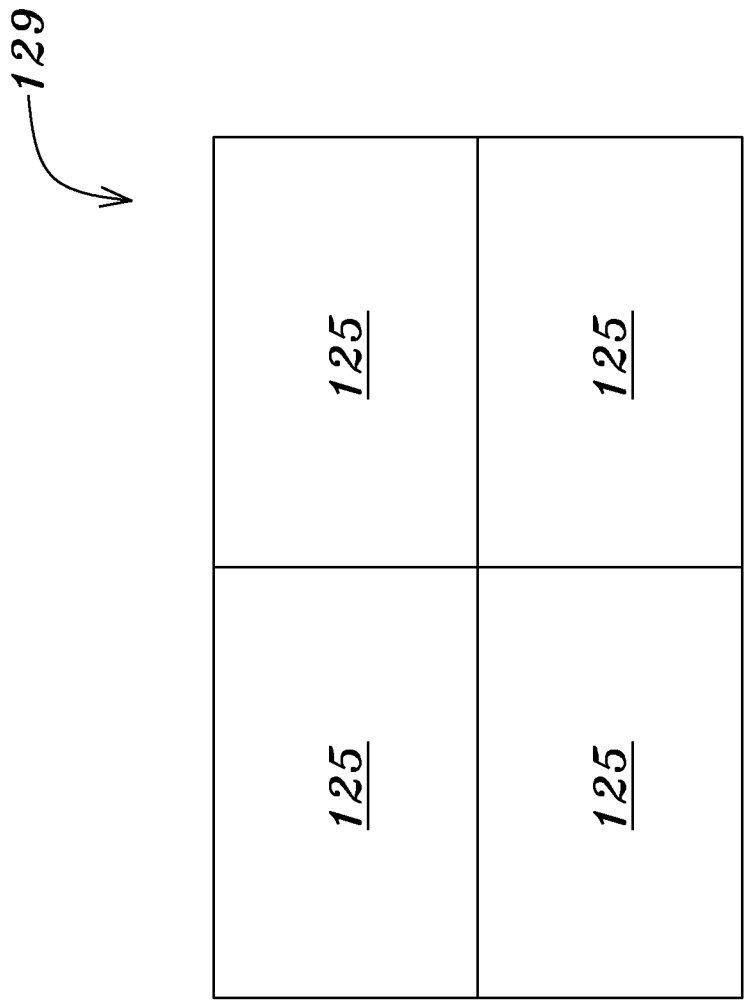

Fig. 19

CHIP PACKAGE

This patent application is a continuation of application Ser. No. 15/261,956, filed Sep. 11, 2016, now pending, which claims priority benefits from U.S. provisional patent application No. 62/219,249, filed Sep. 16, 2015. This patent application of application Ser. No. 15/261,956 is a continuation-in-part of application Ser. No. 14/036,256, filed Sep. 25, 2013, now U.S. Pat. No. 9,615,453, which claims the benefit of priority from U.S. provisional patent application No. 61/705,649, filed Sep. 26, 2012, all of which is incorporated herein by reference in their entirety.

BACKGROUND OF THE DISCLOSURE

Field of the Disclosure

The patent disclosure a method and structure to manufacture a glass substrate, and disclosed embodiments relate to one or more chip building a system on the glass substrate.

Brief Description of the Related Art

As is well known, microelectronic devices have a tendency to be minimized and thinned with its functional development and a semiconductor package mounted on a mother board is also following the tendency in order to realize a mounting of high integration.

When the geometric dimensions of the Integrated Circuits are scaled down, the cost per die is decreased while some aspects of performance are improved. The metal connections which connect the Integrated Circuit to other circuit or system components become of relative more importance and have, with the further miniaturization of the IC, an increasingly negative impact on the circuit performance. The parasitic capacitance and resistance of the metal interconnections increase, which degrades the chip performance significantly. Of most concern in this respect is the voltage drop along the power and ground buses and the RC delay of the critical signal paths. Attempts to reduce the resistance by using wider metal lines result in higher capacitance of these wires.

To solve this problem, the approach has been taken to develop low resistance metal (such as copper) for the wires while low dielectric materials are used in between signal lines.

Increased Input-Output (IO) combined with increased demands for high performance, and then IC's has led to the development of flip-chip Packages. Flip-chip technology fabricates bumps (typically Pb/Sn solders) on Al pads of chip and interconnects the bumps directly to the package media, which are usually ceramic or plastic based. The flip-chip is bonded face down to the package medium through the shortest path. These technologies can be applied not only to single-chip packaging, but also to higher or integrated levels of packaging in which the packages are larger and to more sophisticated substrates that accommodate several chips to form larger functional units.

The flip-chip technique, using an area array, has the advantage of achieving the highest density of interconnection to the device and a very low inductance interconnection to the package. However, pre-testability, post-bonding visual inspection, and TCE (Temperature Coefficient of Expansion) matching to avoid solder bump fatigue are still challenges.

Glass can be used as an interposer to bridge between one or more IC chips and a printed circuit board. In many respects, when used as an interposer/substrate and without the requirement for active devices, glass can be a good substitute for a silicon interposer. The advantages of glass in comparison to silicon as an interposer lie in its much lower material cost. Glass also has a CTE closely matched to silicon, so that reliability of interconnects, especially microbonds, can be expected to be quite good. Glass has some disadvantages in comparison to silicon—notably its lower thermal conductivity and the difficulty in forming Through Glass Vias (TGV's). Both of these topics are discussed elsewhere in this patent.

SUMMARY OF THE DISCLOSURE

Embodiments of the present disclosure provide A display device comprises a display panel substrate and a glass substrate over said display panel substrate, wherein said display panel substrate comprises multiple contact pads, a display area, a first boundary, a second boundary, a third boundary and a fourth boundary, wherein said display area comprises a first edge, a second edge, a third edge and a fourth edge, wherein said first boundary is parallel to said third boundary and said first and third edges, wherein said second boundary is parallel to said fourth boundary and said second and fourth edges, wherein a first least distance between said first boundary and said first edge, wherein a second least distance between said second boundary and said second edge, a third least distance between said third boundary and said third edge, a fourth distance between said fourth boundary and said fourth edge, and wherein said first, second, third and fourth least distances are smaller than 100 micrometers, and wherein said glass substrate comprising multiple metal conductors through in said glass substrate and multiple metal bumps are between said glass substrate and said display panel substrate, wherein said one of said metal conductors is connected to one of said contact pads through one of said metal bumps.

These, as well as other components, steps, features, benefits, and advantages of the present disclosure, will now become clear from a review of the following detailed description of illustrative embodiments, the accompanying drawings, and the claims.

BRIEF DESCRIPTION OF THE DRAWINGS

The drawings disclose illustrative embodiments. They do not set forth all embodiments. Other embodiments may be used in addition or instead. Details that may be apparent or unnecessary may be omitted to save space or for more effective illustration. Conversely, some embodiments may be practiced without all of the details that are disclosed. When the same numeral appears in different drawings, it refers to the same or like components or steps.

Aspects of the disclosure may be more fully understood from the following description when read together with the accompanying drawings, which are to be regarded as illustrative in nature, and not as limiting. The drawings are not necessarily to scale, emphasis instead being placed on the principles of the disclosure.

FIG. **1** illustrates a three-dimensional view of a X-axis nets and a Y-axis nets, in accordance with the present disclosure.

FIG. **2** illustrates a cross-section view of the X-axis nets and the Y-axis nets, in accordance with the present disclosure.

FIG. **3** illustrates a cross-section view of the Z-axis traces crossed to the X-axis nets and the Y-axis nets, in accordance with the present disclosure.

FIG. **4** illustrates a three-dimensional view of the Z-axis traces, X-axis nets and the Y-axis nets, in accordance with the present disclosure.

FIGS. **5***a*-**5***i* illustrate the shape and structure of the Z-axis traces, in accordance with the present disclosure.

FIGS. **6***a*-**6***j* illustrate a 1st process of forming a glass substrate, in accordance with the present disclosure.

FIGS. **6***k*-**6***n* illustrate a top views of the 1st process of forming the glass substrate, in accordance with the present disclosure.

FIGS. **7***a*-**7***o* illustrate a 2nd process of forming the glass substrate, in accordance with the present disclosure.

FIGS. **7***p*-**7***r* illustrate a top views of the 2nd process of forming the glass substrate, in accordance with the present disclosure.

FIGS. **8***a*-**8***d* illustrate cross-section views of the glass substrate and the metal plug, in accordance with the present disclosure.

FIGS. **9***a*-**9***s* illustrate a process to form multiple traces on a top surface and a bottom surface of the glass substrate, in accordance with the present disclosure.

FIGS. **9***t*-**9***u* illustrate cross-section views of multiple chips formed on the glass substrate, in accordance with the present disclosure.

FIG. **9***v* illustrates a cross-section view of the metal bump, in accordance with the present disclosure.

FIG. **9***w* illustrates a cross-section view of multiple chips formed on a top surface and bottom surface of the glass substrate, in accordance with the present disclosure.

FIG. **9***x* illustrates a cross-section view of multiple chips and a 3D-IC package formed on a top surface and bottom surface of the glass substrate, in accordance with the present disclosure.

FIG. **9***y* illustrates a top views of the multiple chips on the glass substrate, in accordance with the present disclosure.

FIGS. **10***a*-**10***j* illustrate a damascene process to form the metal layer on the glass substrate, in accordance with the present disclosure.

FIGS. **11***a*-**11***i* illustrate an embossing process to form the metal layer on the glass substrate, in accordance with the present disclosure.

FIG. **12** illustrates a cross-section view of the glass substrate of the first application formed on an OLED display substrate, in accordance with the present disclosure.

FIG. **13** illustrates a cross-section view of the glass substrate of the second application formed on a MEMs display substrate, in accordance with the present disclosure.

FIG. **14** illustrates a cross-section view of the glass substrate of the third application formed on a LCD display substrate, in accordance with the present disclosure.

FIG. **15** illustrates a cross-section view of the glass substrate of the fourth application formed on an another LCD display substrate, in accordance with the present disclosure.

FIG. **16** illustrates a cross-section view of the glass substrate of the fifth application formed on an OLED display substrate, in accordance with the present disclosure.

FIG. **17***a* illustrates a cross-section view of the glass substrate of the sixth application formed on an OLED display substrate, in accordance with the present disclosure.

FIG. **17***b* illustrates a cross-section view of the structure of the OLED display substrate, in accordance with the present disclosure.

FIG. **18** illustrates a three-dimensional view of the display device, in accordance with the present disclosure.

FIG. **19** illustrates a big display device combined from multiple display device, in accordance with the present disclosure.

While certain embodiments are depicted in the drawings, one skilled in the art will appreciate that the embodiments depicted are illustrative and that variations of those shown, as well as other embodiments described herein, may be envisioned and practiced within the scope of the present disclosure.

DETAILED DESCRIPTION OF THE DISCLOSURE

FIG. **1** illustrates a three-dimensional view of a net **2**, **4**, wherein the net **4** is under the net **2**, wherein the net **2** comprises multiple Y-axis traces **2***a* and multiple X-axis traces **2***b* under the Y-axis traces **2***a*, and wherein the net **4** comprises multiple Y-axis traces **4***a* and multiple X-axis traces **4***b* under the Y-axis traces **4***a*. Multiple gaps **3** and **5** are formed in the net **2** and **4**. Each of the traces **2***a*, **2***b*, **4***a* and **4***b* is easily moved to change the size of gaps **3** and gaps **5**. The diameter (or width) of traces **2***a*, **2***b*, **4***a* and **4***b* are the same, such as between 10 and 30 micrometers, between 20 and 100 micrometers, between 40 and 150 micrometers, between 50 and 200 micrometers, between 200 and 1000 micrometers or between 500 and 10000 micrometers. The traces **2***a*, **2***b*, **4***a* and **4***b* may be metal traces or polymer traces, such as copper traces, copper-gold alloy traces, copper-gold-palladium alloy traces, copper-gold-silver alloy traces, copper-platinum alloy traces, copper-iron alloy traces, copper-nickel alloy traces, copper-tungsten traces, tungsten traces, brass wires, zinc plated brass wires, stainless wires, nickel plated stainless wires, phosphor bronze wires, copper plated the aluminum wires, aluminum traces, phenolic resin traces, epoxy resin traces, melamine-formaldehyde resin traces or polysiloxanes resin traces. The cross-section shape of traces **2***a*, **2***b*, **4***a* and **4***b* may be a circular shape, a Square shape, an oblong shape, a rectangle shape or a flat shape.

FIG. **2** illustrates a cross-section view of the net **2** and the net **4**. The gaps **3** and gaps **5** are aligned with each other.

Next, referring to FIG. **3**, multiple metal traces **6** are crossed the net **2** and the net **4** through the gaps **3** and gaps **5**. The diameter (or width) of metal traces **6** is between 10 and 30 micrometers, between 20 and 100 micrometers, between 40 and 150 micrometers, between 50 and 200 micrometers, between 200 and 1000 micrometers or between 500 and 10000 micrometers. The traces **6** may be metal traces, such as copper traces, copper-gold alloy traces, copper-gold-palladium alloy traces, copper-gold-silver alloy traces, copper-platinum alloy traces, copper-iron alloy traces, copper-nickel alloy traces, copper-tungsten traces, tungsten traces, brass wires, zinc plated brass wires, stainless wires, nickel plated stainless wires, phosphor bronze wires, copper plated the aluminum wires, aluminum traces, titanium-containing layer plated the copper wires, tantalum-containing layer plated the copper wires. The cross-section shape of traces **6** may be a circular shape, a square shape, an oblong shape, a rectangle shape or a flat shape. The diameter (or width) of traces **6** may be the same with the traces **2***a*, **2***b*, **4***a* and **4***b* or different with the traces **2***a*, **2***b*, **4***a* and **4***b*.

Furthermore, we proposed the material of the traces **6** is copper-tungsten alloy, wherein the copper in the copper-tungsten alloy is 50 percent and the tungsten in the copper-tungsten alloy is 50 percent, the copper in the copper-tungsten alloy is 60 percent and the tungsten in the copper-tungsten alloy is 40 percent, the copper in the copper-

tungsten alloy is 70 percent and the tungsten in the copper-tungsten alloy is 30 percent, the copper in the copper-tungsten alloy is 80 percent and the tungsten in the copper-tungsten alloy is 20 percent, the copper in the copper-tungsten alloy is 90 percent and the tungsten in the copper-tungsten alloy is 10 percent, the copper in the copper-tungsten alloy is 40 percent and the tungsten in the copper-tungsten alloy is 60 percent, the copper in the copper-tungsten alloy is 30 percent and the tungsten in the copper-tungsten alloy is 70 percent.

FIG. **4** illustrates a three-dimensional view of a net **2**, **4** and traces **6**.

FIG. **5***a*-**5***i* illustrate the shape and structure of the traces **6**. In FIG. **5***a*, the cross-section shape of traces **6** is a circular shape. In FIG. **5***d*, the cross-section shape of traces **6** is a square shape. In FIG. **5***g*, the cross-section shape of traces **6** is a rectangle shape. In FIG. **5***b*, the cross-section shape of traces **6** is a circular shape and a first covering layer **6***a* is cover on the traces **6**, wherein the first covering layer **6***a* may be a metal layer, such as a nickel-containing layer, a zinc-containing layer, a titanium-containing layer, a tantalum-containing layer, a silver-containing layer, a chromium-containing layer and wherein the first covering layer **6***a* may be an anti-oxidation layer, such as an oxide-containing layer. In FIG. **5***e*, the cross-section shape of traces **6** is a square shape and a first covering layer **6***a* is cover on the traces **6**, wherein the first covering layer **6***a* may be a metal layer, such as a nickel-containing layer, a zinc-containing layer, a titanium-containing layer, a tantalum-containing layer, a silver-containing layer, a chromium-containing layer and wherein the first covering layer **6***a* may be an anti-oxidation layer, such as an oxide-containing layer. In FIG. **5***h*, the cross-section shape of traces **6** is a rectangle shape and a first covering layer **6***a* is cover on the traces **6**, wherein the first covering layer **6***a* may be a metal layer, such as a nickel-containing layer, a zinc-containing layer, a titanium-containing layer, a tantalum-containing layer, a silver-containing layer, a chromium-containing layer and wherein the first covering layer **6***a* may be an anti-oxidation layer, such as an oxide-containing layer. In FIG. **5***c*, the cross-section shape of traces **6** is a circular shape and a second covering layer **6***b* is cover on the first covering layer **6***a*, wherein the second covering layer **6***b* may be an adhesion layer, such as a nickel-containing layer, a zinc-containing layer, a titanium-containing layer, a tantalum-containing layer, a silver-containing layer, a chromium-containing layer and wherein the first covering layer **6***a* may be an anti-oxidation layer, such as an oxide-containing layer. In FIG. **5***f*, the cross-section shape of traces **6** is a square shape and a second covering layer **6***b* is cover on the first covering layer **6***a*, wherein the second covering layer **6***b* may be an adhesion layer, such as a nickel-containing layer, a zinc-containing layer, a titanium-containing layer, a tantalum-containing layer, a silver-containing layer, a chromium-containing layer and wherein the first covering layer **6***a* may be an anti-oxidation layer, such as an oxide-containing layer. In FIG. **5***i*, the cross-section shape of traces **6** is an oblong shape and a second covering layer **6***b* is cover on the first covering layer **6***a*, wherein the second covering layer **6***b* may be an adhesion layer, such as a nickel-containing layer, a zinc-containing layer, a titanium-containing layer, a tantalum-containing layer, a silver-containing layer, a chromium-containing layer and wherein the first covering layer **6***a* may be an anti-oxidation layer, such as an oxide-containing layer.

Next, FIGS. **6***a*-**6***j* are illustrated a 1st process of forming a glass substrate of the invention. Please referring to FIG. **6***a*, the traces **6** are stretched to a suitable length L**1**, e.g., smaller than 5 meters, such as between 0.5 and 1 meter, or between 1 and 3 meters. At the same time, the net **4** is moved down to a suitable location. The pitch t**1** between the traces **2***a*, **2***b*, **4***a*, **4***b* is greater than the diameter (or width) of traces **6**.

Next, referring to FIG. **6***b*, the traces **2***a*, **2***b*, **4***a* and **4***b* are moved to change the pitch t**1** to a pitch t**2**, then the traces **6** are closed up to a pitch t**3**. The pitch t**3** substantially the same with the diameter (or width) of the traces **2***a*, **2***b*, **4***a* and **4***b*, such as between 5 and 20 micrometers, between 20 and 50 micrometers, between 30 and 80 micrometers, between 20 and 100 micrometers, between 40 and 150 micrometers, between 50 and 200 micrometers, between 200 and 1000 micrometers or between 500 and 10000 micrometers. At the same time, maybe applied a force to stretch the traces **6**, **2***a*, **2***b*, **4***a* and **4***b* and make the traces **6** keep strength and keep the pitch t**3** fixed.

Next, referring to FIG. **6***c*, a thermal resistance layer **8** is formed on surfaces of the net **4**. The thermal resistance layer **8** may be a polymer layer, such as a thermosetting resin, phenolic resin, epoxy resin, melamine-formaldehyde resin, polysiloxanes resin, plaster layer, wherein the thermal resistance layer **8** has a heat deflection temperature between 400 and 900° C. When a liquid thermal resistance layer **8** formed on the net **4** and the thermal resistance layer **8** permeated the net **4** through the gaps **5**, wherein the thermal resistance layer **8** covers the gaps **5** between traces **4***a*, traces **4***b* and traces **6**, then curing the thermal resistance layer **8**. The thermal resistance layer **8** has a thickness between 0.05 and 1 meter.

Next, referring to FIG. **6***d*, a mold **10** is provided between the net **2** and the net **4**, wherein the mold **10** surrounds the traces **6** and on the thermal resistance layer **8**. The mold **10** is held up by a machine or a device. The mold **10** may be a metal mold, a ceramics mold or a polymer mold, which has a heat deflection temperature between 400° C. and 900° C. or between 800° C. and 1300° C.

Next, referring to FIG. **6***e*, a fixed layer **12** is formed on the thermal resistance layer **8**, wherein the fixed layer **12** may be a glass layer or a polymer layer. When the material of the fixed layer **12** is glass, the fixed layer **12** is a high temperature liquid to form on the thermal resistance layer **8**, and then the fixed layer **12** down to a suitable temperature becomes a solid state. The fixed layer **12** has a thickness between 0.01 and 1 meter. The bottom of traces **6** is fixed by the fixed layer **12**.

Next, referring to FIG. **6***f*, the traces **6** under the net **4** are cut. A tank **14** carries the mold **10**, net **4** and the fixed layer **12**.

Next, referring to FIG. **6***g*, a glass layer (liquid form) **16** is formed on the fixed layer **12**. The glass layer **16** is a high temperature liquid to form on the fixed layer **12** and fill in the mold **10**, and then the glass layer **16** down to a suitable temperature becomes a solid state, wherein the glass layer **16** has a glass transition temperature between 300° C. and 900° C., between 500° C. and 800° C., between 900° C. and 1200° C. or between 1000° C. and 1800° C. The glass layer **16** is a low melting point glass material, wherein the glass layer **16** has a melting point between 300° C. and 900° C., 800° C. and 1300° C., between 900° C. and 1600° C., between 1000° C. and 1850° C., or between 1000° C. and 2000° C., wherein the melting point may smaller than 1500° C. The glass layer **16** has a thickness greater than 0.5 meters or greater than 0.1 meter. Furthermore, there is a few bubbles or no bubble in glass layer **16**, for example, there is zero to 3 bubbles in one cubic meter of the glass layer **16**, 1 to 10 bubbles in one cubic meter of the glass layer **16**, 5

to 30 bubbles in one cubic meter of the glass layer **16** or 20 to 60 bubbles in one cubic meter of the glass layer **16**, wherein the bubble has a diameter between 0.0001 and 0.001 centimeters, between 0.001 and 0.05 centimeters, between 0.05 and 0.1 centimeters or between 0.05 and 0.5 centimeters. The glass layer **16** may be removed bubbles through multiple processes of a laminating process, a squeezing process and a heating process.

The glass layer **16** refers to an amorphous solid. The material of the glass layer **16** may be included soda-lime glass, boro-silicate glass, alumo-silicate glass, fluoride glasses, phosphate glasses or chalcogen glasses. For example, the composition of the soda-lime glass comprises SiO_2 (74%), Na_2O (13%), CaO (10.5%), Al_2O_3 (1.3%), K_2O (0.3%), SO_3 (0.2%), MgO (0.2%), Fe_2O_3 (0.04%), TiO_2 (0.01%), the composition of the boro-silicate glass comprises SiO_2 (81%), B_2O_3 (12%), Na_2O (4.5%), Al_2O_3(2.0%), the composition of the phosphate glasses comprises a percentage of the P_2O_5 material between 3% and 10% or between 5% and 20%.

A glass, once formed into a solid body, is capable of being softened and perhaps remitted into a liquid form. The "glass transition temperature" of a glass material is a temperature below which the physical properties of the glass are similar to those of a solid and above which the glass material behaves like a liquid.

If a glass is sufficiently below the glass transition temperature, molecules of the glass may have little relative mobility. As a glass approaches the glass transition temperature, the glass may begin to soften and with increasing temperature, the glass will ultimately melt into the liquid state. Thus, a glass body may be softened to an extent sufficient to enable manipulation of the body's shape, allowing for the formation of holes or other features in the glass body. Once the desired form is obtained, glass is usually annealed for the removal of stresses. Surface treatments, coatings or lamination may follow to improve the chemical durability (glass container coatings, glass container internal treatment), strength (toughened glass, bulletproof glass, windshields), or optical properties (insulated glazing, anti-reflective coating).

Furthermore, the glass layer **16** may be replaced by a polymer layer. When the polymer layer cured to a solid state, then the polymer layer has a coefficient of expansion between 3 and 10 ppm/° C.

Next, referring to FIG. **6***h*, the mold **10** and the tank **14** are removed and cut the traces **6** from net **2**.

Next, referring to FIG. **6***i*, the net **4** and the thermal resistance layer **8** are removed, and then a column **25** is produced.

Next, referring to FIG. **6***j*, the traces **6** out of the column **25** are removed and cutting the column **25** to produce multiple first substrates **20**, wherein the first substrate **20** has a thickness between 20 and 100 micrometers, between 50 and 150 micrometers, between 100 and 300 micrometers or between 150 and 2000 micrometers or greater than 1000 micrometers. The first substrates **20** may be made a planarization process using a suitable process, such as a chemical mechanical polishing (CMP) procedure, mechanical grinding, or laser drilling

Next, referring to FIG. **6***k*, the first substrate **20** comprises multiple second substrates **22**. The second substrates **22** are well-regulated an array in the first substrate **20**. Each of the second substrates **22** has multiple metal plugs **21**, wherein the metal plug **21** is formed from metal traces **6**. The metal plug **21** has the same material and structure with metal trace **6**.

Next, referring to FIGS. **6***l*-**6***n*, the metal plugs **21** may be arranged in different types, such as FIG. **6***l*, the metal plugs **21** are arranged on the side portions of the second substrate **22**, or such as FIG. **6***m*, the metal plugs **21** are arranged on the side portions and center portion of the second substrate **22**, or such as FIG. **6***n*, some portions of the second substrate **22** are not arranged the metal plugs **21**.

FIGS. **7***a*-**7***m* are illustrated a 2nd process of forming a glass substrate of the invention. Please referring to FIG. **7***a*-**7***b*, there is illustrated a first metal plate **7** in FIG. **7***a*, illustrated a three-dimensional view of the first metal plate **7** in FIG. **7***b*. The first metal plate **7** has a thickness between 25 micrometers and 1000 micrometers, between 20 micrometers and 500 micrometers, between 30 micrometers and 400 micrometers or between 20 micrometers and 250 micrometers. The first metal plate **7** comprising a first portion **71**, a second portion **73** and a third portion **75** between the first portion **71** and second portion **73**, wherein the third portion **75** comprises multiple non-circular metal traces **752** are connected to the first portion **71** and the second portion **73**, wherein a cross-section view of the non-circular trace **752** comprising a square shape or a rectangle shape. One of the non-circular traces **752** has a width greater than the thickness of one of the non-circular traces **752**, such as between 150 micrometers and 3000 micrometers, between 300 micrometers and 1500 micrometers, between 200 micrometers and 800 micrometers or between 100 micrometers and 500 micrometers. Multiple gaps **754** are between each two neighboring non-circular traces **752**, wherein the gap **754** is between 50 micrometers and 3000 micrometers, between 300 micrometers and 1500 micrometers, between 200 micrometers and 800 micrometers or between 150 micrometers and 500 micrometers. The first metal plate **7** comprises a copper metal layer, copper-gold alloy metal layer, copper-gold-palladium alloy metal layer, copper-gold-silver alloy metal layer, copper-platinum alloy metal layer, copper-iron alloy metal layer, copper-nickel alloy metal layer, copper-tungsten metal layer, tungsten metal layer, brass metal layer, zinc plated brass metal layer, stainless metal layer, nickel plated stainless metal layer, phosphor bronze metal layer, copper plated the aluminum metal layer or aluminum metal layer. There are two holes **71***a* in the first portion **71**, wherein the hole **71***a* has a diameter between 600 micrometers and 2000 micrometers, between 1000 micrometers and 3000 micrometers or between 2000 micrometers and 5000 micrometers. There are two holes **73***a* corresponding to the hole **71***a* in the first portion **71**, wherein the hole **73***a* has a diameter between 600 micrometers and 2000 micrometers, between 1000 micrometers and 3000 micrometers or between 2000 micrometers and 5000 micrometers, wherein a first least distance between the two holes **71***a* is substantially the same to a second least distance between the two holes **73***a*.

Next, referring to FIGS. **7***c*-**7***d*, there is illustrated a second metal plate **9** in FIG. **7***c*, illustrated a three-dimensional view of the second metal plate **9** in FIG. **7***d*. The second metal plate **9** has a thickness between 25 micrometers and 600 micrometers, between 20 micrometers and 300 micrometers, between 30 micrometers and 250 micrometers or between 25 micrometers and 180 micrometers. There are two holes **90***a* in the second metal plate **9**, wherein the hole **90***a* has a diameter between 600 micrometers and 2000 micrometers, between 1000 micrometers and 3000 micrometers or between 2000 micrometers and 5000 micrometers, wherein a third least distance between the two holes **90***a* is substantially the same to a second least distance between the two holes **73***a* and substantially the same to the first least

distance between the two holes **71***a*. The second metal plate **9** comprises a copper metal layer, copper-gold alloy metal layer, copper-gold-palladium alloy metal layer, copper-gold-silver alloy metal layer, copper-platinum alloy metal layer, copper-iron alloy metal layer, copper-nickel alloy metal layer, copper-tungsten metal layer, tungsten metal layer, brass metal layer, zinc plated brass metal layer, stainless metal layer, nickel plated stainless metal layer, phosphor bronze metal layer, copper plated the aluminum metal layer or aluminum metal layer.

Next, referring to FIG. **7***e*, there is illustrated a three-dimensional view of a third metal plate **11** in FIG. **7***e*. The third metal plate **11** has a thickness between 25 micrometers and 600 micrometers, between 20 micrometers and 300 micrometers, between 30 micrometers and 250 micrometers or between 25 micrometers and 180 micrometers. There are four holes **110***a*, **112***a*, **114***a*, **116***a* in the third metal plate **11**, wherein the hole **110***a*, **112***a*, **114***a*, **116***a* have a diameter between 600 micrometers and 2000 micrometers, between 1000 micrometers and 3000 micrometers or between 2000 micrometers and 5000 micrometers, wherein a fourth least distance between the hole **110***a* and hole **112***a* and a fifth least distance between the hole **114***a* and hole **116***a* are substantially the same to a second least distance between the two holes **73***a* and substantially the same to the first least distance between the two holes **71***a*. The third metal plate **11** comprises a copper metal layer, copper-gold alloy metal layer, copper-gold-palladium alloy metal layer, copper-gold-silver alloy metal layer, copper-platinum alloy metal layer, copper-iron alloy metal layer, copper-nickel alloy metal layer, copper-tungsten metal layer, tungsten metal layer, brass metal layer, zinc plated brass metal layer, stainless metal layer, nickel plated stainless metal layer, phosphor bronze metal layer, copper plated the aluminum metal layer or aluminum metal layer.

Next, referring to FIG. **7***f*-FIG. **7***i*, providing two bolts **130**, **132** pass through two holes **150***a* of a fixing metal plate **150** and providing two bolts **134**, **136** pass through two holes **152***a* of a fixing metal plate **152** respectively. Next, the bolts **130**, **132**, **134**, **136** are passing through the holes **110***a*, **112***a*, **114***a*, **116***a* of the third metal plate **11** respectively and the third metal plate **11** is formed on the fixing metal plate **150** and the fixing metal plate **152**. Next, the bolts **130**, **132** are passing through the hole **90***a* of the second metal plate **9** and the bolts **134**, **136** are passing through the hole **90***a* of another the second metal plate **9**, then the second metal plates **9** are formed on the third metal plate **11**. Next, the bolts **130**, **132**, **134**, **136** are passing through the holes **71***a*, **73***a* of the first metal plate **7** respectively and the first metal plate **7** is formed on the second metal plates **9**. Next, repeating to site another the second metal plates **9** on another the first metal plate **7** sequentially until to expose a top of the bolts **130**, **132**, **134**, **136**. Next, the top of the bolts **130**, **132**, **134**, **136** are passing through the holes **110***a*, **112***a*, **114***a* and **116***a* of another the third metal plate **11** respectively and the third metal plate **11** is formed on the second metal plates **9**. Next, the top of the bolts **130**, **132** are passing through two holes **150***a* of another the fixing metal plate **150** and the top of the bolts **134**, **136** are passing through two holes **152***a* of another the fixing metal plate **152** respectively, then the fixing metal plates **150**, **152** are formed on the third metal plate **11**. Finally, providing four sleeve nuts **17** lock on the top of the bolts **130**, **132**, **134**, **136**. Then, multiple the first metal plates **7**, multiple the second metal plates **9**, two the third metal plates **11**, two fixing metal plates **150** and two fixing metal plates **152** forming a metal trace block **19**.

Next, referring to FIG. **7***j* the metal trace block **19** is put in a mold **23**. The mold **23** may be a metal mold, a ceramics mold or a polymer mold, which has a heat deflection temperature between 400° C. and 900° C. or between 800° C. and 1300° C. The mold **23** comprises a gas inlet **23***a* and a liquid input **23***b*, wherein the gas inlet **23***a* is used to input N_2 gas and the liquid input **23***b* is used to input the liquid form glass layer.

Next, referring to FIG. **7***k*, the glass layer (liquid form) **16** fill in the mold **23**. The glass layer **16** is a high temperature liquid and fill in the mold **23**, and then the glass layer **16** down to a suitable temperature becomes a solid state, wherein the glass layer **16** has a glass transition temperature between 300° C. and 900° C., between 500° C. and 800° C., between 900° C. and 1200° C. or between 1000° C. and 1800° C. The glass layer **16** is a low melting point glass material, wherein the glass layer **16** has a melting point between 300° C. and 900° C., 800° C. and 1300° C., between 900° C. and 1600° C., between 1000° C. and 1850° C., or between 1000° C. and 2000° C., wherein the melting point may smaller than 1500° C. Furthermore, there is a few bubbles or no bubble in glass layer **16**, for example, there is zero to 3 bubbles in one cubic meter of the glass layer **16**, 1 to 10 bubbles in one cubic meter of the glass layer **16**, 5 to 30 bubbles in one cubic meter of the glass layer **16** or 20 to 60 bubbles in one cubic meter of the glass layer **16**, wherein the bubble has a diameter between 0.0001 and 0.001 centimeters, between 0.001 and 0.05 centimeters, between 0.05 and 0.1 centimeters or between 0.05 and 0.5 centimeters. The glass layer **16** may be removed bubbles through multiple processes of a laminating process, a squeezing process and a heating process.

Next, referring to FIG. **7***l*, the mold **23** is removed and cut the glass layer **16** along a cutting line **16***a* to remove the fixing metal plate **150**, the fixing metal plate **152**, the first portion **71** of the first metal plate **7**, the second portion **73** of the first metal plate **7** and two the third metal plates **11**, and then the column **25** is produced, showed in the FIG. **7***m*.

Next, referring to FIG. **7***n*, cutting the column **25** to produce multiple first substrates **20**, wherein the first substrate **20** has a thickness between 20 and 100 micrometers, between 50 and 150 micrometers, between 100 and 300 micrometers or between 150 and 2000 micrometers or greater than 1000 micrometers. The first substrates **20** may be made a planarization process using a suitable process, such as a chemical mechanical polishing (CMP) procedure, mechanical grinding, or laser drilling.

Next, referring to FIG. **7***o*, the first substrate **20** comprises multiple second substrates **22**. The second substrates **22** are well-regulated an array in the first substrate **20**. Each of the second substrates has multiple metal plugs **21**, wherein the metal plug **21** is formed from the non-circular metal traces **752**. The metal plug **21** has the same material, structure and shape with the non-circular metal traces **752**. A first pitch **21***a* and a second pitch **21***b* are between the metal plugs **21**, wherein the first pitch **21***a* is controlled or the same-2 by a distance of the gap **754** and wherein the second pitch **21***b* is controlled by a distance of adjacent the non-circular traces **752**.

Next, referring to FIGS. **7***p*-**7***r*, the metal plugs **21** may be arranged in different types, such as FIG. **7***p*, the metal plugs **21** are arranged on the side portions of the second substrate **22**, or such as FIG. **7***q*, the metal plugs **21** are arranged on the side portions and center portion of the second substrate **22**, or such as FIG. **7***r*, some portions of the second substrate **22** are not arranged the metal plugs **21**.

FIG. **8***a* illustrates a cross-section view of the second substrate **22** illustrates a cross-section view of the metal plug **21**. The second substrate **22** comprises an amorphous solid glass layer/body **16** and multiple metal plugs **21**, wherein the amorphous solid glass layer/body **16** having a top surface and an opposing bottom surface and the metal plugs **21** extending through the amorphous solid glass layer/body **16** beginning at the top surface and ending at the bottom surface. The top surface of the metal plugs **21** are the same area as the bottom surface of the metal plugs **21**.

Please referring FIG. **8***b*, the top surface of the metal plugs **21** and the top surface of the amorphous solid glass layer/body **16** are substantially coplanar. The bottom surface of the metal plugs **21** and the bottom surface of the amorphous solid glass layer/body **16** are substantially coplanar.

Please referring FIG. **8***c*, the top surface of the metal plugs **21** comprises a top surface of the metal traces **6**/metal traces **752** and a top surface of the first covering layer **6***a* are substantially coplanar with the top surface of the amorphous solid glass layer/body **16**. The bottom surface of the metal plugs **21** comprises a bottom surface of the metal traces **6**/metal traces **752** and a bottom surface of the first covering layer **6***a* are substantially coplanar with the bottom surface of the amorphous solid glass layer/body **16**.

Please referring FIG. **8***d*, the top surface of the metal plugs **21** comprises a top surface of the metal traces **6**/metal traces **752**, a top surface of the first covering layer **6***a* and a top surface of the second covering layer **6***b* are substantially coplanar with the top surface of the amorphous solid glass layer/body **16**. The bottom surface of the metal plugs **21** comprises a bottom surface of the metal traces **6**/metal traces **752**, a bottom surface of the first covering layer **6***a* and a bottom surface of the second covering layer **6***b* are substantially coplanar with the bottom surface of the amorphous solid glass layer/body **16**.

FIG. **9***a*-FIG. **9***t* illustrate a process to form multiple traces on a top surface and a bottom surface of the first substrate **20**.

Next, referring to FIG. **9***a*, a first dielectric layer **24** is formed on the top surface of the first substrate **20**, wherein the first dielectric layer **24** may include or maybe a layer of silicon oxide (such as SiO_2), silicon nitride (such as Si_3N_4), silicon oxynitride (such as SiON), silicon oxycarbide (such as SiOC), phosphosilicate glass (PSG), silicon carbon nitride (such as SiCN), low k dielectric layer (K between 0.5 and 3), or polymer (such as polyimide, benzocyclobutene (BCB), polybenzoxazole (PBO), poly-phenylene oxide (PPO), epoxy, or silosane). The first dielectric layer **24** may be formed or deposited using a suitable process. The first dielectric layer **24** has a thickness between 0.3 and 5 micrometers, between 2 and 10 micrometers, between 1 and 30 micrometers or greater than 30 micrometers.

Next, referring to FIG. **9***b*, multiple openings **24***a* are formed in the first dielectric layer **24** to expose the metal plugs **21**. The openings **24***a* may be formed in the first dielectric layer **24** by a suitable process, such as etching. The opening **24***a* has a width between 0.3 and 3 micrometers, between 0.5 and 8 micrometers, between 2 and 20 micrometers or between 2 and 50 micrometers.

Next, referring to FIG. **9***c*, a first metal layer **26** is formed on the first dielectric layer **24**, on the metal plugs **21** and in the openings **24***a*. The first metal layer **26** may include an adhesion/barrier layer, such as a layer of titanium, a titanium-tungsten alloy, titanium nitride, chromium, tantalum, tantalum nitride, nickel or nickel vanadium formed using a suitable process, such as a vacuum deposition, a Physical Vapor Deposition (PVD), a Plasma Enhanced Chemical Vapor Deposition (PECVD), a sputtering process or an electroplating process, with a thickness, e.g., between 1 nanometer and 2 micrometers, between 0.3 and 3 micrometers or between 0.5 and 10 micrometers.

Next, referring to FIG. **9***d*, a second metal layer **28** is formed on the first metal layer **26**. The second metal layer **28** maybe comprises copper, nickel, gold or aluminum formed using a suitable process, such as a vacuum deposition, a Physical Vapor Deposition (PVD), a Plasma Enhanced Chemical Vapor Deposition (PECVD), a sputtering process or an electroplating process, with a thickness, e.g., between 1 nanometer and 5 micrometers, between 1 and 5 micrometers or between 5 and 30 micrometers.

Next, referring to FIG. **9***e*, a photoresist layer **30** is formed on the second metal layer **28** by using a suitable process, such as a spin coating process or a lamination process. Next, a photo exposure process using a 1× stepper and a development process using a chemical solution can be employed to form multiple openings **30***a*, exposing the second metal layer **28**, in the photoresist layer. The photoresist layer **30** may have a thickness, e.g., between 3 and 50 micrometers, wherein the photoresist layer **30** may be a positive-type photo-sensitive resist layer or negative-type photo-sensitive resist layer.

Next, referring to FIG. **9***f*, remove the first metal layer **26** and the second metal layer **28** are under the openings **30***a* by using a suitable process, such as an etching process.

Next, referring to FIG. **9***g*, remove the photoresist layer **30** by using a clean process.

Next, referring to FIG. **9***h*, a second dielectric layer **32** is formed on the first dielectric layer **24** and on the second metal layer **28**, wherein the second dielectric layer **32** may include or may be a layer of silicon oxide (such as SiO_2), silicon nitride (such as Si_3N_4), silicon oxynitride (such as SiON), silicon oxycarbide (such as SiOC), phosphosilicate glass (PSG), silicon carbon nitride (such as SiCN), low k dielectric layer (K between 0.5 and 3), or polymer (such as polyimide, benzocyclobutene (BCB), polybenzoxazole (PBO), poly-phenylene oxide (PPO), epoxy, or silosane). The second dielectric layer **32** may be formed or deposited using a suitable process. The second dielectric layer **32** has a thickness between 0.3 and 5 micrometers, between 2 and 10 micrometers, between 1 and 30 micrometers or greater than 30 micrometers.

Next, referring to FIG. **9***i*, multiple openings **32***a* are formed in the second dielectric layer **32** to expose the second metal layer **28**. The openings **32***a* may be formed in the second dielectric layer **32** by a suitable process, such as etching. The opening **32***a* has a width between 0.3 and 3 micrometers, between 0.5 and 8 micrometers, between 2 and 20 micrometers or between 2 and 50 micrometers.

Next, referring to FIG. **9***j*, a third metal layer **34** is formed on the second dielectric layer **32**, on the second metal layer **28** and in the openings **32***a*. The third metal layer **34** may include an adhesion/barrier layer, such as a layer of titanium, a titanium-tungsten alloy, titanium nitride, chromium, tantalum, tantalum nitride, nickel or nickel vanadium formed using a suitable process, such as a vacuum deposition, a Physical Vapor Deposition (PVD), a Plasma Enhanced Chemical Vapor Deposition (PECVD), a sputtering process or an electroplating process, with a thickness, e.g., between 1 nanometer and 2 micrometers, between 0.3 and 3 micrometers or between 0.5 and 10 micrometers.

Next, referring to FIG. **9***k*, a fourth metal layer **36** is formed on the third metal layer **34**. The fourth metal layer **36** maybe comprises copper, nickel, gold or aluminum formed using a suitable process, such as a vacuum deposition, a

Physical Vapor Deposition (PVD), a Plasma Enhanced Chemical Vapor Deposition (PECVD), a sputtering process or an electroplating process, with a thickness, e.g., between 1 nanometer and 5 micrometers, between 1 and 5 micrometers or between 5 and 30 micrometers.

Next, referring to FIG. **9***l*, a photoresist layer **38** is formed on the fourth metal layer **36** by using a suitable process, such as a spin coating process or a lamination process. Next, a photo exposure process using a 1× stepper and a development process using a chemical solution can be employed to form multiple openings **38***a*, exposing the fourth metal layer **36**, in the photoresist layer. The photoresist layer **38** may have a thickness, e.g., between 3 and 50 micrometers, wherein the photoresist layer **38** may be a positive-type photo-sensitive resist layer or negative-type photo-sensitive resist layer.

Next, referring to FIG. **9***m*, remove the third metal layer **34** and the fourth metal layer **36** are under the openings **38***a* by using a suitable process, such as an etching process.

Next, referring to FIG. **9***n*, remove the photoresist layer **38** by using a clean process.

Next, referring to FIG. **9***o*, a third dielectric layer **40** is formed on the second dielectric layer **32** and on the fourth metal layer **36**, wherein the third dielectric layer **40** may include or maybe a layer of silicon oxide (such as SiO_2), silicon nitride (such as Si_3N_4), silicon oxynitride (such as SiON), silicon oxycarbide (such as SiOC), phosphosilicate glass (PSG), silicon carbon nitride (such as SiCN), low k dielectric layer (K between 0.5 and 3), or polymer (such as polyimide, benzocyclobutene (BCB), polybenzoxazole (PBO), poly-phenylene oxide (PPO), epoxy, or silosane). The third dielectric layer **40** may be formed or deposited using a suitable process. The third dielectric layer **40** has a thickness between 0.3 and 5 micrometers, between 2 and 10 micrometers, between 1 and 30 micrometers or greater than 30 micrometers.

Next, referring to FIG. **9***p*, multiple openings **40***a* are formed in the third dielectric layer **40** to expose the fourth metal layer **36**. The openings **40***a* may be formed in the third dielectric layer **40** by a suitable process, such as etching. The opening **40***a* has a width between 0.3 and 3 micrometers, between 0.5 and 8 micrometers, between 2 and 20 micrometers or between 2 and 50 micrometers.

Next, referring to FIG. **9***q*, a protecting layer **42** is formed in the openings **40***a*, on the third dielectric layer **40** and on the fourth metal layer **36**, which can protect the third dielectric layer **40** not to be damaged and the fourth metal layer **36** not be damaged and oxidized.

Next, referring to FIG. **9***r*, repeat the processes of FIG. **9***a*-FIG. **9***p* to form the first dielectric layer **24**, the first metal layer **26**, the second metal layer **28**, the second dielectric layer **32**, the third metal layer **34**, the fourth metal layer **36** and the third dielectric layer **40** on the bottom surface of the first substrate **20**.

Furthermore, referring to FIG. **9***s*, a passive device **44** may be formed in the first metal layer **28** and the second metal layer **36**, such as an inductor, a capacitor or a resistor.

Next, referring to FIG. **9***t*, multiple chips **46** and chips **56** set up over the third dielectric layer **40** through a flip-chip package process or a wire-bonding package process, wherein the chip **46** or **56** comprises may be a memory chip, such as NAND-Flash memory chip, Flash memory chip, DRAM chip, SRAM chip or SDRAM chip, a central-processing-unit (CPU) chip, a graphics-processing-unit (GPU) chip, a digital-signal-processing (DSP) chip, a base-band chip, a wireless local area network (WLAN) chip, a logic chip, an analog chip, a global-positioning-system (GPS) chip, a "Bluetooth" chip, or a chip including one or more of a CPU circuit block, a GPU circuit block, a DSP circuit block, a memory circuit block (such as DRAM circuit block, SRAM circuit block, SDRAM circuit block, Flash memory circuit block, or NAND-Flash memory circuit block), a baseband circuit block, a Bluetooth circuit block, a GPS circuit block, a MEMS chip, a COMS image sensor device, a WLAN circuit block, and a modem circuit block, from the semiconductor wafer.

The chips **46** are set up on the third dielectric layer **40** through a flip-chip package process, wherein the chip **46** comprises multiple metal pads **48** and multiple metal bumps **50** formed on the metal pads **48**. The metal pad **48** may be an electroplated copper pad, a damascene copper pad or an aluminum pad. The metal bump **50** comprises an adhesion/barrier metal layer formed on the metal pad **48**, an electroplated metal layer or an electro-less metal layer formed on the adhesion/barrier metal layer, wherein the adhesion/barrier metal layer comprises a titanium-containing layer, a chromium-containing layer, a tantalum-containing layer or a nickel layer, and the electroplated metal layer comprises a copper layer, a gold layer, a nickel layer, a tin-containing layer, a solder layer, a solder layer over a nickel layer and a copper layer, and the electro-less layer comprises a copper layer, a gold layer or a nickel layer. The electroplated metal layer has a thickness between 2 and 5 micrometers, between 5 and 30 micrometers or between 10 and 50 micrometers. The metal bumps **50** are connected to the fourth metal layer **36** exposed by the openings **40***a* through a solder layer **54**, wherein the solder layer **54** is formed on the fourth metal layer **36** exposed by the openings **40***a* or is a portion of the metal bump

50. An underfill layer **52** is formed between the chips **46** and the third dielectric layer **40**.

The chips **56** are set up over the third dielectric layer **40** through a polymer adhesion layer **60**, wherein the chip **56** comprises multiple metal pads **58**. The metal pad **58** may be an electroplated copper pad, a damascene copper pad or an aluminum pad. Multiple metal wires **62** are connected to the metal pads **58** and the fourth metal layer **36** exposed by the openings **40***a*, wherein the metal wires **62** comprises a gold wire, a copper wire, a metal alloy wire, a silver-containing wire, an aluminum-containing wire or gold-copper alloy wire. An underfill layer **64** is covered the chip **56**, the metal wires **62** and the metal pads **58**.

Multiple discrete passive components **66** set up on the third dielectric layer **40**, such as a discrete inductor, a discrete capacitor or a discrete resistor, wherein the discrete passive component **66** comprises a multiple metal pad **68**. The discrete passive components **66** mounted on the third dielectric layer **40** through a solder layer **70**.

Next, referring to FIG. **9***u*, multiple metal bumps **72** are formed on the bottom surface of the substrate **20**.

FIG. **9***v* is disclosed some structures of metal bump **72**.

Lift side: 1st type of structures of metal bump **72** comprises an adhesion/barrier metal layer **61** formed on the metal pad **48**, a metal seed layer **63** formed on the adhesion/barrier metal layer **61**, an electroplated metal layer **65** formed on the metal seed layer **63** and a solder layer **67** formed on the electroplated metal layer **65**, wherein the adhesion/barrier metal layer **61** comprises a titanium-containing layer, a chromium-containing layer, a tantalum-containing layer or a nickel layer, wherein the first electroplated metal layer **65** comprises a copper layer, a gold layer, a nickel layer, wherein the solder layer **67** can be formed by screen plating, ball mounting, or an electroplating process, such as gold-tin

alloy, tin-silver alloy, tin-silver-copper alloy, indium, tin-bismuth alloy, or other lead-free alloy. Lead alloy solders can also be used but may be less desirable in some embodiments due to toxicity considerations. The adhesion/barrier metal layer **61** has a thickness between 0.05 and 2 micrometers. The metal seed layer **63** has a thickness between 0.05 and 2 micrometers. The first electroplated metal layer **65** has a thickness between 1 and 5 micrometers, between 2 and 8 micrometers or between 5 and 20 micrometers. The solder layer **67** has a thickness between 30 and 80 micrometers, between 50 and 100 micrometers, between 80 and 150 micrometers or between 120 and 350 micrometers.

Right side: 2nd type of structure of metal bump **72** comprises an adhesion/barrier metal layer **61** formed on the metal pad **48**, a metal seed layer **63** formed on the adhesion/barrier metal layer **61**, a first electroplated metal layer **65** formed on the metal seed layer **63** and a second electroplated metal layer **69** formed on the first electroplated metal layer **65**, wherein the adhesion/barrier metal layer **61** comprises a titanium-containing layer, a chromium-containing layer, a tantalum-containing layer or a nickel layer, wherein the first electroplated metal layer **65** comprises a copper layer, a gold layer, a nickel layer, wherein the second electroplated metal layer **69** comprises a copper layer, a gold layer, a nickel layer. The adhesion/barrier metal layer **61** has a thickness between 0.05 and 2 micrometers. The metal seed layer **63** has a thickness between 0.05 and 2 micrometers. The first electroplated metal layer **65** has a thickness between 1 and 5 micrometers, between 2 and 4 micrometers, between 5 and 15 micrometers or between 10 and 25 micrometers. The second electroplated metal layer **69** has a thickness between 1 and 5 micrometers, between 2 and 4 micrometers, between 10 and 30 micrometers or between 20 and 60 micrometers.

Furthermore, referring to FIG. **9***w*, the chips **46** may be set up on the bottom surface of the first substrate **20**.

Furthermore, referring to FIG. **9***x*, the chip **46** may be replaced a 3D IC chip package, wherein the chip **46** comprises a multiple metal pad **48** formed on the top and bottom surface. The metal pads **48** of the top surface of the chip **46** are connected to the metal pads **48** of the bottom surface of the chip **46** through multiple through-silicon-via metal layers. A chip **47** is connected to the 3D IC chip **46** through the flip-chip package process, wherein the chip **47** comprises multiple metal pads **49**, wherein the metal pad **49** may be an electroplated copper pad, a damascene copper pad or an aluminum pad. The metal pads **49** are connected to the metal pads **48** through a solder layer **51**.

FIG. **9***y*, illustrates a top view of the first substrate **20**. FIG. **9***u*-FIG. **9***w* illustrate a cross-section view of Line L-L' in FIG. **9***y*. Multiple the chips **46**, the chips **56** and the passive components **66** may also be provided in or on the first substrate **20**.

Next, cutting the first substrate **20** to produce multiple second substrates **22**.

FIG. **10***a*-FIG. **10***j* illustrate a damascene process to form the first metal layer **26**, the second metal layer **28**, the third metal layer **34** and the fourth metal layer **36** on a top surface and a bottom surface of the first substrate **20**.

Referring to FIG. **10***a*, the dielectric layers **24** in FIG. **9***a* include two dielectric layers **80** and **82**. The dielectric layer **80** is formed on the dielectric layer **82** by a chemical vapor deposition (CVD) process or a spin-on coating process, wherein each of the dielectric layers **80** and **82** may be composed of a low-K oxide layer with a thickness of between 0.3 and 5 μm, and preferably of between 0.5 and 3 μm, and an oxynitride layer on the low-K oxide layer, of a low-K polymer layer with a thickness of between 0.3 and 5 μm, and preferably of between 0.5 and 3 μm, and an oxynitride layer on the low-K polymer layer, of a low-K oxide layer with a thickness of between 0.3 and 5 μm, and preferably of between 0.5 and 3 μm, and a nitride layer on the low-K oxide layer, of a low-K polymer layer with a thickness of between 0.3 and 5 μm, and preferably of between 0.5 and 3 μm, and a nitride layer on the low-K polymer layer, or of a low-K dielectric layer with a thickness of between 0.3 and 5 μm, and preferably of between 0.5 and 3 μm, and a nitride-containing layer on the low-K dielectric layer. Next, referring to FIG. **10***b*, a photoresist layer **84** is formed on the dielectric layer **82**, an opening **84***a* in the photoresist layer **84** exposing the dielectric layer **82**. Next, referring to FIG. **10***c*, the dielectric layer **82** under the opening **84***a* is removed by a dry etching method to form a trench in the dielectric layer **82** exposing the dielectric layer **80**. Next, referring to FIG. **10***d*, after forming the trench in the dielectric layer **82**, the photoresist layer **84** is removed. Next, referring to FIG. **10***e*, a photoresist layer **86** is formed on the dielectric layer **82** and on the dielectric layer **80** exposed by the trench, an opening **86***a* in the photoresist layer **86** exposing the dielectric layer **80** exposed by the trench. Next, referring to FIG. **19***f*, the dielectric layer **80** under the opening **86***a* is removed by a dry etching method to form a via **80***a* in the dielectric layer **80** exposing the metal plugs **21** in the substrate **20**. Next, referring to FIG. **10***g*, after forming the via **80***a* in the dielectric layer **80**, the photoresist layer **86** is removed. Thereby, an opening **88** including the trench and the via **80***a* is formed in the dielectric layers **82** and **80**. Next, referring to FIG. **10***h*, an adhesion/barrier layer **90** having a thickness of between 0.1 and 3 micrometers is formed on the metal plugs **21** exposed by the opening **88**, on the sidewalls of the opening **88** and on the top surface of the dielectric layer **82**. The adhesion/barrier layer **90** can be formed by a sputtering process or a chemical vapor deposition (CVD) process. The material of the adhesion/barrier layer **90** may include titanium, titanium nitride, a titanium-tungsten alloy, tantalum, tantalum nitride, or a composite of the abovementioned materials. For example, the adhesion/barrier layer **90** may be formed by sputtering a tantalum layer on the metallization structure exposed by the opening **88**, on the sidewalls of the opening **88** and on the top surface of the dielectric layer **82**. Alternatively, the adhesion/barrier layer **90** may be formed by sputtering a tantalum-nitride layer on the metallization structure exposed by the opening **88**, on the sidewalls of the opening **88** and on the top surface of the dielectric layer **82**. Alternatively, the adhesion/barrier layer **90** may be formed by forming a tantalum-nitride layer on the metallization structure exposed by the opening **88**, on the sidewalls of the opening **88** and on the top surface of the dielectric layer **82** by a chemical vapor deposition (CVD) process. Next, referring to FIG. **10***i*, a seed layer **92**, made of copper, having a thickness of between 0.1 and 3 micrometers is formed on the adhesion/barrier layer **90** using a sputtering process or a chemical vapor deposition (CVD) process, and then a copper layer **94** having a thickness of between 0.5 and 5 μm, and preferably of between 1 and 2 μm, is electroplated on the seed layer **92**. Next, referring to FIG. **10***j*, the copper layer **94**, the seed layer **92** and the adhesion/barrier layer **90** outside the opening **88** in the dielectric layers **82** and **80** are

removed using a chemical mechanical polishing (CMP) process until the top surface of the dielectric layer **82** is exposed to an ambient.

FIG. **11***a*-FIG. **11***i* illustrate an embossing process to form the first metal layer **26**, the second metal layer **28**, the third metal layer **34** and the fourth metal layer **36** on a top surface and a bottom surface of the first substrate **20**.

Referring to FIG. **11***a*, the metal plugs **21** are in the glass layer **16** of the first substrate **20**, and the opening **96***a* in the dielectric layer **96** exposes the metal plugs **21**.

Referring to FIG. **11***a*, a polymer layer **98** can be formed on the dielectric layer **96**, and at least one opening **98***a* is formed in the polymer layer **98** by patterning the polymer layer **98** to expose at least one metal trace **6**, as shown in FIG. **11***b* and FIG. **11***c*. The metal plugs **21** may include a center portion exposed by an opening **98***a* and a peripheral portion covered with the polymer layer **98**, as shown in FIG. **11***b*. Alternatively, the opening **98***a* may expose the entire upper surface of the metal plugs **21** exposed by the opening **96***a* in the dielectric layer **96** and further may expose the upper surface of the dielectric layer **96** near the metal trace **6**, as shown in FIG. **11***c*.

The material of the polymer layer **98** may include benzocyclobutane (BCB), polyimide (PI), polyurethane, epoxy resin, a parylene-based polymer, a solder-mask material, an elastomer, or a porous dielectric material. The polymer layer **98** has a thickness of between 3 and 25 m or between 5 and 50 micrometers.

The polymer layer **98** can be formed by a spin-on coating process, a lamination process or a screen-printing process. Below, the process of forming a patterned polymer layer **98** is exemplified with the case of spin-on coating a polyimide layer on the dielectric layer **96** and then patterning the polyimide layer.

Referring to FIG. **11***d*, an adhesion/barrier layer **100** having a thickness of between 0.1 and 3 micrometers, and preferably between 0.5 and 2 micrometers, is formed on the polymer layer **98** and on the metal plugs **21**. The adhesion/barrier layer **100** may be a titanium-tungsten-alloy layer, tantalum-containing layer, a chromium-containing layer or a titanium-nitride layer. The adhesion/barrier layer **100** may be formed by a sputtering method, an evaporation method, or a chemical vapor deposition (CVD) method.

Referring to FIG. **11***e*, a photoresist layer **102** can be formed on the adhesion/barrier layer **100** by a spin coating process or a lamination process. Referring to FIG. **11***f*, the photoresist layer **102** is patterned with the processes of exposure, development, etc., to form a photoresist opening **102***a* on the above-mentioned adhesion/barrier layer **100** over the metal plugs **21** exposed by the opening **98***a*.

Referring to FIG. **11***g*, an electroplated metal layer **104** is formed on the adhesion/barrier layer **100** in the opening **102***a*, wherein the electroplated metal layer **104** comprises a copper layer, gold layer, a nickel layer, has a thickness between 2 and 10 micrometers, between 5 and 20 micrometers or between 5 and 35 micrometers.

Referring to FIG. **11***h*, removing the photoresist layer **102**.

Referring to FIG. **11***i*, the above-mentioned adhesion/barrier layer **100** not under the electroplated metal layer **104** is removed with a dry etching method or a wet etching method. For example, the adhesion/barrier layer **100** made of titanium, titanium-tungsten alloy, titanium nitride, tantalum or tantalum nitride, not under the electroplated metal layer **104** is removed with a reactive ion etching (RIE) process.

First Application: Please referring to FIG. **12**, the second substrates **22** is connected to a OLED display substrate through COG bonding process, wherein the OLED display substrate comprises a first glass substrate **106**, a second glass substrate **108**, an organic light-emitting diodes layer **110** (or a polymer light-emitting diodes layer, PLED layer) between the first glass substrate **106** and the second glass substrate **108** and multiple transparent electrodes **114**. The metal bumps **72** are connected to the transparent electrodes **114** through an anisotropic conductive film (ACF) layer **116**, wherein the ACF layer **116** comprises multiple conductive particles **117**, such as nickel (Ni) particles, gold (Au) particles, nickel-gold alloy particles, silver-tin alloy particles, silver particles, gold plated particles, silver plated particles or nickel plated particles. The OLED display substrate comprises multiple OLED display panels. The OLED display substrate may comprise a touch screen function. A least distance **106***a* between a centerline of the metal bump **72** and a boundary of the glass substrate **106** is between 3 micrometers and 10 micrometers, 5 micrometers and 15 micrometers, 10 micrometers and 25 micrometers or 20 micrometers and 40 micrometers.

Next, cutting the second substrates **22** and the OLED display substrate to produce multiple package units.

Second Application: Furthermore, the OLED display substrate can be replaced with a Micro Electro Mechanical Systems (MEMS) display substrate. Please referring to FIG. **13**, the second substrates **22** is connected to a MEMS display substrate through COG bonding process, wherein the MEMS display substrate comprises a first glass substrate **106**, a MEMS layer **109** and multiple transparent electrodes **114** formed on the first glass substrate **106**. The metal bumps **72** are connected to the transparent electrodes **114** through an anisotropic conductive film (ACF) layer **116**, wherein the ACF layer **116** comprises multiple conductive particles **117**, such as nickel (Ni) particles, gold (Au) particles, nickel-gold alloy particles, silver-tin alloy particles, silver particles, gold plated particles, silver plated particles or nickel plated particles. The MEMS display substrate comprises multiple MEMS display panels. The MEMS display substrate may comprise touch screen function. A least distance **106***a* between a centerline of the metal bump **72** and a boundary of the glass substrate **106** is between 3 micrometers and 10 micrometers, 5 micrometers and 15 micrometers, 10 micrometers and 25 micrometers or 20 micrometers and 40 micrometers.

Next, cutting the second substrates **22** and the MEMS display substrate to produce multiple package units.

Third application: Please refer to FIG. **14**, multiple LED devices **122** are packaged on the bottom surface of the second substrates **22**. The second substrates **22** is connected to a LCD display substrate through COG bonding process, wherein the LCD display substrate comprises a first glass substrate **106**, a second glass substrate **108**, and a transistor liquid crystal display layer **111** between the first glass substrate **106** and the second glass substrate **108** and multiple transparent electrodes **114**. The metal bumps **72** are connected to the electrodes **114** through an anisotropic conductive film (ACF) layer **116**, wherein the ACF layer **116** comprises multiple conductive particles **117**, such as nickel (Ni) particles, gold (Au) particles, nickel-gold alloy particles, silver-tin alloy particles, silver particles, gold plated particles, silver plated particles or nickel plated particles. The LCD display substrate comprises multiple LCD display panels. The LCD display substrate may comprises a touch screen function, wherein the LCD display substrate comprises an in-cell TFT LCD substrate. There are multiple optical layers **128** between the second substrates **22** and LCD display substrate, such as a diffuser sheet layer, a prism

sheet layer, a diffuser layer (or diffuser plate) and a reflector layer. A least distance **106***a* between a centerline of the metal bump **72** and a boundary of the glass substrate **106** is between 3 micrometers and 10 micrometers, 5 micrometers and 15 micrometers, 10 micrometers and 25 micrometers or 20 micrometers and 40 micrometers.

Next, cutting the second substrates **22** and the LCD display substrate to produce multiple package units.

Fourth application: Referring to FIG. **15**, this structure of the fourth application is similar to the structure of the third application in FIG. **14**. The second substrates **22** is connected to a LCD display substrate through flip-chip bonding process, wherein the LCD display substrate comprises a first glass substrate **106** and a second glass substrate **108**, and a transistor liquid crystal display layer **111** and thin film transistor circuit layers (not shown) between the first glass substrate **106** and the second glass substrate **108**, wherein multiple transparent electrodes **114** on the bottom surface of the first glass substrate **106** and multiple metal plugs **113** in the first glass substrate **106**, wherein the multiple metal plugs **113** are connected to the transparent electrodes **114** respectively. The structure of the first glass substrate **106** can refer to the second substrates **22** in the invention. The metal bumps **72** are connected to the transparent electrodes **114** through a solder layer **107**, wherein the solder layer **107** comprises gold-tin alloy, tin-silver alloy, tin-silver-copper alloy, indium, tin-bismuth alloy, or other lead-free alloy. The LCD display substrate comprises multiple LCD display panels. The LCD display substrate may comprise touch screen function, wherein the LCD display substrate comprising an in-cell TFT LCD substrate. There are multiple optical layers **128** between the second substrates **22** and LCD display substrate, such as a diffuser sheet layer, a prism sheet layer, a diffuser layer (or diffuser plate) and a reflector layer. A least distance **106***a* between a centerline of the metal bump **72** and a boundary of the glass substrate **106** is between 30 micrometers and 100 micrometers, 50 micrometers and 150 micrometers, 100 micrometers and 250 micrometers or 50 micrometers and 300 micrometers.

Fifth application: Referring to FIG. **16**, this structure of the fifth application is similar to the structure of the fourth application in FIG. **14**. The organic light-emitting diodes layer **110** (or a polymer light-emitting diodes layer, PLED layer) is replaced with the liquid crystal display layer **111**. The second substrates **22** is connected to a OLED display substrate through flip-chip bonding process, wherein the OLED display substrate comprises a first glass substrate **106** and a second glass substrate **108**, and an organic light-emitting diodes layer **110** (or a polymer light-emitting diodes layer, PLED layer) and thin film transistor circuit layers (not shown) between the first glass substrate **106** and the second glass substrate **108**, wherein multiple transparent electrodes **114** on the bottom surface of the first glass substrate **106** and multiple metal plugs **113** in the first glass substrate **106**, wherein the multiple metal plugs **113** are connected to the transparent electrodes **114** respectively. The structure of the first glass substrate **106** can refer to the second substrates **22** in the invention. The metal bumps **72** are connected to the transparent electrodes **114** through a solder layer **107**, wherein the solder layer **107** comprises gold-tin alloy, tin-silver alloy, tin-silver-copper alloy, indium, tin-bismuth alloy, or other lead-free alloy. The OLED display substrate comprises multiple OLED display panels. The OLED display substrate may comprise touch screen function, wherein the OLED display substrate comprising an in-cell TFT OLED substrate. A least distance **106***a* between a centerline of the metal bump **72** and a boundary of the glass substrate **106** is between 30 micrometers and 100 micrometers, 50 micrometers and 150 micrometers, 100 micrometers and 250 micrometers or 50 micrometers and 300 micrometers.

Sixth application: Referring to FIG. **17***a*, the second substrates **22** can be a port of an OLED display substrate. The OLED display substrate comprises the second substrates **22** and the second glass substrate **108**, and an organic light-emitting diodes layer **110** (or a polymer light-emitting diodes layer, PLED layer), thin film transistor circuit layers (not shown) and transparent electrodes **114** between the second substrates **22** and the second glass substrate **108**, wherein the metal plugs **21** connected to transparent electrodes **114** through the first metal layer **26**. The OLED display substrate comprises multiple OLED display panels. The OLED display substrate may comprise touch screen function, wherein the OLED display substrate comprising an in-cell TFT OLED substrate.

Referring to FIG. **17***b*, the structure of the OLED display substrate comprises multiple thin film transistors circuits **700** and multiple organic light-emitting components **800** between the second substrates **22** and the second glass substrate **108**, wherein the thin film transistors circuit **700** comprises a buffer layer **702**, a first gate electrode **704***a* and a first source electrode **704***b* formed on the buffer layer **702**, a first insulating layer **706** formed on the first gate electrode **704***a*, the first source electrode **704***b* and the buffer layer **702**. An oxide semiconductor layer **710** is formed on the first insulating layer **706** over the first gate electrode **704***a* and the first source electrode **704***b*, wherein the oxide semiconductor layer **710** is connected to the first source electrode **704***b* through the opening in the first insulating layer **706**. A second insulating layer **712** is formed on the oxide semiconductor layer **710**. A second gate electrode **714***a* and a second source electrode **714***b* formed on the second insulating layer **712**, wherein the second source electrode **714***b* connected to the oxide semiconductor layer **710** through an opening in the second insulating layer **712**. A protection layer **716** is formed on the second gate electrode **714***a*, the second source electrode **714***b* and the second insulating layer **712**. The organic light-emitting component **800** formed on the protection layer **716** and connected to the second source electrode **714***b* through an opening in the protection layer **716**.

The oxide semiconductor layer **710** comprises a ZnO containing layer, wherein the ZnO containing layer can be doped with a group selected from the group constituted of at least one ionic: Gallium (Ga), indium (In), tin (Sn), zirconium (Zr), hafnium (Hf), cadmium (Cd), magnesium (Mg), vanadium (V). The first gate electrode **704***a*, the first source electrode **704***b*, the second gate electrode **714***a* and the second source electrode **714***b* are formed of a metal selected from the following groups: tungsten (W), titanium (Ti), molybdenum (Mo), silver (Ag), tantalum (Ta), aluminum (Al), copper (Cu), gold (Au), chromium (Cr) or niobium (Nb).

The organic light-emitting component **800** comprises an anode layer **802**, a cathode layer **804** and an organic light-emitting layer **806** between the anode layer **802** and the cathode layer **804**, wherein the anode layer **802** formed on the protection layer **716** and connected to the second source electrode **714***b*. A third insulating layer **808** formed on the protection layer **716** and the anode layer **802**, then formed a hole/opening in the third insulating layer **808** and on the anode layer **802**. Forming the organic light-emitting layer **806** in the opening and on the third insulating layer **808**, then formed the cathode layer **804** on the third insulating layer

808 and on the organic light-emitting layer 806. The anode layer 802 is connected to the metal plugs 21 via a conductive layer formed on the opening through the buffer layer 702, a first insulating layer 706 and second insulating layer 712. The cathode layer 804 is connected to the metal plugs 21 via a conductive layer formed on the opening through the buffer layer 702, the first insulating layer 706, the second insulating layer 712 and the third insulating layer 808. The buffer layer 702—the first insulating layer 706, the second insulating layer 712 and the third insulating layer 808 comprise a polyimide, polyamide, acryl resin, benzocyclobutene, phenol resin, oxide layer (buffer layer 702), nitride layer (buffer layer 702).

The anode layer 802 may contain one or more transparent materials such as indium tin oxide (ITO), indium zinc oxide (IZO), zinc oxide (ZnO), indium gallium oxide (IGO), aluminum zinc oxide (AZO) and In2O3, or non-transparent materials such as Ag, Mg, Al, Pt, Pd, Au, Ni, Nd, Ir, Cr, Li, Ca, Mo, Ti, W, MoW, and Al/Cu. The cathode layer 804 may contain one or more transparent materials such as indium tin oxide (ITO), indium zinc oxide (IZO), zinc oxide (ZnO), indium gallium oxide (IGO), aluminum zinc oxide (AZO) and In_2O_3.

The organic light-emitting layer 806 may include a hole transport layer (HTL) and a hole injection layer (HIL) stacked toward the pixel electrode (anode layer 802 or cathode layer 804), and an electron transport layer (ETL) and an electron injection layer (EIL) stacked toward the pixel electrode (anode layer 802 or cathode layer 804). Furthermore, various other layers may be stacked if required. Further, the light-emitting layer 806 comprises a carbazole biphenyl(CBP), (III)(bis(1-phenylisoquinoline)(acetylacetonate)iridium, PIQIr(acac)), (III)(bis(1-phenylquinoline)(acetylacetonate)iridium, PQIr(acac)), (III)(tris(1-phenylquinoline)iridium (PQIr), octaethylporphyrin platinum, PtOEP (III))(tris(dibenzoylmethane)(o-phenanthroline)europium(III), PED:Eu(DBM)3(Phen)), perylene, N,N'-Di(naphthalene-1-yl)-N,N'-diphenyl-benzidine, tris-8-hydroxyquinoline aluminum (PEDOT), copper phthalocyanine, CuPc, 4,4',4"-tris(N-(3-methylphenyl)-N-phenylamino)triphenylamine (MTDATA).

Referring to FIG. 18 and FIG. 19, an outward of display substrate produced from above first application to sixth application is an unframed display 119, wherein the unframed display 119 comprises a display area 119*a* has four edges 119*b*, wherein a gap between each edge 119*b* and one of four boundaries of the unframed display 119 has a least distance smaller than 15 micrometers, 20 micrometers, 30 micrometers, 50 micrometers, 100 micrometers, 150 micrometers or 200 micrometers. The unframed display 119 is installed in a shell 123 of a display device 125. Some components (not showed in drawings) can install in the display device 125 (or installed on the second substrates 22), for example, a speaker component, a battery component, a microphone component, a signal receiver component, a wireless signal receiver component, a wireless signal transmitter module.

Referring to FIG. 19, the display device 125 comprises multiple connecting ports 127 on the shell 123, wherein the connecting ports 127 comprise a signal connecting port, a power connecting port, and/or a ground connecting port. The display device 125 can connect to another one display device 125*b* to become a bigger display device 129, wherein the connecting ports 127 of the display device 125 are connected to the connecting ports 127 of the display device 125*b*. Multiple display devices 125 can be combined with a big display device, an advertising billboard. The display devices 125 can be used as a tile on the wall of the building. The display devices 125 can be a display unit on a surface of a magic cube.

The structure of the OLED display substrate disclosed in FIG. 12 and FIG. 16 can be referred to related specifications as above.

Those described above are the embodiments to exemplify the present disclosure to enable the person skilled in the art to understand, make and use embodiments of the present disclosure. This description, however, is not intended to limit the scope of the present disclosure. Any equivalent modification and variation according to the spirit of the present disclosure is to be also included within the scope of the claims stated below.

The components, steps, features, benefits and advantages that have been discussed are merely illustrative. None of them, nor the discussions relating to them, are intended to limit the scope of protection in any way. Numerous other embodiments are also contemplated. These include embodiments that have fewer, additional, and/or different components, steps, features, benefits and advantages. These also include embodiments in which the components and/or steps are arranged and/or ordered differently.

In reading the present disclosure, one skilled in the art will appreciate that embodiments of the present disclosure can be implemented in hardware, software, firmware, or any combinations of such, and over one or more networks. Suitable software can include computer-readable or machine-readable instructions for performing methods and techniques (and portions thereof) of designing and/or controlling the fabrication and design of integrated circuit chips according to the present disclosure. Any suitable software language (machine-dependent or machine-independent) may be utilized. Moreover, embodiments of the present disclosure can be included in or carried by various signals, e.g., as transmitted over a wireless radio frequency (RF) or infrared (IR) communications link or downloaded from the Internet.

Unless otherwise stated, all measurements, values, ratings, positions, magnitudes, sizes, and other specifications that are set forth in this specification, including in the claims that follow, are approximate, not exact. They are intended to have a reasonable range that is consistent with the functions to which they relate and with what is customary in the art to which they pertain. The scope of protection is limited solely by the claims. That scope is intended and should be interpreted to be as broad as is consistent with the ordinary meaning of the language that is used in the claims when interpreted in light of this specification and the prosecution history that follows and to encompass all structural and functional equivalents.

What is claimed is:

1. A chip package comprising:

a first polymer layer having a first surface and a second surface opposite to said first surface, wherein said first surface is substantially parallel to said second surface, wherein said first polymer layer has a thickness between 100 and 300 micrometers and has a coefficient of expansion between 3 and 10 ppm/° C.;

a first metal plug vertically in a first through via in said first polymer layer, wherein said first metal plug comprises a first copper layer, wherein the first copper layer contacts with a sidewall of said first through via;

a second metal plug vertically in a second through via in said first polymer layer, wherein said second metal plug comprises a second copper layer, wherein a top surface of said second metal plug and a top surface of said first metal plug are in the same horizontal plane;

a first interconnection scheme over said first surface, wherein said first interconnection scheme comprises a first metal interconnect over said first surface, a second metal interconnect over said first surface, a third metal interconnect over said first surface and a second polymer layer over said first, second and third metal interconnects, wherein said first metal interconnect is connected to said first metal plug, wherein said second metal interconnect is connected to said second metal plug, wherein said first metal interconnect comprises a first metal layer, a third copper layer on said first metal layer, and a fourth copper layer on said third copper layer;

a first metal bump over said first interconnection scheme and said second metal plug, wherein said first metal bump comprises a tin-containing layer; and

a first semiconductor chip under said first interconnection scheme, wherein said first semiconductor chip comprises a fourth metal interconnect on a first metal pad of said first semiconductor chip, wherein said fourth metal interconnect comprises a second metal layer on said first metal pad and a fifth copper layer over said second metal layer, wherein said fifth copper layer has a thickness between 5 and 30 micrometers, wherein said fourth metal interconnect is connected to said third metal interconnect.

2. The chip package of claim **1**, further comprising a passive component over said first interconnection scheme and connected to said first interconnection scheme through a solder layer.

3. The chip package of claim **1**, wherein said first interconnection scheme comprise a fifth metal interconnect across over a sidewall of the first semiconductor chip.

4. The chip package of claim **1**, further comprising a second semiconductor chip over said first interconnection scheme, wherein said second semiconductor chip comprises a second metal bump between said second semiconductor chip and said first interconnection scheme.

5. The chip package of claim **1**, wherein said first semiconductor chip comprises a central-processing-unit (CPU) circuit block and a graphics-processing-unit (GPU) circuit block.

6. The chip package of claim **1**, wherein said first semiconductor chip comprises a second metal pad on a top surface of said first semiconductor chip and a third metal pad on a bottom surface of said first semiconductor chip, wherein said second metal pad is connected to said third metal pad through a through-silicon-via metal layer.

7. The chip package of claim **1**, wherein said first interconnection scheme further comprises a fifth metal interconnect over said first metal interconnect and said second polymer layer, wherein said second polymer is between said first and fifth metal interconnects, wherein said fifth metal interconnect comprises a third metal layer, a sixth copper layer on said third metal layer, and a seventh copper layer on said sixth copper layer.

8. The chip package of claim **1**, further comprising a second interconnection scheme under said first polymer layer and on said second surface.

9. The chip package of claim **1**, wherein said first metal plugs has a top surface substantially coplanar with said first surface.

10. The chip package of claim **1**, wherein said first metal pad is an aluminum pad.

11. The chip package of claim **1**, further comprising a second semiconductor chip over said first interconnection scheme and connected to said first interconnection scheme through a second metal bump, wherein said second semiconductor chip has a height is between a backside surface of said second semiconductor chip and a top surface of said second polymer layer is smaller than a thickness of said first metal bump.

12. The chip package of claim **1**, further comprising a second semiconductor chip under said first semiconductor chip, wherein said first semiconductor chip comprises a second metal pad connected to a third metal pad of said second semiconductor chip through a solder layer, wherein said solder layer between said first and second semiconductor chips.

13. The chip package of claim **1**, further comprising a second semiconductor chip under said first semiconductor chip, wherein said first semiconductor chip comprises a second metal pad on a top surface of said first semiconductor chip, a third metal pad on a bottom surface of said first semiconductor chip and a through-silicon-via metal layer connects to said second metal pad, wherein said third metal pad is connected to a fourth metal pad of said second semiconductor chip.

14. The chip package of claim **1**, further comprising a third metal plug vertically in a third through via in said first polymer layer, wherein a pitch between said first and third metal plugs is between 200 and 1000 micrometers.

15. The chip package of claim **1**, wherein said first metal plug has a thickness between 100 and 300 micrometers.

16. A chip package comprising:

a first polymer layer having a first surface and a second surface opposite to said first surface, wherein said first surface is substantially parallel to said second surface, wherein said first polymer layer has a thickness between 100 and 300 micrometers;

a first metal plug vertically in a first through via in said first polymer layer, wherein said first metal plug comprises a first copper layer, wherein the first copper layer contacts with a sidewall of said first through via;

a second metal plug vertically in a second through via in said first polymer layer, wherein said second metal plug comprises a second copper layer, wherein a top surface of said second metal plug and a top surface of said first metal plug are in the same horizontal plane;

a first interconnection scheme over said first surface, wherein said first interconnection scheme comprises a first metal interconnect over said first surface, a second metal interconnect over said first surface and a second polymer layer over said first and second metal interconnects, wherein said first metal interconnect is connected to said first metal plug, wherein said first metal interconnect comprises a first metal layer, a third copper layer on said first metal layer, and a fourth copper layer on said third copper layer;

a first metal bump over said first interconnection scheme, wherein said first metal bump is connected to said first interconnection scheme through a first opening in said second polymer layer, wherein said first metal bump comprises a tin-containing layer;

a second metal bump over said first interconnection scheme, wherein said second metal bump is connected to said first interconnection scheme through a second opening in said second polymer layer;

a first semiconductor chip over said first interconnection scheme and between said first and second metal bumps;

a third metal bump between said first semiconductor chip and said first interconnection scheme, wherein said

third metal bump connected to said second metal interconnect through a third opening in said second polymer layer; and

a second semiconductor chip under said first interconnection scheme and said first semiconductor chip, wherein said first interconnection scheme is between said first and second semiconductor chips, wherein said second semiconductor chip comprises a central-processing-unit (CPU) circuit block and a graphics-processing-unit (GPU) circuit block.

17. The chip package of claim **16**, further comprising a third semiconductor chip over said first interconnection scheme.

18. The chip package of claim **16**, wherein said second semiconductor chip comprises a first metal pad on a top surface of said second semiconductor chip and a second metal pad on a bottom surface of said second semiconductor chip, wherein said first metal pad is connected to said second metal pad through a through-silicon-via metal layer.

19. The chip package of claim **16**, further comprising a third metal plug vertically in a third through via in said polymer layer, wherein a pitch between said first and third metal plugs is between 200 and 1000 micrometers.

20. The chip package of claim **16**, wherein said first polymer layer has a coefficient of expansion between 3 and 10 ppm/°C.

21. The chip package of claim **16**, further comprising a third semiconductor chip under said second semiconductor chip and multiple fourth metal bumps between said second and third semiconductor chips, wherein said second semiconductor chip comprises a first metal pad on a top surface of said second semiconductor chip and a second metal pad on a bottom surface of said second semiconductor chip, wherein said first metal pad is connected to said second metal pad through a through-silicon-via metal layer.

22. The chip package of claim **16**, further comprising a passive component over said first surface.

23. The chip package of claim **16**, wherein said first interconnection scheme comprise a third metal interconnect across over a sidewall of the second semiconductor chip.

24. The chip package of claim **16**, further comprising a third semiconductor chip under said first interconnection scheme, wherein said third semiconductor chip is a memory chip.

25. The chip package of claim **16**, wherein said second semiconductor chip comprises a third metal interconnect on a metal pad of said second semiconductor chip, wherein said third metal interconnect comprises a second metal layer on said metal pad and a fifth copper layer over said second metal layer, wherein said fifth copper layer has a thickness between 5 and 30 micrometers, wherein said third metal interconnect is connected to said a fourth metal interconnect of said first interconnection scheme.

26. The chip package of claim **16**, wherein a height is between a backside surface of said first semiconductor chip and a top surface of said second polymer layer is smaller than a thickness of said first metal bump.

27. The chip package of claim **16**, wherein said second semiconductor chip is coupled to said first semiconductor chip through said first interconnection scheme.

28. The chip package of claim **16**, wherein said first metal plug has a thickness between 100 and 300 micrometers.

* * * * *