US 20080031481A1

(19) United States

(12) Patent Application Publication

Warren et al.

(10) Pub. No.: US 2008/0031481 A1

(43) Pub. Date: Feb. 7, 2008

(54) PERSONAL LISTENING DEVICE

(75) Inventors: **Daniel Max Warren**, Geneva, IL (US); **Thomas Edward Miller**, Arlington Heights, IL (US); **Charles Bender King**, Chicago, IL (US); **Janice L. LoPresti**, Itasca, IL (US); **Gwendolyn P. Massingill**, Aurora, IL (US)

Correspondence Address:
FITCH EVEN TABIN AND FLANNERY
120 SOUTH LA SALLE STREET
SUITE 1600
CHICAGO, IL 60603-3406 (US)

(73) Assignee: **KNOWLES ELECTRONICS, LLC**, Itasca, IL (US)

(21) Appl. No.: **11/755,408**

(22) Filed: **May 30, 2007**

Related U.S. Application Data

(60) Provisional application No. 60/803,487, filed on May 30, 2006.

Publication Classification

(51) **Int. Cl.**
H04R 25/00 (2006.01)

(52) **U.S. Cl.** **381/322**

(57) **ABSTRACT**

A receiver module for a personal listening device to be fitted in the ear, on the ear, near the ear, or behind the ear, the receiver module having a movable armature, the receiver module comprises a motor assembly and a housing defining a chamber, the housing is made from a material that is corrosion resistant and is biocompatible to human skin contact. The receiver module further comprises at least one motor assembly directly disposed in the chamber. Optionally a communication link adapted to couple or decouple with the motor assembly. At least a portion of the communication link is disposed in the housing.

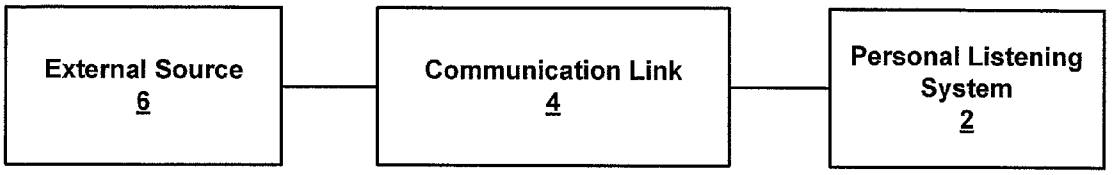

Samsung v. Zophonos
IPR2026-00084
Exhibit 1008

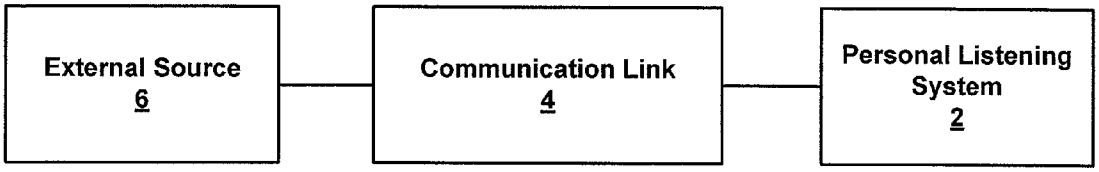

FIGURE 1

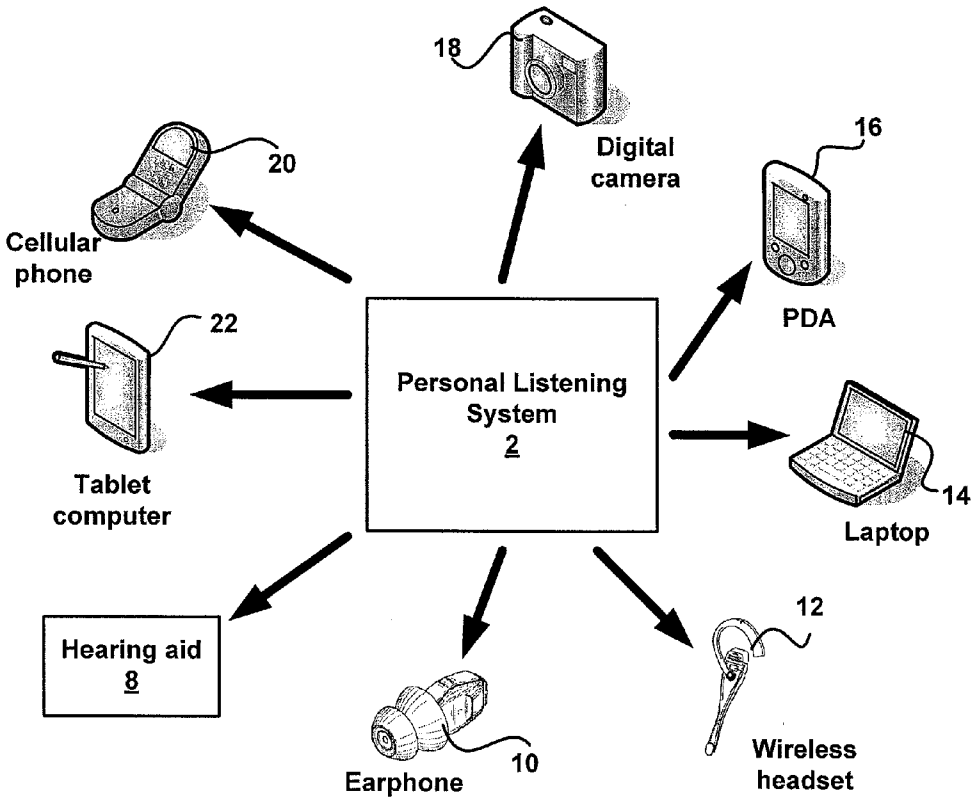

FIGURE 2

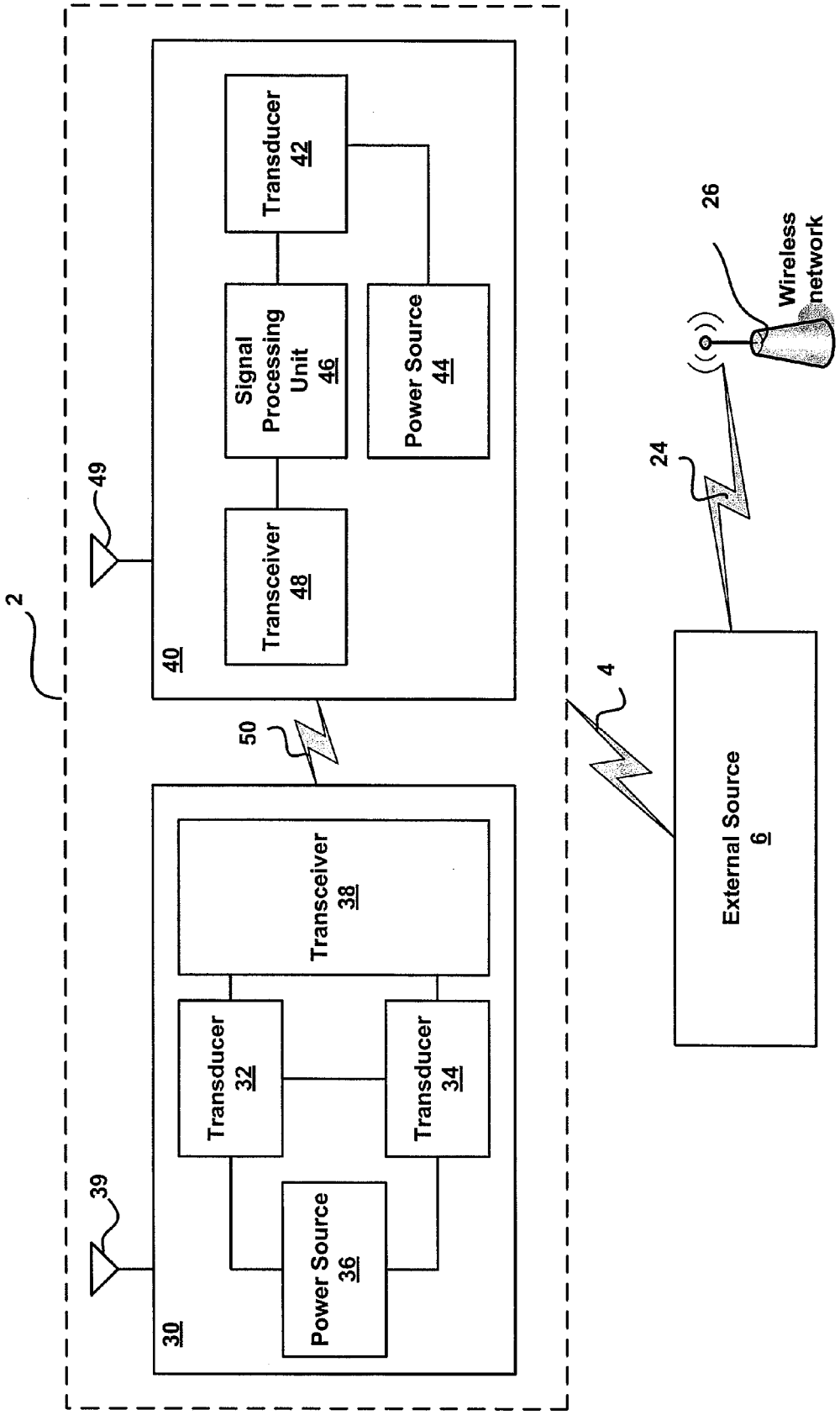
2
49
40
Transceiver 48
Signal Processing Unit 46
Transducer 42
Power Source 44
50
30
39
Transceiver 38
Transducer 32
Transducer 34
Power Source 36
4
External Source 6
24
26
Wireless network

FIGURE 3

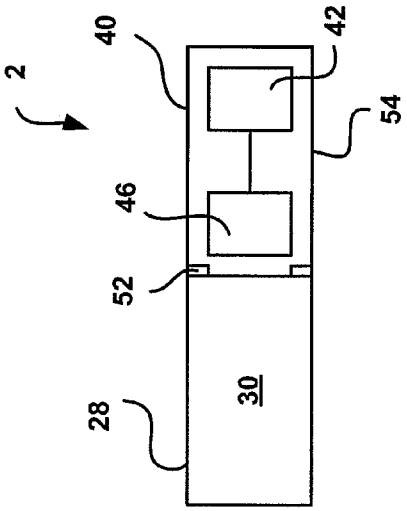

FIGURE 5

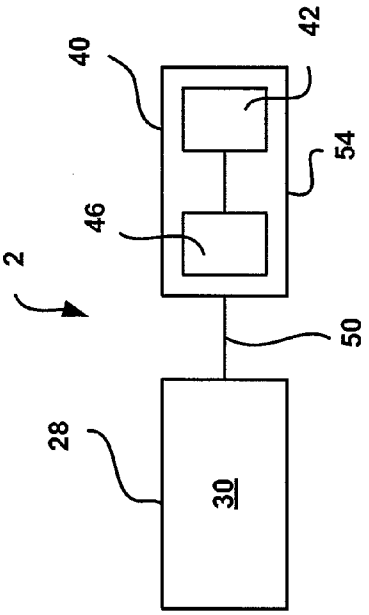

FIGURE 4

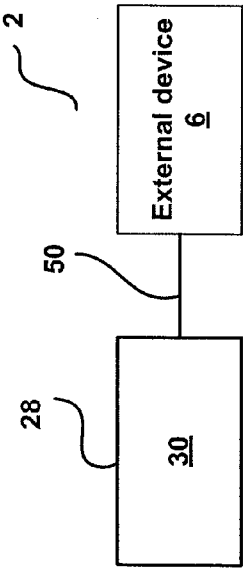

FIGURE 6

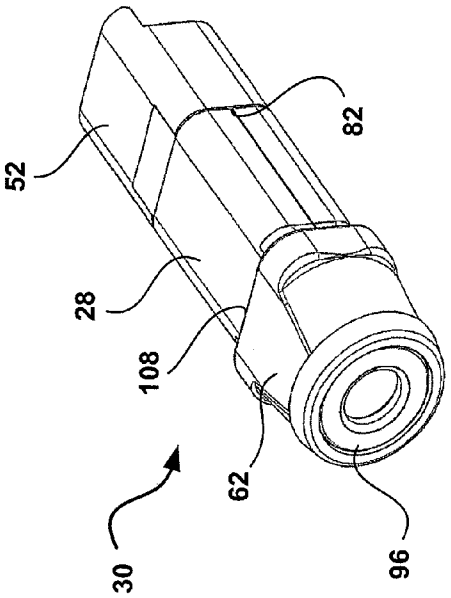

FIGURE 7A

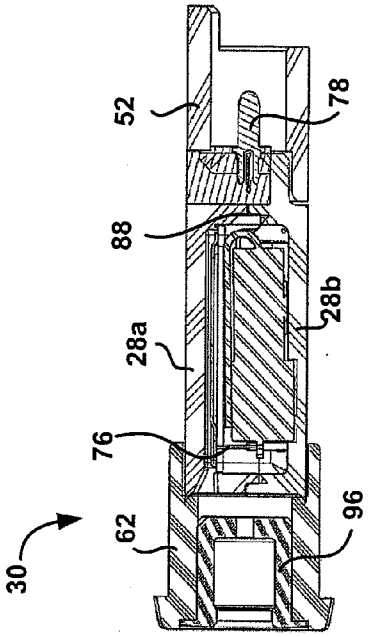

FIGURE 7C

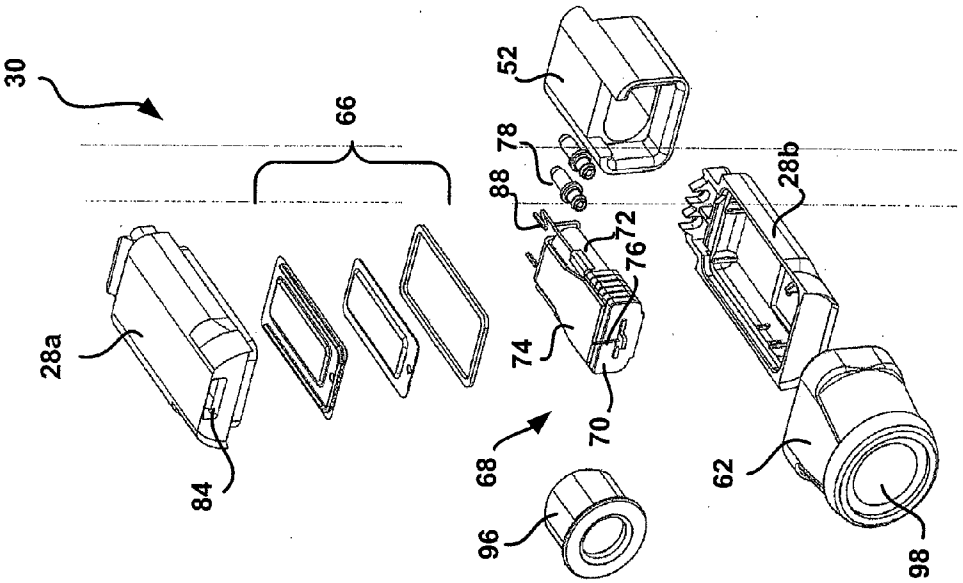

FIGURE 7B

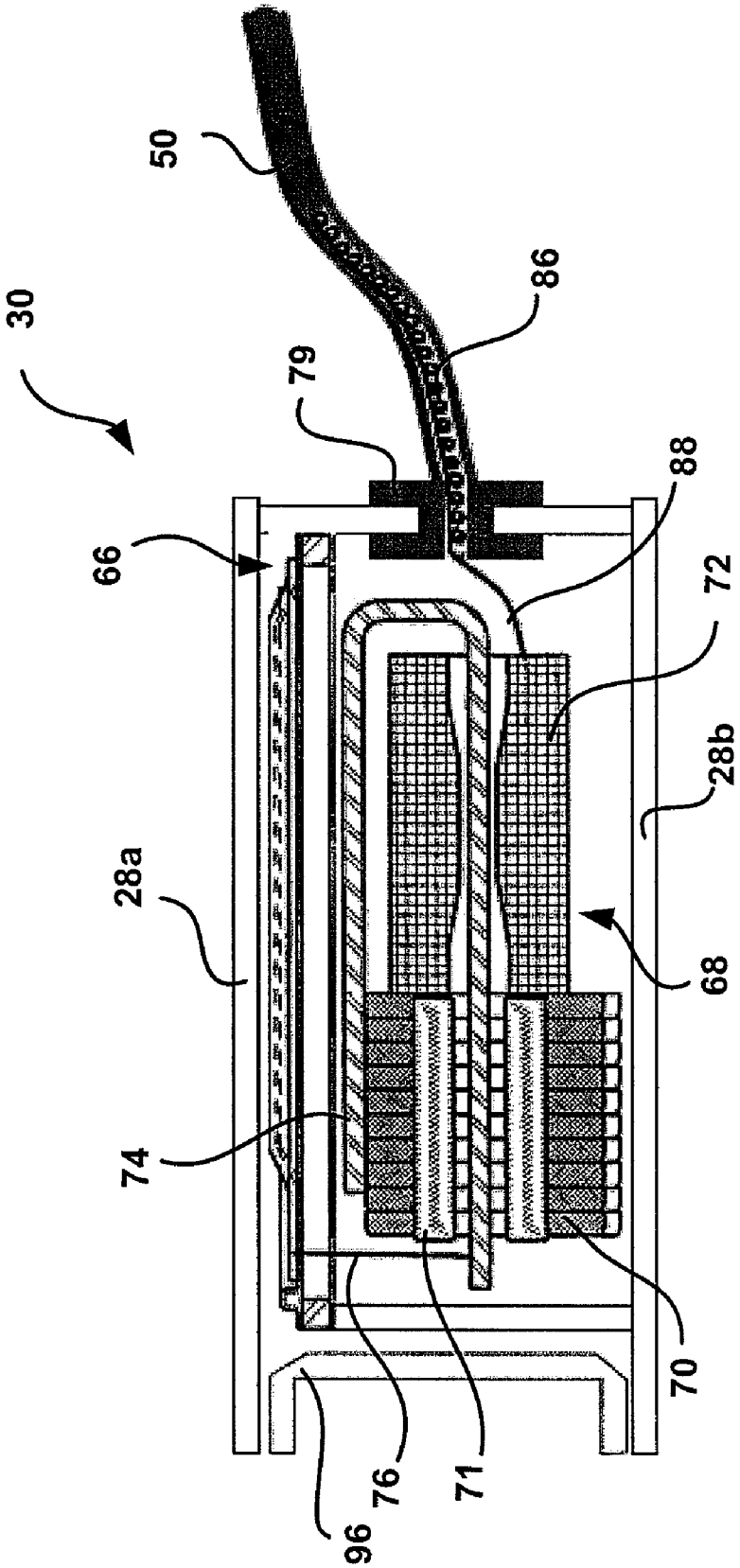

FIGURE 8

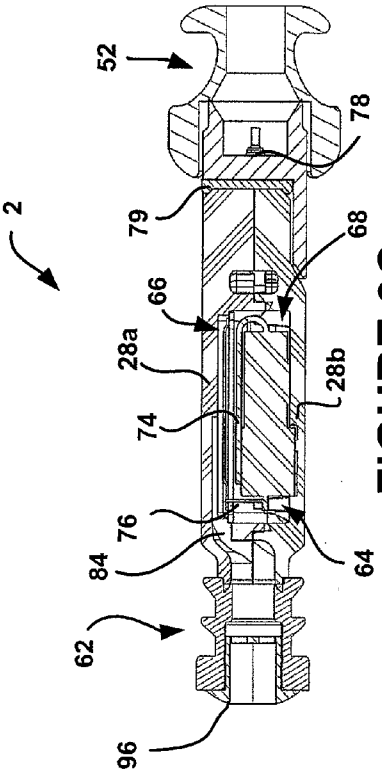

FIGURE 9C

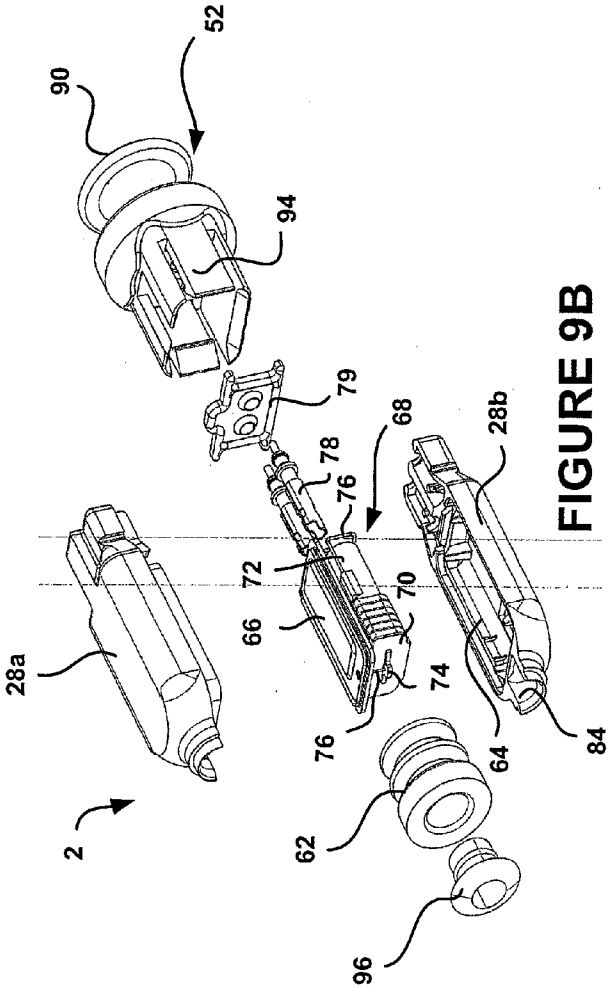

FIGURE 9B

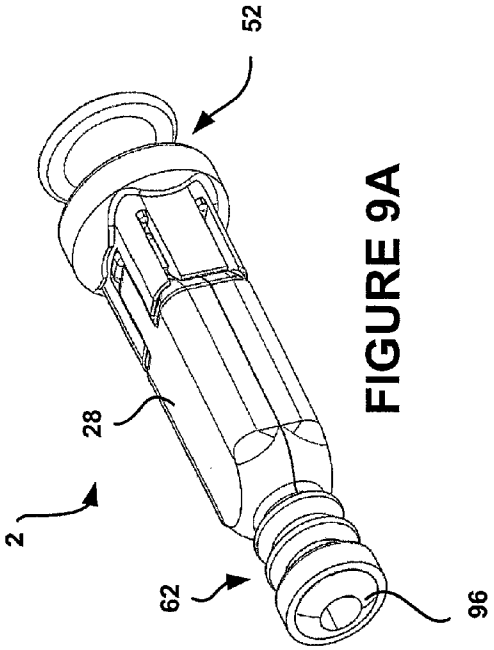

FIGURE 9A

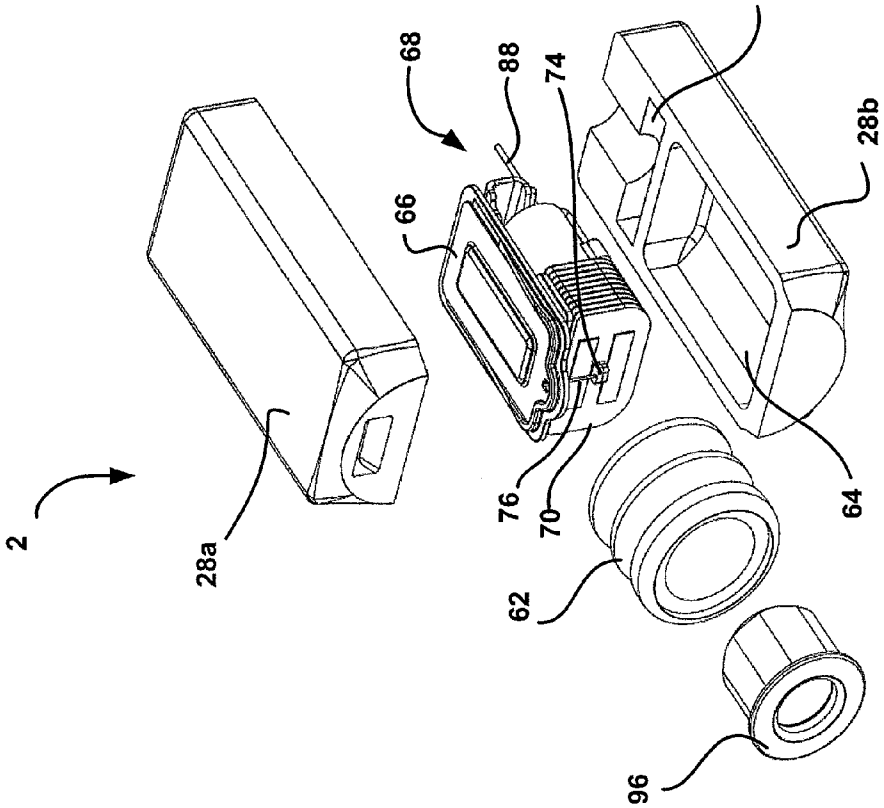

FIGURE 10B

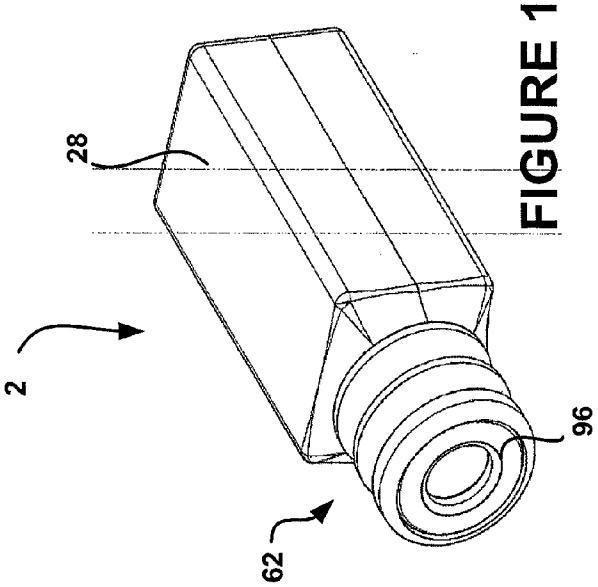

FIGURE 10A

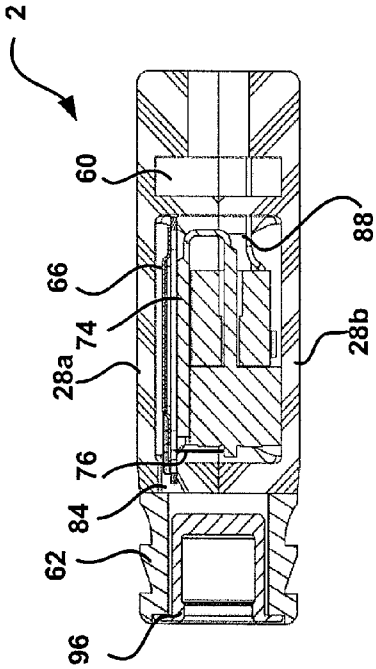

FIGURE 10C

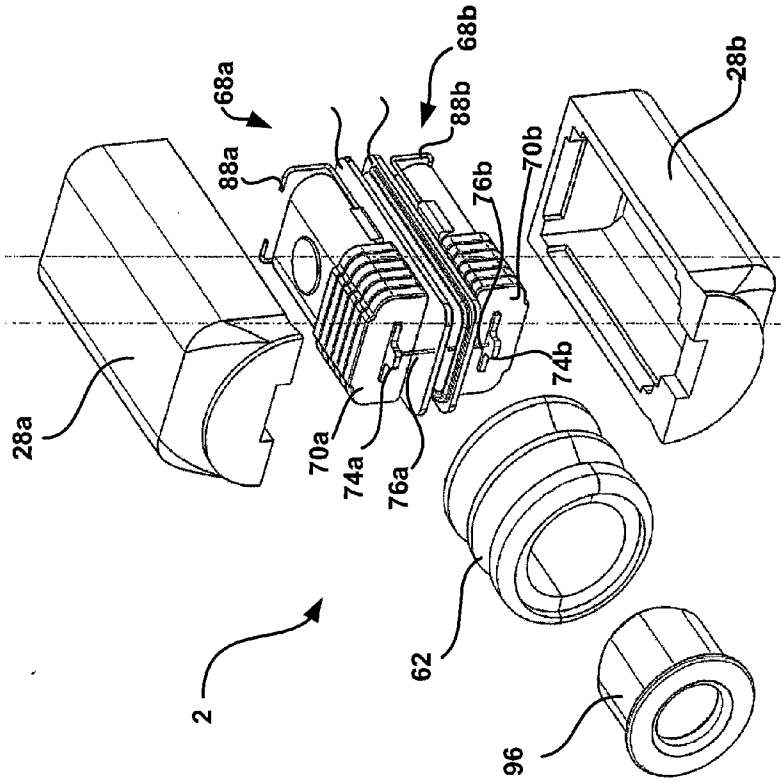

FIGURE 11B

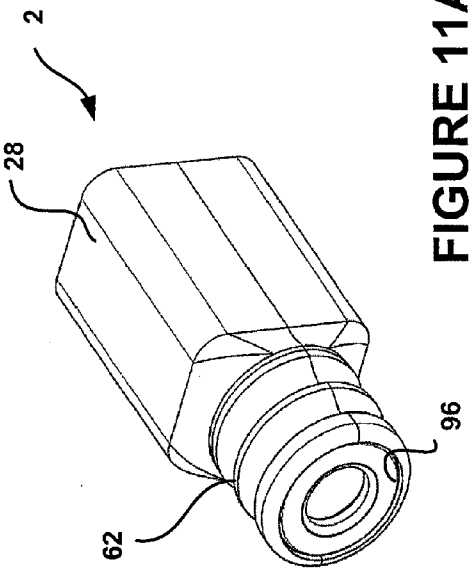

FIGURE 11A

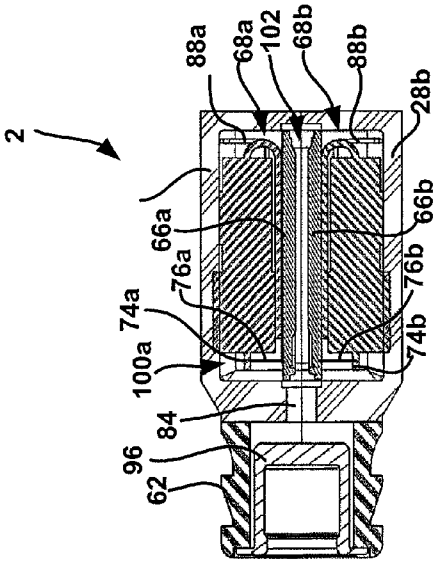

FIGURE 11C

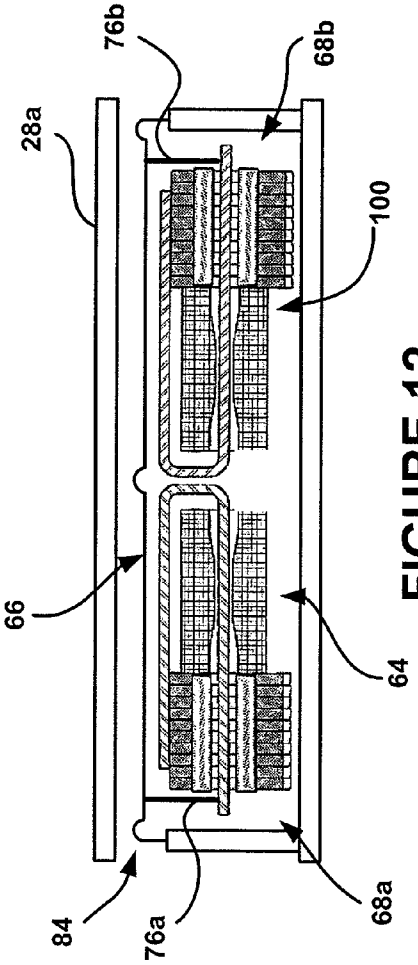

FIGURE 12

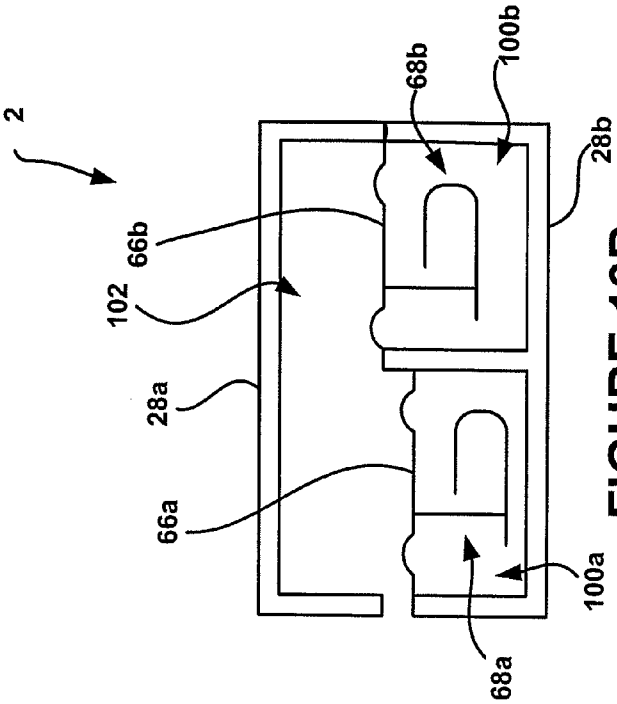

FIGURE 13B

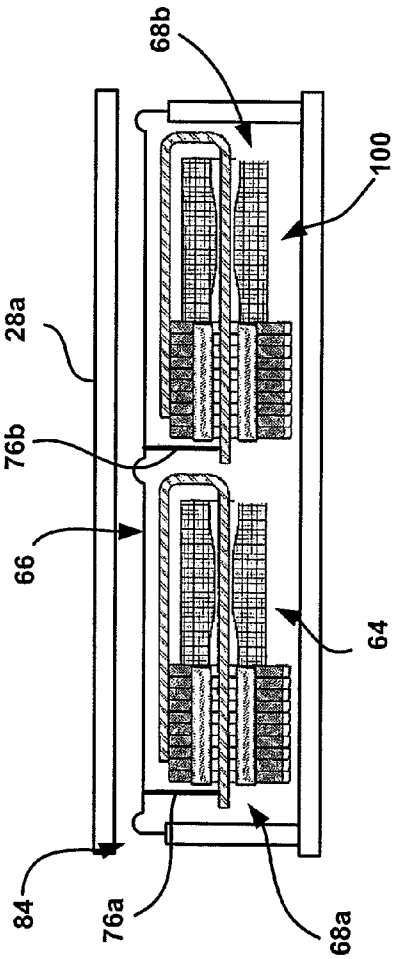

FIGURE 13A

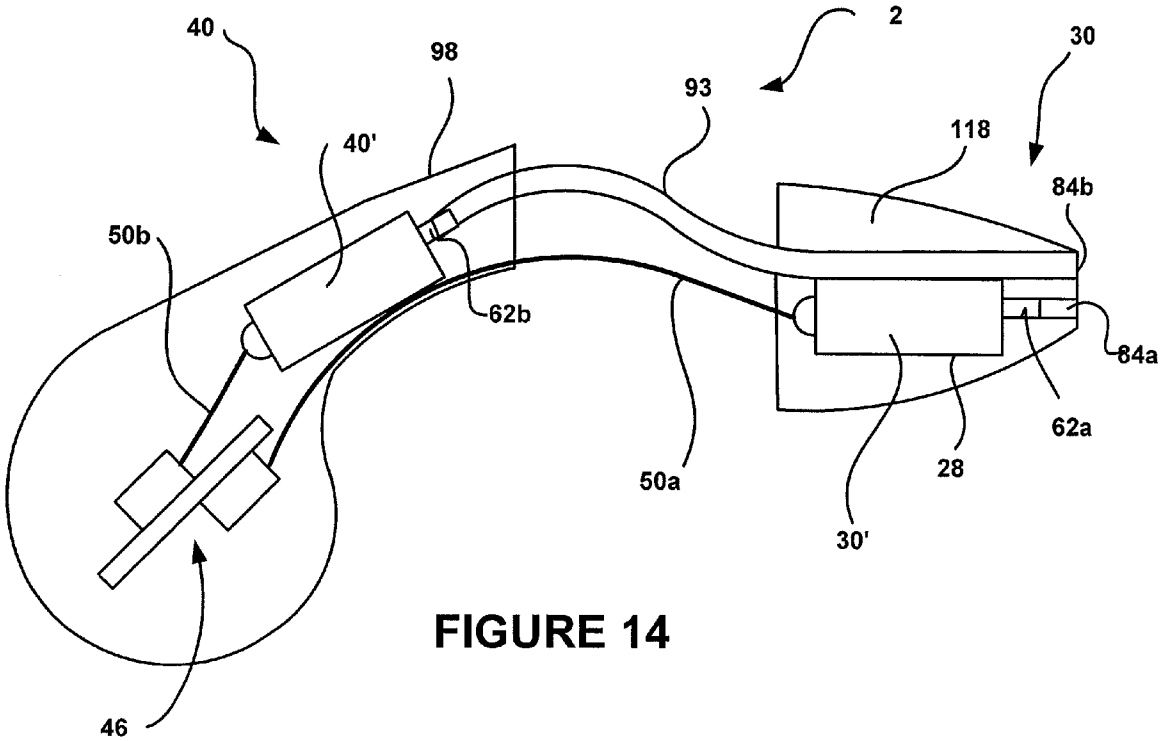

FIGURE 14

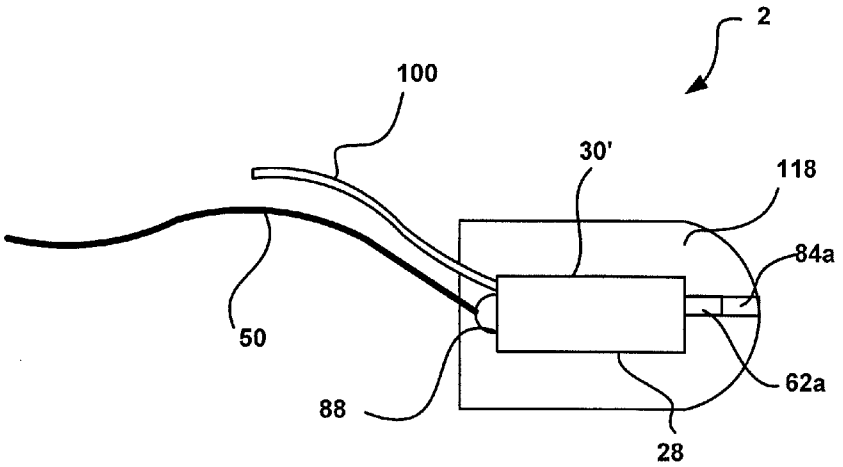

FIGURE 15

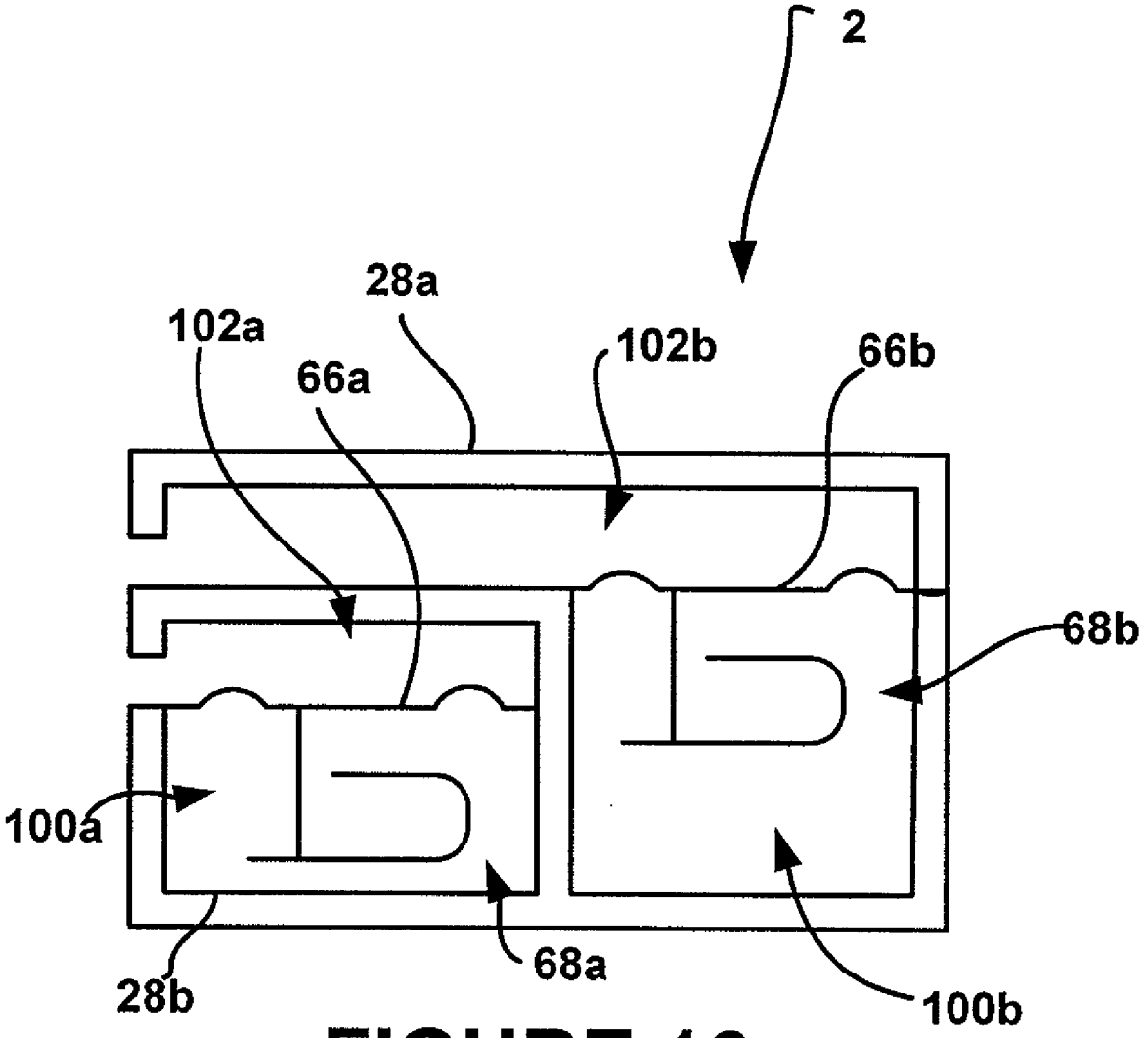

FIGURE 16

PERSONAL LISTENING DEVICE

CROSS-REFERENCE TO RELATED APPLICATION

[0001] This patent claims benefit under 35 U.S.C. § 119 (e) to U.S. Provisional Application No. 60/803,487, filed May 30, 2006 and entitled Assistive Listening System, the disclosure of which is hereby incorporated herein for all purposes.

BACKGROUND

[0002] Various hearing aids and earpiece devices are known in the art. Many take the form of a Behind-the-Ear (BTE), In-The-Ear (ITE), In-the-Canal (ITC), Completely-In-The Canal (CIC), or Receiver-in-the-Ear (RIE) component. In a typical hearing aid, the hearing aid is constructed with a four-piece structure, e.g. internal components for the receiver, receiver housing, surrounding structure, and an ear mold or compliant ear dome/tip. The receiver comprises a housing that is made of metal or a non-biocompatible material. Some wearers may be allergic to metal housing, and the wearer may experience discomfort when the receiver housing is directly in the ear canal.

[0003] The tissues covering the bony region of the ear are relatively thin and, therefore, little or no tolerance for expansion exists in this region as compared to the tissues covering the cartilaginous region. Inserting the metal receiver deeply into the ear canal so that it touches the bony region not only damages the tissues in the bony region, but the wearer will experience great pain.

[0004] The ear mold or compliant ear dome/tip is attached to the surrounding structure and then inserted into the ear canal for comfort wear. The ear mold and the surrounding structure must be carefully removed in order to reach the receiver, and once the receiver has been repaired or replaced, the receiver is inserted back into the ear mold and the surrounding structure.

[0005] The surrounding structure has been used to accomplish several tasks: protect the user from non-biocompatible receiver housing, provide ease of assembling the ear fit device, and protect the electrical and mechanical portions of the device from ear wax, perspiration, and various environmental contaminants.

[0006] A disadvantage in using the four-piece structure, e.g. internal components for the receiver, receiver housing, surrounding structure, and ear mold, for the earphone or the hearing aid is that it is very bulky by nature. Also, it is very difficult to design and control the design parameters of the surrounding structure to suit different receiver and hearing aid configurations. It is not suited for low cost mass production. In addition, in some cases, the structure needs to be taken apart in order to repair and or replace the receiver.

BRIEF DESCRIPTION OF THE DRAWINGS

[0007] For a more complete understanding of the disclosure, reference should be made to the following detailed description and accompanying drawings wherein:

[0008] FIG. **1** is a block diagram showing the communication link between a personal listening device and an external device according to various embodiments of the present invention;

[0009] FIG. **2** is a perspective view of a personal listening device that may be utilized in various types of devices according to various embodiments of the present invention;

[0010] FIG. **3** is a detailed block diagram showing an interface between a personal listening device and an external device in accordance with various embodiments of the present invention;

[0011] FIG. **4** is a simplified block diagram of another exemplary personal listening device in accordance with various embodiments of the present invention;

[0012] FIG. **5** is a simplified block diagram of another exemplary personal listening device in accordance with various embodiments of the present invention;

[0013] FIG. **6** is a simplified block diagram of another exemplary personal listening device in accordance with various embodiments of the present invention;

[0014] FIGS. **7**A-**7**C are different views of another exemplary personal listening device in accordance with various embodiments of the present invention;

[0015] FIG. **8** is a cross-sectional view of another exemplary personal listening device in accordance with various embodiments of the present invention;

[0016] FIGS. **9**A-**9**C are different views of another exemplary personal listening device in accordance with various embodiments of the present invention;

[0017] FIGS. **10**A-**10**C are different views of another exemplary personal listening device in accordance with various embodiments of the present invention;

[0018] FIGS. **11**A-**11**C are different views of another exemplary personal listening device in accordance with various embodiments of the present invention;

[0019] FIG. **12** is a cross-sectional view of another exemplary personal listening device in accordance with various embodiments of the present invention;

[0020] FIGS. **13**A-**13**B is a cross-sectional view of another exemplary personal listening device in accordance with various embodiments of the present invention;

[0021] FIG. **14** is a sectional view of another exemplary personal listening device in accordance with various embodiments of the present invention;

[0022] FIG. **15** is a sectional view of another exemplary personal listening device in accordance with various embodiments of the present invention; and

[0023] FIG. **16** is a cross-sectional view of another exemplary personal listening device in accordance with various embodiments of the present invention.

[0024] Skilled artisans will appreciate that all elements in the figures are illustrated for simplicity and clarity. It will further be appreciated that certain actions and/or steps may be described or depicted in a particular order of occurrence which those skilled in the art will understand that such specificity with respect to sequence is not actually required. It will also be understood that the terms and expressions used herein have the ordinary meaning as is accorded to such terms and expressions with respect to their corresponding respective areas of inquiry and study except where specific meanings have otherwise been set forth herein.

DETAILED DESCRIPTION

[0025] While the present disclosure is susceptible to various modifications and alternative forms, certain embodiments are shown by way of example in the drawings and, these embodiments will be described in detail herein. It will be understood, however, that this disclosure is not intended to limit the invention to the particular forms described, but to the contrary, the invention is intended to cover all modifications, alternatives, and equivalents falling within the spirit and scope of the invention defined by the appended claims.

[0026] FIGS. **1-2** illustrate the flexibility and usefulness of a personal listening device **2** to be fitted in the ear, on the ear, near the ear, or behind the ear, in accordance with one or more of the herein described embodiments. The personal listening device **2**, which may be virtually any personal listening device or system such as a hearing aid **8**, an earphone **10**, a headphone (not shown), a wireless headset **12**, an insert earphone (not shown), and the like. Other examples of devices are possible. An optional communication link **4**, which can be a direct wired link or a wireless link, couples the personal listening device **2** to an external device **6**. The external device **6** may be virtually any electronic device, a gaming device and the like such as a computer (e.g. a desktop, a laptop **14**, a notebook, a tablet **22**, a hand-held computer, a Personal Digital Assistant (PDA) **16**, etc), a communication device (e.g. cellular telephone **20**, a web-enabled cellular telephone, a cordless telephone, a pager, etc), a computer-related peripheral (e.g. a printer, a scanner, a monitor, etc), an entertainment device (e.g. a television, a radio, a stereo, a tape and/or compact disc player, a digital layer **3** (MP3) player, etc), a digital camera **18** and the like. Other examples of devices are possible. The external device **6** needs only to be capable of or configured to be capable of communication over one or more public or private communication networks.

[0027] The communication link **4** transmits and receives data or signals over the air (in a wireless mode) or over the wire (in a wired mode).

[0028] FIG. **3** illustrates a detailed block diagram of a personal listening device **2**. The personal listening device **2** comprises a first module **30**, a second module **40**, and a communication link **50** adapted to couple or decouple the first and second modules **30**, **40**. In this example, the first and second modules **30**, **40** may be a Receiver-in-the-Ear (RIE), a Behind-the-Ear (BTE), In-the-Ear (ITE), In-the-Canal (ITC), Completely-in-the-Canal (CIC) component or combination thereof. Other examples of devices are possible. Alternatively the modules **30**, **40** may be integrated to form a single device. More aspects about the formation of the system **2** are described elsewhere in this specification. At least a portion of the personal listening device **2** may be optionally coupled to an external device **6** via a second communication link **4** adapted to couple or decouple the personal listening device **2** and the external device **6**. The first and second communication links **50**, **4** may be virtually any communication link, and for example, the communication links **50**, **4** may be constructed and defined or configured to operate in a wired mode, a wireless mode, or both wired and wireless modes to transmit and receive data or signals over the air or over the cable. If the system **2** and the external device **6** are constructed in a wireless mode to radiate signals in the radio frequency (RF) range for instance, the system **2** may be at a remote location with respect to the external device **6**. Alternatively, the system **2** and the external device **6** may be converted to a wired mode by means of plugging the wired link **50** and/or **4**.

[0029] The module **30** may include one or more devices, e.g. **32** or **34**, to deliver an acoustic energy directly to the ear canal. The devices **32**, **34** may be a receiver, a dual receiver, a microphone/receiver, or a microphone with a dual receiver, depending on the desired applications. Other types of electroacoustic transducers are possible. In this example, the receiver may be a silicon (micro-electromechanical machined, MEMS) receiver, a balanced armature receiver, a bone-conduction receiver, or combinations thereof for the conversion of an electrical audio frequency signal to an acoustic or vibratory signal, depending on the desired applications. Alternatively, the devices **32**, **34** may be selected to have virtually any frequency response. For example, the devices **32**, **34** may be low-range frequency (LF) receivers, mid-range frequency (MF) receivers, high-range frequency (HF) receivers, or a combination thereof. The microphone may be a silicon (MEMS) condenser microphone, an electret microphone, an omni-directional microphone, a directional microphone, a dynamic microphone, or a monitor microphone such as the monitor microphone disclosed in U.S. patent Ser. No. 11/382,318, filed on May 9, 2006, the disclosure of which is herein incorporated by reference in its entirely for all purpose, depending on the desired applications. Other types of microphones are possible. The module **30** may further include other electronic components such as a power source **36**, a transceiver **38** with an antenna **39**, and a processor (not shown). The transceiver **38** is configured to send and receive signals between the modules **30**, **40** via the wireless communication link **50**. The power source **36** is coupled to the rest of the electronic components to provide power. The processor (not shown) may be a signal processing unit, a speech processing unit, a multi-function processing unit or the like, and it is coupled between the transducers **32**, **34** and the transceiver **38**. Other types of processor are possible. The antenna **39** is used to transmit and receive signals from the transceiver **38**. The antenna **39** may be external or internal to the module **30**. The antenna **39** may serve as part of the communication link. Alternatively, the antenna **39** may serve as part of the retrieval member to remove the module **30** from the ear.

[0030] The module **40** includes at least one device **42**. The device **42** may be a microphone to receive sound from the outside environment. Alternatively, the device **42** may be multiple devices such as a microphone/receiver, a dual microphone, or a plurality of microphones. The module **40** may further include other electronic components such as a power source **44**, a signal processing unit **46**, and a transceiver **48** with an antenna **49**. The microphone **42** converts acoustic signals into electrical signals and transfers such electrical signals to the signal processing unit **46** for processing before such signals are transmitted to the module **30** via the optional transceiver **48**. Like the transceiver **38** of module **30**, the transceiver **48** is in operative communication with the transducer **42** and/or the external device **6** and is configured to transmit and receive wireless communication in accordance with any suitable protocol such as Bluetooth, Ultra-Wideband (UWB), Home Radio Frequency (HomeRF), Digital Enhanced Cordless Telephone (DECT), Personal Handy System (PHS), wireless LAN (WLAN), or

other open or proprietary protocols now known or later developed that are capable to couple between the modules **30**, **40** and/or the external device **6**. The antenna **49** is used to transmit and receive signals from the transceiver **48**. The antenna **49** may be external or internal to the module **40**. The power source **44** is coupled to the rest of the components of the module **40** to provide power. Other circuitry such as a speech processing unit, switching means, digital audio compression and depression, oscillator-FM modulator, multipliers, expender, FM detector, down-converter and intermediate frequency (IF), or the like now known or later developed may be provided in the modules **30**, **40** to perform certain operations.

[**0031**] The external device **6**, such as a mobile phone, has the capability to send and receive a wide variety of audio signals between the system **2** either by the wired link or a wireless link **4**, **24** and a wireless network **26**. In turn, it is connected to the public switched telephone network (PSTN). The wireless network **26** may be a cellular network, a paging network, or the like. Other types of network are possible. The cellular network **26** includes common data service network protocols for sending and receiving information to and from the mobile phone such as AMPS (analog signal), Time Division Multiple Access (TDMA), Code Division Multiple Access (CDMA), Global System for Mobile Communications (GSM), Personal Handy System (PHS), Digital Enhanced Cordless Telephony (DECT), General Packet Radio Service (GPRS), or other open or proprietary wireless data service protocols now known or later developed. Alternatively, the external device **6** may be other types of electronic devices (See FIG. **2**) that do not require communication with a wireless network.

[**0032**] FIG. **4** illustrates a simplified block diagram of a personal listening device **2**. In this example, module **30** is electrically coupled to a second module **40** via a wired communication link **50**. The module **30**, which is capable of converting amplified signals to acoustic signals before transmitting to the ear canal of a user, comprises an acoustic assembly and a motor assembly that is attached to the acoustic assembly via a coupling assembly. The assemblies are disposed within a housing **28**. The housing **28** may be made of any biocompatible material and has no adverse effect on the surrounding tissue. More aspects about the formation of the module **30** will be discussed in greater detail herein. In this example, the module **30** may be a RIE, CIC, ITC, ITE, or any body-worn device. Other types of listening devices are possible. The module **40** comprises a microphone **42** and a signal processing unit **46** disposed in a housing **54**. Alternatively, the microphone **42** may be separated from the signal processing unit **46** and is located outside the housing **54**. A second communication link (not shown) couples the microphone **42** to the module **40** and/or the module **30**. A microphone **42** comprises a housing (not shown) made of any bio-compatible material that is used to encapsulate the internal components and is then inserted into the auditory canal. The module **40** may be a BTE, ITE, or ITC. Other types of listening devices are possible. More than one microphone may be provided. The microphone **42** receives acoustic signals from the external environment and converts such signals into electrical signals before the signals are transmitted to the signal processor unit **46**. The signal processor unit **46** then amplifies the signal received from the microphone **42** and delivers the processed signal to the module **30** via the communication link **50**. More aspects about the formation of the communication link **50** are described elsewhere in this specification.

[**0033**] FIG. **5** illustrates a simplified block diagram of a personal listening device **2**. In this example, the first and second modules **30**, **40** are integrated into a single unit. The module **30** capable of converting amplified signals to acoustic signals before transmitting to the ear canal of a user comprises an acoustic assembly and a motor assembly that is attached to the acoustic assembly via a coupling assembly. The assemblies are disposed within a housing **28**. The housing **28** may be made of any biocompatible and has no adverse effects on the surrounding tissue in the ear canal. The module **40** comprises a microphone **42** and a signal processing unit **46**. More than one microphone may be included. The microphone **42** and the signal processing unit **46** are disposed in a housing **54**. The housing **28** comprises a connecting member **52** configured to attach the plastic body **28** to the housing **54**. Alternatively, the housing **28** of the module **30** has a first end adapted to couple and decouple with the housing **54** of the module **40** by mechanical fastening, crimping, welding, adhesive bonding, or any other suitable attachment arrangement now known or later developed. The module **30** or **40** is easily removed and replaced if the module **30** or **40** fails for any reason. In this example, the system **2** may be a CIC, ITC, ITE, BTE, or RIE component.

[**0034**] FIG. **6** illustrates a simplified block diagram of a personal listening device **2**. In this example, a module **30** is a listening device. The listening device **30** may be an earphone, an earplug, a headphone, a wireless earphone, a wireless headset, a wireless headphone, an insert earphone and the like. Other types of devices are possible. The listening device **30** comprises at least one earphone to be positioned in an ear canal. The earphone **30** may be electrically coupled to an electronic device **6** via a suitable communication link **50** that provides audio signals to the earphone **30**. Alternatively, a user input device (not shown) may be coupled to the earphone **30** to perform different functions. The earphone **30** comprises a plastic body **28** to be worn by a user. An acoustic assembly and a motor assembly coupled to the acoustic assembly via the coupling assembly are collectively disposed within the housing **28**. An outer surface of the body **28** can take various forms or shapes adapted for fitting to the user's ear. Alternatively, an ear impression, a sealed mold, an ear tip, an ear mold, an ear dome, an ear tube, an ear mold, an ear bud, an ear cone, or an ear plug of varying sizes and shapes, or the like may be used to cover at least a portion of the body **28**. This allows the user to wear the listening device **30** comfortably for an extended period of time. The body **28** with or without the ear tip provides a good seal in the ear. Alternatively, the body **28** may be smaller in size than the interior of the auditory canal whereby the body **28**, with or without the ear tip, does not occlude the ear canal.

[**0035**] In this example, the external device **6** may be a communication device, an audio device, a gaming device, an entertainment device, or combination thereof. Other types of devices are possible.

[**0036**] FIGS. **7A-7C** illustrate different views of a personal listening device **2**. In this example, the system **2** is configured to generate acoustic energy in the ear canal of the wearer. The system **2** can function on either ear. In this

example, the system **2** is a receiver to drive an acoustic signal directly to the ear canal. The system **2** comprises a housing **28**, a connector assembly **52**, and a tube assembly **62**. The housing **28** comprises a top housing **28***a* and a bottom housing **28***b*. Although the top housing **28***a* and the bottom housing **28***b* are depicted, it is possible to add additional structures. For example, a spacer may be added between the top housing **28***a* and the bottom housing **28***b* to increase the overall height and volume of the housing **28** or the bottom housing **28***b* and the top housing **28***a* may be molded as a single structure. A chamber **64** is formed within the housing **28** to receive a motor assembly **68**. The chamber **64** may generally be shaped to correspond to the shape and configuration of the assemblies **66**, **68** but may be formed to compliment the various shape of the different examples, including a roughly square shape, a cylindrical shape or other desired geometry. As shown, the chamber **64** has a rectangular in cross-sectional shape. In addition, the scale and size of the chamber **64** may vary based on the intended applications, operating conditions, required components, etc. The outer surface of the housing **28** can take various forms or configurations adapted for fitting to the user's ear. The housing **28** may be shaped to fit into the external auditory canal without blocking the canal. Alternatively, the housing **28** may be designed to comfortably fit in the user's ear and yet provides a good seal. The housing **28** may be manufactured from any type of moldable or formable material that is corrosion resistant and bio-compatible for skin contact, including plastic, polycarbonate, nylon, liquid crystal polymer (LCP), PEEK, or any other similar materials. Alternatively, part of the housing **28** may be made of magnetically soft steel, such as metal injection molded material, that is capable of providing electromagnetic shielding or to function as part of the magnetic return path for the motor assembly **68**. Such material may be provided to the inner wall of the housing **28**, between layers of the biocompatible, corrosion-resistant material, or outer wall of the housing **28**. Yet in another example, the housing **28** may be made of any material, including, but is not limited to Acetal Copolymer or Homopolymer (POM) (Delrin), Acrylic (PMMA), Acrylonitrile Butadiene Styrene (ABS), Cellulose Acetate (CA, CB, CP), Polyamide (Nylons), Polyimide (Kapton), Polycarbonate (PC) (Lexan), Polyethylene Terephthalate (PET), Polyetherimide (PEI) (Ultem), Polyetheretherketone (PEEK), Polyethylene, Polyphenylene Oxide (PPO) (Noryl), Polyphenylene Sulphide (PPS), Polypropylene (PP), Polystyrene, Polyvinyl Chloride (PVC), Styrene Acrylonitrile (SAN/ASA), Polyphtalamide (PPA), Polysulphone, polyphenylsulfone (Radel), polybutylene terephthalate (PBT) (Pocan), Polyphthalamide (PPA), Fluoropolymers, Polyarylate, Silicone, or the like. Material may be a blend or alloy of these materials. The material may or may not include additives for providing strength and expansion control such as glass content, carbon fiber, or the like. Other materials for providing one or more features, including electrical conductivity, magnetic conductivity, UV stabilization, moisture absorption, moldability, chemical resistance, temperature resistance, flexibility, durability, and hardness, may or may not be added to the base material as disclosed above. Other types of materials are possible. An optional non-biocompatible thin film or layer (not shown) may be provided to the housing **28** such that at least a surface of the housing is covered by the film or layer. Alternatively, the housing **28** comprises alternating layers of material, at least one layer of biocompatible material and at least one layer of non-biocompatible material. In another example, the housing **28** comprises an innermost layer that is made of biocompatible material, and at least a portion of the inner surface is provided with a non-biocompatible thin film or layer. The thin film may be made of any material that enhances electromagnetic performance, adhesive characteristics, corrosion characteristics, and environmental protection such as copper, gold, epoxy, primers, or sealant. Alternatively, other types of thin film used for surface treatments in order to enhance adhesion of parts, sealants to encapsulated and protect parts, paints, treatments, thin films for decorative or other reasons may be used. Unlike previous listening devices, the overall size of the module **2** is reduced and a second housing, also known as a surrounding structure is no longer required.

[**0037**] The motor assembly **68** comprises a drive magnet (not shown), a magnetic yoke **70**, a coil **72** with or without a bobbin, an armature **74**, and a coupling assembly **76**. The device **2** further comprises an acoustic assembly **66**. The acoustic assembly **66** may be a single layer diaphragm assembly, a multiple layer diaphragm assembly, or the like. The acoustic assembly **66** may be manufactured in a variety of shapes and sizes that may or may not correspond to the chamber **64** and/or the motor assembly **68**. For example, the acoustic assembly **66** may be wider and longer or may be narrower and shorter than the motor assembly **68**. More aspects about the configuration of the acoustic assembly **66** are described elsewhere in this specification. The acoustic assembly **66** divides the chamber **64** into a back volume **100** and a front volume **102**.

[**0038**] The coupling assembly **76** may be a drive rod, a linkage assembly, a plurality of linkage assemblies, or the like. The drive magnet (not shown) may be made of a hard magnetic material such as Ferrite, AlNiCo, Samarium-Cobalt, Neodymium-Iron-Boron, or of any other similar materials. Other types of materials are possible. It will be understood that virtually any magnet shape or configuration suitable for the desired application may suffice. The magnetic yoke **70** may be made of a permeable, soft magnetic material, including Nickel-Iron, Nickel-Iron-Molybdenum, steels, cobalt-iron-vanadium, or any similar alloys and materials. Other types of materials are possible. The magnetic yoke **70** may be formed to compliment the various shape and size of the different examples. As shown, the magnet is fixedly attached to the inner wall of the magnetic yoke **70**. Although the magnet and the magnetic yoke are a two-piece structure, it is possible to construct the magnet and the yoke **70** as a single unit. The armature **74** is generally U-shaped. One of ordinary skill in the art will appreciate that the armature **74** may be E-shaped, Y-shaped, or of a different configuration and size suitable for the desired application. The coil **72** is made of electrically conductive materials having thickness and a plurality of turns. In alternate examples, the coil may be made of alternating layers of insulating and conducting materials. Other types of materials are possible. As shown in FIG. **7**B, the coil **72** is sized to conform to the shape of the chamber **64**, but may be produced in a variety of shapes and sizes that may or may not correspond to the chamber **64**. For example, the coil **72** may be an oval shape having a dimension smaller than the chamber **64** while the chamber **64** may be manufactured having a rectangular shape. An optional acoustic structure and/or an electrical structure are disposed in the housing **28**.

The structures may be acoustic compliances, acoustic resistances, acoustic inertances, damping, acoustical filters, chambers, tubes, ports, vents, electrical filters, or combinations thereof.

[0039] In this example, the armature **74** comprises a movable leg extending through the coil **72** and the magnetic yoke **70** and a fixed leg secured outside the magnetic yoke **70** by any known technique. One end of the coupling assembly **76** is attached to a free end of the movable armature **74** by any known technique and the opposite end of the coupling assembly **76** is attached to the acoustic assembly **66** by any known technique. Alternatively, the diaphragm **66** may be coupled directly to the movable leg of the armature **74**. Two wires **76** extend from the coil **72** and are electrically coupled to pins **78** which protrude through a rear wall **80** of the chamber **64**. Alternatively, the wires **76** are electrically coupled to a communication link (not shown). Locking members **104** formed on the bottom housing **28***b* secure the pins **78** in proper position and a strain relief **52** for protecting the wires **76** and the pins **78** secures and retains the communication link. The wires **76** receive an electrical input signal that is converted by the acoustic assembly **66** and the motor assembly **68** to an acoustic signal which is broadcast through an outlet **84**. As shown in FIGS. **7**B-**7**C, the outlet **84** is provided on the top housing **28***a* by any known technique and is directly connected to the back volume **100** to allow acoustic energy to be transmitted to the user. Although one outlet **84** is depicted, it is possible to provide an additional outlet or acoustic path. The communication link **50** may be made of similar material to the housing **28**. Use of other types of materials that posses sufficient structural properties and rigidity is possible. The housing **28** has a first end **82** adapted for mechanical connection with a first end **106** of the connector assembly **52**. If the connector assembly fails for any reason, the connector assembly is easily removed and replaced with a functional connector assembly **52**. The strain relief **52** may be posed of sufficient structural properties and yet rigidity for insertion and removal of the system **2** from the auditory canal without separating the strain relief **52** from the housing **28**. Once the acoustic assembly **66** and the motor assembly **68** are held in place in the chamber **64**, the top and bottom housing **33***a*, **33***b* are then fixedly attached together by any known technique.

[0040] As shown, the tube assembly or the channel **62** has an opening **98** adapted for accommodation of the wax screen **96** that is positioned in the transmission path of sound that is emitted from the outlet **84** by the assemblies **66**, **68**. The wax screen **96** is used to protect the internal components from damage. Like the connector assembly **52**, the tube portion **62** may be made of similar material as the housing **28**. Use of other types of material is possible. The tube portion **62** is coupled to a second end **108** of the housing **28** by any known technique. The tube assembly **62** may be manufactured in a variety of lengths and dimensions to modify the frequency response of the module **30**. In certain applications, the tube assembly **62** is not required and the acoustic assembly **66** via the outlet **84** is exposed to the ear canal for direct transmission of sound into the user's ear. An optional wax screen may be provided to cover the outlet **84** against cerumen or ear wax. Alternatively, at least one aperture may be formed on the housing **28** to provide a flow path for cleaning liquids that are used when flushing out the front volume **102** and cleaning the acoustic assembly **66**. Wax protection measures such as removable or cleanable wax grids, wax plungers, or the like may be inserted in the acoustic path between the acoustic assembly **66** and the ear canal. Alternatively, a portion of the housing **28** may be removed to clean, service, or rework the internal components.

[0041] FIG. **8** illustrates a cross-sectional view of a personal listening device **2**. FIG. **8** is similar in construction to the system **2** in FIG. **7**C. As mentioned earlier, a strain relief member **79** may be formed as part of a communication link **50** is provided at the rear wall **80** of the housing **28**. The strain relief member **79** is provided for retaining the wire **76** and to prevent accidental removal of the communication link **50** from the motor assembly **68**. The communication link **50** preferably is stretchable, bendable and preferably retains the conductor **86** in position. As shown, the conductor **86** may be wound as a helix to prevent breaking when the cable is stretched. An optional retrieval member may be provided to the system **2** for removal of the system **2** from the ear canal. The retrieval member may be formed as part of the communication link **50**. A portion of the communication link **50** extending from the housing **28** may be hollow, providing acoustical measures to modify the frequency response of the system **2**.

[0042] FIGS. **9**A-**9**C illustrate different views of a personal listening device **2**. FIGS. **9**A-**9**C are similar in construction to the system **2** of FIGS. **7**A-**7**C except that a short tube **84** serving as an acoustic outlet protrudes from a second end **108** of the housing **28**. The short tube **84** is coupled to the inner wall of a tube assembly **62**, and a wax screen **96** is attached in the tube assembly **62** opposed to the outlet **84** by any suitable method of attachment. An optional dampening or an acoustic labyrinth may be provided within the tube assembly for tuning an acoustic response. Alternatively, the wax screen **96** may be coupled directly to the outlet **84** if the tube assembly **62** is not provided. A connector assembly **52** comprises a plurality of flange **94** adapted for coupling or decoupling the housing **28**, is mounted to the outer wall of the housing **28** such that a portion of the housing **28** is covered by the connector assembly **52**.

[0043] FIGS. **10**A-**10**C illustrate different views of a personal listening device **2**. FIGS. **10**A-**10**C are similar in construction to the system **2** of FIGS. **9**A-**9**C. In contrast to the system **2** in the foregoing figures, a tube assembly **62** adapted to couple or decouple is provided to the front wall of a housing **28**. A second chamber **60** is provided to fixedly attach the wire **88** to the second chamber **60** by any known technique. A first end of a communication link **50** is electrically coupled to the wire **88** and a second end (not shown) of the communication link **50** is connected to the external device (not shown).

[0044] FIGS. **11**A-**11**C illustrate different views of a personal listening device **2**. In contrast to the system **2** in the foregoing figures, the system **2** comprises two acoustic assemblies **66***a*, **66***b* and two motor assemblies **68***a*, **68***b*, collectively disposed in a housing **28**. As shown, the acoustic assemblies **66***a*, **66***b* are arranged such that the assemblies **66***a*, **66***b* face each other and share a common front volume **102**. A first back volume **100***a* and a second back volume **100***b* are formed in the chamber **64**, wherein the first motor assembly **68***a* is disposed in the first back volume **100***a* and the second motor assembly **68***b* is disposed in the second

back volume **100***b*. Alternatively, the motor assemblies **68***a*, **68***b* may share a common back volume **100** and the acoustic assemblies **66***a*, **66***b* separate the chamber **64** to form first and second back volumes **102***a*, **102***b*. An optional structure (not shown) may be provided to separate the assemblies **66***a*, **66***b*, **68***a*, **68***b* such that two chambers **64***a*, **64***b* are formed. The assemblies **66***a*, **66***b*, **68***a*, **88***b* no longer share a common volume. The assemblies **66***a*, **68***a* are disposed in the first chamber **64***a* and the assemblies **66***b*, **68***b* are disposed in the second chamber **64***b*.

[**0045**] FIG. **12** illustrates a cross-sectional view of an assistive system **2**. In contrast to the system **2** in FIG. **11**, the system **2** comprises two motor assemblies **68***a*, **68***b* and an acoustic assembly **66**. The ends of the acoustic assembly **66** may be hinged to the side walls of the housing **28**, the inner walls of the housing **28**, or other support members provided within the housing **28**. The motor assemblies **68***a*, **68***b* are coupled to the acoustic assembly **66** by any known technique. In this example, the coupling assembly **76***a* is positioned at one end of the acoustic assembly **66** (close to the front wall of the housing **28**), and the coupling assembly **76***b* is positioned at the opposite end of the acoustic assembly **66** (close to the rear wall of the housing **28**). The motor assemblies **68***a*, **68***b* share a common back volume **100**, and the diaphragm assembly **66** vibrates in response to the assemblies **68***a*, **68***b*. At least one sound port may be provided to directly connect the front volume **102** to allow acoustic energy to be transmitted to the user. In this example shown, two ports **84***a*, **84***b* are provided to roll off occlusion effect and low frequency. Alternatively, a second sound port may be provided in communication with the back volume **100** for pressure equalization between the back volume **100** and the surrounding.

[**0046**] FIGS. **13**A-**13**B illustrate cross-sectional views of an assistive system **2**. Unlike from FIG. **12**, the coupling assembly **76***b* is positioned in the mid portion of the acoustic assembly **66** within the chamber **64**. In this configuration, the coupling assemblies **76***a*, **76***b* provide further support to the acoustic assembly **66** when the acoustic assembly **66** is excited by the motor assemblies **68***a*, **68***b*. Alternatively, an optional structure is provided to separate the motor assemblies **68***a*, **68***b* so that the assemblies **68***a*, **68***b* no longer share a common back volume **100**. Two front volumes **100***a*, **100***b* are illustrated in FIG. **13**B, wherein the motor assembly **68***a* corresponds to the first back volume **100***a* and the motor assembly **68***b* corresponds to the second back volume **100***b*. A common front volume **102** is formed and shared by the first and second acoustic assemblies **66***a*, **66***b*.

[**0047**] FIG. **14** illustrates a sectional view of an assistive system **2**. The system **2** comprises a first module **30**, a second module **40**, and communication links **50***a*, **50***b* between the modules **30**, **40**. The first module **30** includes a high frequency (HF) transducer. Also, an optional ear mold **118** may be provided such that a portion of the module **30** is disposed in the ear mold **118**. A sound outlet tube **62***a* coupled to the HF transducer **30** is mated with a first sound port **84***a* formed within the ear mold **118**. The second module **40** includes a low frequency (LF) transducer and a driving circuit assembly **46**, disposed within a housing **54** of the second module **40**. The driving circuit assembly **46** electrically couples the LF transducer **40** to the HF transducer **30**. The LF transducer **40** includes a sound outlet tube **62***b* that is coupled to a LF acoustic transmission tube **93**. The LF tube **93** may function to filter LF signals emitted from the LF transducer **40**. The HF transducer **30** is not driven by a substantially LF input signal. As shown, the LF tube **93** extends from the second module **40** to the first module **30** such that a portion of the LF tube **93** is retained in a hollow section that is formed within the ear mold **96**. The end portion of the LF tube **93** is mated with a second sound port **84***b* of the ear mold **118**. The communication link **50***a* electrically couples the first module **30** to the circuit **46**, and the communication link **50***b* electrically couples the second module **30** to the circuit **46**.

[**0048**] FIG. **15** illustrates yet another example of a personal listening device **2**. A first module **30** of the system **2** includes a transducer and a sound tube **62***a* attached to the transducer **30**, disposed within an ear mold **118**. An acoustic tube **93** coupled to the housing **28** may function as a hollow tube to provide LF response modification. Also, the acoustic tube **93** may act as a retrieval member for removal of the module **30** from the ear canal. A communication link **50** parallel to the acoustic tube **93** is coupled to an electrical terminal **88** formed on the rear portion of the transducer **30**. Alternatively, the acoustic tube **93** and the communication link **50** may be integrated as a single unit. As shown in FIGS. **14**-**15**, the first module **30** may be an RIE, CIC, or ITC component and the second module may be a BTE, ITE, or a similar device. Other types of devices are possible.

[**0049**] FIG. **16** illustrates another example of a module **30**. The module **30** includes dual transducers **32**, **34**. Electrical terminals **88***a*, **88***b* are formed at the rear portion of the transducers **32**, **34**. Optional wires (not shown) that extend from the terminals **88***a*, **88***b* are coupled to a driving circuit (not shown). As shown, the transducers **32**, **34** are mounted either side-by side or end-to-end in order to fit into the ear canal. Each transducer **32**, **34** comprise an acoustic assembly and a motor assembly mounted in a housing **28**. The housing **28** may be manufactured from any type of moldable or formable material that is corrosion resistant and is biocompatible for skin contact, including plastic, polycarbonate nylon, liquid crystal polymer (LCP), PEEK, or any other similar materials. Alternatively, part of the housing **28** may be made of magnetically soft metal injection molded material that is capable to function as part of the magnetic return path or electromagnetic shielding for the motor assembly. Such material may be provided to the inner wall of the housing **28**, between layers of the bio-compatible, corrosion resistant material, or outer wall of the housing **28**. Yet in another example, the housing **28** may be made of any material, including but is not limited to Acetal Copolymer or Homopolymer (POM) (Delrin), Acrylic (PMMA), Acrylonitrile Butadiene Styrene (ABS), Cellulose Acetate (CA, CB, CP), Polyamide (Nylons), Polyimide (Kapton), Polycarbonate (PC) (lexan), Polyethylene Terephthalate (PET), Polyetherimide (PEI) (Ultem), Polyetheretherketone (PEEK), Polyethylene, Polyphenylene Oxide (PPO) (Noryl), Polyphenylene Sulphide (PPS), Polypropylene (PP), Polystyrene, Polyvinyl Chloride (PVC), Styrene Acrylonitrile (SAN/ASA), Polyphtalamide (PPA), Polysulphone, polyphenylsulfone (Radel), polybutylene terephthalate (PBT) (Pocan), Polyphthalamide (PPA), Fluoropolymers, Polyarylate, Silicone, or of any similar like. Material may be a blend of these materials or an alloy of these materials. The material may or may not include additives for providing strength and expansion control such as glass content, carbon fiber, or the like. Other materials for providing one or more

features, including electrical conductivity, magnetic conductivity, UV stabilization, moisture absorption, moldability, chemical resistance, temperature resistance, flexibility, durability, or hardness, may or may not added to the base material as disclosed above. Other types of materials are possible. An optional non-biocompatible thin film or layer (not shown) may be provided to the housing **28** such that at least a surface of the housing is covered by the film or layer. Alternatively, the housing **28** comprises layers of material, at least one layer of biocompatible material and at least one layer of non-biocompatible material. In another example, the housing **28** comprises an innermost layer that is made of biocompatible material and at least a portion of the layer is provided with a non-biocompatible thin film or layer. The thin film may be made of any material that enhances electromagnetic performance, adhesive, or corrosion characteristics and environmental protection, such as copper, gold, epoxy, primers, or sealant. Alternatively, other types of thin film for surface treatments to enhance adhesion of parts, sealants to encapsulated and protect parts, paints, treatments, thin films for decorative or other reasons may be used. A second sound outlet port **84***b* of the transducer **34** is provided to direct the acoustic energy to the ear canal through a separate tube **62***b* apart from a first sound outlet port **84***a* formed at the transducer **32**. The second tube assembly **62***b* couples to the outlet **84***b* of the transducer **34**. It is mounted in an internal cavity **64** of the housing **28** and then extended through a first end **82** of the housing **28**. An optional electrical filter such as a crossover network may be provided to one or more of the transducers **32**, **34**. An optional acoustic modification may be provided to the receiver for alternating the frequency response.

[0050] It will be appreciated that numerous variations to the above mentioned approaches are possible. Variations to the above approaches may, for example, include performing the above steps in a different order. Further, one or more structures may be coupled to the system or module. For example, an electrical cross-over network may be coupled to the connector assembly and adapted for modifying the electrical signal to drive the system or module. In another example, the communication link, the connector assembly, or combination thereof containing acoustical pathways such as tubes, channels, horns, cavities, screens, grids, diaphragms, or the like may be provided and attached to the outlet of the system or module adapted for modification the acoustic response. In yet another example, the top housing of the module may be constructed to be readily removed for cleaning or removing the ear wax. Alternatively, an optional door attached to the top housing in connection with the front volume may be opened for cleaning or removing the ear wax. In another example, the outer surface of the housing may have features for snapping an ear tip, or ear dome, an ear retention clip, or other external accessories. In yet another example, the communication link is reversible wherein the personal listening device and the signal source may connect to any two common ends.

[0051] All references, including publications, patent applications, and patents, cited herein are hereby incorporated by reference to the same extend as if each reference were individually and specifically indicated to be incorporated by reference and were set forth in its entirety herein.

[0052] Preferred embodiments of this invention are described herein, including the best mode known to the inventors for carrying out the invention. It should be understood that the illustrated embodiments are exemplary only, and should not be taken as limiting the scope of the invention.

What is claimed is:

1. A receiver module for a personal listening device to be fitted in the ear, on the ear, near the ear, or behind the ear, the receiver module having a movable armature, the receiver module comprising:

a motor assembly; and

a housing defining a chamber, the housing being at least partially constructed of a biocompatible material, wherein the motor assembly is directly disposed in the chamber.

2. The receiver module of claim 1, wherein the housing is entirely constructed of biocompatible material.

3. The receiver module of claim 1, wherein the housing has an inner surface, at least a portion of the inner surface being provided with a non-biocompatible thin film.

4. The receiver module of claim 1, wherein the housing comprises a plurality of layers, at least one layer comprising a non-biocompatible material and wherein an inner layer of the housing in proximity to the motor assembly is a biocompatible material.

5. The receiver module of claim 3 or 4, wherein the thin film for enhancing electromagnetic, adhesive characteristics, corrosion characteristics, and environmental protection is selected from a group consisting of copper, gold, epoxy, primers, or sealant.

6. The receiver module of claim 1, wherein the biocompatible material is selected from the group consisting of plastic, liquid crystal polymer, Acetal Copolymer, Homopolymer, Acrylic, Acrylonitrile Butadiene Styrene, Cellulose Acetate, Polyamide, Polyimide, Polycarbonate, Polyethylene Terephthalate, Polyetherimide, Polyetheretherketone, Polyethylene, Polyphenylene Oxide, Polyphenylene Sulphide, Polypropylene, Polystyrene, Polyvinyl Chloride, Styrene Acrylonitrile, Polyphtalamide, Polysulphone, polyphenylsulfone, polybutylene terephthalate, Polyphthalamide, Fluoropolymers, Polyarylate, or Silicone.

7. The receiver module of claim 1, 2, **3**, or **4**, further comprising one or more motor assemblies being disposed in the housing.

8. The receiver module of claim 7, further comprising one or more structures selected from a group comprising an acoustic structure and an electrical structure for providing one or more of an acoustic compliance, an acoustic resistance, an acoustic inertance, a damping, an acoustical filter, a tube, a port, a vent, and an electrical filter being disposed in the housing.

9. The receiver module of claim 8, further comprising one or more diaphragms coupled to one or more of the motor assembly, the acoustic structure, and the electrical structure enclosed in the housing.

10. The receiver module of claim 1, 2, **3**, or **4**, wherein one or more module is being provided, capable of transducing signals is selected from the group consisting of a microelectromechanical machined system (MEMS) silicon-based receiver, a balanced armature receiver, a moving coil receiver, a bone-conduction receiver, a MEMS silicon-based condenser microphone, an electret microphone, an omni-

directional microphone, a directional microphone, a dynamic microphone, a monitor microphone, or combination thereof.

11. The receiver module of claim 1, 2, **3**, or **4**, further comprising a connector assembly that is adapted to couple and decouple to a signal source.

12. The receiver module of claim 1, 2, **3**, or **4**, wherein a communication link is coupled between a signal source and the receiver module, wherein the communication link is one of a wireless connection or a wired connection.

13. The receiver module of claim 11 or 12, wherein the signal source is one of a hearing aid, a communication device, a gaming device, an audio device, an electronic device, or combination thereof.

14. The receiver module of claim 1, 2, **3**, or **4**, wherein at least a portion of the module is coupled to one of an ear tip, an ear dome, an ear tube, an ear mold, an ear bud, an ear cone, an ear plug, or an open canal support of varying sizes and shapes.

15. The receiver module of claim 14, wherein one of the ear tip, the ear dome, the ear tube, the ear mold, the ear bud, the ear cone, or the ear plug is being detachably coupled from the module.

16. The receiver module of claim 1, 2, **3**, or **4**, wherein the motor assembly comprising a coil, a magnetic yoke, and a magnet.

17. A receiver module for a personal listening device comprising at least one motor assembly; and

a housing defining a chamber, the housing comprising an inner surface, wherein the inner surface in proximity to the motor assembly is constructed from a biocompatible material.

18. The receiver module of claim 17, wherein a connector assembly is adapted to couple and decouple the device from a signal source.

19. The receiver module of claim 17, wherein a communication link is coupled between a signal source and the receiver module, wherein the communication link is one of a wireless connection or a wired connection.

20. The receiver module of claim 17, wherein at least a portion of the module is coupled to one of an ear tip, an ear dome, an ear tube, an ear mold, an ear bud, an ear cone, an ear plug, or an open canal support of varying sizes and shapes.

21. A receiver module for a personal listening device to be fitted on or near the ear with provision to attach an acoustic tube to conduct the sound to the ear, the device comprising

at least one motor assembly comprising an armature, a coil a magnetic yoke, and a magnet; and

a housing defining a chamber, the housing is entirely constructed of a biocompatible material and the motor assembly is being disposed in the chamber.

22. A receiver module for a personal listening device to be fitted in the ear comprising:

a motor assembly; and

a housing defining a chamber, the housing is being constructed of biocompatible material at least partially coated with a non-biocompatible thin coating, wherein the motor assembly is being disposed in the chamber.

23. A receiver module for a personal listening device to be fitted in the ear comprising

a motor assembly; and

a housing having a chamber, the housing is constructed of layers of material, an innermost layer is made of biocompatible material, wherein the motor assembly is being disposed in the chamber.

24. A receiver module for a personal listening device to be fitted in the ear comprising

a motor assembly; and

a housing having a chamber, the housing is constructed of layers of material, an innermost layer is made of biocompatible material at least partially coated with a non-biocompatible thin coating, wherein the motor assembly is being disposed in the chamber.

* * * * *