US 20150170645A1

(19) United States
(12) Patent Application Publication
DI CENSO et al.
(10) Pub. No.: US 2015/0170645 A1
(43) Pub. Date: Jun. 18, 2015

(54) NAME-SENSITIVE LISTENING DEVICE

(71) Applicant: HARMAN INTERNATIONAL INDUSTRIES, INC., Stamford, CT (US)

(72) Inventors: Davide DI CENSO, San Mateo, CA (US); Stefan MARTI, Oakland, CA (US); Ajay JUNEJA, Mountain View, CA (US)

(73) Assignee: HARMAN INTERNATIONAL INDUSTRIES, INC., Stamford, CT (US)

(21) Appl. No.: 14/106,369

(22) Filed: Dec. 13, 2013

Publication Classification

(51) Int. Cl.
G10L 15/22 (2006.01)

(52) U.S. Cl.
CPC *G10L 15/22* (2013.01); *G10L 2015/223* (2013.01)

(57) ABSTRACT

One embodiment of the present invention sets forth a technique for providing audio enhancement to a user of a listening device. The technique includes reproducing a first audio stream, such as an audio stream associated with a media player. The technique further includes detecting a voice trigger. The voice trigger may be associated with a name of a user of the listening device. The technique further includes pausing or attenuating the first audio stream and reproducing a second audio stream associated with ambient sound in response to detecting the voice trigger.

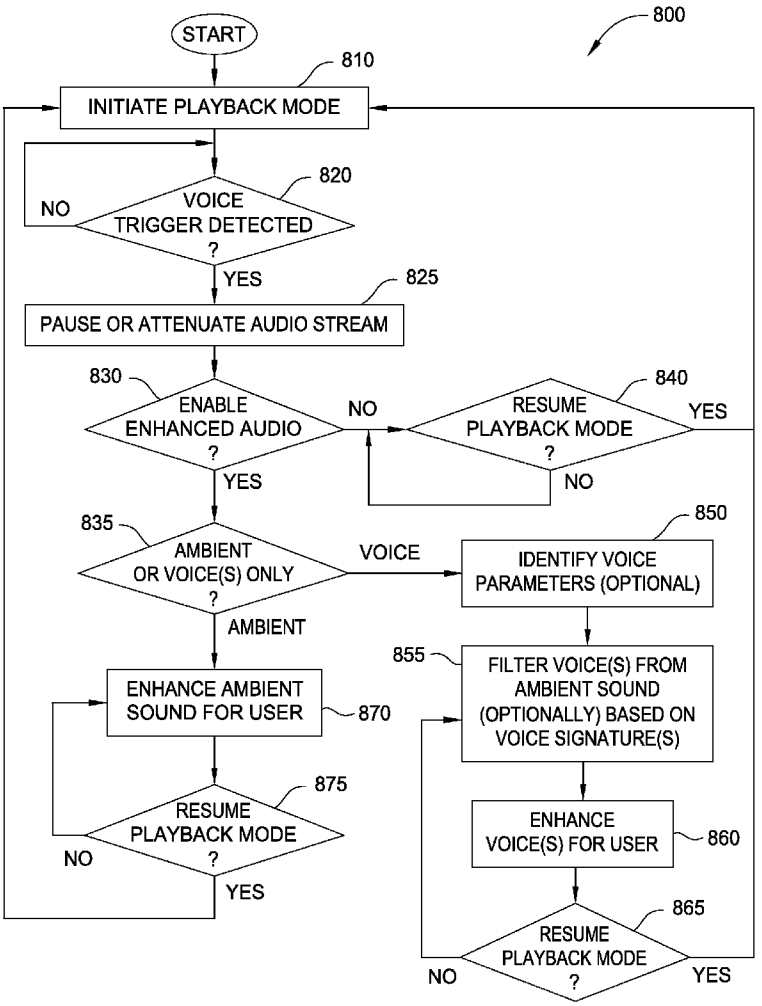

Samsung v. Zophonos
IPR2026-00084
Exhibit 1009

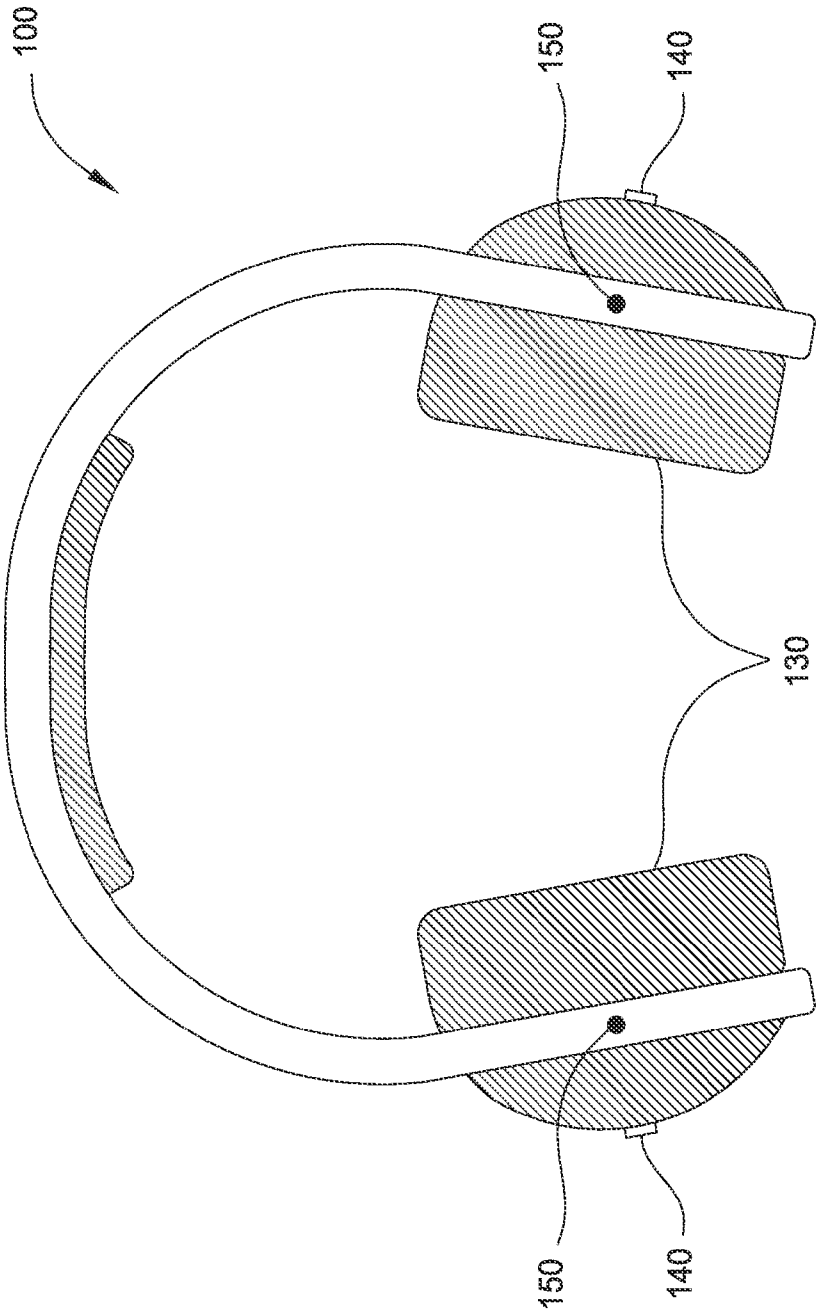

FIG. 1

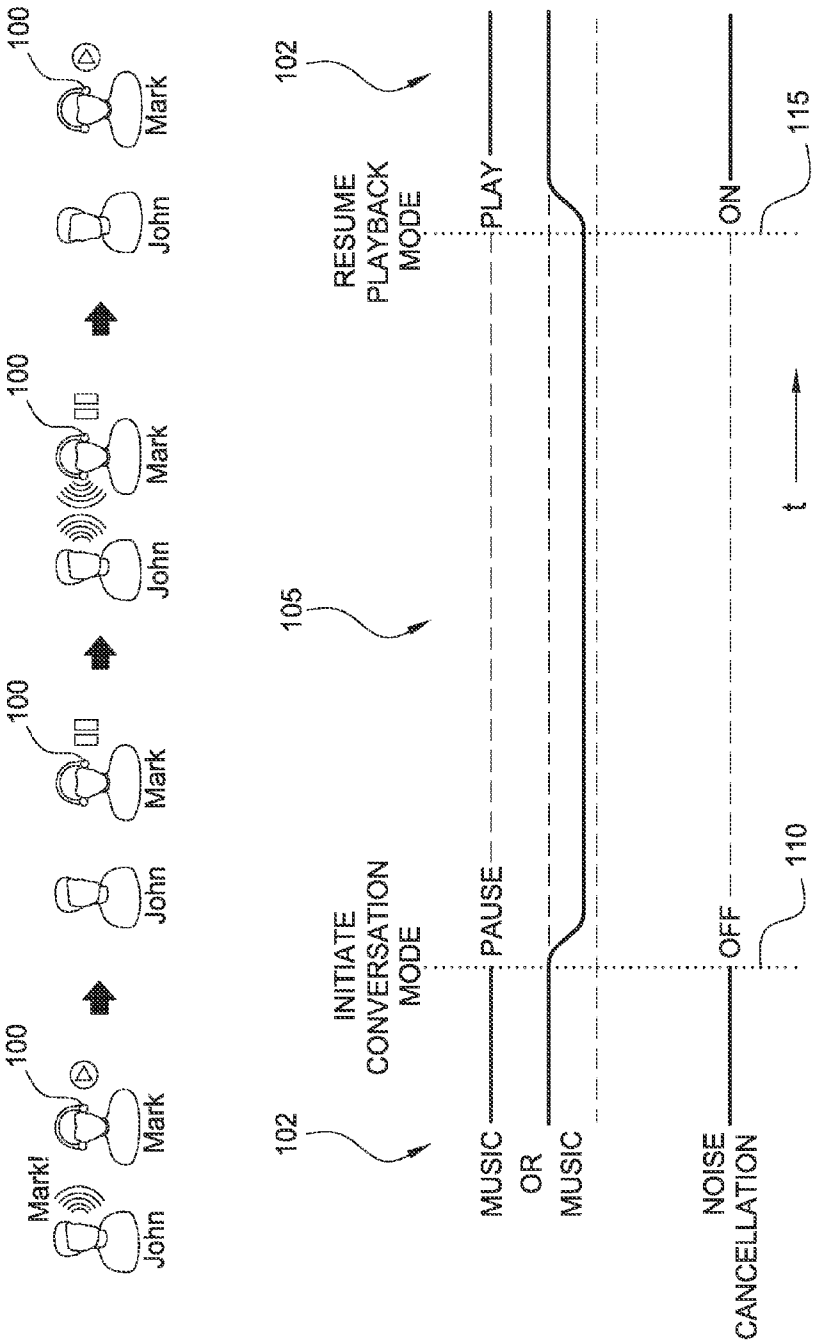
100
Mark!
John
Mark
100
John
Mark
100
John
Mark
100
John
Mark
102
INITIATE CONVERSATION MODE
105
RESUME PLAYBACK MODE
102
MUSIC OR MUSIC
PAUSE
PLAY
NOISE CANCELLATION
OFF
ON
110
115
t

FIG. 2

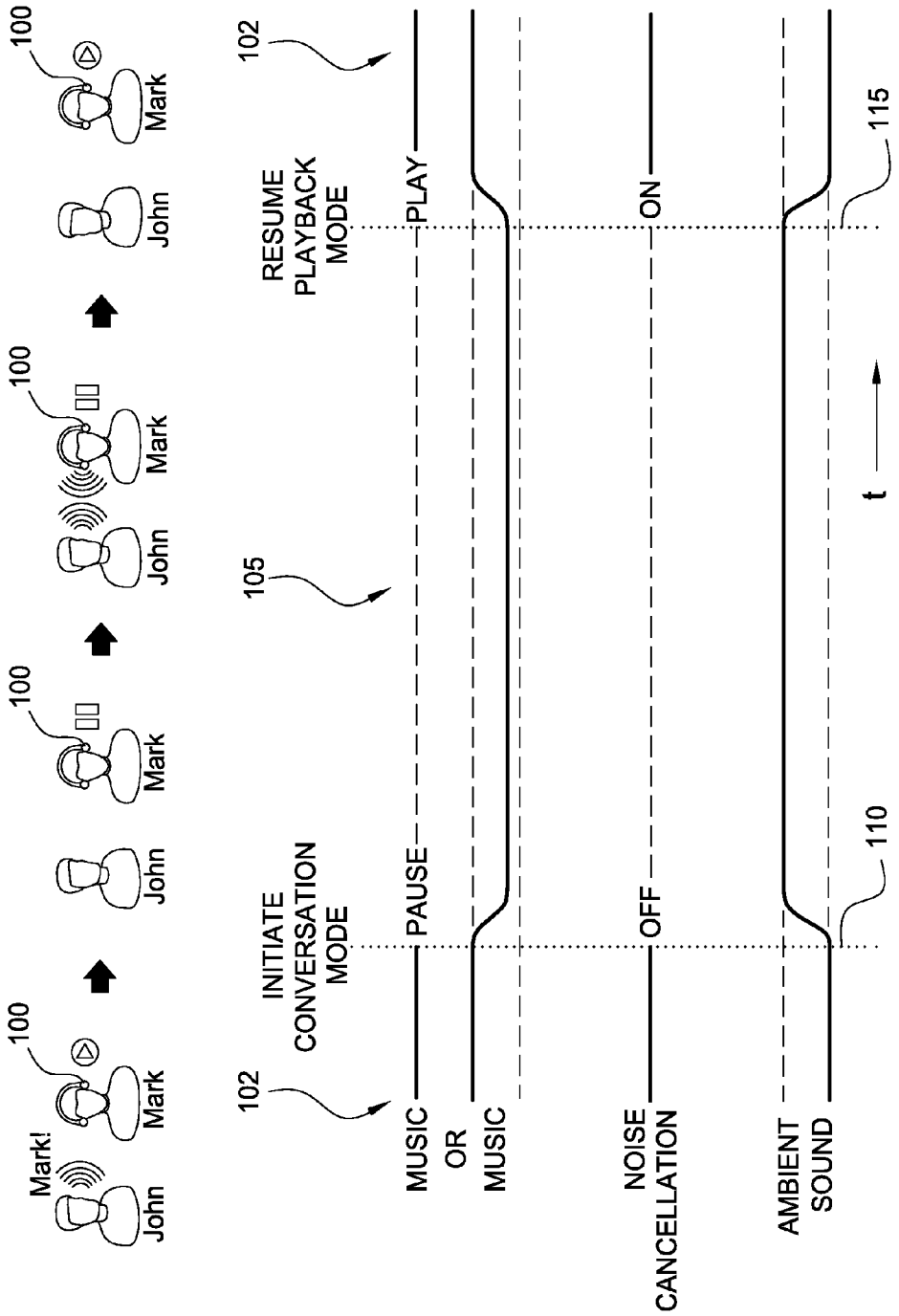
100
Mark!
John
Mark
100
John
Mark
100
John
Mark
100
John
Mark
102
INITIATE CONVERSATION MODE
105
RESUME PLAYBACK MODE
102
MUSIC OR MUSIC
PAUSE
PLAY
NOISE CANCELLATION
OFF
ON
AMBIENT SOUND
110
115
t

FIG. 3

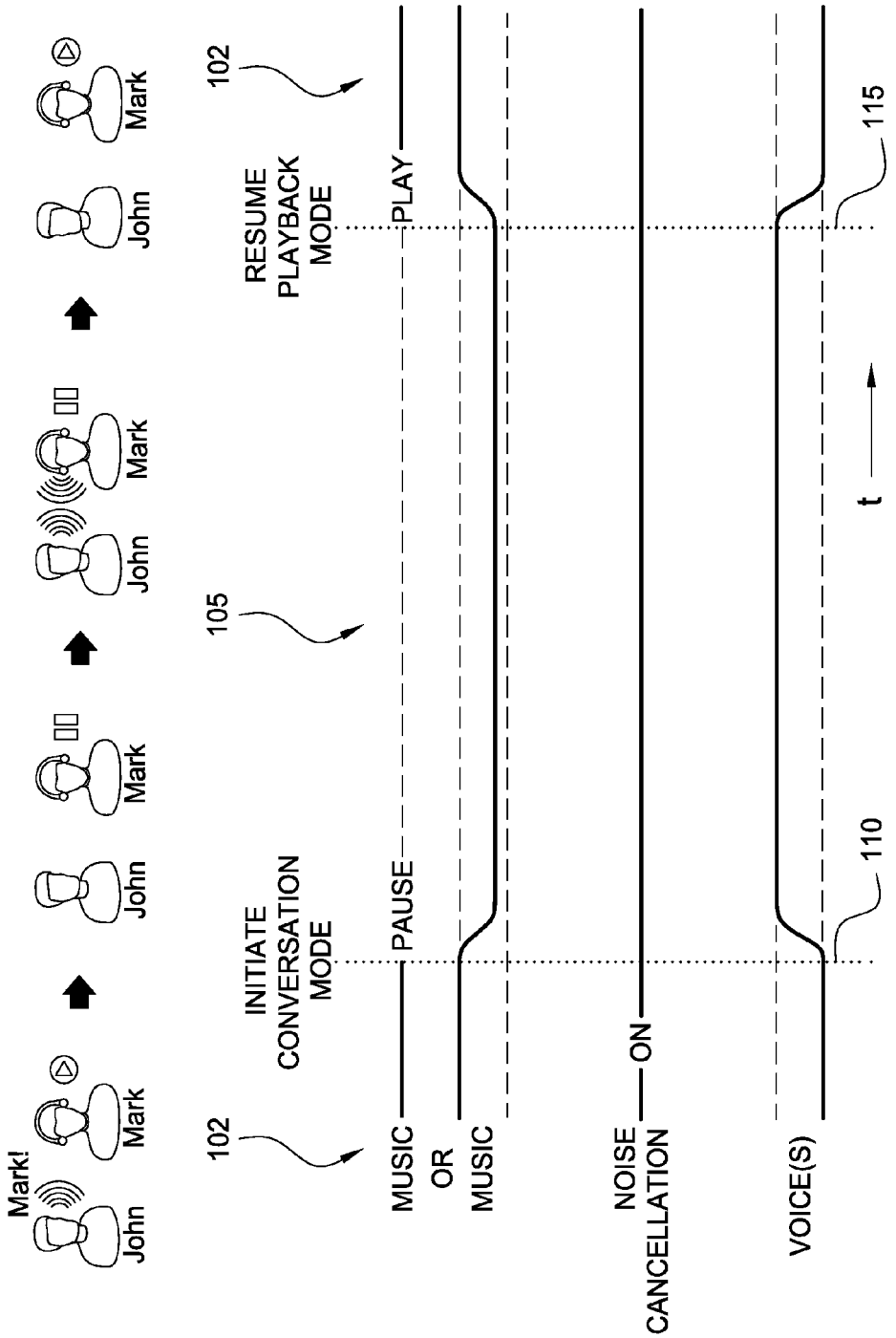
Mark!
John
Mark
John
Mark
John
Mark
John
Mark
102
INITIATE CONVERSATION MODE
105
RESUME PLAYBACK MODE
102
PAUSE
PLAY
MUSIC OR MUSIC
NOISE CANCELLATION
ON
VOICE(S)
110
115
t

FIG. 4A

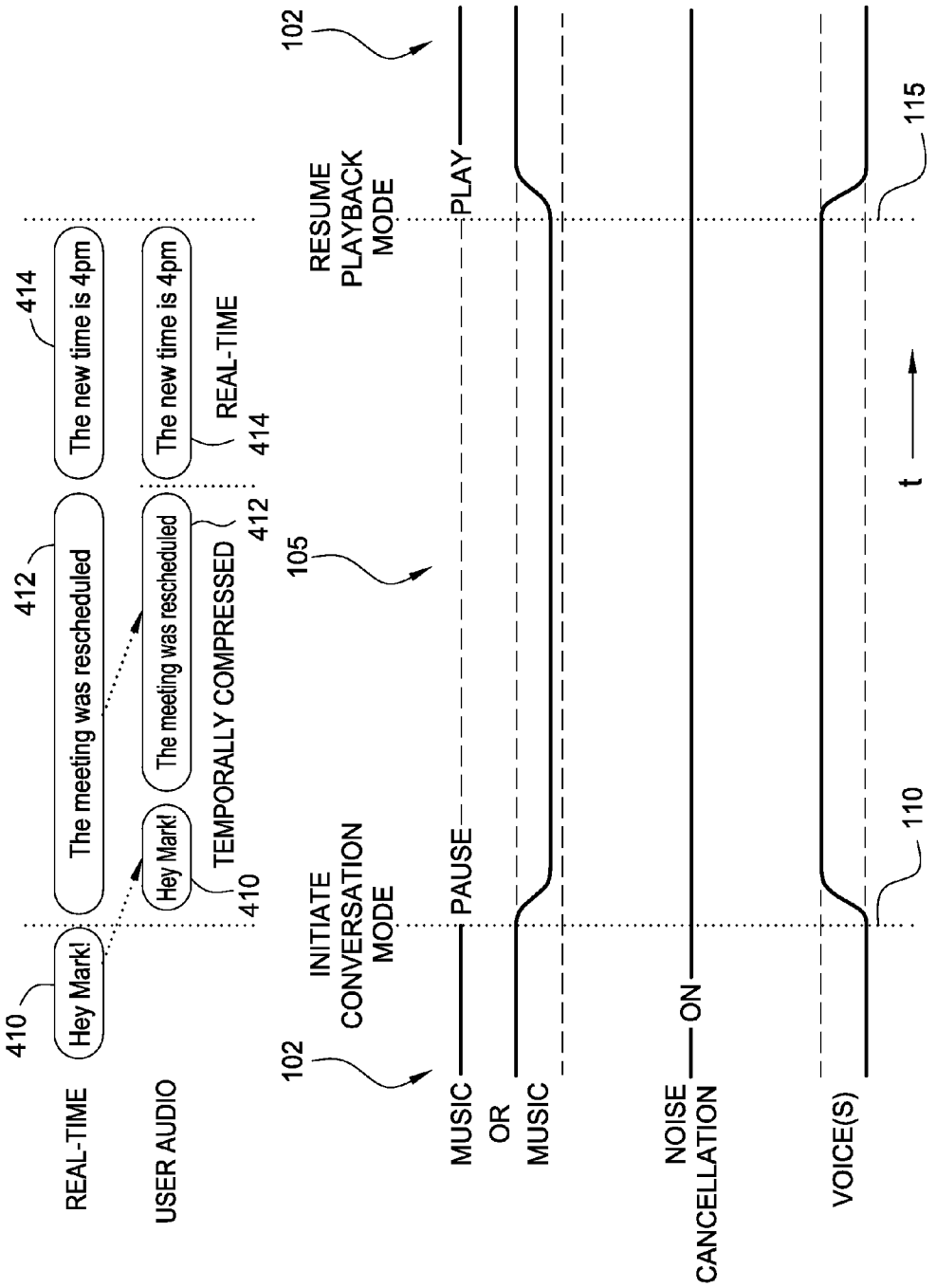
REAL-TIME
USER AUDIO
410
Hey Mark!
412
The meeting was rescheduled
414
The new time is 4pm
Hey Mark!
410
TEMPORALLY COMPRESSED
The meeting was rescheduled
412
The new time is 4pm
REAL-TIME
414
102
INITIATE CONVERSATION MODE
105
RESUME PLAYBACK MODE
102
MUSIC OR MUSIC
PAUSE
PLAY
NOISE CANCELLATION
ON
VOICE(S)
110
115
t

FIG. 4B

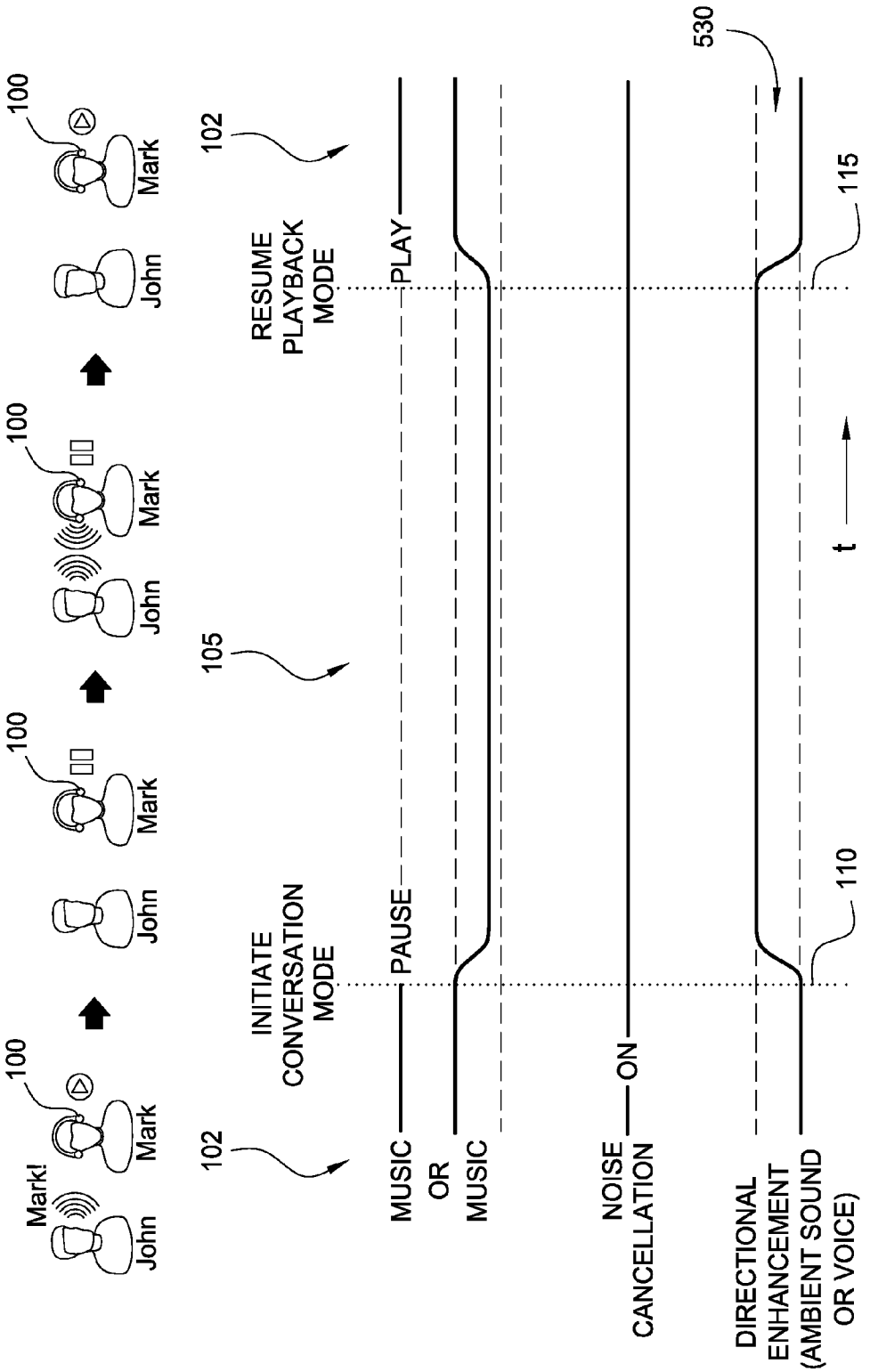
100
Mark!
John
Mark
100
John
Mark
100
John
Mark
100
John
Mark
102
INITIATE CONVERSATION MODE
105
RESUME PLAYBACK MODE
102
MUSIC OR MUSIC
PAUSE
PLAY
NOISE CANCELLATION
ON
DIRECTIONAL ENHANCEMENT (AMBIENT SOUND OR VOICE)
530
110
115
t

FIG. 5A

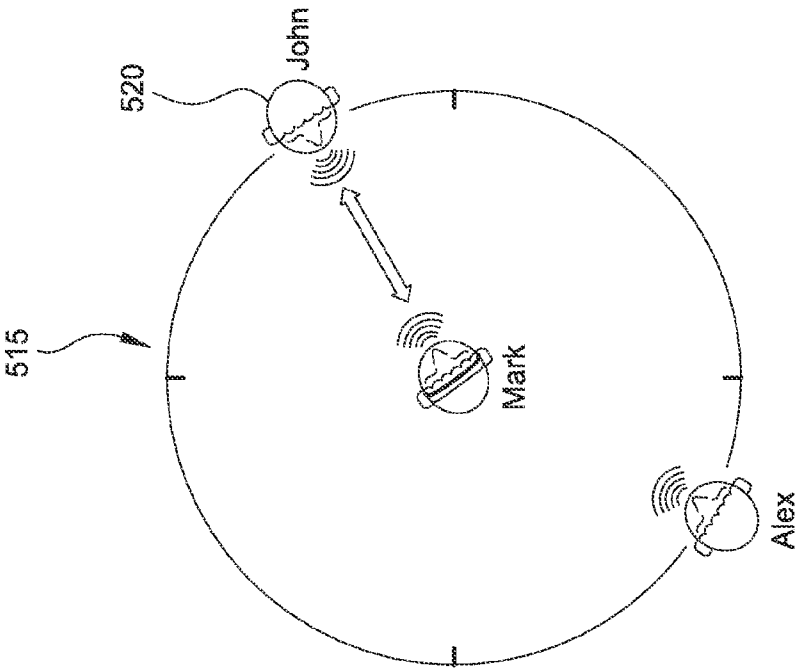

FIG. 5C

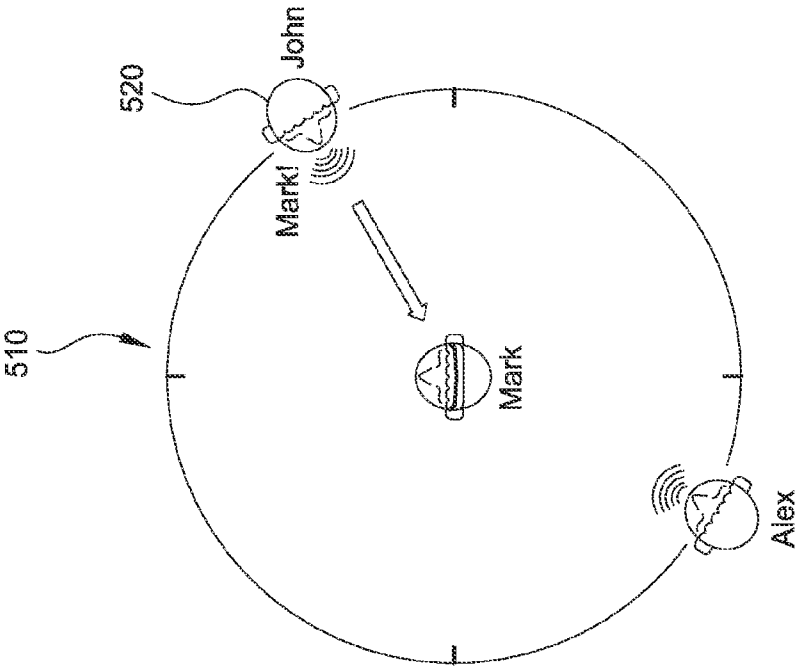

FIG. 5B

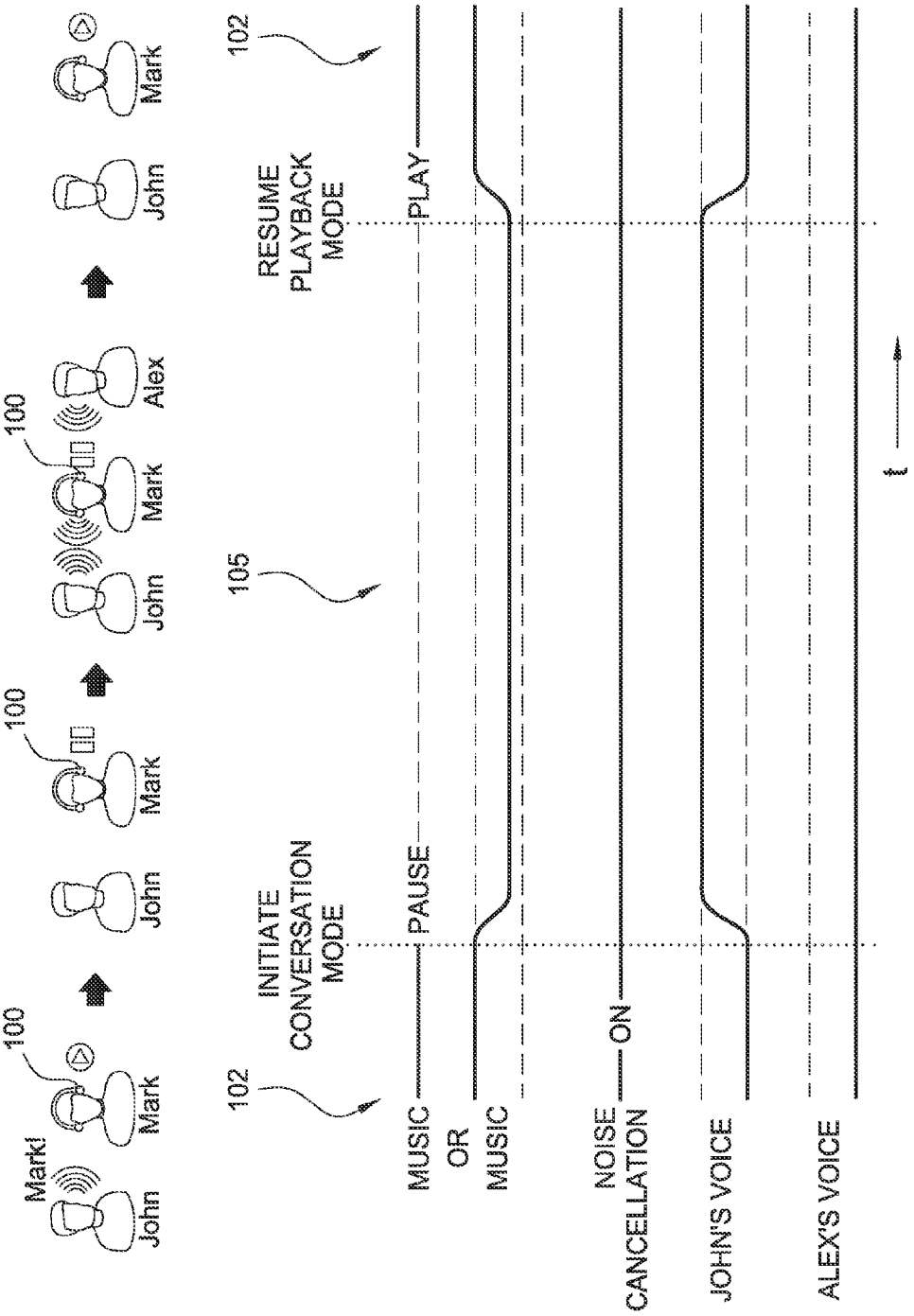
Mark!
John
Mark
100
John
Mark
100
John
Mark
100
Alex
John
Mark
102
INITIATE CONVERSATION MODE
105
RESUME PLAYBACK MODE
102
PAUSE
PLAY
MUSIC OR MUSIC
NOISE CANCELLATION
ON
JOHN'S VOICE
ALEX'S VOICE
t

FIG. 6

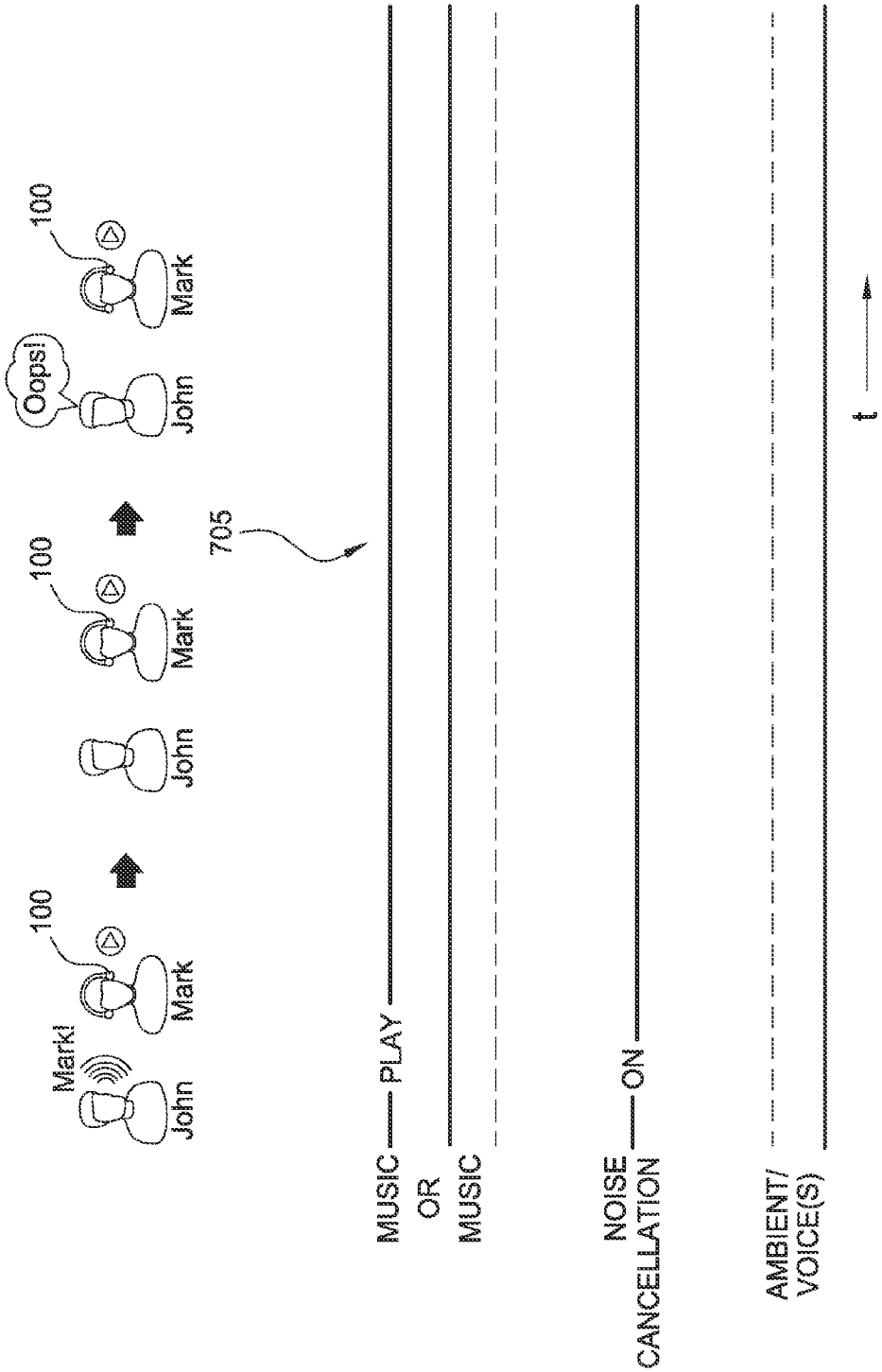
Mark!
John
Mark
100
John
Mark
100
Oops!
John
Mark
100
705
MUSIC PLAY
OR
MUSIC
NOISE CANCELLATION ON
AMBIENT/ VOICE(S)
t

FIG. 7

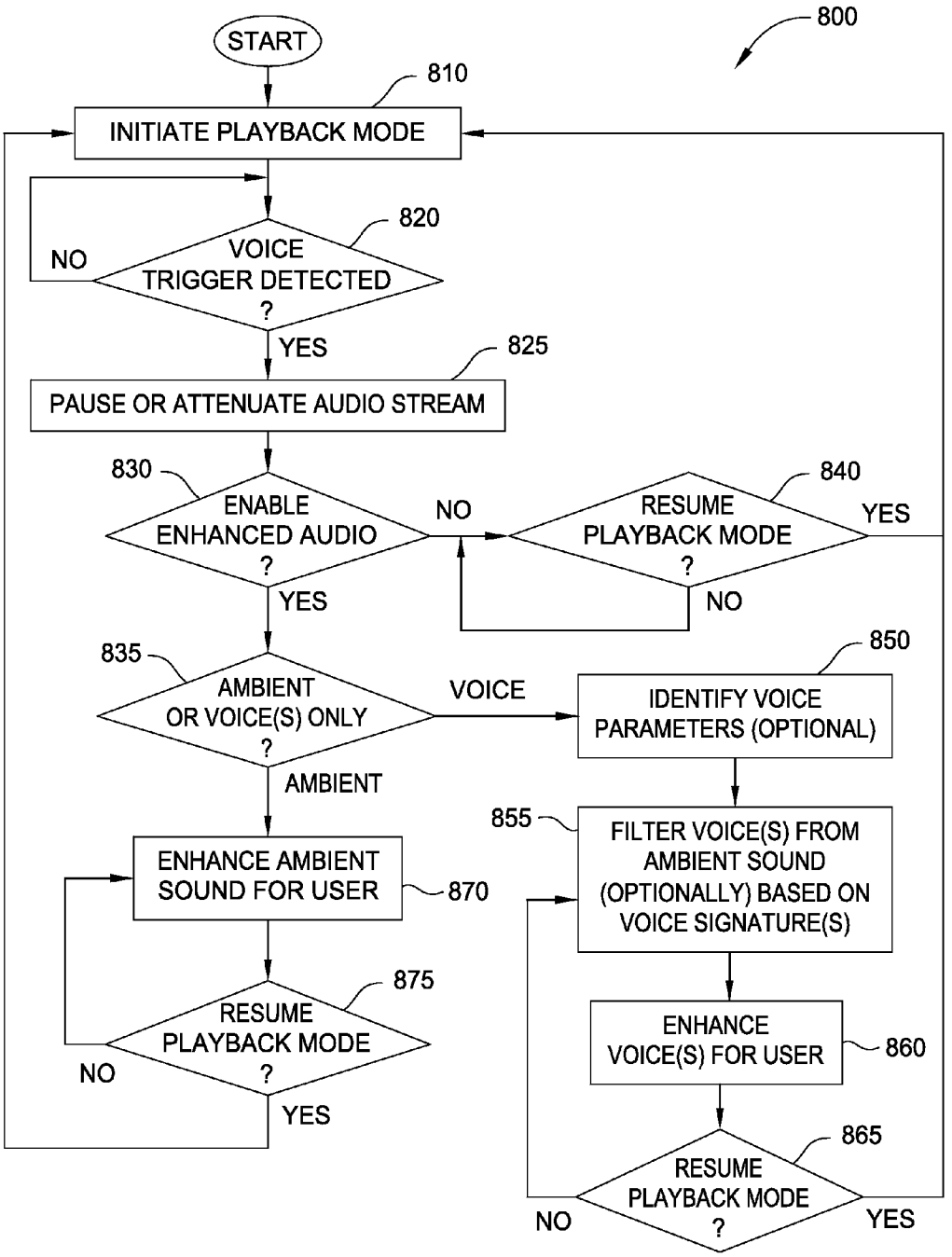
800
START
810
INITIATE PLAYBACK MODE
820
VOICE TRIGGER DETECTED ?
NO
YES
825
PAUSE OR ATTENUATE AUDIO STREAM
830
ENABLE ENHANCED AUDIO ?
NO
YES
840
RESUME PLAYBACK MODE ?
YES
NO
835
AMBIENT OR VOICE(S) ONLY ?
VOICE
AMBIENT
850
IDENTIFY VOICE PARAMETERS (OPTIONAL)
855
FILTER VOICE(S) FROM AMBIENT SOUND (OPTIONALLY) BASED ON VOICE SIGNATURE(S)
ENHANCE AMBIENT SOUND FOR USER
870
875
RESUME PLAYBACK MODE ?
NO
YES
ENHANCE VOICE(S) FOR USER
860
865
RESUME PLAYBACK MODE ?
NO
YES

FIG. 8

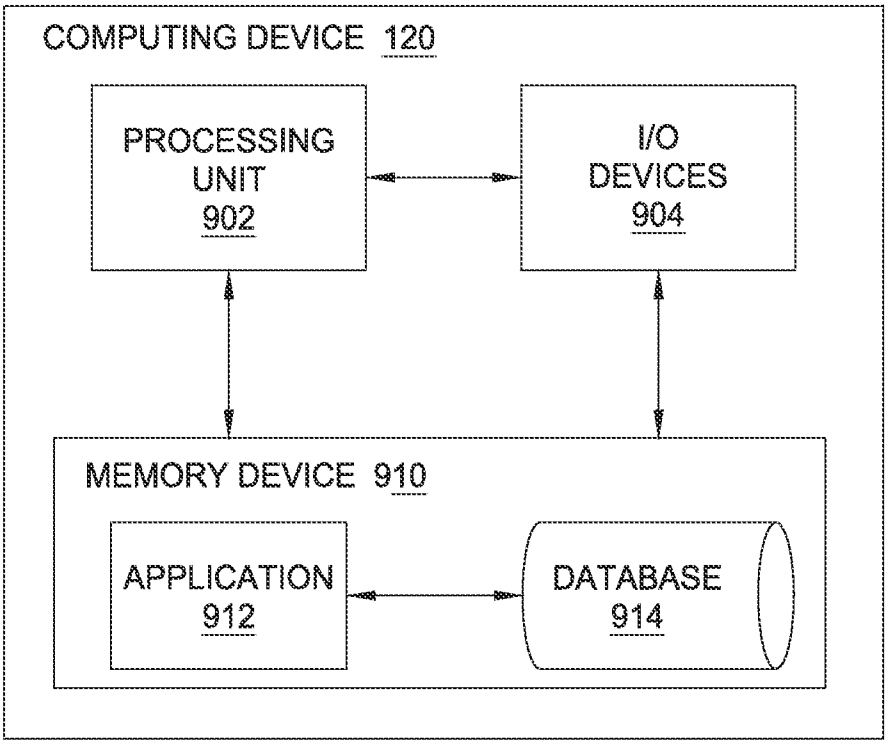
COMPUTING DEVICE 120
PROCESSING UNIT 902
I/O DEVICES 904
MEMORY DEVICE 910
APPLICATION 912
DATABASE 914

FIG. 9

NAME-SENSITIVE LISTENING DEVICE

BACKGROUND

[0001] 1. Field of the Embodiments of the Invention

[0002] Embodiments of the present invention generally relate to signal processing and, more specifically, to a name-sensitive listening device.

[0003] 2. Description of the Related Art

[0004] Recent technological advancements in the consumer electronics industry have increased the portability and affordability of various types of media players, such as computers, mobile phones, and MP3 players. As a result, more and more consumers are integrating these types of devices into their daily lives. For example, an individual may use a computer to listen to music at work or use a mobile phone to listen to music or watch a video program during the commute to and from work.

[0005] In order to avoid disturbing others, many users listen to media players using a listening device, such as a pair of headphones. However, using headphones may reduce a user's ability to hear and communicate with those around the user, isolating the user from the surrounding environment. Moreover, many headphones provide noise-isolation and/or noise-cancellation functions designed to reduce the degree to which a user can hear ambient sounds. As such, a user may not be able to hear when someone is trying to get his or her attention. Additionally, in many cases, in order to communicate with others, the user must pause the media player and/or remove the headphones in order to converse with others.

[0006] As the foregoing illustrates, techniques that enable a user to more effectively interact with his or her surroundings while using a listening device, such as a pair of headphones, would be useful.

SUMMARY

[0007] One embodiment of the present invention sets forth a method for providing audio enhancement to a user of a listening device. The method includes reproducing a first audio stream and detecting a voice trigger associated with a name of a user of the listening device. The method further includes, in response to detecting the voice trigger, pausing or attenuating the first audio stream and reproducing a second audio stream associated with ambient sound.

[0008] Further embodiments provide, among other things, a listening device and a non-transitory computer-readable medium configured to carry out method steps set forth above.

[0009] Advantageously, the disclosed technique enables the user of a listening device to listen to an audio stream without isolating himself or herself from others. Additionally, the user is able to hear when his or her name is called and converse with others without removing the listening device and without manually pausing or attenuating the audio stream. Further, the disclosed technique enables the user to indicate to others that he or she does not want to be disturbed.

BRIEF DESCRIPTION OF THE SEVERAL VIEWS OF THE DRAWINGS

[0010] So that the manner in which the above recited features of the present invention can be understood in detail, a more particular description of the invention, briefly summarized above, may be had by reference to embodiments, some of which are illustrated in the appended drawings. It is to be noted, however, that the appended drawings illustrate only typical embodiments of this invention and are therefore not to be considered limiting of its scope, for the invention may admit to other equally effective embodiments.

[0011] FIG. **1** illustrates a listening device, according to various embodiments of the present invention;

[0012] FIG. **2** illustrates a technique for disabling a noise-cancellation function of the listening device of FIG. **1** in response to detecting a voice trigger, according to various embodiments of the present invention;

[0013] FIG. **3** illustrates a technique for reproducing ambient sound with the listening device of FIG. **1** in response to detecting a voice trigger, according to various embodiments of the present invention;

[0014] FIG. **4**A illustrates a technique for processing ambient sound to enhance one or more voices in response to detecting a voice trigger, according to various embodiments of the present invention;

[0015] FIG. **4**B illustrates a technique for temporally compressing one or more voices and reproducing the temporally compressed voice(s) with the listening device of FIG. **1**, according to various embodiments of the present invention;

[0016] FIG. **5**A illustrates a technique for enhancing ambient sound and/or voice(s) received from one or more directions in response to detecting a voice trigger, according to various embodiments of the present invention;

[0017] FIGS. **5**B and **5**C are conceptual diagrams illustrating ambient sound received from various directions relative to an orientation of the user of the listening device of FIG. **1**, according to various embodiments of the present invention;

[0018] FIG. **6** illustrates a technique for processing ambient sound to enhance the voice of a specific person in response to detecting a voice trigger, according to various embodiments of the present invention;

[0019] FIG. **7** illustrates a technique for effecting a do-not-disturb mode with the listening device of FIG. **1**, according to various embodiments of the present invention;

[0020] FIG. **8** is a flow diagram of method steps for providing an audio enhancement to a user of a listening device in response to a voice trigger, according to various embodiments of the present invention; and

[0021] FIG. **9** is a block diagram illustrating a computer system configured to implement one or more aspects of the present invention.

DETAILED DESCRIPTION

[0022] In the following description, numerous specific details are set forth to provide a more thorough understanding of the embodiments of the present invention. However, it will be apparent to one of skill in the art that the embodiments of the present invention may be practiced without one or more of these specific details.

[0023] FIG. **1** illustrates a listening device **100**, according to various embodiments of the present invention. The listening device **100** may include, without limitation, speakers **130**, one or more microphones **140**, and one or more visual sensors **150**. The speakers **130** are configured to reproduce one or more audio streams for a user of the listening device **100**. The microphone(s) **140** are configured to record ambient sound, including the voice(s) of one or more people near the user of the listening device **100**. The visual sensor(s) **150** are configured to acquired images of the surrounding environment. For example, and without limitation, the visual sensor(s) **150** may be configured to acquire images of people near the user of the listening device **100** and/or images that enable the listening

device **100** to determine the orientation of the user relative to the surrounding environment, as described below in further detail in conjunction with FIGS. **5**A-**5**C and **6**.

[0024] In various embodiments, the listening device **100** may include a pair of headphones, such as the over-the-ear headphones shown in FIG. **1**. However, any type of wired or wireless headphones, including circumaural headphones, supra-aural headphones, and in-ear headphones, may be used to perform the techniques described herein. Further, the listening device **100** may include noise-isolation characteristics and/or a noise-cancellation function. In other embodiments, the listening device **100** may be any acoustic device that is able to amplify and reproduce sound for a user, including an assistive medical device, such as a hearing aid, or a mobile communication device, such as a Bluetooth® headset.

[0025] FIG. **2** illustrates a technique for pausing or attenuating an audio stream being reproduced by the listening device **100** of FIG. **1** and disabling a noise-cancellation function of the listening device **100** in response to detecting a voice trigger, according to various embodiments of the present invention. As described above, using a listening device, such as listening device **100**, reduces a user's ability to hear and communicate with others. As a result, the user may be unable to communicate with others when using the listening device **100** and may not be able to hear when someone is attempting to get his or her attention. As such, the listening device **100** may be configured to determine that someone is trying to get the user's attention and, in response, the listening device **100** may pause or attenuate an audio stream to which the user is listening. In various embodiments, this determination is made by detecting a voice trigger, such as the name of the user of the listening device **100**. For example, and without limitation, as shown in FIG. **1**, the listening device **100** may detect that someone has spoken the user's name and, in response, the listening device **100** may enter a conversation mode **105** at time **110**. While the listening device **100** is in the conversation mode **105**, the audio stream being reproduced by the listening device **100** may be paused or attenuated. Accordingly, the user is notified that someone is attempting to get his or her attention and is provided with an opportunity to communicate with that person.

[0026] Upon detecting a voice trigger, the listening device **100** may transmit a pause command or attenuation command to the media player. In addition to pausing or attenuating an audio stream being reproduced by the listening device **100**, if the listening device **100** includes a noise-cancellation function, then the noise-cancellation function may be temporarily disabled while the listening device is in the conversation mode **105**. Disabling the noise-cancellation function allows the user of the listening device **100** to hear ambient sound, including the voice of the person who is attempting to get the user's attention. Additionally, by disabling the noise-cancellation function, the user can participate in a conversation with others.

[0027] Once the user is finished communicating with others, the user may resume the playback mode **102**, as shown at time **115**. Upon resuming the playback mode **102**, the audio stream is resumed and noise cancellation may be enabled, allowing the user to continue enjoying the audio stream. In some embodiments, the playback mode **102** may be resumed in response to a playback command issued by the user. For example, and without limitation, after the user is finishing with a conversation, the user may press a button on the listening device **100** or on a media player to which the listening device **100** is connected to resume the playback mode **102**. In one example, a button that enables the user to resume playback may be located on a cable, such as a headphone cable, that couples the listening device **100** to the media player. In other embodiments, the listening device **100** may determine that no voices have been detected for a threshold period of time and, in response, the listening device **100** may automatically resume the playback mode **102**. In yet another embodiment, the listening device **100** may determine that a particular person's voice has not been detected for a threshold period of time and, in response, the listening device **100** may automatically resume the playback mode **102**. This determination may be based on voice parameters stored in the listening device **100**, as is described in further detail below in conjunction with FIG. **6**.

[0028] A voice trigger may include the name of the user of the listening device **100**. In some embodiments, the voice trigger(s) may be selected by the user of the listening device **100** and stored in a memory associated with the listening device **100**. The user may select and store multiple voice triggers, including shortened versions of the user's given name or surname, nicknames, and/or other words or phrases that may be used to initiate a conversation with the user. In other embodiments, the voice trigger(s) may be based on the speech patterns and/or voice parameters of one or more specific persons. For example, and without limitation, the listening device **100** may be configured to analyze ambient sound and enter the conversation mode **105** only when the voice of a friend, family member, or co-worker is detected. Accordingly, the user will not be interrupted if a stranger or unauthorized person uses a word or phrase associated with a voice trigger.

[0029] A voice trigger may be detected via the one or more microphones **140** associated with the listening device **100**. For example, and without limitation, the one or more microphones **140** may be disposed on the listening device **100**, enabling the listening device **100** to more accurately monitor ambient sound at the ear-level of the user. In other embodiments, one or more microphones **140** may be disposed on a cable associated with the listening device **100** and/or in a media player to which the listening device **100** is connected (e.g., via a wired connection or wireless connection). Additionally, processing of ambient sound acquired by the one or more microphones **140** may be performed by a computing device **120** included in the listening device **100** and/or included in a media player to which the listening device **100** is connected.

[0030] FIG. **3** illustrates a technique for reproducing ambient sound with the listening device **100** of FIG. **1** in response to detecting a voice trigger, according to various embodiments of the present invention. As shown, a voice trigger is detected by the listening device **100** at time **110** and, in response, the listening device **100** enters a conversation mode **105**. While in the conversation mode **105**, an audio stream being reproduced by the listening device **100** is paused or attenuated, and ambient sound acquired by the listening device **100** is reproduced for the user.

[0031] As described above, the listening device **100** may include noise-isolating characteristics. For example, and without limitation, many types of headphones (e.g., circumaural, in-ear monitors (IEMs), etc.) are configured provide passive noise-isolation by forming a seal with the user's head and/or ear canal. Consequently, at time **110**, even when the optional active noise-cancellation is disabled, the user may be

unable to hear ambient sounds, such as voices. Accordingly, the listening device **100** may operate in an acoustically transparent mode such that ambient sound that has been acquired by the one or more microphones **140** associated with the listening device **100** is reproduced for the user. Reproducing ambient sound with the listening device **100** enables the user to participate in a conversation or listen to the surrounding environment without removing the listening device **100**.

[0032] Ambient sound may be reproduced by the listening device **100** in a spatially correct manner. In some embodiments, the listening device **100** may acquire the ambient sound using more than one microphone **140** and reproduce the ambient sound using multiple audio channels (e.g., two or more audio channels) such that the user perceives the ambient sound as coming from the correct direction. For example, if ambient sound is being received from a direction to the right of the user, then the listening device **100** may reproduce the ambient sound at a higher level in the right audio channel than in the left audio channel. Thus, in such embodiments, the listening device **100** operates in an acoustically transparent mode such that ambient sound is reproduced with spatial accuracy.

[0033] Furthermore, in embodiments where the listening device **100** is an assistive device, such as a hearing aid, ambient sound may be amplified to an elevated level to enable a user with a hearing impairment to hear voices and other ambient sounds. For example, and without limitation, the listening device **100** may detect that a person has spoken the user's name. In response, the listening device **100** may acquire and amplify the ambient sound to an appropriate level, enabling a user with a hearing impairment to more effectively communicate and interact with others.

[0034] Once the user is finished communicating with others, the listening device **100** may resume the playback mode **102** at time **115**. Once the playback mode **102** is resumed, noise cancellation may be enabled and the reproduction of ambient sound may be terminated. Resuming the playback mode **102** may be performed according to any of the manual techniques and/or automatic techniques described above in conjunction with FIG. **2**.

[0035] FIG. **4**A illustrates a technique for processing ambient sound to enhance one or more voices with the listening device **100** of FIG. **1** in response to detecting a voice trigger, according to various embodiments of the present invention. As shown, a voice trigger is detected by the listening device **100** at time **110** and, in response, the listening device **100** enters the conversation mode **105**. While in the conversation mode **105**, an audio stream being reproduced by the listening device **100** is paused or attenuated, and voice(s) acquired by one or more microphones **140** associated with the listening device **100** are reproduced for the user.

[0036] Under certain circumstances, a user of the listening device **100** may wish to keep the optional noise-cancellation function enabled while communicating with others. For example, in a noisy environment, such as at a busy workplace or on an airplane, the user may want to hear only the voice(s) of the person(s) to which he or she is talking, but not other ambient sounds (e.g., traffic noise, noises associated with office equipment, etc.). Consequently, upon entering the conversation mode **105** at time **110**, the listening device **100** may continue to perform noise-cancellation. However, in order to enable the user to communicate with others without removing the listening device **100**, the listening device **100** may enhance one or more voices in the ambient sound and reproduce the voice(s) for the user. Alternatively, the noise-cancellation function may be modified such that the user is able to hear voice(s) but cannot hear other ambient sounds. That is, the noise-cancellation function may be configured to perform noise-cancellation on ambient sounds other than voices, allowing the voices to pass through to the user. As a result, the user can participate in a conversation without being distracted by other sounds in a noisy environment. In yet another embodiment, the user is able to hear the voices of one or more specific people, but noise-cancellation is performed with respect to other voices. In such embodiments, the user is able to speak to one or more specific people without being distracted by the voices of others in the surrounding environment.

[0037] In order to enhance and reproduce voice(s) included in ambient sound, one or more microphones **140** associated with the listening device **100** are used to acquire the ambient sound. The computing device **120** (or by another processor associated with the listening device **100**) then processes the ambient sound to isolate the voice(s) from other ambient sounds and/or to amplify the voice(s) relative to the other ambient sounds. In some embodiments, the ambient sound is processed by filtering the ambient sound to discard one or more frequency ranges. For example, and without limitation, the ambient sound may be filtered to retain one or more frequency ranges associated with the voice of one or more persons with which the user is communicating and discard one or more other frequency ranges. The determination of which frequency ranges should be retained and discarded when processing the ambient sound may be based on average voice parameters of the general population. For example, and without limitation, common frequency range(s) of voices of people in the general population, or a specific portion of the population, may be stored in a memory associated with the listening device **100** and used to filter the ambient sound. In addition, the determination of which frequency ranges are retained and discarded when processing the ambient sound may be based on voice parameters associated with one or more specific persons, as described below in further detail in conjunction with FIG. **6**.

[0038] In other embodiments, the ambient sound is processed by filtering the ambient sound using digital signal processing. For example, and without limitation, one or more algorithms and/or mathematical models may be used to process the ambient sound and/or compare the ambient sound to digital voice parameters (e.g., a digital voice signature). The digital voice parameters may be based on voice characteristics (e.g., speech patterns, acoustic patterns, frequency ranges, etc.) of the general population, or the digital voice parameters may be based on voice characteristics of one or more specific people. Based on the comparison between the ambient sound and the digital voice parameters, ambient sound data may be then retained, modified, or discarded. The processed sound data, including the enhanced voice(s), may then be reproduced for the user by the listening device **100**.

[0039] Voice(s) may be reproduced by the listening device **100** in a spatially correct manner, as described above in conjunction with FIG. **3**. For example, if a voice is received from a direction to the left of the user, then the listening device **100** may reproduce the ambient sound at a higher level in the left audio channel than in the right audio channel. Thus, in such embodiments, the listening device **100** reproduces voices with spatial accuracy, enabling the user to more effectively communicate with others.

[0040] In another embodiment, the optional noise-cancellation function is disabled at time **110** and the listening device **100** acquires and reproduces one or more voices, as described above. In yet another embodiment, the listening device **100** does not include a noise-cancellation function and, at time **110**, the listening device **100** acquires and reproduces one or more voices, as described above. In these embodiments, the user may be able to hear other ambient sounds while listening to voice(s) that have been enhanced and reproduced by the listening device **100**. Further, in either embodiment, passive noise-isolation provided by the listening device **100** may still reduce the degree to which the user can hear ambient sound. Thus, under such circumstances, active noise-cancellation may not be necessary.

[0041] FIG. **4**B illustrates a technique for temporally compressing one or more voices and reproducing the temporally compressed voice(s) with the listening device **100** of FIG. **1**, according to various embodiments of the present invention. In addition to enhancing one or more voices included in the ambient sound, portions of the ambient sound may be temporally compressed to enable the user to hear the voice trigger and/or other sounds that occurred before the listening device **100** entered the conversation mode **105**. Thus, the user is able to "catch up" to real-time while still hearing the beginning of a conversation. For example, and without limitation, as shown in FIG. **4**B, a voice trigger portion **410** and conversation portion **412** may be temporally compressed and reproduced for the user. Once the user has listened to the temporally compressed portions **410**, **412** of the conversation, subsequent portions of the conversation (e.g., conversation portion **414**) may be reproduced in real-time.

[0042] Acquisition and temporal compression of portions of a conversation that occurred prior to the detection of a voice trigger may be performed using a circular buffer. In particular, a circular buffer enables the listening device **100** to buffer ambient sound acquired from the surrounding environment and retain the ambient sound for a given period of time. Accordingly, once a voice trigger is detected, the listening device **100** is able to access ambient sound data that was recorded during a certain period of time (e.g., seconds, minutes, etc.) prior to detection of the voice trigger. In some embodiments, the period of time before the voice trigger for which ambient sound is processed and/or reproduced is configurable. For example, and without limitation, a user may specify that, upon detecting a voice trigger, the listening device **100** should acquire, from the circular buffer, the five seconds of ambient sound or voice(s) that were recorded prior to detection of the voice trigger. The five seconds of ambient sound or voice(s) may then be temporally compressed and reproduced by the listening device **100**. In other embodiments, the period of time before the voice trigger for which ambient sound is processed and/or reproduced is based on an analysis of ambient sound data stored in the circular buffer. For example, and without limitation, ambient sound recorded prior to detection of the voice trigger may be analyzed to determine the time at which the speech associated with the voice trigger began, and the ambient sound or voice(s) acquired after that time may be reproduced by the listening device **100**.

[0043] FIG. **5**A illustrates a technique for enhancing ambient sound or voice(s) received from one or more directions and reproducing the ambient sound or voice(s) with the listening device **100** of FIG. **1** in response to detecting a voice trigger, according to various embodiments of the present invention. As described above in conjunction with FIGS. **3** and **4**A, ambient sound or voice(s) may be reproduced by the listening device **100** in a spatially correct manner. That is, the listening device **100** may acquire the ambient sound using multiple microphones **140** and reproduce the ambient sound using multiple audio channels such that the user perceives the ambient sound as coming from the correct direction. However, in addition to spatially correct reproduction, the listening device **100** may enhance ambient sound or voice(s) **530** coming from one or more directions relative to an orientation of the user. For example, the one or more microphones **140** with which ambient sound is acquired may be used to determine the direction from which a voice trigger was received. The listening device **100** may then enhance ambient sound or voice(s) **530** that are subsequently received from that direction. Further, the enhanced ambient sound or voice(s) **530** received from the one or more directions may optionally be reproduced for the user in a spatially accurate manner. As a result, the listening device **100** may reproduce ambient sound or voice(s) **530** from one or more directions while attenuating or removing other ambient sound or voice(s) that may distract the user.

[0044] After determining the direction(s) from which ambient sound or voice(s) are being received, the orientation of the user relative to ambient sound or voice(s) may change. For example, a voice trigger may be received from one direction relative to the user. However, upon hearing the voice trigger, the user may turn to look at the person to whom he or she is speaking Consequently, the orientation of the user relative to the direction from which the voice trigger was received may change. This scenario is depicted in FIGS. **5**B and **5**C, which are conceptual diagrams illustrating ambient sound received from various directions relative to an orientation of the user of the listening device **100**, according to various embodiments of the present invention. As shown, at time **510**, a voice trigger is detected by the listening device **100** from a certain direction relative to the orientation of the user. For example, and without limitation, the microphones **140** associated with the listening device **100** may be used to determine that the voice trigger was received from a direction that is approximately 60 degrees from the direction that the user is facing. However, at time **515**, when the user turns to look at the interlocutor **520**, the interlocutor **520** is directly in front of the user, as shown in FIG. **5**C. Accordingly, the listening device **100** may include one or more sensors that are designed to track the movement of the user and/or the movement of people around the user. For example, and without limitation, the listening device **100** may include a compass that tracks the direction from which a voice trigger was received. The listening device **100** may then enhance ambient sound or voice(s) from that particular direction, even when the user changes his or her orientation. For example, with respect to FIG. **5**C, the listening device **100** may determine (e.g., based on a compass measurement), that the voice trigger was received from a direction that is now approximately directly in front of the user (i.e., zero degrees). Thus, in FIGS. **5**B and **5**C, the user may participate in a conversation with John without being interrupted by Alex despite changes to the user's orientation.

[0045] Additionally, the listening device **100** may include visual sensors **150** (e.g., cameras, light sensors, etc.) that detect the movement of people around the user and adjust the directions from which ambient sound or voice(s) are enhanced based on the movement. For example, and without

limitation, a visual sensor **150** may determine that the interlocutor **520** was previously located in a direction that was approximately 60 degrees relative the direction that the user was facing, but, after a change to the orientation of the user, the interlocutor **520** is now directly in front of the user. Accordingly, the listening device **100** will then enhance ambient sound or voice(s) received from a direction that is directly in front of the user. Further, the listening device **100** may continue to track the location(s) of the person(s) to which the user is talking and enhance ambient sound or voice(s) received from those locations, such as if Mark continues to change his head orientation and/or if Mark and John begin to move with respect to one another.

[0046] Although FIG. **5**A illustrates that the optional noise-cancellation function may be enabled when the listening device **100** enters the conversation mode **105**, in other embodiments, the noise-cancellation mode may be disabled when entering the conversation mode **105**. In still other embodiments, the listening device **100** may not include a noise-cancellation mode and may instead rely on passive noise-isolation.

[0047] FIG. **6** illustrates a technique for processing ambient sound to enhance the voice of a specific person and reproducing the voice with the listening device **100** of FIG. **1** in response to detecting a voice trigger, according to various embodiments of the present invention. As described above, voice parameters (e.g., digital voice parameters, frequency ranges, etc.) associated with one or more specific people may be acquired and stored in a memory associated with the listening device **100**. As such, the listening device **100** may distinguish a specific person's voice from other voices included in the ambient sound, enabling the listening device **100** to enhance and reproduce only that specific person's voice for the user.

[0048] In various embodiments, voice parameters may be acquired and stored for a specific person using a training sequence, such as a sequence of words that the person speaks into a microphone (e.g., microphone **140**) associated with the listening device **100**. The computing device **120** may then analyze the sequence of words to determine the frequency range(s) of the person's voice as well as the other voice characteristics described above. In other embodiments, voice parameters may be acquired by a separate device and transmitted to and stored in a memory associated with the listening device **100** at a later time. In still other embodiments, voice parameters may be acquired based at least partially on the voice trigger that is detected by the listening device **100**. For example, and without limitation, upon detecting a voice trigger, the listening device **100** may analyze the speaker's voice and determine voice parameters, such as the frequency range (s) of the person's voice or a digital signature associated with the voice. The voice parameters may then be used to enhance that specific person's voice, enabling the user of the listening device **100** to participate in a conversation with a person for which voice parameters were not previously stored.

[0049] As shown in FIG. **6**, the listening device **100** is using voice parameters associated with John's voice to enhance his voice and reproduce the voice for the user. However, Alex's voice, which includes different voice parameters than John's voice, is not enhanced by the listening device **100**. Consequently, the user is able to hear John's voice, but may not be able to hear Alex's voice. Although FIG. **6** shows that the sound level of Alex's voice is zero, in some embodiments, John's voice parameters may share commonalities with Alex's voice parameters. As a result, although the user will hear a louder reproduction of John's voice relative to Alex's voice, the user may still be able to hear Alex' voice (e.g., at a lower sound level).

[0050] As described above, although FIG. **6** illustrates that the optional noise-cancellation function may be enabled when the listening device **100** enters the conversation mode **105**, in other embodiments, the noise-cancellation mode may be disabled when entering the conversation mode **105**. In still other embodiments, the listening device **100** may not include a noise-cancellation mode and may instead rely on passive noise-isolation.

[0051] FIG. **7** illustrates a technique for effecting a do-not-disturb mode **705** with the listening device **100** of FIG. **1**, according to various embodiments of the present invention. Under certain circumstances, a user may not want to be disturbed by others. Accordingly, the user may place the listening device **100** in a do-not-disturb mode **705**. While the do-not-disturb mode **705** is enabled, the listening device **100** does not enter the conversation mode **105** in response to voice triggers. Thus, when someone uses a voice trigger, the listening device **100** continues to play the audio stream and the optional noise-cancellation function remains enabled.

[0052] Additionally, the listening device **100** may include one or more visual indicators and/or auditory indicators that indicate to others that the user does not want to be disturbed. For example, and without limitation, the listening device **100** may contain one or more lights (e.g., light-emitting diodes (LEDs)) that glow a certain color (e.g., red) when the listening device **100** is in the do-not-disturb mode **705** and glow a different color (e.g., green) when the listening device **100** is not in the do-not-disturb mode **705**. In other embodiments, the listening device **100** may be made of a translucent material such that the listening device **100** itself glows a certain color when the do-not-disturb mode **705** is enabled and glows a different color when the do-not-disturb mode **705** is not enabled. In still other embodiments, the listening device **100** may display text (e.g., "Do Not Disturb!") using various display technologies, such as an organic light-emitting diode (OLED) display, when the do-not-disturb mode **705** is enabled. Further, the listening device **100** may include one or more speakers that generate a do-not-disturb indicator. For example, and without limitation, the listening device **100** may generate a do-not-disturb indicator, such as a beeping sound, when someone attempts to talk to the user of the listening device **100**. In other embodiments, the listening device **100** may transmit a do-not-disturb indicator to a communication program (e.g., a text or audio/video conferencing program) running on an external computer. For example, and without limitation, the listening device **100** may transmit a message or status update to a communication program indicating that the user of the listening device **100** does not want to be disturbed.

[0053] While the listening device **100** is in the do-not-disturb mode **705**, ambient sound may be recorded and stored in a memory associated with the listening device **100** to enable the user to listen to what was missed at a later time. In some embodiments, a replay of ambient sound may be initiated in response to a replay command issued by the user. For example, and without limitation, in order to initiate a replay of ambient sound, the user may press a button on the listening device **100**, a button on a media player to which the listening device **100** is connected, and/or a button on a cable, such as a headphone cable, that couples the listening device **100** to the media player. In other embodiments, the listening device **100**

may initiate a replay of ambient sound in response to a voice command or a gesture, such as a hand gesture or a head gesture, issued by the user. In addition, the recorded ambient sound may be analyzed by the listening device **100** to determine (e.g., using voice parameters) the identities of the people who were talking while the listening device **100** was in the do-not-disturb mode **705**.

[0054] FIG. **8** is a flow diagram of method steps for providing an audio enhancement to a user of a listening device in response to a voice trigger, according to various embodiments of the present invention. Although the method steps are described in conjunction with FIGS. **1-6**, persons skilled in the art will understand that any system configured to perform the method steps, in any order, falls within the scope of the present invention.

[0055] As shown, a method **800** begins at step **810**, where the listening device **100** initiates the playback mode **102**. While in the playback mode **102**, the listening device **100** reproduces an audio stream and may optionally enable a noise-cancellation function. At step **820**, the listening device **100** determines whether a voice trigger has been detected using one or more microphones **140** associated with the listening device **100**. If a voice trigger is not detected, then the listening device **100** remains in the playback mode **102** and continues to monitor for a voice trigger. If a voice trigger is detected, then, at step **825**, the listening device **100** enters the conversation mode **105**, pauses or attenuates the audio stream, and optionally disables the noise-cancellation function.

[0056] At step **830**, the listening device **100** determines whether to enhance ambient audio or voice(s). If enhanced audio is not enabled, then, at step **840**, the listening device **100** remains in the conversation mode **105** and determines whether the playback mode **102** should be resumed. If the playback mode **102** is to be resumed, then the method **800** returns to step **810**, where the playback mode **102** is initiated.

[0057] If enhanced audio is enabled, then, at step **835**, the listening device **100** determines whether to enhance ambient sound or voice(s) only. If only voice(s) are to be enhanced, then, at step **850**, the listening device **100** optionally identifies voice parameters associated with one or more people. Next, at step **855**, the listening device **100** filters the voice(s) from the ambient sound based on the optional voice parameters. At step **860**, the enhanced voice(s) are then reproduced for the user. At step **865**, the listening device **100** then determines whether to resume the playback mode **102**. If the playback mode **102** is to be resumed, then the method returns to step **810**, where the playback mode **102** is initiated. If the playback mode **102** is not resumed, then the method **800** returns to steps **855** and **860**, where the listening device **100** continues to filter ambient sound and reproduce voice(s) for the user.

[0058] Returning now to step **835**, if ambient sound is to be enhanced, then, at step **870**, ambient sound is acquired by the one or more microphones **140** and reproduced by the listening device **100**. Then, at step **875**, the listening device **100** determines whether to resume the playback mode **102**. If the playback mode **102** is to be resumed, then the method returns to step **810**, where the playback mode **102** is initiated. If the playback mode **102** is not resumed, then the method **800** returns to step **870**, where the listening device **100** continues to reproduce ambient sound for the user.

[0059] FIG. **9** is a block diagram illustrating a computing device **120** that may be included within the listening device **100** of FIG. **1**, according to various embodiments of the present invention. As shown, computing device **120** includes a processing unit **902**, input/output (I/O) devices **904**, and a memory unit **910**. Memory unit **910** includes an application **912** configured to interact with a database **914**.

[0060] Processing unit **902** may include a central processing unit (CPU), digital signal processing unit (DSP), and so forth. I/O devices **904** may include input devices, output devices, and devices capable of both receiving input and providing output. Memory unit **910** may store a circular buffer and may include a memory module or collection of memory modules. Software application **912** within memory unit **910** may be executed by processing unit **902** to implement the overall functionality of computing device **120**, and, thus, to coordinate the operation of the listening device **100** as a whole. The database **914** may store voice triggers and voice parameters, such as frequency ranges and voice signatures.

[0061] Computing device **120** may be coupled to a sensor array that includes one or more sensors, such as one or more microphones **140** or visual sensors **150**. The sensor array is configured to measure various properties of the environment within which user resides, as well as various properties associated with user (e.g., orientation). The sensor array may include any number of microphones **140**, video cameras, touch sensors, heat sensors, light sensors, electrical field detectors, compasses, gyroscopes, radio transceivers, global positioning system (GPS) receivers, or any other type of sensor. Generally, the sensor array captures sensory data associated with the environment and sensory data associated with user, and provides that data to computing device **120**.

[0062] Computing device **120** may also be coupled to audio output devices associated with the listening device **100** that include one or more devices, such as the speakers **130** shown in FIG. **1**, configured to generate acoustic output (e.g., audio streams, ambient sound, voice(s), etc.) to the user. The audio output devices may include any number of speakers, headphones, in-ear audio devices, or any other type of device capable of generating sound.

[0063] Computing device **120** as a whole may be a microprocessor, an application-specific integrated circuit (ASIC), a system-on-a-chip (SoC), a mobile computing device such as a tablet computer or cell phone, a media player, and so forth. Generally, computing device **120** is configured to coordinate the overall operation of the listening device **100**. Any technically feasible system configured to implement the functionality of the listening device **100** falls within the scope of the present invention.

[0064] In sum, the listening device detects a voice trigger associated with the name of the user of the listening device. In response, the listening device causes an audio stream being reproduced by the listening device to be paused or attenuated. The listening device then records and reproduces ambient sound for the user so that the user can hear and interact with his or her surroundings without removing the listening device. Optionally, the listening device may process the ambient sound to enhance the voices of one or more people and/or attenuate other noises or voices around the user. Further, the listening device may determine the direction from which the voice trigger was received and enhance ambient sound received from that direction. Once the user is finished conversing, the listening device may resume the audio stream.

[0065] One advantage of the techniques described herein is that the user of a listening device can listen to an audio stream without isolating himself or herself from others. Additionally, the user is able to hear when his or her name is called and

converse with others without removing the listening device and without manually pausing or attenuating the audio stream. Further, the disclosed technique enables the user to indicate to others that he or she does not want to be disturbed.

[0066] One embodiment of the invention may be implemented as a program product for use with a computer system. The program(s) of the program product define functions of the embodiments (including the methods described herein) and can be contained on a variety of computer-readable storage media. Illustrative computer-readable storage media include, but are not limited to: (i) non-writable storage media (e.g., read-only memory devices within a computer such as compact disc read only memory (CD-ROM) disks readable by a CD-ROM drive, flash memory, read only memory (ROM) chips or any type of solid-state non-volatile semiconductor memory) on which information is permanently stored; and (ii) writable storage media (e.g., floppy disks within a diskette drive or hard-disk drive or any type of solid-state random-access semiconductor memory) on which alterable information is stored.

[0067] The invention has been described above with reference to specific embodiments. Persons of ordinary skill in the art, however, will understand that various modifications and changes may be made thereto without departing from the broader spirit and scope of the invention as set forth in the appended claims. For example, although many of the descriptions herein refer to a voice trigger, persons skilled in the art will appreciate that the systems and techniques described herein are applicable to pausing an audio stream and/or reproducing ambient sound in response to any other type of auditory trigger. The foregoing description and drawings are, accordingly, to be regarded in an illustrative rather than a restrictive sense.

[0068] Therefore, the scope of embodiments of the present invention is set forth in the claims that follow.

What is claimed is:

1. A computer-implemented method for providing audio enhancement to a user of a listening device, the method comprising:

reproducing a first audio stream;

detecting a voice trigger associated with a name of a user of the listening device; and

in response to detecting the voice trigger:

pausing or attenuating the first audio stream; and

reproducing a second audio stream associated with ambient sound.

2. The method of claim **1**, wherein generating the second audio stream comprises processing the ambient sound to enhance a first voice associated with the voice trigger.

3. The method of claim **2**, wherein processing the ambient sound comprises filtering the ambient sound based on a frequency range associated with the first voice.

4. The method of claim **2**, wherein processing the ambient sound comprises filtering the ambient sound based on one or more digital voice parameters associated with the first voice.

5. The method of claim **2**, wherein processing the ambient sound comprises filtering the ambient sound to attenuate a second voice.

6. The method of claim **1**, further comprising detecting a first direction relative to the user from which the voice trigger was received, and wherein generating the second audio stream comprises processing the ambient sound to enhance sound received from the first direction.

7. The method of claim **6**, further comprising:

detecting a location of an interlocutor from which the voice trigger was received;

detecting a change to the location of the interlocutor relative to the user; and

in response, determining a second direction relative to the orientation of the user, and wherein generating the second audio stream comprises processing the ambient sound to enhance sound received from the second direction.

8. The method of claim **1**, further comprising temporally compressing sound that was recorded prior to detecting the voice trigger to generate temporally compressed sound, and wherein the second audio stream comprises the temporally compressed sound.

9. The method of claim **1**, further comprising, in response to detecting the voice trigger, disabling a noise-cancellation function associated with the listening device.

10. A listening device, comprising:

a speaker;

a processing unit configured to:

detect a voice trigger; and

in response to detecting the voice trigger:

cause a first audio stream to be paused or attenuated; and

cause a second audio stream associated with ambient sound to be reproduced by the speaker.

11. The listening device of claim **10**, further comprising one or more microphones configured to acquire the ambient sound, and wherein the listening device comprises headphones and the one or more microphones are electrically coupled to the headphones.

12. The listening device of claim **10**, wherein the processing unit is further configured to generate the second audio stream by processing the ambient sound to enhance a first voice associated with the voice trigger.

13. The listening device of claim **12**, wherein the processing unit is configured to process the ambient sound by filtering the ambient sound based on at least one of a frequency range associated with the first voice and one or more digital voice parameters associated with the first voice.

14. The listening device of claim **12**, wherein the processing unit is configured to process the ambient sound by filtering the ambient sound to attenuate a second voice.

15. The listening device of claim **10**, further comprising an indicator, and wherein the processing unit is further configured to:

determine that a user of the listening device has selected a do-not-disturb mode; and

cause the indicator to generate a do-not-disturb indicator.

16. The listening device of claim **11**, wherein the one or more microphones comprise at least two microphones, and the processing unit is further configured to:

detect a first direction relative to a user of the listening device from which the voice trigger was received based on the ambient sound; and

generate the second audio stream by processing the ambient sound to enhance sound received from the first direction.

17. The listening device of claim **16**, wherein the processing unit is further configured to:

detect a location of an interlocutor from which the voice trigger was received;

detect a change to the location of the interlocutor relative to the user;

in response, determine a second direction relative to the orientation of the user; and

generate the second audio stream by processing the ambient sound to enhance sound received from the second direction.

18. The listening device of claim **10**, wherein the processing unit is further configured to temporally compress sound that was recorded prior to detecting the voice trigger to generate temporally compressed sound, and wherein the second audio stream comprises the temporally compressed sound.

19. The listening device of claim **10**, wherein the processing unit is further configured to cause a noise-cancellation function associated with the listening device to be disabled in response to detecting the voice trigger.

20. A non-transitory computer-readable storage medium including instructions that, when executed by a processing unit, cause the processing unit to provide audio enhancement to a user of a listening device, by performing the steps of:

causing a first audio stream to be reproduced;

detecting a voice trigger; and

in response to detecting the voice trigger:

causing the first audio stream to be paused or attenuated; and

causing a second audio stream associated with ambient sound to be reproduced.

* * * * *