US 20070127734A1

(19) United States

(12) Patent Application Publication

Brulle-Drews

(10) Pub. No.: US 2007/0127734 A1

(43) Pub. Date: Jun. 7, 2007

(54) CONFIGURABLE INFORMATION DISTRIBUTION SYSTEM FOR A VEHICLE

(76) Inventor: **Christian Brulle-Drews**, Hamburg (DE)

Correspondence Address:
BRINKS HOFER GILSON & LIONE
P.O. BOX 10395
CHICAGO, IL 60610 (US)

(21) Appl. No.: **11/456,761**

(22) Filed: **Jul. 11, 2006**

Related U.S. Application Data

(63) Continuation-in-part of application No. 11/322,371, filed on Dec. 29, 2005, now abandoned, which is a continuation of application No. PCT/EP04/07113, filed on Jun. 30, 2004.

(30) **Foreign Application Priority Data**

Jun. 30, 2003 (EP) ..... EP 03014856.3

Publication Classification

(51) **Int. Cl.**
H04B 1/00 (2006.01)

(52) **U.S. Cl.** **381/86**

(57) **ABSTRACT**

An information distribution system enhances a vehicle audio/video system. The system flexibly delivers audio and video, potentially obtained from many different sources, to different locations in the vehicle. Each passenger receives the audio or video that is of interest to them without distracting interruptions.

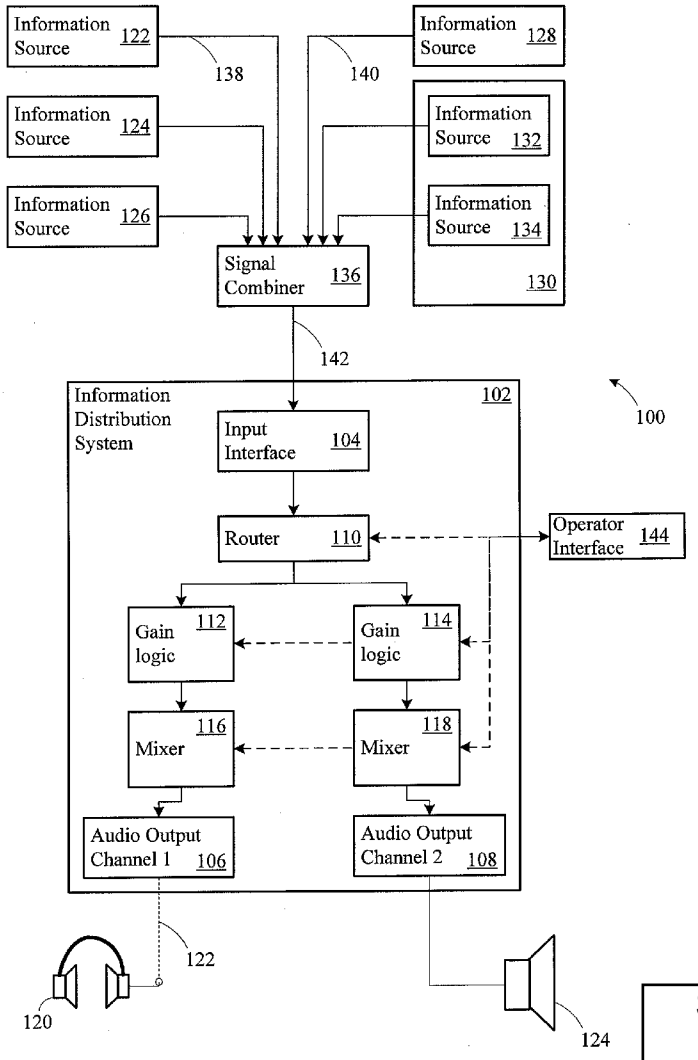

Samsung v. Zophonos
IPR2026-00085
Exhibit 1007

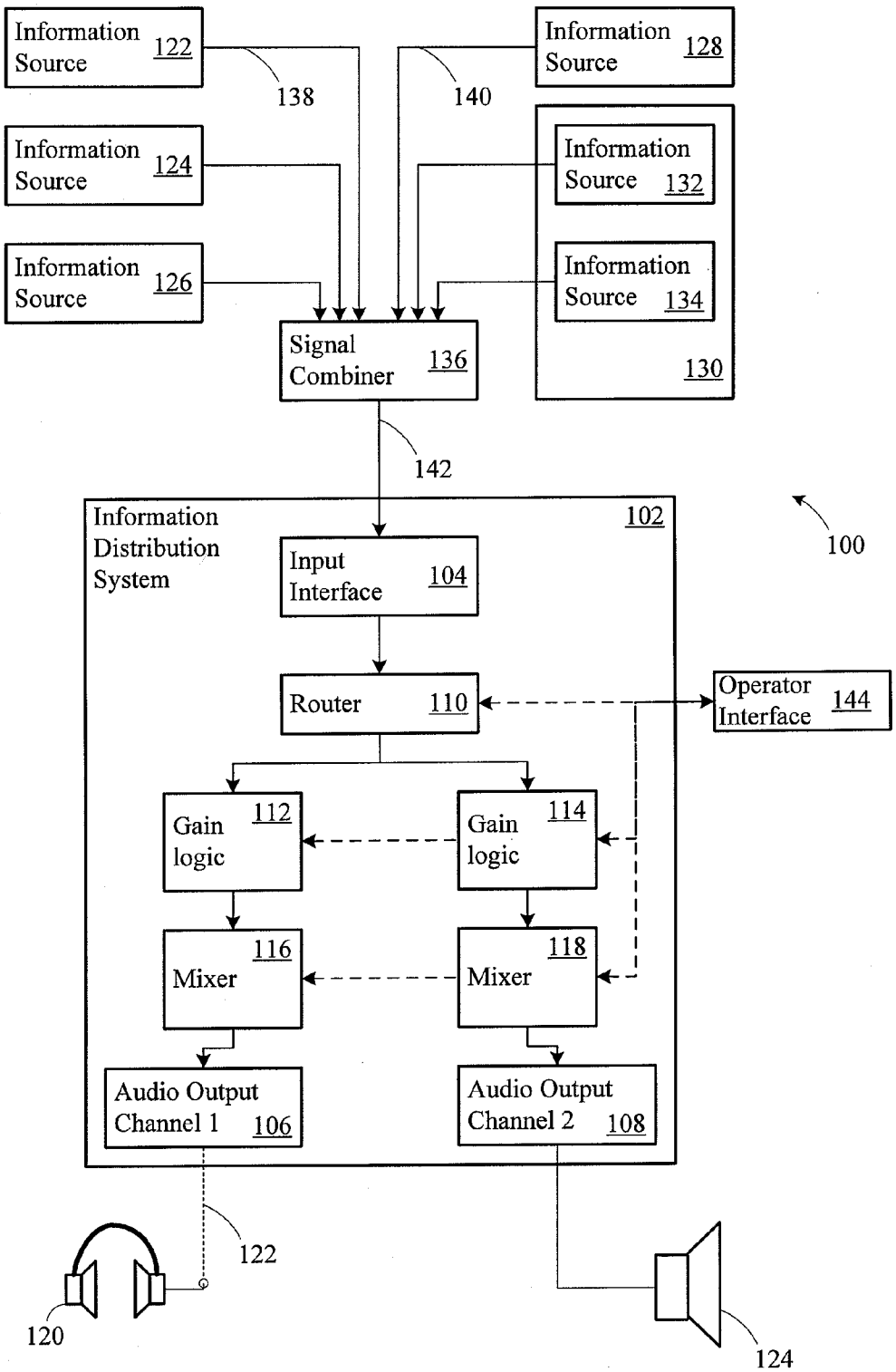
Information Source 122
Information Source 124
Information Source 126
Information Source 128
Information Source 132
Information Source 134
130
138
140
Signal Combiner 136
142
Information Distribution System
102
Input Interface 104
Router 110
Operator Interface 144
100
Gain logic 112
Gain logic 114
Mixer 116
Mixer 118
Audio Output Channel 1 106
Audio Output Channel 2 108
122
120
124

Figure 1

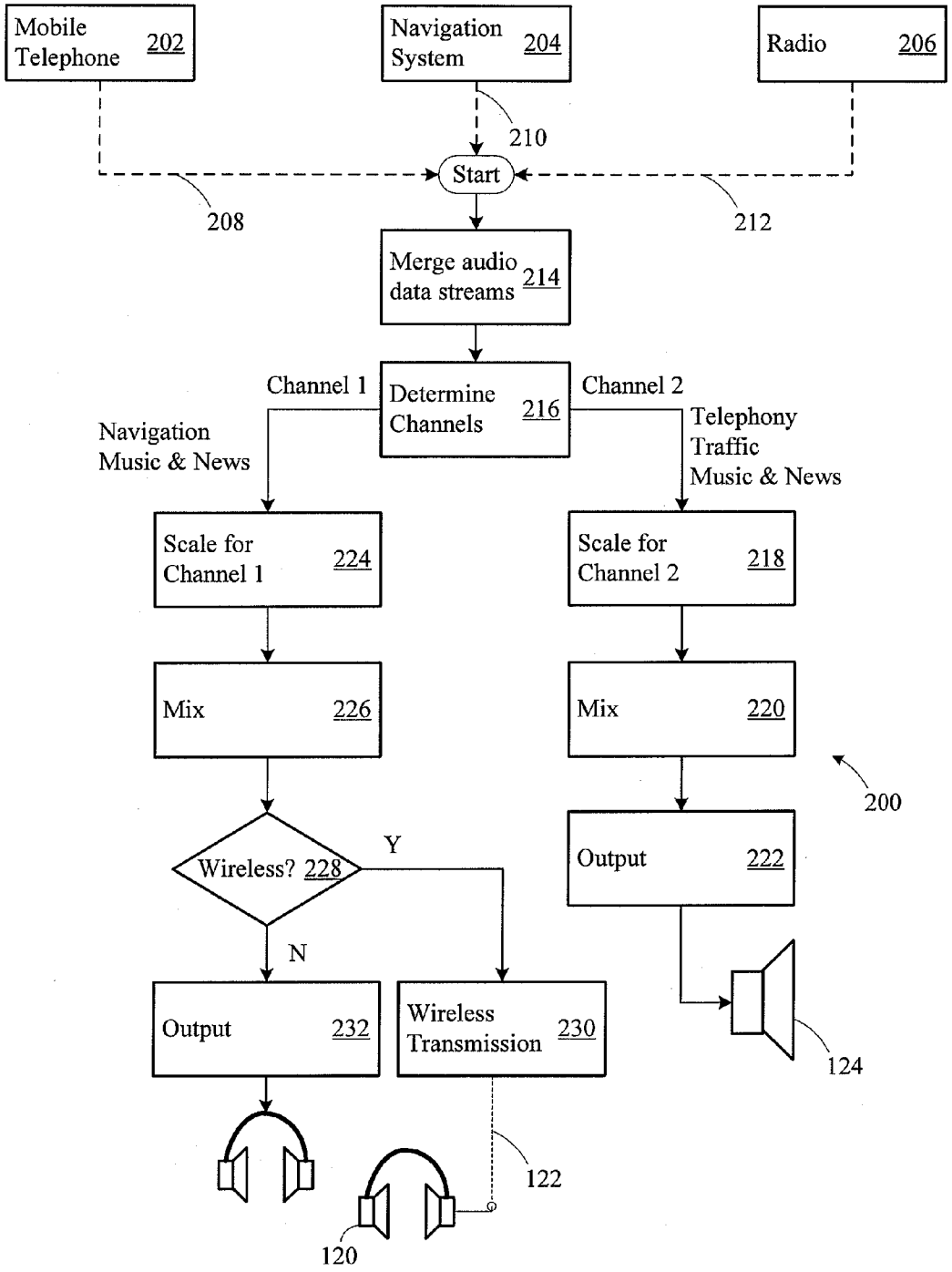
Mobile Telephone 202
Navigation System 204
Radio 206
210
Start
208
212
Merge audio data streams 214
Channel 1
Determine Channels 216
Channel 2
Navigation Music & News
Telephony Traffic Music & News
Scale for Channel 1 224
Scale for Channel 2 218
Mix 226
Mix 220
200
Wireless? 228
Y
Output 222
N
Output 232
Wireless Transmission 230
124
122
120

Figure 2

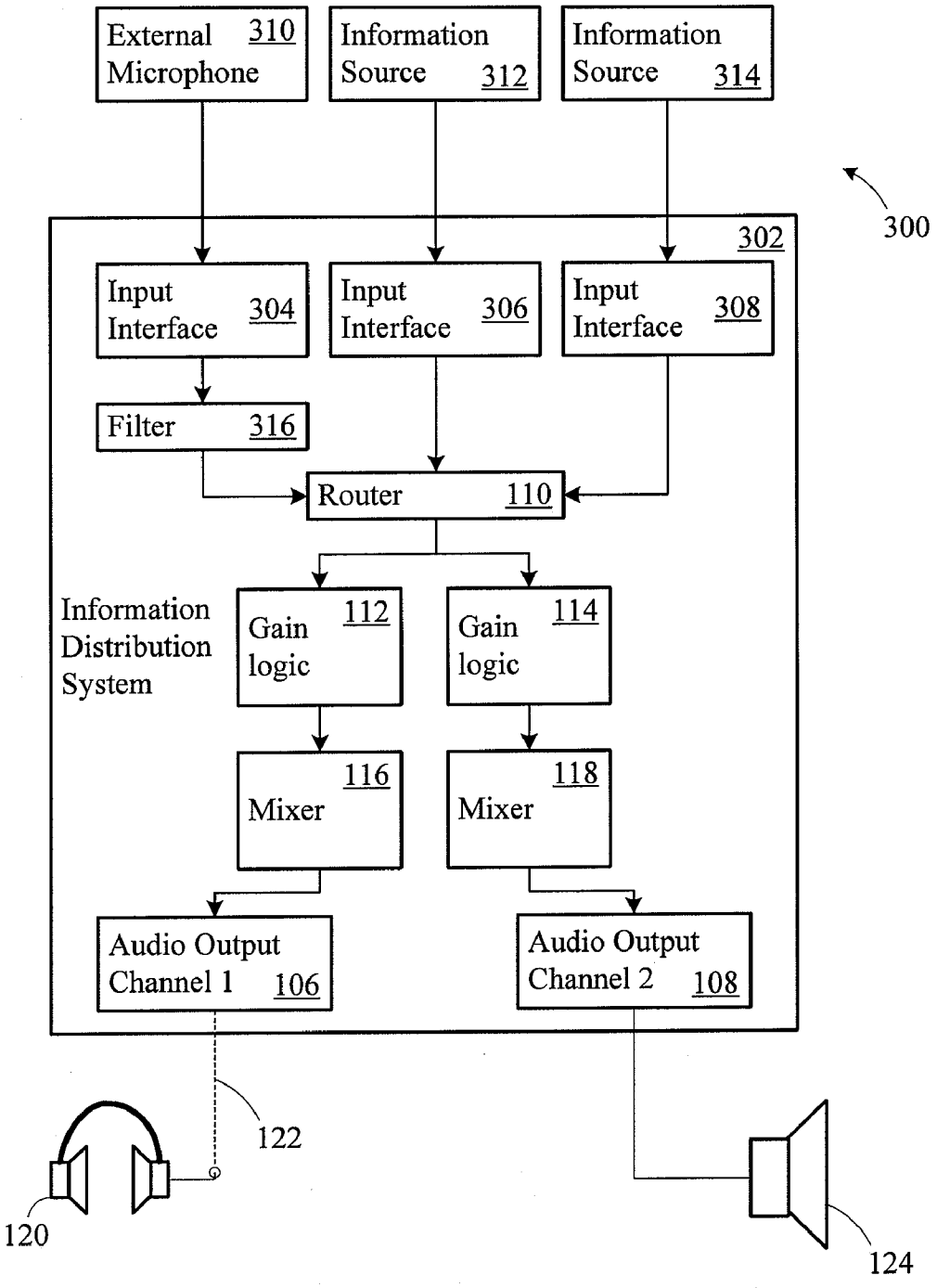
External Microphone 310
Information Source 312
Information Source 314
300
302
Input Interface 304
Input Interface 306
Input Interface 308
Filter 316
Router 110
Information Distribution System
Gain logic 112
Gain logic 114
Mixer 116
Mixer 118
Audio Output Channel 1 106
Audio Output Channel 2 108
122
120
124

Figure 3

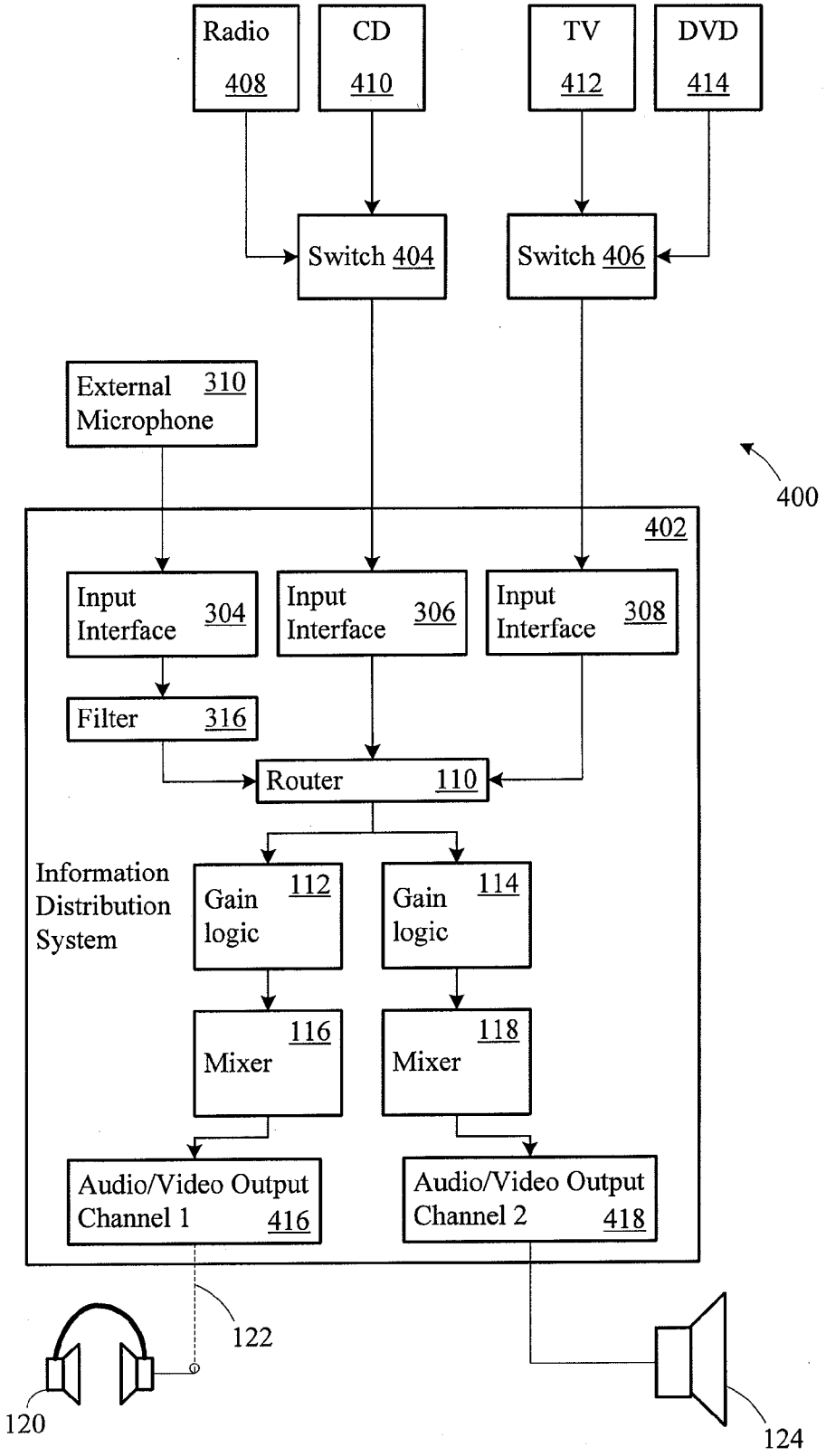
Radio
408
CD
410
TV
412
DVD
414
Switch 404
Switch 406
External Microphone
310
400
402
Input Interface
304
Input Interface
306
Input Interface
308
Filter
316
Router
110
Information Distribution System
Gain logic
112
Gain logic
114
Mixer
116
Mixer
118
Audio/Video Output Channel 1
416
Audio/Video Output Channel 2
418
122
120
124

Figure 4

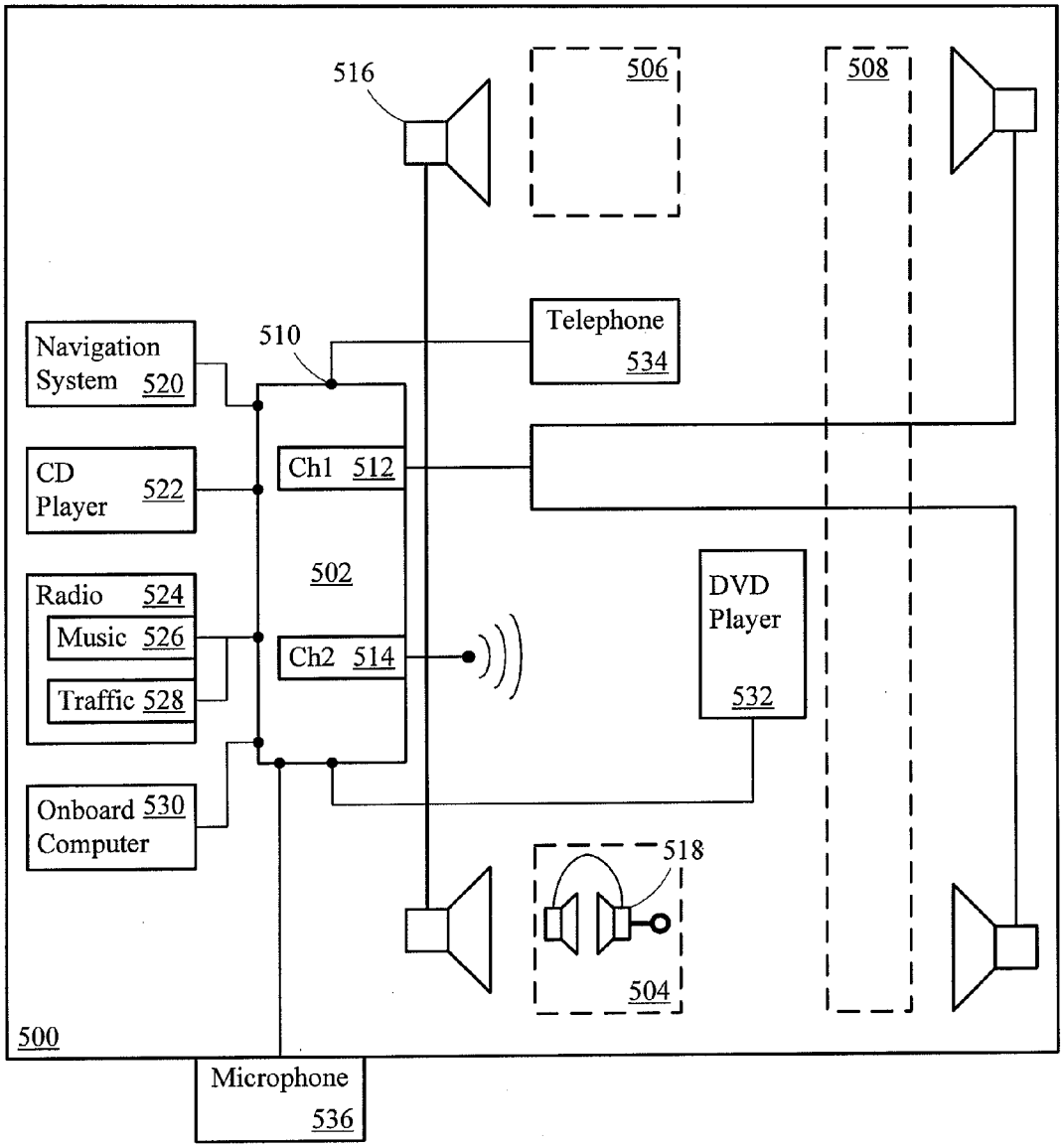
516
506
508
Telephone
534
510
Navigation
System 520
CD
Player 522
Ch1 512
502
Radio 524
Music 526
Traffic 528
Ch2 514
DVD
Player
532
Onboard 530
Computer
518
504
500
Microphone
536

Figure 5

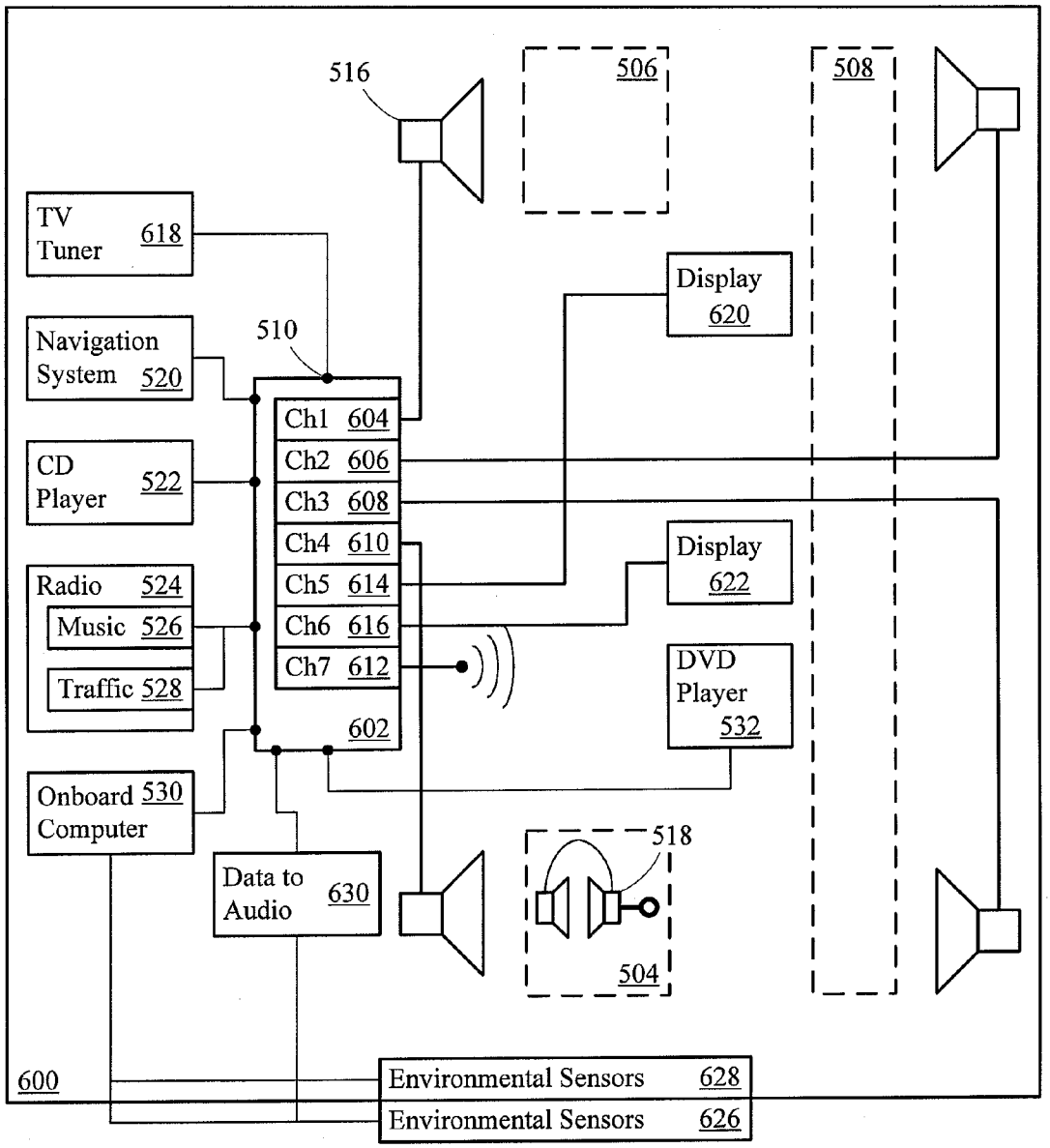
516
506
508
TV Tuner 618
Display 620
Navigation System 520
510
Ch1 604
Ch2 606
Ch3 608
Ch4 610
Ch5 614
Ch6 616
Ch7 612
CD Player 522
Radio 524
Music 526
Traffic 528
Display 622
DVD Player 532
602
Onboard Computer 530
518
Data to Audio 630
504
600
Environmental Sensors 628
Environmental Sensors 626

Figure 6

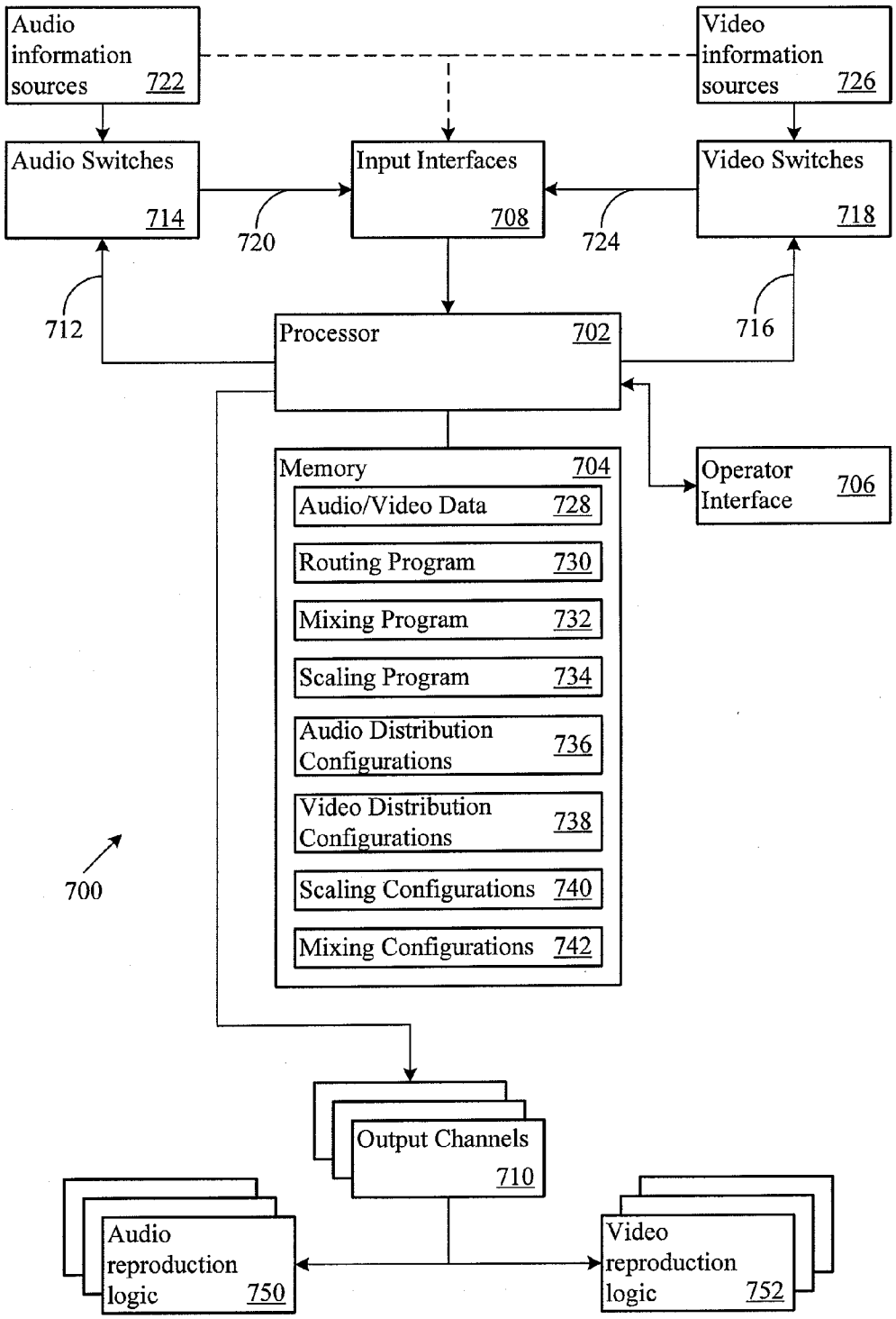
Audio information sources 722
Video information sources 726
Audio Switches 714
Input Interfaces 708
Video Switches 718
720
724
712
716
Processor 702
Memory 704
Audio/Video Data 728
Routing Program 730
Mixing Program 732
Scaling Program 734
Audio Distribution Configurations 736
Video Distribution Configurations 738
Scaling Configurations 740
Mixing Configurations 742
Operator Interface 706
700
Output Channels 710
Audio reproduction logic 750
Video reproduction logic 752

Figure 7

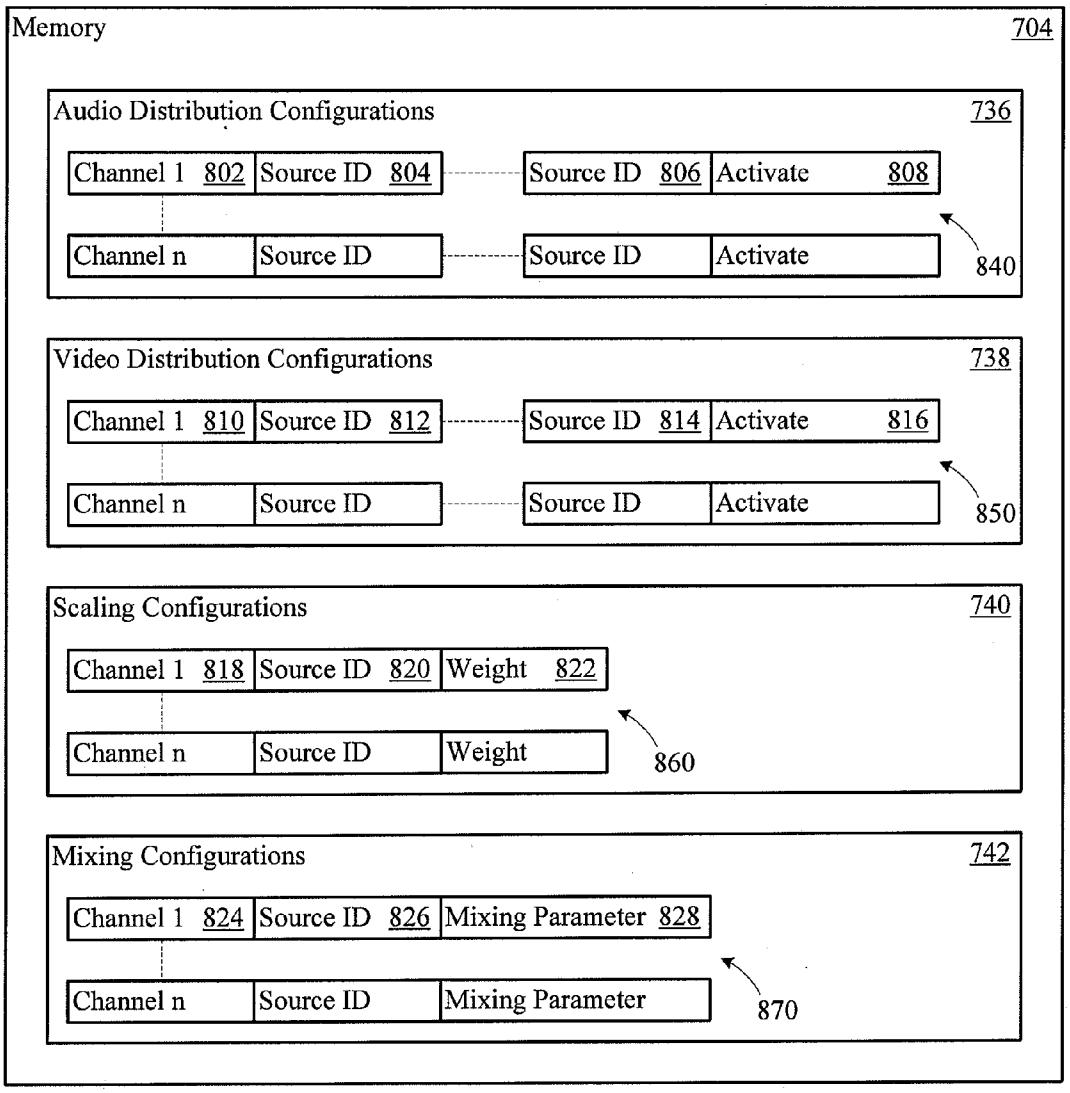
Memory
704
Audio Distribution Configurations
736
Channel 1 802
Source ID 804
Source ID 806
Activate 808
Channel n
Source ID
Source ID
Activate
840
Video Distribution Configurations
738
Channel 1 810
Source ID 812
Source ID 814
Activate 816
Channel n
Source ID
Source ID
Activate
850
Scaling Configurations
740
Channel 1 818
Source ID 820
Weight 822
Channel n
Source ID
Weight
860
Mixing Configurations
742
Channel 1 824
Source ID 826
Mixing Parameter 828
Channel n
Source ID
Mixing Parameter
870

Figure 8

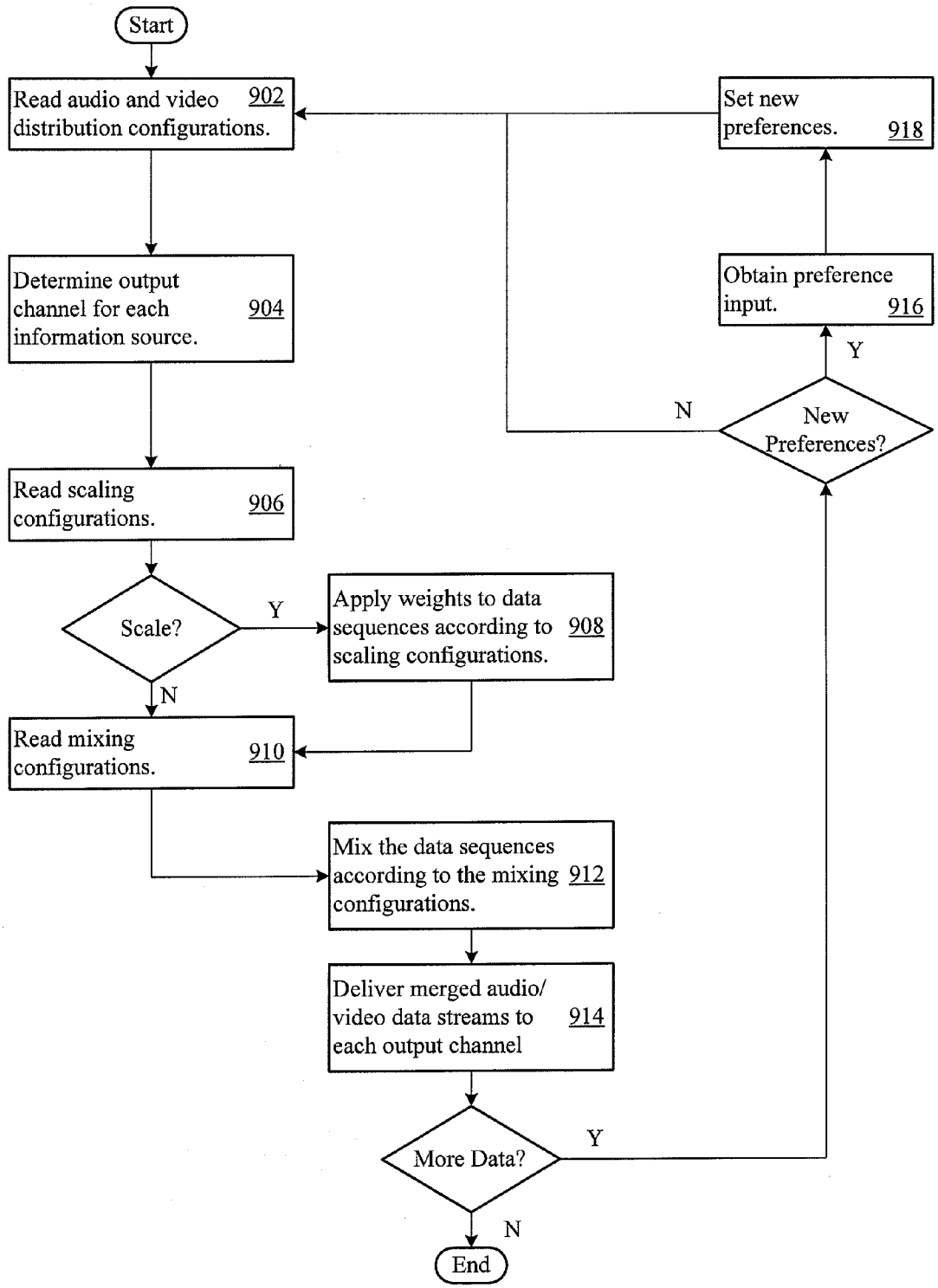
Start
Read audio and video distribution configurations. 902
Determine output channel for each information source. 904
Read scaling configurations. 906
Scale?
Y
N
Apply weights to data sequences according to scaling configurations. 908
Read mixing configurations. 910
Mix the data sequences according to the mixing configurations. 912
Deliver merged audio/ video data streams to each output channel 914
More Data?
Y
N
End
Set new preferences. 918
Obtain preference input. 916
Y
N
New Preferences?

Figure 9

CONFIGURABLE INFORMATION DISTRIBUTION SYSTEM FOR A VEHICLE

PRIORITY CLAIM

[0001] This application is a continuation-in-part application of U.S. patent application Ser. No. 11/322,371, filed Dec. 29, 2005, which is a continuation of International Application No. PCT/EP2004/007113 filed Jun. 30, 2004, which claims priority to European Patent Application No. 03014856.3, filed Jun. 30, 2003, all of which are entirely incorporated by reference herein.

BACKGROUND OF THE INVENTION

[0002] 1. Technical Field.

[0003] The invention relates to information distribution in a vehicle. In particular, this invention relates to a configurable information distribution system that distributes audio and video information among multiple outputs.

[0004] 2. Related Art.

[0005] Rapid advancements in technology have lead to the widespread adoption of extensive audio, video, communication, and information systems in vehicles. The systems provide information both acoustically and visually. The systems fill a wide range of roles, including navigation assistance, traffic reporting, wireless telephony, vehicle status reporting, music playback, video playback, and video gaming.

[0006] The systems output information to the displays and speakers that the vehicle provides for the use and enjoyment of the passengers. At times, information from different audio sources is output simultaneously. For example, a navigation system announcement may be made while audio signals accompanying DVD playback play through rear speakers for the occupants of the back seat. In the past, the amplitude of the audio signals was lowered with respect to the amplitude of the audio signal from the navigation system, or the audio signals were completely faded out, so that the driver could hear the navigation system announcement.

[0007] Indiscriminately fading the audio signal adversely impacts the use and enjoyment of vehicle's audio/visual system. The passengers listening to and watching the DVD playback are generally not interested in the announcements of the navigation system. Nevertheless, the passengers have their attention diverted to the navigation announcements and away from the DVD playback.

SUMMARY

[0008] The information distribution system enhances the use and enjoyment of the vehicle audio/visual system. The system flexibly delivers audio and video to vehicle passengers based on passenger preferences. Accordingly, each passenger receives the audio or video they desire tailored to their preferences without distracting interruptions. The system accepts audio or video from multiple sources and selectively mixes and routes the audio and video to multiple destinations such as front and rear vehicle speakers or multiple displays.

[0009] The information distribution system includes an input interface and output channels that connect to audio/video output devices distributed around the vehicle. The input interface receives audio data from multiple sources, such as a DVD player, radio, or navigation system. The system flexibly distributes the audio and video among the output channels.

[0010] To that end, the system stores configurable preference settings. The preference settings may specify audio/video distribution preferences that establish, for any combination of output channels and information sources, which data to deliver to which output channel. Furthermore, the system stores scaling preferences and mixing preferences for the audio/video data and a mixer combines the audio/video data, scaled according to the scaling preferences, obtained from the information sources into a mixed output. A router in the system distributes the mixed output and among the output interfaces according to the distribution preferences.

[0011] Other systems, methods, features and advantages of the invention will be, or will become, apparent to one with skill in the art upon examination of the following figures and detailed description. It is intended that all such additional systems, methods, features and advantages be included within this description, be within the scope of the invention, and be protected by the following claims.

BRIEF DESCRIPTION OF THE DRAWINGS

[0012] The invention may be better understood with reference to the following drawings and description. The components in the figures are not necessarily to scale, emphasis instead being placed upon illustrating the principles of the invention. Moreover, in the figures, like referenced numerals designate corresponding parts throughout the different views.

[0013] FIG. **1** shows a configurable information distribution system.

[0014] FIG. **2** shows a flow diagram illustrating the acts that a configurable information distribution system may take to selectively route information to vehicle passengers.

[0015] FIG. **3** shows a configurable information distribution system.

[0016] FIG. **4** shows a configurable information distribution system with input switching.

[0017] FIG. **5** shows a configurable information distribution system in a vehicle.

[0018] FIG. **6** shows a configurable information distribution system in a vehicle.

[0019] FIG. **7** shows a configurable information distribution system.

[0020] FIG. **8** shows configurable preference settings for a configurable information distribution system.

[0021] FIG. **9** shows the acts that the configurable information distribution system may take to selectively route information to vehicle passengers.

DETAILED DESCRIPTION OF THE PREFERRED EMBODIMENTS

[0022] FIG. **1** shows a vehicle audio/visual system **100** that includes a configurable information distribution system ("system") **102**. The system **102** includes an input interface

104, audio output channels **106** and **108**, and a router **110**. The system **102** also includes gain logic **112** and **114** and mixers **116** and **118**.

[**0023**] A headset **120** connects to the audio output channel **106** through a wireless connection **122**. A speaker system **124** connects to the audio output channel **108**. The speaker system **124** may be implemented as one or more speakers distributed throughout the vehicle.

[**0024**] FIG. **1** also shows information sources **122**, **124**, **126**, **128**, **130**, **132**, and **134**. Any information source **122-134** may provide one or more audio or video data streams. The information source **130**, for example, includes two information sources **132** and **134** that provide individual audio/video data streams. The information source **130** may be a radio in which the information source **132** generates audio data for music and news programs, while the information source **134** generates audio data for traffic information. The information sources **132** and **134** may be independent radio tuners, tuners that decode and separate AM/FM radio signals and an accompanying Radio Data Service (RDS) signal or Subsidiary Communications Authority (SCA) signal, or other types of logic.

[**0025**] The information sources **122-134** may include a television receiver, a radio receiver, a compact cassette (CC) player, a compact disk (CD) player, a super audio compact disk (SACD) player, a digital versatile disk (DVD) player, or other information source. Other examples of information sources **122-134** include a personal computer, a video game console, a telephone (whether mobile or fixed), a navigation system, an onboard computer, or a microphone. The number of information sources **122-134** may vary depending on the implementation.

[**0026**] The system **102** connects to a signal combiner **136**. The signal combiner **136** merges the audio/visual data streams (e.g., the audio streams **138** and **140**). The signal combiner **136** may be a time or frequency multiplexer or other time and/or frequency combining logic. The signal combiner **136** forms a combined data stream **142**. The combined data stream **142** enters the system **102** through the input interface **104**.

[**0027**] FIG. **2** shows a flow diagram **200** illustrating how the information distribution system **102** selectively routes information to vehicle passengers. FIG. **2** shows three information sources: a mobile telephone **202**, a navigation system **204**, and a radio **206**. The mobile telephone **202**, navigation system **204**, and radio **206** provide different audio data streams: a telephony data stream **208**, a navigation data stream **212**, and a radio data stream **212**, respectively, to the system **102**.

[**0028**] The signal combiner **136** merges the data streams **208-212** (Act **214**), for example by time multiplexing data from each of the data streams **208-212** into a combined data stream. The combined data stream thereby includes data sequences of audio information obtained from the mobile telephone **202**, navigation system **204**, and radio **206**. During merging, the signal combiner **136** may add predefined source identifiers, headers, or other distinguishing information to the merged data stream. The distinguishing information may be stored in a memory for retrieval and insertion into the merged data stream by the signal combiner **136**. The identifiers may specify the origin (e.g., the mobile telephone **202**) of each data sequence, the length of the data sequence, or any other characteristic of the data sequence. The combined data stream enters the system **102** through the input interface **104**.

[**0029**] The system **102** determines which data sequences in the combined data stream to deliver to which output channels (Act **216**). In the example shown in FIG. **2**, the system **102** directs the navigation data stream **210** to the first audio output channel **106**, and to the headset **120** connected to the first audio output channel **106**. Furthermore, the system **102** directs the telephony data stream **208** and the traffic information in the radio data stream **212** to the second audio output channel **108**. The system **102** directs the music and news programs in the radio data stream **212** to both the first audio output channel **106** and the second audio output channel **108**.

[**0030**] The router **110** may deliver any portion of the input data streams to any of the output channels. The system **102** may store configurable distribution preferences that specify which data streams (e.g., the radio data stream), and what types of data in the data stream (e.g., news or music) are destined for which output channels. The system **102** may store the configurable distribution preferences in a memory, such as in a routing table in the router **110**. The system **102** may accept input from vehicle passengers through an operator interface **144** that establishes or changes the audio distribution preferences.

[**0031**] The gain logic **114** scales the data sequences destined for the second audio output channel **108** (Act **218**). The system **102** may store scaling preferences that specify the magnitude of attenuation or gain applied to the data sequences. The system **102** may accept input from vehicle passengers through a user interface that establishes or changes the scaling preferences. For example, a passenger may establish a scaling preference that reduces music volume, while keeping telephone volume constant. The scaling preferences may specify that a particular audio type and/or audio source will be completely faded out, or may specify that no change will be made to a particular audio type and/or audio source.

[**0032**] The mixer **118** mixes the scaled data sequences (Act **220**) to produce a mixed audio output that includes the telephony information, the traffic information, and the music and news. The telephony information, the traffic information, and the music and news are weighted according to the scaling preferences to tailor the audio output to the passenger preferences, to meet default system preferences, or to meet any other preferences established in the system **102**. The system **102** outputs the mixed audio output to the speaker system **124** (Act **222**) through the second audio output channel **108**.

[**0033**] The gain logic **112** scales the data sequences destined for the first audio output channel **106** (Act **224**). The mixer **116** mixes the scaled data sequences (Act **226**) to generate a mixed audio output for the first output channel **106**. The gain logic **112** may also operate responsive to scaling preferences, default preferences, or other settings.

[**0034**] The system **102** determines whether the mixed audio output may be delivered wirelessly (Act **228**), for example by reading system configuration data or operator preference data. Alternatively or additionally, the system

102 may automatically detect and communicate with wireless devices that adhere to an established communication protocol, such as the Bluetooth protocol. When wireless transmission is available, the system **102** initiates wireless transmission of the mixed audio output (Act **230**). The system **102** may also output the mixed audio output through the first output channel **106** to a device that is not wirelessly connected to the first output channel **106** (Act **232**).

[**0035**] The system **102** may transmit to wireless headphones, hearing aids with a telecoil, or to other wireless devices. For example, a passenger may provide input to the system **102** that specifies that the passenger wears a wireless receiver (e.g., a telecoil equipped hearing aid). The system **102** may check the system input, determine that the passenger has selected wireless transmission to the hearing aid, and wirelessly transmit to the passenger. In doing so, the system **102** may convert the mixed audio output into magnetic field variations to induce a signal in the conductive wire loops in the telecoil. One advantage is that background noise is significantly suppressed because the telecoil responds the magnetic field variations and not to sound vibrations. Thus, the passenger can better understand the information in the combined output.

[**0036**] FIG. **3** shows a vehicle audio/visual system **300** that includes a configurable information distribution system ("system") **302**. The system **302** includes an input interface **304**, **306**, and **308** for each information source **310**, **312**, and **314**. Thus, three data streams enter the system **302** in parallel. Furthermore, the system **302** includes a filter **316** connected to the input interface **304**. Additional filters may be provided for the other input interfaces **306** and **308**. Alternatively, the filter **316** may filer the data streams received on the input interfaces **306** and **308**. The filter **316** may be a noise filter, an echo cancellation filter, or any other type of filter.

[**0037**] In one implementation, the information source **310** includes an external environmental sensor, such as an external microphone. The microphone may capture sound outside of the vehicle, including noise of interest (e.g., signal horns or emergency sirens), but also noise that is not of interest (e.g., motor noise or road noise). The system **302** may configure the filter **316** to attenuate, suppress, or remove the noise that is not of interest. As a result, the passenger may receive noise that is of interest from outside the car, thereby informing the passenger of important environmental conditions (e.g., a passing ambulance).

[**0038**] FIG. **4** shows a vehicle audio/visual system **400** that includes a configurable information distribution system ("system") **402** with input switching. In particular, the system **402** includes switches such as the audio input switch **404** and video input switch **406**. The switches **404** and **406** may be manually actuated switches, electronic switches under control of the system **402** or other vehicle system, or other types of data selectors. The audio input switch **404** provides a selection between any number of audio information sources. The information sources may include the radio **408** and super audio CD player **410** shown in FIG. **4**, a compact cassette player, or any other audio information source.

[**0039**] The video switch **406** provides a selection between any number of video information sources. The information sources may include a TV **412**, a DVD player **414**, or any other source of a video data stream. A passenger may determine which of the video information sources to view by manually controlling the video input switch **406**, by setting passenger viewing preferences, by providing video selection input through an operator interface in the vehicle, or in another manner.

[**0040**] The system **402** selectively routes the video data streams between the first audio/video output channel **416** and the second audio/video output channel **418**. The audio/video output channels **416** and **418** may include audio/video connectors, wireless transmitters, or other audio and video output logic. The system **402** may establish and maintain video distribution preferences and video mixing preferences. The video distribution preferences may specify one or more output channels to which to route any particular input video data stream. For example, a passenger viewing a front seat LCD display connected to the first audio/video output channel **416** may view the DVD video data stream, while a passenger viewing a rear seat LCD display connected to the second audio/video output channel **418** may receive a combined TV and DVD video stream. The video mixing preferences may establish, for any output channel, how the system **402** will merge the video data streams. The video mixing preferences may establish that the video data streams should be merged into a split-screen display or a picture-in-picture display, and may specify the dimensions, position, or other characteristic of the picture-in-picture display, video brightness or contrast, or any other video mixing characteristic.

[**0041**] FIG. **5** shows a vehicle **500** including a configurable information distribution system ("system") **502**. The system **502** centrally gathers and distributes audio information to different locations in the vehicle. Schematically drawn in dotted lines are the driver's seat **504**, the front passenger seat **506** and the back seat **508**. In the example shown in FIG. **5**, the system **502** includes seven input interfaces (e.g., the telephone input interface **510**), a first audio output channel **512** and a second audio output channel **514**. The first audio output channel **512** connects to the speakers **516** and the second audio output channel **514** wirelessly communicates with the headset **518**.

[**0042**] A navigation system **520** connects to one of the input interfaces. A CD player **522** is also connected a input interface. In addition, FIG. **5** shows a radio **524** connected to a third input interface. The radio **524** includes two audio data sources: the music program data source **526** and the traffic information data source **528**. Additional information sources include an onboard computer **530** and a DVD player **532** provided for the occupants of the back seat **508**.

[**0043**] In addition, FIG. **5** shows a telephone **534** connected to the system **502**. Additionally or alternatively, the passenger may connect a personal computer or any other information source to the system **502**. FIG. **5** also shows that the system **502** receives an audio data stream form an external microphone **536**. Additional, fewer, or different information sources may connect to the system **502**. Furthermore, the system **502** may determine that an information source is not allowed to provide input to the system **502** because of time / date, user preference, or other constraints. For disallowed information sources, the system **502** may refuse requests to route information from that information source to any destination. Similarly, the system **502** may

implement additional, fewer, or different output channels (e.g., an output channel for independent control over each speaker **516**).

[**0044**] In another implementation, the system **502** accepts input from more than one external microphone in order to enhance reception of noise of interest outside the vehicle. Additionally or alternatively, the system **502** may accept input from an internal microphone. The internal microphone may be an inter-vehicle communication device that the passengers use to improve communication in the vehicle. The system **502** may also employ the internal microphone to control the amplitude of the audio signals that the system **502** distributes to the output channels **512** and **514**. For example, the system **502** may adjust the amplitude as a function of background noise level inside the car that is detected by the internal microphone. When background noise increases, the system **502** may increase the amplitude of the audio signal sent to either output channel **512** and **514**.

[**0045**] Audio distribution preferences, scaling preferences, default configuration, or other configuration information may determine which output channels receive audio data from the information sources. As an example, the system **502** may route audio data from the CD player **522**, DVD player **532**, and the music program data source **526** to the speakers **516**. Thus, the occupants of the front passenger seat **506** and/or the back seat **508** may enjoy the chosen entertainment programs without being annoyed or distracted by announcements arriving from the other information sources.

[**0046**] The driver, using the headset **518**, may receive navigation information from the navigation system **520**, traffic information from traffic information data source **528**, telephone calls via the telephone **524**, and information captured by the external microphone **536**. The configuration information may also direct the system **502** to provide audio signals from the entertainment sources such as the CD player **522**, the music program data source **526**, or the DVD player **532**.

[**0047**] The configuration of the system **502** may change at any time. For example, the system **502** may accept input from a user interface that establishes or changes any of the distribution preferences, scaling preferences, default routing or mixing preferences, or other system parameters. Accordingly, any passenger may reconfigure the system **502** so that the passenger receives selected information, mixed and delivered according to individual preferences.

[**0048**] FIG. **6** shows a vehicle **600** including a configurable information distribution system ("system") **602**. The system **602** centrally gathers and distributes audio and video information to different destinations in the vehicle. The system **602** includes seven output channels: the five audio output channels **604**, **606**, **608**, **610**, and **612**, and the two video output channels **614** and **616**. Video data streams arrive from the TV Tuner **618** and the DVD player **532**. The system **602** mixes and routes the video data streams between the displays **620** and **622**.

[**0049**] Video mixing preferences and video distribution preferences may determine how the system **602** delivers the video data streams to the displays **620** and **622**. For example, the video distribution preferences may direct the system **602** to send both the DVD video data and the TV tuner video data to the display **620** through the video output channel **614**, while sending only the DVD video data to the display **622** through the video output channel **616**. With regard to the output channel **614**, the video mixing preferences may direct the system **602** to output, for example, a mixed video data stream in which the DVD video appears in the foreground, with the TV tuner data in a picture-in-picture window.

[**0050**] FIG. **6** also shows external environmental sensors **626** and internal environmental sensors **628**. The environmental sensors **626** and **628** may be microphones, temperature sensors, humidity sensors, directional sensors, carbon monoxide sensors, acceleration sensors, wind speed or direction sensors, or any other type of sensor. The environmental sensors **626** and **628** generate sensor data (e.g., representative of the outside temperature). Data-to-audio conversion logic **630** may be provided to convert the sensor data to an audio data sequence. As examples, the data-to-audio conversion logic **630** may be a data-to-speech converter, a text-to-speech converter, a speech data system (SDS), or a data-to-tone converter. The audio data sequence may convey the sensor data in spoken form, as tones (e.g., an emergency warning tone or tone sequence), or in another audible form. Additionally or alternatively, the data-to-audio conversion logic **630** may implement a data-to-text converter for displaying information in a readable form to the passengers. The **502** routes, amplifies or attenuates, mixes, and/or outputs the audio data sequences from the data-to-audio conversion logic **630** to any selected output channel. The data-to-audio conversion logic **630** may also receive input from other information sources, such as Short Message Service (SMS) receivers that receive navigation, traffic, emergency, or other information.

[**0051**] Alternatively or additionally, the onboard computer **530** may process the sensor data. The onboard computer **530** may implement noise reduction processing, such as noise cancellation or echo cancellation processing employing the sensor data (e.g., internal and external microphone data). The onboard computer **530** may also convert the data to audible form and provide a resultant audio sensor data stream to any of the input interfaces **510**.

[**0052**] FIG. **7** shows a configurable information distribution system ("system") **700**. The system **700** includes a processor **702**, a memory **704**, and an operator interface **706**. The system also includes input interfaces **708** and output channels **710**. The input interfaces **708** and output channels **710** may include serial data bus interfaces, parallel data bus interfaces, vehicle bus interfaces, packet switched network interfaces, optical fiber interfaces, wireless transmission interfaces, analog or digital video or audio interfaces, or other types of interfaces. The processor **702** controls an audio switch control output **712** connected to the audio switches **714** and a video switch control output **716** connected to the video switches **718**.

[**0053**] The system **700** receives audio data streams **720** from the audio information sources **722**. Video data streams **724** arrive from the video information sources **726**. Any of the audio data streams **720** and video data streams **724** may connect directly to the input interfaces **708** instead of connecting through the audio switches **714** and video switches **718**.

[**0054**] The memory **704** stores audio/video data **728** received from the audio and video information sources **722**

and **726**. The routing program **730** determines the output channels **710** to which to distribute the audio and video data **728**. The mixing program **732** mixes the audio and video data **728** to form a mixed audio output and/or a mixed video output for delivery to the output channels **710**. The scaling program **734** applies gains to the audio data, and may apply brightness, contrast, or other image control over the video data **728**.

[**0055**] The programs **730-734** may operate according to default system settings, or according to configurable preference settings. The system **700** may accept operator preferences through the operator interface **706** and responsively establish preference settings. The operator interface **706** may include a voice recognition system, a keypad, a touch sensitive display, or any other interface.

[**0056**] The memory **704** stores the configurable preference settings. In the example shown in FIG. **7**, the configurable preference settings include audio distribution configurations **736**, video distribution configurations **738**, scaling configurations **740**, and mixing configurations **742**. The audio distribution configurations **736** may specify which audio information sources will be directed to which output channels **710**. The video distribution configurations **738** may specify which video information sources will be directed to which output channels **710**. The scaling configurations **740** may specify whether to attenuate or amplify any given audio information source directed to any given output channel **710**. The mixing configurations **742** may specify parameters for mixing video or audio data streams. Examples of mixing configurations for video data streams include whether to render video as a picture within another video, to split the screen horizontally for each video, or to split the screen vertically for each video delivered to the same output channel **710**.

[**0057**] The output channels **710** connect to audio reproduction logic **750** and to video reproduction logic **752**. The audio reproduction logic **750** may include speakers in the vehicle sound system or headsets, or any other audio reproduction logic. The video reproduction logic **752** may include one or more displays, such as CRT or LCD displays, heads-up displays, such as those drawn on the windshield or other surface, or any other type of video reproduction logic. Any of the audio reproduction logic **750** and the video reproduction logic **752** may include a wireless interface to one or more of the output channels **710**.

[**0058**] FIG. **8** shows the configurable preference settings **736-742** in more detail. The audio distribution configurations **736** may include one or more audio configuration entries **840**. Each entry **840** may specify a channel identifier **802**, and one or more source identifiers (e.g., the source identifiers **804** and **806**). In addition, the configuration entry may include activation data **808**.

[**0059**] The channel identifier **802** specifies one of the output channels (e.g., the audio output channel **106**). The source identifiers **804** and **806** specify the audio information sources (e.g., the information sources **122** and **132**) that the system will distribute to the audio output channel. The activation data **808** specifies the conditions under which the configuration entry applies. The activation data **808** may be a time, date, location, passenger identifier, or other specifier. For example, the activation data **808** may specify that the configuration entry applies when a certain passenger is in the car, at a certain time of day, or applies as a default.

[**0060**] The video distribution configurations **738** may include one or more video configuration entries **850**. Each entry **850** may specify a channel identifier **810**, and one or more source identifiers (e.g., the source identifiers **812** and **814**). In addition, the configuration entry may include activation data **816**. The channel identifier **810** specifies one of the output channels (e.g., the video output channel **616**). The source identifiers **812** and **814** specify the video information sources (e.g., the TV Tuner **618** and DVD player **532**) that the system will distribute to the video output channel. The activation data **816** may be provided to specify when the configuration entry applies.

[**0061**] The scaling configurations **740** may include one or more scaling configuration entries **860**. Each scaling configuration entry **860** may include a channel identifier **818**, a source identifier **820**, and a weight **822**. The weight **822** specifies how the gain logic **112** and **114** adapts the audio/video data stream that the source identifier **820** specifies for delivery to the output channel that the channel identifier **818** specifies.

[**0062**] For example, the configurable preference settings may specify that the audio output channel **106** will receive both navigation audio data and music audio data. The scaling configurations **740** may then include a scaling configuration entry that specifies that the volume level represented in the navigation data stream **210** will be amplified by **20**%, while the volume level represented in the music audio data will be attenuated by **60**%. The system thereby enhances the delivery of the navigation information without completely eliminating the music. Activation data for one or more of the scaling configuration entries **860** may also specify when the configuration entry applies.

[**0063**] The mixing configurations **742** may include one or more mixing configuration entries **870**. Each mixing configuration entry **870** may include a channel identifier **824**, a source identifier **826**, and mixing parameters **828**. The mixing parameters **828** specify how the system mixes the audio or video data **728** to obtain a combined audio or video output. For example, the mixing parameters **828** may specify that the DVD video obtained from the DVD player **532** should be mixed into the output data stream in a picture-in-picture window. The mixing parameters **828** may specify other parameters, such as window size or position. Activation data for one or more of the mixing configuration entries **870** may also specify when the configuration entry applies.

[**0064**] The scaling configurations **740** and the mixing configurations **742** are examples of information modification configurations. The systems described may implement additional, fewer, or different types of modification parameters. The modification parameters may apply to audio data, video data, sensor data, or any other type of data.

[**0065**] FIG. **9** shows the acts that the configurable information distribution system **700** may take to selectively route information to vehicle passengers. The routing program **730** reads the audio distribution configurations **736** and the video distribution configurations **738** (Act **902**). The routing program **730** examines the identifiers in the configurations **736** and **738** to determine an output channel, if any, for each information source (Act **904**).

[**0066**] The scaling program **734** reads the scaling configurations **740** (Act **906**). The scaling program **734** exam-

ines the identifiers in the scaling configurations **740** to determine which audio data streams to weight and for which output channels the weighting applies. When the scaling configurations **740** specify that a weight should be applied, the scaling program **734** applies the specified weight to the audio data streams (Act **908**).

[**0067**] In addition, the mixing program **732** reads the mixing configurations **742** (Act **910**). The mixing program **732** combines the audio/video data sequences as specified by the mixing configurations **742** (Act **912**). The routing program **730** then delivers the weighted and mixed audio/video data streams to the output channels specified in the audio distribution configurations **736** and the video distribution configurations **738** (Act **914**).

[**0068**] The system **700** also checks whether an operator has provided preference input on an operator interface **706**. When there are new preferences, the system **700** obtains the preferences (Act **916**). The system **700** updates the configurable preference settings **736-742** (Act **918**) and continues to route audio/video data to the appropriate output channels.

[**0069**] While various embodiments of the invention have been described, it will be apparent to those of ordinary skill in the art that many more embodiments and implementations are possible within the scope of the invention. For example, the video and/or audio signals may be scaled, mixed, and/or routed with digital or analog circuitry, or with a combination of analog and digital circuitry. The systems may implement additional, different, or fewer audio/video distribution, scaling, or mixing preferences. For example, the system may establish default priority levels for any information source in memory. The priority levels may specify amplification or attenuation levels for any information source (e.g., to emphasize navigation information, emergency information, or traffic reports). As another example, the systems may establish passenger priority preferences that determine which passenger has higher priority control over a radio tuner, television tuner, or other information source. Accordingly, the invention is not to be restricted except in light of the attached claims and their equivalents.

I claim:

1. An information distribution system for a vehicle, comprising:

an input interface operable to receive first audio data and second audio data; multiple audio output channels;

an audio distribution configuration;

a scaling configuration;

gain logic operable to scale the first audio data according to the scaling configuration to form scaled audio data;

a mixer operable to mix the scaled audio data and the second audio data into a mixed audio output; and

a router operable to distribute the mixed audio output and at least one of the first audio data and the second audio data among the multiple audio output channels according to the audio distribution configuration.

2. The system of claim 1, where the scaling configuration comprises a volume weighting for the first audio data.

3. The system of claim 1, where the first audio data comprises navigation audio data.

4. The system of claim 3, where the second audio data comprises music audio data.

5. The system of claim 4, where the scaling configuration comprises a volume reduction weighting for the music audio data.

6. The system of claim 1, further comprising data-to-audio conversion logic connected to the input interface, and where the data-to-audio conversion logic is operable to receive environmental sensor data.

7. The system of claim 6, where the environmental sensor data comprises temperature, speed, or road noise environmental data, or a combination thereof.

8. A method for information distribution in a vehicle, comprising:

receiving information source data streams;

reading configuration preferences;

scaling information in at least one of the information source data streams according to the configuration preferences;

mixing the information source data streams according to the configuration preferences to form a mixed data stream; and

distributing the mixed data stream among multiple output channels according to the configuration preferences.

9. The method of claim 8, where receiving comprises:

receiving a navigation audio data stream;

receiving a second audio data stream; and where scaling comprises:

increasing volume of navigation information in the navigation audio data stream with respect to the second audio data stream; and where mixing comprises:

mixing the navigation audio data stream and the second audio data stream to form the mixed data stream.

10. The method of claim 8, where reading comprises:

reading a scaling configuration comprising a weight; and where scaling comprises:

scaling information in at least one of the information source data streams according to the weight.

11. The method of claim 8, where reading comprises:

reading an audio distribution configuration comprising a channel identifier; and where distributing comprises:

distributing the mixed data stream among multiple output channels according to the channel identifier.

12. The method of claim 11, further comprising:

determining that the channel identifier specifies a wireless receiver; and

transmitting the mixed data stream to the wireless receiver.

13. The method of claim 11, further comprising:

determining that the channel identifier specifies a telecoil; and

transmitting the mixed data stream to the telecoil.

14. The method of claim 8, where receiving comprises:

receiving environmental sensor data.

15. A product comprising:

a machine readable medium; and

instructions stored on the machine readable medium for execution by a processor in a vehicular information distribution system, the instructions comprising:

instructions operable to receive a first information source data stream and a second information source data stream;

instructions operable to read configuration preferences;

instructions operable to mix the information source data streams according to the configuration preferences to form a mixed data stream; and

instructions operable to distribute the mixed data stream to an output channel specified in the configuration preferences.

16. The product of claim 15, where the instructions operable to mix comprise:

instructions operable to mix video data streams.

17. The product of claim 15, where the instructions operable to mix comprise:

instructions operable to mix video data streams to form a picture-in-picture mixed data stream.

18. The product of claim 15, where the instructions operable to receive comprise:

instructions operable to receive a navigation audio data stream and a second audio data stream; and further comprising:

instructions operable to increase volume of navigation information in the navigation audio data stream with respect to the second audio data stream.

19. The product of claim 18, where the instructions operable to mix comprise:

instructions operable to mix the navigation audio data stream and the second audio data stream to form the mixed data stream.

20. The product of claim 18, further comprising:

instructions operable to read a channel identifier from the configuration preferences;

instructions operable to determine that the channel identifier specifies a wireless receiver; and

instructions operable to initiate transmission of the mixed data stream to the wireless receiver.

* * * * *