US010578818B1

(12) **United States Patent**
Chen et al.

(10) **Patent No.: US 10,578,818 B1**
(45) **Date of Patent: Mar. 3, 2020**

(54) **OPTICAL TRANSCEIVER**

(71) Applicant: **Prime World International Holdings Ltd.**, New Taipei (TW)

(72) Inventors: **Yu Chen**, New Taipei (TW); **Hsuan-Chen Shiu**, New Taipei (TW); **Che-Shou Yeh**, New Taipei (TW)

(73) Assignee: **Prime World International Holdings Ltd.**, New Taipei (TW)

(*) Notice: Subject to any disclaimer, the term of this patent is extended or adjusted under 35 U.S.C. 154(b) by 0 days.

(21) Appl. No.: **16/153,685**

(22) Filed: **Oct. 5, 2018**

(51) **Int. Cl.**
G02B 6/42 (2006.01)
H01R 13/627 (2006.01)

(52) **U.S. Cl.**
CPC ***G02B 6/4284*** (2013.01); ***H01R 13/6275*** (2013.01)

(58) **Field of Classification Search**
CPC H01R 13/627; H01R 13/6271; H01R 13/6272; H01R 13/6275; H01R 13/62933; G02B 6/4284
USPC 385/76, 77, 88, 92; 398/139, 200, 201, 398/212, 214; 439/133, 304, 345, 346, 439/350, 352, 353, 354, 357, 358, 370
See application file for complete search history.

(56) **References Cited**

U.S. PATENT DOCUMENTS

7,699,641 B2 * 4/2010 Bright H01R 13/6275 439/352
9,720,189 B1 * 8/2017 Wang G02B 6/387
2005/0191892 A1 9/2005 Ishigami et al.
2011/0081114 A1 * 4/2011 Togami G02B 6/4246 385/76
2012/0106902 A1 5/2012 Thirugnanam et al.
2014/0134898 A1 * 5/2014 Wang H01R 13/6275 439/843
2015/0093083 A1 * 4/2015 Tsai G02B 6/423 385/92
2017/0363828 A1 * 12/2017 Zhu G02B 6/42

OTHER PUBLICATIONS

United States Non-Final Office Action related to U.S. Appl. No. 16/167,864 dated Feb. 25, 2019.

* cited by examiner

Primary Examiner — Robert Tavlykaev
(74) *Attorney, Agent, or Firm* — Grossman Tucker Perreault & Pfleger, PLLC

(57) **ABSTRACT**

An optical transceiver includes a main body, an elastic component and a fastening component. The main body includes two lateral surfaces and an outer surface between the two lateral surfaces, and the outer surface defines a confined groove. The elastic component is disposed in the confined groove. The fastening component is movably disposed on the main body. The fastening component includes a linkage arm, two extending arms and a confined portion. The linkage arm is disposed on the outer surface of the main body, and the two extending arms are connected with the linkage arm. The two extending arms are respectively disposed on the two lateral surfaces. The confined portion is connected with the linkage arm and extends into the confined groove in order to press the elastic component. The two extending arms are detachably fasten-able with the cage.

12 Claims, 8 Drawing Sheets

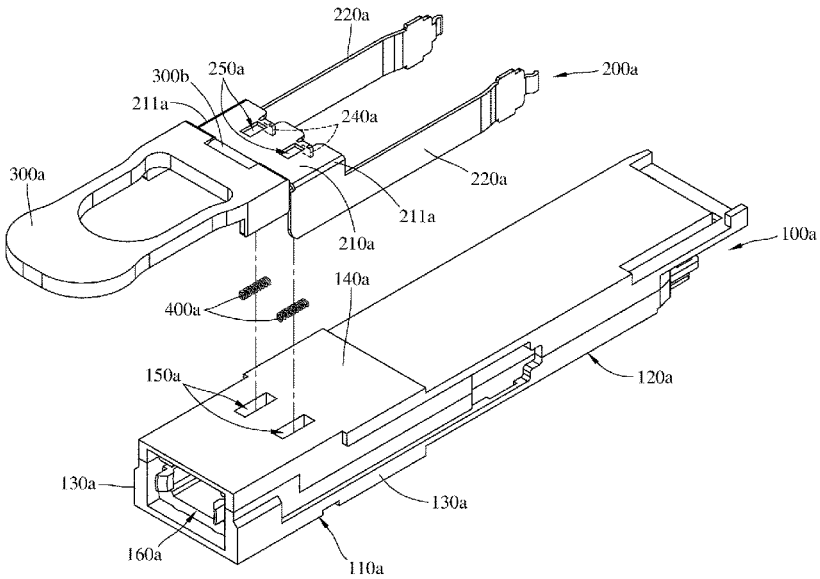

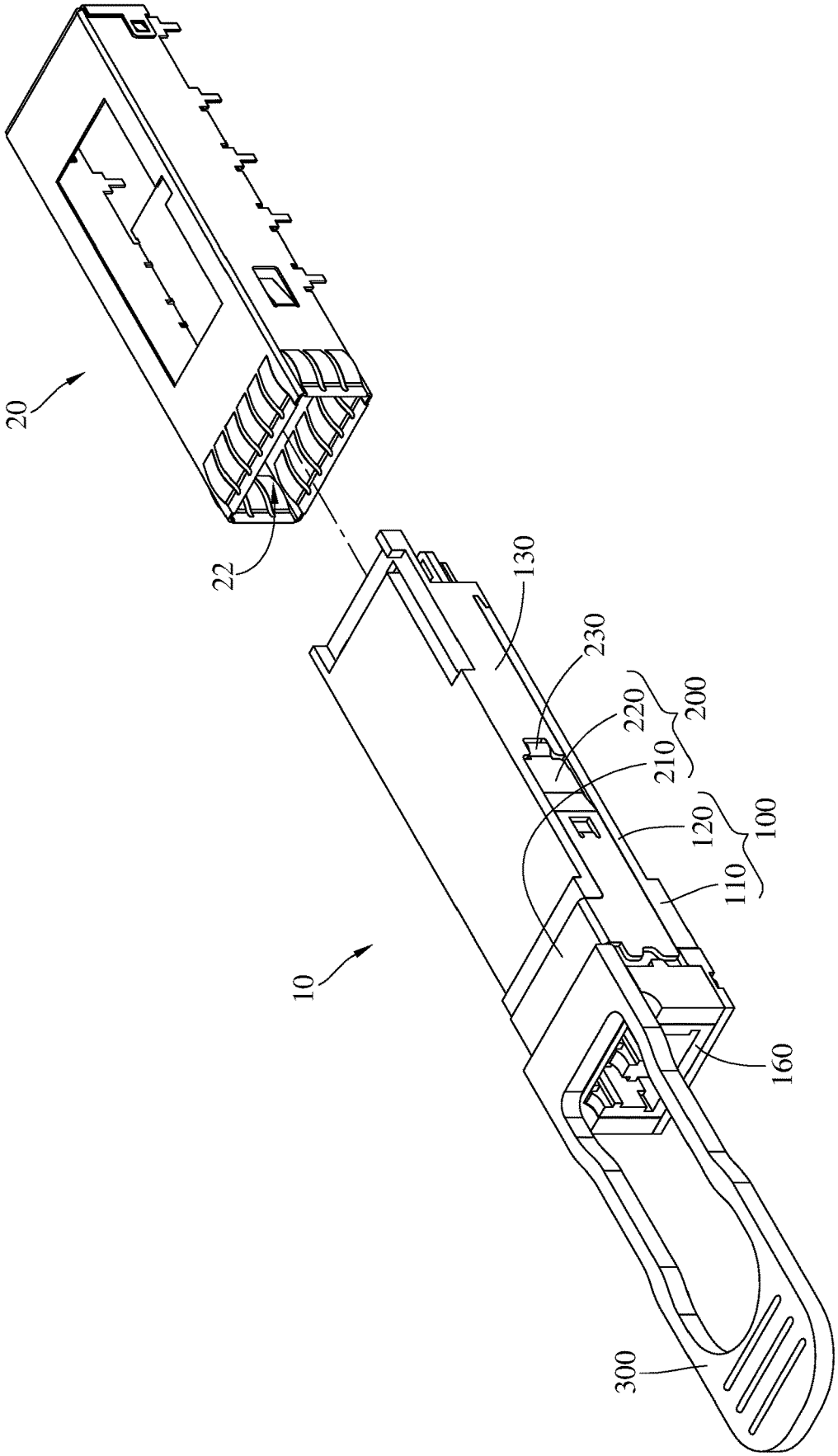

FIG. 1

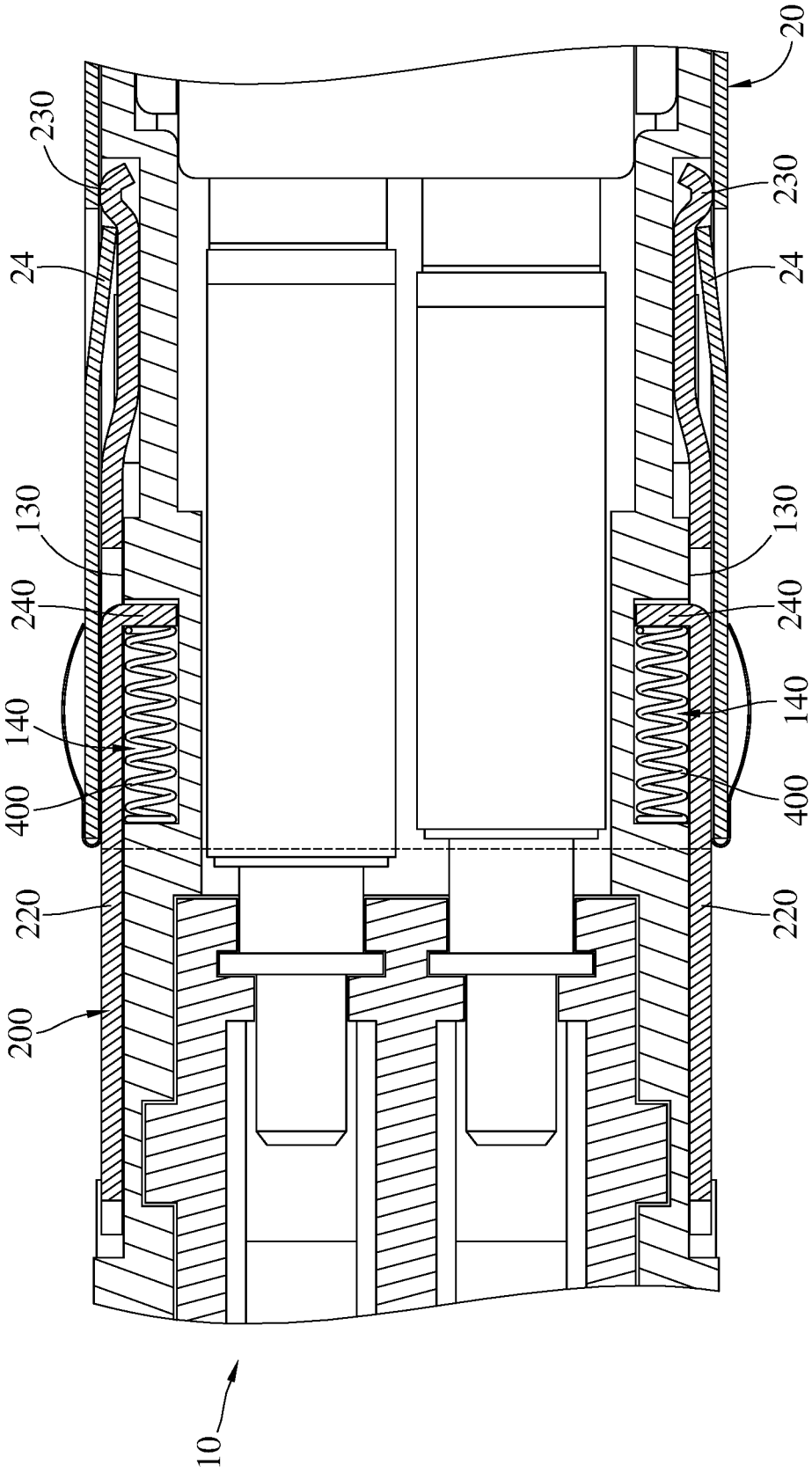

FIG. 2

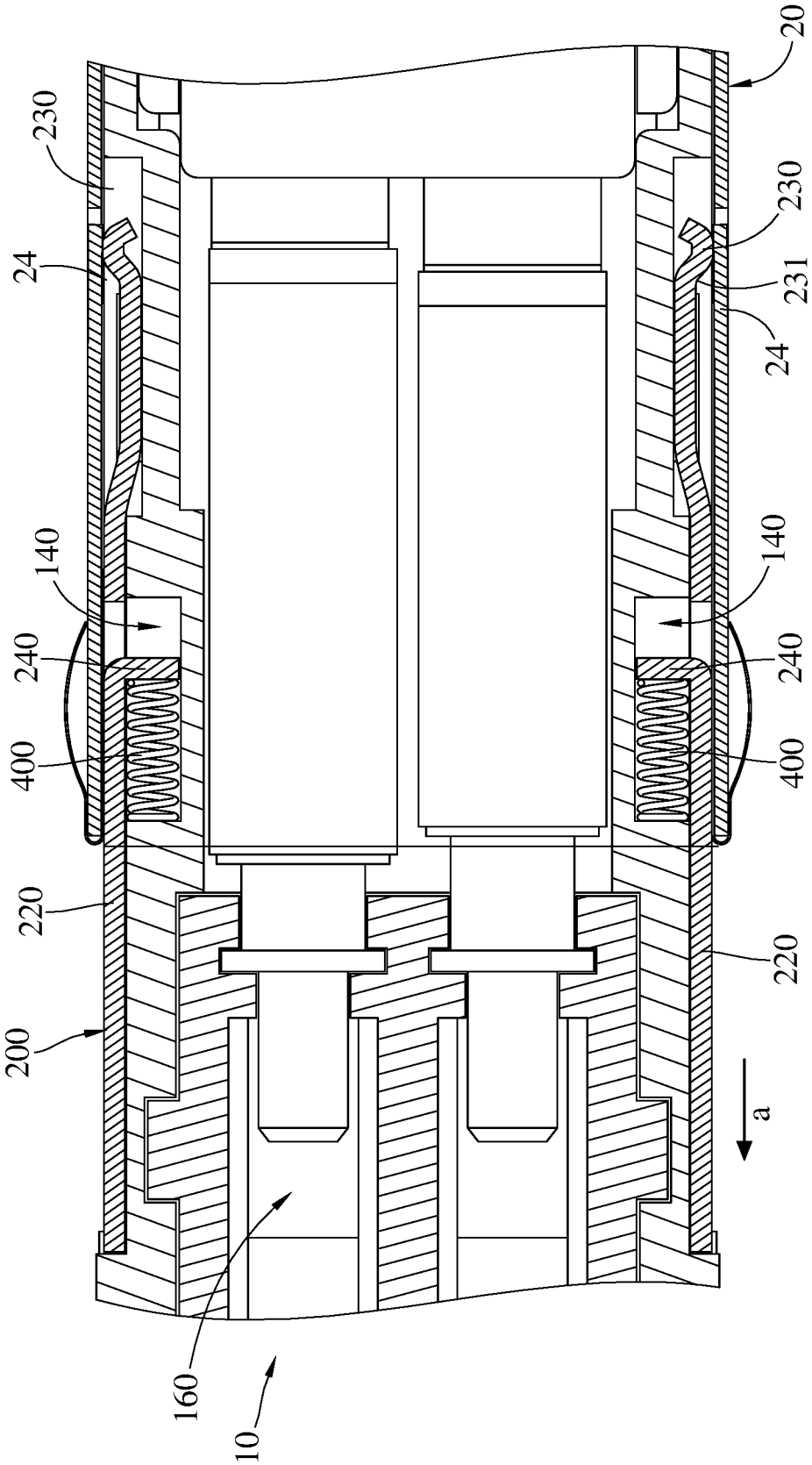

FIG. 3

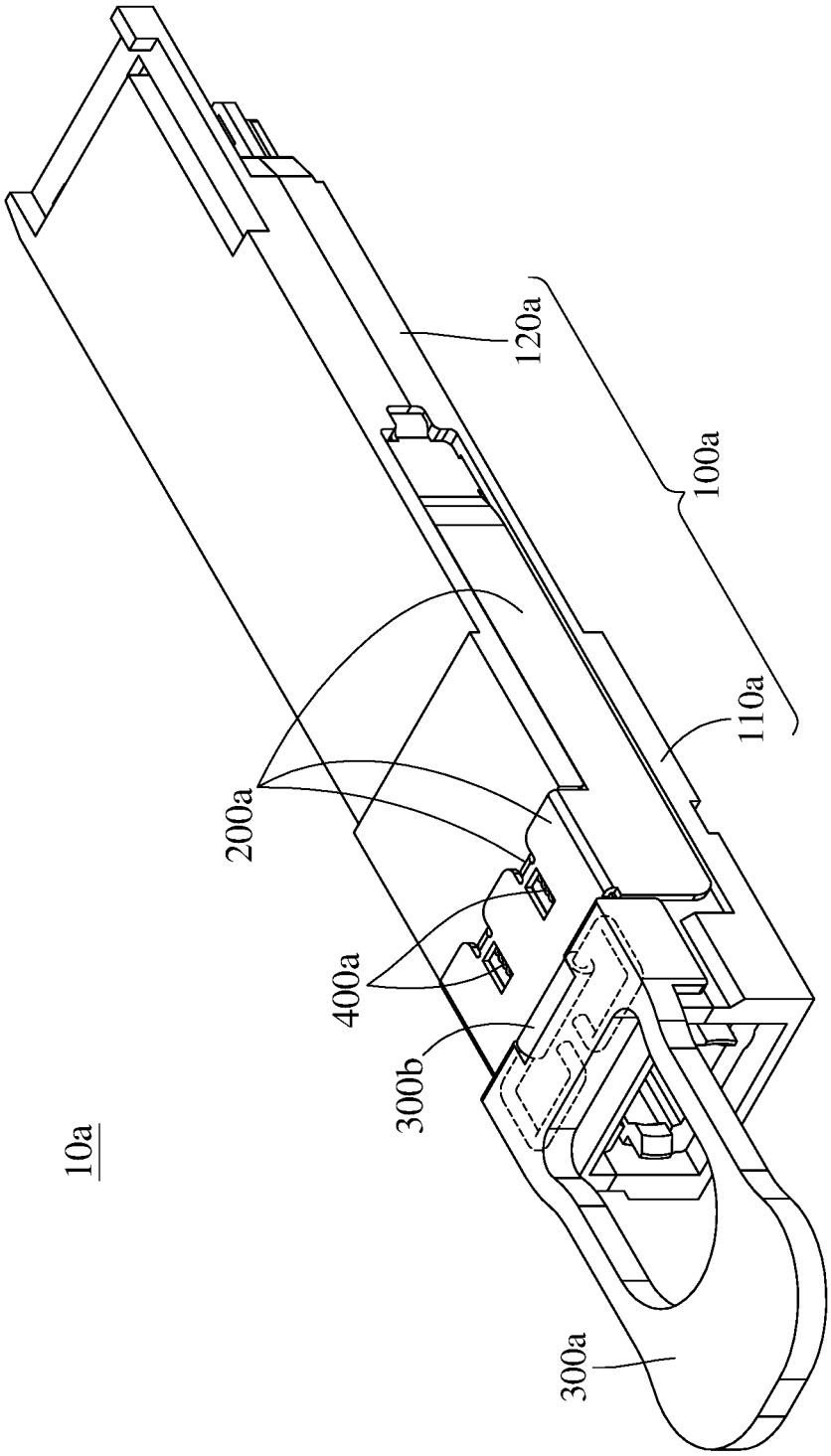

FIG. 4

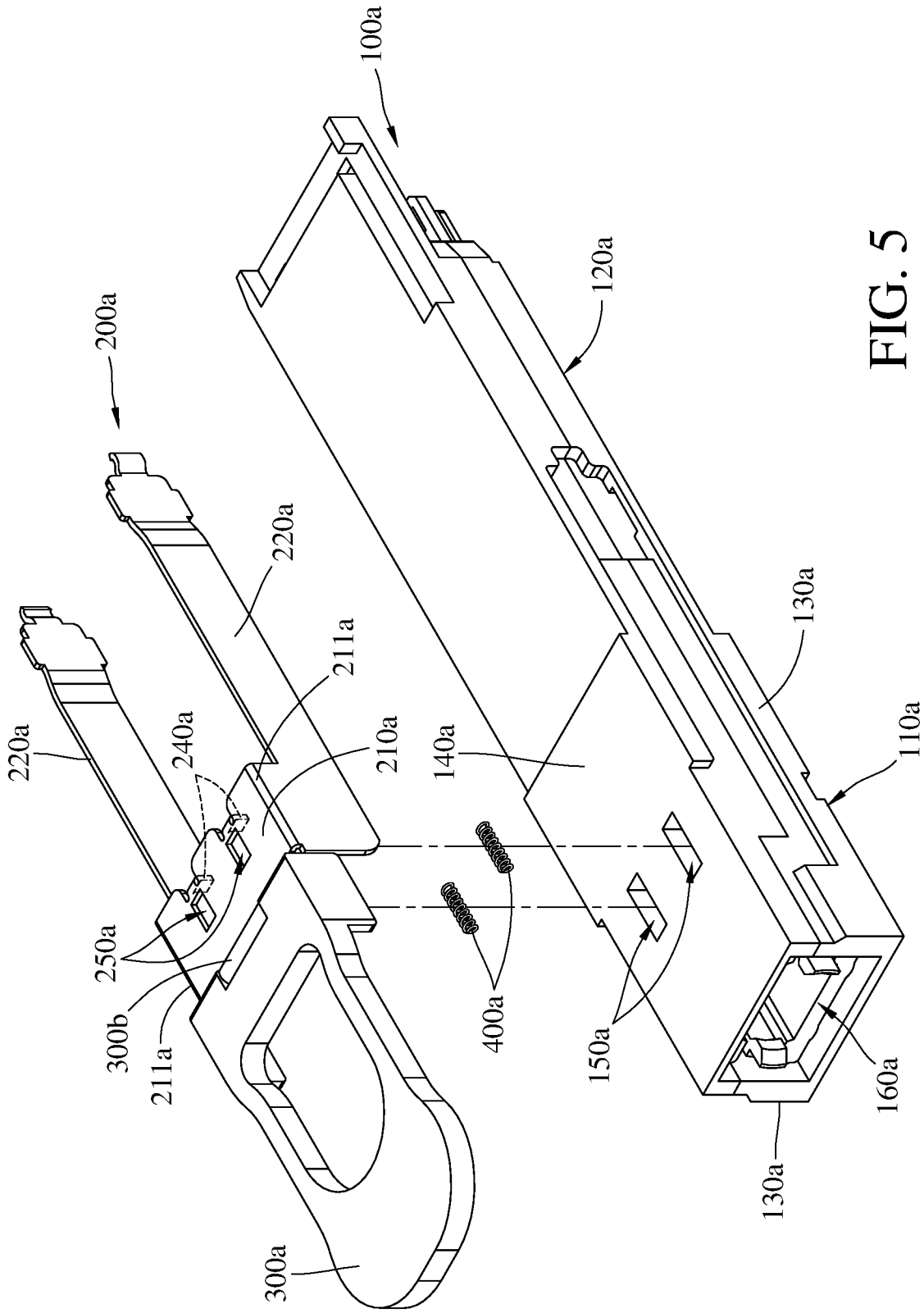
100a
120a
200a
220a
220a
211a
240a
210a
140a
130a
110a
250a
300b
211a
400a
150a
160a
130a
300a

FIG. 5

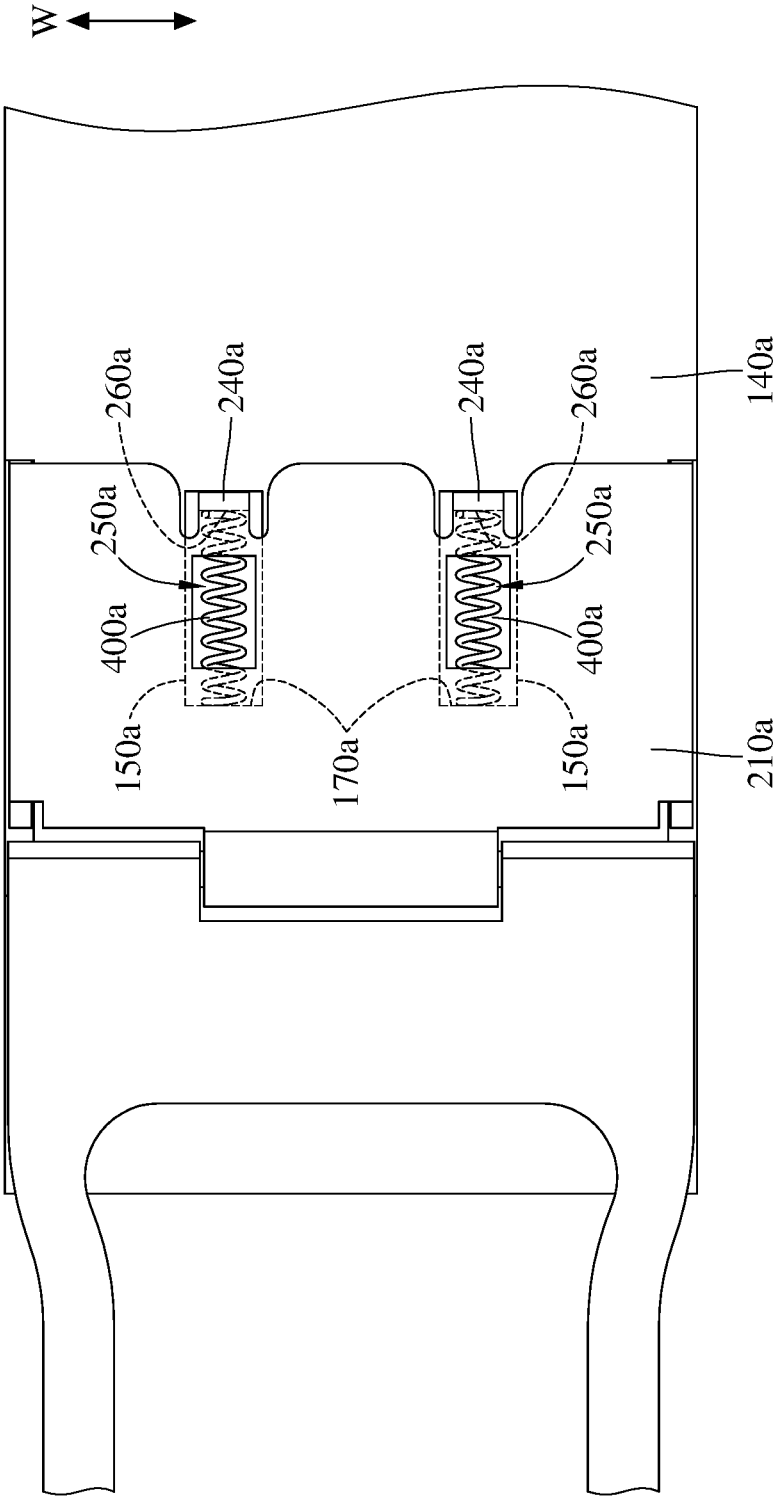
W
260a
240a
240a
260a
140a
250a
250a
400a
400a
150a
170a
150a
210a

FIG. 6

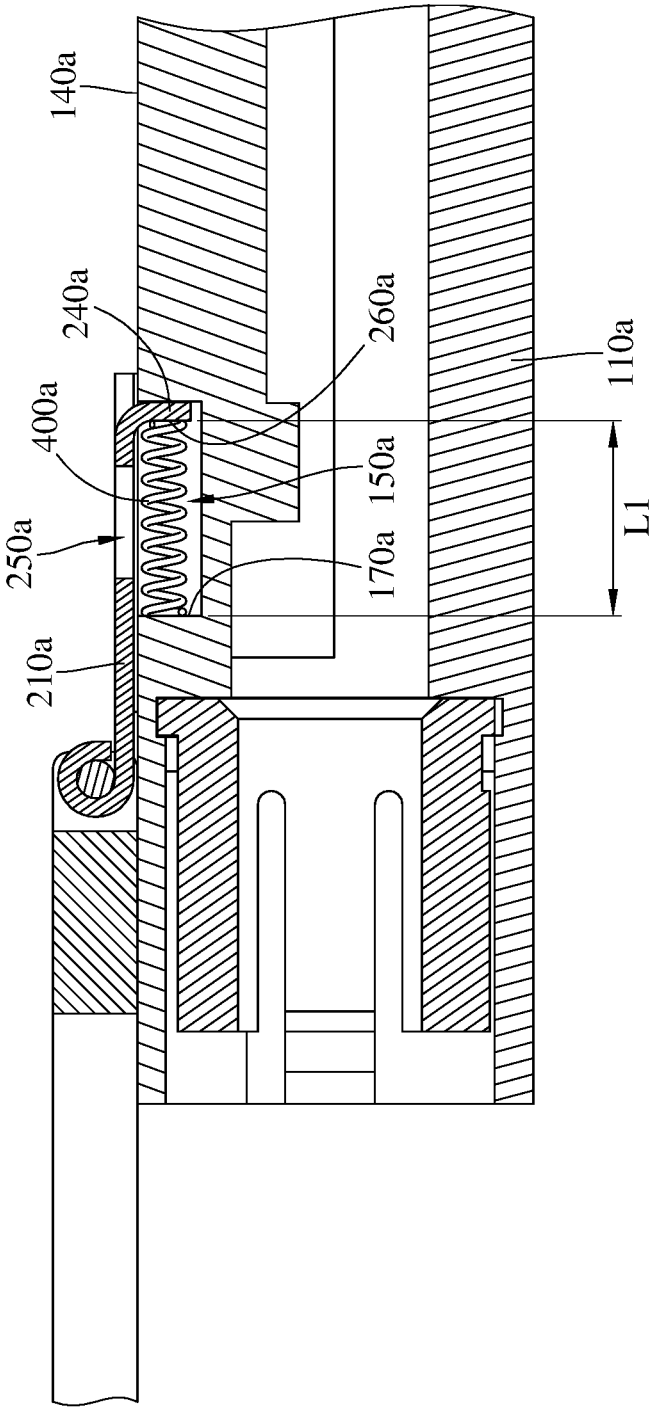

FIG. 7

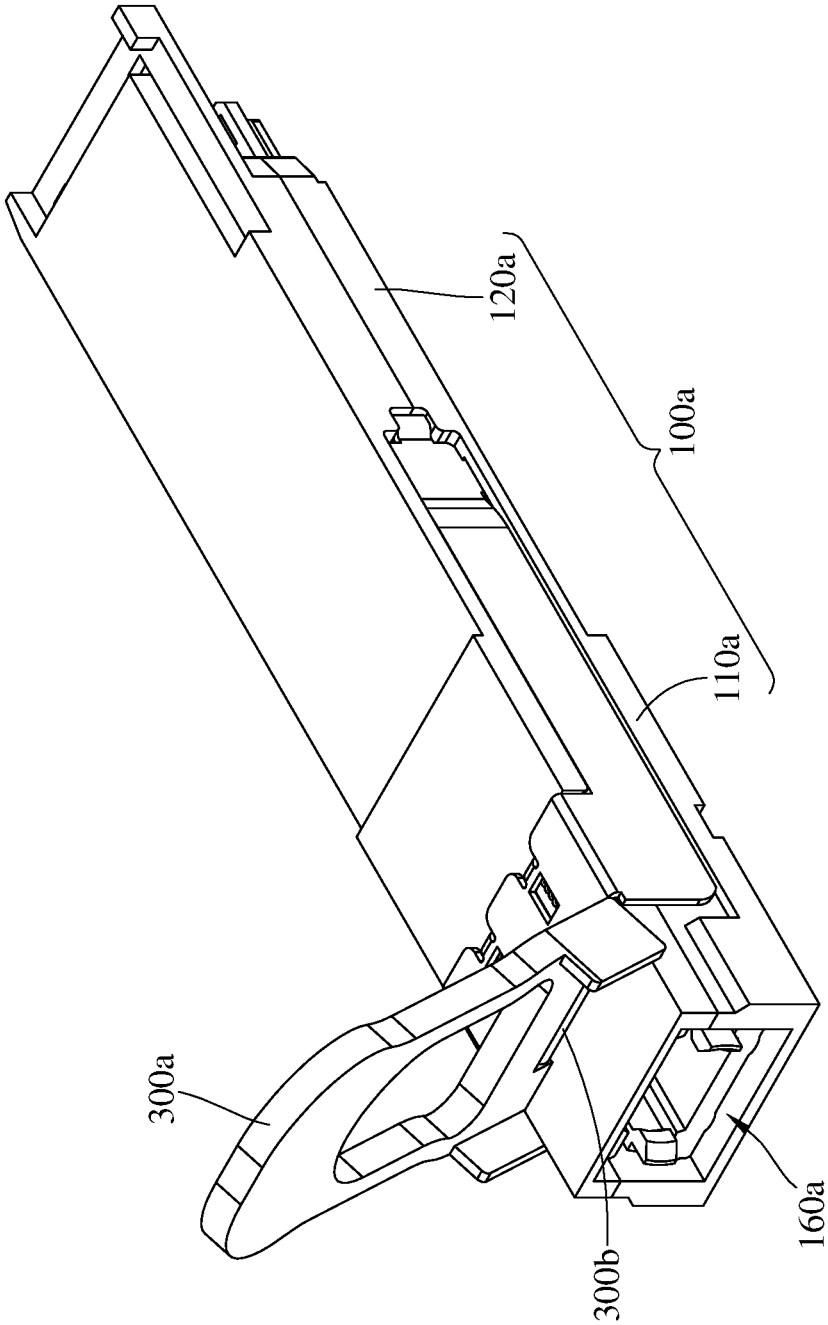

FIG. 8

OPTICAL TRANSCEIVER

TECHNICAL FIELD

The disclosure relates to an optical communication device, more particularly to a pluggable optical transceiver.

BACKGROUND

Optical transceivers are generally installed in electronic communication facilities in modern high-speed communication networks. In order to make flexible the design of an electronic communication facility and less burdensome the maintenance of the same, an optical transceiver is inserted into a corresponding cage that is disposed in the communication facility in a pluggable manner. In order to define the electrical-to-mechanical interface of the optical transceiver and the corresponding cage, different specifications such as XFP (10 Gigabit Small Form Factor Pluggable) used in 10 GB/s communication rate, QSFP (Quad Small Form-factor Pluggable), or other form factors at different communication rates.

A fastening mechanism is provided for securely fixing the optical transceiver to the cage. On the other hand, the optical transceiver must include a releasing mechanism so that the optical transceiver could be released from the cage smoothly when necessary.

SUMMARY

According to one aspect of the present disclosure, an optical transceiver is disclosed. Such disclosed optical transceiver in one embodiment includes a main body, an elastic component and a fastening component. The main body includes two lateral surfaces and an outer surface between the two lateral surfaces, and the outer surface defines a confined groove. The elastic component is disposed in the confined groove. The fastening component is movably disposed on the main body. The fastening component includes a linkage arm, two extending arms and a confined portion. The linkage arm is disposed on the outer surface of the main body, and the two extending arms are connected with the linkage arm. The two extending arms are respectively disposed on the two lateral surfaces. The confined portion is connected with the linkage arm and extends in the confined groove in order to press the elastic component. The two extending arms are detachably fasten-able with the cage.

According to another aspect of the present disclosure, an optical transceiver is disclosed. Such disclosed optical transceiver in one embodiment includes a main body, two elastic components and a fastening component. The main body includes two lateral surfaces and an outer surface between the two lateral surfaces, and the outer surface defines two confined grooves spaced apart from each other. The two elastic components are disposed in the two confined grooves, respectively. The fastening component is movably disposed on the main body. The fastening component includes a linkage arm, two extending arms and two confined portions. The linkage arm is disposed on the outer surface of the main body, and the two extending arms are connected with the linkage arm. The two extending arms are respectively disposed on the two lateral surfaces. The confined portions are connected with the linkage arm and are respectively extend into the two confined grooves in order to press the two elastic components. The two extending arms are detachably fasten-able with the cage.

BRIEF DESCRIPTION OF THE DRAWINGS

The present disclosure will become more fully understood from the detailed description given below and the accompanying drawings which are given by way of illustration only and thus are not intending to limit the present disclosure and wherein:

FIG. **1** is a perspective view of an optical transceiver and a cage according to a first embodiment of the present disclosure;

FIG. **2** is a partially enlarged view of the optical transceiver in FIG. **1**, with a fastening component at a fastening position;

FIG. **3** is a partially enlarged cross-sectional view of the optical transceiver in FIG. **1**, with the fastening component at a releasing position;

FIG. **4** is a perspective view of an optical transceiver according to a second embodiment of the present disclosure;

FIG. **5** is an exploded view of the optical transceiver in FIG. **4**;

FIG. **6** is a partially enlarged cross-sectional view of the optical transceiver in FIG. **4** along line **6-6**;

FIG. **7** is a partially enlarged cross-sectional view of the optical transceiver in FIG. **4** along line **7-7**; and

FIG. **8** is a perspective view of the optical transceiver in FIG. **4**, with a bail at an upright position.

DETAILED DESCRIPTION

In the following detailed description, for purposes of explanation, numerous specific details are set forth in order to provide a thorough understanding of the disclosed embodiments. It will be apparent, however, that one or more embodiments may be practiced without these specific details. In other instances, well-known structures and devices are schematically shown in order to simplify the drawing.

Please refer to FIG. **1** and FIG. **2**. FIG. **1** is a perspective view of an optical transceiver and a cage according to a first embodiment of the present disclosure. FIG. **2** is a partially enlarged view of the optical transceiver in FIG. **1**, with a fastening component at a fastening position. In this embodiment, an optical transceiver **10** is disclosed, and the optical transceiver **10** is inserted into a cage **20** in pluggable manner. The optical transceiver **10** includes a main body **100**, a fastening component **200**, a bail **300** and two elastic components **400**.

The main body **100**, for example, is a housing including a head portion **110** and an insertion portion **120** connected with each other. The insertion portion **120** is configured to be inserted into a plugging slot **22** of the cage **20**. The head portion **110** of the optical transceiver **10** includes two lateral surfaces **130**, two sliding rails and two confined grooves **140**. The two sliding rails are respectively formed on the two lateral surfaces **130** and extend from the head part **110** to the insertion portion **120**. The two confined grooves **140** are respectively formed on the two lateral surfaces **130** for accommodating the two elastic components **400**.

The fastening component **200** includes a linkage arm **210** and two extending arms **220**. The two extending arms **220** are respectively connected with two opposite ends of the linkage arm **210**, such that the linkage arm **210** is located between the two extending arms **220**. The two extending arms **220** are movably disposed on the sliding rails at the lateral surfaces **130**, respectively. Each of the extending arms **220** includes a fastening portion **230** and a confined portion **240**. The fastening portion **230** extends along a

direction far away from the lateral surface **130** to be detachably fasten-able with the cage **20**. The confined portion **240** extends into the confined groove **140** for pressing the elastic component **400**.

The bail **300** is connected with the linkage arm **210** of the fastening component **200** and extends outside from the main body **100**. The bail **300** is made of rubber and bendable to be in front of the head part **110** or on the top of the head part **110**.

The elastic components **400** constantly press the confined portion **240** of the fastening component **200**. It is worth noting that numbers of the confined grooves **140** and the elastic components **400** are not limited in view of embodiments in the present disclosure.

The fastening component **200** is movable relative to the main body **100** to be at either a fastening position (as shown in FIG. **2**) and a releasing position (as shown in FIG. **3**). Please refer to FIG. **2** and FIG. **3**. FIG. **3** is a partially enlarged cross-sectional view of the optical transceiver in FIG. **1**, with the fastening component at a releasing position.

In FIG. **2**, the two elastic components **400** respectively press the two confined portions **240** so that the fastening component **200** could be located at the fastening position, and thus the fastening portions **230** are securely fastened with the cage **20**. Therefore, the optical transceiver **10** is readily and reliably inserted into the plugging slot **22** of the cage **20**.

The bail **300** is able to be drawn along the direction indicated by an arrow a. In FIG. **3**, the fastening component **200** is moved by the bail **300** relative to the main body **200** to be at the releasing position. The fastening portion **230** presses a flexible arm **24** of the cage **20** so that the fastening component **200** slides along an inclined surface **231** of the fastening portion **230**. The fastening portion **230** bends the flexible arm **24** to allow the fastening component **200** to move to the releasing position. The insertion portion **120** of the main body **100** is removed from the cage **20** when the bail **300** is pulled much farther.

When the fastening component **200** is at the releasing position, the two confined portions **240** respectively compress the two elastic components **400**. As the bail **300** is released, the elastic energy stored in the elastic components **400** drives the fastening component **200** back to the fastening position.

The bail **300** could be moved around to be located above the head part **110** of the main body **100**, creating some room for an optical fiber plug (not shown in the drawings) to be plugged into an optical fiber terminal **160** more conveniently.

In the first embodiment, that the bail **300** could help move the fastening component **200** renders possible the fastening component to fasten to or be released from the cage.

In the first embodiment, the elastic component **400** is disposed in the confined groove **140** which is formed on the lateral surface **130** of the main body **100**, and the confined portion **240** of the extending arm **220** presses the elastic component **400**. However, since the trend of evolution of the optical transceiver **10** somewhat focuses on the reduction in size of the entire transceiver as well as the inside space of the main body **100**. In order to form the confined grooves **140** on the lateral surfaces **130**, the space inside the main body **100** is restricted in a width direction, such that it is unfavorable for the arrangement of electronic components such as multiple transmitters and multiple receivers.

Furthermore, the bail **300** could be moved around with respect to the main body **100** in the first embodiment. However, absent application of any external force may make the bail **300** simply go back to its initial position, such that extra maneuver of the bail **300** is required for any optical fiber to be plugged into the optical fiber terminal **160** (which might be a switch).

A configuration of the optical transceiver **10** could be improved. Please refer to FIG. **4** and FIG. **5**. FIG. **4** is a perspective view of an optical transceiver according to a second embodiment of the present disclosure. FIG. **5** is an exploded view of the optical transceiver in FIG. **4**. In this embodiment, an optical transceiver **10***a* is a QSFP-DD (Quad Small Form-factor Pluggable Double Density) optical transceiver, and the optical transceiver **10** is configured to be inserted into a cage (not shown in the drawings) in pluggable manner. The optical transceiver **10***a* includes a main body **100***a*, a fastening component **200***a*, a bail **300***a*, a pivot shaft **300***b* and two elastic components **400***a*.

Please further refer to FIG. **6** and FIG. **7**. FIG. **6** is a partially enlarged cross-sectional view of the optical transceiver in FIG. **4** along line **6-6**. FIG. **7** is a partially enlarged cross-sectional view of the optical transceiver in FIG. **4** along line **7-7**. The main body **100***a* includes a head portion **110***a* and an insertion portion **120***a* connected with each other. The head portion **110***a* of the main body **100***a* includes two lateral surfaces **130***a*, an outer surface **140***a* and an optical fiber terminal **160***a*. The outer surface **140***a* is between the two lateral surfaces **130***a*, and the outer surface **140***a* defines two confined grooves **150***a* which are spatially spaced apart from each other. The head portion **110***a* of the main body **100***a* further includes two first confined surfaces **170***a* with the two confined grooves **150***a* formed respectively. In this embodiment, the outer surface **140***a* is a top surface on an upper cover of the main body **100***a*, but the disclosure is not limited thereto. In some other embodiments, the outer surface is a bottom surface on a bottom cover of the main body **100***a*. An accommodation space inside the main body **100***a* allows for placement of components such as the optical fiber terminal **160***a*, a circuit board, photodiodes, laser emitters, and IC chips.

The fastening component **200***a* is movably disposed on the main body **100***a* and includes a linkage arm **210***a*, two extending arms **220***a* and two confined portions **240***a*. The two extending arms **220***a* are respectively connected with two opposite ends of the linkage arm **210***a*, such that the linkage arm **210***a* is located between the two extending arms **220***a*. The two extending arms **220** are movably disposed on the lateral surfaces **130***a* respectively, and the extending arms **220** are detachably fasten-able with the cage. The linkage arm **210***a* is disposed on the outer surface **140***a* of the main body **100***a*, and the linkage arm **210***a* includes two openings **250***a* respectively connected with the two confined groove **150***a*. The two confined portions **240***a* are connected with the linkage arm **210***a*, and the two confined portions **240***a* respectively extend into the confined grooves **150***a*. In this embodiment, a process of stamping is performed to cut and deform part of the linkage arm **210***a* to form the confined portions **240***a* and the openings **250***a* of the fastening component **200***a*. The opening **250***a* is located in proximity of the confined portion **240***a*.

The pivot shaft **300***b* is pivoted on the linkage arm **210***a* of the fastening component **200***a*, and the bail **300***a* disposed on the pivot shaft **300***b*. FIG. **8** is a perspective view of the optical transceiver in FIG. **4**, with a bail at an upright position. The bail **300***a* extends outside from the main body **100***a*. When the bail **300***a* is at a horizontal position, the bail **300***a* protects the optical fiber terminal **160***a* from dust, and the insertion portion **120***a* of the main body **100***a* is removed from the cage when the horizontal bail **300***a* is drawn. The

bail **300***a* could be moved from the horizontal position to an upright position so as render convenient installation or removal of the optical fibers without requiring the bail **300***a* being held manually or by other means. With the pivot shaft **300***b*, the bail **300***a* could stay at the upright position even without any application of the external force to the bail **300***a*.

Each of the elastic components **400***a*, for example, is a spring compressed by the confined portion **240***a* of the fastening component **200***a*. In detail, each confined portion **240***a* of the fastening component **200***a* includes a second confined surface **260***a* facing toward the first confined surface **170***a* of the main body **100***a*. The elastic component **400***a* is disposed between the first confined surface **170***a* and the second confined surface **260***a*. When the fastening component **200***a* moves relative to the main body **100***a*, the confined portion **240***a* moves in the confined groove **150***a* and compresses the elastic component **400***a*.

It is worth noting that numbers of the confined grooves **150***a*, the extending arms **220***a*, the confined portions **240***a*, the openings **250***a* and the elastic components **400***a* are not limited because of the embodiments discussed in the present disclosure.

The opening **250***a* of the fastening component **200***a* exposes the elastic component **400***a* to outside. In detail, a method of positioning the elastic component **400***a* in the confined groove **150***a* is to compress the elastic component **400***a* by hand, and then put the elastic component **400***a* into the confined groove **150***a* through the opening **250***a*. Therefore, the elastic component **400***a* could be mounted or unmounted with more efficiency. As shown in FIG. **7**, to maintain the position of the elastic component **400***a*, a size of the opening **250***a* is smaller than a length L**1** of the elastic component **400***a* in an uncompressed condition. The uncompressed condition is a condition that the confined portion **240***a* of the fastening component **200***a* does not compress the elastic component **400***a*.

Furthermore, as shown in FIG. **5**, the opening **250***a* is located between two ends **211***a* of the linkage arm **210***a* where the two extending arms **220***a* are respectively connected. Therefore, the opening **250***a* does not formed at an edge of the linkage arm **210***a*, such that it is favorable for an easier manufacture of the fastening component **200***a* since the edge of the linkage arm **210***a* is difficult to be processed due to higher internal stress.

According to the present disclosure, in the second embodiment, the elastic component **400***a* is disposed in the confined groove **150***a*, and the confined groove **150***a* is formed on the top surface of the main body **100***a* rather than on the lateral surface **130***a*. Therefore, more accommodation space inside the main body **100***a* could be provided in a width direction W to accommodate electronic components for high-speed communication, thereby meeting the requirements of compact optical transceiver **10***a* and proper space utilization of the same.

The embodiments are chosen and described in order to best explain the principles of the present disclosure and its practical applications, to thereby enable others skilled in the art to best utilize the present disclosure and various embodiments with various modifications as are suited to the particular use that is being contemplated. It is intended that the scope of the present disclosure is defined by the following claims and their equivalents.

What is claimed is:

1. An optical transceiver, configured to be inserted into a cage in a pluggable manner, comprising:

a main body comprising two lateral surfaces and an outer surface between the two lateral surfaces, and the outer surface defining a confined groove;

an elastic component disposed in the confined groove; and

a fastening component movably disposed on the main body, the fastening component comprising a linkage arm, two extending arms and a confined portion, wherein the linkage arm is disposed on the outer surface of the main body, and wherein the linkage arm comprises an opening in communication with the confined groove of the main body to allow the elastic component to pass through the opening and be disposed in the confined groove, the two extending arms are connected with the linkage arm, the two extending arms are respectively disposed on the two lateral surfaces, the confined portion is connected with the linkage arm and extends into the confined groove in order to press the elastic component, and the two extending arms are detachably fasten-able with the cage.

2. The optical transceiver according to claim **1**, wherein the outer surface is either a top surface or a bottom surface of the main body.

3. The optical transceiver according to claim **1**, wherein the main body comprises a first confined surface forming the confined groove, the confined portion of the fastening component comprises a second confined surface facing toward the first confined surface, and the elastic component is disposed between the first confined surface and the second confined surface.

4. The optical transceiver according to claim **1**, wherein a size of the opening is smaller than a length of the elastic component in an uncompressed condition.

5. The optical transceiver according to claim **1**, wherein the opening is located between two ends of the linkage arm where the two extending arms are connected.

6. The optical transceiver according to claim **1**, wherein the confined portion and the opening of the fastening component are formed by stamping.

7. The optical transceiver according to claim **1**, wherein the main body comprises a head portion and an insertion portion connected with each other, the insertion portion is configured to be inserted into the cage in a pluggable manner, the head portion comprises the outer surface, the two lateral surfaces and an optical fiber terminal.

8. The optical transceiver according to claim **1**, further comprising a pivot shaft pivoted on the linkage arm of the fastening component and a bail connected with the pivot shaft.

9. The optical transceiver according to claim **1**, wherein the optical transceiver is a QSFP-DD (Quad Small Formfactor Pluggable Double Density) optical transceiver.

10. An optical transceiver, comprising:

a main body comprising two lateral surfaces and an outer surface between the two lateral surfaces, and the outer surface defining two confined grooves spaced apart from each other;

two elastic components disposed in the two confined grooves, respectively; and

a fastening component movably disposed on the main body, the fastening component comprising a linkage arm, two extending arms and two confined portions, wherein the linkage arm is disposed on the outer surface of the main body, and wherein the linkage arm comprises an opening in communication with the confined groove of the main body to allow the elastic component to pass through the opening and be disposed in the confined groove, the two extending arms are

connected with the linkage arm, the two extending arms are respectively disposed on the two lateral surfaces, the confined portions are connected with the linkage arm and respectively extend into the two confined grooves in order to press the two elastic components.

11. An optical transceiver, configured to be inserted into a cage in a pluggable manner, comprising:

a main body comprising two lateral surfaces and an outer surface between the two lateral surfaces, and the outer surface defining a confined groove;

an elastic component disposed in the confined groove;

a fastening component movably disposed on the main body, the fastening component comprising a linkage arm, two extending arms and a confined portion, wherein the linkage arm is disposed on the outer surface of the main body, and wherein the linkage arm comprises an opening in communication with the confined groove of the main body to allow the elastic component to pass through the opening and be disposed in the confined groove, the two extending arms are connected with the linkage arm, the two extending arms are respectively disposed on the two lateral surfaces, the confined portion is connected with the linkage arm and extends into the confined groove in order to press the elastic component, and the two extending arms are detachably fasten-able with the cage; and

a pivot shaft pivoted on the linkage arm of the fastening component and a bail connected with the pivot shaft, the bail having a horizontal position to allow the bail to be drawn for removal of the optical transceiver from the cage, and an upright position to allow for installation or removal of optical fibers into the optical transceiver.

12. The optical transceiver of claim **11**, wherein the bail is configured to remain in the upright position without application of external force.

* * * * *