US 20140039348A1

(19) United States

(12) Patent Application Publication

BULLINGTON et al.

(10) Pub. No.: US 2014/0039348 A1

(43) Pub. Date: Feb. 6, 2014

(54) **FLUID DIVERSION MECHANISM FOR BODILY-FLUID SAMPLING**

(71) Applicant: **Magnolia Medical Technologies, Inc.**, Seattle, WA (US)

(72) Inventors: **Gregory J. BULLINGTON**, Bellevue, WA (US); **Richard G. Patton**, Seattle, WA (US); **Jay M. MIAZGA**, Seattle, WA (US); **Shan E. GAW**, Seattle, WA (US)

(73) Assignee: **Magnolia Medical Technologies, Inc.**, Seattle, WA (US)

(21) Appl. No.: **13/952,964**

(22) Filed: **Jul. 29, 2013**

Related U.S. Application Data

(60) Provisional application No. 61/678,404, filed on Aug. 1, 2012.

Publication Classification

(51) **Int. Cl.**
A61B 10/00 (2006.01)

(52) **U.S. Cl.**
CPC ***A61B 10/0045*** (2013.01)
USPC **600/578**; 422/546; 600/573

(57) **ABSTRACT**

A device includes a pre-sample reservoir, an actuator mechanism, and a diverter. The pre-sample reservoir can be fluidically coupled to a delivery member to receive and isolate a predetermined volume of bodily-fluid withdrawn from a patient. The actuator mechanism is operably coupled to the pre-sample reservoir such that, when actuated, a negative pressure is formed in the pre-sample reservoir that urges the bodily-fluid to flow into the pre-sample reservoir. The diverter can selectively control fluid flow between the delivery member and the pre-sample reservoir. The diverter includes a flow control mechanism that defines a first fluid flow path and a second fluid flow path. The diverter is movable between a first configuration in which the bodily-fluid flows through the first fluid flow path to the pre-sample reservoir, and a second configuration in which the bodily-fluid flows through the second fluid flow path to a sample reservoir coupled to the diverter.

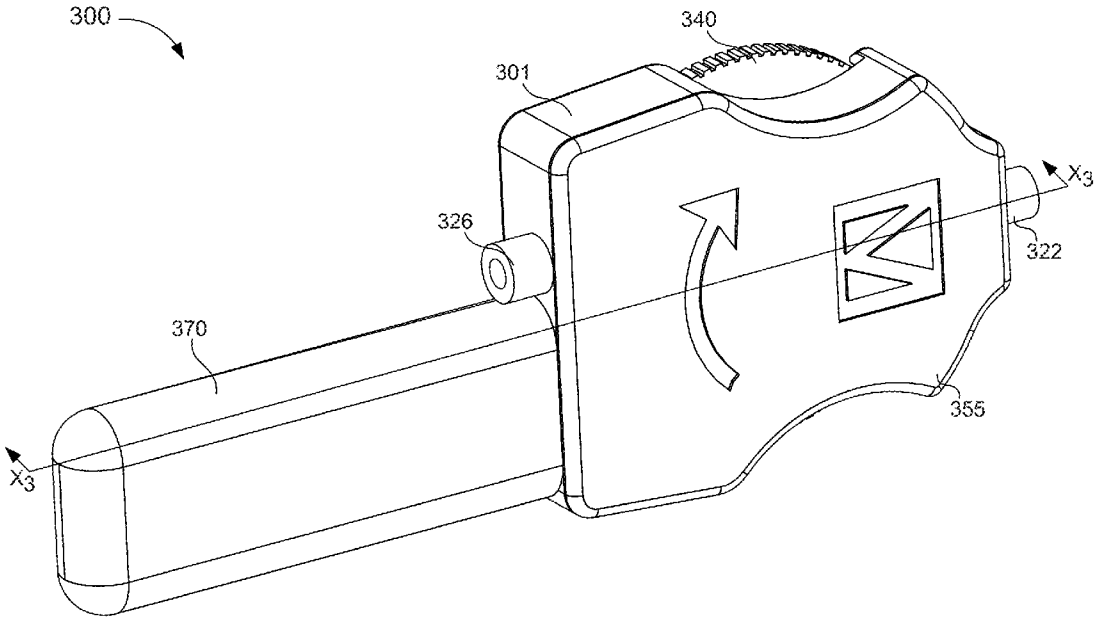

Magnolia, Ex. 1028

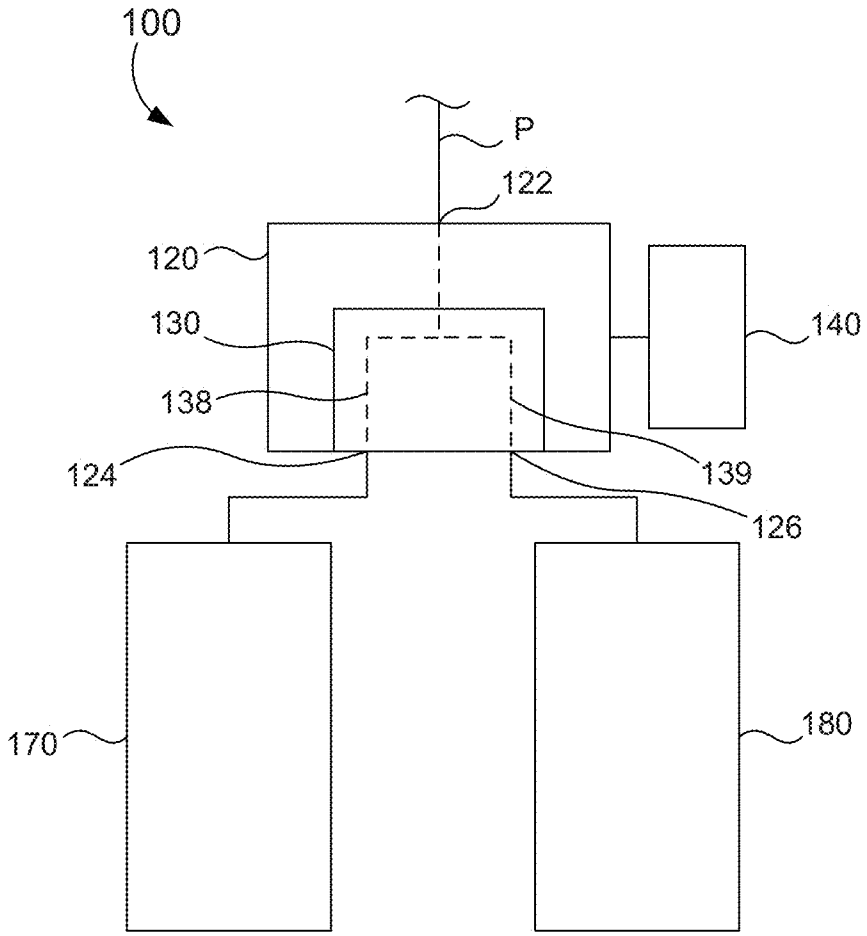

FIG. 1

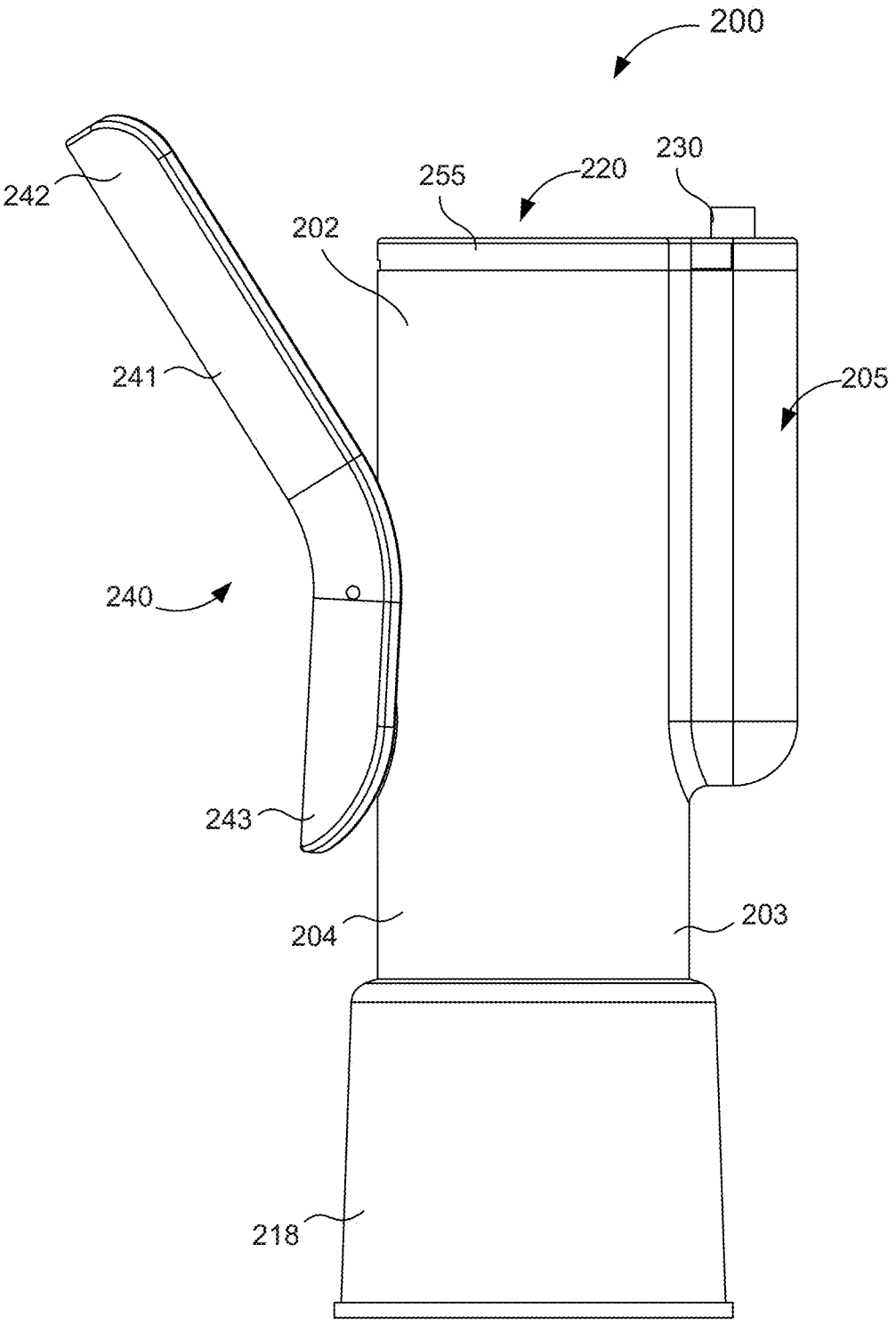

FIG. 2

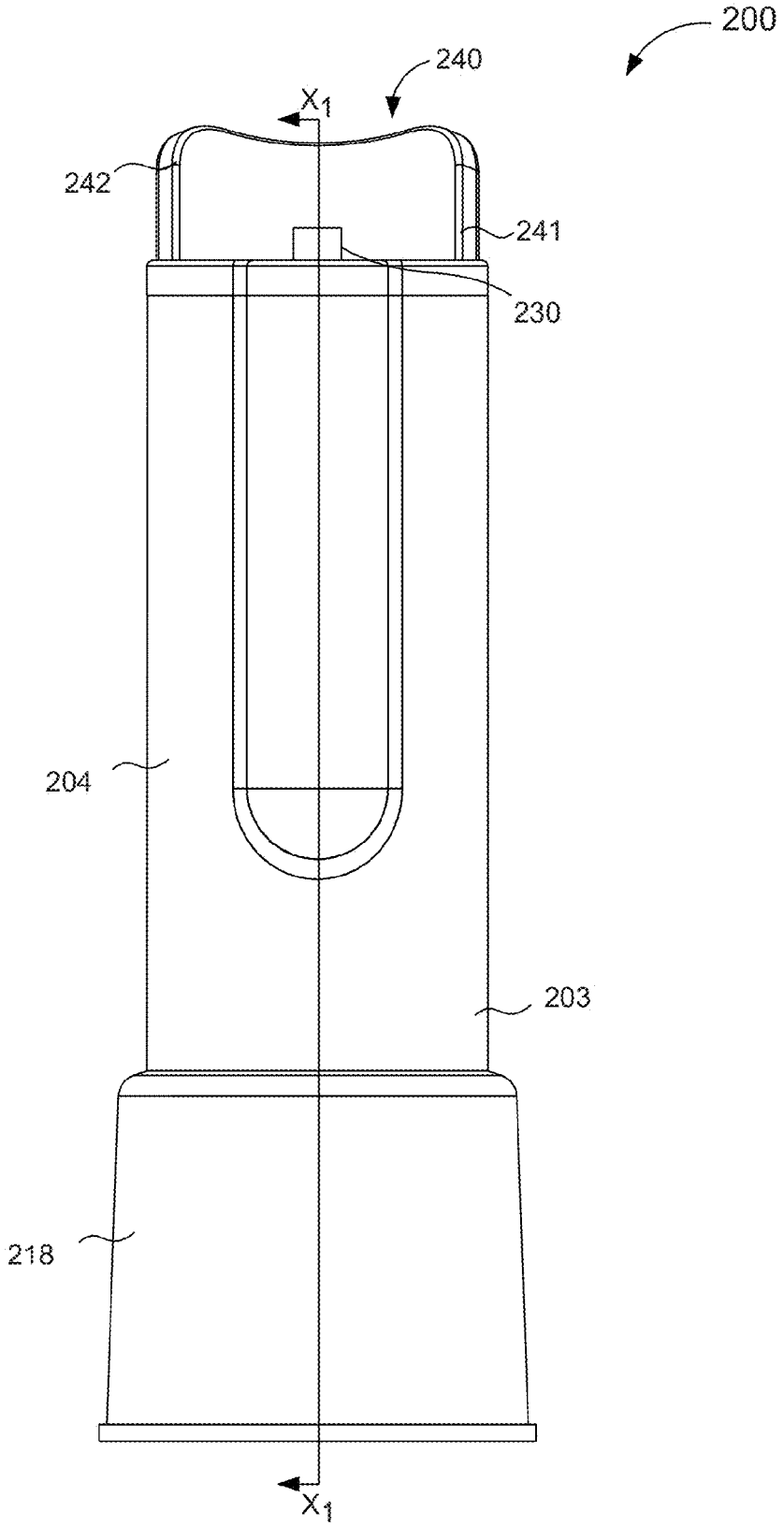

FIG.3

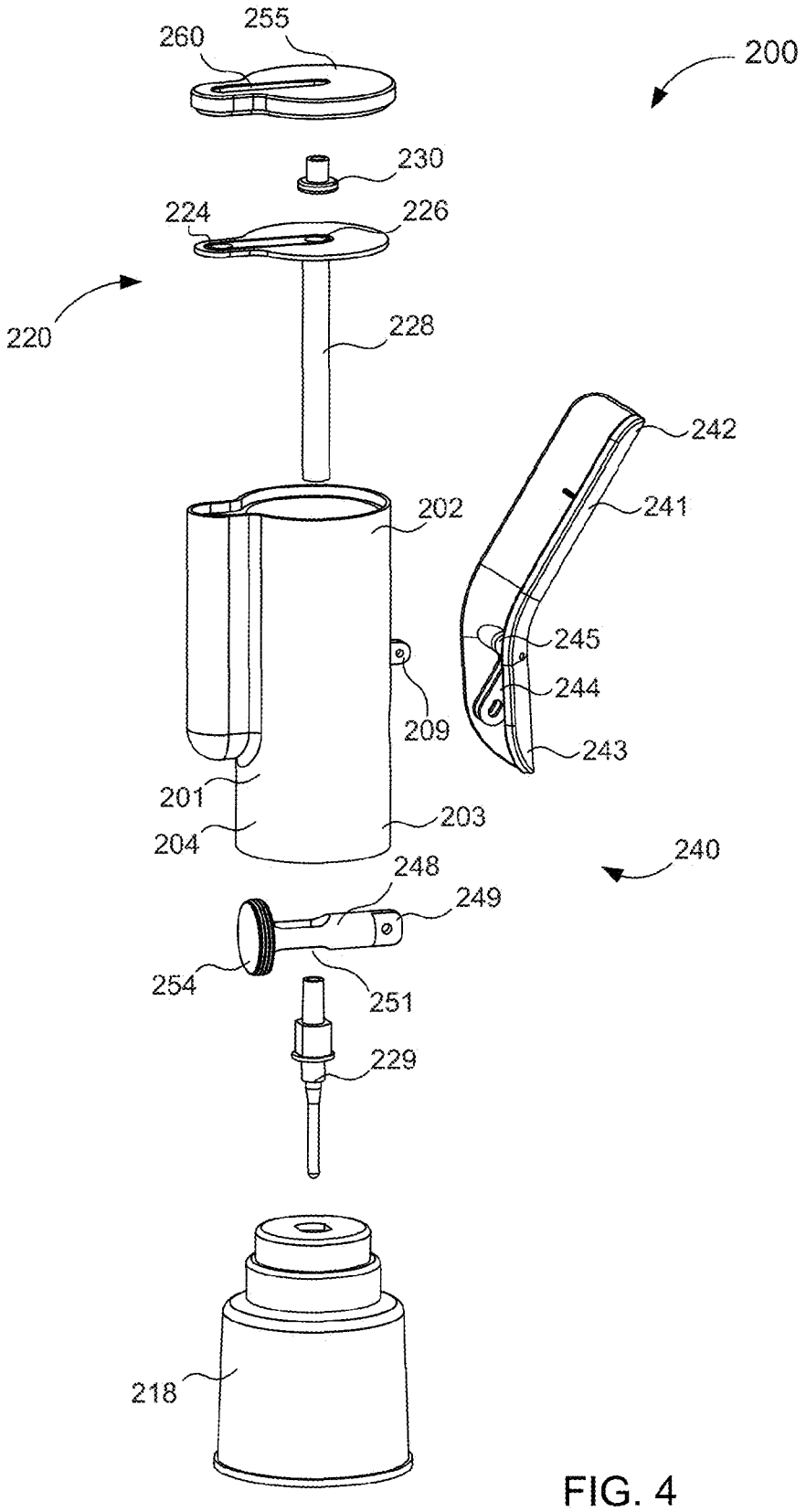
255
260
200
230
224
226
220
228
242
202
241
245
244
209
243
201
203
204
240
248
249
254
251
229
218

FIG. 4

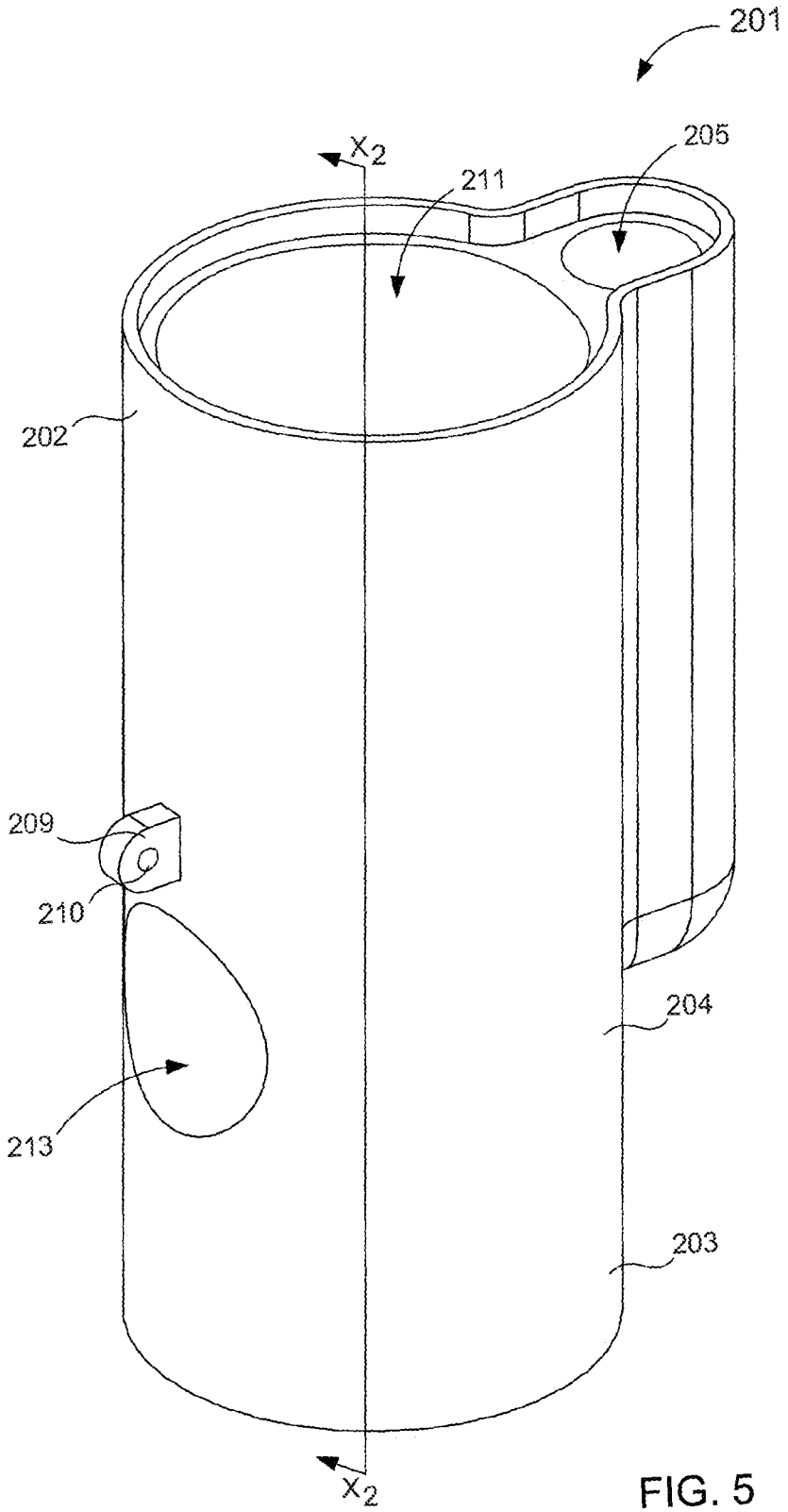

FIG. 5

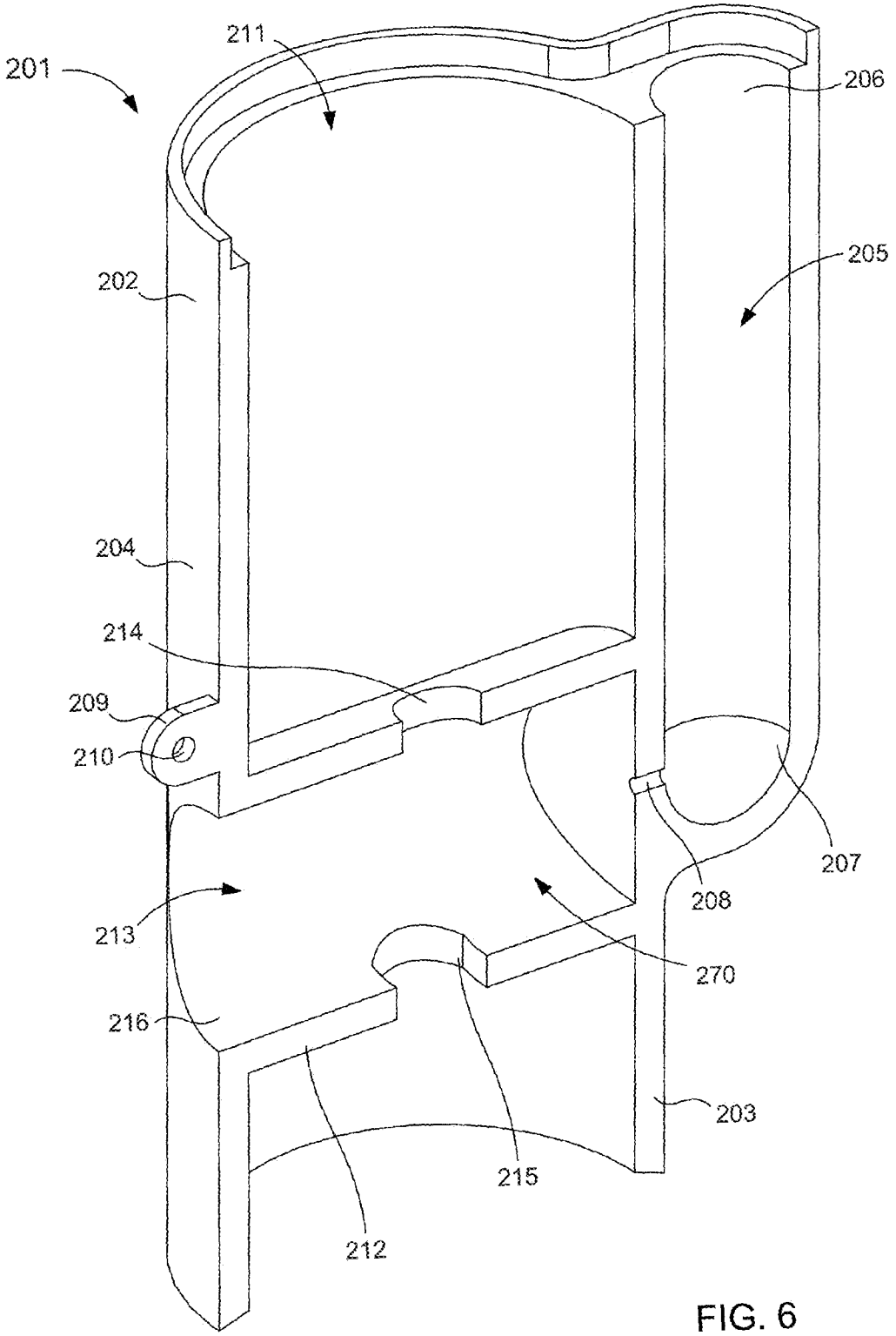
201
211
206
205
202
204
214
209
210
207
208
213
270
216
203
215
212

FIG. 6

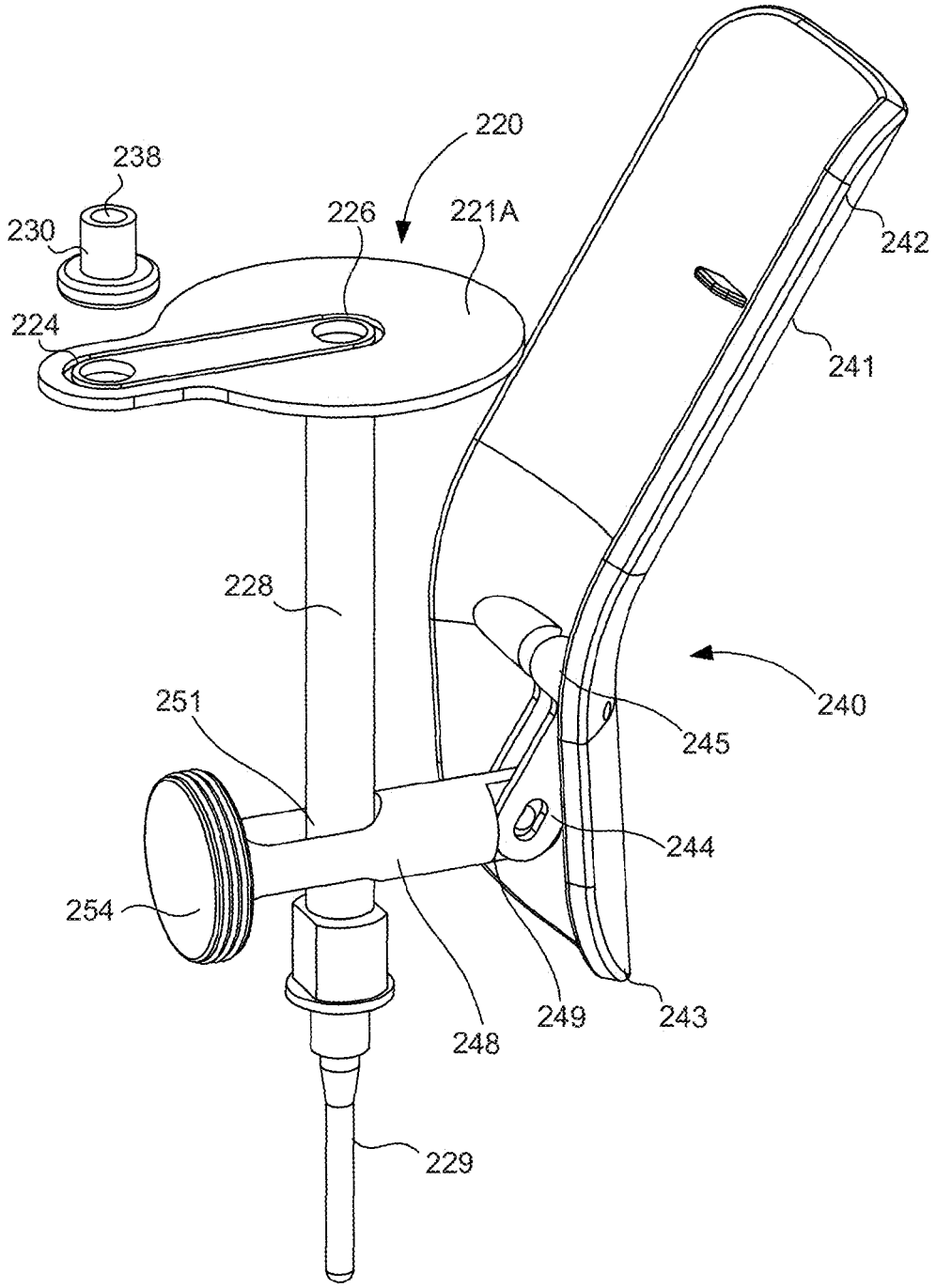
220
238
230
226
221A
242
224
241
228
240
251
245
244
254
249
243
248
229

FIG. 7

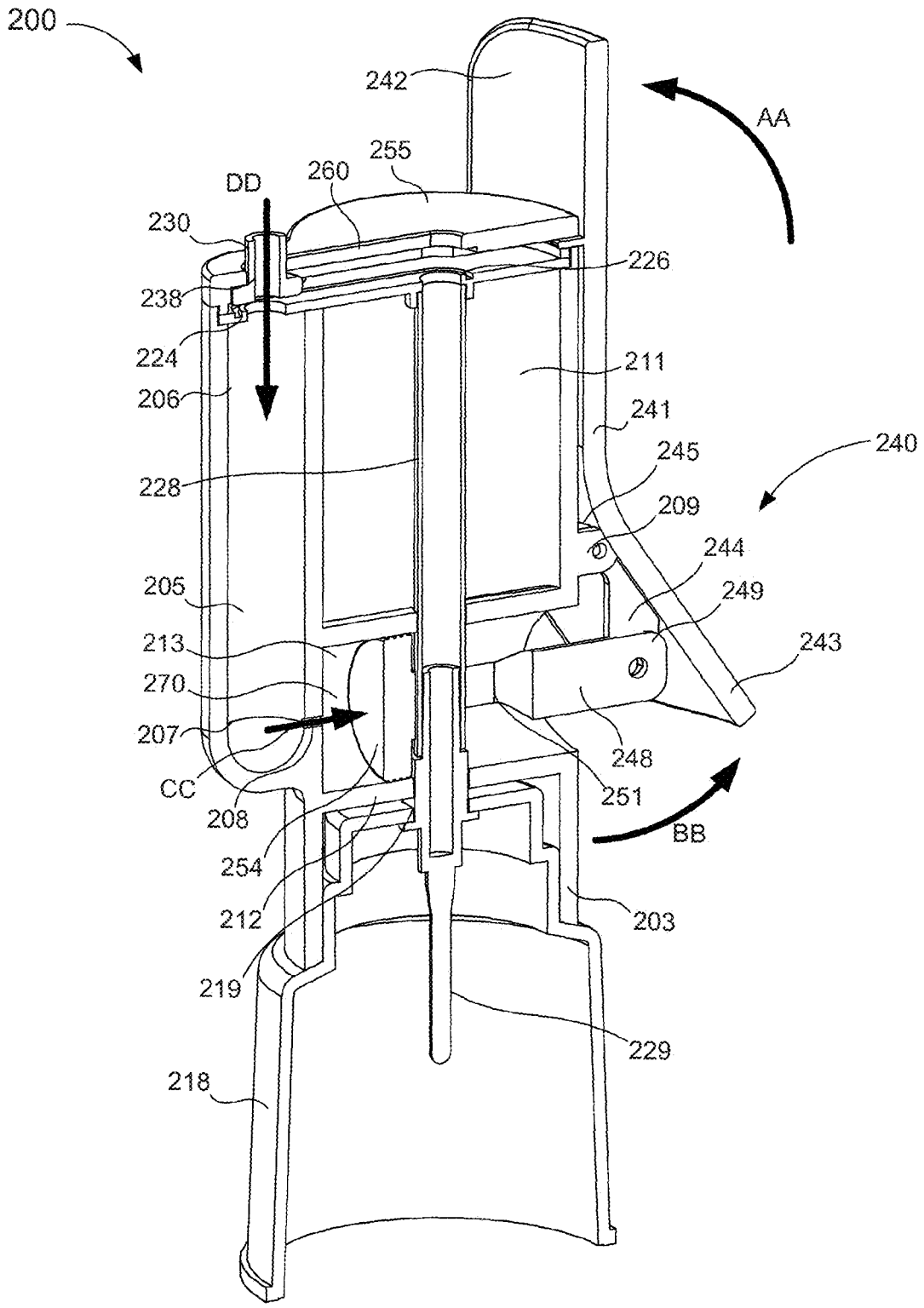
200
242
AA
255
260
DD
230
226
238
224
211
206
241
240
245
228
209
244
205
249
213
243
270
207
248
CC
251
208
BB
254
212
203
219
229
218

FIG. 8

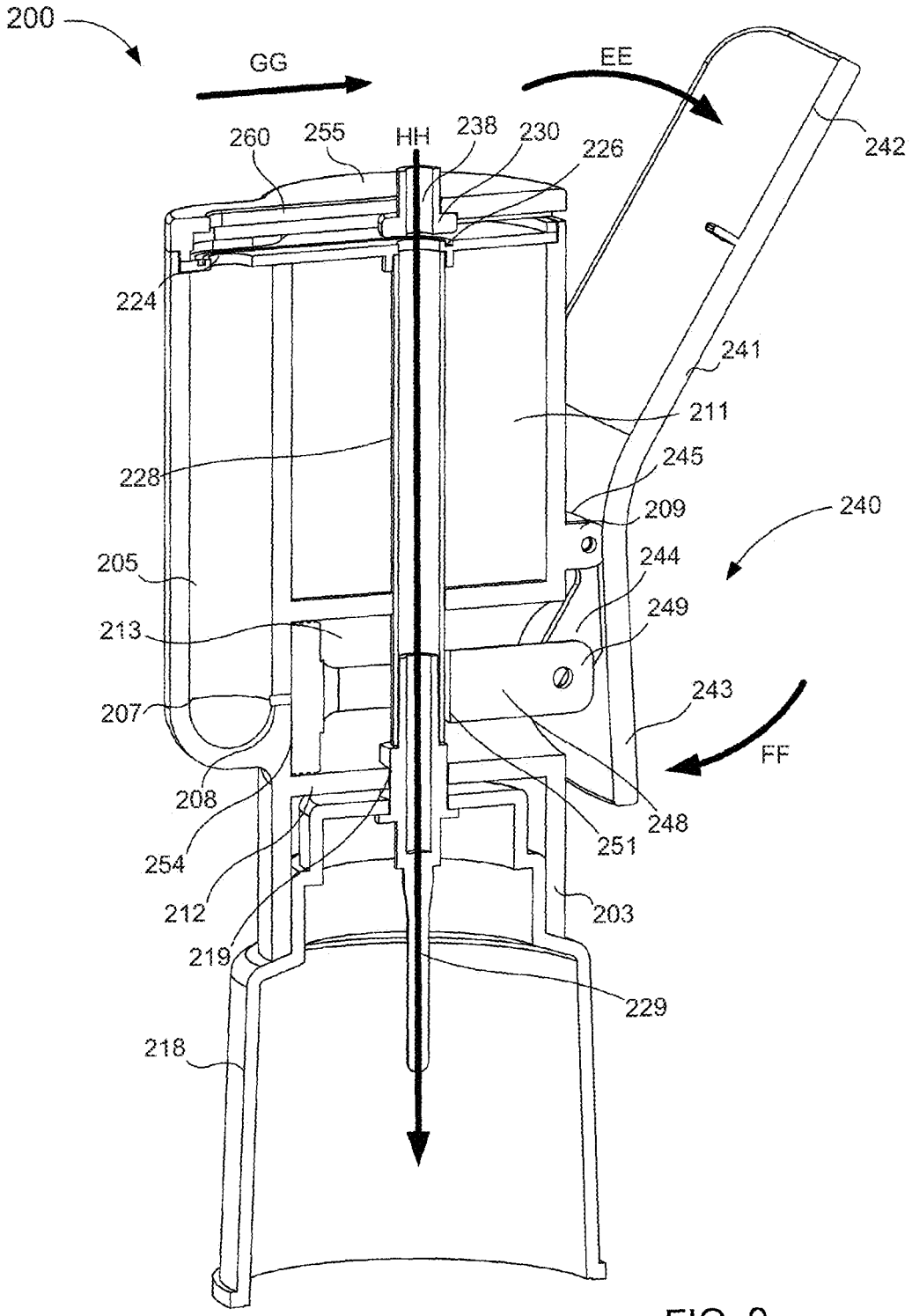
200
GG
EE
260
255
HH
238
230
226
242
224
241
211
228
245
209
240
205
244
249
213
243
207
FF
208
248
251
254
212
203
219
229
218

FIG. 9

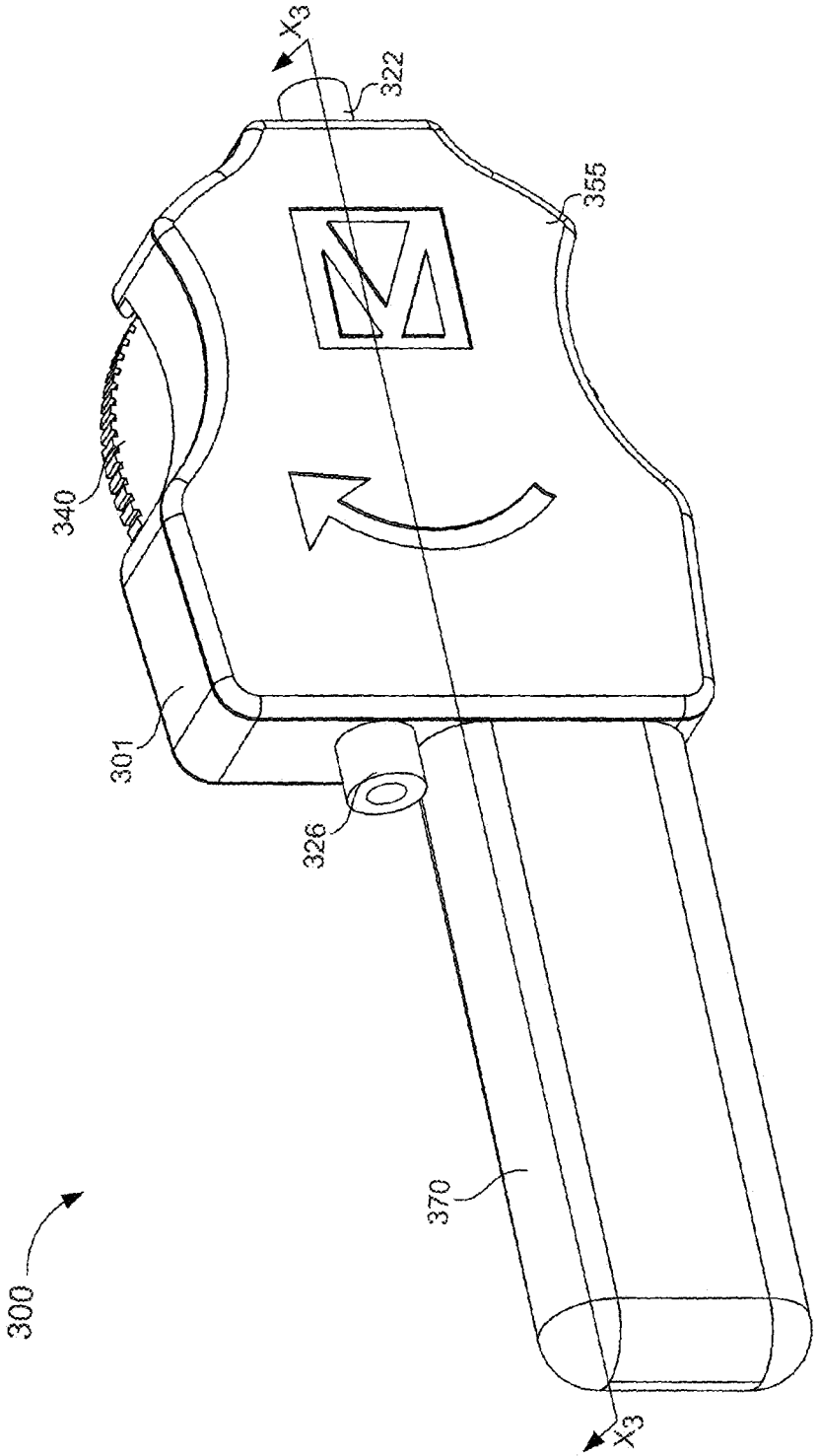

FIG. 10

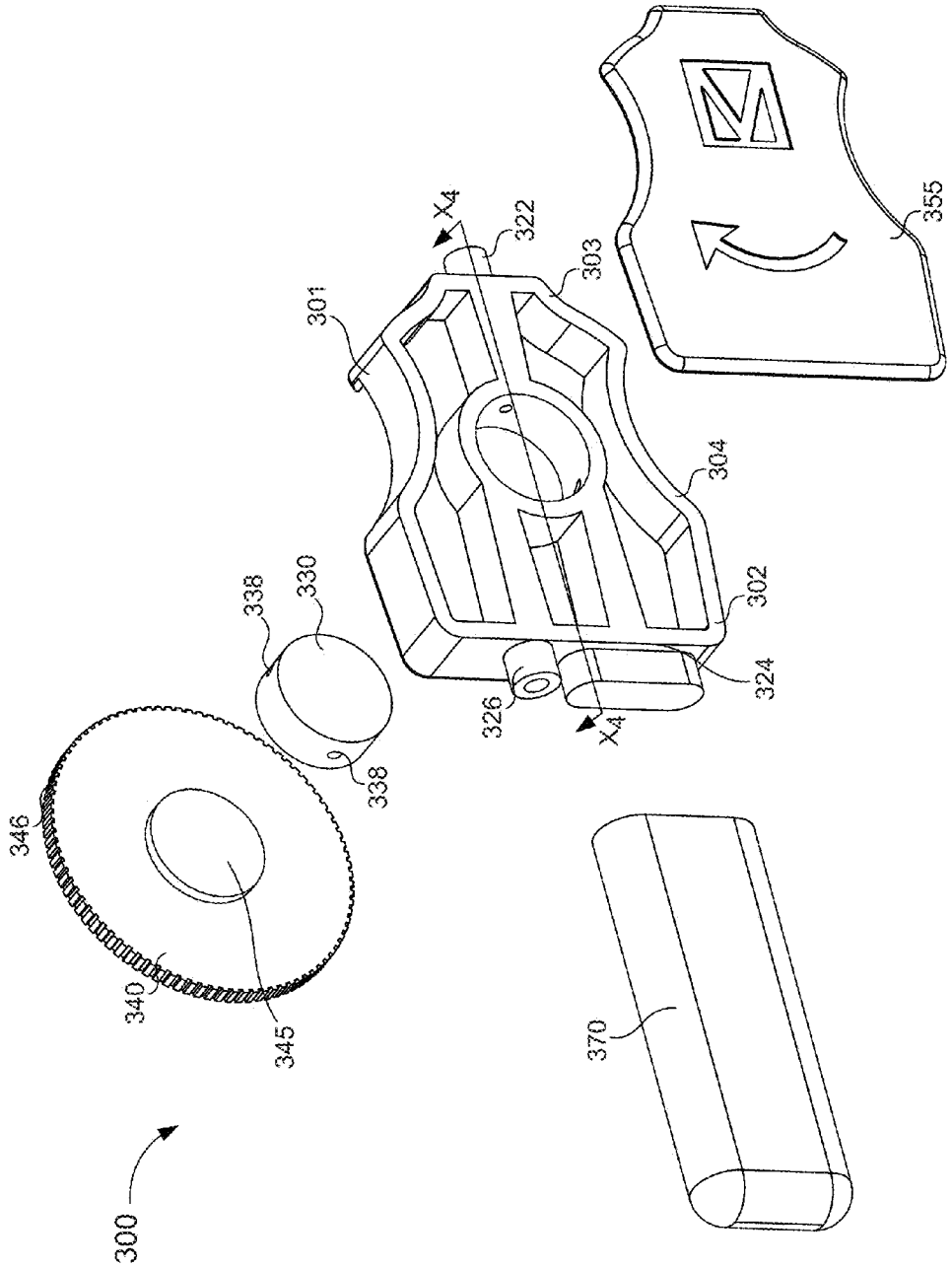
300
301
302
303
304
322
324
326
330
338
338
340
345
346
355
370
X4
X4

FIG. 11

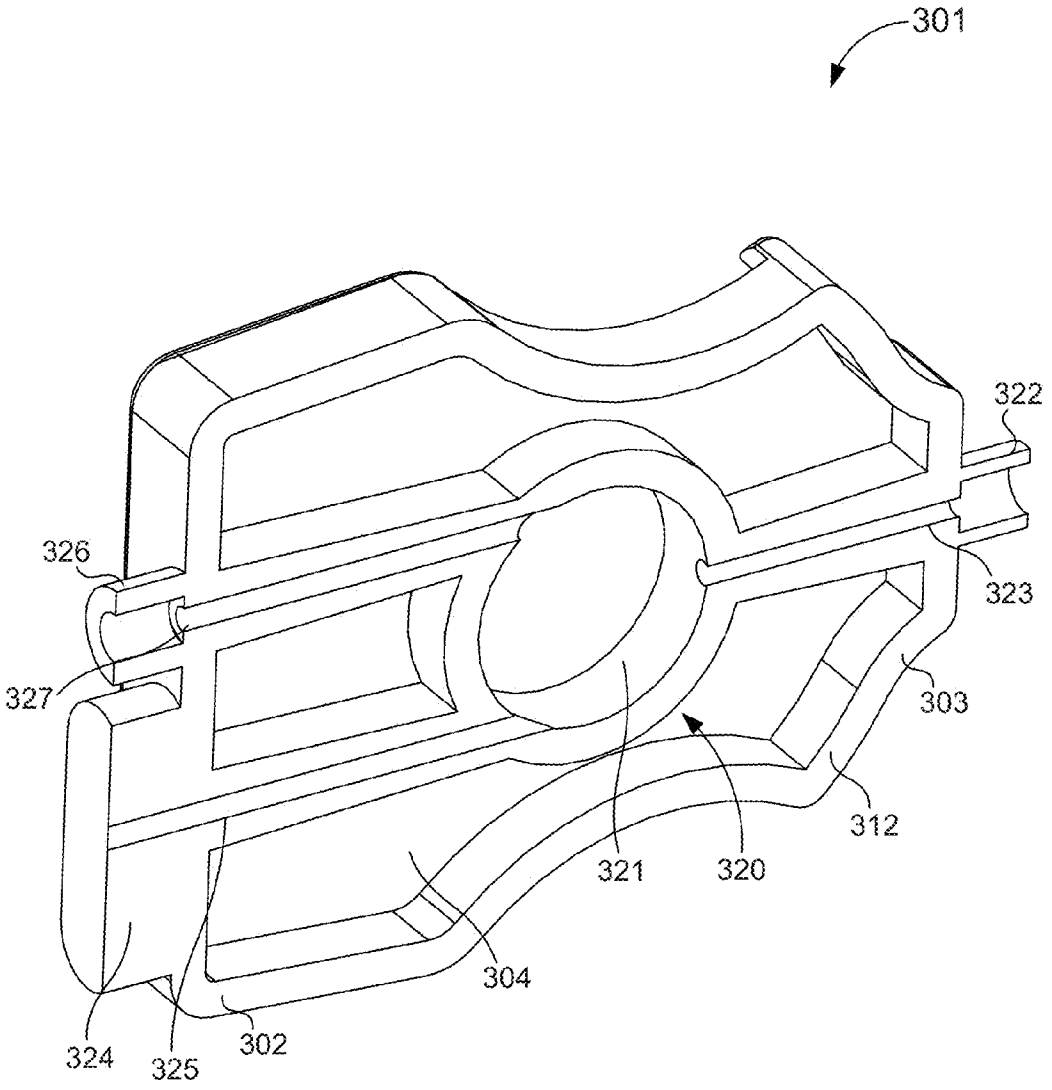

FIG. 12

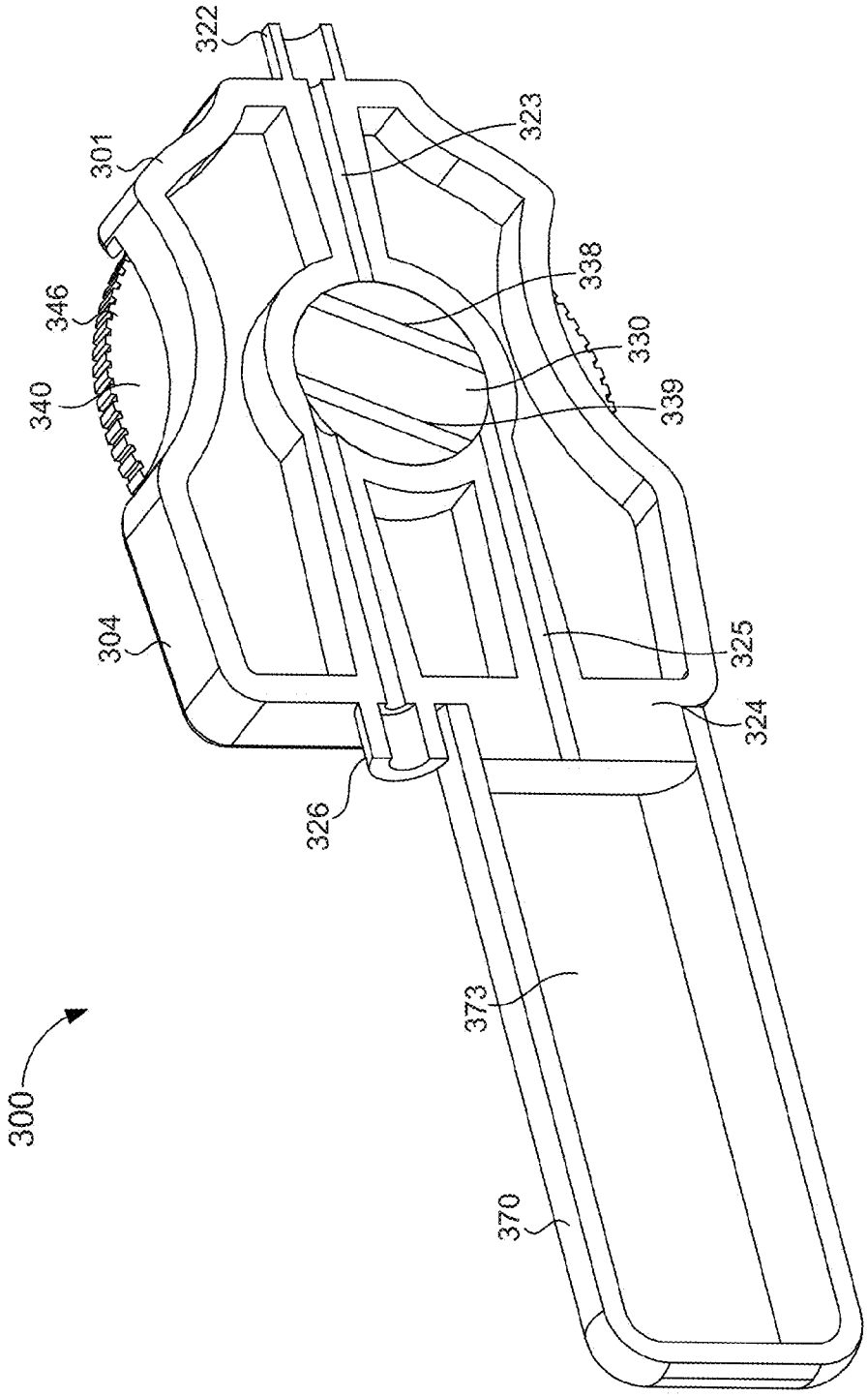

FIG. 13

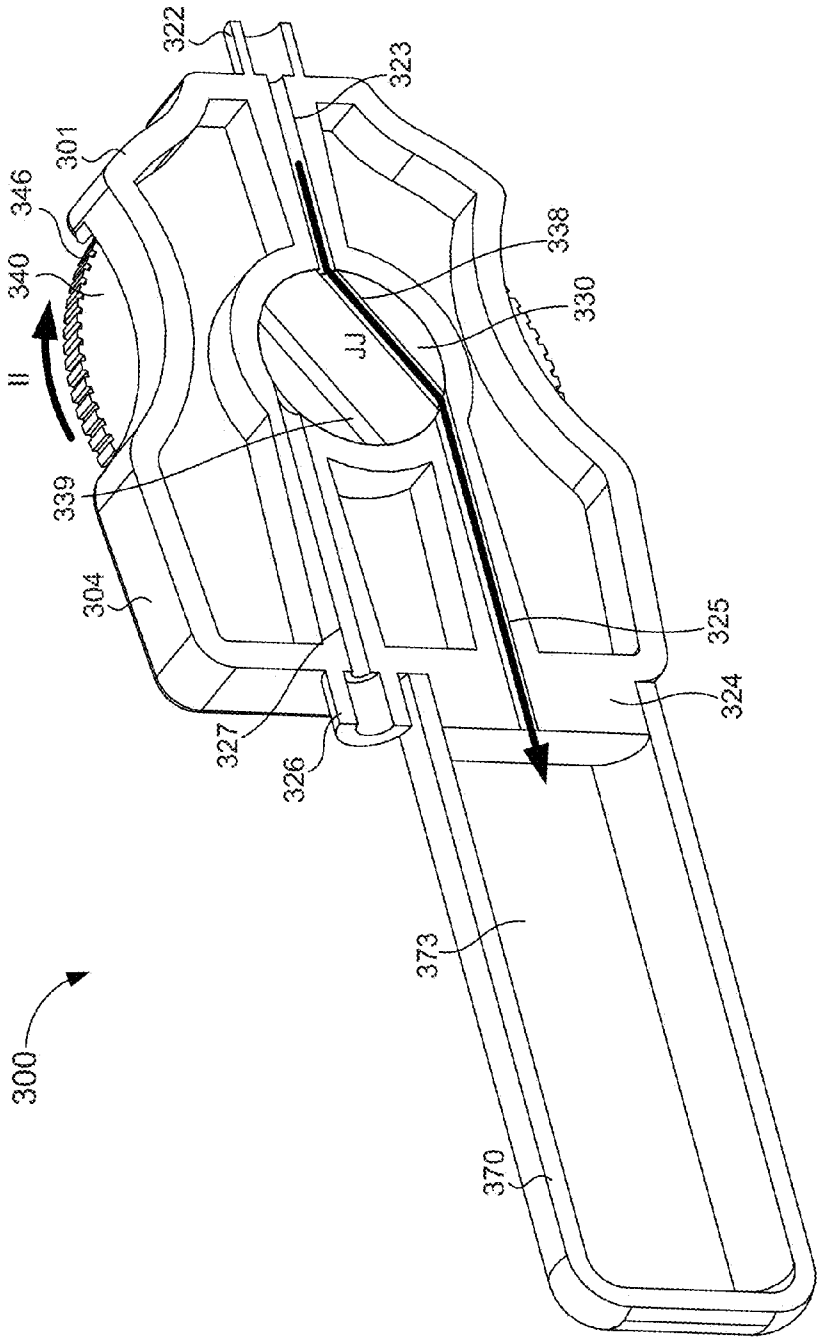
322
323
301
346
340
II
338
330
JJ
339
304
325
324
327
326
373
300
370

FIG. 14

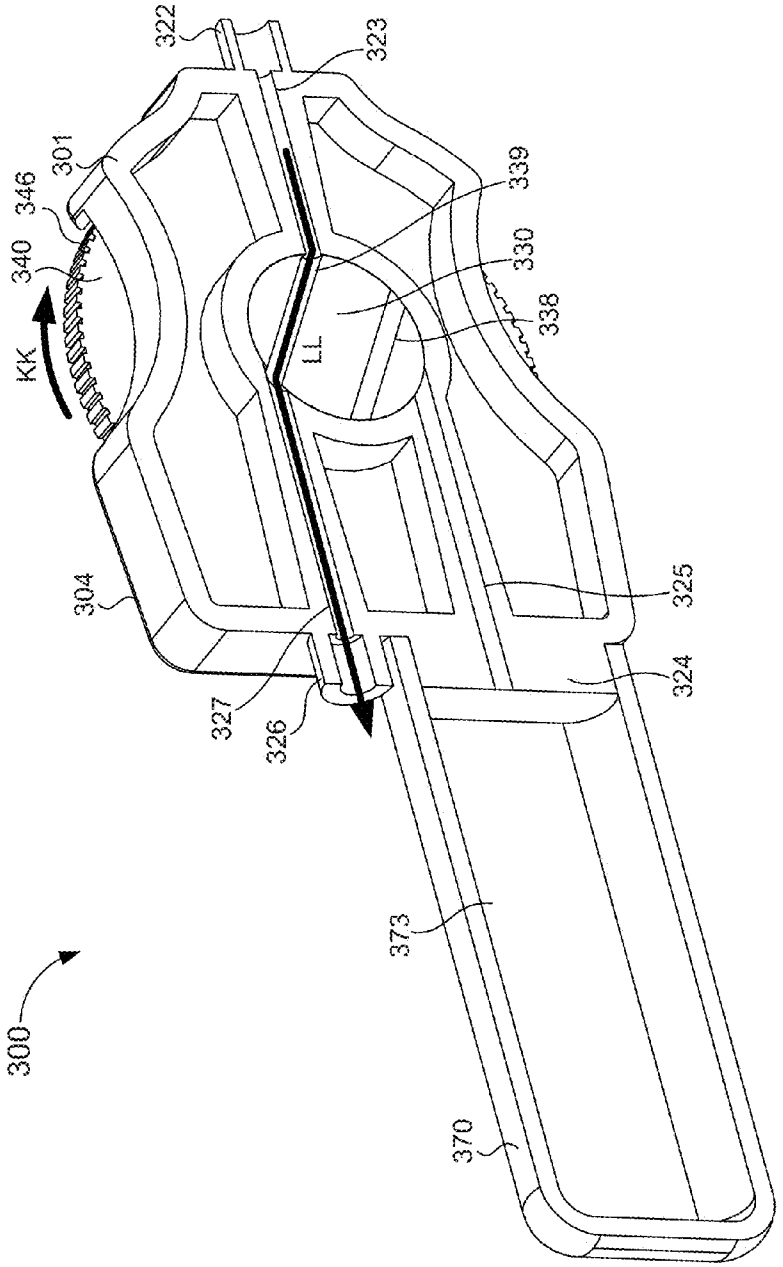
322
323
301
346
340
KK
339
330
338
LL
304
325
327
326
324
373
300
370

FIG. 15

FLUID DIVERSION MECHANISM FOR BODILY-FLUID SAMPLING

CROSS-REFERENCE TO RELATED APPLICATIONS

[0001] This application claims priority to and the benefit of U.S. Provisional Application Ser. No. 61/678,404, entitled, "Fluid Diversion Mechanism for Bodily-Fluid Sampling," filed on Aug. 1, 2012, the disclosure of which is incorporated herein by reference in its entirety.

BACKGROUND

[0002] Embodiments described herein relate generally to the parenteral procurement of bodily-fluid samples, and more particularly to devices and methods for parenterally-procuring bodily-fluid samples with reduced contamination from microbes and/or other contaminants exterior to the bodily-fluid source, such as dermally-residing microbes.

[0003] Health care practitioners routinely perform various types of microbial tests on patients using parenterally-obtained bodily-fluids. In some instances, patient samples (e.g., bodily-fluids) are tested for the presence of one or more potentially undesirable microbes, such as bacteria, fungi, or yeast (e.g., Candida). Microbial testing may include incubating patient samples in one or more sterile vessels containing culture media that is conducive to microbial growth. Generally, when microbes tested for are present in the patient sample, the microbes flourish over time in the culture medium. After a pre-determined amount of time (e.g., a few hours to several days), the culture medium can be tested for the presence of the microbes. The presence of microbes in the culture medium suggests the presence of the same microbes in the patient sample which, in turn, suggests the presence of the same microbes in the bodily-fluid of the patient from which the sample was obtained. Accordingly, when microbes are determined to be present in the culture medium, the patient may be prescribed one or more antibiotics or other treatments specifically designed to treat or otherwise remove the undesired microbes from the patient.

[0004] In some instances, however, patient samples can become contaminated during procurement. For example, contamination of a patient sample may occur by the transfer of microbes from a bodily surface (e.g., dermally-residing microbes) dislodged during needle insertion into a patient and subsequently transferred to a culture medium with the patient sample. The bodily surface microbes may be dislodged either directly or via dislodged tissue fragments, hair follicles, sweat glands and other adnexal structures. The transferred microbes may thrive in the culture medium and eventually yield a positive microbial test result, thereby falsely indicating the presence of such microbes in vivo. Such inaccurate results are a concern when attempting to diagnose or treat a suspected illness or condition. For example, false positive results from microbial tests may result in the patient being unnecessarily subjected to one or more anti-microbial therapies, which may cause serious side effects to the patient including, for example, death, as well as produce an unnecessary burden and expense to the health care system.

[0005] As such, a need exists for improved bodily-fluid transfer devices and methods that reduce microbial contamination in bodily-fluid test samples.

SUMMARY

[0006] Devices for parenterally-procuring bodily-fluid samples with reduced contamination from microbes exterior to the bodily-fluid source, such as dermally-residing microbes, are described herein. In some embodiments, a device includes a pre-sample reservoir, an actuator mechanism, and a diverter. The pre-sample reservoir is configured to be fluidically coupled to a needle to receive and isolate a predetermined volume of bodily-fluid withdrawn from the patient. The actuator mechanism is operably coupled to the pre-sample reservoir such that, when actuated, a negative pressure is formed in the pre-sample reservoir that urges the bodily-fluid to flow into the pre-sample reservoir. The diverter is configured to selectively control fluid flow between the needle and the pre-sample reservoir. The diverter includes a flow control mechanism that defines a first fluid flow path and a second fluid flow path. The diverter is configured to be moved between a first configuration in which the bodily-fluid can flow through the first fluid flow path to the pre-sample reservoir, and a second configuration in which the bodily-fluid can flow through the second fluid flow path to a sample reservoir coupled to the diverter.

BRIEF DESCRIPTION OF THE DRAWINGS

[0007] FIG. **1** is a schematic illustration of a bodily-fluid transfer device according to an embodiment.

[0008] FIG. **2** is a front view of a bodily-fluid transfer device according to an embodiment, in a first configuration.

[0009] FIG. **3** is a side view of the bodily-fluid transfer device of FIG. **2**.

[0010] FIG. **4** is an exploded view of the bodily-fluid transfer device of FIG. **2**.

[0011] FIG. **5** is a perspective view of a housing included in the bodily-fluid transfer device illustrated in FIG. **2**.

[0012] FIG. **6** is a cross-sectional view of the housing illustrated in FIG. **5** taken along the line X_2-X_2.

[0013] FIG. **7** is a perspective view of a diverter and an actuator included in the bodily-fluid transfer device of FIG. **2**.

[0014] FIG. **8** is a cross-sectional view of the bodily-fluid transfer device of FIG. **2** taken along the line X_1-X_1, in a second configuration.

[0015] FIG. **9** is a cross-sectional view of the bodily-fluid transfer device of FIG. **2** taken along the line X_1-X_1, in a third configuration.

[0016] FIG. **10** is a perspective view of the bodily-fluid transfer device according to an embodiment.

[0017] FIG. **11** is an exploded view of the bodily-fluid transfer device of FIG. **10**.

[0018] FIG. **12** is a cross-sectional view of a housing included in the bodily-fluid transfer device of FIG. **10** taken along the line X_4-X_4 in FIG. **11**.

[0019] FIGS. **13-15** are cross-sectional views of the bodily-fluid transfer device taken along the line X_4-X_4 in FIG. **11**, in a first, second, and third configuration, respectively.

DETAILED DESCRIPTION

[0020] Devices for parenterally-procuring bodily-fluid samples with reduced contamination from microbes exterior to the bodily-fluid source, such as dermally-residing microbes, are described herein. In some embodiments, a device includes a pre-sample reservoir, an actuator mechanism, and a diverter. The pre-sample reservoir is configured to be fluidically coupled to a needle to receive and isolate a

predetermined volume of bodily-fluid withdrawn from the patient. The actuator mechanism is operably coupled to the pre-sample reservoir such that, when actuated, a negative pressure is formed in the pre-sample reservoir that urges the bodily-fluid to flow into the pre-sample reservoir. The diverter is configured to selectively control fluid flow between the needle and the pre-sample reservoir. The diverter includes a flow control mechanism that defines a first fluid flow path and a second fluid flow path. The diverter is configured to be moved between a first configuration in which the bodily-fluid can flow through the first fluid flow path to the pre-sample reservoir, and a second configuration in which the bodily-fluid can flow through the second fluid flow path to a sample reservoir coupled to the diverter.

[0021] In some embodiments, a method for procuring bodily-fluid samples from a patient using a parenterally sampling device that includes an actuation mechanism, a flow control mechanism and a pre-sample reservoir includes establishing fluid communication between a patient and the pre-sample reservoir. A first volume of bodily-fluid is withdrawn by moving the actuation mechanism from a first position to a second position to create a negative pressure in the pre-sample reservoir. The flow control mechanism is moved from a first configuration in which bodily-fluid is allowed to flow through a first flow path from the patient to the pre-sample reservoir to a second configuration in which bodily-fluid is allowed to flow through a second flow path from the patient to a sample reservoir.

[0022] In some embodiments, a bodily-fluid sampling device includes a pre-sample reservoir, a diverter mechanism, and an actuator. The pre-sample reservoir is configured to be fluidically coupled to a needle. The pre-sample is configured to have a negative pressure and configured to receive and isolate a predetermined volume of bodily-fluid withdrawn from a patient, via the needle. The diverter mechanism is configured to be fluidically coupled to the pre-sample reservoir. The diverter mechanism includes a flow control mechanism configured for rotational movement between a first configuration in which the flow control mechanism and the diverter mechanism collectively define a first fluid flow path between the needle and the pre-sample reservoir and a second configuration in which the flow control mechanism and the diverter mechanism collectively define a second fluid flow path between the needle and a sample reservoir operably coupled to the diverter mechanism. The actuator is rotatably coupled to the diverter mechanism and configured to be rotated from a first position, wherein the flow control mechanism is in the first configuration, to a second position, wherein the flow control mechanism is in the second configuration.

[0023] In some embodiments, a method for procuring bodily-fluid samples from a patient using a parenterally sampling device that has a flow control mechanism and an integrated pre-sample reservoir having a negative pressure includes inserting a needle into the patient while the flow control mechanism is in a first configuration. The first configuration of the flow control mechanism is operable in preventing bodily-fluid from flowing from the patient to the integrated pre-sample reservoir. The flow control mechanism is moved from the first configuration to a second configuration. The second configuration of the flow control mechanism is operable in allowing bodily-fluid to flow through a first flow path defined at least in part by the flow control mechanism to the pre-sample reservoir. After a predetermined volume of bodily-fluid has been received in the pre-sample reservoir, the method includes moving the flow control mechanism from the second configuration to a third configuration. The third configuration of the flow control mechanism is operable in allowing bodily-fluid to flow through a second flow path defined at least in part by the flow control mechanism to a sample reservoir.

[0024] In some embodiments, an apparatus includes a diverter, a flow control mechanism, and an actuator mechanism. The diverter defines an inlet port, a first outlet port, and a second outlet port. The first outlet port is fluidically coupled to a first fluid reservoir and the second outlet port is fluidically coupled to a second reservoir, fluidically isolated from the first fluid reservoir. The flow control mechanism is configured to be operably coupled to the diverter. In use, the flow control mechanism is moved between a first configuration, in which a flow of bodily-fluid can enter the first fluid reservoir, and a second configuration, in which a flow of bodily-fluid can enter the second fluid reservoir.

[0025] In some embodiments, a bodily-fluid transfer device can be configured to selectively divert a first, predetermined amount of a flow of a bodily-fluid to a first reservoir before permitting the flow of a second amount of the bodily-fluid into a second reservoir. In this manner, the second amount of bodily-fluid can be used for diagnostic or other testing, while the first amount of bodily-fluid, which may contain microbes from a bodily surface, is isolated from the second amount of the bodily-fluid. The first amount of bodily fluid can be discarded or used for non-culture tests, such as one or more biochemical tests, blood counts, immunodiagnostic tests, cancer-cell detection tests, and the like where microbes from a bodily surface do not affect the test results.

[0026] As used in this specification and the appended claims, "bodily-fluid" can include any fluid obtained from a body of a patient, including, but not limited to, blood, cerebrospinal fluid, urine, bile, lymph, saliva, synovial fluid, serous fluid, pleural fluid, amniotic fluid, and the like, or any combination thereof.

[0027] As used herein, the term "set" can refer to multiple features or a singular feature with multiple parts. For example, when referring to set of walls, the set of walls can be considered as one wall with distinct portions, or the set of walls can be considered as multiple walls. Similarly stated, a monolithically constructed item can include a set of walls. Such a set of walls can include, for example, multiple portions that are discontinuous from each other. A set of walls can also be fabricated from multiple items that are produced separately and later joined together (e.g., via a weld, an adhesive or any suitable method).

[0028] As used herein, the words "proximal" and "distal" refer to the direction closer to and away from, respectively, a user who would place the device into contact with a patient. Thus, for example, the end of a device first touching the body of the patient would be the distal end, while the opposite end of the device (e.g., the end of the device being manipulated by the user) would be the proximal end of the device.

[0029] FIG. **1** is a schematic illustration of a portion of a bodily-fluid transfer device **100**, according to an embodiment. Generally, the bodily-fluid transfer device **100** (also referred to herein as "fluid transfer device" or "transfer device") is configured to permit the withdrawal of bodily-fluid from a patient such that a first portion, amount, or volume of the withdrawn fluid is diverted away from a second portion, amount, or volume of the withdrawn fluid that is to be used as a biological sample, such as for testing for the purpose

of medical diagnosis and/or treatment where contamination from microbes or other contaminants exterior to the bodily-fluid source (e.g., dermally-residing microbes) can affect test results. In other words, the transfer device **100** is configured to transfer a first, predetermined amount of a bodily-fluid to a first collection reservoir and a second amount of bodily-fluid to one or more bodily-fluid collection reservoirs that are fluidically isolated from the first collection reservoir, as described in more detail herein.

[0030] The transfer device **100** includes a diverter **120**, a first reservoir **170**, and a second reservoir **180**, fluidically isolated from the first reservoir **170**. The diverter **120** includes an inlet port **122** and two or more outlet ports, such as a first outlet port **124** and a second outlet port **126**, as shown in FIG. **1**. The inlet port **122** is configured to be fluidically coupled to a medical device defining a pathway P for withdrawing and/or conveying the bodily-fluid from the patient to the transfer device **100**. For example, the inlet port **122** can be fluidically coupled to a needle, a fluid deliver member, or other lumen-containing device (e.g., flexible sterile tubing). In this manner, the diverter **120** can receive the bodily-fluid from the patient via the needle, other lumen-containing devices (e.g., cannula, catheters, etc.), or any other device suitable for collection of bodily-fluid samples from a patient.

[0031] The first outlet port **124** of the diverter **120** is configured to be fluidically coupled to the first reservoir **170**. In some embodiments, the first reservoir **170** is monolithically formed with the first outlet port **124** and/or a portion of the diverter **120**. In other embodiments, the first reservoir **170** can be mechanically and fluidically coupled to the diverter **120** via an adhesive, a resistance fit, a mechanical fastener, any number of mating recesses, a threaded coupling, and/or any other suitable coupling or combination thereof. Similarly stated, the first reservoir **170** can be physically (e.g., mechanically) coupled to the diverter **120** such that an interior volume defined by the first reservoir **170** is in fluid communication with the first outlet port **124** of the diverter **120**. In still other embodiments, the first reservoir **170** can be operably coupled to the first outlet port **124** of the diverter **120** via an intervening structure (not shown in FIG. **1**), such as a flexible sterile tubing. More particularly, the intervening structure can define a lumen configured to place the first reservoir **170** in fluid communication with the first outlet port **124**.

[0032] The first reservoir **170** is configured to receive and contain the first, predetermined amount of the bodily-fluid. In some embodiments, the first reservoir **170** is configured to contain the first amount of the bodily-fluid such that the first amount is fluidically isolated from a second amount of the bodily-fluid that is subsequently withdrawn from the patient. The first reservoir **170** can be any suitable reservoir for containing a bodily-fluid, such as a pre-sample reservoir described in detail in U.S. Patent Publication No. 2008/0145933 ("the '933 Publication"), the disclosure of which is incorporated herein by reference in its entirety. For example, the first reservoir can be an evacuated sample tube (e.g., BD Vacutainer®) of sufficient size to collect the first amount of bodily fluid. As used in this specification, the terms "first, predetermined amount" and "first amount" describe an amount of bodily-fluid configured to be received or contained by the first reservoir **170**. Furthermore, while the term "first amount" does not explicitly describe a predetermined amount, it should be understood that the first amount is the first, predetermined amount unless explicitly described differently.

[0033] The second outlet port **126** of the diverter **120** is configured to be fluidically coupled to the second reservoir **180**. In some embodiments, the second reservoir **180** is monolithically formed with the second outlet port **126** and/or a portion of the diverter **120**. In other embodiments, the second reservoir **180** can be mechanically coupled to the second outlet port **126** of the diverter **120** or operably coupled to the second outlet port **126** via an intervening structure (not shown in FIG. **1**), such as described above with reference to the first reservoir **170**. The second reservoir **180** is configured to receive and contain the second amount of the bodily-fluid. For example, the second amount of bodily-fluid can be an amount withdrawn from the patient subsequent to withdrawal of the first amount. In some embodiments, the second reservoir **180** is configured to contain the second amount of the bodily-fluid such that the second amount is fluidically isolated from the first amount of the bodily-fluid.

[0034] The second reservoir **180** can be any suitable reservoir for containing a bodily-fluid, including, for example, a sample reservoir as described in the '933 Publication incorporated by reference above. As used in this specification, the term "second amount" describes an amount of bodily-fluid configured to be received or contained by the second reservoir **180**. In some embodiments, the second amount can be any suitable amount of bodily-fluid and need not be predetermined. In other embodiments, the second amount received and contained by the second reservoir **180** is a second, predetermined amount.

[0035] In some embodiments, the first reservoir **170** and the second reservoir **180** can be coupled to (or formed with) the diverter **120** in a similar manner. In other embodiments, the first reservoir **170** and the second reservoir **180** need not be similarly coupled to the diverter **120**. For example, in some embodiments, the first reservoir **170** can be monolithically formed with the diverter **120** (e.g., the first outlet port **124**) and the second reservoir **180** can be operably coupled to the diverter **120** (e.g., the second outlet port **126**) via an intervening structure, such as a flexible sterile tubing. In other embodiments, the first reservoir **170** can be monolithically formed with the diverter **120** and the second fluid reservoir **180** can be removably coupled to the diverter **120**.

[0036] As shown in FIG. **1**, the transfer device **100** further includes an actuator **140** and a flow control mechanism **130** first lumen **138** second lumen **139**. In some embodiments, the actuator **140** can be included in or otherwise operably coupled to the diverter **120**. In this manner, the actuator **140** can be configured to control a movement of the flow control mechanism **130** (e.g., between a first configuration and a second configuration). For example, the actuator **140** can be movable between a first position corresponding to the first configuration of the flow control mechanism **130**, and a second position, different than the first position, corresponding to the second configuration of the flow control mechanism **130**. In some embodiments, the actuator **140** is configured for uni-directional movement. For example, the actuator **140** can be moved from its first position to its second position, but cannot be moved from its second position to its first position. In this manner, the flow control mechanism **130** is prevented from being moved to its second configuration before its first configuration, thus requiring that the first amount of the bodily-fluid be directed to the first reservoir **170** and not the second reservoir **180**, as described in further detail herein.

[0037] The flow control mechanism **130** defines a first lumen **138** and a second lumen **139**. The flow control mecha-

nism **130** is configured such that when in the first configuration, the first lumen **138** fluidically couples the inlet port **122** to the first outlet port **124** and when in the second configuration, the second lumen **139** fluidically couples the inlet port **122** to the second outlet port **126**. Said another way, when in the first configuration, the first lumen **138** defines at least a portion of a first fluid flow path between the inlet port **122** and the first outlet port **124**, and when in the second configuration, the second lumen **139** defines at least a portion of a second fluid flow path between the inlet port **122** and the second outlet port **126**. In some embodiments, the actuator **140** is coupled to the flow control mechanism **130** and is configured to move the flow control mechanism **130** in a translational motion between the first configuration and the second configuration. For example, in some embodiments, the flow control mechanism **130** can be in the first configuration when the flow control mechanism **130** is in a distal position relative to the transfer device **100**. In such embodiments, the actuator **140** can be actuated to move the flow control device **130** in the proximal direction to a proximal position relative to the transfer device **100**, thereby placing the flow control mechanism **130** in the second configuration. In other embodiments, the actuator **140** can be actuated to move the flow control mechanism **130** in a rotational motion between the first configuration and the second configuration.

[0038] Accordingly, when the flow control mechanism **130** is in the first configuration, the second outlet port **126** is fluidically isolated from the inlet port **122**. Similarly, when the flow control mechanism **130** is in the second configuration, the first outlet port **124** is fluidically isolated from the inlet port **122**. In this manner, the flow control mechanism **130** can direct, or divert the first amount of the bodily-fluid to the first reservoir **170** via the first outlet port **124** when the flow control mechanism **130** is in the first configuration and can direct, or divert the second amount of the bodily-fluid to the second reservoir **180** via the second outlet port **126** when the flow control mechanism **130** is in the second configuration.

[0039] In some embodiments, at least a portion of the actuator **140** can be operably coupled to the first reservoir **170**. In this manner, the actuator **140** (or at least the portion of the actuator **140**) can be configured to introduce or otherwise facilitate the development of a vacuum within the first reservoir **170**, thereby initiating flow of the bodily-fluid through the transfer device **100** and into the first reservoir **170** when the diverter **120** is in its first configuration. The actuator **140** can include any suitable mechanism for actuating the transfer device **100** (e.g., at least the flow control mechanism **130**) such as, for example, a rotating disc, a plunger, a slide, a dial, a button, a handle, a lever, and/or any other suitable mechanism or combination thereof. Examples of suitable actuators are described in more detail herein with reference to specific embodiments.

[0040] In some embodiments, the diverter **120** can be configured such that the first amount of bodily-fluid need be conveyed to the first reservoir **170** before the diverter **120** will permit the flow of the second amount of bodily-fluid to be conveyed through the diverter **120** to the second reservoir **180**. In this manner, the diverter **120** can be characterized as requiring compliance by a health care practitioner regarding the collection of the first, predetermined amount (e.g., a pre-sample) prior to a collection of the second amount (e.g., a sample) of bodily-fluid. Similarly stated, the diverter **120** can be configured to prevent a health care practitioner from collecting the second amount, or the sample, of bodily-fluid into the second reservoir **180** without first diverting the first amount, or pre-sample, of bodily-fluid to the first reservoir **170**. In this manner, the health care practitioner is prevented from including (whether intentionally or unintentionally) the first amount of bodily-fluid, which is more likely to contain bodily surface microbes (for example, dermally-residing microbes), in the bodily-fluid sample to be used for analysis. In other embodiments, the fluid transfer device **100** need not include a forced-compliance feature or component.

[0041] In some embodiments, the actuator **140** can have a third position, different than the first and second positions, which can correspond to a third configuration of the flow control mechanism **130**. When in the third configuration, the flow control mechanism **130** can fluidically isolate the inlet port **122** from both the first outlet port **124** and the second outlet port **126** simultaneously. Therefore, when the flow control mechanism **130** is in its third configuration, flow of bodily-fluid from the inlet port **122** to either the first reservoir **170** or the second reservoir **180** is prevented. In use, for example, the actuator **140** can be actuated to place the flow control mechanism **130** in the first configuration such that a bodily-fluid can flow from the inlet port **122** to the first reservoir **170**, then moved to the second configuration such that the bodily-fluid can flow from the inlet port **122** to the second reservoir **180**, then moved to the third configuration to stop the flow of bodily-fluid into and/or through the diverter **120**. In some embodiments, the flow control mechanism **130** can be moved to the third configuration between the first configuration and the second configuration. In some embodiments, the flow control mechanism **130** can be in the third configuration before being moved to either of the first configuration or the second configuration. In some embodiments, the flow control mechanism **130** can be moved between four configurations. For example, the flow control mechanism **130** can be disposed in the third configuration and moved through the first configuration and second configuration to the fourth configuration. In such embodiments, the fourth configuration can function similarly to the third configuration to fluidically isolate the inlet port **122** from the first outlet port **124** and the second outlet portion **126**.

[0042] In some embodiments, one or more portions of the transfer device **100** are disposed within a housing (not shown in FIG. **1**). For example, in some embodiments, at least a portion of one or more of the diverter **120**, the first reservoir **170**, and the actuator **140** can be disposed within the housing. In such an embodiment, at least a portion of the actuator **140** is accessible through the housing. Examples of suitable housings are described in more detail herein with reference to specific embodiments.

[0043] FIGS. **2-9** illustrate a transfer device **200** according to an embodiment. The transfer device **200** includes a housing **201**, a diverter **220**, and an actuator **240**. The transfer device **200** can be any suitable shape, size, or configuration. For example, while shown in FIGS. **2** and **3** as being substantially cylindrical, the transfer device **200** can be square, rectangular, polygonal, and/or any other non-cylindrical shape.

[0044] The housing **201** includes a proximal end portion **202**, a distal end portion **203**, a first set of walls **204**, and a second set of wall **212** (also referred to herein as "inner walls" **212**). The distal end portion **203** of the housing **201** is coupled to a container shroud **218** configured to receive at least a portion of an external fluid reservoir (not shown in FIGS. **2-9**). The container shroud **218** can be coupled to the housing **201** in any suitable manner. For example, in some embodi-

ments, a portion of the container shroud **218** can form a friction fit within a portion of the housing **201**. In some embodiments, the container shroud **218** can be coupled to the housing **201** via a threaded coupling, an adhesive, a snap fit, a mechanical fastener and/or any other suitable coupling method. In other embodiments, the container shroud **218** is monolithically formed with the housing **201**. The container shroud **218** is configured to house a portion of an outlet adapter **229** (FIG. **4**) such that when the external fluid reservoir is disposed within the container shroud **218**, the external reservoir can be placed in fluid communication with the outlet adapter **229**, as described in further detail herein.

[0045] The proximal end portion **202** of the housing **201** receives the diverter **220** and is coupled to a cap **255**. The cap **255** is configured to substantially enclose a portion of the housing **201** (see for example, the exploded view of FIG. **3**). Similarly stated, the cap **255** is coupled to the proximal end portion **202** of the housing **201** such that the proximal end portion **202** is substantially closed.

[0046] As shown in FIG. **5**, the walls **204** include a pivot protrusion **209** configured to extend substantially perpendicularly from an outer surface of the walls **204**. The pivot protrusion **209** defines an aperture **210** and is configured to receive a portion of the actuator **240** to pivotally couple the actuator **240** to the housing **201**. As shown in FIG. **6**, the walls **204** define an inner volume **211** and a bypass chamber **205**. The bypass chamber **205** includes a first end portion **206** and a second end portion **207**. More specifically, the first end portion **206** is disposed at the proximal end portion **202** of the housing **201** and is substantially open such that a bodily-fluid can flow through the first end portion **206** and into the bypass chamber **205**. The second end portion **207** defines a lumen **208** configured to place the bypass chamber **205** in fluid communication with a volume of the housing **201** substantially outside of the bypass chamber **205**.

[0047] The inner walls **212** extend from an inner surface of the walls **204** of the housing **201** to substantially traverse a portion of the inner volume **211**. More specifically, the inner walls **212** are substantially annular and define a plunger volume **213** therebetween. The inner walls **212** also define a first opening **214** and a second opening **215**. The first opening **214** and the second opening **215** are configured to receive a portion of the diverter **220**, such that the portion of the diverter **220** can extend substantially continuously from the proximal end portion **202** of the housing **201** to the distal end portion **203** of the housing **201**. In this manner, the portion of the diverter **220** can transfer a bodily-fluid through the housing **201** to an external reservoir while fluidically isolating the bodily-fluid from a volume substantially outside the portion of the diverter **220**, as further described herein.

[0048] As shown in FIGS. **5** and **6**, the plunger volume **213** is configured to extend through a portion of the walls **204** of the housing **201** such that the plunger volume **213** is open to a volume substantially outside of the housing **201**. Similarly stated, the walls **204** define an opening **216** configured to be disposed relative to the inner walls **212** to substantially align the opening **216** with a first end of the plunger volume **213**. The arrangement of the inner walls **212** relative to the housing **201** is such that the opening **216** and the plunger volume **213** are defined in a distal position relative to the pivot protrusion **209**, as further described herein. In addition, the inner walls **212** are configured such that a second end of the plunger volume **213**, opposite the first end, is in fluid communication with the lumen **208** of the bypass chamber **205**. Thus, at least a portion of the plunger volume **213** and at least a portion of the bypass chamber **205** can define a fluid reservoir **270** configured to receive a flow of bodily-fluid, as described in further detail herein.

[0049] Referring to FIG. **7**, the diverter **220** includes a diverter plate **221**A, flow control mechanism **230***a* transfer tube **228**, the outlet adapter **229**, and a flow control mechanism **230** (also referred to herein as "inlet port"). The diverter plate **221**A is configured to engage a surface of the proximal end portion **202** of the housing **201** to retain the diverter plate **221**A relative to the housing **201**. For example, in some embodiments, the proximal end portion **202** of the housing **201** can include a flange configured to receive a portion of the diverter plate **221**A. In some embodiments, the diverter plate **221**A can form a friction fit with an inner surface of the walls **204** of the housing **201**, thereby coupling the diverter plate **221**A to the housing **201**. In such embodiments, at least a portion of the diverter plate **221**A can be formed from a relatively flexible material such as a rubber or silicone. In this manner, the portion of the diverter plate **221**A can be configured to form a substantially fluid tight seal with the inner surface of the walls **204**. In other embodiments, the diverter plate **221**A can be coupled to the housing **201** via an adhesive. In such embodiments, the adhesive can be configured to form a substantially fluid tight or hermetic seal.

[0050] The diverter plate **221**A defines a first port **224** and a second port **226**. With the diverter plate **221**A disposed within the housing **201** as described above, the first port **224** is in fluid communication with the bypass chamber **205** of the housing **201**. Similarly, the second port **226** is in fluid communication with the outlet adapter **229** via the transfer tube **228**. Expanding further, a first end of the transfer tube **228** is physically and fluidically coupled to the second port **226** of the diverter plate **221**A and a second end of the transfer tube **228** is physically and fluidically coupled to the outlet adapter **229**, thereby defining a fluid flow path between the second port **226** and the outlet adapter **229**. In this manner, the transfer tube **228** is configured to extend from the proximal end portion **202** of the housing **201** to the distal end portion **203** of the housing **201** via the first opening **214** and the second opening **215** defined by the inner walls **212**. Moreover, with a portion of the outlet adapter **229** disposed within the container shroud **218** (as described above), the transfer tube **228** can be configured to transfer a bodily-fluid from the flow control mechanism **230** to an external fluid reservoir, when the external fluid reservoir is fluidically coupled to the outlet adapter **229**.

[0051] The flow control mechanism **230** (e.g., the inlet port) defines a lumen **238** and is movable between a first position and a second position. More specifically, the flow control mechanism **230** is at least partially disposed within a channel **260** defined by the cap **255** (see e.g., FIG. **4**). When the flow control mechanism **230** is in the first position, the lumen **238** is substantially aligned with and in fluid communication with the first port **224** defined by the diverter plate **221**A. Similarly, when the flow control mechanism **230** is in the second position, the lumen **238** is configured to be substantially aligned with and in fluid communication with the second port **226** defined by the diverter plate **221**A. In some embodiments, the flow control mechanism **230** is configured to be manually moved between the first position and the second position via a force applied by a user (e.g., a medical professional). In other embodiments, the flow control mecha-

nism **230** can be moved automatically by a portion of the transfer device **200** (e.g., the actuator **240** or any other suitable component).

[0052] As shown in FIG. **7**, the actuator **240** includes a lever **241** and a plunger **248**. The actuator **240** is configured to be moved between a first configuration and a second configuration. The lever **241** has a proximal end portion **242**, a distal end portion **243**, a pivot portion **245**, and an engagement portion **244**. The pivot portion **245** is configured to be pivotally coupled to the pivot protrusion **209** of the housing **201**. For example, in some embodiments, a pivot pin (not shown) can be inserted through the pivot portion **245** of the lever **241** and the aperture **210** defined by the pivot protrusion **209**. Similarly, the engagement portion **244** of the lever **241** is configured to be movably coupled to an engagement portion **249** of the plunger member **248**. In this manner, the lever **241** can be actuated (e.g., pivoted) about the pivot portion **245** to move the plunger **248** between a first position and a second position, as described in further detail herein.

[0053] The plunger **248** is disposed within the plunger volume **213** and includes the engagement portion **249** and a seal member **254**. More specifically, the plunger **248** can be movably disposed within the plunger volume **213** such that the engagement portion **249** extends through the opening **216** defined by the walls **204**. The seal member **254** is disposed within the plunger volume **213** and engages the inner walls **212** to form a substantially fluid tight seal. The plunger **248** also defines a slot **251** configured to receive the transfer tube **228** of the diverter **220**. More specifically, the slot **251** enables the plunger **248** to move about the transfer tube **228** when the transfer tube **228** traverses the plunger volume **213** (e.g., passes through the first opening **214** and the second opening **215** defined by the inner walls **212**).

[0054] In use, a user can engage the transfer device **200** and couple the flow control mechanism **230** to a proximal end portion of a lumen-defining device (not shown) such as, for example, a butterfly needle. With the flow control mechanism **230** coupled to the lumen-defining device, the lumen **238** is placed in fluid communication with the lumen defined by the lumen-defining device. Furthermore, the distal end portion of the lumen-defining device can be disposed within a portion of the body of a patient (e.g., a vein). In this manner, the lumen **238** is placed in fluid communication with the portion of the body.

[0055] With the flow control mechanism **230** coupled to the lumen-defining device, a user can place the transfer device **200** in the first configuration by aligning the flow control mechanism **230** with the first port **224** defined by the diverter plate **221**A. For example, in some embodiments, the flow control mechanism **230** is moved via manual intervention (e.g., a user slides the flow control mechanism **230** within the channel **260** to the first position). In other embodiments, the flow control mechanism **230** can be stored in the first configuration. In still other embodiments, the flow control mechanism **230** can be placed in the first configuration via the actuator **240** (e.g., a user engaging the actuator **240** can urge the flow control mechanism **230** to move to the first configuration).

[0056] As shown in FIG. **8**, the lumen **238** is placed in fluid communication with the first port **224** when the flow control mechanism **230** is in the first configuration. In this manner, the user can apply an activation force to the lever **241**, thereby moving at least a portion of the actuator mechanism **240** towards the second configuration, as shown by the arrow AA in FIG. **8**. More specifically, the user can engage the housing **201** and the lever **241** and exert a squeezing force, thereby moving the proximal end portion **242** of the lever in the direction of the arrow AA. The squeezing force on the proximal end portion **242** urges the lever **241** to pivot about the pivot protrusion **209** of the housing **201** and the pivot portion **245** of the lever **241** such that the distal end portion **243** moves in the direction of the arrow BB. Similarly stated, the user can pivot the lever **241** relative to the housing **201** such that the proximal end portion **242** is moved towards the housing **201** and the distal end portion **243** is moved away from the housing **201**.

[0057] With the engagement portion **249** of the plunger **248** coupled to the engagement portion **244** of the lever **241**, the movement of the distal end portion **243** of the lever **241** in the direction of the arrow BB urges the plunger **248** to move in the direction of the arrow CC. More specifically, the arrangement of the plunger **248**, the lever **241**, and the inner walls **212** is such that the pivoting motion of the distal end portion **243** of the lever **241** urges the plunger **248** to move in a translational motion within the plunger volume **213** defined by the inner walls **212**. In this manner, the plunger **248** is moved away from the bypass chamber **205** such that a volume of the fluid reservoir **270** is increased, thereby producing a negative pressure within the fluid reservoir **270**.

[0058] As shown by the arrow DD in FIG. **8**, the lumen **238** of the flow control mechanism **230** and the first port **224** define a first fluid flow path that places the first end portion **206** of bypass chamber **205** in fluid communication with the flow control mechanism **230**. Furthermore, with the flow control mechanism **230** coupled to the lumen-defining device, the fluid reservoir **270** is placed in fluid communication with the portion of the patient (e.g., the vein). In this manner, the negative pressure within the fluid reservoir **270** produced by the movement of the plunger **248** introduces a suction force within the portion of the patient. Thus, a bodily-fluid is drawn through the first end portion **206** of the bypass chamber **205** and into the fluid reservoir **270**. In some embodiments, the bodily-fluid can contain undesirable microbes such as, for example, dermally-residing microbes.

[0059] In some embodiments, the magnitude of the suction force can be modulated by increasing or decreasing the amount of activation force (e.g., squeezing force) applied to the actuation mechanism **240**. For example, in some embodiments, it can be desirable to limit the amount of suction force introduced to a vein. In such embodiments, the user can reduce the amount of force applied to the actuator **240**. In this manner, the rate of change (e.g., increase) in the volume of the fluid reservoir **270** can be sufficiently slow to allow time for the negative pressure differential between the vein and the fluid reservoir **270** to come to equilibrium before further increasing the volume of the fluid reservoir **270**. Thus, the magnitude of the suction force can be modulated.

[0060] With the desired amount (e.g., a predetermined amount) of bodily-fluid transferred to the fluid reservoir **270**, the actuator **240** can be moved from the second configuration to a third configuration by reducing or removing the activation force on the proximal end portion **242** of the lever **241**. For example, in some embodiments, the actuator **240** can include a spring (not shown) configured to exert a force to move the lever **241** toward the first position relative to the housing **201**, thereby placing the transfer device **200** in the third configuration. In other embodiments, the user can apply a squeezing force to the distal end portion **243** of the lever **241**

such that the lever **241** pivots about the pivot portion **245**. In this manner, the proximal end portion **242** of the lever **241** is configured to move substantially away from the housing **201** as indicated by the arrow EE in FIG. **9**. In addition, the distal end portion **243** of the lever is configured to move substantially toward the housing **201** as indicated by the arrow FF in FIG. **9**.

[0061] The movement of the distal end portion **243** of the lever **241** can be such that the plunger **248** moves within the plunger volume **213** toward the bypass chamber **205** to reduce the negative pressure within the fluid reservoir **270**, as described above. With the pressure equalized in the fluid reservoir **270**, the flow control mechanism **230** can be moved in the direction of the arrow GG in FIG. **9** to place the lumen **238** in fluid communication with the second port **226** defined by the diverter plate **221**A. Similarly stated, the flow control mechanism **230** is moved within the channel **260** of the cap **255** to align the flow control mechanism **230** with the second port **226**. The alignment of the flow control mechanism **230** with the second port **226** is such that the portion of the patient (e.g., the vein) is placed in fluid communication with the outlet adapter **229** via the transfer tube **228**.

[0062] With the flow control mechanism **230** aligned with the second port **226**, the outlet adapter **229** can be coupled to an external fluid reservoir (not shown). Expanding further, the external fluid reservoir can be inserted into the container shroud **218** such that a portion of the outlet adapter **229** is disposed within the external fluid reservoir. For example, in some embodiments, the external fluid reservoir can be a BacT/ALERT® SN or a BacT/ALERT® FA, manufactured by BIOMERIEUX, INC. In such embodiments, the outlet adapter **229** can include a piercing member (not shown) such as a needle, configured to pierce a septum or membrane included in the fluid reservoir.

[0063] As shown by the arrow HH in FIG. **9**, the lumen **238** of the flow control mechanism **230**, the second port **226**, the transfer tube **228**, and the outlet adapter **229** define a fluid flow path such that the external reservoir (not shown in FIG. **9**) is in fluid communication with the flow control mechanism **230** and, therefore, the portion of the patient (e.g., the vein). Furthermore, the external reservoir can be configured to define a negative pressure (e.g., the known external reservoirs referred to herein are vessels defining a negative pressure). The negative pressure within the external reservoir is such that the negative pressure differential between the external reservoir and the portion of the body of the patient introduces a suction force within the portion of the patient. Therefore, a desired amount of bodily-fluid is drawn into the external reservoir and is fluidically isolated from the first, predetermined amount of bodily-fluid contained within the fluid reservoir **270**.

[0064] In this manner, the bodily-fluid contained in the external reservoir is substantially free from microbes generally found outside of the portion of the patient (e.g., dermally residing microbes, microbes within a lumen defined by the transfer device **200**, microbes within the lumen defined by the lumen defining device, and/or any other undesirable microbe). With the desired amount of bodily-fluid contained in the external fluid reservoir, the user can remove the external fluid reservoir from the transfer device **200** and dispose of the transfer device **200** or utilize the diversion sample contained within the fluid reservoir **270** for other types of testing and/or related medical or non-medical purposes.

[0065] While the transfer device **200** is shown and described in FIGS. **2-9** as disposing the diverter **220** within the housing **201**, in some embodiments, a transfer device can include a diverter and housing that are monolithically formed. For example, FIGS. **10-15** illustrate a transfer device **300** according to an embodiment. As shown in FIGS. **10** and **11**, the transfer device **300** includes a housing **301**, having a diverter **320** and defining a fluid reservoir **370**, a flow control mechanism **330**, and an actuator **340**.

[0066] The housing **301** includes a proximal end portion **302**, a distal end portion **303**, and a set of walls **304**. More particularly, the housing **301** includes a recessed surface **319** from which the walls **304** extend. Furthermore, at least a portion of the recessed surface **319** is configured to be a flat surface from which the diverter **320** can extend. Similarly stated, the diverter **320** is a set of walls configured to extend perpendicularly from the recessed surface **319**. In this manner, the diverter **320** can receive at least a portion of the flow control mechanism **330**, as described in further detail herein. While shown and described as extending perpendicularly from the recessed surface **319**, in other embodiments, the diverter **320** can extend from the recessed surface **319** at any suitable angular orientation.

[0067] As shown in FIG. **12**, the diverter **320** includes an inlet port **322**, a first outlet port **324**, and a second outlet port **326**, and defines and inner volume **321**. The inner volume **321** is configured to extend through the recessed surface **319** such that the inner volume **321** is substantially open. Similarly stated, the diverter **320** is configured such that a set of walls that define the inner volume **321** are substantially cylindrical and define an open space therebetween (e.g., the inner volume **321**). The inner volume **321** is configured to receive at least a portion of the flow control mechanism **330**, as further described herein. The inlet port **322** of the diverter **320** defines an inlet lumen **323**. The inlet lumen **323** is configured to be in fluid communication with the inner volume **321**. Similarly stated, the inlet lumen **323** of the inlet port **322** extends through the wall defining the inner volume **321** of the diverter **320**.

[0068] The inlet port **322** is further configured to be fluidically coupled to a medical device (not shown) defining a fluid flow pathway for withdrawing and/or conveying the bodily-fluid from a patient to the transfer device **300**. For example, the inlet port **322** can be fluidically coupled to a needle or other lumen-defining device (e.g., flexible sterile tubing) as described above. In this manner, when the lumen-defining device is disposed within a portion of a body of the patient (e.g., within a vein of the patient), the inner volume **321** of the diverter **320** is placed in fluid communication with the portion of the body of the patient.

[0069] The first outlet port **324** of the diverter **320** defines a first outlet lumen **325**. The first outlet lumen **325** is in fluid communication with the inner volume **321** of the diverter **320** and the fluid reservoir **370** (described above). Similarly stated, the first outlet lumen **325** is configured to extend through the wall defining the inner volume **321**, thereby placing the fluid reservoir **370** in fluid communication with the inner volume **321**. The second outlet port **326** of the diverter **320** defines a second outlet lumen **327** and is configured to be coupled to an external fluid reservoir. In this manner, the second outlet lumen **327** can extend through the wall defining the inner volume **321** to be in fluid communication with the inner volume **321**. Moreover, the second outlet port **326** can be fluidically coupled to the external reservoir to place the

external fluid reservoir in fluid communication with the inner volume **321** via the second outlet lumen **327**, as described in further detail herein.

[0070] Referring back to FIG. **11**, the actuator mechanism **340** includes an engagement portion **345** and an activation portion **346**. The actuator mechanism **340** can be coupled to the housing **301** in any suitable manner. For example, in some embodiments, a portion of the actuator mechanism **340** can be disposed within the inner volume **321**. In some embodiments, the walls **304** can include a feature (e.g., a tab, a lock, and/or the like) configured to selectively retain the actuator mechanism **340** in contact with the housing **301**. The activation portion **346** is configured to contact, mate, or otherwise engage the flow control mechanism **330**. In this manner, the engagement portion **345** can be engaged by a user to rotate the actuator mechanism **340** relative to the housing **301** to move the transfer device **300** between a first configuration, a second configuration, and a third configuration, as described in further detail herein.

[0071] As shown in FIG. **13**, the flow control mechanism **330** defines a first lumen **338** and a second lumen **339** and is disposed within the inner volume **321** defined by the diverter **320**. In this manner, the flow control mechanism **330** defines a circular cross-sectional shape such that when the flow control mechanism **330** is disposed within the inner volume **321**, a portion of the flow control mechanism **330** forms a friction fit with the walls of the diverter **320** defining the inner volume **321**. For example, in some embodiments, the flow control mechanism **330** is formed from silicone and has a diameter larger than the diameter of the walls defining the inner volume **321**. As such, the diameter of the flow control mechanism **330** is reduced when the flow control mechanism **330** is disposed within the inner volume **321**. Thus, the outer surface of the flow control mechanism **330** forms a friction fit with the inner surface of the walls defining the inner volume **321**. In other embodiments, the flow control mechanism **330** can be any suitable elastomer configured to deform when disposed within the inner volume **321** of the diverter **320**.

[0072] The flow control mechanism **330** can be coupled to and/or can otherwise engage the actuator **340**. For example, in some embodiments, the actuator **340** can be coupled to the flow control mechanism **330** via a mechanical fastener and/or adhesive. In other embodiments, the actuator **340** and the flow control mechanism **330** can be coupled in any suitable manner such that the flow control mechanism **330** moves concurrently with the actuator **340** when the actuator **340** is rotated relative to the housing **301**. In this manner, the flow control mechanism **330** can be moved relative to the diverter **320** to place the first lumen **338** or the second lumen **339** in fluid communication with the inlet port **322**, the first outlet port **324**, and/or the second outlet port **326**, as described in further detail herein.

[0073] As shown in FIG. **13**, the transfer device **300** can be stored in the first configuration in which the flow control mechanism **330** fluidically isolates the inlet port **322** from the first outlet port **324** and the second outlet port **326**. Expanding further, the flow control mechanism **330** can be disposed within the inner volume **321** of the diverter **320** such that the first lumen **338** and the second lumen **339** are fluidically isolated from the inlet lumen **323**, the first outlet lumen **325**, and the second outlet lumen **327**. In such embodiments, the friction fit defined by the flow control mechanism **330** and the walls of the diverter **320** defining the inner volume **321** maintain the flow control mechanism **330** in the first configuration until, for example, user intervention moves the actuator **340**, thereby moving the flow control mechanism **330** to the second configuration.

[0074] In use, a user can manipulate the transfer device **300** to couple the inlet port **322** to a proximal end portion of a lumen-defining device (not shown) such as, for example, a butterfly needle and/or the like. Furthermore, the distal end portion of the lumen-defining device can be disposed within a portion of the body of a patient (e.g., a vein) to place the inlet lumen **323** in fluid communication with the portion of the body of the patient. In a similar manner, the second outlet port **326** can be coupled to an external fluid reservoir (not shown). The external fluid reservoir can be any suitable reservoir. For example, in some embodiments, the external fluid reservoir can be a BacT/ALERT® SN or a BacT/ALERT® FA, manufactured by BIOMERIEUX, INC.

[0075] With the inlet port **322** coupled to the lumen-defining device and the second outlet port **326** coupled to the external fluid reservoir, a user can begin the transfer of a bodily-fluid by applying an activation force to the engagement portion **344** of the actuator **340**, thereby moving the actuator **340** to a second position, as shown by the arrow II in FIG. **14**. The movement of the actuator **340** is such that the flow control member **340** is urged to move in the direction of the arrow II, thereby placing the transfer device **300** in the second configuration. In addition, the fluid reservoir **370** can be configured such that a negative pressure exists within an inner volume **373** such as, for example, an evacuated sample tube (e.g., BD Vacutainer®). Therefore, when the flow control mechanism **330** is placed in its second configuration, a negative pressure differential introduces a suction force within the first lumen **338** of the flow control mechanism **330**, and the inlet lumen **323** and the first outlet lumen **325** of the diverter **320**.

[0076] As shown by the arrow JJ, the inlet lumen **323** of the inlet port **322**, the first lumen **338** of the flow control mechanism **330**, and the first outlet lumen **325** of the first outlet port **324** define a first fluid flow path that places the inner volume **373** defined by the fluid reservoir **370** in fluid communication with the inlet port **322**. Furthermore, with the inlet port **322** coupled to the lumen-defining device, the first fluid flow path places the fluid reservoir **370** in fluid communication with the portion of the patient (e.g., the vein) and at least a portion of the suction force (e.g., applied by the negative pressure differential, as described above) is introduced to the portion of the patient. Thus, a bodily-fluid can be drawn into the fluid reservoir **370**. In some embodiments, the bodily-fluid can contain undesirable microbes such as, for example, dermally-residing microbes dislodged during the insertion of the lumen-defining device.

[0077] In some embodiments, the magnitude of the suction force can be modulated by further moving the actuator **340** in the direction of the arrow II. For example, in some embodiments, it can be desirable to limit the amount of suction force introduced to a vein. In such embodiments, the user can move the actuator **340** and the flow control mechanism **330** (e.g., in the II direction) to constrict or otherwise reduce the size of at least a portion of the first fluid pathway (e.g., an inner diameter) between the inlet lumen **323** and the first lumen **338** and the first outlet lumen **325** and the first lumen **338**, thereby reducing the suction force introduced into the vein of the patient.

[0078] With the desired amount of bodily-fluid transferred to the fluid reservoir **370**, a user can engage the transfer device

300 to move the transfer device **300** from the second configuration to the third configuration, wherein a flow of bodily-fluid is transferred to the external reservoir (e.g., such as those described above). In some embodiments, the desired amount of bodily-fluid transferred to the fluid reservoir **370** is a predetermined amount of fluid. For example, in some embodiments, the transfer device **300** can be configured to transfer bodily-fluid until the pressure within the fluid reservoir **370** is equilibrium with the pressure of the portion of the body in which the lumen-defining device is disposed (e.g., the vein), as described above. In some embodiments, at least a portion of the fluid reservoir **370** can be transparent to allow visualization of the bodily fluid flowing into the fluid reservoir **370**. Although not shown, the fluid reservoir **370** can include indicators (e.g., 0.1 mL, 0.5 mL, 1 mL, 2 mL, 3 mL, 4 mL, and/or 5 mL graduation marks) that the user can visualize to determine the volume of bodily-fluid that has been received in the fluid reservoir **370**.

[0079] The transfer device **300** can be moved from the second configuration to the third configuration by moving the actuator mechanism **340** in the direction of the arrow KK in FIG. **15**. As the actuator mechanism **340** is moved from its second configuration toward its third configuration, the actuator **340** rotates the flow control mechanism **330** toward the third configuration. In this manner, the first lumen **338** is fluidically isolated from the inlet lumen **323** and the first outlet lumen **325**, and the second lumen **339** is placed in fluid communication with the inlet lumen **323** defined by the inlet port **322** and the second outlet lumen **327** defined by the second outlet port **326**.

[0080] As shown by the arrow LL in FIG. **15**, the inlet lumen **323** of the inlet port **322**, the second lumen **339** of the flow control mechanism **330**, and the second outlet lumen **327** of the second outlet port **326** define a second fluid flow path that can place the external reservoir (not shown in FIG. **15**) in fluid communication with the inlet port **322** and, therefore, the portion of the patient (e.g., the vein). Furthermore, the external reservoir can be configured to define a negative pressure (e.g., the known external reservoirs referred to herein are vessels defining a negative pressure). The negative pressure within the external reservoir is such that the negative pressure differential between the external reservoir and the portion of the body of the patient introduces a suction force within the portion of the patient. Therefore, a desired amount of bodily-fluid is drawn into the external reservoir and is fluidically isolated from the first, predetermined amount of bodily-fluid contained within the fluid reservoir **370**.

[0081] The bodily-fluid contained in the external reservoir is substantially free from microbes generally found outside of the portion of the patient (e.g., dermally residing microbes, microbes within a lumen defined by the transfer device **300**, microbes within the lumen defined by the lumen defining device, and/or any other undesirable microbe). In some embodiments, with the desired amount of bodily-fluid contained in the external fluid reservoir, the user can further move the actuator **340** in the proximal direction to place the transfer device **300** in a fourth configuration. In such embodiments, the actuator **340** can be moved in the direction of the arrow KK to fluidically isolate the first lumen **338** and the second lumen **339** of the flow control mechanism **330** from the inlet lumen **323**, the first outlet lumen **325**, and the second outlet lumen **327** of the diverter **320**. Thus, the bodily-fluid contained within the fluid reservoir **370** is fluidically isolated from a volume outside the fluid reservoir **370** and the external reservoir can be decoupled from the transfer device **300**. In some instances, additional external reservoirs can then be fluidically coupled to the transfer device **300**, and the user can rotate the actuator **340** back to the third configuration to establish fluid communication between the patient and the additional external reservoir and/or sample vessel. In some embodiments, the actuator **340** can include a sensible indication (e.g., audible, visual and/or tactile) of which position the transfer device **300** is in. For example, the actuator can include numeric indicators of the position of the transfer device **300**.

[0082] While various embodiments have been described above, it should be understood that they have been presented by way of example only, and not limitation. Where methods and steps described above indicate certain events occurring in certain order, those of ordinary skill in the art having the benefit of this disclosure would recognize that the ordering of certain steps may be modified and that such modifications are in accordance with the variations of the invention. Additionally, certain of the steps may be performed concurrently in a parallel process when possible, as well as performed sequentially as described above. Additionally, certain steps may be partially completed before proceeding to subsequent steps.

[0083] While the lever **241** is described in reference to FIG. **9** as being returned to the first position relative to the housing **201** when the transfer device **200** is moved to the third configuration, in other embodiments, the lever **241** need not be moved from the second position relative to the housing **201**. For example, in some embodiments, the pressure differential between the vein and the fluid reservoir **270** can be in equilibrium without substantially reducing the volume of the fluid reservoir **270**. Thus, the plunger **248** need not be moved toward the bypass chamber **205** and the lever **241** of the actuator **240** can remain in the second position relative to the housing **201** while a bodily-fluid is transferred to an external reservoir.

[0084] While various embodiments have been particularly shown and described, various changes in form and details may be made. For example, while the actuator **340** is shown and described with respect to FIGS. **13-15** as being rotated in a single direction, in other embodiments, an actuator can be rotated in a first direction (e.g., in the direction of the arrow II in FIG. **14**) and a second direction, opposite the first. In such embodiments, the rotation in the second direction can be configured to move a transfer device through any number of configurations. In other embodiments, the rotation of the actuator in the second direction can be limited. For example, in some embodiments, the actuator can be limitedly rotated in the second direction to reduce the diameter of a flow path between a flow control mechanism and a lumen such as to reduce a suction force, as described above. In some embodiments, the actuator can include a mechanical stop or lock to fluidically isolate the first volume of bodily fluid received from the patient (i.e., the contaminated sample). Said another way, once the first reservoir is filed with a predetermined volume of bodily fluid and the user has moved the actuator to being drawing additional sample, the actuator cannot be moved back to establish fluid communication the first sample volume.

[0085] Although various embodiments have been described as having particular features and/or combinations of components, other embodiments are possible having any combination or sub-combination of any features and/or components from any of the embodiments described herein. For

example, while the transfer device **300** is shown and described with respect to FIGS. **13-15** as having a first, second, third and forth configuration, in other embodiments, the transfer devices described herein may have more or fewer configurations.

[0086] The specific configurations of the various components can also be varied. For example, the size and specific shape of the various components can be different than the embodiments shown, while still providing the functions as described herein. More specifically, the size and shape of the various components can be specifically selected for a desired rate of bodily-fluid flow into a fluid reservoir.

1. A device for parenterally-procuring bodily-fluid samples with reduced contamination from a patient, the device comprising:

a pre-sample reservoir fluidically couplable to a delivery member, the pre-sample reservoir configured to receive and isolate a predetermined volume of bodily-fluid withdrawn from the patient;

an actuator mechanism operably coupled to the pre-sample reservoir and configured to form a negative pressure in the pre-sample reservoir when actuated by a user to urge the bodily-fluid sample to flow into the pre-sample reservoir; and

a diverter operable to selectively control fluid flow between the delivery member and the pre-sample reservoir, the diverter including a flow control mechanism that defines a first fluid flow path and a second fluid flow path,

the diverter being configured to be moved between a first configuration such that the bodily-fluid can flow through the first flow path to the pre-sample reservoir, and a second configuration such that the bodily-fluid can flow through the second flow path to a sample reservoir fluidically coupled to the diverter.

2. The device of claim **1**, wherein the diverter fluidically isolates the pre-sample reservoir from the second flow path.

3. The device of claim **1**, wherein the flow control mechanism is an inlet port slidably coupled to the diverter.

4. The device of claim **1**, wherein the flow control mechanism is movable between a first position relative to the diverter in which the flow control mechanism is in fluid communication with the pre-sample reservoir and a second position relative to the diverter in which the flow control mechanism is in fluid communication with the sample reservoir.

5. The device of claim **1**, wherein the actuator mechanism is configured to be moved between a first configuration and a second configuration to move the diverter between its first configuration and its second configuration.

6. The device of claim **1**, wherein the actuator mechanism includes a lever coupled to a plunger, the lever configured to be moved from a first position to a second position to move the plunger between a first position and a second position to create a negative pressure in the pre-sample reservoir.

7. The device of claim **6**, wherein the lever is pivotally coupled to the plunger.

8. The device of claim **6**, wherein a surface of the plunger defines at least a portion of the pre-sample reservoir.

9. The device of claim **1**, wherein the diverter includes a locking mechanism configured to at least temporarily lock the diverter in the second configuration once the diverter has been moved from the first configuration to the second configuration.

10. A method for procuring bodily-fluid samples from a patient using a parenteral sampling device, the device including an actuation mechanism, a flow control mechanism and a pre-sample reservoir, the method comprising:

establishing fluid communication between a patient and the pre-sample reservoir;

withdrawing a first volume of bodily fluid by moving the actuation mechanism from a first position to a second position to create a negative pressure in the pre-sample reservoir; and

moving the flow control mechanism from a first configuration to a second configuration,

the first configuration operable to allow bodily fluid to flow through a first flow path from the patient to the pre-sample reservoir, the second configuration operable to allow bodily fluid to flow through a second flow path from the patient to a sample reservoir.

11. The method of claim **10**, wherein moving the flow control mechanism from a first configuration to a second configuration includes sliding an inlet port of the parenteral sampling device from a first position to a second position.

12. The method of claim **10**, wherein moving the actuation mechanism from the first position to the second position includes rotating a lever around a pivot point.

13. The method of claim **10**, wherein withdrawing the first volume includes withdrawing at least a predetermined volume that includes contaminants such that when the flow control mechanism is moved from the first configuration to the second configuration, the sample reservoir receives, via the second flow path, a flow of bodily-fluid that is substantially free from contaminants.

14. A bodily-fluid sampling device, comprising:

a pre-sample reservoir fluidically couplable to a delivery member, the pre-sample reservoir having a negative pressure and configured to receive and isolate a predetermined volume of bodily-fluid withdrawn from a patient, via the delivery member;

a diverter mechanism fluidically couplable to the pre-sample reservoir, the diverter mechanism including a flow control mechanism configured for rotational movement between a first configuration in which the flow control mechanism and the diverter mechanism collectively define a first fluid flow path between the delivery member and the pre-sample reservoir and a second configuration in which the flow control mechanism and the diverter mechanism collectively define a second fluid flow path between the delivery member and a sample reservoir operably coupled to the diverter mechanism; and

an actuator rotatably coupled to the diverter mechanism and configured to be rotated from a first position, wherein the flow control mechanism is in the first configuration, to a second position, wherein the flow control mechanism is in the second configuration.

15. The device of claim **14**, wherein the movement of the actuator between the first position and the second position rotates the flow control mechanism relative to the diverter mechanism between the first configuration and the second configuration.

16. The device of claim **14**, wherein the movement of the actuator between the first position and the second position moves the flow control mechanism relative to the diverter mechanism in a substantially linear path between the first configuration and the second configuration.

17. The device of claim **14**, wherein the pre-sample reservoir is monolithically formed with the diverter mechanism.

18. The device of claim **14**, wherein the pre-sample, reservoir is removably coupled to the diverter mechanism.

19. A method for procuring bodily-fluid samples from a patient using a parenteral sampling device, the device including a flow control mechanism and an integrated pre-sample reservoir having a negative pressure, the method comprising:

inserting a needle into the patient while the flow control mechanism is in a first configuration, the first configuration operable to prevent bodily-fluid from flowing from the patient to the integrated pre-sample reservoir;

moving the flow control mechanism from the first configuration to a second configuration, the second configuration operable to allow bodily fluid to flow through a first flow path defined at least in part by the flow control mechanism to the pre-sample reservoir; and

moving the flow control mechanism from the second configuration to a third configuration after a predetermined volume of bodily-fluid has been received in the pre-sample reservoir, the third configuration operable to allow bodily fluid to flow through a second flow path defined at least in part by the flow control mechanism to a sample reservoir.

20. The method of claim **19**, wherein the second fluid flow path is fluidically isolated from the pre-sample reservoir.

21. The method of claim **19**, further comprising:

moving the flow control mechanism from the third configuration to a forth configuration, the forth configuration operable to prevent bodily-fluid from flowing through the first flow path and the second flow path.

22. The method of claim **19**, wherein the parenterally sampling device further includes a lock-out mechanism, the lock-out mechanism configured to prevent the flow control mechanism from being moved back to the second configuration once it has been moved to the third configuration.

* * * * *