Trials@uspto.gov
Tel: 571-272-7822

Paper: 9
Entered: September 8, 2025

UNITED STATES PATENT AND TRADEMARK OFFICE

BEFORE THE PATENT TRIAL AND APPEAL BOARD

META PLATFORMS, INC.,
Petitioner,

v.

SITNET, LLC,
Patent Owner.

IPR2024-00531
Patent 11,470,682 B1

Before THU A. DANG, NEIL T. POWELL, and KARA L. SZPONDOWSKI, *Administrative Patent Judges*.

DANG, *Administrative Patent Judge*.

JUDGMENT
Final Written Decision
Determining All Challenged Claims Unpatentable
35 U.S.C. § 318(a)

I. INTRODUCTION

A. Background

In response to a Petition (Paper 1, "Pet.") filed by Meta Platforms, Inc. ("Petitioner"), we instituted *inter partes* review of claims 1–20 (the "challenged claims") of U.S. Patent No. 11,470,682 B1 (Ex. 1001, "the '682 patent"). *See* Paper 7 ("Dec. Inst.").

After we instituted this proceeding, SitNet LLC ("Patent Owner") did not file a response to the Petition by the designated deadline. Thus, Patent Owner waived its right to file a response. The record now before the panel reflects that the arguments and supporting evidence in the Petition stand unopposed as a part of the trial that was instituted.

We have jurisdiction under 35 U.S.C. § 6. This Decision is a Final Written Decision under 35 U.S.C. § 318(a) as to the patentability of the claims on which we instituted trial. Based on the record before us, Petitioner has shown by a preponderance of the evidence that claims 1–20 of the '682 patent are unpatentable.

B. Related Proceedings

The parties identify the '682 patent as the subject of *SitNet, LLC v. Meta Platforms, Inc.*, No. 1:23-CV-06389 (S.D.N.Y.) ("the district court litigation"). Pet. 3; Paper 4.

Petitioner also identifies the following USPTO proceedings challenging other, related patents asserted by Patent Owner in the district court litigation: *Meta Platforms, Inc. v. SitNet, LLC*, IPR2024-00528 (PTAB), challenging U.S. Patent No. 8,249,932 B1; *Meta Platforms, Inc. v. SitNet, LLC*, IPR2024-00529 (PTAB), challenging U.S. Patent No.

8,332,454 B1; and *Meta Platforms, Inc. v. SitNet, LLC*, IPR2024-00530 (PTAB), challenging U.S. Patent No. 9,877,345 B2. Pet. 3.

C. The ’682 Patent

The ’682 patent, titled “Method and System for Using a Situational Network,” issued on October 11, 2022, from Application No. 16/730,339 filed on December 30, 2019. Ex. 1001, codes (54), (45), (21), (22). The ’682 patent discloses a network system for accessing situation related information. *Id.* at code (57). The system includes a network connection for receiving an indication of an occurrence of a situation, and a situational network formed based on the occurrence of the situation. *Id.* The situational network includes a plurality of participant devices determined to be geographically proximate to the situation. *Id.* The system further includes a second network connection for presenting a roll call query to each of the plurality of participant devices soliciting a reply related to a status of the participant, a plurality of network connections established for receiving a status response from the participant devices, and a database for aggregating the status responses from responsive participants into a roll call list. *Id.*

Figure 1 of the ’682 patent, reproduced below, illustrates a network diagram for a situational network (SitNet). *Id.* at 2:7–8, 4:12–16.

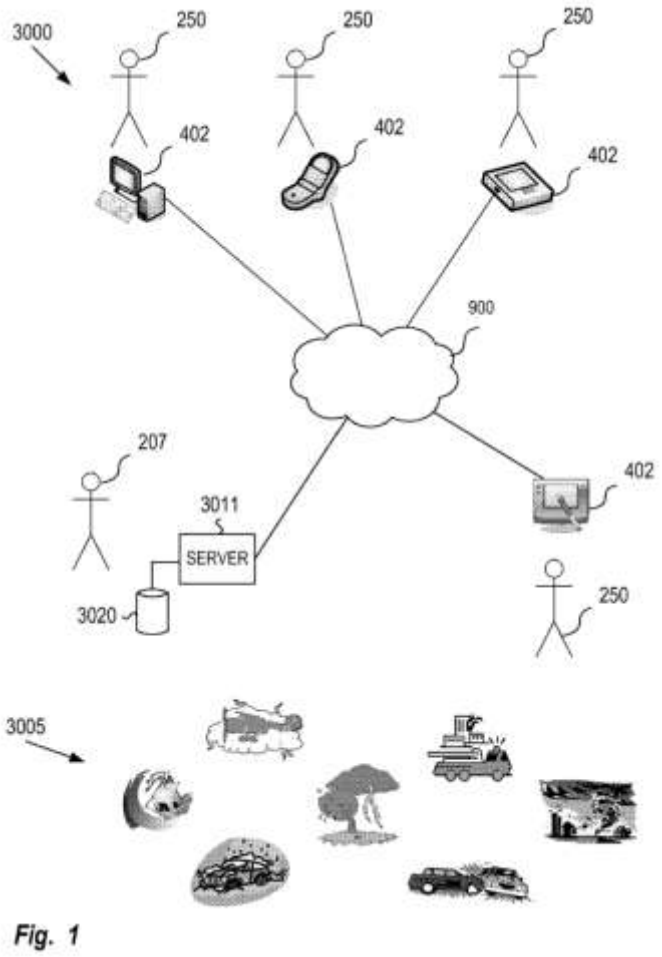

Figure 1 illustrates a network diagram for a Situational Network 3000. *Id.* at 2:7–8, 4:12–16.

Situational network (SitNet) 3000 illustrated in Figure 1 is created when occurrence of event or situation 3005 causes connections/links to be established between, within, or among a set of participants 250, 207. *Id.* at 4:12–25. SitNet 3000 allows the participants (e.g., 250, 207) to interact and exchange information over connections to, or through, computer network 900 regarding event or situation 3005. *Id.* Examples of events or situations 3005 that may initiate the formation of a situational network include a weather phenomenon (e.g., hurricanes), emergency situations (e.g., building fires), weather related activities (e.g., skiing or surfing), and

navigation or travel incidents (e.g., road closures or construction). *Id.* at 5:1–5:11. The connections, or links, established in forming and sustaining SitNet 3000 may be persistent or temporary. *Id.* at 4:57–67. A persistent connection allows participants to exchange information without requiring the user to re-authenticate, re-authorize, or re-create the connection. *Id.* Temporary connections require one or both sides of the link to re-authenticate or re-authorize the connection each time information is to be sent or received. *Id.*

If the event or situation is not stationary, or changes over time (e.g., in scope or location, such as, for example, a weather event with a time-dependent trajectory or size), participants in SitNet 3000 may also change as the situation evolves over time. *Id.* at 5:18–26.

Participants 207 in SitNet 3000 are "external entities . . . also called situation authorities, central authorities or trusted providers, that generally are able to aggregate and provide comprehensive information related to the situation," and include news organizations, weather agencies, traffic agencies, emergency relief organizations, and government agencies (e.g., local fire departments, state Departments of Transportation, and Federal Emergency Management Agency (FEMA)). *Id.* at 4:25–36. Situation authority server 3011 (also called an event node server) corresponds to each situation authority 207. *Id.* at 4:36–41. Situation authority server 3011 may be connected to database 3020 for storing information related to situation 3005 or data related to other participants in SitNet 3000. *Id.*

Participants 250 in SitNet 3000 are "users . . . which are alternately referred to as individuals or members," and they are connected via SitNet 3000 using devices 402 (such as cell phones, PDA's, personal computers,

and so on). *Id.* at 4:42–56. Devices 402 may be connected into SitNet 3000 automatically, by requesting a connection, or by receiving an invitation to connect. *Id.*

Figure 31 of the ’682 patent, reproduced below, illustrates an example of an event relative embodiment of a SitNet. *Id.* at 3:20–21, 5:34–35.

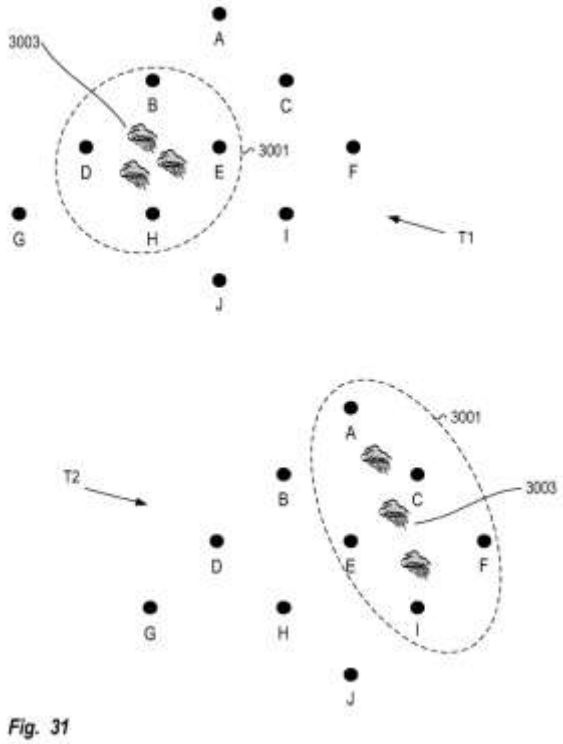

Figure 31 illustrates an example of an event relative embodiment of a SitNet. *Id.* at 3:20–21, 5:34–35.

Figure 31 shows an event relative SitNet at two different times T1 and T2. *Id.* at 5:34–43. At time T1, participants B, D, E, and H are connected to a situation authority in SitNet 3001 that has been established for a cluster of severe thunderstorms 3003. *Id.* At time T2, in response to changes in the location and shape of thunderstorm cluster 3003, participants A, C, F, and I have been added to the SitNet 3001, and participants B, D, and H have been

disconnected. *Id.* Participant E is included in the SitNet 3001 at both times T1 and T2. *Id.*

The ’682 patent also describes a “roll-call” or “check-in” feature that may be included in a situational network for a disaster or emergency event, to establish a list of persons that might be missing or may need assistance. *Id.* at 27:10–37. A server corresponding to an event node of the SitNet may invite users determined to be physically threatened by a disaster or emergency event, to check-in. *Id.* The server of the event node may determine user Personal Information Aggregators (PIAs) that are to be contacted through stored lists, such as apartment or office building occupancy records, or postal records for streets or zip codes. *Id.* at 27:14–23; *see also id.* at 8:24–36 (describing PIAs). People identified with a PIA are sent an unsolicited message to reply if they are alright (i.e., provide a positive response). *Id.* at 27:20–27. A user may also respond to the check-in that they need assistance and provide location information to emergency responders. *Id.* Non-responding PIAs are reported to emergency management officials to decide further actions that may be required to locate those individuals. *Id.* at 29.

A situation authority or trusted provider establishing an event node for a server that hosts the roll-call or check-in feature, may provide a searchable message board to users connected to the SitNet (as well as visitors not connected to the SitNet) that allows sharing of information about individuals in the SitNet with persons outside the SitNet. *Id.* at 27:38–45. The message board may be accessible by a website on the internet (outside the SitNet). *Id.* at 27:53–28:2. A visitor to the website can search the message board for information related to a specific situation or event. *Id.* The information may

be tagged with a location coordinate so that check-in and other information can be searched and obtained down to a zip code, street, or individual household level. *Id.*

D. The Challenged Claims

Of the challenged claims (claims 1–20), claims 1 and 11 are independent claims. Claim 1 is illustrative and is reproduced below:

> 1. A server for providing roll call based information, the server comprising:
>
> a network controller configured to:
>
> receive an information item from a user device, wherein the information item identifies a situation; and
>
> make the information item available to a first plurality of user devices;
>
> a central processing unit, coupled to the network controller, configured to verify that the information item is related to the situation; and
>
> in response to the verifying, make a message board related to the situation available to a second plurality of user devices;
>
> wherein the second plurality of user devices was identified based on the second plurality of user devices being geographically proximate to the situation; and
>
> wherein the message board comprises a roll call list that includes status responses to roll call queries that were provided to the second plurality of user devices in order to solicit the status responses.

Ex. 1001, 34:17–38. Claim 11 recites similar limitations but is directed to a "method for providing roll call based information." *Id.* at 35:13–30.

E. Asserted Grounds of Unpatentability

We instituted *inter partes* review of all challenged claims, claims 1–20, on all challenges in the Petition. Petitioner asserts that claims 1–20 of the ’682 patent are unpatentable based on the following grounds (Pet. 12):

Claims Challenged	**35 U.S.C. §[1]**	**Reference(s)/Basis**
1–20	103	Burfeind,[2] Crowley[3]
1–8, 11–18	103	Smith,[4] Sinha[5]

[1] The Leahy-Smith America Invents Act (“AIA”), Pub. L. No. 112-29, 125 Stat. 284, 287–88 (2011), amended various provisions of 35 U.S.C. Because the ’682 patent claims the benefit of the filing date from an application filed before March 16, 2013, we apply the pre-AIA version of the statutory basis for unpatentability. *See* Ex. 1001, code (60) (indicating the ’682 patent is a “[c]ontinuation of application No. 16/207,059, filed on Nov. 30, 2018, now Pat. No. 10,524,307, which is a continuation of application No. 16/164,715, filed on Oct. 18, 2018, now Pat. No. 10,375,759, which is a continuation of application No. 15/638,722, filed on Jun. 30, 2017, now Pat. No. 10,117,290, which is a continuation of application No. 14/861,340, filed on Sept. 22, 2015, now Pat. No. 9,877,345, which is a continuation of application No. 13/612,964, filed on Sept. 13, 2012, now Pat. No. 9,143,535, which is a continuation of application No. 13/274,712, filed on Oct. 17, 2011, now Pat. No. 8,332,454, which is a division of application No. 11/924,711, filed on Oct. 26, 2007, now Pat. No. 8,069,202”).
[2] U.S. Patent Appl. Publication No. 2007/0233635 A1, published October 4, 2007, filed April 4, 2006 (Ex. 1004, “Burfeind”).
[3] U.S. Patent Appl. Publication No. 2006/0270419 A1, published November 30, 2006, filed May 11, 2005 (Ex. 1005, “Crowley”).
[4] U.S. Patent Appl. Publication No. 2005/0197775 A1, published September 8, 2005, filed December 30, 2004 (Ex. 1006, “Smith”).
[5] U.S. Patent Appl. Publication No. 2008/0208605 A1, published August 28, 2008, filed October 20, 2007 (Ex. 1007, “Sinha”).

Claims Challenged	35 U.S.C. §[1]	Reference(s)/Basis
9, 10, 19, 20	103	Smith, Sinha, Gage[6]

Petitioner relies on the Declaration of Jeremy Cooperstock, Ph.D. (Ex. 1003) in support of its unpatentability contentions.

II. ANALYSIS

A. Level of Ordinary Skill in the Art

In determining whether an invention would have been obvious at the time it was made, we consider the level of ordinary skill in the pertinent art at the time of the invention. *Graham v. John Deere Co.*, 383 U.S. 1, 17 (1966). In our analysis, various factors may be considered, including the "type of problems encountered in the art; prior art solutions to those problems; rapidity with which innovations are made; sophistication of the technology; and educational level of active workers in the field." *In re GPAC, Inc.*, 57 F.3d 1573, 1579 (Fed. Cir. 1995) (quotation marks omitted). Furthermore, the prior art itself can reflect the appropriate level of ordinary skill in the art. *Okajima v. Bourdeau*, 261 F.3d 1350, 1355 (Fed. Cir. 2001).

Relying on the Declaration of Dr. Cooperstock, Petitioner contends that a person of ordinary skill in the art (POSITA) at the time of the invention of the '682 patent would have had a bachelor's degree in Computer or Electrical Engineering or equivalent discipline, and approximately two years' experience in telecommunications or computer networking, whereby additional education could substitute for professional

[6] U.S. Patent Appl. Publication No. 2008/0139165 A1, published June 12, 2008, filed December 11, 2006 (Ex. 1009, "Gage").

experience, and significant work experience could substitute for formal education. Pet. 13 (citing Ex. 1003 ¶¶ 62–63).

We adopt Petitioner's assessment of the level of a person of ordinary skill in the art because it is consistent with the problems addressed in the '682 patent and the prior art. *See Okajima*, 261 F.3d at 1354–55 (holding that absent evidence to the contrary, "the prior art itself [may] reflect[] an appropriate level" of ordinary skill in the art).

B. Claim Construction

We construe each claim "in accordance with the ordinary and customary meaning of such claim as understood by one of ordinary skill in the art and the prosecution history pertaining to the patent." 37 C.F.R. § 42.100(b) (2020). Under this standard, claim terms are generally given their plain and ordinary meaning as would have been understood by a POSITA at the time of the invention and in the context of the entire patent disclosure. *See Phillips v. AWH Corp.*, 415 F.3d 1303, 1313 (Fed. Cir. 2005) (en banc).

In the Decision on Institution, we determined that no terms of the challenged claims require explicit construction.[7] We discern no reason to further discuss construction of any claim terms in this Final Written Decision.

[7] The Decision on Institution noted that Petitioner submitted "that no claim terms require construction and all claim terms should receive their plain and ordinary meaning in view of the '682 patent" (Pet. 14 (citing Ex. 1003 ¶ 64)), which Patent Owner did not challenge (Patent Owner did not file a Preliminary Response).

C. Principles of Law

A patent claim is unpatentable under 35 U.S.C. § 103(a) if the differences between the claimed subject matter and the prior art are such that the subject matter, as a whole, "would have been obvious at the time the invention was made to a person having ordinary skill in the art to which said subject matter pertains." *KSR Int'l Co. v. Teleflex Inc*., 550 U.S. 398, 406 (2007). The question of obviousness is resolved on the basis of underlying factual determinations including: (1) the scope and content of the prior art; (2) any differences between the claimed subject matter and the prior art; (3) the level of ordinary skill in the art; and (4) objective evidence of non-obviousness. *See Graham*, 383 U.S. at 17–18.

D. Asserted Obviousness of Claims 1–20 over Burfeind and Crowley (Petitioner's styled Ground 1)

Petitioner contends that a combination of Burfeind and Crowley renders obvious claims 1–20 of the '682 patent. Pet. 15–51 (Ground 1). In particular, Petitioner contends that Burfeind teaches an organization device that includes a network controller (in the form of Burfeind's communication device) configured to perform the operations recited in claim 1, and the similar operations recited in claim 11. *Id.* at 22–27. Petitioner further contends the combination of Burfeind and Crowley teaches a central processing unit configured to perform the operations recited in claim 1 (and the similar operations recited in claim 11) with (i) Burfeind disclosing a central processing unit in the form of a processing unit that is coupled to a communication device (claimed network controller), is configured to create and store new events (claimed situations), and provides an event status interface (claimed message board related to a situation) with a roll call list to

a second plurality of user devices, the roll call list specifying participation statuses of entities invited to an event, and (ii) Crowley teaching a system that, like the claimed central processing unit, is configured to verify that a received information item is related to a situation (an event in Crowley), and invites users (claimed second plurality of user devices) to the event based on their proximity to the event. *Id.* at 28–36.

Before analyzing Petitioner's contentions in detail, we summarize the asserted art to Burfeind and Crowley below.

1. Burfeind

Burfeind is titled "Systems and Methods for Organizing an Event and Tracking Attendance Status," and "describes systems and methods for organizing an event and tracking the attendance status of event participants." Ex. 1004, codes (54), (57), ¶ 2. In accordance with Burfeind, when a user accesses an organization device and schedules a location-specific event, the user has the option of inviting event participants, who can send to the organization device a response regarding the participation status of the invitee. *Id.* at code (57). The organization device tracks the participation status of each invitee, and may also provide the participation status of each invitee to other invitees. *Id.* The organization device may also communicate with a portable, location-aware electronic device of one or more of the invitees, to track and provide arrival status of these invitees. *Id.* Figure 2 of Burfeind, reproduced below, illustrates a network including multiple interconnected entities communicatively coupled to an organization device.

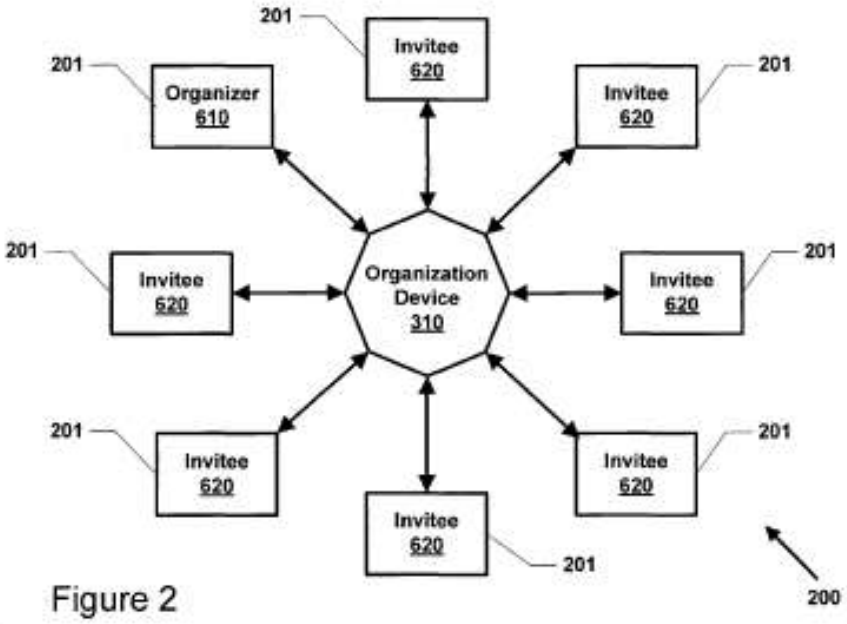

Figure 2 illustrates a schematic of a network including multiple interconnected entities communicatively coupled to an organization device 310. *Id.* ¶¶ 8, 10, 54, 59.

As shown in Figure 2, event participants include event organizer 610 and individuals invited to the event (invitees 620), with event organizer 610 creating an event using organization device 310 and sending invitations to event invitees 620 that employ user devices 210. *Id.* ¶¶ 54, 56. Figure 4 of Burfeind, reproduced below, illustrates organization device 310 in further detail.

Figure 4

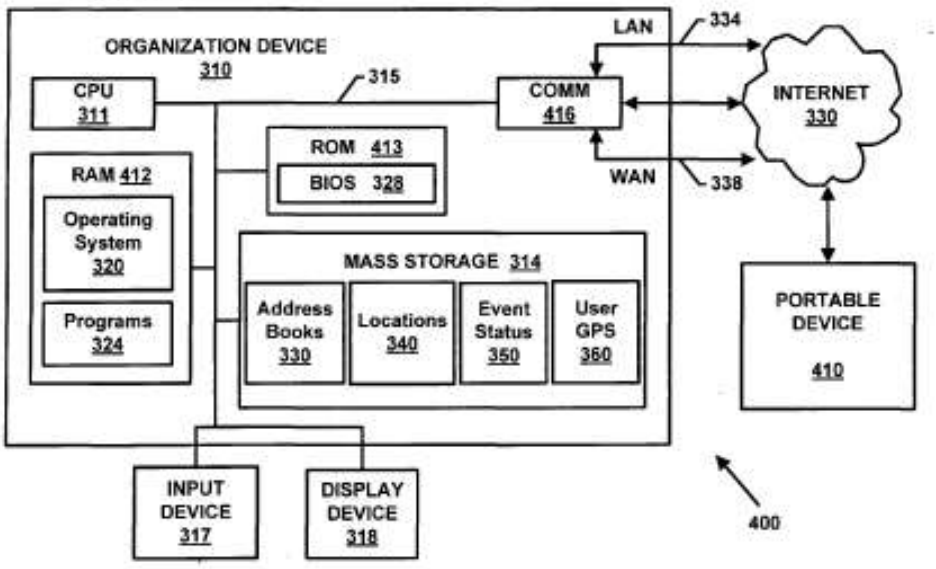

Figure 4 illustrates organization device 310.

As shown in Figure 4, organization device 310 is configured to transmit and receive information and requests for information, to and from user devices 210 and other computing devices (such as a server 240). *Id.* ¶ 55. User devices 210 may be non-portable devices (such as desktop computers) and portable devices (such as cellular phones 41 and personal digital assistants). *Id.* ¶ 56. An event organizer accesses organization device 310 from a user device. *Id.* ¶ 57.

The event organizer may schedule an event and invite participants to the event using organization device 310, which executes a number of processes at the request of the event organizer. *Id.* ¶ 78. The event organizer may request organization device 310 to perform the processes through a series of interfaces displayed on a display screen 318 of organization device 310. *Id.* The event organizer also creates and maintains a contact list/address book of individuals that the event organizer wishes to

invite to an event, and the contact list may be stored in a database (address book database 330). *Id.* ¶ 81. The event organizer also creates and maintains a list of locations at which events can be scheduled, and the locations list may be stored in a database (locations database 330). *Id.* ¶ 99.

The event organizer can access and modify various databases stored on organization device 310, and can create an event and track attendance status of her guests on a cellular phone. *Id.* ¶¶ 147–148, 155. The event organizer creates a new event and invites guests to the event using a user interface. *Id.* ¶ 155. Invited contacts, or multiple contacts in a group, can be selected from a dropdown menu, with invitations sent thereto. *Id.* Thereafter, the event organizer can track the attendance status of the guests. *Id.* ¶¶ 159–160, 162.

2. Crowley

Crowley is titled "Location-Based Social Software for Mobile Devices," and relates to "systems and methods for connecting people to each other, and more particularly to connections of acquaintances for activities such as socialization." Ex. 1005, codes (54), (57), ¶ 2. Crowley discloses a method of establishing connection between users of mobile devices by receiving at a computer a location of a first user from a first mobile device, receiving from a second mobile device a location of a second user having an acquaintance relationship to the first user, and sending a message to the first mobile device based on the proximity of the first user to the second user. *Id.* at code (57). Crowley's Figure 3, reproduced below, is a schematic representation of information flow in a system for providing communication among acquaintances. *Id.* ¶¶ 17, 38.

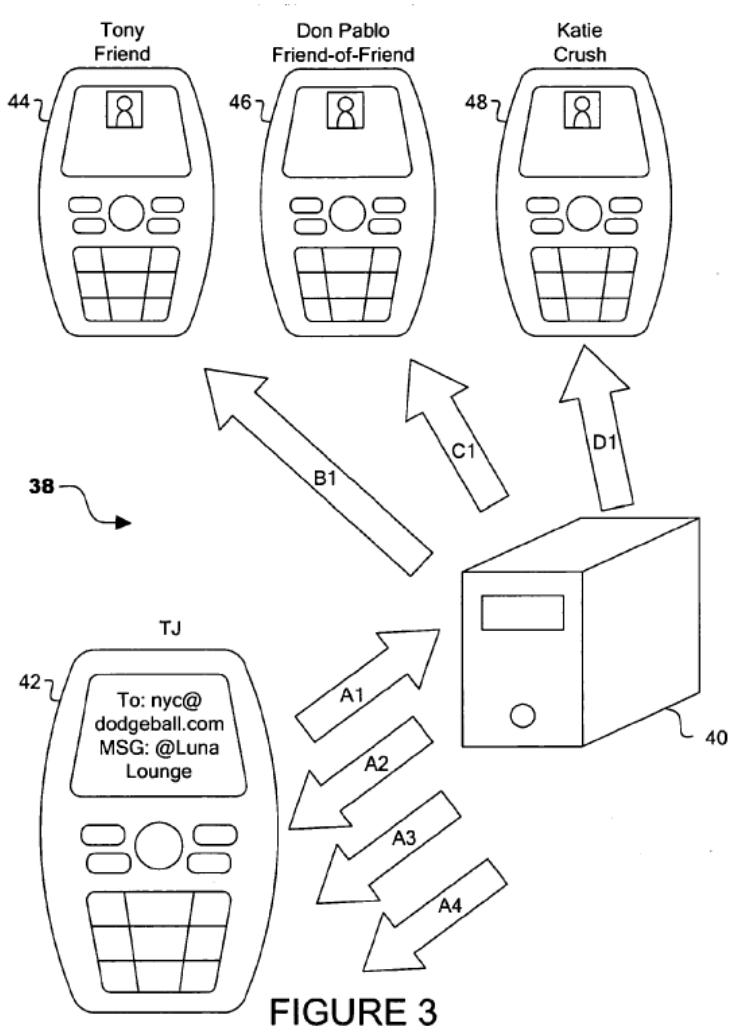

Figure 3 is a schematic representation of information flow in a system for providing communication among acquaintances. *Id.* ¶¶ 17, 38.

In the example in Figure 3, four users, as represented by their mobile devices, have previously established themselves as members of a community. *Id.* ¶ 38. Information flow is bi-directional and constantly changing, so that no user is necessarily a primary user. *Id.* The members "could have a variety of relationships to each other." *Id.* In Figure 3, member TJ 42 enters, opts in, or logs into the system, thereby starting a number of message flows. *Id.* ¶ 40. The other members have already

identified themselves and their locations to the system, and are currently active in the system. *Id.*

In operation, a client first submits a device location, and the server receives that submission. *Id.* ¶ 59. For example, in Figure 3 *supra*, the user sent the message to "nyc@dodgeball.com," thus indicating the user was in New York, and wanted to use functionality of the system dedicated to New York City. *Id.* ¶ 60. The system extracts out of the "from" field identification information about the user, so as to allow access to the user's profile. *Id.* ¶ 61. Such information is needed to determine, for example, who the user's friends are, and what their preferences are. *Id.*

The server may then test for all acquaintances of the client's user who are active in the system, retrieve their location coordinates, and check the first member's location against those other locations (step 72). *Id.* ¶ 64. Friends-of-friends and other similar relationships (e.g., users sharing certain common features in their profiles) can also be identified, and the distance between users may be computed. *Id.* Once a subset of members, which consists of (1) acquaintances, (2) who are active in the system, and (3) are nearby, are identified, the system may then format and transmit appropriate messages to each relevant member (steps 74, 75), as described in, e.g., Figure 3 *supra*. *Id.*

3. <u>Analysis</u>

Below, we address in detail Petitioner's contentions that claims 1–20 would have been obvious in view of Burfeind and Crowley (Pet. 15–51), starting with the contentions with respect to the limitations of independent claims 1 and 11. With respect to each of the limitations, Patent Owner does

not respond.[8] Nonetheless, the burden remains on Petitioner to demonstrate unpatentability. *See Dynamic Drinkware, LLC v. Nat'l Graphics, Inc.*, 800 F.3d 1375, 1378 (Fed. Cir. 2015).

a. Preamble – "providing roll call based information" (claims 1, 11)

Petitioner argues that, "[t]o the extent limiting," Burfeind discloses the preambles. Pet. 22; *see also id.* 36. In particular, Petitioner contends that Burfeind's organization device tracks the attendance status of each event invitee, and also provides to event participants the attendance status of each invitee and other information pertaining to the event. *Id.* at 23 (citing Ex. 1004 ¶ 131, Fig. 2). Thus, according to Petitioner, Burfeind discloses "attendance status (*roll call based information*)" which specifies whether the invitee indicated that the invitee would be attending the event. *Id.* (citing Ex. 1004 ¶ 131; Ex. 1003 ¶¶ 94–95).

Petitioner's unrebutted assertions and explanations are consistent with and supported by the evidence cited by Petitioner. On this record, and by a preponderance of the evidence, Petitioner has shown that the combination of Burfeind and Crowley (and more particularly, Burfeind) teaches "providing roll call based information," as recited in claims 1 and 11.

b. "receiv[ing] an information item from a user device, wherein the information item identifies a situation" (claims 1, 11)

Petitioner contends that Burfeind's organization device (e.g., 310 in Figs. 2 and 4) includes "a *network controller* in the form of a

[8] As noted above, Patent Owner did not file any response to the Petition, and, as a result, the Petitioner's positions on the unpatentability of independent claims 1 and 11 stand unopposed as a part of this trial.

'communication device [(e.g., 416 in Fig. 4)],'" the communication device being "configured to receive *an information item from a user device, wherein the information item identifies a situation*." Pet. 23–24 (citing Ex. 1004 ¶¶ 64–66, 147, Figs. 2, 4; Ex. 1003 ¶¶ 97–102), 36–37. For example, according to Petitioner, Burfeind's organization device receives via the communication device from a user device of an event organizer (e.g., portable device 410 in Figure 4) "'information specifying the time and location of an event' (i.e., *information items identifying a situation*)." *Id.* at 24–25 (citing Ex. 1004 ¶¶ 57, 107, 146, 162, Fig. 4). Petitioner submits that Burfeind's "event"—which may be events of plundering, apple picking, bowling, playoffs, and lawn bowling—is "a *situation* as claimed" as these events are consistent with the '682 patent's disclosure that the situation can be a social event, such as a concert or festival as well as skiing or surfing. *Id.* at 25 (citing Ex. 1004 ¶ 165, Figs. 35, 44; Ex. 1001, 5:1–16, 31:55–60; Ex. 1003 ¶¶ 99–100). Petitioner also identifies interface 1800 in Burfeind, which is displayed on the event organizer's user device and enables the event organizer to create and schedule one or more events and input information identifying the event, such as a name, time, date, and location of the event, as well as individuals to be invited. *Id.* at 25–26 (citing Ex. 1004 ¶¶ 107, 111–114, 146–147, 155–162, Fig. 18). Petitioner contends that "[t]he information input into these fields [of Burfeind's interface] are *information items identifying the* event (*situation*)," as required by claims 1 and 11. *Id.* (citing Ex. 1003 ¶ 101).

On this record, we find Petitioner's unrebutted assertions and explanations (Pet. 23–26, 36) are consistent with and supported by the evidence cited by Petitioner with respect to the above-referenced "receiving"

limitation, i.e., "a network controller configured to: receive an information item from a user device, wherein the information item identifies a situation" (claim 1) and "receiving, at a central server, an information item from a user device, wherein the information item identifies a situation" (claim 11). On this record, and by a preponderance of the evidence, Petitioner has shown that the combination of Burfeind and Crowley teaches the "receiving" limitation recited in claims 1 and 11.

c. "mak[ing] the information item available to a first plurality of user devices" (claims 1, 11)

Petitioner contends that Burfeind's organization device transmits invitations to the event invitees, wherein the invitations "include 'textual information identifying the location, date, and time of the event' (i.e., *information items*) that was provided to the organization device by the event organizer." Pet. 26–27 (citing Ex. 1004 ¶¶ 104, 115–116; Ex. 1003 ¶ 104). According to Petitioner, the invitations are sent via the communication device to user devices of the respective invited individuals, and thus, Burfeind discloses that the "communication device makes the 'event information' (*information items*) included in the invitations available to user devices" which form the claimed "first plurality of user devices" represented by one or more groups of Burfeind's event organizer's contacts in the event organizer's address book. *Id.* at 27–28 (citing Ex. 1004 ¶¶ 89, 108, 159, Figs. 11–13; Ex. 1003 ¶¶ 105–107).

On this record, we find Petitioner's unrebutted assertions and explanations (Pet. 26–28, 36–37) are consistent with and supported by the evidence cited by Petitioner with respect to the above-referenced operation of "making" information available, i.e., "network controller configured to:

. . . make the information item available to a first plurality of user devices" (claim 1) and "making the information item available to a first plurality of user devices" (claim 11). On this record, and by a preponderance of the evidence, Petitioner has shown that the combination of Burfeind and Crowley teaches the "making" information available limitation recited in claims 1 and 11.

d. "verify[ing] that the information item is related to the situation" (claims 1, 11)

Petitioner contends that, upon receiving information from the event organizer's user device, Burfeind's organization device saves the information entered to the organization device. Pet. 28 (citing Ex. 1004 ¶¶ 110, 114, 162). Petitioner submits that Burfeind's organization device stores events using processing unit 311 which is "*a central processing unit* . . . coupled to the communications device (*network controller*) via a system bus 315." *Id.* (citing Ex. 1004 ¶¶ 60, 162, Fig. 4). Further, Petitioner contends Crowley teaches that, when a user sends information relating to an event (e.g., a "venue" location), the system verifies that the information is related to the event by verifying the user and checking to see if the location information is present in the system. *Id.* at 29 (citing Ex. 1005 ¶¶ 59, 62–63, 66; Ex. 1003 ¶¶ 71–73). According to Petitioner, a POSITA would have recognized that Crowley's verification steps ensure that the information provided by the user is related to a valid event, and would have found it obvious to implement Crowley's verification techniques in Burfeind to verify that the information provided by Burfeind's event organizer is related to an event. *Id.* at 29–30 (citing Ex. 1005 ¶¶ 59, 62–63; Ex. 1003 ¶¶ 112–120). That is, a POSITA "would have recognized the benefits of enabling

Burfeind's system to verify the validity of the event information, as taught by Crowley." *Id.* at 30 (citing Ex. 1004 ¶¶ 57, 107, 146, 162; Ex. 1003 ¶¶ 114–118).

On this record, we find Petitioner's unrebutted assertions and explanations (Pet. 28–30, 36–37) are consistent with and supported by the evidence cited by Petitioner with respect to the above-referenced "verifying" limitation, i.e., "a central processing unit, coupled to the network controller, configured to verify that the information item is related to the situation" (claim 1) and "verifying that the information item is related to the situation" (claim 11). On this record, and by a preponderance of the evidence, Petitioner has shown that the combination of Burfeind and Crowley teaches the "verifying" limitation recited in claims 1 and 11.

e. "in response to the verifying, mak[ing] a message board related to the situation available to a second plurality of user devices" (claims 1, 11)

Petitioner contends that, in Burfeind, the invitees that are invited to an event by the organization device transmit a response including a participation status of the invitee to the organization device, and the organization device then "provides the participation statuses within an 'event status interface' (i.e., *message board*), and provides the event status interface to the invited participants' user devices." Pet. 31–33 (citing Ex. 1004 ¶¶ 4–5, 117, 131, 137, 169, Fig. 36 (showing an event status interface 3600 for a game event named "Plundering"); Ex. 1003 ¶¶ 125–126). Petitioner submits that the event status interface in Burfeind is "a *message board related to the situation*" because the event status interface includes participants' comments on the event, "participation status" of the invitees, and invitees' messages that communicate further information relating to the invitee's attendance at

the event. *Id.* at 33 (citing Ex. 1004 ¶¶ 134–135, 138, 170, 174; Ex. 1003 ¶ 126). Petitioner then contends that, in the combined system of Burfeind and Crowley, the provision of the event status interface would be "in response to the verifying" because the organization device would provide the event status interface "upon verifying that the information items are related to a valid event." *Id.* at 31 (citing Ex. 1003 ¶ 124). That is, the organization device "would only create an event and provide the event status interface in response to verifying that the event information was related to a valid event, in accordance with Crowley's teachings." *Id.*

Furthermore, Petitioner contends that Burfeind's event organizer can invite multiple groups of contacts, such as "a first group and a second group." Pet. 33 (citing Ex. 1004 ¶¶ 89, 159; Ex. 1003 ¶ 127). Petitioner contends that participants invited to the event that are provided the event status interface, include "a *second plurality of user devices*," while a first group of invited contacts form "the *first plurality of user devices*." *Id.* (citing Ex. 1004 ¶¶ 89, 159; Ex. 1003 ¶ 127). Petitioner further contends that the combination of Burfeind and Crowley teaches "inviting a group of contacts (i.e., corresponding to a *second plurality of user devices*) who are geographically proximate to the event." *Id.* Thus, according to Petitioner, in providing the event status interface to the invited participants, in the combined teachings, the organization device "invites and makes the event status interface available to the user devices of the second group (i.e., *second plurality of user devices*, which are geographically proximate to the event)." *Id.* at 33–34 (citing Ex. 1004 ¶¶ 131, 137, 169, Figs. 26, 36; Ex. 1003 ¶¶ 127–129).

On this record, we find Petitioner's unrebutted assertions and explanations (Pet. 31–34, 36–37) are consistent with and supported by the evidence cited by Petitioner with respect to the above-referenced "message board" limitation, i.e., "in response to the verifying, make a message board related to the situation available to a second plurality of user devices" (claim 1) and "in response to the verifying, making a message board related to the situation available to a second plurality of user devices" (claim 11). On this record, and by a preponderance of the evidence, Petitioner has shown that the combination of Burfeind and Crowley teaches the "message board" limitation recited in claims 1 and 11.

f. "wherein the second plurality of user devices was identified based on the second plurality of user devices being geographically proximate to the situation" (claims 1, 11)

Petitioner contends that Burfeind tracks user locations to determine "arrival information" for the users, and thus, Burfeind determines users' proximity to the event location. Pet. 34 (citing Ex. 1004 ¶¶ 131, 136, 138, 143–145, 169–171, Fig. 36). Petitioner then contends that Crowley provides "explicit disclosure" that users are invited to the event based on their proximity. *Id.* (citing Ex. 1005 ¶ 45; Ex. 1003 ¶¶ 71–73, 130–131). Petitioner discusses an example provided by Crowley in which a user "TJ" is located at a bar called the "Luna Lounge," where the system identifies which of TJ's acquaintances is near the Luna Lounge, and the system then sends each of the acquaintances messages inviting them to meet TJ at the Luna Lounge. *Id.* (citing Ex. 1005 ¶ 45). According to Petitioner, the combination of Burfeind and Crowley teaches "automatically sending invitations to a group of contacts (i.e., *second plurality of user devices*) that

are geographically proximate the event location." *Id.* at 34–35 (citing Ex. 1005 ¶¶ 45, 78; Ex. 1003 ¶¶ 131–132).

On this record, we find Petitioner's unrebutted assertions and explanations (Pet. 34–37) are consistent with and supported by the evidence cited by Petitioner with respect to the above-referenced limitation, i.e., "wherein the second plurality of user devices was identified based on the second plurality of user devices being geographically proximate to the situation" (claims 1 and 11). On this record, and by a preponderance of the evidence, Petitioner has shown that the combination of Burfeind and Crowley teaches this limitation recited in claims 1 and 11.

g. "wherein the message board comprises a roll call list that includes status responses to roll call queries that were provided to the second plurality of user devices in order to solicit the status responses" (claims 1, 11)

Petitioner contends that Burfeind's event status interface is a "*message board*," wherein the message board comprises a "*roll call list* that specifies the participation statuses (*status responses*) of the invited participants (e.g., whether they will be attending the event)." Pet. 35 (citing Ex. 1004 ¶¶ 117–119, 131, 134, 138; Ex. 1003 ¶ 133). According to Petitioner, in Burfeind, upon receiving an invitation from the organization device, participants provide a response to the invitation by transmitting their respective participation statuses to the organization device. *Id.* at 35–36 (citing Ex. 1004 ¶¶ 52, 117, 131, 133–134, 138, 199; Ex. 1003 ¶ 134). Thus, Petitioner contends that Burfeind's "invitations" comprise "*roll call queries*" that are "*provided to the second plurality of user devices in order to solicit* the participation statuses (*status responses*) of the invited participants." *Id.* (citing Ex. 1003 ¶ 134).

On this record, we find Petitioner's unrebutted assertions and explanations (Pet. 35–37) are consistent with and supported by the evidence cited by Petitioner with respect to the "roll call list" limitation, i.e., "wherein the message board comprises a roll call list that includes status responses to roll call queries that were provided to the second plurality of user devices in order to solicit the status responses" (claims 1 and 11). On this record, and by a preponderance of the evidence, Petitioner has shown that the combination of Burfeind and Crowley teaches the "roll call list" limitation recited in claims 1 and 11.

h. Dependent claims 2–10 and 12–20

Claims 2–10 depend directly or indirectly from claim 1, and claims 12–20 depend directly or indirectly from claim 11. Ex. 1001, 34:39–67, 35:1–11, 35:31–36, 36:1–34. Hence, claims 2–10 incorporate all of claim 1's limitations, and claims 12–20 incorporate all of claim 11's limitations. *See* 35 U.S.C. § 112 ¶ 4.

Petitioner provides detailed explanations as to how the combination of Burfeind and Crowley teaches the limitations recited in dependent claims 2–10 and 12–20, citing Dr. Cooperstock's testimony for support. Pet. 37–51 (citing Ex. 1004 ¶¶ 54, 57, 60, 107, 109–113, 136–139, 146–147, 162, 170–174, 185, 197–201, Figs. 2, 18, 36, 44; Ex. 1003 ¶¶ 137–138, 140–143, 145–149, 151–152, 154–155, 157, 159–160, 162–163).

Because Patent Owner has not filed any response to the Petition, the Petitioner's positions on the unpatentability of dependent claims 2–10 and 12–20 also stand unopposed as a part of this trial. Nonetheless, as discussed above, the burden remains on Petitioner to demonstrate unpatentability. *See Dynamic Drinkware*, 800 F.3d at 1378.

We have reviewed Petitioner's explanations and supporting evidence regarding the limitations of claims 2–10 and 12–20. Based on the record during trial, we conclude that Petitioner has demonstrated by a preponderance of the evidence that combination of Burfeind and Crowley also teaches all limitations recited in dependent claims 2–10 and 12–20.

i. Combination of Burfeind and Crowley

Petitioner further provides detailed explanations as to why a POSITA would have found it obvious to combine the teachings of Burfeind and Crowley (Pet. 15–22), citing Dr. Cooperstock's supporting testimony (Ex. 1003). In particular, Petitioner posits that a POSITA would have sought references for improving upon "Burfeind's burdensome and imprecise manual participant selection process," wherein Crowley is such a reference. Pet. 17–18 (citing Ex. 1005, Abstract, ¶¶ 4, 7–8, 45; Ex. 1003 ¶¶ 81–82). Petitioner contends that Crowley's system provides numerous advantages, such as "enabling 'spontaneous socializing' and 'convenient communication among friends,'" and "help[s] avoid the problem of friends who were out near each other, but never realized it until later." *Id.* at 18–19 (citing Ex. 1005 ¶¶ 6, 35). According to Petitioner, "Crowley thus provides express motivation for implementing its location-based features in Burfeind." *Id.* at 19 (citing Ex. 1003 ¶¶ 84–86).

Petitioner further contends that a POSITA would have a reasonable expectation of success in implementing the features of Crowley in Burfeind. Pet. 19 (citing Ex. 1003 ¶ 89–92). In particular, a POSITA would have readily been able to adapt Crowley's location-tracking features "to identify user locations for the purpose of inviting individuals who are located near the event location." *Id.* (citing Ex. 1003 ¶¶ 89–90). According to Petitioner,

Burfeind and Crowley disclose similar systems for organizing meetings between individuals (*id.* at 22 (citing Ex. 1004, Abstract; Ex. 1005 ¶ 5)), and because Burfeind "already contemplates techniques for grouping individuals in order to more conveniently select those individuals," a POSITA "would have thus readily been able to modify Burfeind to determine the event organizer's contacts that are located proximate to selected event venue." *Id.* at 21–22 (citing Ex. 1003 ¶¶ 89–92).

Thus, according to Petitioner, the POSITA:

> would have understood that implementing Crowley's techniques in Burfeind would merely amount to the use of a known technique (Crowley's location-based messaging) to improve similar systems in the same way (enabling the system to automatically send messages/invitations to nearby individuals), as well as applying a known technique to a known system ready for improvement to yield predictable results.

Pet. 22 (citing Ex. 1003 ¶ 93).

Because Patent Owner has not filed any response to the Petition, the Petitioner's positions on combining the teachings of Crowley to Burfeind stand unopposed as a part of this trial. However, as discussed above, the burden remains on Petitioner to demonstrate unpatentability. *See Dynamic Drinkware*, 800 F.3d at 1378.

We have reviewed Petitioner's explanations and supporting evidence regarding Petitioner's proffered reasoning to combine the references, and we agree with and adopt them as our own. Based on the complete record presented, we determine that Petitioner has persuasively shown that a person of ordinary skill in the art would have combined Burfeind and Crowley as proffered in the Petition.

j. Conclusion

In light of the above analysis, we determine that Petitioner's evidence and arguments are sufficient to demonstrate, by a preponderance of the evidence, that claims 1–20 under Ground 1 would have been obvious over the combination of Burfeind and Crowley, and that Petitioner has provided articulated reasoning with rational underpinnings that would support a conclusion of obviousness.

E. Claims 1–8 and 11–18 as Obvious over Smith and Sinha (Petitioner's styled Ground 2); and Claims 9, 10, 19, and 20 as Obvious over Smith, Sinha, and Gage (Petitioner's styled Ground 3)

Petitioner also contends that claims 1–8 and 11–18 of the '682 patent would have been obvious in view of Smith and Sinha (Ground 2), and that claims 9, 10, 19, and 20 would have been obvious in view of Smith, Sinha and Gage (Ground 3). Pet. 51–83. Because the Burfeind-Crowley ground (Ground 1) is dispositive as to all challenged claims 1–20 (*see supra* § II.D.3), we do not reach Petitioner's challenge of claims 1–8 and 11–18 based on obviousness over Smith and Sinha (Ground 2) and claims 9, 10, 19, and 20 based on obviousness over Smith, Sinha, and Gage (Ground 3). *See SAS Inst. Inc. v. Iancu*, 138 S. Ct. 1348, 1359 (2018) (holding a petitioner "is entitled to a final written decision addressing all of the claims it has challenged"); *Bos. Sci. Scimed, Inc. v. Cook Grp. Inc.*, 809 F. App'x 984, 990 (Fed. Cir. 2020) (non-precedential) (recognizing that "[t]he Board has the discretion to decline to decide additional instituted grounds once the petitioner has prevailed on all its challenged claims").

III. CONCLUSION[9]

For the foregoing reasons, we determine on the record at hand that Petitioner has demonstrated by a preponderance of the evidence that challenged claims 1–20 of the ’682 patent are unpatentable.

Claims	**35 U.S.C. §**	**Reference(s)/Basis**	**Claims Shown Unpatentable**	**Claims Not Shown Unpatentable**
1–20	103	Burfeind, Crowley	1–20	
1–8, 11–18	103	Smith, Sinha[10]		
9, 10, 19, 20	103	Smith, Sinha, Gage[11]		
Overall Outcome			1–20	

[9] Should Patent Owner wish to pursue amendment of the challenged claims in a reissue or reexamination proceeding subsequent to the issuance of this decision, we draw Patent Owner’s attention to the April 2019 Notice Regarding Options for Amendments by Patent Owner Through Reissue or Reexamination During a Pending AIA Trial Proceeding. *See* 84 Fed. Reg. 16,654 (Apr. 22, 2019). If Patent Owner chooses to file a reissue application or a request for reexamination of the challenged patent, we remind Patent Owner of its continuing obligation to notify the Board of any such related matters in updated mandatory notices. See 37 C.F.R. § 42.8(a)(3), (b)(2).

[10] We do not reach this ground because we have determined challenged claims 1–8, and 11–18 to be unpatentable under another ground. *See supra* § II.D.3.

[11] We do not reach this ground because we have determined challenged claims 9, 10, 19, and 20 to be unpatentable under another ground. *See supra* § II.D.3.

IV. ORDER

For the reasons given, it is

ORDERED that, based on the preponderance of the evidence, claims 1–20 of the ’682 patent have been shown to be unpatentable; and

FURTHER ORDERED that, because this is a final written decision, parties to this proceeding seeking judicial review of our decision must comply with the notice and service requirements of 37 C.F.R. § 90.2.

For PETITIONER:

Jonathan Tuminaro
Michael Specht
David Haars
STERNE, KESSLER, GOLDSTEIN & FOX PLLC
jtuminar-ptab@sternekessler.com
mspecht-ptab@sternekessler.com
dhaars-ptab@sternekessler.com

For PATENT OWNER:

David Hecht
James Zak
HECHT PARTNERS LLP
dhecht@hechtpartners.com
zakx0017@umn.edu