US007801971B1

(12) **United States Patent**
Amidon et al.

(10) **Patent No.: US 7,801,971 B1**
(45) **Date of Patent: Sep. 21, 2010**

(54) **SYSTEMS AND METHODS FOR DISCOVERING, CREATING, USING, AND MANAGING SOCIAL NETWORK CIRCUITS**

(75) Inventors: **Christopher Amidon**, Apex, NC (US); **Alfredo Issa**, Apex, NC (US); **Richard Walsh**, Raleigh, NC (US)

(73) Assignee: **Qurio Holdings, Inc.**, Raleigh, NC (US)

(*) Notice: Subject to any disclaimer, the term of this patent is extended or adjusted under 35 U.S.C. 154(b) by 634 days.

(21) Appl. No.: **11/526,955**

(22) Filed: **Sep. 26, 2006**

(51) **Int. Cl.**
G06F 15/06 (2006.01)

(52) **U.S. Cl.** **709/217**; 726/3; 709/200

(58) **Field of Classification Search** 709/217
See application file for complete search history.

(56) **References Cited**

U.S. PATENT DOCUMENTS

5,220,657	A	6/1993	Bly et al.
5,517,617	A	5/1996	Sathaye et al.
5,629,980	A	5/1997	Stefik et al.
5,717,923	A	2/1998	Dedrick
5,749,081	A	5/1998	Whiteis
5,754,939	A	5/1998	Herz et al.
5,867,799	A	2/1999	Lang et al.
5,884,035	A	3/1999	Butman et al.
5,948,040	A	9/1999	DeLorme et al.
5,983,214	A	11/1999	Lang et al.
6,073,119	A	6/2000	Bornemisza-Wahr et al.
6,073,138	A	6/2000	de I'Etraz et al.
6,088,702	A	7/2000	Plantz et al.
6,092,049	A	7/2000	Chislenko et al.
6,149,441	A	11/2000	Pellegrino et al.
6,151,624	A	11/2000	Teare et al.
6,195,696	B1	2/2001	Baber et al.
6,260,069	B1	7/2001	Anglin

(Continued)

FOREIGN PATENT DOCUMENTS

EP	1177056	A2	1/2001

(Continued)

OTHER PUBLICATIONS

No Author, "pidgin," (website), obtained Jul. 13, 2007, 1 page, http://pidgin.im/.

(Continued)

Primary Examiner—Wing F Chan
Assistant Examiner—Andrew Woo
(74) *Attorney, Agent, or Firm*—Withrow & Terranova, PLLC

(57) **ABSTRACT**

A social network circuit includes two or more members of a social network in live communication with one another. Systems and methods of administering social network circuits include computing devices configured to determine the existence and extent of social network circuits. Client applications associated with computing devices used by each member may be configured to provide one or more servers with session data indicating the existence of live communication links. Based on the session data, the server(s) may track one or more social network circuits. Data representing the circuits may be provided to the clients in the circuits. Clients may selectively participate in social network circuits based on user- and system-provided parameters. For example, a subset of social network users in active communication may be further divided into a particular social network circuit devoted to a particular topic of discussion. Users may participate in multiple social network circuits at any given time.

12 Claims, 4 Drawing Sheets

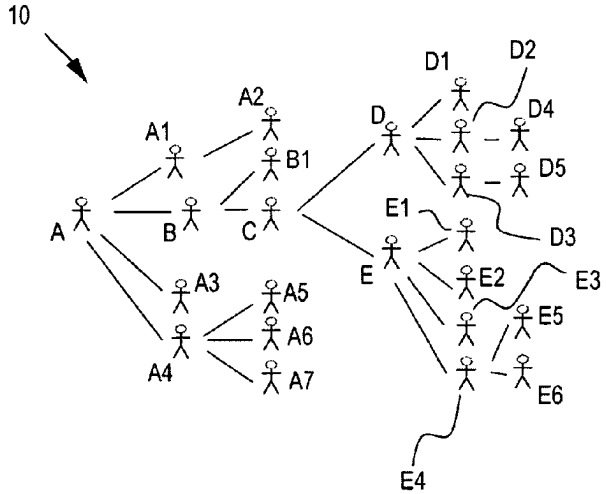

Meta EX1008
Meta v. SitNet
IPR2026-00101

U.S. PATENT DOCUMENTS

6,275,819	B1	8/2001	Carter
6,308,175	B1	10/2001	Lang et al.
6,311,194	B1	10/2001	Sheth et al.
6,314,409	B2	11/2001	Schneck et al.
6,327,590	B1	12/2001	Chidlovskii et al.
6,338,086	B1	1/2002	Curtis et al.
6,374,290	B1	4/2002	Scharber et al.
6,385,619	B1	5/2002	Eichstaedt et al.
6,389,409	B1	5/2002	Horovitz et al.
6,389,541	B1	5/2002	Patterson
6,421,439	B1	7/2002	Liffick
6,438,579	B1	8/2002	Hosken
6,442,693	B1	8/2002	Sandgren et al.
6,463,433	B1	10/2002	Baclawski
6,480,885	B1	11/2002	Olivier
6,493,703	B1	12/2002	Knight et al.
6,498,795	B1	12/2002	Zhang et al.
6,519,629	B2	2/2003	Harvey et al.
6,525,747	B1	2/2003	Bezos
6,526,411	B1	2/2003	Ward
6,539,375	B2	3/2003	Kawasaki
6,553,108	B1	4/2003	Felger
6,553,367	B2	4/2003	Horovitz et al.
6,560,578	B2	5/2003	Eldering
6,567,122	B1	5/2003	Anderson et al.
6,581,072	B1	6/2003	Mathur et al.
6,594,693	B1	7/2003	Borwankar
6,606,644	B1	8/2003	Ford et al.
6,629,100	B2	9/2003	Morris et al.
6,630,944	B1	10/2003	Kakuta et al.
6,631,098	B2	10/2003	Chang et al.
6,651,086	B1	11/2003	Manber et al.
6,654,735	B1	11/2003	Eichstaedt et al.
6,687,732	B1	2/2004	Bector et al.
6,701,362	B1	3/2004	Subramonian et al.
6,745,178	B1	6/2004	Emens et al.
6,748,420	B1	6/2004	Quatrano et al.
6,757,517	B2	6/2004	Chang
6,772,160	B2	8/2004	Cho et al.
6,785,704	B1	8/2004	McCanne
6,816,906	B1	11/2004	Icken et al.
6,832,245	B1	12/2004	Isaacs et al.
6,839,680	B1	1/2005	Liu et al.
6,859,807	B1	2/2005	Knight et al.
6,917,944	B1	7/2005	Prasad et al.
6,957,193	B2	10/2005	Stefik et al.
6,959,290	B2	10/2005	Stefik et al.
6,970,444	B2	11/2005	Chwieseni et al.
6,970,840	B1	11/2005	Yu et al.
6,980,993	B2	12/2005	Horvitz et al.
6,988,096	B2	1/2006	Gupta et al.
6,988,127	B2	1/2006	Matsuda et al.
6,993,564	B2	1/2006	Whitten, II
7,016,307	B2	3/2006	Vasudev et al.
7,024,391	B2	4/2006	Burich
7,039,639	B2	5/2006	Brezin et al.
7,043,644	B2	5/2006	DeBruine
7,047,202	B2	5/2006	Jaipuria et al.
7,047,406	B2	5/2006	Schleicher et al.
7,051,003	B1	5/2006	Kobata et al.
7,054,900	B1	5/2006	Goldston
7,058,606	B2	6/2006	Stefik et al.
7,058,897	B2	6/2006	Matsuda
7,069,308	B2	6/2006	Abrams
7,103,634	B1	9/2006	Ullmann et al.
7,107,317	B2	9/2006	Demsky et al.
7,117,254	B2	10/2006	Lunt et al.
7,120,681	B2	10/2006	Frelechoux et al.
7,124,164	B1	10/2006	Chemtob
7,142,856	B2	11/2006	Barrow
7,150,030	B1	12/2006	Eldering et al.
7,188,140	B1	3/2007	Greenspan et al.
RE39,717	E	7/2007	Yates et al.
7,302,429	B1	11/2007	Wanker
7,328,242	B1	2/2008	McCarthy et al.
7,359,894	B1	4/2008	Liebman et al.
7,370,015	B2	5/2008	Gvily
2001/0007099	A1	7/2001	Rau et al.
2001/0042043	A1	11/2001	Shear et al.
2002/0032634	A1	3/2002	Abrams et al.
2002/0032905	A1	3/2002	Sherr et al.
2002/0052885	A1	5/2002	Levy
2002/0057284	A1	5/2002	Dalby et al.
2002/0077985	A1	6/2002	Kobata et al.
2002/0078206	A1	6/2002	Boies et al.
2002/0091556	A1	7/2002	Fiala et al.
2002/0091667	A1	7/2002	Jaipuria et al.
2002/0091975	A1	7/2002	Redlich et al.
2002/0116466	A1	8/2002	Trevithick et al.
2002/0124053	A1	9/2002	Adams et al.
2002/0138744	A1	9/2002	Schleicher et al.
2002/0152322	A1	10/2002	Hay
2002/0156875	A1	10/2002	Pabla
2002/0156893	A1	10/2002	Pouyoul et al.
2002/0156917	A1	10/2002	Nye
2002/0169737	A1	11/2002	Armstrong et al.
2002/0178164	A1	11/2002	Wisniewski
2003/0002521	A1	1/2003	Traversat et al.
2003/0009423	A1	1/2003	Wang et al.
2003/0014482	A1	1/2003	Toyota et al.
2003/0018582	A1	1/2003	Yaacovi
2003/0018968	A1	1/2003	Avnet
2003/0028596	A1	2/2003	Toyota et al.
2003/0028639	A1	2/2003	Yamamoto et al.
2003/0046587	A1	3/2003	Bheemarasetti et al.
2003/0050976	A1	3/2003	Block et al.
2003/0050977	A1	3/2003	Puthenkulam et al.
2003/0061282	A1	3/2003	Ebata et al.
2003/0061287	A1	3/2003	Yu et al.
2003/0078858	A1	4/2003	Angelopoulos et al.
2003/0079120	A1	4/2003	Hearn et al.
2003/0084162	A1	5/2003	Johnson et al.
2003/0093520	A1	5/2003	Beesley
2003/0101449	A1	5/2003	Bentolila et al.
2003/0105812	A1	6/2003	Flowers, Jr. et al.
2003/0112823	A1	6/2003	Collins et al.
2003/0120662	A1	6/2003	Vishik
2003/0120680	A1	6/2003	Agrawal et al.
2003/0120928	A1	6/2003	Cato et al.
2003/0135576	A1	7/2003	Bodin
2003/0163597	A1	8/2003	Hellman et al.
2003/0167324	A1	9/2003	Farnham et al.
2003/0171941	A1	9/2003	Kraenzel et al.
2003/0172034	A1	9/2003	Schneck et al.
2003/0179228	A1	9/2003	Schreiber et al.
2003/0191814	A1	10/2003	Tran
2003/0195851	A1	10/2003	Ong
2003/0195924	A1	10/2003	Franke et al.
2003/0200190	A1	10/2003	Adar et al.
2003/0204605	A1	10/2003	Hudson et al.
2003/0220975	A1	11/2003	Malik
2003/0220980	A1	11/2003	Crane
2003/0234859	A1	12/2003	Malzbender et al.
2004/0003090	A1	1/2004	Deeds
2004/0015553	A1	1/2004	Griffin et al.
2004/0019846	A1	1/2004	Castellani et al.
2004/0024720	A1	2/2004	Fairweather
2004/0024892	A1	2/2004	Creswell et al.
2004/0031058	A1	2/2004	Reisman
2004/0032393	A1	2/2004	Brandenberg et al.
2004/0039913	A1	2/2004	Kruse
2004/0044727	A1	3/2004	Abdelaziz et al.
2004/0044774	A1	3/2004	Mangalik et al.
2004/0054723	A1	3/2004	Dayal et al.

2004/0059705 A1 3/2004 Wittke
2004/0064416 A1 4/2004 Peled et al.
2004/0064568 A1 4/2004 Arora et al.
2004/0064693 A1 4/2004 Pabla et al.
2004/0073659 A1 4/2004 Rajsic et al.
2004/0088325 A1 5/2004 Elder et al.
2004/0103044 A1 5/2004 Vandewater et al.
2004/0122822 A1 6/2004 Thompson et al.
2004/0122855 A1 6/2004 Ruvolo et al.
2004/0122958 A1 6/2004 Wardrop
2004/0137882 A1 7/2004 Forsyth
2004/0148275 A1 7/2004 Achlioptas
2004/0148434 A1 7/2004 Matsubara et al.
2004/0148503 A1 7/2004 Sidman
2004/0148523 A1 7/2004 Lambert
2004/0162871 A1 8/2004 Pabla et al.
2004/0181487 A1 9/2004 Hanson
2004/0193680 A1 9/2004 Gibbs et al.
2004/0205358 A1 10/2004 Erickson
2004/0210535 A1 10/2004 Erickson
2004/0215793 A1 10/2004 Ryan et al.
2004/0220893 A1 11/2004 Spivazk et al.
2004/0237045 A1 11/2004 Meltzer
2004/0249768 A1 12/2004 Kontio et al.
2004/0260968 A1 12/2004 Edwards et al.
2004/0267625 A1 12/2004 Feng et al.
2005/0015357 A1 1/2005 Shahidi
2005/0021096 A1 1/2005 Mower
2005/0021398 A1 1/2005 McCleskey et al.
2005/0031096 A1 2/2005 Postrel
2005/0034107 A1 2/2005 Kendall et al.
2005/0044361 A1 2/2005 Chang et al.
2005/0044411 A1 2/2005 Somin et al.
2005/0047573 A1 3/2005 Cameron et al.
2005/0076365 A1 4/2005 Popov et al.
2005/0091289 A1 4/2005 Shappell et al.
2005/0091316 A1 4/2005 Ponce et al.
2005/0094313 A1 5/2005 Kim
2005/0097170 A1 5/2005 Zhu et al.
2005/0114672 A1 5/2005 Duncan et al.
2005/0114783 A1 5/2005 Szeto
2005/0131762 A1 6/2005 Bharat et al.
2005/0138430 A1 6/2005 Landsman
2005/0149621 A1 7/2005 Kirkland et al.
2005/0154701 A1 7/2005 Parunak et al.
2005/0159970 A1 7/2005 Buyukkokten et al.
2005/0159998 A1 7/2005 Buyukkokten et al.
2005/0163135 A1 7/2005 Hopkins
2005/0165726 A1 7/2005 Kawell, Jr. et al.
2005/0171799 A1 8/2005 Hull et al.
2005/0171832 A1 8/2005 Hull et al.
2005/0171954 A1 8/2005 Hull et al.
2005/0171955 A1 8/2005 Hull et al.
2005/0172001 A1 8/2005 Zaner et al.
2005/0172116 A1 8/2005 Burch et al.
2005/0177385 A1 8/2005 Hull et al.
2005/0177614 A1* 8/2005 Bourne 709/200
2005/0195978 A1 9/2005 Babic et al.
2005/0197846 A1 9/2005 Pezaris et al.
2005/0198031 A1 9/2005 Pezaris et al.
2005/0198131 A1 9/2005 Appelman et al.
2005/0198172 A1 9/2005 Appelman et al.
2005/0198290 A1 9/2005 Berkey et al.
2005/0198305 A1 9/2005 Pezaris et al.
2005/0201290 A1 9/2005 Vasudev et al.
2005/0203801 A1* 9/2005 Morgenstern et al. 705/14
2005/0203892 A1 9/2005 Wesley et al.
2005/0204038 A1 9/2005 Medvinsky et al.
2005/0207545 A1 9/2005 Gao et al.
2005/0209999 A1 9/2005 Jou
2005/0210104 A1 9/2005 Torvinen
2005/0210387 A1 9/2005 Alagappan et al.
2005/0210409 A1 9/2005 Jou
2005/0215660 A1 9/2005 Tomikawa et al.
2005/0216300 A1 9/2005 Appelman et al.
2005/0216550 A1 9/2005 Paseman et al.
2005/0226511 A1 10/2005 Short
2005/0229243 A1 10/2005 Svendsen et al.
2005/0232423 A1 10/2005 Horvitz et al.
2005/0234864 A1 10/2005 Shapiro
2005/0235062 A1 10/2005 Lunt et al.
2005/0240773 A1 10/2005 Hilbert et al.
2005/0243736 A1 11/2005 Faloutsos et al.
2005/0246420 A1 11/2005 Little, II
2005/0251553 A1 11/2005 Gottfried
2005/0251675 A1 11/2005 Marcjan et al.
2005/0256866 A1 11/2005 Lu et al.
2005/0256909 A1 11/2005 Aboulhosn et al.
2005/0262162 A1 11/2005 Levy
2005/0262199 A1 11/2005 Chen et al.
2005/0262530 A1 11/2005 Ruetschi et al.
2005/0266835 A1 12/2005 Agrawal et al.
2005/0267766 A1 12/2005 Galbreath et al.
2005/0267940 A1 12/2005 Galbreath et al.
2005/0268329 A1* 12/2005 Lee et al. 726/3
2005/0283497 A1 12/2005 Nurminen et al.
2005/0289648 A1 12/2005 Grobman et al.
2006/0004703 A1 1/2006 Spivack et al.
2006/0004789 A1 1/2006 Lunt et al.
2006/0004892 A1 1/2006 Lunt et al.
2006/0010225 A1 1/2006 Issa
2006/0015588 A1 1/2006 Achlioptas et al.
2006/0020960 A1 1/2006 Relan et al.
2006/0021009 A1 1/2006 Lunt
2006/0026235 A1 2/2006 Schwarz et al.
2006/0031489 A1 2/2006 Marcjan
2006/0031770 A1 2/2006 McMenamin
2006/0035766 A1 2/2006 Towley, III et al.
2006/0036641 A1 2/2006 Brydon et al.
2006/0036766 A1 2/2006 Baupin
2006/0042483 A1 3/2006 Work et al.
2006/0047839 A1 3/2006 Tate et al.
2006/0048059 A1 3/2006 Etkin
2006/0048132 A1 3/2006 Chen et al.
2006/0053380 A1 3/2006 Spataro et al.
2006/0058025 A1 3/2006 Barrow
2006/0059571 A1 3/2006 Chen et al.
2006/0063552 A1 3/2006 Tillet et al.
2006/0064431 A1 3/2006 Kishore et al.
2006/0074863 A1 4/2006 Kishore et al.
2006/0079260 A1 4/2006 Tillet et al.
2006/0080432 A1 4/2006 Spataro et al.
2006/0085248 A1 4/2006 Arnett et al.
2006/0085818 A1 4/2006 Bodlaender et al.
2006/0089913 A1 4/2006 Jaipuria et al.
2006/0090137 A1 4/2006 Cheng et al.
2006/0095471 A1 5/2006 Krikorian et al.
2006/0095514 A1 5/2006 Wang et al.
2006/0095792 A1 5/2006 Hurtado et al.
2006/0095976 A1 5/2006 Torres et al.
2006/0107286 A1 5/2006 Connor et al.
2006/0112111 A1 5/2006 Tseng et al.
2006/0117090 A1 6/2006 Schellingerhout et al.
2006/0117378 A1 6/2006 Tam et al.
2006/0121987 A1* 6/2006 Bortnik et al. 463/42
2006/0121988 A1 6/2006 Reville et al.
2006/0123127 A1 6/2006 Littlefield
2006/0136419 A1 6/2006 Brydon et al.
2006/0136551 A1 6/2006 Amidon et al.
2006/0143067 A1 6/2006 Calabria
2006/0143068 A1 6/2006 Calabria
2006/0143084 A1 6/2006 Donnelli et al.
2006/0143183 A1 6/2006 Goldberg et al.
2006/0143236 A1 6/2006 Wu
2006/0146765 A1 7/2006 Van De Sluis et al.
2006/0155813 A1 7/2006 Dietz et al.

2006/0161553	A1	7/2006	Woo	
2006/0167804	A1	7/2006	Aydar et al.	
2006/0167855	A1	7/2006	Ishikawa et al.	
2006/0173838	A1	8/2006	Garg et al.	
2006/0173957	A1	8/2006	Robinson et al.	
2006/0173963	A1	8/2006	Roseway et al.	
2006/0173985	A1	8/2006	Moore	
2006/0184464	A1*	8/2006	Tseng et al.	706/14
2006/0184997	A1	8/2006	La Rotonda et al.	
2006/0190524	A1	8/2006	Bethke et al.	
2006/0190536	A1	8/2006	Strong et al.	
2006/0195441	A1	8/2006	Julia et al.	
2006/0195462	A1	8/2006	Rogers	
2006/0200434	A1	9/2006	Flinn et al.	
2006/0200435	A1	9/2006	Flinn et al.	
2006/0209727	A1	9/2006	Jennings, III et al.	
2006/0209797	A1	9/2006	Anisimov et al.	
2006/0218153	A1	9/2006	Voon et al.	
2006/0218225	A1*	9/2006	Hee Voon et al.	709/201
2006/0218286	A1	9/2006	Brombal et al.	
2006/0218577	A1	9/2006	Goodman et al.	
2006/0242581	A1	10/2006	Manion et al.	
2006/0248122	A1	11/2006	Nikiel et al.	
2006/0248573	A1	11/2006	Pannu et al.	
2006/0259957	A1	11/2006	Tam et al.	
2006/0259982	A1*	11/2006	Upendran	726/27
2006/0267940	A1	11/2006	Groom et al.	
2007/0049335	A1	3/2007	Haitani et al.	
2007/0061487	A1	3/2007	Moore et al.	
2007/0143228	A1	6/2007	Jorden et al.	
2007/0150603	A1	6/2007	Crull et al.	
2007/0173325	A1*	7/2007	Shaw et al.	463/42
2007/0192299	A1	8/2007	Zuckerberg et al.	
2007/0198506	A1	8/2007	Attaran Rezael et al.	
2007/0198648	A1	8/2007	Allen et al.	
2007/0203828	A1	8/2007	Jung et al.	
2007/0233828	A1	10/2007	Gilbert	
2007/0250641	A1	10/2007	Flannery et al.	
2007/0255785	A1	11/2007	Hayashi et al.	
2007/0266097	A1	11/2007	Harik et al.	
2007/0282887	A1	12/2007	Fischer et al.	
2008/0019353	A1	1/2008	Foote	
2008/0046976	A1	2/2008	Zuckerberg	
2008/0065471	A1	3/2008	Reynolds et al.	
2008/0088698	A1	4/2008	Patel et al.	

FOREIGN PATENT DOCUMENTS

EP	1 338 966	A3	8/2005
EP	1675060	A1	10/2005
WO	WO 2005/111760	A1	11/2005
WO	WO2006036165	A2	4/2006
WO	WO2006041425	A2	4/2006
WO	WO2007070676	A2	6/2007

OTHER PUBLICATIONS

No Author, "Dijkstra's algorithm," (website), obtained Apr. 10, 2008, 4 pages, http://en.wikipedia.org/wiki/Dijkstra's_algorithm.

No Author, "Centrality—Wikipedia," (website), 3 pages, obtained Sep. 19, 2007, http://en.wikipedia.org/wiki/Centrality.

No Author, "Centrality—Wikipedia," (website), 3 pages, obtained Sep. 19, 2007, http://en.wikipedia.org/wiki/Eigenvector_Centrality.

No Author, "News—Gaim 1.5.0," (website), obtained Sep. 6, 2007, 3 pages, http://www.gaim.sourceforge.net.

No Author, "Huminity—Social Networking," (website), obtained Feb. 8, 2007, 1 page, http://www.huminity.com/english/software.html.

M.E.J. Newman, "The Mathematics of networks," (chapter), 12 pages, 2008, in The New Palgrave Encyclopedia of Economics, 2nd edition, L. E. Blume and S. N. Durlauf (eds.), Palgrave Macmillan, Basingstoke, http://www-personal.umich.edu/~mejn/papers/palgrave.pdf.

Web page from The Friend of a Friend (FOAF) Project.

http://www.huminity.com/english/software.html (3 pages).

http://gaim.sourceforge.net/ (3 pages).

Architecture of Windows Media Rights Manager, www.microsoft.com/windows/windowsmedia/howto/articles/drmarchitecture.aspx.

FOAF Vocabulary Specification, http://xmlns.com/foaf/0.1/.

Deborah L. McGuinness et al., editors; "OWL Web Ontology Language—Overview", copyright 2004 World Wide Web Consortium (W3C), published Feb. 10, 2004, http://www.w3.org/TR/2004/REC-owl-features-20040210/, 19 pages.

Pretschner, Alexander et al., "Ontology Based Personalized Search," Proceedings of the 11th IEEE International Conference on Tools with Artificial Intelligence, p. 391, Nov. 8-10, 1999.

Warren Sack, "Discourse Diagrams: Interface Design for Very Large-Scale Conversations," System Sciences, Proceedings of the 33rd Annual Hawaii International Conference, 2000.

Marc A. Smith and Andrew T. Fiore, "Visualization Components for Persistent Conversations," Sep. 2000.

Srinivasan, T. et al., "OPSHNN: Ontology Based Personalized Searching Using Hierarchical Neural Networks Evidence Combination," The Sixth IEEE International Conference on Computer and Information Technology 2006, p. 44-44, Sep. 2006.

The Case for a Hybrid P2P Search Infrastructure, http://www.cs.berkeley.edu/~boonloo/research/pier/casehybrid_iptps.ppt.

ICQ, http://www.icq.com/.

Beverly Yang et al., "Designing a Super-Peer Network," 19th International Conference on Data Engineering (ICDE'03), 2003.

Home page for www.myspace.com (accessed Jul. 13, 2007)—1 page.

Home page for www.facebook.com (accessed Jul. 13, 2007)—1 page.

Homepage for www.friendster.com (accessed Jul. 13, 2007)—1 page.

http://pidgin.im/pidgin/home (redirected from http://gaim.sourceforge.net) (accessed Jul. 13, 2007)—1 page.

http://en.wikipedia.org/wiki/Dijkstra%27s_algorithm (accessed Sep. 5, 2007)—3 pages.

Amidon et al., U.S. Appl. No. 11/607,775, filed Dec. 1, 2006, "Systems and Methods for Subdividing and Securing Social Network Circuits".

Amidon et al., U.S. Appl. No. 11/638,027, filed Dec. 13, 2006, "Systems and Methods for Social Network Based Conferencing".

Issa et al., U.S. Appl. No. 11/639,104, filed Dec. 14, 2006, "System and Method of Sharing Content Among Multiple Social Network Nodes Using an Aggregation Node".

* cited by examiner

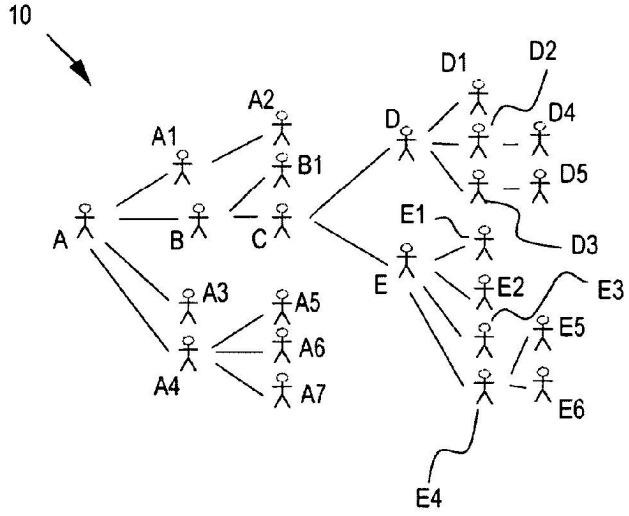

FIGURE 1

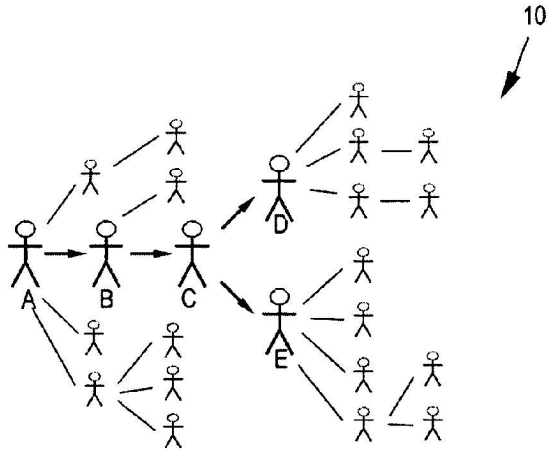

FIGURE 2A

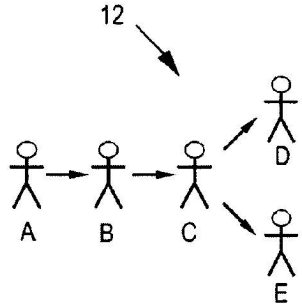

FIGURE 2B

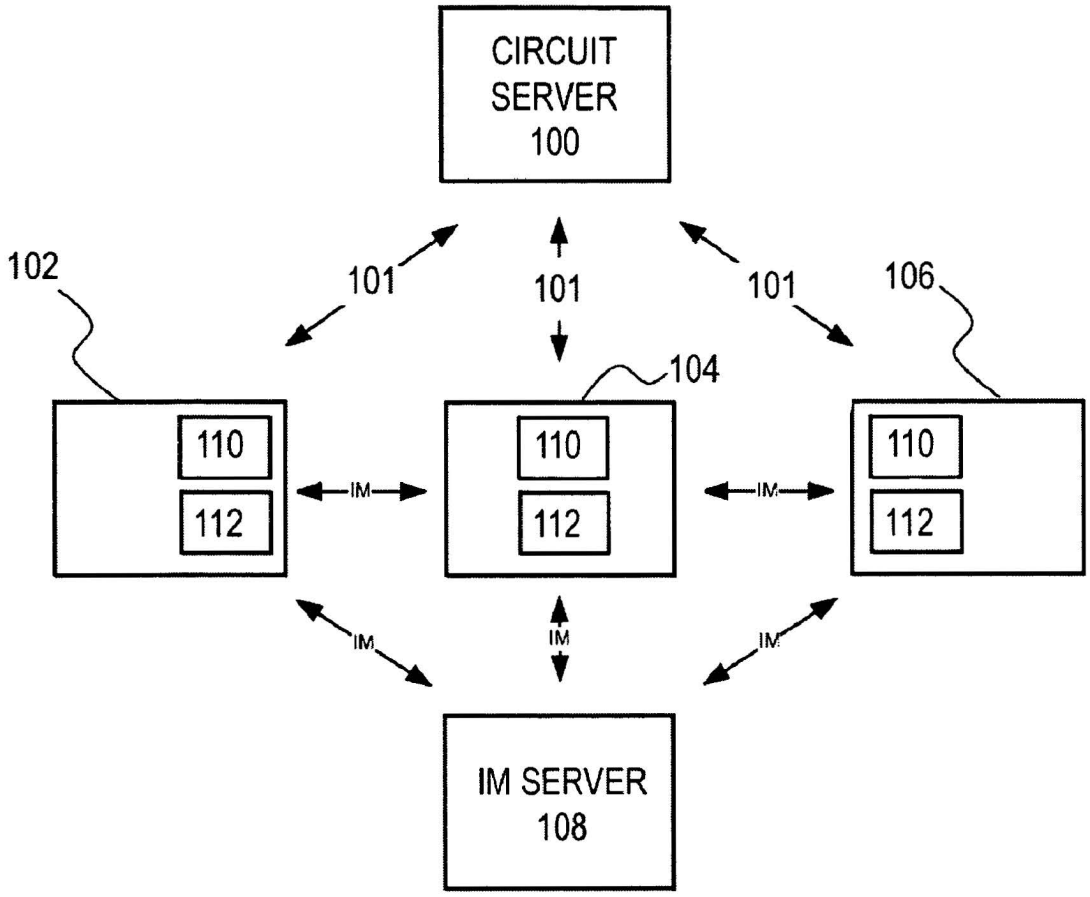
CIRCUIT SERVER 100
101
101
101
102
104
106
110
112
110
112
110
112
IM
IM
IM
IM
IM
IM SERVER 108

Figure 3

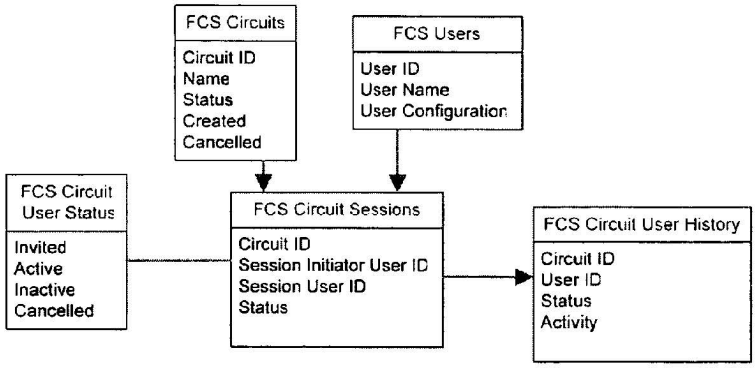

Figure 4

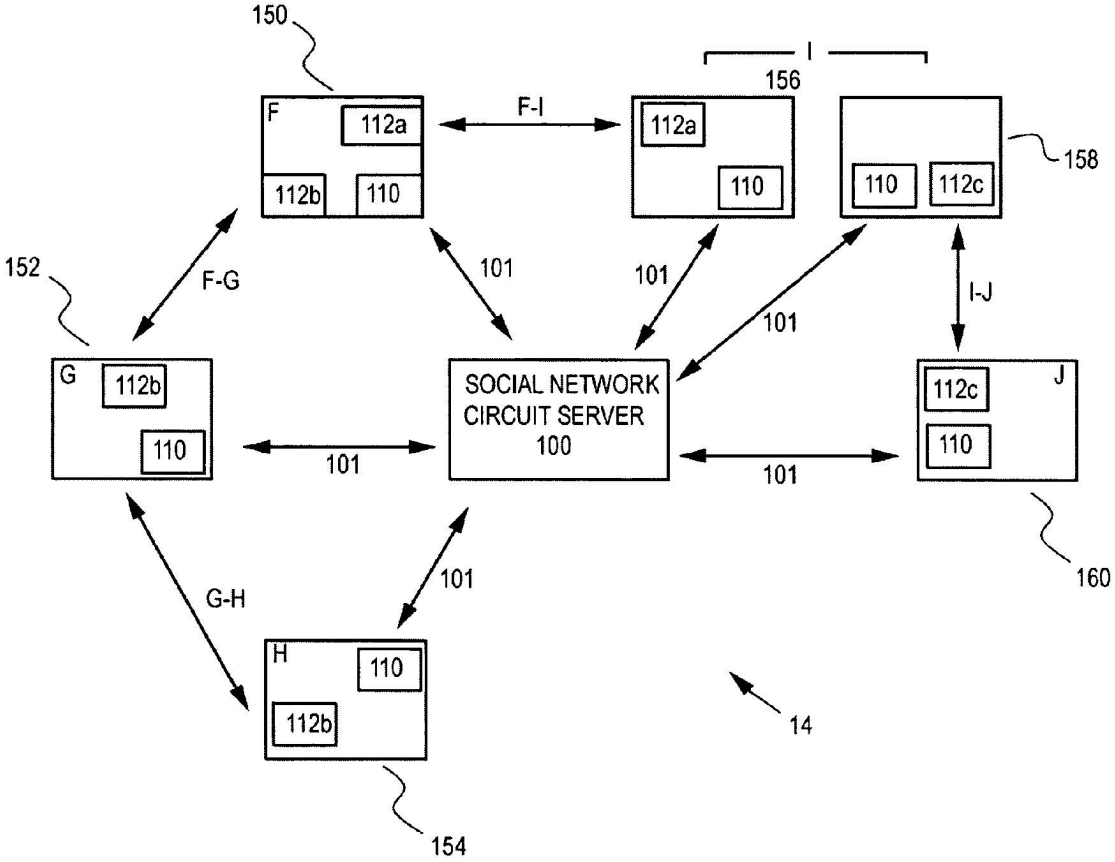

Figure 5

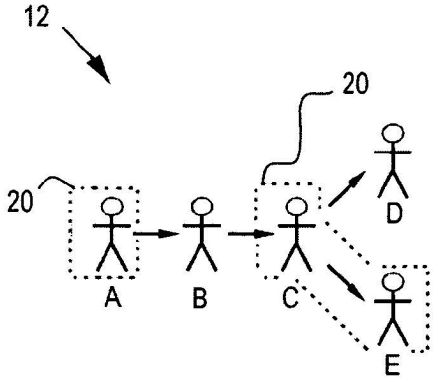

Figure 6A

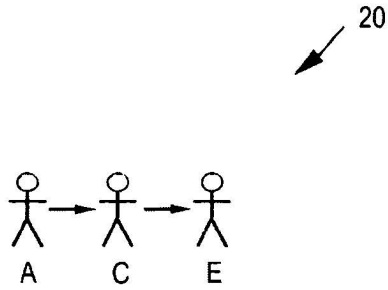

Figure 6B

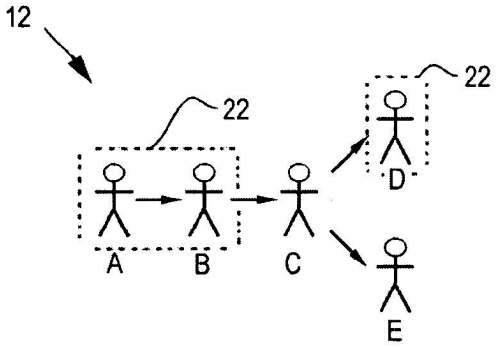

Figure 6C

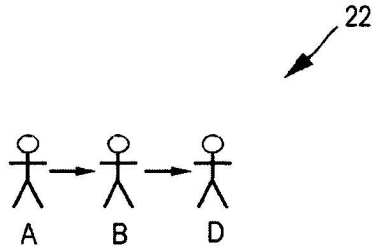

Figure 6D

SYSTEMS AND METHODS FOR DISCOVERING, CREATING, USING, AND MANAGING SOCIAL NETWORK CIRCUITS

BACKGROUND OF THE INVENTION

The increased availability of network-capable computing devices has led to a wide variety of communication options for users. Users can exchange messages and content through various communication systems including e-mail, instant messaging, chat rooms, bulletin and discussion boards, file sharing applications, and blogs and other web sites. For example, instant messaging systems such as Internet Relay Chat (IRC), ICQ, AOL Instant Messenger, Yahoo! Messenger, and Microsoft's MSN Messenger are widely used by many users on the Internet. Similar systems are available for messaging within local networks, as well.

Various arrangements of the previously-listed (and other) communication systems have been proposed for use in so-called "social networking" systems. Generally speaking, a "social network" refers to a group of persons or other entities ("members") linked to one another through one or more types of social connections. Social networks are also commonly referred to as "friend-of-a-friend" networks, although social networks may of course include or consist entirely of entities linked by social connections other than friendship. For example, a social network can include members linked to one another by connections including common friendship, place or field of employment, place of education, place of residence, membership in a club or other group, or common hobbies or topical interests. Many social networking systems attempt to provide computer-based tools for maintaining, enhancing, and creating social networks.

For example, social networking web sites provide users with web space to create a profile and link to various other users designated as "friends." See, for example, http://www.myspace.com and http://www.friendster.com. Users of such sites can post messages and other content to web pages accessible to various parties of their choosing (for example, to "friends only" or to the public at large). Social networking sites may also utilize instant messaging and online chat rooms that allow for near-instantaneous communication between users.

Recent developments in the field of social networking and online communication have been directed towards providing tools for users to create, manage, and explore social networks. For instance, mapping of social networks has been proposed based on correlating contact lists. A user can then explore various social networks of which the user is a part by using the resulting map, diagram, or other representation. For example, a user may use social networking tools to discover that friends of one or more of the user's friends (heretofore unknown to the user) may share common interests. The user may then pursue a closer relationship with the newly found friends-of-a-friend, for example, by discussing topics and sharing content of common interest with both the user's newly-found and original friends. As a further example, tools such as Huminity (http://www.huminity.com) may "traverse" a social network based on buddy or contact lists and provide a representation of the social network.

Social networking sites (and other tools) may provide some indication of changes in social networks over time. For example, as noted above, a social networking site may provide a representation such as a diagram or list of a user's friends, colleagues and other social network members. The social networking site may even update the diagram or list frequently. For instance, the social networking site or system may nearly-instantaneously update the user's social network when the user sends a message to a new friend or contact or when the user deletes a friend or contact.

Many social networking sites and other tools may provide an indicator as to whether a user is online or otherwise available. For example, instant messaging applications frequently provide "buddy lists" that indicate whether a contact is online, online-but-idle, or offline. Some instant messaging applications further indicate when a contact is preparing a message. For example, the open-source messaging application Gaim (http://gaim.sourceforge.net) provides an indicator in a user's instant message window when the other party to the messaging session is typing a message.

Generally speaking, tools that allow users to analyze and explore social networks have been time-limited in that most display static representations of the social network without providing data on the extent to which the social network is "live" or active. Thus, it is difficult for a user to determine whether or how the members of the user's social network are interacting in real time. While various presently-existing systems provide indicators of online status or activity, such systems may not necessarily provide information to the user about the existence and extent of such activity across the social network.

For example, a user may wish to discuss a particular topic with friends or other contacts within his social network. Present systems, such as those including chat rooms for example, allow for collaborative, topic-based discussions. However, to participate in such a discussion, the user needs to seek out a particular chat room and ascertain whether desired contacts are in the chat room. Alternatively, the user may create a chat room regarding the desired topic, but then must locate and invite desired users and screen out undesired users and otherwise assemble the chat room or discussion group.

As a further example, if a user wishes to share content with persons in a social network, the user must first determine if such persons are online and wish to view the content, which takes time and can become burdensome. For example, if a user wants to immediately share a new video, sending an email or other invitation ensures a delayed sharing experience, while initiating multiple instant messaging sessions quickly becomes tedious. Furthermore, depending upon the make up of a particular social network, the user may be unaware of whom to invite. For instance, the user's social network may include close friends and a far-flung network of co-workers. Although the user may be aware of friends that are interested in the new video, the user may not be aware that a co-worker would also enjoy viewing the video unless the user undertakes a certain amount of investigation. Even with presently-existing social networking tools that could reveal the co-worker's preferences, such investigation may entail too large a delay for the user to undertake, thus depriving the user of the fullest social networking online experience.

Therefore, a need exists for a system that allows users to discover, create, and manage active communications within and throughout social networks.

SUMMARY OF THE INVENTION

Objects and advantages of the present invention will be apparent to one of skill in the art upon careful review of the disclosure. Such objects and advantages include providing systems and methods for users to discover, create, explore and manage active communications in one or more social networks.

As used herein, a social network circuit comprises at least some members of a social network. However each member in

a social network circuit is connected to at least one other member in the circuit by way of a live communication link. For example, a live communication link may comprise an ongoing instant messaging conversation between two or more parties. In other embodiments, a live communications link may comprise a file sharing session, an email conversation, blog postings and comments, video and/or audio chat sessions, or other video, textual, and/or audio connections, including telephone connections. Communication links may be achieved in any suitable fashion, including by wired and/or wireless links.

As will be discussed in further detail herein, a communication link can be characterized as "live" when it is in actual use, but also (optionally) for a predetermined time period immediately following use. Furthermore, a communication link may be declared as "live" at one or more predetermined times, either automatically or in response to user scheduling data.

The remainder of this disclosure uses the terms "potential social network circuit" and "active social network circuit." "Potential" circuits comprise any social network circuit that meets the basic criteria of a social network circuit (i.e. each member in the circuit is connected to at least one other member by way of a live communication link). Depending upon various criteria that will be discussed in further detail below, certain members of a "potential" social network circuit may be included in or excluded from certain circuits derived from the potential social network circuit. Therefore, for purposes of clarity, the term "active" social network circuit is used to denote a social network circuit comprising at least some members of a potential social network circuit who meet one or more parameters or criteria.

One of skill in the art will recognize that, while an active social network circuit may comprise a subset of a potential social network circuit, it is entirely feasible for all members of a potential social network circuit to be members of an active social network circuit. Furthermore, it will be apparent that a single potential social network circuit may give rise to a plurality of active social network circuits depending upon what parameters are used.

This disclosure refers generally to "users" participating in and receiving information regarding social network circuits. The term "user" is meant to broadly include not only an individual, but also other entities, such as groups of individuals and organizations when treatable as a single unit.

A method of administrating one or more social network circuits can include receiving session information from at least one client included within a social network. The session information can include data identifying at least one communication link between the client and at least one other client in the social network. The method further includes tracking, based on data including the session information, at least one potential social network circuit comprising a plurality of clients, wherein each client in the potential social network circuit is connected to at least one other client in the circuit by a live communication link. Tracking may include storing, in computer-readable form, data defining the at least one social network circuit.

For example, a social network may include a first, second, third, and fourth client. Session information may be received from the first client, indicating a connection between the first and third clients; from the second client, indicating a communication link between the second and fourth client; and from the third client, indicating a communication link between the second client and the third client. The social network circuit can include all of the first, second, third, and fourth clients.

The method may further include providing information identifying the at least one potential social network circuit to one or more of the clients included in the potential social network circuit. As noted above, a communication link may be identified as live at the time a communication occurs between at least two clients. The link may be additionally identified as live for a predetermined time after a communication occurs between the at least two clients. One or more potential social network circuits may be tracked in real time or substantially in real time (i.e. in real time allowing for network delays).

The method may further include defining one or more active social network circuits based on one or more potential social network circuits. Such circuits may be defined based on at least one parameter defined by at least one client in the potential social network circuit. The clients in the active social network circuit may comprise all of the clients in a potential social network circuit or a subset of clients in a potential social network. The parameter(s) may be provided in a request defined by a requesting client in a potential social network circuit, for instance. Furthermore, the parameter(s) may be defined by one or more clients as preferences regarding desired social network circuit participants or conditions upon the client's participation in an active circuit, for example. Alternatively, an active social network circuit may be formed automatically, for example, by matching parameters of clients in a potential social network circuit.

Suitable parameters can include, but are not limited to one or more of the following, either alone or in combination: particular discussion or content-sharing topics, predetermined time periods of desired participation in active circuits, specified demographics or other user characteristics for circuit participants, specified content type or subject matter for file sharing, identification of particular clients for participation or exclusion, or social network parameters, such as maximum or minimum degrees of separation.

A social network circuit server can comprise one or more computing devices configured to access stored instructions that direct the computing device to perform activities, the activities including receiving session data from at least one social network circuit client application and tracking at least one potential social network circuit based on identifying at least one live communication link connecting a plurality of clients. The server may be further configured to provide identification identifying one or more potential social network circuits to at least one of the clients. The server may be further configured to access configuration parameters defined by at least one client and define a social network circuit based on such parameters.

Client applications may be implemented as computer software products. A computer software product may comprise a computer readable medium embodying executable instructions, the instructions directing a computing device to perform activities including generating session data identifying at least one live communication session between the computing device and at least one other computing device. The instructions may further direct the computing device to interface with a remote sever, provide session data to the remote server, and receive data identifying at least one social network circuit from the server. The instructions may further direct the computing device to display, based on the received data, a visual representation of at least part of at least one social network circuit in a human-readable form. For example, the instructions may direct the computing device to render a diagram of one or more potential and/or active social network circuits meeting certain parameters defined by the user interacting with the client application.

The instructions may direct the computing device to change the graphical representations of social network circuits and members of such circuits in any suitable fashion. For example, the computing device may be configured to graphically differentiate active social network circuit participants, potential social network circuit participants, and social network members from one another.

The software product may be configured as a stand-alone application including communication capabilities such as instant messaging, file sharing, and the like. Alternatively, the software product may be configured as a plug-in module or other element adapted to function with another application, such as an instant messaging client or content-sharing application.

BRIEF DESCRIPTION OF THE SEVERAL VIEWS OF THE DRAWINGS

A full and enabling disclosure including the best mode of practicing the appended claims and directed to one of ordinary skill in the art is set forth more particularly in the remainder of the specification. The specification makes reference to the appended figures, in which:

FIG. **1** is a diagram depicting an exemplary social network;

FIG. **2**A is a diagram depicting an exemplary social network and an exemplary social network circuit, while FIG. **2**B illustrates the exemplary social network circuit alone;

FIG. **3** is a functional block diagram depicting an exemplary arrangement of components in a communication system including social network circuit functionality;

FIG. **4** is an illustration of an exemplary database layout scheme for use in a communication system including social network circuit functionality;

FIG. **5** is a functional block diagram depicting an exemplary arrangement of components in a communication system including social network circuit functionality; and

FIGS. **6**A through **6**D are illustrations of exemplary active social network circuits which may be utilized based on the potential social network circuit shown in FIGS. **2**A and **2**B, with FIG. **6**A showing a first active social network circuit as an overlay on the potential social network circuit, FIG. **6**B depicting the first active social network circuit alone, FIG. **6**C illustrating a second active social network circuit as an overlay on the potential social network circuit, and FIG. **6**D depicting the second active social network circuit alone.

Use of like reference numerals in different features is intended to illustrate like or analogous components.

DETAILED DESCRIPTION OF THE PREFERRED EMBODIMENTS

Reference will now be made in detail to various and alternative exemplary embodiments and to the accompanying drawings, with like numerals representing substantially identical structural elements. Each example is provided by way of explanation, and not as a limitation. In fact, it will be apparent to those skilled in the art that modifications and variations can be made without departing from the scope or spirit of the disclosure and claims. For instance, features illustrated or described as part of one embodiment may be used on another embodiment to yield a still further embodiment. Thus, it is intended that the present disclosure includes modifications and variations as come within the scope of the appended claims and their equivalents.

The technology discussed herein makes reference to servers, databases, software applications, and other computer-based systems, as well as actions taken and information sent to and from such systems. One of ordinary skill in the art will recognize the inherent flexibility of computer-based systems allows for a great variety of possible configurations, combinations, and divisions of tasks and functionality between and among components. For instance, server processes discussed herein may be implemented using a single server or multiple servers working in combination. Databases and applications may be implemented on a single system or distributed across multiple systems. Distributed components may operate sequentially or in parallel. When data is obtained or accessed between a first and second computer system or component thereof, the actual data may travel between the systems directly or indirectly. For example, if a first computer accesses a file or data from a second computer, the access may involve one or more intermediary computers, proxies, and the like. The actual file or data may move between the computers, or one computer may provide a pointer or metafile that the second computer uses to access the actual data from a computer other than the first computer, for instance.

The instant disclosure also makes reference to the relay of communicated data over a network such as the Internet. It should be appreciated that such network communications may also occur over alternative networks such as a dial-in network, a local area network (LAN), wide area network (WAN), public switched telephone network (PSTN), the Internet, intranet or Ethernet type networks and others over any combination of hard-wired or wireless communication links.

The various computer systems discussed herein are not limited to any particular hardware architecture or configuration. Any suitable programming, scripting, or other type of language or combinations of languages may be used to implement the teachings contained herein.

The present disclosure provides several examples of communication systems that include social network circuit functionality. For purposes of example only, the disclosure uses several examples involving an instant messaging (IM) system. However, one of ordinary skill in the art will understand that the principles and teachings contained herein are applicable not only to IM systems, but any other suitable network-based communication technology, including e-mail, web-based communications, file and content sharing, audio communications including cellular and VoIP telephony, and the like.

FIG. **1** illustrates an exemplary static social network **10** as shown from the point of view of user "A." Although the figures provided herein use a diagram form, it will be appreciated that social networks may be illustrated in many different ways. For example, a social network can be visualized as a circle, a tree or graph, a diagram, a node map with expandable/collapsible nodes, a table, etc.

One of skill in the art will note that user A's social network includes a plurality of members separated by varying degrees of separation from A. In this example, user B is separated from user A by a single degree of separation, user C is two degrees of separation from user A, and so on. Users D**4**, D**5**, E**5**, and E**6** are the farthest-separated members of this particular social network, in this case being separated from user A by five degrees of separation.

As is also known to one of skill in the art, a social network such as social network **10** may be generated based on ascertaining a variety of links between the members. For example, social network **10** may be generated through lists of friends or contacts, such as would be provided to a social networking site. Network **10** may represent the end result of correlating e-mail or other contact information, such as a buddy or contact list in an instant messaging application.

For example, users A**1**, B, A**3**, and A**4** may all be linked to user A on the basis of being entries in A's address book. Alternatively, users A**1**, B, A**3**, and A**4** may be on a buddy or contact list in an instant messaging application utilized by A. Continuing with the latter example, users A**5**, A**6**, and A**7** may be on user A**4**'s buddy list, and so forth. One of skill in the art will recognize that the social network **10** may be generated based on a variety of different sources taken alone or in combination; for instance, some of the links between the users depicted in **10** may be based on address book entries, other links based on buddy lists, and still further links based on friend preferences provided by the users. Systems and methods for administering and using social network circuits as described herein may rely on any number and combination of underlying social networks. Data defining the underlying social network(s) may include data obtained from other, pre-existing social network representations. Alternatively or additionally, the underlying social network(s) may be defined from social network representations generated specifically as a basis for social network circuit participation.

As noted previously, however, a map, diagram or other representation of a static social network may be of limited use to user A. For instance, although A may be able to determine whether certain members in one or more social networks are online, A has no easy way of determining who is in actual communication with one another, the extent of such communication, or desired topics of communication.

Embodiments of the presently-disclosed systems and methods may be of value to users such as A. FIG. **2** illustrates social network **10** with an exemplary overlay depicting a social network circuit **12** that may be ascertained though use of the teachings contained herein. Exemplary social network circuit **12** includes users A, B, C, D, and E. As will be discussed herein, social network circuit **12** is tracked using one or more computing devices that receive session information identifying live communication links between the users in the circuit. Social network circuits such as **12** may be presented to one or more users in the circuit to assist the user(s) and enhance the overall online experience and communication capabilities of the user(s).

Social network circuits may be used by members thereof for a variety of different communication purposes, including content distribution, collaboration, gaming, messaging, and topic-based discussions. Social network circuits may be administered and used through use of a plurality of computing devices linked by network connections. As was noted above, any type or combination of types of network connections are suitable.

FIG. **3** depicts a block diagram configuration of an exemplary social network circuit system as implemented alongside an instant messaging (IM) network. In FIG. **3**, a social network circuit server **100** is shown in communication with a plurality of clients **102**, **104**, and **106**. One of skill in the art will appreciate that embodiments of the technology disclosed herein could include more or fewer clients than the three illustrated in this particular example. Each client may comprise, for example, a user computing device such as a personal computer (PC), cellular telephone, or network-capable personal digital assistant (PDA). Each client **102**, **104**, and **106** include processing capability and has access to one or more forms of computer-readable storage. Each client **102**, **104**, and **106** is configured to use such processing capability and memory access to load and execute software including two software applications **110** and **112**.

Software application **110** comprises a social network circuit client application, while software application **112** represents one or more communication applications. In this example, software application **112** is configured to send and receive instant messages between and among the clients, and in this example is further configured to interface with an IM server **108**. For example, application **112** may comprise an IM application such as AOL Instant Messenger or Yahoo! Messenger.

Software application **110** is configured to provide social network circuit functionality to each client by interfacing with one or more social network servers such as social network server **100**. Each instance of application **110** is configured to provide session data to server **100**, the session data including information identifying one or more live communication links between the client and one or more other clients. For example, application **110** may monitor communications activities of one or more communications applications **112** and generate session data therefrom. Additionally or alternatively, application **110** may generate session data by monitoring other activities of the client, for example, by monitoring operating system activities, other applications, or network connections. Application **110** may also be further configured to provide the client with one or more depictions of active and potential social network circuits based on data received from server **100**.

Server **100** is configured to receive session information from the clients **102**, **104**, and **106**. Server **100** may be programmed to continuously track one or more social network circuits by determining which members of a social network are connected by live communication links based on session data received from the client applications **110**. The server may maintain a record of all active, potential, and past social network circuits through use of one or more databases, and may further maintain records of user preferences and other configuration settings.

For example, when one client establishes a communication link to one or more other clients, at least one of the involved clients sends a message to server **100** including session information. For instance, the client application **110** may be configured so that session information is sent to server **100** after the client initiates communication with another client and receives some sort of positive response. The server **100** can store information identifying the session. When queried as to possible circuits involving a client, the server may build an n-level diagram based on live sessions. N may be a limit specified by the querying client. The server may be further configured to observe an upper limit to n based on resource considerations.

Although depicted as a single server in FIG. **3**, the social network circuit server **100** may be implemented as more or fewer physical or logical units. For example, the functionality provided by server **100** may be distributed across a plurality of networked servers or even to supernodes within the social network. Social network server **100** may be implemented as a modular component or process in a larger system, for example, as a component in an instant messaging system or social network site. Application **110** may be configured to contact server **100** on a continuous or intermittent basis and may provide session data including more detail than simply identification of communication links. For example, session data can include updates as to progress and status of previously-identified communication links. Similarly, social network circuit server **100** may be configured to track social network circuits continuously, in real-time or near-real-time, or at regular or irregular intervals. In some embodiments, social network circuit server **100** may be configured to actively query client applications for session and other data.

The system may be configured so that an active social network circuit is not created until one or more users explic-

itly request creation of a circuit. Alternatively, the system may be configured to automatically create active circuits based on one or more parameters.

In the example of FIG. **3**, application **110** comprises a plug-in to the instant messaging application. One of skill in the art will appreciate, however, that application **110** may be implemented as a standalone program with communications capability. In such an example, no separate communication application **112** or related server **108** would be used. Furthermore, depending upon the particular communications context, communication application **112** may connect to more or fewer servers. For example, assuming communication application **112** comprises a peer-to-peer content sharing application, no connection to a central communication server **108** is necessary. However, if one or more central communication servers such as server **108** are utilized by application **112**, such server(s) may be utilized by social network circuit server **100** as a source of session data.

One of skill in the art will appreciate that application **110** need not be limited to tracking communications links between a user via a single application or medium. Instead, the system may be configured to monitor address situations in which a particular social network member may be connected to several members of a social network by disparate means.

For example, a multi-tasking user M may be linked to one member of a social network by an instant messaging connection while engaging in file-sharing with a second member of the social network. Application **110** may be configured to provide session information about both connections to server **100**. Taking the example further, the user may be further connected to a third member of the social network by a VoIP telephone link, with the link also monitored by application **110**.

Multiple instances of application **110** may correspond to the same user. Taking the example of multi-tasking user M, assume that, rather than using a VoIP telephone link, M is in contact with the third member of the social network by a cellular telephone link. In that case, one or more instances of application **110** would provide session data regarding the instant messaging and file-sharing links while a separate instance of application **110** associated with the cellular connection (such as running on the cellular telephone or at the cellular telephone provider) would provide session data regarding the cellular connection.

An example of the operation of a social network circuit administration system will now be discussed in the context of an IM conference amongst members of social network **10** as shown in FIGS. **1**, **2**A, and **2**B using a system such as is illustrated in FIG. **3**. For purposes of this example, it is assumed that each user is operating a computing device such as **102**, **104**, or **106** executing an instant messaging application **112** interoperating with a social network circuit client application **110**.

Assume user A goes online to talk to one or more contacts, and begins by messaging user B. Client application **110** sends session information to server **100** indicating that A and B are communicating using IM. Server **100** generates a record indicating that one potential circuit (A→B) exists. Some time later, while B and A are still in contact, user C messages with user D. Client application **110** running on user C's machine sends session information to server **100**, which generates another record, with server **100** indicating existence of two potential circuits (A→B) and (C→D).

Assume further that, while the above messaging is occurring, user C also messages with user E. C's machine sends session information to server **100**, which then modifies its records to show two potential circuits (A→B) and (C→(D and E)). Depending upon the particular programming of server **100**, the circuits may be rendered as (A→B), (C→D), and (C→E). Of course, one of ordinary skill in the art will appreciate that the particular data and logical format used by server **100** to track circuits is unimportant so long as server **100** is appropriately configured to accurately ascertain the nature and extent of the circuits.

Finally, while the above messaging is still occurring, user B sends a message to user C. User B's machine notifies server **100**, which makes a note of the newest live session. Server **100** is further configured to recognize that, among the four sessions, one potential social network circuit (depicted at **12** in FIG. **2**) including users A through E now exists (A→B→C→(D and E)). Therefore, server **100** updates its records to reflect the single potential social network circuit.

During the various messaging sessions, server **100** may also provide information regarding the potential social network circuits to the various participating clients. For example, server **100** may be configured to provide structured information in a format such as an XML file to each client indicating social network circuits which the client may participate in. For instance, the structured information may be provided to each client after session data about the client has been received. Alternatively, server **100** may provide the structured information to each client at regular or irregular intervals or in real time.

Data indicating potential social network circuits may be provided to users in any suitable fashion based on data received from server **100**. For example, client application **110** may be configured to render a diagram depicting one or more social network circuits as an overlay on a social network, such as is depicted in FIG. **2**. FIG. **2** illustrates a potential social network circuit **12** corresponding to the above-discussed (A→B→C→(D and E)) circuit as an overlay on social network **10**. Users may thereby visually determine which members of a social network are in active communication. In this example, icons representing users in the potential social network circuit are rendered larger than non-members, and members are linked by arrows rather than dashed lines. Although unidirectional arrows are shown, one of skill in the art will appreciate that the links are actually bidirectional.

As one of skill in the art will appreciate, server **100** may comprise any suitable computing device or devices appropriately configured to obtain session data and track social network circuits. For example, a social network circuit system may track social network circuits using one or more database structures as shown in FIG. **4**. For instance, a record may be maintained for each social network circuit based on a unique identifier, the record further including a name for the circuit, status, a set of users, status for those users, and an audit trail of activity on the circuit.

The exemplary database structures shown in FIG. **4** may be used to track and maintain records of potential and active social network circuits. For example, a record may be maintained for all users that includes a user ID, user name, and configuration parameters. The database may maintain a record for each circuit, the record including a circuit ID, name, status, date of creation, and date of cancellation. Each session of a circuit may also be tracked in a record, the record including circuit ID, session initiator user ID, user IDs for the session, and the status of the session. A record for the status of each circuit user may be maintained, noting, for example, whether the user is invited, active, inactive, or cancelled. The database may further include history records tracking individual users, circuits, status, and history. For example, the history may include times of activity and inactivity, content or other information about the substance of activity, and the like.

For example, if users A, B, C, D, and E had previously participated in a social network circuit, the server **100** may annotate a record corresponding to the previous record rather than declare the existence of a new circuit. Data included in the audit trail may be used to provide additional features and options to the members of the circuit or enhance the efficiency and functionality of the system

The system may manage the status of a particular circuit or sub-circuit in a number of ways. For example, as noted above, "potential" social network circuits may include any members linked to the circuit by at least one live communications link. "Active" circuits may be designated based on matching members to one or more parameters that may be member-defined or system-defined (or both). When an active circuit is first created, all members may be added to the circuit with a status as "invited." Each user may then choose to participate in the circuit by accepting or declining the invitation. Users not participating in an active circuit may still receive indicators showing the existence of the circuit, and may optionally later enter a pre-existing circuit by making a request using client application **110**.

The request may be directed to server **100** and/or to the other client applications **110** depending upon the setup of the system and/or the particular circuit. For example, the system may be configured so that server **100** adds a new member to a circuit only upon confirmation by one or more members of the circuit. The request may be directed to a designated moderator, for example, or may be forwarded from the requesting member to the moderator by way of server **100**. In other embodiments, addition to a circuit may first require confirmation by all currently-listed members of said circuit. In such a case, application **110** may be configured to obtain permissions form the other client applications **110** and provide such permissions to server **100**. Alternatively, of course, server **100** may query each client application **110** corresponding to the currently-listed members.

Server **100** may indicate a circuit as "active" until the initiator of the circuit terminates the circuit (or other users terminate the circuit, provided such users have permission to do so). Server **100** may be configured to terminate a circuit after the number of participants falls below a predetermined level. For example, a circuit may persist until one of the last two participating members exits. Of course, one of skill in the art will recognize that "terminating" a circuit refers to terminating an active social network circuit. Server **100** will continue to track one or more potential social network circuits so long as there remain social network members connected by one or more live communication links.

As was noted above, social network circuits are defined on the basis of live communication links between users. However, in some embodiments, it may be advantageous to utilize a delay option. When a delay option is used, "live" communication links are deemed to include both links over which communication is actually occurring and links over which communication has occurred within a predetermined time window.

Using the example above, assume that users C and D ended their IM session just prior to B and C initiating theirs. If a delay option was not used, user D would not be included in the social network circuit even if user D were still online and willing to participate in further discussions, for example, with user A. This would be because, in this example, without the active (C→D) link, there is no other path between users A and D.

However, if the definition of the circuit includes a delay option, the outcome would differ. For example, including a delay option allowing for a link to be active up to 60 seconds after the last communication could allow user D to remain in the potential circuit (C→(D and E)) long enough to observe the inclusion of A and B into the circuit via B's message to C.

The delay functionality may be implemented using any suitable technique. For instance, server **100** may be configured to identify a session as "active" for a default time period after receipt of session information from a client. In alternative embodiments, the session information sent to server **100** may include a time-out value different from the default value and set by the user by way of the client application. For example, client application **110** may include a configuration preference allowing users such as D to specify a length of time over which their status as "active" would persist for social network circuit formation. The preference could be tailored for specific users, times, circuits, and other degrees of granularity. Delay periods may be varied based on other parameters. For example, the delay period may be a function of the session type, the underlying network connection, the extent or volume of communication sent during the session, or other parameters. Certain of the parameters could be set at the server level, while others could be set at the client level.

In alternative embodiments, in addition to or instead of a delay option, it may be advantageous to utilize an advance option. When an advance option is used, "live" communication links are deemed to include certain links over which communication has not yet occurred. Users can provide a parameter to client application **110** indicating one or more time periods during which they wish one or more communication links to be "live." For example, if the users of social network circuit **12** wish to communicate every weekday at 2 PM, they can specify such a preference to client applications **110**. Client application **110** may implement the advance option alone or in combination with server **100**, such as by relaying the preference to server **100**.

In any event, server **100** treats the respective links in the circuit as "live" at the designated time (i.e. 2 PM). Alternatively, server **100** may be configured to utilize audit trail and historical data to automatically schedule recurring social network circuits based on past times of interaction. The advance option could be combined with the delay option so that pre-scheduled links comprising a social network circuit become "live" at one or more predetermined times, but only remain "live" for a set time interval if further communications do not actually occur (i.e. users that decline to actively participate are ultimately dropped).

FIG. **5** depicts a block diagram of computing devices and software components used to form another exemplary social network circuit. FIG. **5** depicts five users (F, G, H, I, and J) using various computing devices linked to one another and to a social network server **100**. For ease of reference, in this example, users F through J will be referred to as members of social network circuit **14**. For example, users F through J could be linked to the same social network server **100** as discussed above in conjunction with users A-E, but would not be included in social network circuit **12** since there is no live communication link between any of the members of social network circuit **12** and any of users F through J. If, for example, one or more live communication links were initiated between one or more members of circuits **12** and **14**, the circuits could be merged into a single social network circuit. One of skill in the art will appreciate, however, that for various reasons, social network circuit **14** could alternatively operate based on a separate social network server.

In this example, F is using computing device **150**, G is using computing device **152**, and H is using computing device **154** which may all comprise, for instance, laptop computers. User I is using two different devices **156** and **158**. Device **156**

may comprise a PDA, while device **158** comprises, for instance, a voice over internet protocol (VoIP) telephone set, for example. Finally, in this example, user J is using a desktop computer **160**.

As shown in FIG. **5**, the several devices are also running various distinct communications programs. In this case, devices **150** and **156** are running a file-sharing application **112***a*; devices **152** and **154** are running instant messaging program **112***b*; while devices **158** and **160** are running application **112***c* providing VoIP functionality. It will be apparent to one of ordinary skill in the art that this particular social network circuit is heterogeneous—that is, its members are linked by several types of communication links, rather than the IM-only example discussed above regarding users A through E. Of course, there could be further variance in the type and nature of the communications applications, such as different version/revisions, different operating systems, etc.

Each of the several devices is also running an instance of social network circuits client application **110**. Each instance monitors communication links between each user and provides session data over connection **101** to social network circuit server **100**. For example, the instance of application **110** running on machine **150** monitors both the P2P (or other) file sharing communication link F-I and IM communication link F-G, while the other instances of **110** each monitor a single connection in this example. Session data regarding user I may be reported by two instances of application **110**, with one instance providing session data regarding P2P connection F-I via device **156** and another instance of application **110** providing session data regarding VoIP connection I-J via machine **158**. Each instance of application **110** may be configured to interface with the various communications applications **112** in any suitable manner in order to generate session data regarding the communication links. Furthermore, as noted above, application **110** may generate some or all session data by accessing other resources and processes running on each computing device, for example, information available from the device's operating system and network connection status indicators.

For ease of reference, connections between the various communications applications **112** and any communication-application specific servers (if any) are not shown in FIG. **5**. For example, instant messaging application **112***b* may utilize a central server such as IM server **108** in the example discussed above in conjunction with FIG. **3**. Applications **112***a* and **112***c* may utilize one or more servers, as well. In any event, however, any use of centralized (or other) servers by the communication applications **112** is not essential to the present subject matter. However, for those communication applications **112** which do connect to a centralized or other server, the client-server connection(s) may be used by application **110** in generating session data.

Connections **101** may further be used by each client application **110** to receive social network circuit data for applications **110** to utilize in rendering social network circuit diagrams and other representations to users F through J. For example, although all users are not linked via the same type of connections, application **110** nonetheless will indicate to each that potential social network circuit **14** including users F through J is available. Thereafter, an interested user or users could then request the creation of one or more active social network circuits based on potential social network circuit **14**.

For example, a user may request that an active circuit be created based on a communication type preference parameter, such as an active circuit using IM communications. Initially, the active IM circuit would include users F, G, and H. However users I and J could be given notification through application **110** that the IM circuit is available and could activate corresponding versions of IM application **112***b*. Alternatively, the active social network circuit could be created based on any number of other parameters discussed herein.

As was noted above, a particular group of social network members may give rise to any number and combination of social network circuits. Various "active" social network circuits may be defined based on matching configuration and preference settings provided by users to create user-tailored circuits. For example, client application **110** may provide for configuration and preference settings for users to define the extent and nature of their participation in social network circuits. Such preferences may be stored locally and accessed by client application **110** in providing functionality at the client machine. As an example, each user may specify that client application **110** is only to display social network circuits with users matching certain parameters. Preferences may alternatively or additionally be relayed to the social network circuit server **100** for circuit definition, tracking, and other purposes.

Such parameters may include, but are not limited to, one or more of the following, either alone or in combination: particular discussion or content-sharing topics, predetermined time periods or times of day of desired participation in active circuits, specified demographics or other user characteristics for circuit participants, specified content type or subject matter for file sharing, identification of particular clients for participation or exclusion, or social network parameters including maximum or minimum degrees of separation or user trust levels. The parameters may include simple on/off functionality for circuit participation as well.

Returning to the example using FIGS. **1-3**, assume that application **110** and server **100** are configured to allow users of the system to designate preferred types of circuits in which they prefer to participate. For this example, further assume that the members A, C, and E all indicate that they wish to participate in circuits devoted to discussion and sharing of certain types of content such as "comedy video." The users proceed as set forth in the previous example to contact one another and social network circuit **12** is tracked by server **100**.

Based on the preference information provided by members A, C, and E, server **100** may recognize that all three of said users wish to participate in a circuit devoted to "comedy video." Server **100** may automatically designate an active social network circuit including users A, C, and E. The circuit may provisionally designate A, C, and E as users pending confirmation of participation (e.g., by accepting an invitation generated by server **100**).

Alternatively, server **100** may be queried by one or more client applications executed by A, C, and E for information about users for a "comedy video" circuit. The query may be the result of a request generated by users A, C, or E and sent using client application **110**. As an alternative, the request may be automatically generated by the client application **110** based on configuration settings. For instance, user A may be interested in comedy videos and discussions of political humor. A's instance of application **110** may query server **100** for potential circuits including users matching the "comedy video" parameter or the "political humor" parameter. In the case of "comedy video," server **100** would return data indicating that users C and E are members of a potential social network circuit including A who are interested in "comedy video."

Based on the returned data, any or all of users A, C, and E could request creation of an active social network circuit devoted to "comedy video." Server **100** could be configured

to verify that such a circuit does not already exist and, if so, provide the requesting user(s) with the option of joining the pre-existing circuit. If a "comedy video" circuit previously existed but was terminated (i.e. a prior session ended), the requesting user(s) could be provided the option of reviving the previous circuit.

As noted above, client application **110** may be configured to provide user A with a diagram of one or more social networks with one or more potential social network circuits overlaid thereon. Furthermore, sub-circuits and/or active circuits can be depicted as further overlays or alterations to the diagram. Additionally, application **110** may include support for display preferences in order to generate views of social network circuits and/or members therein based on matching certain parameters. For instance, users may filter views of potential and/or active social network circuits and sub-circuits based on configuration parameters and the display preferences.

Using the example from above, user A may configure application **110** to display existing social network circuits related to "comedy video." Users A, C, and E may be highlighted in active social network circuit **20** as is depicted in FIG. **6**A, with user B (uninterested in comedy video) grayed out. Alternatively, as illustrated in FIG. **6**B, the display may show only members in the active social network circuit **20** who meet the criteria. Furthermore, the display may be configured to have highlighted users A, C, and E as interested in "comedy video" prior to the creation of active social network circuit **20**.

As was noted above, a particular user may participate in any number of potential and/or active social network circuits. FIGS. **6**C and **6**D illustrate another social network circuit **22** in which user A may participate. For example, assuming that users B and D (but not C and E) were interested in joining a social network circuit related to "political humor," server **100** could create (or such users could request creation of) active social network circuit **22**. FIG. **6**C shows circuit **22** overlain on potential social network circuit **12**, while FIG. **6**D illustrates a simplified view of circuit **22** alone.

Client application **110** could be configured for a variety of possible display options for various active and potential social network circuits, such as providing the overlays and simplifications of social network diagrams such as those shown in FIGS. **2**A-**2**B and FIGS. **6**A-**6**D to differentiate active social network participants, potential social network circuit participants, and other members of a social network from one another.

Various combinations and alternatives for displaying potential social network circuits, active social network circuits, and sub-circuits will be apparent to one of ordinary skill in the art. For example, members of a particular social network circuit or sub-circuit may be differentiated based on highlighting, changes in icon shape, size, form, or color, changes in the link or links illustrated between the members, animation, textual or visual annotations or animations, and the like.

For example, client application **110** may render, for members of potential social network circuit **12**, a diagram of social network **10** in which members of the potential social network circuit are connected by glowing arrows. Users interested in a particular topic may be denoted by an icon and/or text. For instance, users interested in "comedy video" (i.e. A, C, and E) may be annotated by a comedic icon. Alternatively, selection of a particular parameter may gray out or erase non-matching users from the display.

As was noted above, the social network circuit server **100** may include an audit trail tracking participation in social network circuits. Data pertaining to social network circuit use may be provided to client application **110** and rendered for display to users. For instance, a user may track the user's history of participation in particular social network circuits and/or the history of his friends or other social network members. User demographic and circuit use data may also be of interest to outside parties, such as social network providers, content providers, and marketers, and so may be packaged and provided to such outside parties.

It is appreciated by persons skilled in the art that what has been particularly shown and described above is not meant to be limiting, but instead serves to show and teach various exemplary implementations of the present subject matter. As set forth in the attached claims, the scope of the present invention includes both combinations and sub-combinations of various features discussed herein, along with such variations and modifications as would occur to a person of skill in the art.

What is claimed:

1. A method for forming a social network circuit comprising:

receiving, by a first server, first session data identifying a first active communication session between a first device and a second device, wherein the first active communication session has a first finite duration and enables real-time communications between a first user of the first device and a second user of the second device during the first finite duration;

receiving, by the first server, second session data identifying a second active communication session between the second device and a third device, wherein the second active communication session has a second finite duration and enables real-time communications between the second user and a third user of the third device during the second finite duration;

receiving, from the first device, a request to identify any potential social network circuits in which the first device may participate;

in response to the request, providing, by the first server, a message to the first device identifying the second active communication session;

receiving, by the first server, a request from the first device to form a first social network circuit comprising the first active communication session and the second active communication session;

providing to the second device and the third device a message requesting permission to form the first social network circuit;

receiving approval to form the first social network circuit from the second device and the third device; and

forming, by the first server, the first social network circuit wherein a communication by any of the first device, the second device, and the third device are provided real-time to each of the others of the first device, the second device and the third device.

2. The method of claim **1** further comprising receiving a message from the first device and providing the message to the second device and the third device.

3. The method of claim **1** wherein the first active communication session and the second active communication session each comprise an instant messaging (IM) communication session.

4. The method of claim **1** further comprising receiving a file from the first device, and transmitting the file to the second device and the third device via the first social network circuit.

5. A computer server comprising:

a network interface adapted to communicate with a network;

a processor coupled to the network interface and adapted to:

receive first session data identifying a first active communication session between a first device and a second device, wherein the first active communication session has a first finite duration and enables real-time communications between a first user of the first device and a second user of the second device during the first finite duration;

receive second session data identifying a second active communication session between the second device and a third device, wherein the second active communication session has a second finite duration and enables real-time communications between the second user and a third user of the third device during the second finite duration;

receive, from the first device, a request to identify any potential social network circuits in which the first device may participate;

in response to the request, provide a message to the first device identifying the second active communication session;

receive a request from the first device to form a first social network circuit comprising the first active communication session and the second active communication session;

provide to the second device and the third device a message requesting permission to form the first social network circuit;

receive approval to form the first social network circuit from the second device and the third device; and

form the first social network circuit wherein a communication by any of the first device, the second device, and the third device are provided real-time to each of the others of the first device, the second device and the third device.

6. The computer server of claim 5 wherein the processor is further adapted to receive a message from the first device and provide the message to the second device and the third device.

7. The computer server of claim 5 wherein the first active communication session and the second active communication session each comprise an instant messaging (IM) communication session.

8. The computer server of claim 5 wherein the processor is further adapted to receive a file from the first device, and transmit the file to the second device and the third device via the first social network circuit.

9. A computer program product, comprising a non-transitory computer usable storage medium having a computer readable program code embodied therein, the computer readable program code adapted to be executed on a processor to implement a method comprising:

receiving first session data identifying a first active communication session between a first device and a second device, wherein the first active communication session has a first finite duration and enables real-time communications between a first user of the first device and a second user of the second device during the first finite duration;

receiving second session data identifying a second active communication session between the second device and a third device, wherein the second active communication session has a second finite duration and enables real-time communications between the second user and a third user of the third device during the second finite duration;

receiving, from the first device, a request to identify any potential social network circuits in which the first device may participate;

in response to the request, providing a message to the first device identifying the second active communication session;

receiving a request from the first device to form a first social network circuit comprising the first active communication session and the second active communication session;

providing to the second device and the third device a message requesting permission to form the first social network circuit;

receiving approval to form the first social network circuit from the second device and the third device; and

forming the first social network circuit wherein a communication by any of the first device, the second device, and the third device are provided real-time to each of the others of the first device, the second device and the third device.

10. The computer program product of claim 9 wherein the method further comprises receiving a message from the first device and providing the message to the second device and the third device.

11. The computer program product of claim 9 wherein the first active communication session and the second active communication session each comprise an instant messaging (IM) communication session.

12. The computer program product of claim 9 wherein the method further comprises receiving a file from the first device, and transmitting the file to the second device and the third device via the first social network circuit.

* * * * *