IN THE UNITED STATES PATENT AND TRADEMARK OFFICE

BEFORE THE PATENT TRIAL AND APPEAL BOARD

META PLATFORMS, INC.,
Petitioner

v.

SITNET, LLC,
Patent Owner

Case IPR2024-00529
U.S. Patent No. 8,332,454

DECLARATION OF DR. JEREMY COOPERSTOCK IN SUPPORT OF PETITION FOR *INTER PARTES* REVIEW OF U.S. PATENT NO. 8,332,454

Mail Stop "PATENT BOARD"
Patent Trial and Appeal Board
U.S. Patent and Trademark Office
P.O. Box 1450
Alexandria, VA 22313-1450

TABLE OF CONTENTS

I. INTRODUCTION 1
II. MY BACKGROUND AND QUALIFICATIONS 2
III. SUMMARY OF OPINIONS 5
IV. LIST OF DOCUMENTS CONSIDERED 6
V. LEGAL UNDERSTANDING 7
A. My Understanding of Claim Construction 7
B. My Understanding of Obviousness 8
C. A Person of Ordinary Skill in the Art 10
VI. OVERVIEW OF THE '454 PATENT 11
VII. OVERVIEW OF THE TECHNOLOGY 15
A. Social Networks 16
B. Sharing Information Related to Situations or Events 17
VIII. PROSECUTION HISTORY 19
IX. PERSON OF ORDINARY SKILL IN THE ART 19
X. CLAIM CONSTRUCTION 20
XI. OVERVIEW OF THE PRIOR ART 20
A. Amidon 20
B. Wong 24
C. Gogic 26
XII. GROUND 1: AMIDON RENDERS OBVIOUS CLAIMS 1-7, 10-17, 19, AND 20 27
A. Independent Claim 1 27
1. [1.P]: A method of creating a projection of a situational network, the method comprising 27
2. [1.1]: (a) creating, by an event node server, an event node in a multi-dimensional personal information network, the event node corresponding to a situation 29
3. [1.2]: (b) forming a projection of nodes of the situational network using geographic locations of a plurality of devices

corresponding to nodes in the multi-dimensional personal information network 38

4. [1.3]: (c) transmitting an invitation to establish a link with the event node server to the devices corresponding to each node in the projection formed in step (b) 40

5. [1.4]: (d) receiving a response from at least one of the devices from step (c) accepting the invitation to establish a link with the event node server 41

6. [1.5]: (e) establishing a link with each device accepting the invitation 42

B. Claim 2 45

C. Claim 3 46

D. Claim 4 47

E. Claim 5 49

F. Claim 6 50

G. Claim 7 51

H. Independent Claim 10 52

1. [10.P] A method of creating a projection of a situational network, the method comprising 52

2. [10.1] (a) receiving, by a first device corresponding to a node in a multi-dimensional personal information network, an invitation to establish a link with an event node server in response to the first device being included in a projection of nodes of the multi-dimensional personal information network 53

3. [10.2] (b) transmitting a response accepting the invitation to establish a link with the event node server; 53

4. [10.3] (c) establishing a link with the event node server; and 53

5. [10.4] (d) receiving information about the situation from the event node server. 54

I. Claim 11 54

J. Claim 12 55

K. Claim 13 55

L. Claim 14 56

M. Claim 15 57

N. Claim 16 58

O. Claim 17 59

P. Claim 19 59

Q. Independent Claim 20 60

XIII. GROUND 2: THE COMBINATION OF WONG AND GOGIC RENDERS OBVIOUS CLAIMS 1-4, 6, 8-18, AND 20. 61

A. A POSA would have found it obvious to combine Wong and Gogic. 62

B. Independent Claim 1 65

1. [1.P]: A method of creating a projection of a situational network, the method comprising 65

2. [1.1]: (a) creating, by an event node server, an event node in a multi-dimensional personal information network, the event node corresponding to a situation 67

3. [1.2]: (b) forming a projection of nodes of the situational network using geographic locations of a plurality of devices corresponding to nodes in the multi-dimensional personal information network 70

4. [1.3]: (c) transmitting an invitation to establish a link with the event node server to the devices corresponding to each node in the projection formed in step (b) 72

5. [1.4]: (d) receiving a response from at least one of the devices from step (c) accepting the invitation to establish a link with the event node server 74

6. [1.5]: (e) establishing a link with each device accepting the invitation 74

C. Claim 2 75

D. Claim 3 76

E. Claim 4 78

F. Claim 6 78

G. Claim 8 80

H. Claim 9 81

I. Independent Claim 10 81

1. [10.P] A method of creating a projection of a situational network, the method comprising 81

2. [10.1] (a) receiving, by a first device corresponding to a node in a multi-dimensional personal information network, an invitation to establish a link with an event node server in response to the first device being included in a projection of nodes of the multi-dimensional personal information network 81

3. [10.2] (b) transmitting a response accepting the invitation to establish a link with the event node server; 82

4. [10.3] (c) establishing a link with the event node server; and 82

5. [10.4] (d) receiving information about the situation from the event node server 82

J. Claim 11 82

K. Claim 12 83

L. Claim 13 83

M. Claim 14 84

N. Claim 15 85

O. Claim 16 86

P. Claim 17 86

Q. Claim 18 87

R. Independent Claim 20 88

XIV. CONCLUSION 89

I, Jeremy Cooperstock, hereby declare as follows.

I. INTRODUCTION

1. I have been retained as an expert witness on behalf of Petitioner Meta Platforms, Inc. ("Petitioner") for the above-captioned *inter partes* review (IPR). I am being compensated for my time in connection with this IPR at my standard consulting rate.

2. I understand that this declaration accompanies a petition for IPR involving U.S. Patent No. 8,332,454 ("the '454 patent") (EX1001), which resulted from U.S. Patent Application No. 13/274,712 ("the '712 application"), filed on October 17, 2011. I understand that the '454 patent alleges a priority date of February 2, 2007. I refer to this date throughout this declaration.

3. In preparing this declaration, I have reviewed the '454 patent and each of the documents cited herein, in light of general knowledge in the art before February 2, 2007. In formulating my opinions, I have relied upon my experience, education, and knowledge in the relevant art. In formulating my opinions, I have also considered the viewpoint of a person of ordinary skill in the art ("POSA") (i.e., a person of ordinary skill in the field of telecommunications and computer networking) prior to February 2, 2007.

II. MY BACKGROUND AND QUALIFICATIONS

4. I am a professor in the Department of Electrical and Computer Engineering at McGill University. My *Curriculum Vitae* is attached as Exhibit 1004.

5. I received my B.Sc. in Electrical Engineering (with Honors) from the University of British Columbia in 1990, my M.Sc. in Computer Science from the University of Toronto in 1992, and my Ph.D. in Electrical and Computer Engineering from the University of Toronto in 1996.

6. I have been employed at McGill University since November 2017, where I am currently a Full Professor in the Department of Electrical and Computer Engineering. In this capacity, I conduct and supervise research activities, and teach courses at the upper undergraduate and graduate level on human-computer interaction, artificial intelligence, embedded systems, and haptic interaction design.

7. I am a member of the Centre for Intelligent Machines, a founding member of the Centre for Interdisciplinary Research in Music Media and Technology, a member of the International Laboratory on Learning System, a member of the McGill Institute for Aerospace Engineering, and an associate member of Biomedical Engineering at McGill University. I presently direct a group of approximately 50 researchers at the Shared Reality Lab at McGill, which

focuses on computer mediation to facilitate high-fidelity human communication and the synthesis of perceptually engaging, multimodal, immersive environments. Among other projects, I led the development of the Intelligent Classroom, a high-fidelity orchestra rehearsal simulator, a simulation environment that renders graphic, audio, and vibrotactile effects in response to footsteps, and a mobile game treatment for amblyopia.

8. I have been developing and working with network media distribution technologies since 1990, and I led the world's first demonstrations of high-fidelity multichannel audio streaming over the Internet in 1999 and 2000, followed by multiple simultaneous streams of uncompressed high-definition video in 2005. My work on the Ultra-Videoconferencing system was recognized by an award for Most Innovative Use of New Technology from ACM/IEEE Supercomputing and a Distinction Award from the Audio Engineering Society. The research I supervised on the Autour project earned the Hochhausen Research Award from the Canadian National Institute for the Blind and an Impact Award from the Canadian Internet Registry Association, and my Real-Time Emergency Response project won the Gold Prize (brainstorm round) of the Mozilla Ignite Challenge. I am also a recipient of several "best paper" awards from scholarly societies for my research.

9. I have carried out significant research involving network communication protocols, including wireless communication employing IEEE

802.11 (WiFi) and IEEE 802.15 (Bluetooth). My experience in these areas includes development of the Adaptive File Distribution Protocol (AFDP, 1995), analysis of the tradeoffs between bandwidth, power demands, and latency for audio streaming over WiFi, Bluetooth, and ultra-wideband protocols (2007), and assessment of the performance and scalability of wireless audio streaming for applications requiring latency-optimized multimedia streaming (2008).

10. I have led all aspects of development and experimentation in the Autour project (2009-2016), which employs a combination of wireless communication protocols, and manages authentication for communication between clients and server, in addition to third-party information services. I have supervised a variety of projects that require sharing of WiFi network access credentials across multiple devices. I led a research project (MIMIC), which communicates sensor data between two coupled smartwatches using Bluetooth for local communication between the smartwatches and their peered smartphones, and the public Internet between the smartphones. I also led a project that uses both Bluetooth and WiFi communication between smartphones, a GPU-based physics engine, and a microelectronics architecture that renders vibrotactile effects on mobile footwear.

11. I have worked with IBM at the Haifa Research Center, Israel, and the Watson Research Center in Yorktown Heights, New York, the Sony Computer Science Laboratory in Tokyo, Japan, and was a visiting professor at Bang &

Olufsen, Denmark, where I conducted research on telepresence technologies as part of the World Opera Project. I led the theme of Enabling Technologies for a Networks of Centres of Excellence on Graphics, Animation, and New Media (GRAND) and I am an associate editor of the Frontiers Journal in Virtual Reality, and the Institute of Electrical and Electronics Engineers (IEEE) Transactions on Haptics, and previously, the Journal of the AES.

III. SUMMARY OF OPINIONS

12. In forming my opinions about the ’454 patent, I have considered the following grounds of unpatentability. Based on my review of the prior art references that form the basis of these grounds, it is my opinion that claims 1-20 of the ’454 patent would have been obvious to a POSA prior to February 2, 2007.

Ground	Basis	Claims	References
1	§103	1-7, 10-17, 19, and 20	Amidon
2	§103	1-4, 6, 8-18, and 20	Wong and Gogic

13. I have been asked to consider how a POSA would have understood the challenged claims in light of the disclosures of the ’454 patent. I have also been asked to consider how a POSA would have understood the prior art references Amidon, Wong, and Gogic.

14. Further, I have been asked to consider and provide my technical review, analysis, insights, and opinions regarding whether a POSA would have

understood that the combinations of the prior art references listed in the table above render obvious claims 1-20 of the ’454 patent.

IV. LIST OF DOCUMENTS CONSIDERED

15. In formulating my opinions, I have relied upon my training, knowledge, and experience that are relevant to the ’454 patent. I have also reviewed and am familiar with the following documents and materials in addition to any other documents cited in this declaration:

Exhibit No.	Description
1001	U.S. Patent No. 8,332,454 to Cona *et al.* (“’454 patent”).
1002	Prosecution History of U.S. Patent No. 8,332,454 (“Prosecution History”).
1004	*Curriculum Vitae* of Dr. Jeremy Cooperstock
1005	U.S. Patent No. 8,346,864 B1 to Amidon *et al*. (“Amidon”)
1006	U.S. Patent Application Publication No. 2008/0103784 A1 to Wong *et al*. (“Wong”)
1007	U.S. Patent No. 8,103,300 B2 to Gogic (“Gogic”)
1008	U.S. Patent No. 7,801,971 B1 to Amidon *et al*. (“Amidon-971”)
1009	Palen *et al*., *Online Forums Supporting Grassroots Participation in Emergency Preparedness and Response*, Communications of the ACM, Vol. 50, No. 3 (March 2007)
1010	U.S. Patent No. 7,016,307 B2 to Vasudev *et al*. (“Vasudev”)
1011	U.S. Patent Application Publication No. 2006/0230053 A1 to Eldering (“Eldering”)

Exhibit No.	Description
1012	Harghirian *et al.*, *Increasing Advertising Value of Mobile Marketing – An Empirical Study of Antecedents*, Proceedings of the 48th Hawaii Int'l Conf. on System Sciences, IEEE (2005).
1013	Boyd & Ellison, *Social Network Sites: Definition, History, and Scholarship*, Journal of Computer-Mediated Communication, 13 (2008) pp. 210-230.
1014	U.S. Patent No. 8,024,330 to Franco *et al*. ("Franco")
1015	November 26, 2006 Wikipedia page "Social network" (from web.archive.org) (accessed January 24, 2024)
1016	Barry Wellman, *Network Analysis: Some Basic Principles*, Sociological Theory, Vol. 1 (1983) pp. 155-200 ("Wellman")

16. To the best of my knowledge, the above-mentioned documents and materials are true and accurate copies of what they purport to be. An expert in the field would reasonably rely on them to formulate opinions such as those set forth in this declaration.

V. LEGAL UNDERSTANDING

17. I have also relied upon various legal principles (as explained to me by Meta's counsel) in formulating my opinions. My understanding of these principles is summarized below.

A. My Understanding of Claim Construction

18. I understand that during an *inter partes* review proceeding, claims are to be construed in light of the specification as would be read by a person of ordinary skill in the relevant art at the time the application was filed. I understand

that claim terms are given their ordinary and customary meaning as would be understood by a person of ordinary skill in the relevant art in the context of the entire disclosure. A claim term, however, will not receive its ordinary meaning if the patentee acted as his own lexicographer and clearly set forth a definition of the claim term in the specification. In this case, the claim term will receive the definition set forth in the patent.

B. My Understanding of Obviousness

19. I understand that a patent claim is invalid if the claimed invention would have been obvious to a POSA at the time the application was filed. This means that even if all of the requirements of the claim cannot be found in a single prior art reference that would anticipate the claim, the claim can still be invalid.

20. To obtain a patent, a claimed invention must have, as of the priority date, been nonobvious in view of the prior art in the field. I understand that an invention is obvious when the differences between the subject matter sought to be patented and the prior art are such that the subject matter as a whole would have been obvious to a POSA at the time the invention was made.

21. I understand that to prove that prior art or a combination of prior art renders a patent obvious, it is necessary to:

(1) identify the particular references that, singly or in combination, render the patent obvious;

(2) specifically identify which elements of the patent claim appear in each of the asserted references; and

(3) explain how the prior art references could have been combined in order to create the inventions claimed in the asserted claim.

22. I also understand that prior art references can be combined under several different circumstances. For example, it is my understanding that one such circumstance is when a proposed combination of prior art references results in a system that represents a predictable variation, which is achieved using prior art elements according to their established functions.

23. I also understand that when considering the obviousness of a patent claim, one should consider whether a teaching, suggestion, or motivation to combine the references exists so as to avoid impermissibly applying hindsight when considering the prior art. I understand this test should not be rigidly applied, but that the test can be important to avoid such hindsight.

24. I understand that certain objective indicia can be important evidence as to whether a patent is obvious or nonobvious. Such indicia include:
(1) commercial success of products covered by the patent claims; (2) a long-felt need for the invention; (3) failed attempts by others to make the invention;
(4) copying of the invention by others in the field; (5) unexpected results achieved by the invention as compared to the closest prior art; (6) praise of the invention by

the infringer or others in the field; (7) the taking of licenses under the patent by others; (8) expressions of surprise by experts and those skilled in the art at the making of the invention; and (9) the patentee proceeded contrary to the accepted wisdom of the prior art.

25. At this point, I am not aware of any secondary indicia of non-obviousness. But, I reserve the right to review and opine on any evidence of objective indicia of nonobvious that may be presented during this proceeding.

26. I also understand that "obviousness" is a legal conclusion based on the underlying factual issues of the scope and content of the prior art, the differences between the claimed invention and the prior art, the level of ordinary skill in the prior art, and any objective indicia of non-obviousness.

27. For that reason, I am not rendering a legal opinion on the ultimate legal question of obviousness. Rather, my testimony addresses the underlying facts and factual analysis that would support a legal conclusion of obviousness or non-obviousness, and when I use the term obvious, I am referring to the perspective of one of ordinary skill at the time of invention.

C. A Person of Ordinary Skill in the Art

28. I understand that a person of ordinary skill in the relevant art ("POSA") is presumed to be aware of all pertinent art, thinks along conventional wisdom in the art, and is a person of ordinary creativity—not an automaton.

29. I have been asked to consider the level of ordinary skill in the field that someone would have had at the time the claimed invention was made. In deciding the level of ordinary skill, I considered the following:

- the levels of education and experience of persons working in the field;
- the types of problems encountered in the field; and
- the sophistication of the technology.

30. My opinion below explains how a POSA would have understood the technology described in the references I have identified herein around the February 2, 2007 timeframe, which I have been advised is the earliest possible effective filing date for the ’454 patent. However, my opinions herein would not be affected if the ’454 patent is found to only be entitled to a later effective filing date.

31. Regardless of whether I use “I” or a “POSA” during my technical analysis below, all of my statements and opinions are always to be understood to be based on how a POSA would have understood or read a document at the time of the alleged invention.

VI. OVERVIEW OF THE ’454 PATENT

32. The ’454 patent is directed to a “method of creating a projection of a situational network.” EX1001, Abstract. A “situational network allows the participants … to interact and exchange information over connections to or through

a computer network … regarding the event or situation." EX1001, 3:64-67. The '454 patent describes a "situation" as broadly including social events, emergency events, weather phenomena, natural disasters, etc. *E.g.*, EX1001, 4:48-57, 30:62-63. A "situation" also includes "weather related activities, such as skiing or surfing." EX1001, 4:48-57. A "projection," also referred to as "a 'projected' view," is described as "a subset of the nodes" of a social network, and can be determined based on a wide variety of criteria, including the geographic location of the user device as recited in the '454 patent claims. EX1001, 16:26-27, 21:65-22:50. In short, the '454 patent relates simply to methods and systems that allow a set of participants in a social network to exchange information about an event or situation.

33. Figure 30, reproduced below, shows an example of a geographic projection 3050 of nodes of a situational network 3000. EX1001, 22:21-22.

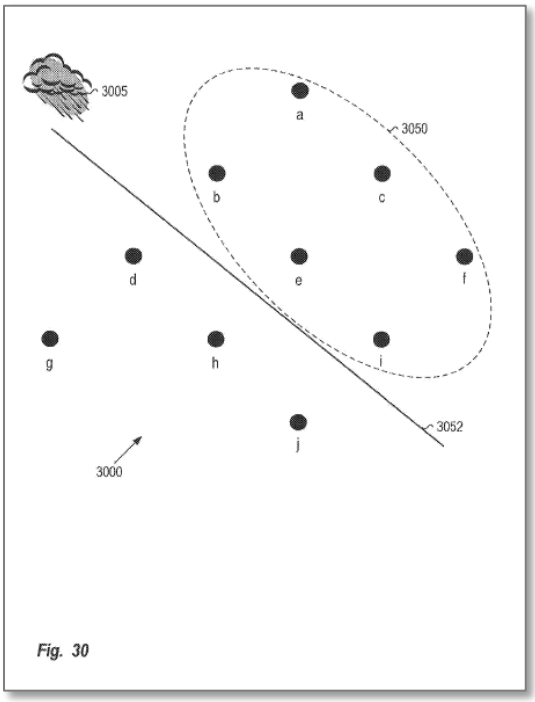

EX1001, FIG. 30.

34. Network 3000 includes the ten nodes labeled (a) through (j). EX1001, 22:22-23. In this example, the situation 3005 is a severe rain storm posing a flood threat to persons located on one side of a river (boundary 3052). EX1001, 22:25-28. Geographic projection 3050 includes a subset of the nodes, i.e., nodes (a), (b), (c), (e), (f), and (i), which are included based on their location with respect to boundary 3052, i.e., those users threated by flood waters. EX1001, 22:22-30.

35. The ’454 patent makes clear that the implementation of its methods is architecture agnostic. *See* EX1001, 6:28-29 (“A variety of different architectures may be used to connect the devices of participants in the situational network.”).

Regardless of the architecture used, the same generic process is used to form the situational network. EX1001, 7:15-20. This process is shown in Figure 41, reproduced below.

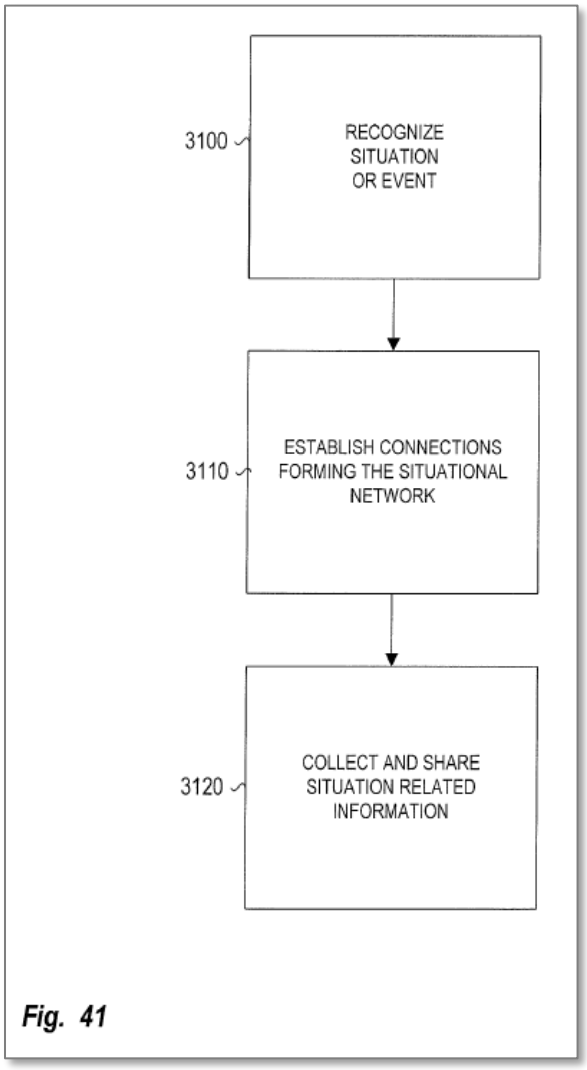

EX1001, FIG. 41.

36. The ’454 patent also says that the situational network is implemented using known and conventional technologies. For example, users are connected via the situational network using known devices, such as cell phones, PDAs, personal

computers, network servers, or "other devices generally known to those skilled in the art that enable connection to, from and through the computer network." EX1001, 4:25-30. Further, participants in the situational network are associated with "nodes," which are simply the users' point of connection to the network, and which "may be implemented using a wide variety of available hardware and technologies generally known in the art, such as software on a personal computer or a handheld PDA." EX1001, 14:59-15:9, 15:17-21. As the '454 patent also explains, a POSA would have understood that the nodes of the network "may be interconnected and may communicate with each other using a wide variety of available hardware and technologies generally known in the art, such as TCP/IP over an Ethernet or a wireless network." EX1001, 15:21-25.

VII. OVERVIEW OF THE TECHNOLOGY

37. As I explained above, the '454 patent describes forming a "situational network" as a subset of a social network, otherwise referred to in the '454 patent claims as a "multi-dimensional personal information network." EX1001, Abstract. The claims of the '454 patent broadly recite general concepts, such as "creating … an event node in a multi-dimensional personal information network," "forming a projection of nodes of the situational network using geographic locations of a plurality of devices corresponding to nodes in the multi-dimensional personal information network," and then inviting the devices corresponding to each node in

the projection to link to the event node and linking to devices that accept the invitation. *See, e.g.*, EX1001, claim 1. Dependent claims are directed to communicating and receiving information about the situation to and from the linked devices. These concepts were well known before the ’454 patent’s earliest possible priority date. For instance, social networks were well known at the time, as were systems for sharing information related to situations or events.

A. Social Networks

38. The earliest social network sites were launched in the late 1990s, with such sites growing in popularity through the 2007 priority date of the ’454 patent. EX1013, 212. In November 2006, the Wikipedia page for “Social network” described a “social network” as a “social structure made of nodes which are generally individuals or organizations.” EX1015, 1. The Wikipedia page confirms the popularity of Internet based social networks in this time frame. EX1015, 3-4.

39. Further, as described in the Background section of Amidon, “a ‘social network’ refers to a group of persons or other entities … linked to one another through one or more types of social connections.” EX1005, 1:27-30. Amidon continues, describing that “[m]any social networking systems attempt to provide computer-based tools for maintaining, enhancing, and creating social networks.” EX1005, 1:38-40. Amidon also describes that communication among users of social networking web sites was known. *See, e.g.*, EX1005, 1:41-49.

40. The Background section of Wong also confirms that online social networking systems were known, and were "popular" for connecting with and sharing information with other users via the Internet. EX1006, ¶3.

41. Indeed, this confirms my opinion that the concept of communication via online social networks was well known and would have been readily appreciable by a POSA in the relevant time frame.

B. Sharing Information Related to Situations or Events

42. The broad concept of sharing information related to situations or events was also known prior to the '454 patent. For instance, it was known for emergency warning systems to receive information describing emergency events from users near the events, and to use that information to warn other nearby users of the event. For instance, Franco discloses an "incident alert system" in which "[a] user uses a networked mobile phone with geo-positioning capability to communicate with a server to report incidents… based on the user's current geographic position." EX1014, Abstract. "Reports of incidents are transmitted to the server accompanied by the current position of the user/mobile phone." EX1014, Abstract. The server then reports the information related to the incident to certain users within a "zone of interest" near the incident. EX1014, 2:17-25, 3:7-28. Franco's Figure 1, below, illustrates "an alert system 102 includes a server 104

that receives reports 114 from and responds to inquiries 115 from a plurality of users' networked mobile phones 110." EX1014, 4:7-9.

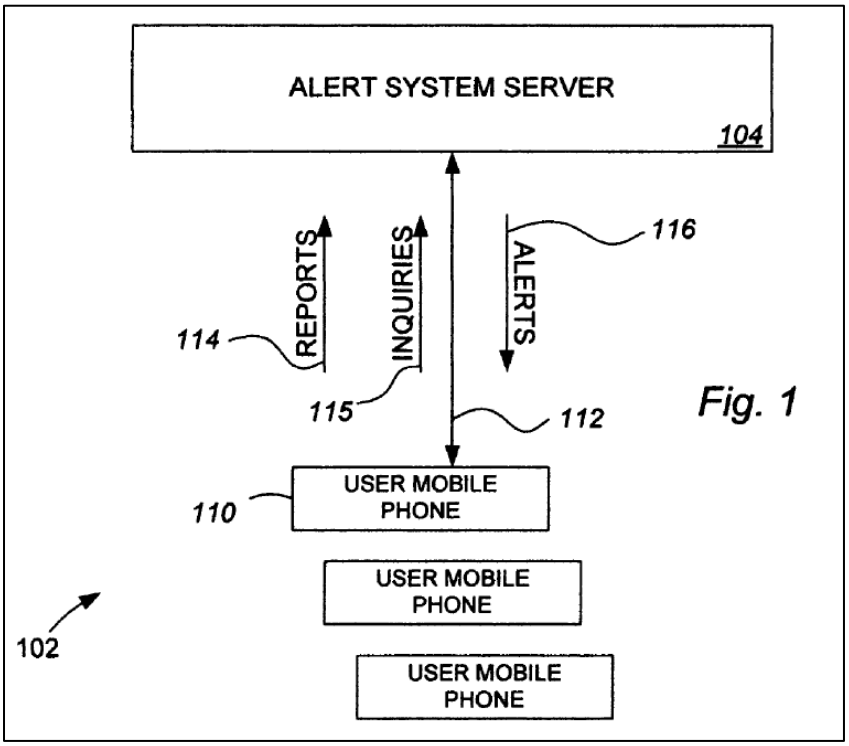

EX1014, FIG. 1.

43. Franco thus capitalized on the intuitive idea that "facilitating information sharing based on users' geographic locations… significantly opens the opportunities for individuals to be Good Samaritans by informing others of hazards or by responding to urgent requests for assistance by others in need." EX1014, 1:53-58. Indeed, this confirms my opinion that the concept of sharing information related to situations was well known and would have been readily appreciable by a POSA in the relevant time frame.

VIII. PROSECUTION HISTORY

44. The ’454 patent issued on December 11, 2012 from U.S. Patent Application No. 13/274,712 (“’712 application”), and claims a priority date of February 2, 2007. The ’454 patent issued after a single office action in which the Examiner rejected all claims only under the judicially created doctrine of obviousness-type double patenting over the claims of other SitNet issued patents. EX1002, 141-142. Applicant filed Terminal Disclaimers. EX1002, 159-163. In response, the Examiner issued a Notice of Allowance, but did not provide any comments on reasons for allowance. EX1002, 176-180. The prosecution history includes no substantive discussion of the claims in view of prior art.

IX. PERSON OF ORDINARY SKILL IN THE ART

45. A person of ordinary skill in the art (POSA) would have had a bachelor’s degree in Computer or Electrical Engineering or equivalent discipline, and approximately two years’ experience in telecommunications or computer networking. Additional education could substitute for professional experience, and significant work experience could substitute for formal education.

46. I am well qualified to determine the level of ordinary skill in the art. I am very familiar with the technology of the ’454 patent during the February 2007 timeframe. As mentioned above, by 2007, I had obtained both a Masters (in Computer Science) and a Ph.D. (in Electrical and Computer Engineering) from the

University of Toronto and had acquired extensive experience relating to computer networking and telecommunications.

X. CLAIM CONSTRUCTION

47. I have been informed that the challenged claims of the ’454 patent are to be given their ordinary and customary meaning as understood by one of ordinary skill in the art at the time of the invention in light of the specification and the prosecution history pertaining to the patent. Based on my review of the challenged claims, it is my opinion that none of the claim terms require explicit constructions. Accordingly, all claim terms should receive their plain and ordinary meaning, in the context of the ’454 patent specification.

XI. OVERVIEW OF THE PRIOR ART

A. Amidon

48. Amidon is directed to “providing systems and methods for users to conduct online conferences based on underlying social network structures.” EX1005, 2:54-56. In other words, Amidon allows users of a social network to communicate and exchange information in a so-called “conference.” The list of participants in a social network conference may be specified based on various “parameters,” examples of which include degree of separation from a first user, geographic considerations, user parameters (e.g., identity, interests, demographic characteristics), or classification of user relationship. *See* EX1005, 2:57-60, 3:22-47, 4:5-9, 12:37-65. A user may initiate this discussion within the social network,

and specify the parameters defining the list of participants in the conference. EX1005, 10:11-24. Once a conference has been initiated, users participating in the conference can direct messages to particular users within the conference, selected based on the same and/or other parameters as those used to set up the conference. EX1005, 2:60-63.

49. Figure 4 of Amidon "illustrates an exemplary user interface which may be used by one or more users participating in social network conferences." EX1005, 16:65-67. A social network conference can be accessed, for example, in window 200 of a user interface such as that shown in Figure 4.

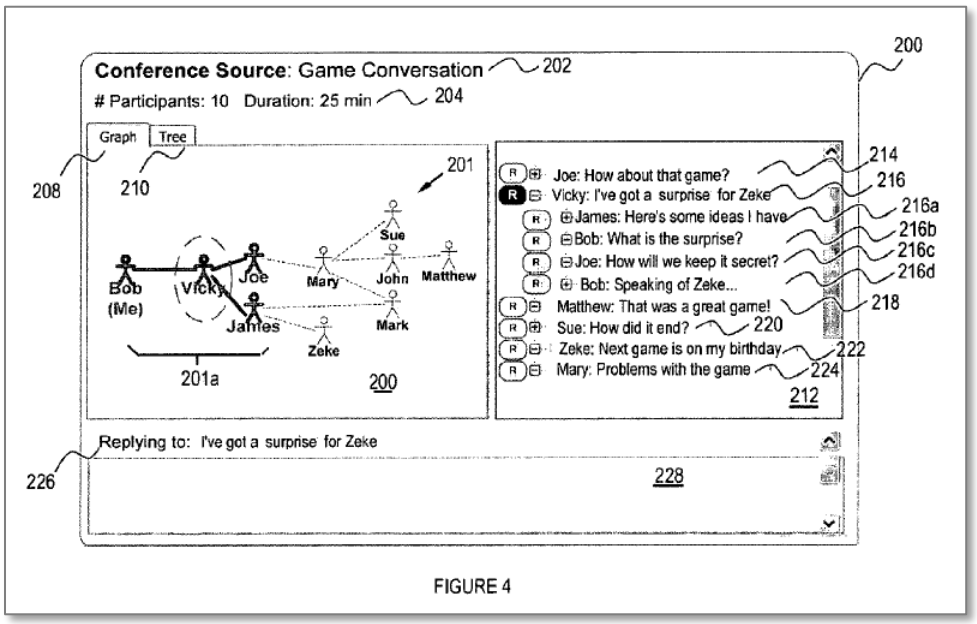

FIGURE 4

EX1005, FIG. 4.

50. The conference window 200 includes title bar 202, which provides a description of the conference (i.e., "Game Conversation"). EX1005, 17:2-7. Thread

display area 212 includes "data (messages, content, etc.) exchanged amongst the members of conference 201." EX1005, 17:21-55; *see also* EX1005, 16:65-18:50 (describing the features of window 200).

51. Figure 2 illustrates an example of system 12 that supports social network based conferencing. EX1005, 8:1-3.

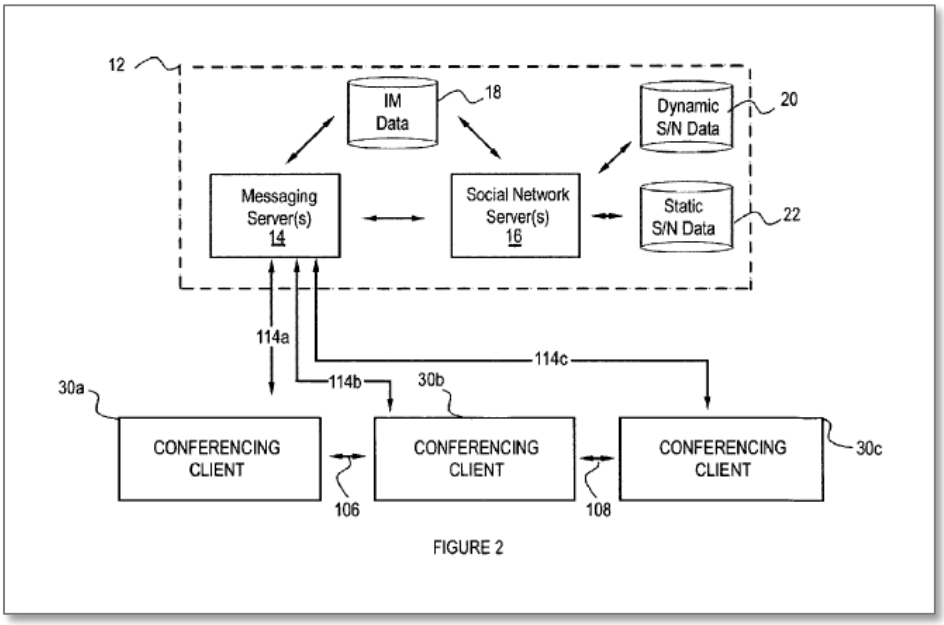

EX1005, FIG. 2.

52. System 12 includes messaging server 14 and social network server 16. EX1005, 8:3-5. Messaging server 14 facilitates sending messages between users. EX1005, 8:44-9:8. Social network server 16 defines social network relationships and preferences, and stores data defining social networks, member data (e.g., profile information), relationships, etc. EX1005, 9:9-38.

53. "Users may participate in social network conferences by way of any suitable communication technique(s)," including, for example, textual messages (such as instant message (IM)), audio messages (such as voice chat or telephone communication), video messages, or combinations thereof. EX1005, 3:4-15. Each of conferencing clients 30a, 30b, 30c comprises one or more computing devices that interface with the messaging server 14 of system 12. EX1005, 8:12-35, FIG. 2.

54. Figure 6B illustrates an embodiment of a social network based conferencing system 312.

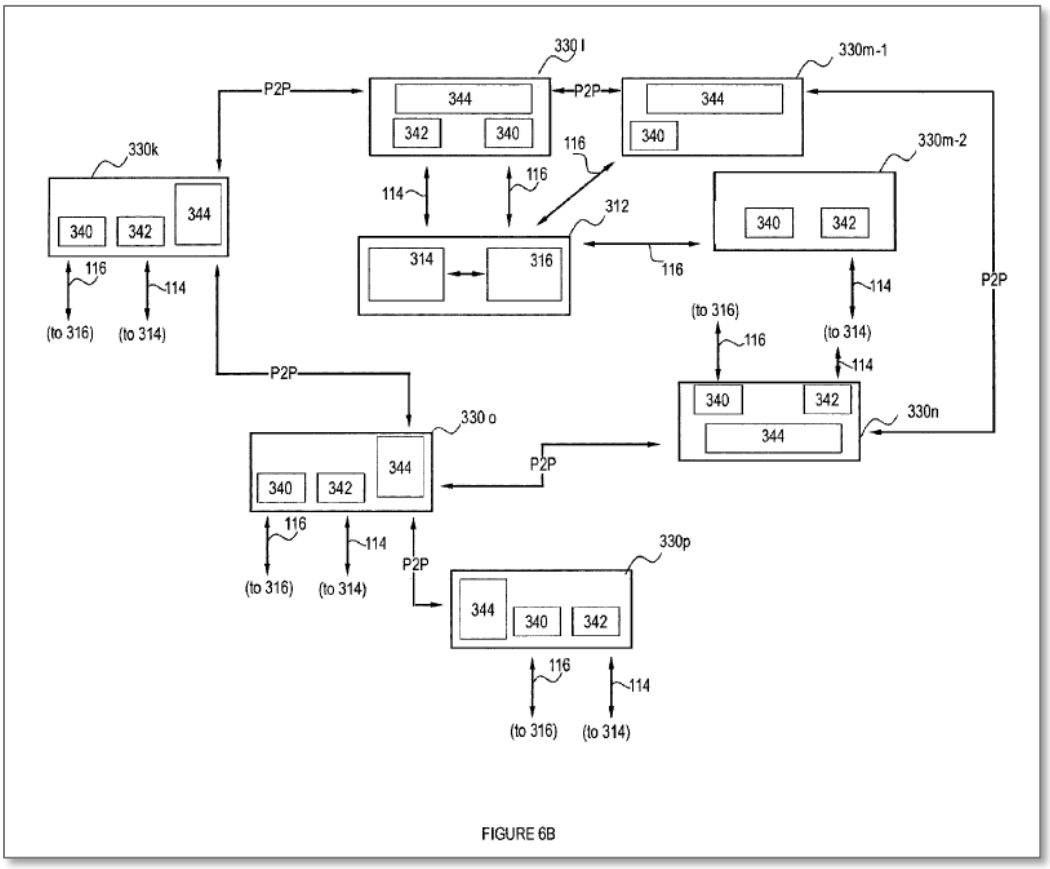

FIGURE 6B

EX1005, FIG. 6B.

55. Computing devices 330 are respectively associated with each user in the social network 300. EX1005, 19:42-67. As in the system 12 of Figure 2, system 312 includes "one or more social network servers 316 and one or more messaging servers 314" and "various data stores" (not shown). EX1005, 20:1-7.

56. Additionally, a POSA would have understood that the embodiments of Figures 2 and 6B of Amidon disclose similar features, and the teachings of one could be applied to the other with a reasonable expectation of success. Amidon explicitly describes in discussing the embodiment of Figure 6B that "[*a*]*s was noted previously*, the social network server(s) and messaging server(s) have access to various data stores including data defining social networks, user preferences, messaging status, and the like, but such stores are not illustrated in this example for purposes of clarity." EX1005, 20:1-7 (emphasis added). The earlier discussion of "data stores" in Amidon was in relation to the embodiment of Figure 2, e.g., data stores 18, 22. *See* EX1005, 8:1-11, 8:55-59, 9:23-38, 10:3-6.

B. Wong

57. Wong relates to a "method and system for generating an interactive computerized biological network consisting of living and non-living entities based upon the multiple relationship types which can exist between entities." EX1006, Abstract. Wong teaches creating a social network. *See, e.g.*, EX1006, ¶¶2, 3, 17-19. Figure 2 of Wong is reproduced below.

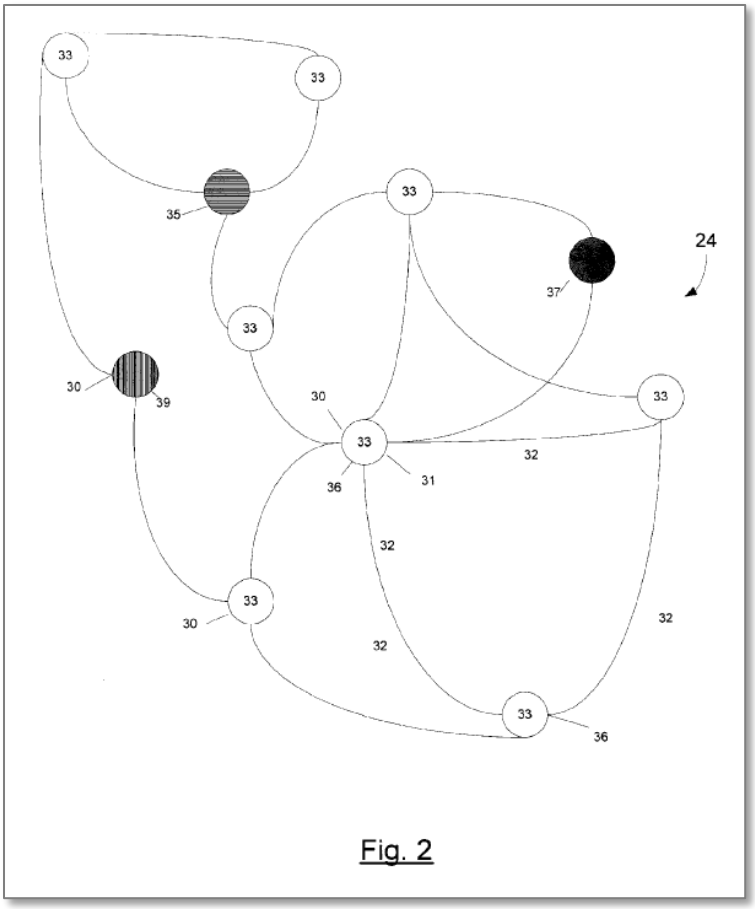

EX1006, FIG. 2.

58. In Wong, the "network of living and non-living entities is represented by a number of elements, each representing a living or non-living entity, which are referred to as 'nodes' 30, joined by connections 32, referred to as 'linkages', to other nodes 30." EX1006, ¶21.

59. Wong also teaches communication between nodes in a social network. "The social networking features … facilitate many forms of communication, such as notification of updates, alerts, sharing of files and photos, blogs, instant messaging and comments." EX1006, ¶44. As described in Wong, each node of the

network represents a living or non-living entity, such as people, places, objects, or animals. EX1006, ¶21. In Wong, people or organizations "can represent themselves to other persons or organizations of persons through their active nodes and interact electronically with other persons or organizations of persons represented by an active node." EX1006, ¶30. The sender of communications can select which nodes in the network can receive a particular communication. EX1006, ¶44.

C. Gogic

60. Gogic relates to "a system and method for providing group communication services to an ad-hoc group formed according to vicinity with other users of communication device(s) (CD), or according to proximity of a given locality, in an existing communication system." EX1007, 4:16-20; *see also* Abstract.

61. "In group communication system 200, a group of communication device users, individually known as group or net members, communicate with one another using a wireless communication device (CD) assigned to each group or net member." EX1007, 5:65-6:2.

62. In Gogic, an ad-hoc communication group may be formed, for example, in response to an emergency notification and based on the geographic proximity of users to a designated location. EX1007, 10:16-11:13, FIG. 4. Users

are invited to join the communication group, and if they meet the designated criteria, may accept the invitation. EX1007, 10:45-11:9.

XII. GROUND 1: AMIDON RENDERS OBVIOUS CLAIMS 1-7, 10-17, 19, AND 20

63. In my opinion, Amidon renders obvious claims 1-7, 10-17, 19, and 20.

A. Independent Claim 1

1. [1.P]: A method of creating a projection of a situational network, the method comprising

64. I understand that in certain circumstances the preamble of a claim may be limiting. To the extent the preamble is determined to be limiting, it is my opinion that Amidon teaches the preamble.

65. As described in the ’454 patent, a “situational network 3000 is created when an occurrence or expected occurrence of an event or situation 3005 causes connection, also referred to as links, to be established between, within or among a set of participants.” EX1001, 3:60-64, FIG. 1. Many embodiments of the ’454 patent are described in the context of the situation being some sort of emergency. *See* EX1001, 4:48-62. But the ’454 patent is not limited to such situations. The ’454 patent also provides examples of non-emergency “situations,” including “a social event, such as a concert or festival,” or “a forecasted snow storm” as relevant to “skiing at a popular ski destination.” EX1001, 30:62-63, 31:30-43.

66. Amidon teaches “systems and methods for users to conduct online conferences based on underlying social network structures.” EX1005, 2:54-56. In

Amidon, a social network conference may be created automatically upon detecting various *situations*—e.g., users listening to the same music, a certain number of users in the social network are involved in a conversation (e.g., related to a game), or users sharing content on a particular topic. EX1005, 13:57-14:29. Amidon further teaches that "[u]sers may participate in social network conferences by way of any suitable communication technique(s)." EX1005, 3:4-5. Amidon's teaching of a set of users communicating via a conference, which was created in response to a situation, corresponds to *a situational network*. I provide further details below in my discussion of element [1.1] (regarding Amidon's teachings of a *situation*).

67. Further, in Amidon, a "user can specify the nature and extent of a conference amongst members of a social network based on various parameters, including social network parameters." EX1005, 2:57-60. "Once a conference has been initiated, users participating in the conference can direct messages to desired users in the conference based on the same and/or other parameters." EX1005, 2:60-63. Conference metadata is used to manage a social network conference, and includes "data identifying one or more members of a social network and at least one distribution parameter." EX1005, 3:22-25. "Based on the social network data and the distribution parameter(s), multiple other users may be identified for inclusion in a social network conference" (i.e., *creating a projection*). EX1005,

3:33-36. I provide further details below in my discussion of element [1.2] (regarding Amidon's teachings of *forming a projection*).

68. Thus, in my opinion, Amidon teaches the preamble.

2. [1.1]: (a) creating, by an event node server, an event node in a multi-dimensional personal information network, the event node corresponding to a situation

69. In my opinion, Amidon teaches this element.

70. *First*, Amidon teaches a *multi-dimensional personal information network*. The '454 patent uses the terms "multi-dimensional personal information network" and "N-dimensional social network (NDSN)" interchangeably. *See* EX1001, 5:61-65, 7:37-41, 14:28-31. According to the '454 patent, an NDSN "captures and manages multi-dimensional relationships between persons and other entities that are users of the network." EX1001, 14:28-31. "The NDSN uses multiple dimensions of association to characterize the relationships between users or members." EX1001, 14:36-37. For example, the NDSN uses multiple dimensions to characterize the relationship between two or more users, such as "friendship," "family, professional connection, consumer (e.g., consumer-to-merchant) relationship and healthcare-relation (e.g., providers, insurers, etc.)." EX1001, 14:36-43. In the '454 patent, "[n]odes may connect via different dimensions." EX1001, 14:64-65.

71. Amidon's social network 10, shown in Figure 1 below, discloses a multi-dimensional personal information network.

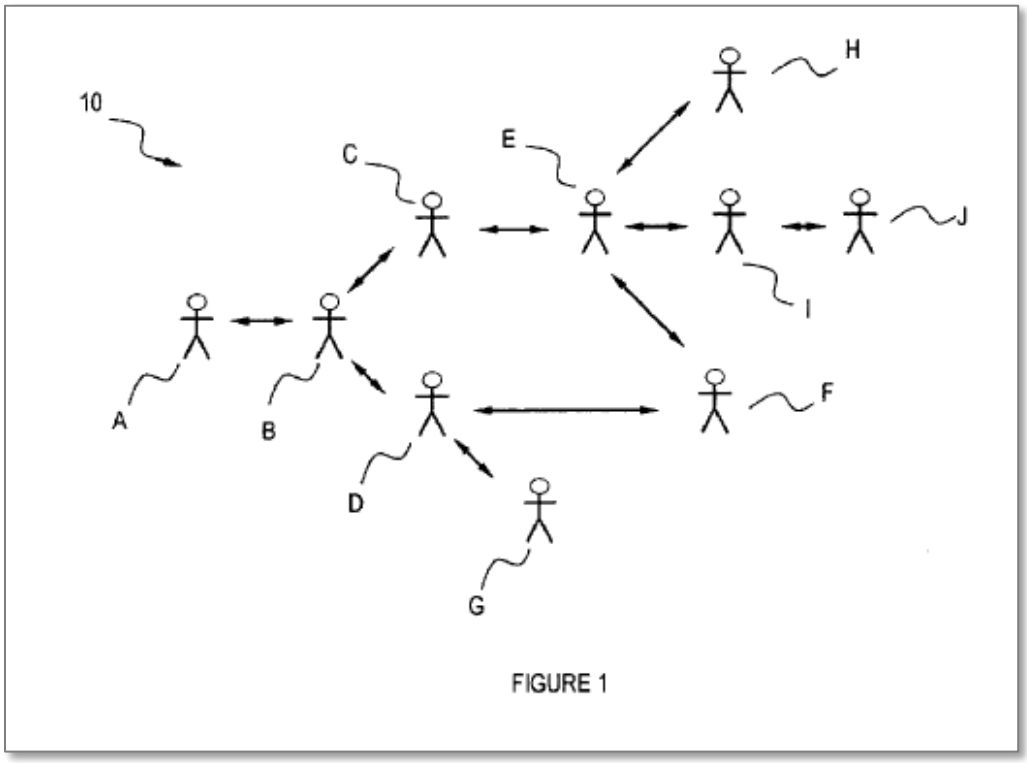

EX1005, FIG. 1.

72. Members of Amidon's social network may be "linked to one another through *one or more types* of *social connections*," including, for example, "common friendship, place or field of employment, place of education, place of residence, membership in a club or other group, or common hobbies or topical interests." EX1005, 1:27-38.[1] In Figure 1, "links between users A, B, C, D, E, F, G, H, I, and J are shown by double-ended arrows." EX1005, 6:60-63. Amidon further

[1] Emphasis added throughout, unless otherwise indicated.

teaches that "one of skill in the art will recognize that social networks may be much more extensive than social network 10," and, for example, "links between friends (or other contacts) … may be densely intertwined and overlap extensively." EX1005, 7:38-47. Like in the '454 patent, the relationships between members of Amidon's social network are characterized in multiple dimensions, i.e., friendship, place of employment, common hobbies, etc. Thus, Amidon's social network 10 is a *multi-dimensional personal information network*.

73. Amidon's social network 10 "may be used as the basis for one or more social network conferences." EX1005, 6:58-60. Figure 2 illustrates a system 12 that supports social network based conferencing. EX1005, 8:1-3.

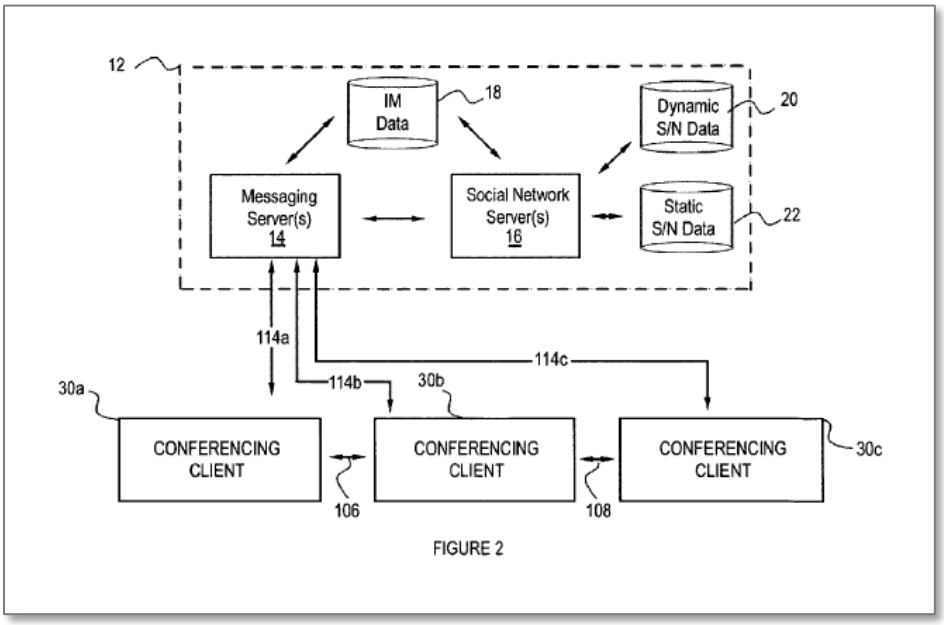

EX1005, FIG. 2.

74. System 12 includes messaging server 14 and social network server 16. EX1005, 8:3-5. Messaging server 14 facilitates sending messages between users. EX1005, 8:44-9:8. Social network server 16 defines social network relationships and preferences, and stores data defining social networks, member data (e.g., profile information), relationships, etc. EX1005, 9:9-38. Each of conferencing clients 30a, 30b, 30c comprises one or more computing devices that interface with system 12. EX1005, 8:12-35.

75. A social network conference can be accessed, for example, in window 200 of a user interface such as that shown in Amidon's Figure 4. EX1005, FIG. 4, 16:65-18:50 (describing the features of window 200).

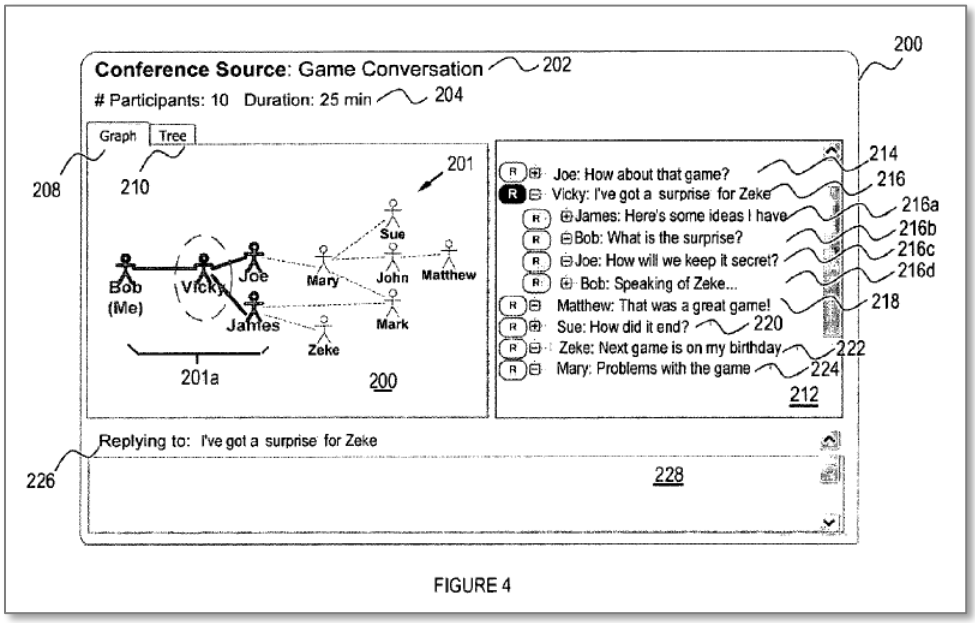

EX1005, FIG. 4.

76. *Second*, Amidon teaches *creating, by an event node server, an event node*. Amidon's social network server 16 (i.e., *an event node server*) "uses the distribution parameters and other information to assemble a participant list for potential inclusion in the social network conference." EX1005, 10:37-39, FIG. 2. "Data defining the social network conference, including the participant list, is then stored in computer-readable form. For example, data defining social network conferences may be maintained in one or more additional databases accessible by social network conferencing system 12." EX1005, 10:40-44; *see also* EX1005, 3:36-39 ("Once the other users have been identified, the social network conference is tracked, including storing data defining the conference in at least one computer-readable medium."). Amidon also teaches that each message in a conference may be tracked by a database record and/or that messages may be cached. EX1005, 15:18-46.

77. Amidon's social network conference (as defined by the stored data and accessible via window 200) teaches the claimed *event node*. "[C]onferencing system 12," Amidon teaches, "may store data defining social network conferences in any suitable fashion and location(s)." EX1005, 15:6-10, FIG. 3. This is consistent with the '454 patent's description of a node as "provid[ing] an associated entity with the ability to store and manage [its] profile and relationships with other users of the [social network]." EX1001, 14:62-64.

78. This also is consistent with how a POSA would have understood the term "node," i.e., that nodes may represent people, organizations, communities, locations, websites, or any other unit that is part of the network. For example, Vasudev describes that "nodes can represent persons, locations, entities, information, and the like," with "nodes [being] typically arranged with directed edges that establish connections between the nodes." EX1010, 1:13-16; *see also* EX1010, 3:56-59 ("Nodes in the social network can include, but are not limited to, a user, a friend, a relative, a classmate, a location, a resource, a contact, a domain, a message address, and a member."). As another example, Wellman identifies the "social network concept of *ties* linking *nodes* in a social system," describing examples of nodes as "persons, groups, organizations, or clusters of ties." EX1016, 157.

79. Amidon's conferencing system 12 supports multiple conference formation options. EX1005, 13:34-35. For example, system 12 supports conference formation based on user preferences and past activity. EX1005, 13:57-60. As another example, "a user may provide for the system to automatically form a conference including all users currently listening to the same song, music by the same artist, music of the same genre, etc." EX1005, 13:66-14:3. "Other conferences may be formed based on network activity, such as sharing content of a

particular data type (photos, movies, etc.) and/or content having similar metadata (sharing of particular music, songs, movies, etc.).” EX1005, 14:3-7.

80. Further, in Amidon, “[s]ocial network server 16 [(i.e., the *event node server*)] may be configured to analyze data describing current messaging sessions or other activity, such as social network circuit activity, and periodically compare such data to conference formation parameters provided by one or more users.” EX1005, 14:14-18. From Amidon-971, which is incorporated by reference into Amidon, a POSA would have understood that “social network circuits are defined on the basis of live communication links between users.” EX1008, 11:49-50; EX1005, 1:6-10. Amidon-971 further describes that a “social network circuit includes two or more members of a social network in live communication with one another.” EX1008, Abstract. Thus, a POSA would have understood “social network circuit activity” in Amidon to include, for example, active communication between users of the social network.

81. Amidon continues, describing “a user may indicate that the user wishes to automatically create a new conference any time the user is involved in a subset of a social network circuit related to a game when the subset includes three or more people. Social network server 16 can access circuit data and automatically form a conference including such users.” EX1005, 14:22-27. In this example, a

conference is automatically formed when a group of three or more users are in live communication (i.e., a conversation) about a game.

82. In another example, a first user identifies that they wish to create a conference including "only those users who are also sharing content on a particular topic ('Vacation')." EX1005, 21:18-26. When social network server 316 determines other users are sharing relevant content, the server provides a "filtered view" of the network, which includes users that meet the first user's criteria. EX1005, 21:21-35. The first user may then invite users to join a conference, and, pending acceptance, social network server 316 creates and tracks a conference including these users. EX1005, 21:27-45.

83. In each of these examples, the social network server determines the participant list and creates the conference. Thus, Amidon teaches the social network conference (as defined by the stored data and accessible via window 200) (i.e., *the event node*) is *created by* the social network server (i.e., *event node server*).

84. *Third*, Amidon teaches the *event node correspond[s] to a situation.* The '454 patent provides several examples of "situations," including "a social event, such as a concert or festival." EX1001, 30:62-63. Other examples include "weather phenomenon, such as hurricanes, tornadoes, severe thunderstorms, or winter storms; emergency situations, such as building fires, aircraft crashes, or

toxic substance releases; natural disasters, such as earthquakes, tsunamis, or floods; weather related activities, such as skiing or surfing; navigation and/or travel incidents, such as road closures or construction, vehicle accidents, traffic congestion, roadway debris, or air turbulence; and public health crises, such as disease outbreak." EX1001, 4:48-57. Claim 1 broadly recites "a situation" with no further limitation.

85. In Amidon, a social network conference (i.e., *the event node*) is created by social network server 16 (i.e., *the event node server*) upon detecting various *situations*—e.g., users listening to the same music, a certain number of users in the social network are involved in a conversation (e.g., related to a game), or users sharing content on a particular topic. EX1005, 13:57-14:29. Thus, the social network conference (as defined by the stored data and accessible via window 200) (i.e., *the event node*) *corresponds to the situation*. Further, a POSA would have understood that, regardless of the *situation* to which the event node corresponds, the same social network architecture would be used to implement the system and methods of the challenged claims. In other words, the claimed method operates in the same way regardless of the subject matter of the *situation*.

86. Thus, in my opinion, Amidon teaches element [1.1].

3. [1.2]: (b) forming a projection of nodes of the situational network using geographic locations of a plurality of devices corresponding to nodes in the multi-dimensional personal information network

87. In my opinion, Amidon teaches this element.

88. *First*, Amidon teaches *forming a projection of nodes of the situational network.* According to Amidon, conference metadata is used to manage a social network conference and includes "data identifying one or more members of a social network and at least one distribution parameter." EX1005, 3:22-25. "Based on the social network data and the distribution parameter(s)," Amidon's system identifies "multiple other users . . . for inclusion in a social network conference" (*i.e., form[s] a projection of nodes of the situational network*). EX1005, 3:33-36; *see also* EX1005, 10:37-39 ("Social network server 16 then uses the distribution parameters and other information to assemble a participant list for potential inclusion in the social network conference."), 21:21-22 ("For each parameter set, application 340 renders a filtered view of the social network"). This list of users for possible inclusion in the conference is the claimed *projection*. This is consistent with the '454 patent's description of "a 'projected' view" as "a subset of the nodes" of the social network. EX1001, 16:26-27; *see also* EX1001, 21:65-67 (indicating that "a 'projected' view" is "also referred to as a projection"). The '454 patent also describes that the "projected view may be created along one or several dimensions of the NDSN," based on, for example, user interests (e.g., cooking) or

geographic location (e.g., users in a certain zip code or with a particular travel destination). EX1001, 16:26-47, 21:65-22:50. In the same way, Amidon's distribution parameters—that define the subset of users included in the conference—may include degree(s) of separation relative to a distributing or other user; "user parameters, such as user identity, membership in a group, interests, demographic characteristics, and the like"; "user activity" such as content sharing; "classifications of user relationships" such as friend, coworker, family, etc.; or geographic parameters. EX1005, 12:37-65.

89. *Second*, Amidon also discloses that "participation [in a social network conference] may be defined *geographically*, such as limiting a conference to users within a particular locale or within a certain distance from one another." EX1005, 4:6-9; *see also* EX1005, 12:37-59 (conference participation parameters may include geographical parameters). Amidon further recognizes that "*user devices* and/or the conferencing system *may support location-based services* such that the location of particular users can be determined." EX1005, 12:59-61. "Based on the user location data, conference participation can be determined based on geographical parameters, such as users within a certain distance, users from a particular location, and so on." EX1005, 12:62-65.

90. Thus, in my opinion, Amidon teaches element [1.2].

4. [1.3]: (c) transmitting an invitation to establish a link with the event node server to the devices corresponding to each node in the projection formed in step (b)

91. In my opinion, Amidon teaches this element.

92. *First*, Amidon teaches *transmitting an invitation … to the devices corresponding to each node in the projection formed in step (b)*. Amidon discloses that invitations are transmitted to users to join a social network conference. In one example, the social network server provides a conference participant list (i.e., *the projection*) to the messaging server, which in turn sends an invitation to the users on the list, via their respective computing devices 330, to join the conference. *See* EX1005, 21:3-8; *see also* EX1005, 19:54-67, FIG. 6B. In another example, a user sends a message to other users inviting them to join a conference.[2] *See* EX1005, 21:18-38.

93. Amidon also teaches storing, as part of the data defining a social network conference, a record for each user indicating the status of that user with regard to the conference. EX1005, 15:6-17. The "status indicators may include

[2] Claim 1 does not require the invitation to be transmitted in a particular way from a computer system, and does not foreclose the invitation transmission being initiated by a user.

'active,' '*invited* but inactive,' and '*invited* but declined,'" EX1005, 15:15-17, further indicating that Amidon contemplates inviting users to join conferences.

94. *Second*, Amidon teaches the *invitation* is *to establish a link with the event node server*. Amidon teaches that, for a user to participate in a conference, a link 116 (*a link*) is established between the user's client devices, e.g., device 330, and the social network server 316 (*the event node server*). EX1005, 20:1-7, 20:39-62, FIG. 6B. Thus, a POSA would have understood that in sending an invitation to participate in a conference, Amidon teaches sending an *invitation to establish a link with the event node server*. I provide further details below in my discussion of element [1.5] (regarding Amidon's teachings of *establishing a link*).

95. Thus, in my opinion, Amidon teaches element [1.3].

5. [1.4]: (d) receiving a response from at least one of the devices from step (c) accepting the invitation to establish a link with the event node server

96. In my opinion, Amidon teaches this element.

97. Amidon discloses monitoring for responses to invitations:

> [T]he conferencing system provides feedback as to the conference initiation process. For instance, after inviting various members, [the user] may be presented with a pop-up window and/or other notification(s) of progress. The *window may indicate*, for example,

> which members have received invitations, which members are in the process of responding, and *the response(s) received*.

EX1005, 21:54-61. Thus, in my opinion, Amidon teaches element [1.4].

6. [1.5]: (e) establishing a link with each device accepting the invitation

98. In my opinion, Amidon teaches this element.

99. Amidon teaches *establishing a link with each device accepting the invitation* because Amidon discloses that user devices can participate in a social network conference. For example, Amidon's Figure 4 illustrates an exemplary user interface showing one or more users participating in a social network conference.

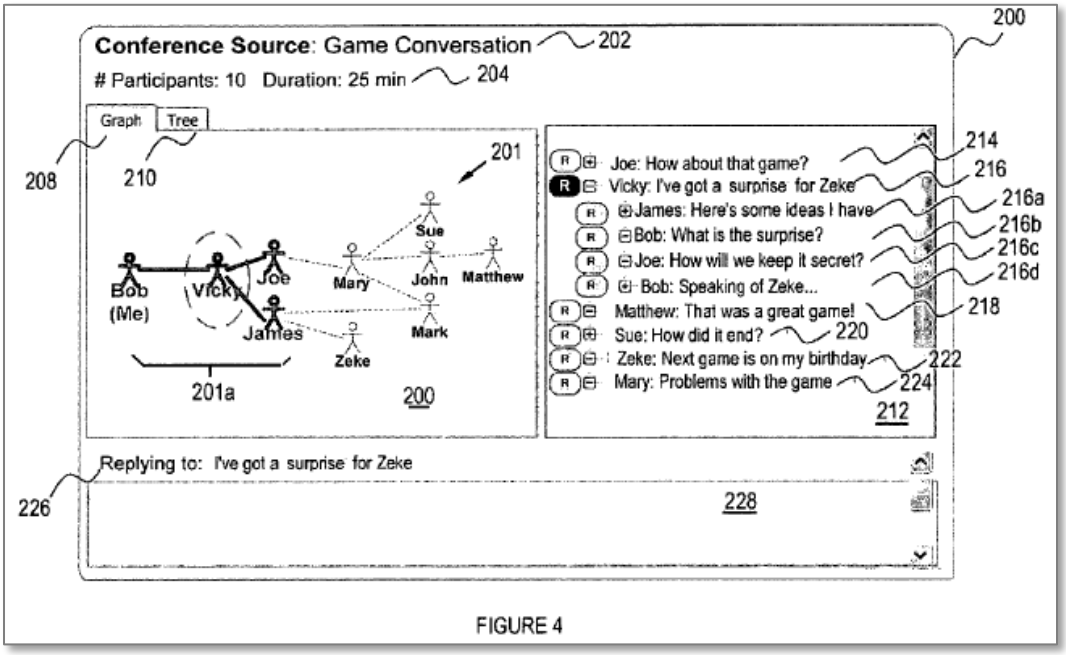

FIGURE 4

EX1005, FIG. 4.

100. To participate in such a social network conference, Amidon teaches that a link 116 (*a link*) is established between the user's client devices, e.g., device

330l, (*devices accepting the invitation*) and the social network server 316 (*the event node server*). *See* EX1005, 20:1-7, 20:39-62; *see also* EX1005, 8:60-9:8 (clients may interface with multiple messaging servers which in turn interface (directly or indirectly) with social network server), 9:9-22 (clients may be in communication with social network server). This is illustrated in Figure 6B (reproduced below):

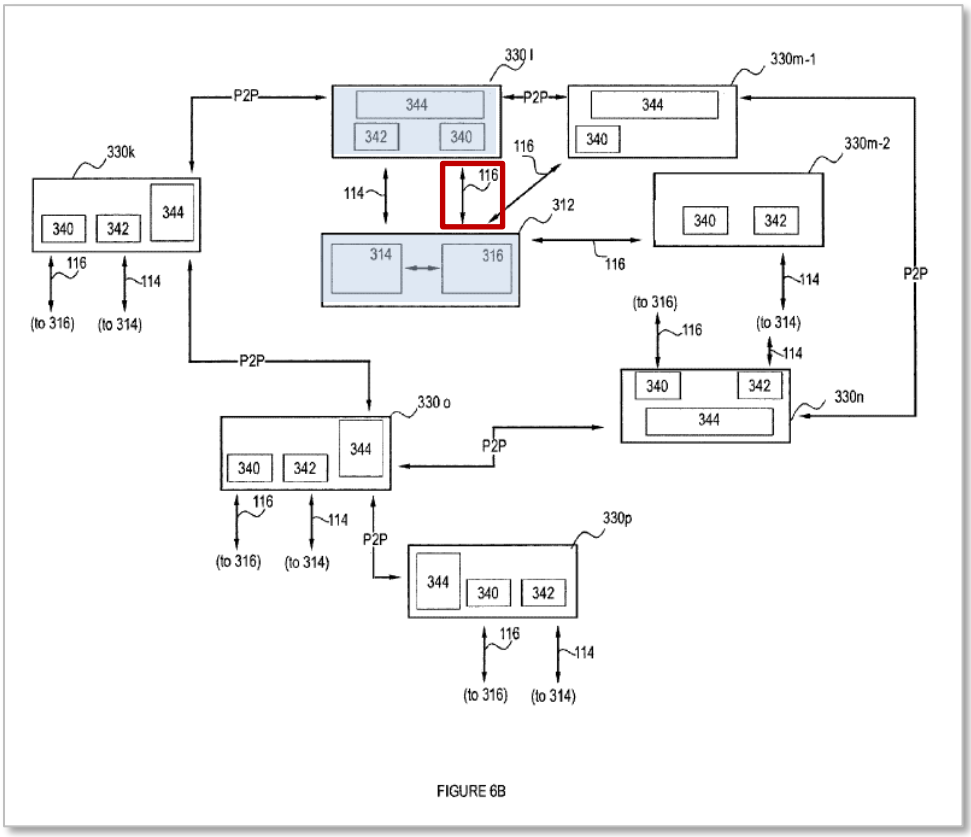

FIG. 6B (annotated).

101. Amidon further describes that user devices may be linked to one or more social networking servers 316, and that social network server 316 both creates the conference and tracks the conference participation. For instance,

Amidon describes that "[s]ocial network conference system 312 may comprise one or more social network servers 316 and one or more messaging servers 314." EX1005, 20:1-3. Further, "each instance of social networking application 340 [(which are executed on the users' computing devices 330)] is in communication with *one or more* social networking servers 316 via a link 116." EX1005, 20:39-45. Conferences are created and tracked by social network server 316. EX1005, 21:36-38, 21:62-63. Given Amidon's disclosure that user devices may be linked to more than one social networking server, and that it is the social networking server that creates and tracks conferences, a POSA would have understood that, to the extent a particular user's device was not previously linked to the particular social network server that creates and tracks the conference to which it has been invited, it would have been obvious that a new link would be established in order to facilitate participation in the conference.

102. Amidon further describes that "in some embodiments multiple social network servers may be involved. For example, if conferences occur based on data from multiple social network services, one or more servers corresponding to each service may be accessed. Each service may have its own related stores of static and/or dynamic social network data. In embodiments involving multiple social network services, a separate conferencing server may be utilized to coordinate the conference by consulting social network servers for each social network or the

various social network servers may be configured to provide conferencing functionality in a coordinated fashion." EX1005, 14:61-15:5.

103. Thus, in my opinion, Amidon teaches element [1.5].

B. Claim 2

104. Claim 2 depends from claim 1 and further recites: "*wherein the event node is created in response to identification of the situation by a situation authority*." In my opinion, Amidon teaches this claim.

105. Amidon discloses that users can identify parameters (i.e., *a situation*) for initiating possible conferences. EX1005, 21:18-61. In that instance, a social network conference and its corresponding database records defining the conference (i.e., *the event node*) are created in response to the user identifying the parameters.

106. Amidon also teaches that the parameters (i.e. *the situation*) are identified by a user (i.e., *a situation authority*), because the term "user" in Amidon "is meant to broadly include not only an individual, but also other entities, such as groups of individuals and organizations when treatable as a single unit." EX1005, 5:5-8. Amidon's broad definition of a "user," which encompasses organizations, teaches the claimed "*situation authority*," which the '454 patent says "include[s], *but [is] not limited to* news organizations, such as news agencies (e.g., CNN), weather agencies (e.g., The Weather Channel), traffic agencies (e.g., Traffic.com), emergency relief organizations (e.g., The American Red Cross), and government

agencies (e.g., local fire departments, state Departments of Transportation, Federal Emergency Management Agency (FEMA))." EX1001, 4:10-17.

107. Thus, in my opinion, Amidon teaches claim 2.

C. Claim 3

108. Claim 3 depends from claim 1 and further recites: "*(f) providing the projection formed in step (b) to each device corresponding to the nodes in the projection that has established a link with the event node server*." In my opinion, Amidon teaches this claim.

109. As I discuss above for element [1.2], in Amidon, the *projection formed in step (b)* is the list of users for possible inclusion in the conference. As I discuss above for element [1.3], an invitation is sent to each device corresponding to nodes in the projection. And as I discuss above for element [1.4], at least one of these devices accepts the invitation.

110. A POSA would have understood that, in at least some instances, every device that is invited accepts the invitation. In these instances, because every device included in the projection is invited, every device in the projection likewise accepts the invitation. In this case, the *projection formed in step (b)* and *each device … that has established a link* correspond to the same subset of nodes in the social network. As discussed below, Amidon teaches claim 3 at least in this instance.

111. Each device 330 (*each device … that has established a link*) participates in the social network conference, for example, via a user interface such as that in Amidon's Figure 4. The user interface of Figure 4 includes a display of social network conference group 201 in the form of a diagram of the users included in the conference. EX1005, 17:2-10. A POSA would have understood that, in the instance when every user of the *projection* accepts the invitation to join the conference and is therefore part of the social network conference group 201, the social network conference group 201 includes the same group of users as those included in the *projection [of nodes] formed in step (b)*. Thus, the diagram of users included in the conference (*the projection*), as shown in Figure 4, is *provided to* each user participating in the conference (*each device … that has established a link*).

112. Thus, in my opinion, Amidon teaches claim 3.

D. Claim 4

113. Claim 4 depends from claim 1 and further recites: "*(f) providing a first set of information about the situation to each device corresponding to the nodes in the projection that has established a link with the event node server*."

114. In my opinion, Amidon teaches this claim.

115. Amidon discloses sending messages about the situation to which the conference is related. As described with respect to Figure 4, thread 214 includes

messages (i.e., *a first set of information*) and replies sent to each user in conference group 201 (i.e., *each device … that has established a link with the event node server*). EX1005, 17:29-30, FIG. 4 (window 20 with conference thread display area 212); *see also* EX1005, 17:38 ("thread 214 may be visible to the whole group"). In the embodiment of Amidon's Figure 4 (where the situation corresponding to the conference is related to a game), users send messages about the game (i.e., *information about the situation*). *See* EX1005, 17:21-35. Amidon describes that "each thread compris[es] data (messages, content, etc.)." EX1005, 17:21-26. At a minimum, it would have been obvious that the "messages" and "content" contained in thread 214 of Amidon would encompass *information* about the topic to which the conference is related (i.e., the *situation*).

116. Further, I have been told that the specific content of information unrelated to the function of the claimed method should not be given patentable weight. I do not provide an opinion as to whether the language of claim 4 is limiting, however, it is my opinion that the claimed method would be performed in the same manner irrespective of the particular content of information that is provided.

117. Thus, in my opinion, Amidon teaches claim 4.

E. Claim 5

118. Claim 5 depends from claim 4 and further recites: "*wherein the first set of information in step (f) includes targeted advertisements*." In my opinion, Amidon teaches this claim because Amidon discloses that "a user may direct announcements or sales pitches toward members of a social network based on membership parameters, … such as demographic groupings." EX1005, 2:30-35. Directing a sales pitch to certain members based on demographics constitutes a *targeted advertisement*. This is consistent with the '454 patent's description that a user's affiliation with the situation, which may in turn be determined in part by analyzing personal data about the user, is used as a basis for delivering the targeted advertisements. EX1001, 27:41-42, 27:55-57. This also is consistent with how a POSA would have understood the term "targeted advertisements" in 2007. For example, Eldering describes targeting consumers with advertisements based on the consumer's demographic information and product preferences. EX1011, ¶¶7, 14, 25, 33; *see also, e.g.*, EX1012, 2 (disclosing collecting "demographic information" so that "advertising can be carried out very precisely and with a clear focus on the target group").

119. Thus, in my opinion, Amidon teaches claim 5.

F. Claim 6

120. Claim 6 depends from claim 4 and further recites: "*(f) receiving additional sets of information about the situation from at least one of the devices corresponding to the nodes in the projection that have established a link with the event node server*;" and "*(g) distributing updated information about the situation based on the additional sets of information to the devices corresponding to the nodes in the projection that have established a link with the event node server*."

121. In my opinion, Amidon teaches the elements of this claim.

122. Amidon teaches multiple users sending messages to the entire conference group. For example, in the embodiment of Figure 4, the *situation* corresponding to the conference in Figure 4 is related to a game. Thread 214 (*first set of information* of claim 4) was initiated with a message by Joe. EX1005, 17:29-31. Message 218 is sent to the group by Matthew, and messages 222 and 224 are from Zeke and Mary, respectively. EX1005, 17:31-35. Messages 218, 222, 224 constitute *additional sets of information about the situation* (as compared to thread 214, which corresponds to the *first set of information about the situation* recited in claim 4). In other words, Matthew's, Zeke's, and Mary's messages are *additional sets of information* about the game (i.e., *about the situation*).

123. As described in Amidon, messages from user clients are routed to server 14, which in turn provides information to social network server 16, and then

relays the messages (i.e., *updated information*) to the clients of the other users. EX1005, 10:59-67. Further, at a minimum, it would have been obvious that the additional messages would include *updated information* because the group was formed for communication related to the game and the users are discussing the game. For example, Mary's message indicates there are "[p]roblems with the game," which is updated information. EX1005, FIG. 5. Further, as I discuss above for claim 4, here, the claimed method would be performed in the same manner irrespective of the particular content of information that is provided. In other words, the specific content of information is unrelated to the function of the claimed method.

124. In this way, the *additional sets of information* are *received from at least one of the devices*, and then *updated information* is *distributed to the devices*.

125. Thus, in my opinion, Amidon teaches claim 6.

G. Claim 7

126. Claim 7 depends from claim 1 and further recites: "*wherein the event node server forms one or more different projections of the nodes, each of the one or more projections receiving geographically relevant information from the event node server*." In my opinion, Amidon teaches this claim.

127. Amidon discloses that messages may be sent to the entire conference or may be defined by additional parameters to have further limited distribution.

EX1005, 10:45-58. In the case of a more limited distribution, server 16 (i.e., *the event node server*) "determines the participants in the conference that meet the criterion" (i.e., *forms one or more different projections*). *See* EX1005, 11:1-14.

128. As I discuss above regarding claim element [1.2], Amidon also discloses that "participation [in a social network conference] may be defined *geographically*, such as limiting a conference to users within a particular locale or within a certain distance from one another." EX1005, 4:6-9; *see also* EX1005, 12:37-59 (conference participation parameters may include geographical parameters). It would have been obvious to provide geographically relevant information to users in a geographically defined conference because this information would be particularly useful to users in that geographic location.

129. Thus, in my opinion, Amidon teaches claim 7.

H. Independent Claim 10

1. [10.P] A method of creating a projection of a situational network, the method comprising

130. To the extent the preamble is determined to be limiting, it is my opinion that Amidon teaches the preamble, for the reasons I discuss above for element [1.P].

2. [10.1] (a) receiving, by a first device corresponding to a node in a multi-dimensional personal information network, an invitation to establish a link with an event node server in response to the first device being included in a projection of nodes of the multi-dimensional personal information network

131. In my opinion, Amidon teaches element [10.1] for the reasons I discuss above for elements [1.1], [1.2], and [1.3]. In particular, as discussed for element [1.3], Amidon discloses transmitting invitations to users, via their respective computing devices 330, to join a social network conference. Thus, Amidon correspondingly discloses the computing devices 330 corresponding to the users *receiving* the invitation, and teaches element [10.1].

3. [10.2] (b) transmitting a response accepting the invitation to establish a link with the event node server;

132. In my opinion, Amidon teaches element [10.2] for the reasons I discuss above for element [1.4]. In particular, as discussed for element [1.4], Amidon discloses, or at least suggests, receiving a response accepting the invitation from at least one of the devices. Thus, Amidon correspondingly discloses, or at least suggests, the devices *transmitting* the response, and teaches element [10.2].

4. [10.3] (c) establishing a link with the event node server; and

133. In my opinion, Amidon teaches element [10.3] for the reasons I discuss above for elements [1.3] and [1.5].

5. [10.4] (d) receiving information about the situation from the event node server.

134. In my opinion, Amidon teaches element [10.4] for the reasons I discuss above for claim 4. As discussed for claim 4, Amidon discloses sending messages (i.e., *information*) about the situation to which the conference is related. Thus, Amidon correspondingly discloses users *receiving* those messages, and, in my opinion, teaches element [10.4].

I. Claim 11

135. Claim 11 depends from claim 10 and further recites: "*wherein the invitation is received based on a geographic proximity of the first device with other devices in the multi-dimensional personal information network*." In my opinion, Amidon teaches this claim.

136. Amidon discloses that "participation [in a social network conference] may be defined *geographically*, such as limiting a conference to users within a particular locale or *within a certain distance from one another*." EX1005, 4:6-9; *see also* EX1005, 12:37-59 (conference participation parameters may include geographical parameters). I provide further details above in my discussion of element [1.2].

137. Thus, in my opinion, Amidon teaches claim 11.

J. Claim 12

138. Claim 12 depends from claim 10 and further recites: "*wherein the event node server corresponds to an event node of the situational network created in response to identification of the situation by a situation authority*." In my opinion, Amidon teaches claim 12 for the reasons I discuss above for element [1.1] and claim 2.

K. Claim 13

139. Claim 13 depends from claim 10 and further recites: "*(e) receiving the projection of the nodes of the situational network from step (a) from the event node server*." In my opinion, Amidon teaches this claim.

140. As I discuss above for element [1.2], Amidon discloses that social network server 16 (i.e., *event node server*) assembles a participant list for potential inclusion in the social network conference (i.e., *projection of nodes of the situation network*). EX1005, 10:37-39. Amidon further discloses that "[social network s]erver 316 may provide a conference participant list to messaging server 314, which sends one or more notifications to the requisite users." EX1005, 21:3-5. Messaging server 314, correspondingly, *receives* the participant list (i.e., *projection of nodes of the situational network*).

141. Thus, in my opinion, Amidon teaches claim 13.

L. Claim 14

142. Claim 14 depends from claim 13 and further recites: "*(f) inviting at least one other device included in the projection to establish a link with the first device;*" "*(g) connecting to the at least one other device from step (e)*[3] *accepting the invitation;*" and "*(h) sharing information related to the situation with the at least one other device*." In my opinion, Amidon teaches the elements of this claim.

143. Regarding steps (f) and (g), Amidon teaches that, in some embodiments, the messaging application 342 of a computing devices 330 "may be able to connect to other messaging clients [342 of other computing devices 330] without the need to pass the messages through a central server." EX1005, 20:48-51, FIG. 6B. As described for claim elements [10.1] and [10.2], Amidon's client devices receive an invitation to join a social network conference and send a response to the invitation. I provide further details in my discussion above of claim elements [1.3], [1.4]. Based on Amidon's teachings, it would have been obvious to invite more than one user to join the conference (i.e., *at least one other device*). A POSA would have likewise found it obvious for the *first device to invite at least*

[3] I understand this to be a typographical error, referring to "step (f)" of claim 14, in which the "at least one other device" is first recited.

one other device to establish a connection, based on Amidon's express teachings to do so in other embodiments.

144. Finally, regarding step (h) of claim 14, for the reasons I discuss above for claim 4, Amidon discloses sending messages (i.e., information) about the situation to which the conference is related, and sending those messages to each user in the conference group, each user receiving the message being associated with at least one other device.

145. Thus, in my opinion, Amidon teaches claim 14.

M. Claim 15

146. Claim 15 depends from claim 14 and further recites: "*wherein the connections established in step (g) have an order of separation of one*." In my opinion, Amidon teaches this claim.

147. Amidon teaches *an order of separation of one* because Amidon discloses "a first user may provide one or more distribution parameter(s) that identify inclusion or exclusion rules, such as a *desired degree of separation* (relative to the first user) restricting which other users are to be included in the conference. Based on the parameter(s), the conferencing system may determine which social network users fall within the desired degree of situation [(sic – separation)] and include them in the social network conference." EX1005, 3:40-47. Amidon also expressly teaches that a user "could specify users within a *single*

degree of separation." EX1005, 10:11-24; *see also* EX1005, 11:4-6 ("user A may specify that the message is to be distributed only to members within *one degree of separation*").

148. Thus, in my opinion, Amidon teaches claim 15.

N. Claim 16

149. Claim 16 depends from claim 14 and further recites: "*wherein the connections established in step (g) are multi-dimensional*." In my opinion, Amidon teaches this claim.

150. Amidon teaches that the conference participant selection can be based on multiple distribution parameters, i.e., *multi-dimensional*. *See* EX1005, 3:22-25, 3:34-47. And "[u]sers may specify any number or *combination of* rules, preferences, and *parameters* in defining the extent of conference participation." EX1005, 12:37-40. For example, the extent of conference participation may be defined by degree of separation, user identity, membership in a group, interests, demographic characteristics, parameters based on user activity (e.g., users participating in content sharing), characterization of user relationships (e.g., friend, co-worker), and geography. EX1005, 12:40-65. Each of these examples corresponds to a *dimension* by which the *connections* may be characterized.

151. Thus, in my opinion, Amidon teaches claim 16.

O. Claim 17

152. Claim 17 depends from claim 16 and further recites: "*wherein at least one of the dimensions corresponds to the situation*." In my opinion, Amidon teaches this claim.

153. As described above for elements [1.1] and [10.1], Amidon teaches various *situations* in response to which a social network conference may be initiated—e.g., users listening to the same music, a certain number of users in the social network are involved in a conversation (e.g., related to a game), or users sharing content on a particular topic. As discussed for claim 16, one of the parameters (i.e., *dimensions*) in Amidon upon which conference participant selection can be based is user activity (e.g., users participating in content sharing). When users are sharing content on a particular topic (the example *situation*), and a conference is formed based on the user activity of content sharing (the example *dimension*), the *dimension corresponds to the situation* because both are related to the user's content sharing activity.

154. Thus, in my opinion, Amidon teaches claim 17.

P. Claim 19

155. Claim 19 depends from claim 10 and further recites: "*(e) providing information about the situation to the event node server*." In my opinion, Amidon teaches this claim.

156. As I discuss above for claim 6, Amidon teaches that messages (i.e., *information about the situation*) from user clients are routed to server 14, which in turn provides information to social network server 16 (i.e., *the event node server*). EX1005, 10:59-67. In this way, the *information about the situation* is *provided* to the *event node server*.

157. Thus, in my opinion, Amidon teaches claim 19.

Q. Independent Claim 20

158. Claim 20 recites a *system for creating a projection of a situational network*. The system of claim 20 includes an *event node server* configured to perform functions similar to the steps of method claim 1. The system of claim 20 further includes a *plurality of devices* configured to perform functions similar to the steps of method claim 10. In my opinion, Amidon teaches this claim.

159. As I discuss above for claim 1, Amidon's system 12 supports social network based conferencing. EX1005, 8:1-3, FIG. 2. As also discussed, social network server 16 of system 12 teaches *an event node server*. *See* claim [1]. As I discuss above for claim elements [1.1], [1.2], [1.3], [1.4.], and [1.5], Amidon teaches the functionalities of the event node server recited in claim 20. Additionally, in claim 20, the *event node server* is *corresponding to a situation authority*. As I discuss above for claim 2, Amidon teaches that a social network conference and its corresponding database records defining the conference (i.e., *the*

event node) are created in response to a user (i.e., *a situation authority*) identifying parameters (i.e., *a situation*) for initiating a conference. It would have been obvious that social network server 16 (i.e., *event node server*) *correspond[s] to*, or relates to, the user (i.e., *situation authority*). This is because, in Amidon, the social network server is related to, and thus *correspond[s] to*, the users of the social network. EX1005, 9:10-11 ("Social network server 16 may interact with users of clients 30a, 30b, and 30c…"), 9:23-38 (describing how social network server 16 stores data defining, e.g., social network(s) and social network member (i.e., user) data).

160. Further, Amidon teaches a plurality of conferencing devices 30a, 30b, 30c, each of which comprises one or more computing devices. EX1005, 8:12-35. I provide further details above in my discussion of claim element [1.1]. As I discuss above for claim elements [10.1], [10.2], and [10.4], Amidon teaches the functionalities of the computing devices recited in claim 20.

161. Thus, in my opinion, Amidon teaches the system of claim 20.

XIII. GROUND 2: THE COMBINATION OF WONG AND GOGIC RENDERS OBVIOUS CLAIMS 1-4, 6, 8-18, AND 20.

162. In my opinion, the combination of Wong and Gogic renders obvious claims 1-4, 6, 8-18, and 20.

A. A POSA would have found it obvious to combine Wong and Gogic.

163. In my opinion, a POSA would have been motivated to modify Wong's social network communication system to incorporate Gogic's teachings of an ad-hoc location-based communication group.

164. Prior to 2007, it was known that online forums could be used to aid in emergency planning and response. EX1009, 56. For example, in 2005 during Hurricane Katrina, the website www.katrina.com served as a popular online resource for hurricane information, including pointers to other websites and a message board to help locate missing people. EX1009, 56. Other websites were created to collect and share location-specific information about the storm and the damage in its aftermath. EX1009, 56. Wong expressly teaches that "notification of updates" or "alerts" may be communicated via its social network. EX1006, ¶44. A POSA would have recognized that it would be useful in Wong's social network system to be able to send such updates or alerts to users located in an affected area during an emergency, similar to the known use of online forums to provide this information. This would have been a natural extension of using online forums. Around the time of the invention, a transition from topic-focused online communities, such as forums, to person-focused networks, such as social network sites was occurring. *See, e.g.*, EX1013, 219 ("Early public online communities such as Usenet and public discussion forums were structured by topics or

according to topical hierarchies, but social network sites are structured as personal (or 'egocentric') networks, with the individual at the center of their own community.").

165. This would have led to Gogic. Like Wong, Gogic is directed to group communication over a network. Gogic teaches that "[d]uring emergency situations, the formation of a communication group based on proximity of other users, or based on user's location being confined to a given area, may allow emergency services to be more efficiently or more appropriately deployed." EX1007, 4:20-24.

166. In my opinion, a POSA would have had a reasonable expectation of success in implementing Gogic's ad-hoc location-based communication group in Wong's social network communication system. Gogic expressly recognizes that its invention is not limited to the wireless CDMA communication system described in the exemplary embodiments, and that it can be used in "any wireless communication system including GSM systems, AMPS systems, TDMA systems, satellite communication systems, as well as other communications systems." EX1007, 4:40-57. Gogic further discloses that its invention is not limited to wireless communication systems, but can also be used with, for example, "wireline telephones, paging devices, [and] portable or desktop computers," and that it applies to "all of the various forms of media, including, but not limited to, voice, speech, data, [and] video." EX1007, 4:46-57. In Wong, users communicate with

other users via the social network, and may access the social network over any device capable of communicating over a network, such as, for example, "laptops, desktops, handheld, personal digital assistants, [or] mobile telephones." EX1006, ¶17. Thus, both Gogic and Wong envision communication using similar technologies.

167. A POSA would have recognized that Gogic's teachings of an ad-hoc location-based communication group could be implemented in the "communication system" of Wong's social network. In my opinion, a POSA would have been motivated to do so, at least in an emergency situation, to allow for efficient communication in an emergency and for appropriate deployment of emergency services. Gogic expressly recognizes this motivation, noting that "[i]n emergency communication situations, such as those arising from natural or man-made disasters, it is critical to enable forms of communication that are efficient, so that maximum number of affected people can access limited resources, such as wireless telecommunication channels." EX1007, 1:22-26. Gogic further describes that "[d]uring emergency situations, the formation of a communication group based on proximity of other users, or based on user's location being confined to a given area, may allow emergency services to be more efficiently or more appropriately deployed." EX1007, 4:20-24.

168. Further, as discussed, a POSA would have had a reasonable expectation of success in implementing the combination. The proposed combination simply combines prior-art elements (e.g., combines Wong's social network communication system with Gogic's ad-hoc location-based communication group) according to known methods to yield predictable results, and is also the use of a known technique (implementing Gogic's ad-hoc location-based communication group) to improve similar devices (Wong's social network communication system) in the same way.

B. Independent Claim 1

1. [1.P]: A method of creating a projection of a situational network, the method comprising

169. To the extent the preamble is determined to be limiting, it is my opinion that the combination of Wong and Gogic teaches the preamble.

170. Gogic discloses a "method for providing group communication services to an ad-hoc group formed according to vicinity with other users of communication device(s) (CD), or according to proximity of a given locality, in an existing communication system." EX1007, 4:16-20. For example, "[d]uring emergency situations, the formation of a communication group based on proximity of other users, or based on user's location being confined to a given area, may allow emergency services to be more efficiently or more appropriately deployed." EX1007, 4:20-24.

171. In Wong, "[t]he network … 24 can be viewed in many ways, such as graphically as a set of nodes 30 connected by their associated linkages 32." EX1006, ¶35. "The network … can be presented graphically by setting a single node as the root of the network … and displaying a set number of linkages 32 radiating from the root node." EX1006, ¶35. This is consistent with the '454 patent's description of "a 'projected' view" as "a subset of the nodes" of the NDSN. EX1001, 16:26-27; *see also* EX1001, 21:65-67 (indicating that "a 'projected' view" is "also referred to as a projection").

172. As I discuss above, a POSA would have been motivated to incorporate Gogic's teachings of an ad-hoc location-based communication group into Wong's social network communication system to be able to, for example, send updates or alerts to users located in an affected area during an emergency. The updates or alerts would be most useful for these users located in the affected area. Thus, in the Wong-Gogic combination, a POSA would have been motivated to select the particular subset of nodes in Wong's social network that are invited to participate in the ad-hoc location-based communication group based on the location thereof, e.g., in the affected area.

173. Thus, in my opinion, the Wong-Gogic combination teaches the preamble.

2. [1.1]: (a) creating, by an event node server, an event node in a multi-dimensional personal information network, the event node corresponding to a situation

174. In my opinion, the Wong-Gogic combination teaches this element.

175. Wong's network 24 teaches a *multi-dimensional personal information network*.

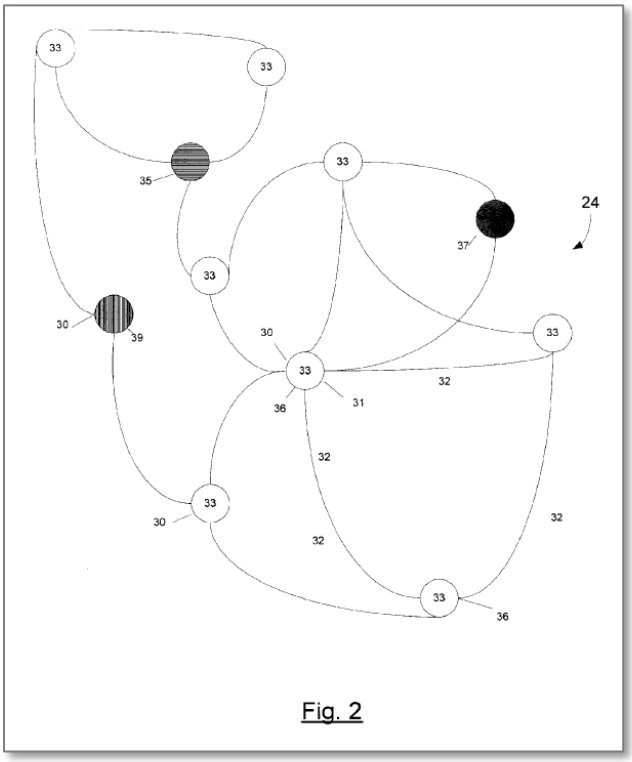

EX1006, FIG. 2.

176. As seen in Wong's Figure 2, network 24 includes nodes 30 joined by connections 32, also called "linkages." EX1006, ¶21. Each node represents a living or non-living entity, such as "people 33 (living and deceased), places 35, objects 37 and animals 39." EX1006, ¶21. Linkages 32 have a defined linkage type, "representing the actual type relationship which exists between the person, place,

object or animal represented by the linked nodes." EX1006, ¶24. "Nodes can be linked by *more than one* linkage type, representing the multiple types of relationships between the entities represented by the nodes." EX1006, ¶24; *see also* EX1006, ¶33 ("The relationship of a node to another node within the same network of living and non-living entities can also be represented by more than one defined linkage type."), FIG. 4. In Wong, each node contains communication tools for "communicat[ing] with other entities within or outside the network using the features of the social network" and/or "communicat[ing] with nodes in the same network." EX1006, ¶19; *see* EX1006, ¶¶31-32.

177. Wong describes four exemplary "main node types"—people, places, objects, animals—but also teaches that there may be additional main node types. EX1006, ¶¶21-22. Wong also discloses creating new nodes. EX1006, ¶¶26-27, FIGs. 5, 6. As I discuss above, Wong teaches that "notification of updates" or "alerts" may be communicated via its social network. EX1006, ¶44. Gogic teaches that "dispatcher 400 identifies the occurrence or presence of an event or condition wherein communications between proximately located users could be beneficial." EX1007, 10:18-21. In response to identifying the event or condition, Gogic creates an ad-hoc communication group as initiated, for example, by dispatcher 400 via administrator interface 226. EX1007, 7:25-34, 10:16-11:13, FIG. 4. Based on these teachings of Gogic—and because, in Wong, communication happens between

nodes, EX1006, ¶44—a POSA would have recognized that a new node (i.e., *an event node*) related to the identified event or condition (i.e., *a situation*) would be useful in Wong's social network to facilitate communication related to the event or condition. The nodes/users linked to this new event node in Wong's system would, thus, form an ad-hoc communication group, which is desirable as taught by Gogic.

178. This is consistent with how a POSA would have understood the term "node." For example, Vasudev describes that "nodes can represent persons, locations, entities, information, and the like," with "nodes [being] typically arranged with directed edges that establish connections between the nodes." EX1010, 1:13-16; *see also* EX1010, 3:56-59 ("Nodes in the social network can include, but are not limited to, a user, a friend, a relative, a classmate, a location, a resource, a contact, a domain, a message address, and a member.").

179. In Wong, each node can contain, for example, information pertaining to the person or entity that it represents, a home page, communication tools, data and files, storage space, network information, and/or editing tools. EX1006, ¶¶19, 31-32. A POSA would have understood that each node is created by and associated with a server to provide these capabilities. *See* EX1006, ¶17 ("A social network server or servers 20 maintain a system comprising an Internet website, database and associated data, which is accessible to users 10. Server 20 has the hardware and software required to operate an internet-accessible social network, including

web server, email server, databases, data storage and the like."), ¶18 (creation of nodes is "carried out in a manner well known to web site programmers"). Wong's server 20, thus, discloses or at least suggests the claimed *event node server*. This is consistent with the '454 patent's teaching that "users may have their nodes hosted in a common location, e.g., on a local or remote server." EX1001, 15:25-27.

180. Thus, in my opinion, the Wong-Gogic combination teaches element [1.1].

3. [1.2]: (b) forming a projection of nodes of the situational network using geographic locations of a plurality of devices corresponding to nodes in the multi-dimensional personal information network

181. In my opinion, the Wong-Gogic combination teaches this element.

182. Wong teaches *forming a projection of nodes … in the multi-dimensional personal information network*. In Wong, a user "with an active node can view the connection, one or a series of defined linkages of nodes, between its own node and any other node in the network of living and non-living entities." EX1006, ¶34. "The network … 24 can be viewed in many ways, such as graphically as a set of nodes 30 connected by their associated linkages 32." EX1006, ¶35. "The network … can be presented graphically by setting a single node as the root of the network … and displaying a set number of linkages 32 radiating from the root node." EX1006, ¶35. Wong also teaches that a "sender can select those in the network … who can receive or view a particular

communication." EX1006, ¶44. This is consistent with the '454 patent's description of "a 'projected' view" as "a subset of the nodes" of the NDSN. EX1001, 16:26-27.

183. Gogic teaches *using geographic locations of a plurality of devices* in determining which users to invite to the ad-hoc communication group. As described with respect to Gogic's Figure 4, "the group is formed on the basis of proximity to a designated location." EX1007, 10:16-18. Gogic also describes including "group membership location criteria such as region or location criteria defining the inclusive boundary of users that are invited to join the group." EX1007, 10:26-29. "[R]epresentative location criteria may include a location centerpoint and an acceptable radius, perimeter locations, servicing base station identifier, as well as other location based identifiers know by those of ordinary skill in the art." EX1007, 10:30-34.

184. As I discuss above, a POSA would have been motivated to incorporate Gogic's teachings of an ad-hoc location-based communication group into Wong's social network communication system to be able to, for example, send updates or alerts to users located in an affected area during an emergency. Thus, in the Wong-Gogic combination, a POSA would have been motivated to select the particular subset of nodes in Wong's social network that are invited to participate

in the ad-hoc location-based communication group based on the geographic locations of the devices used to access the social network, as taught by Gogic.

185. Thus, in my opinion, the Wong-Gogic combination teaches element [1.2].

4. [1.3]: (c) transmitting an invitation to establish a link with the event node server to the devices corresponding to each node in the projection formed in step (b)

186. In my opinion, the Wong-Gogic combination teaches this element.

187. *First*, the combination teaches *transmitting an invitation … to the devices corresponding to each node in the projection formed in step (b)*. Gogic teaches *transmitting an invitation* to join the ad-hoc communication group. "MSC/BS_N 408 as previously directed 418 by CM 404 transmits 420 a broad or indiscriminant or generalized invitation to join a group to all recipient CDs with their invitation acceptance being conditional upon the CD qualifying according to the location criteria also transmitted in the broad indiscriminant invitation." EX1007, 10:45-50. "The CDs 412, 414, 416 receive the broad indiscriminant invitation to join the group with the right to accept the invitation being conditional upon the CD qualifying according to the location criteria also transmitted with the broad indiscriminant invitation in the emergency broadcast channel." EX1007, 10:57-61.

188. Based on these teachings of Gogic, a POSA would have been motivated to likewise transmit an invitation to participate in the ad-hoc location-based communication group to the devices corresponding to the particular subset of nodes in Wong's social network determined to meet the geographic location criteria. Alternatively, as in Gogic, a POSA would have been motivated to transmit a broad invitation to all nodes in the network along with geographic location criteria. The claim language does not require the invitation to be sent *only* to the devices corresponding to the nodes in the projection. *See also* EX1001, 17:43-47 (describing that a "node may be able to discover other nodes by broadcasting a message on the local network.").

189. *Second*, the combination teaches the *invitation* is *to establish a link with the event node server*. In the Wong-Gogic combination, participating in the ad-hoc communication group results in a linkage between the user node and the newly created event node. This is because communication in the Wong system occurs between nodes. EX1006, ¶44. Thus, a POSA would have understood that an invitation to join the ad-hoc communication group constitutes an invitation to link to the event node and its associated server (*the event node server*). I provide further details below in my discussion of element [1.5] (regarding the combination's teachings of *establishing a link*).

190. Thus, in my opinion, the Wong-Gogic combination teaches element [1.3].

5. [1.4]: (d) receiving a response from at least one of the devices from step (c) accepting the invitation to establish a link with the event node server

191. In my opinion, the Wong-Gogic combination teaches this element.

192. Gogic teaches *receiving a response from at least one of the devices … accepting the invitation* to join the ad-hoc communication group. "FIG. 4 illustrates CD_1 412 as qualifying to join the group and accordingly accepting 440 the invitation which is relayed back to dispatcher 400 through CM 404." EX1007, 10:67-11:2; *see* EX1007, 11:4-7 (CD_2 also accepting the invitation).

193. Based on these teaching of Gogic, a POSA would have understood the nodes in Wong's social network that receive an invitation and also qualify to join the group would likewise accept the invitation.

194. Thus, in my opinion, the Wong-Gogic combination teaches element [1.4].

6. [1.5]: (e) establishing a link with each device accepting the invitation

195. In my opinion, the Wong-Gogic combination teaches this element.

196. As I discuss above, in the Wong-Gogic combination, participating in the ad-hoc communication group in Wong's system results in a linkage between the user node and the newly created event node and its associated server. This is

because communication in the Wong system occurs between nodes. EX1006, ¶44. In Gogic, communication device(s) (CD) are added to the ad-hoc communication group in response to accepting the invitation. EX1007, 11:3-9; EX1007, 6:3-5 ("The term 'group' or 'net' denotes a collection of communication device users authorized to communicate with each other."). Thus, a POSA would have understood that a user device associated with the user node accepting the invitation would be added to the ad-hoc communication group and, thus, linked to the server associated with the event node in order to participate in the ad-hoc communication group. Further, a POSA would have understood that, to the extent a particular user's device was not previously linked to the particular server associated with the event node to which it has been invited, it would have been obvious that a new link would be established in order to facilitate participation in the ad-hoc communication group.

197. Thus, in my opinion, the Wong-Gogic combination teaches element [1.5].

C. Claim 2

198. Claim 2 depends from claim 1 and further recites: "*wherein the event node is created in response to identification of the situation by a situation authority*." In my opinion, Gogic teaches this claim element.

199. In Gogic, the emergency situation is identified by a dispatcher. EX1007, 10:18-21. "Only authorized personnel are allowed to have access to Dispatcher 226, … e.g., Police, Emergency Crews, Fire Dept. personnel, etc." EX1007, 10:1-9. The '454 patent includes "government agencies (e.g., local fire departments…)" as an example of a situation authority. EX1001, 4:10-17.

200. Thus, in my opinion, the Wong-Gogic combination teaches claim 2.

D. Claim 3

201. Claim 3 depends from claim 1 and further recites: "*(f) providing the projection formed in step (b) to each device corresponding to the nodes in the projection that has established a link with the event node server*." In my opinion, the Wong-Gogic combination teaches this claim.

202. As discussed for element [1.2], Wong teaches that the network 24 can be viewed in many ways, such as, for example, setting a single node as the root and displaying a set number of linkages radiating therefrom. EX1006, ¶35. Wong also teaches that "[a]nother part of the network … can be viewed by resetting another node as the root." EX1006, ¶35. Wong thus teaches that the *projection* can be viewed from different user perspectives.

203. As I discuss above, in the Wong-Gogic combination, an ad-hoc location-based communication group is implemented in Wong's social network. The users in the ad-hoc communication group correspond to the *nodes in the*

projection that ha[ve] established a link with the event node server. As taught in Gogic, members of the group are authorized to transmit communications to other members of the group. *E.g.*, EX1007, 2:54-3:5. It would have been obvious to *provide to* each user's device in the ad-hoc location-based communication group the view of direct and indirect connections with other users included in this group, i.e., the *projection* from that user's perspective, to facilitate the communication, based on Wong's teaching of viewing connections with other nodes. EX1006, ¶34. In particular, Wong describes that a user "with an active node can view the connection, one or a series of defined linkages of nodes, between its own node and any other node in the network." EX1006, ¶34; *see* FIG. 2.

204. Alternatively, users in the ad-hoc communication group may wish to view other nodes in the network in order to confirm group membership. *See, e.g.*, EX1007, 2:12-15 ("There is a need for emergency response teams to establish communication with any and all users in an area affected by a large scale natural disaster."); 6:3-5 (defining "group" as "a collection of communication device users authorized to communicate with each other"). Such a user in the ad-hoc communication group (*device … that has established a link*) that views the group (*projection*) is *provided the projection*.

205. Thus, in my opinion, the Wong-Gogic combination teaches claim 3.

E. Claim 4

206. Claim 4 depends from claim 1 and further recites: "*(f) providing a first set of information about the situation to each device corresponding to the nodes in the projection that has established a link with the event node server*." In my opinion, the Wong-Gogic combination teaches this claim.

207. In Wong, communication between nodes includes sending alerts. EX1006, ¶44. Once the user nodes are linked to the event node, as described above for claim 1, a POSA would have understood that alerts are communicated from the event node to the user nodes, and that these alerts are *a first set of information about the situation*. Gogic also teaches using the ad-hoc communication group to give users in an affected area emergency assistance information that is specific to the area where they are located. EX1007, 2:12-17. Thus, in view of this teaching of Gogic, it would have been obvious that the alert of Wong could include such emergency assistance information, which is *about the situation* (i.e., about the emergency).

208. Thus, in my opinion, the Wong-Gogic combination teaches claim 4.

F. Claim 6

209. Claim 6 depends from claim 4 and further recites: *"(f) receiving additional sets of information about the situation from at least one of the devices corresponding to the nodes in the projection that have established a link with the*

event node server;" and "*(g) distributing updated information about the situation based on the additional sets of information to the devices corresponding to the nodes in the projection that have established a link with the event node server*." In my opinion, Gogic teaches the elements of this claim.

210. Gogic discloses that after a group is formed, a user may be granted permission to transmit information to the other group members. For example, "[o]nce the ad-hoc group has been formed …, *a specific* CD_N *may request 502 the floor* according to a floor request process." EX1007, 11:22-27; *see also* EX1007, 11:57-67. Once the floor is granted to a specific CD_N, the CD_N has permission to transmit to others in the group. EX1007, 13:15-34 (claim 1).

211. A POSA would have recognized that the information transmitted within the group is "*updated information about the situation*" because the group has specifically been formed for communication related to the situation. *See, e.g.*, EX1007, 10:16-22 ("FIG. 4 illustrates the formation of an ad-hoc group in response to an emergency notification, wherein the group is formed on the basis of proximity to a designated location. A dispatcher 400 identifies the occurrence or presence of an event or condition wherein communications between proximately located users could be beneficial.").

212. Further, because a user may transmit information to other group members, Gogic teaches the "*distributing*" step. And because users receive the

transmissions from the group member holding the floor (e.g., as Gogic describes, "monitoring of situational or conditional data," EX1007, 12:1-6), Gogic teaches the "*receiving*" step.

213. Thus, in my opinion, the Wong-Gogic combination teaches claim 6.

G. Claim 8

214. Claim 8 recites: "*wherein the device is a personal information aggregator*." In my opinion, Wong teaches this element.

215. The '454 patent describes a "personal information aggregator" as "provid[ing] a user with the ability to store, organize and control personal information." EX1001, 7:65-67. Wong teaches such a "personal information aggregator." Wong states, "[e]ach active node can contain information pertaining to the living individual person that it represents," including for example genetic information. EX1006, ¶19. "The user can edit the user's own node including editing the content of the user's profile, … add or change privacy settings, … add genetic information." EX1006, ¶20. Users access this profile with, for example, "laptops, desktops, handheld, personal digital assistants, [or] mobile telephones." EX1006, ¶17.

216. Thus, in my opinion, the Wong-Gogic combination teaches claim 8.

H. Claim 9

217. Claim 9 recites: "*wherein the situation is a weather phenomenon*." In my opinion, Gogic teaches this element.

218. One example of an emergency situation for which Gogic describes its ad-hoc communication group would be used is hurricanes. EX1007, 1:27, 2:12-17, 2:20-24. Thus, Gogic discloses a situation that is a weather phenomenon.

219. Thus, in my opinion, the Wong-Gogic combination teaches claim 9.

I. Independent Claim 10

1. [10.P] A method of creating a projection of a situational network, the method comprising

220. To the extent the preamble is determined to be limiting, it is my opinion that the Wang-Gogic combination teaches the preamble for the reasons I discuss above for element [1.P].

2. [10.1] (a) receiving, by a first device corresponding to a node in a multi-dimensional personal information network, an invitation to establish a link with an event node server in response to the first device being included in a projection of nodes of the multi-dimensional personal information network

221. In my opinion, the Wong-Gogic combination teaches element [10.1] for the reasons I discuss above for elements [1.1], [1.2], and [1.3]. In particular, as discussed for element [1.3], Gogic teaches the user devices *receive* the invitation to join the group. EX1007, 10:57-61.

3. [10.2] (b) transmitting a response accepting the invitation to establish a link with the event node server;

222. In my opinion, the Wong-Gogic combination teaches element [10.2] for the reasons I discuss above for element [1.4]. In particular, as discussed for element [1.4], Gogic teaches the user device accepting the invitation. EX1007, 10:67-11:7.

4. [10.3] (c) establishing a link with the event node server; and

223. In my opinion, the Wong-Gogic combination teaches element [10.3] for the reasons I discuss above for element [1.5].

5. [10.4] (d) receiving information about the situation from the event node server

224. In my opinion, the Wong-Gogic combination teaches element [10.4] for the reasons I discuss above for claim 4. As discussed for claim 4, Wong discloses sending alerts (i.e., *information*) and Gogic teaches providing emergency assistance information (i.e., *information about the situation*) to users. Thus, the Wong-Gogic combination correspondingly teaches users *receiving* those messages.

J. Claim 11

225. Claim 11 depends from claim 10 and further recites: "*wherein the invitation is received based on a geographic proximity of the first device with other devices in the multi-dimensional personal information network*." In my opinion, Gogic teaches this element.

226. Gogic discloses that "the group is formed on the basis of proximity to a designated location." EX1007, 10:16-18. I provide further details above in my discussion of element [1.2]. A POSA would have understood that users within a designated proximity of a designation location would also have a geographic proximity relative to each other.

227. Thus, in my opinion, the Wong-Gogic combination teaches claim 11.

K. Claim 12

228. Claim 12 depends from claim 10 and further recites: "*wherein the event node server corresponds to an event node of the situational network created in response to identification of the situation by a situation authority*." In my opinion, the Wong-Gogic combination teaches claim 12 for the reasons I discuss above for element [1.1] and claim 2.

L. Claim 13

229. Claim 13 depends from claim 10 and further recites: "*(e) receiving the projection of the nodes of the situational network from step (a) from the event node server*." In my opinion, the Wong-Gogic combination teaches this claim.

230. As I discuss above for claim 3, it would have been obvious based on the teachings of Wong and Gogic, to provide the projection of nodes to each of the nodes participating in the ad-hoc location-based communication group in order to facilitate the communication. EX1006, ¶¶34-35. A POSA would have understood

this projection to be *receiv[ed] … from the event node server*, because in the Wong-Gogic combination, the social network is maintained by the server, which includes databases in which all data related to the network (including nodes, linkages, etc.) are stored. EX1006, ¶¶17, 36.

231. Thus, in my opinion, the Wong-Gogic combination teaches claim 13.

M. Claim 14

232. Claim 14 depends from claim 13 and further recites: "*(f) inviting at least one other device included in the projection to establish a link with the first device;*" "*(g) connecting to the at least one other device from step (e)*[4] *accepting the invitation;*" and "*(h) sharing information related to the situation with the at least one other device*." In my opinion, the Wong-Gogic combination teaches the elements of this claim.

233. Wong discloses allowing a user to invite another user to join the social network. EX1006, ¶19. Wong also discloses that a user in one social network (the user associated with *the first device*) invites a user from another social network (the user associated with *at least one other device*) to join and merge the two networks into one. EX1006, ¶43. A POSA would have understood that this invitation and

[4] As above, I understand this to be a typographical error, referring to "step (f)" of claim 14, in which the "at least one other device" is first recited.

subsequent merger of networks results in *establish[ing] a link* connecting the first device and the at least one other device. Wong further teaches communicating (i.e., *sharing information*) among users in the social network. EX1006, ¶¶19, 44. A POSA would have understood that in the Wong-Gogic combination, in which an ad-hoc location-based communication network is formed in response to an emergency situation, that such shared information would be *related to the situation*.

234. I provide further details regarding steps (f) and (g) in my discussion above of claim elements [1.3], [1.4], [10.1], and [10.2]. I provide further details regarding step (h) in my discussion above of claim 4.

235. Thus, in my opinion, the Wong-Gogic combination teaches claim 14.

N. Claim 15

236. Claim 15 depends from claim 14 and further recites: "*wherein the connections established in step (g) have an order of separation of one*." In my opinion, the Wong-Gogic combination teaches this claim.

237. Wong teaches *an order of separation of one* because Wong discloses that the connection between nodes is formed of "*one* or a series of *defined linkages of nodes*." EX1006, ¶34.

238. Thus, in my opinion, the Wong-Gogic combination teaches claim 15.

O. Claim 16

239. Claim 16 depends from claim 14 and further recites: "*wherein the connections established in step (g) are multi-dimensional*." In my opinion, the Wong-Gogic combination teaches this claim.

240. Wong teaches the *connections … are multi-dimensional*. EX1006, ¶24 ("Nodes can be linked by *more than one* linkage type, representing the multiple types of relationships between the entities represented by the nodes."); *see also* EX1006, ¶33 ("The linkage can have one or more defined linkage types representing different relationship types. … The relationship of a node to another node within the same network of living and non-living entities can also be represented by more than one defined linkage type."), FIG. 4 (showing a "matrix of linkage relationships," ¶25). Each linkage type corresponds to a *dimension* by which the *connections* may be characterized.

241. Thus, in my opinion, the Wong-Gogic combination teaches claim 16.

P. Claim 17

242. Claim 17 depends from claim 16 and further recites: "*wherein at least one of the dimensions corresponds to the situation*." In my opinion, the Wong-Gogic combination teaches this claim.

243. As I discuss above for elements [1.P] and [1.2], in the Wong-Gogic combination, users are included in the ad-hoc location-based communication group

based on their geographic location in an affected area during an emergency. Thus, the *connections* include a *dimension* of geographic location, which corresponds to the emergency (*the situation*).

244. Thus, in my opinion, the Wong-Gogic combination teaches claim 17.

Q. Claim 18

245. Claim 18 depends from claim 17 and further recites: "*wherein the dimension corresponding to the situation includes an affinity greater than affinity included along the other dimensions*." In my opinion, the Wong-Gogic combination teaches this claim.

246. The '454 patent defines "affinity" as "trust or alignment," and describes that the affinity attribute may be used to determine which nodes are included in the projection. EX1001, 15:52-53, 16:48-54. As discussed for claim 17, in the Wong-Gogic combination the *dimension* of geographic location corresponding to the emergency (*the situation*) is the primary dimension based on which users are included in the ad-hoc location-based communication group. Because this decision is based on the geographic location *dimension*, a POSA would have understood this dimension may have a greater affinity, i.e., greater alignment, than any other types of relationships (*dimensions*) between the users.

247. Thus, in my opinion, the Wong-Gogic combination teaches claim 18.

R. Independent Claim 20

248. Claim 20 recites a "*system for creating a projection of a situational network*." The system of claim 20 includes an *event node server* configured to perform functions similar to the steps of method claim 1. The system of claim 20 further includes a *plurality of devices* configured to perform functions similar to the steps of method claim 10. In my opinion, the Wong-Gogic combination teaches this claim.

249. As I discuss above for claim 1, Wong discloses a system, including computer terminals 14 providing users 10 access to computer network 12. EX1006, ¶17. Further, "[s]erver 20 has the hardware and software required to operate an internet-accessible social network." EX1006, ¶17. As also discussed, Wong's server 20 teaches, or at least suggests, *an event node server*. *See* claim [1]. As I discuss above for claim elements [1.1], [1.2], [1.3], [1.4.], and [1.5], the Wong-Gogic combination teaches the functionalities of the event node server recited in claim 20. Additionally, in claim 20, the *event node server* is *corresponding to a situation authority*. As I discuss above for claim 2, the Wong-Gogic combination teaches that the event node connecting the ad-hoc communication group is created in response to a dispatcher (i.e., *a situation authority*) identifying the emergency situation (i.e., *a situation*). It would have been obvious that the dispatcher, associated for example with an emergency crew or fire department, could be part

of Wong's social network. For instance, Wong teaches that nodes can represent objects, which in turn can be, for example, a group, organization, or business. EX1006, ¶¶21-22. Wong's server (i.e., *event node server*), thus, *correspond[s] to*, or relates to, the dispatcher (i.e., *situation authority*) because the node associated with the dispatcher is part of the social network maintained by the server.

250. Wong teaches that users may access the social network over any device capable of communicating over a network, such as, for example "laptops, desktops, handheld, personal digital assistants, [or] mobile telephones." EX1006, ¶17. As I discuss above for claim elements [10.1], [10.2], and [10.4], the Wong-Gogic combination also teaches the functionalities of the user devices recited in claim 20.

251. Thus, in my opinion, the Wong-Gogic combination teaches the system of claim 20.

XIV. CONCLUSION

252. In signing this declaration, I recognize that the declaration will be filed as evidence in an *inter partes* review before the Patent Trial and Appeal Board of the United States Patent and Trademark Office. I also recognize that I may be subject to cross-examination in the case and that cross-examination will take place within the United States. If cross-examination is required, I will appear for cross-examination within the United States during the time allotted.

253. I hereby declare that all statements made herein of my own knowledge are true and that all statements made on information and belief are believed to be true, and further that these statements were made with the knowledge that willful false statements and the like so made are punishable by fine or imprisonment, or both, under Section 1001 of Title 18 of the United States Code.

Executed on this 26th day of February 2024, in Westmount, Quebec.

Jeremy Cooperstock, Ph.D.