US 20100131858A1

(19) United States

(12) Patent Application Publication

Schultz et al.

(10) Pub. No.: US 2010/0131858 A1

(43) Pub. Date: May 27, 2010

(54) **USER INTERFACE**

(75) Inventors: **Paul T. Schultz**, Colorado Springs, CO (US); **Robert A. Sartini**, Colorado Springs, CO (US); **Martin W. McKee**, Herndon, VA (US)

Correspondence Address:
VERIZON
PATENT MANAGEMENT GROUP
1320 North Court House Road, 9th Floor
ARLINGTON, VA 22201-2909 (US)

(73) Assignee: **VERIZON BUSINESS NETWORK SERVICES INC.**, Ashburn, VA (US)

(21) Appl. No.: **12/275,319**

(22) Filed: **Nov. 21, 2008**

Publication Classification

(51) **Int. Cl.**
G06F 3/00 (2006.01)
G06F 17/30 (2006.01)
G06F 12/00 (2006.01)

(52) **U.S. Cl.** **715/751**; 707/E17.044; 709/227

(57) **ABSTRACT**

A device may include a user interface configured to provide audio, video or haptic output in response to received communications. The device may also include logic to identify information associated with an availability status of a user of the device and provide an audio, video or haptic output via the user interface based on the information associated with the availability status of the user of the device.

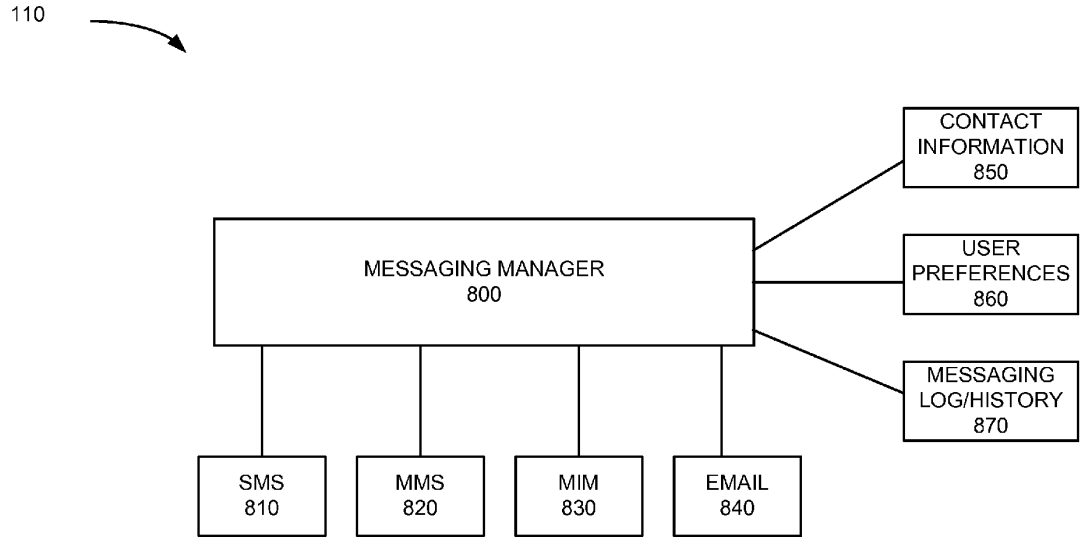

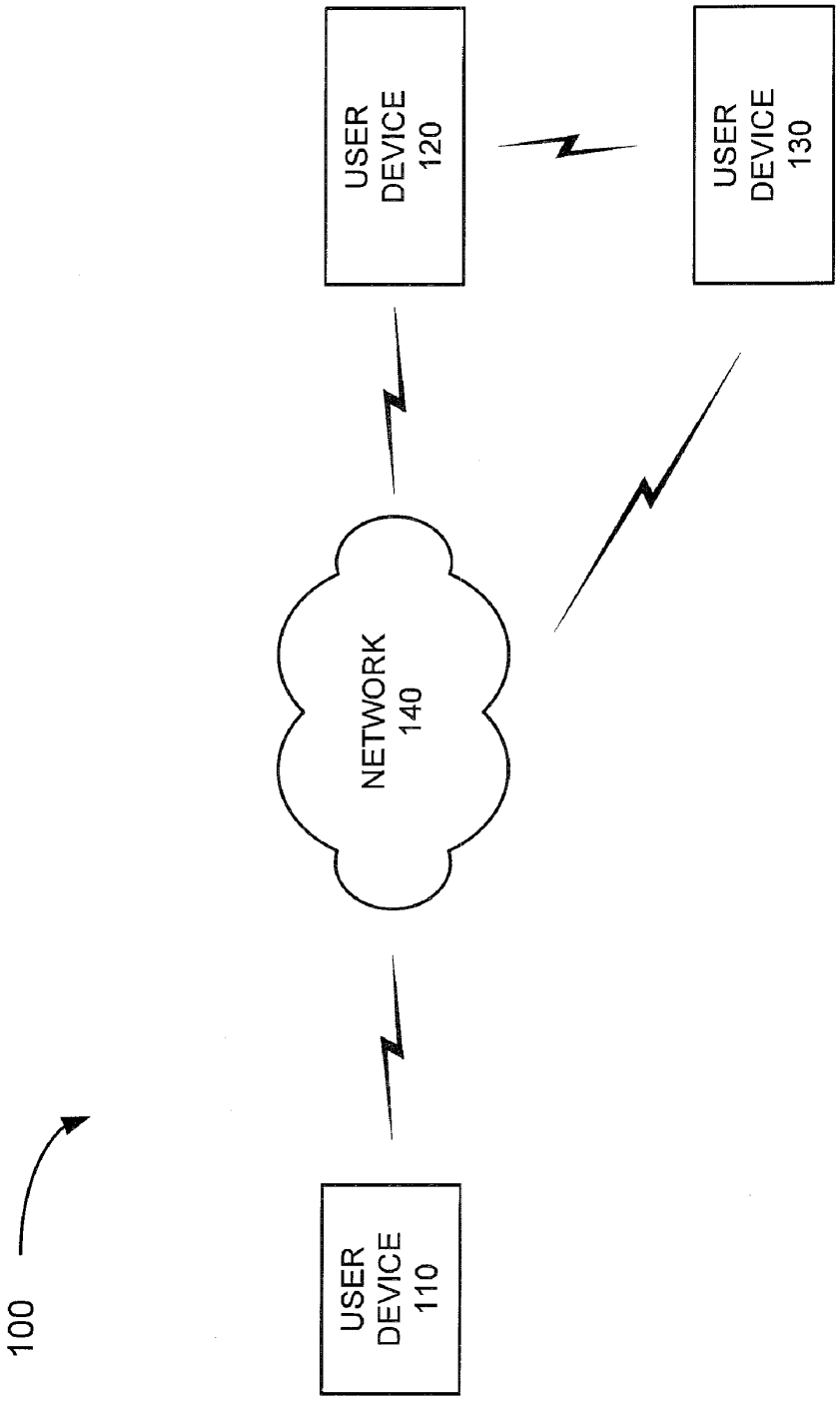
100
USER DEVICE 110
NETWORK 140
USER DEVICE 120
USER DEVICE 130

FIG. 1

FIG. 2

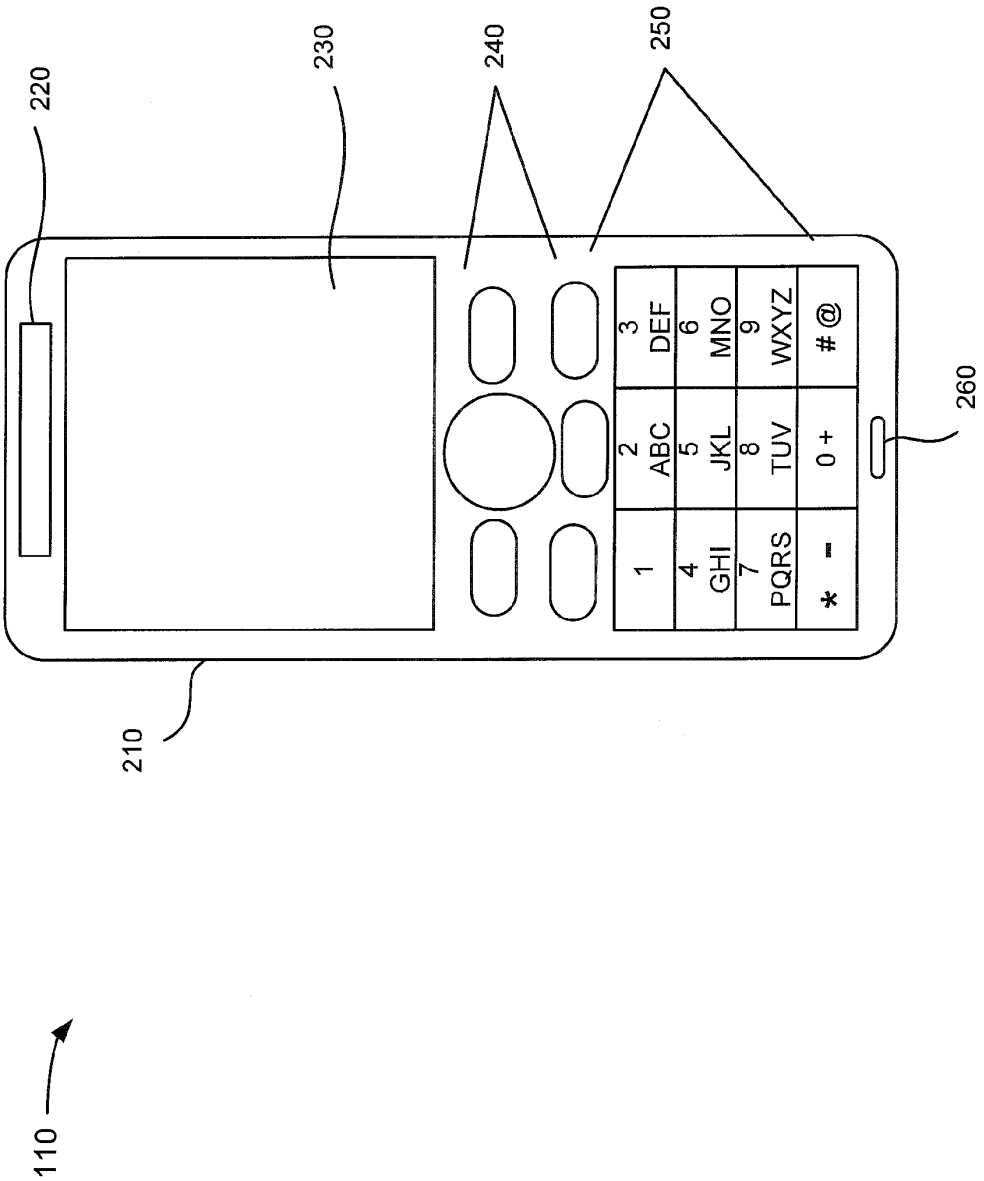
220
230
240
250
1
2 ABC
3 DEF
4 GHI
5 JKL
6 MNO
7 PQRS
8 TUV
9 WXYZ
* -
0 +
@
260
210
110

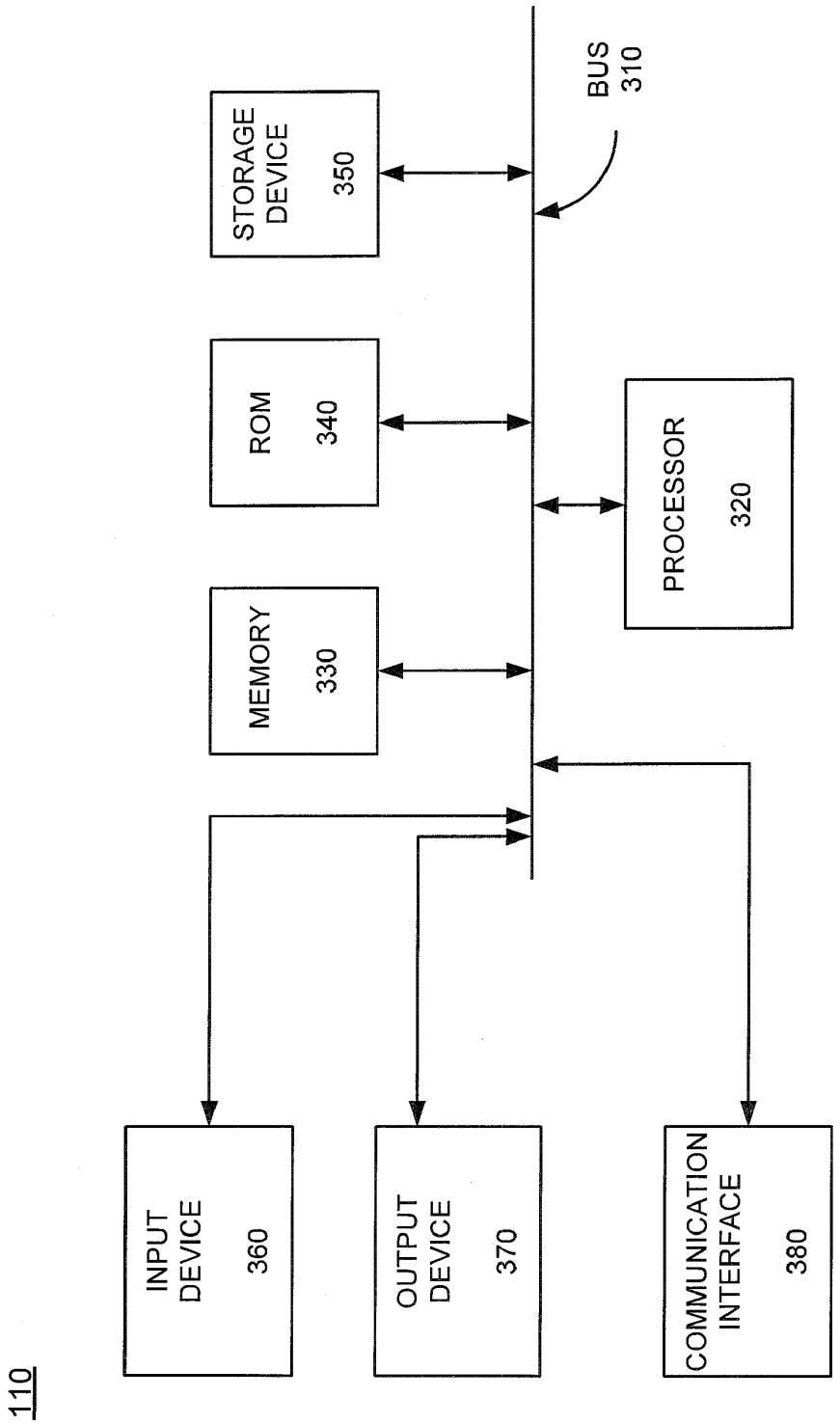
110
INPUT DEVICE 360
OUTPUT DEVICE 370
COMMUNICATION INTERFACE 380
MEMORY 330
ROM 340
STORAGE DEVICE 350
PROCESSOR 320
BUS 310

FIG. 3

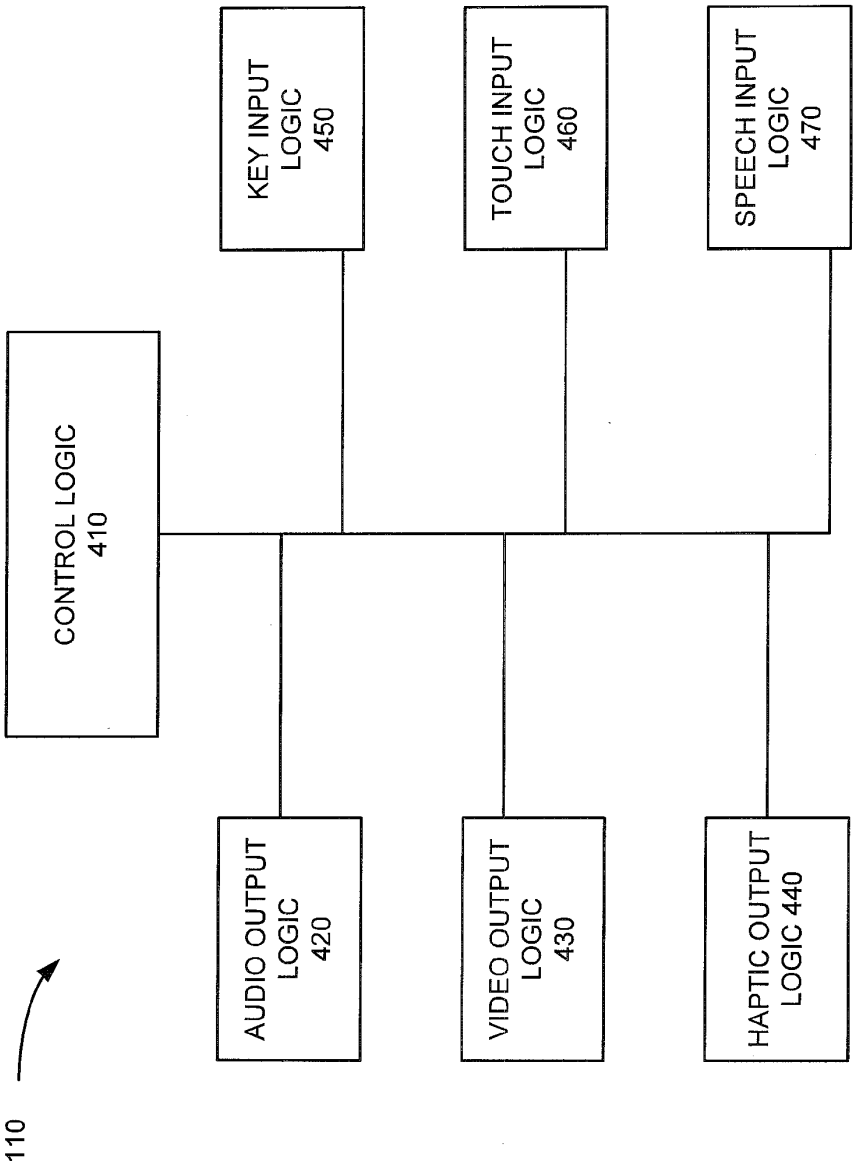
110
CONTROL LOGIC
410
KEY INPUT
LOGIC
450
TOUCH INPUT
LOGIC
460
SPEECH INPUT
LOGIC
470
AUDIO OUTPUT
LOGIC
420
VIDEO OUTPUT
LOGIC
430
HAPTIC OUTPUT
LOGIC 440

FIG. 4

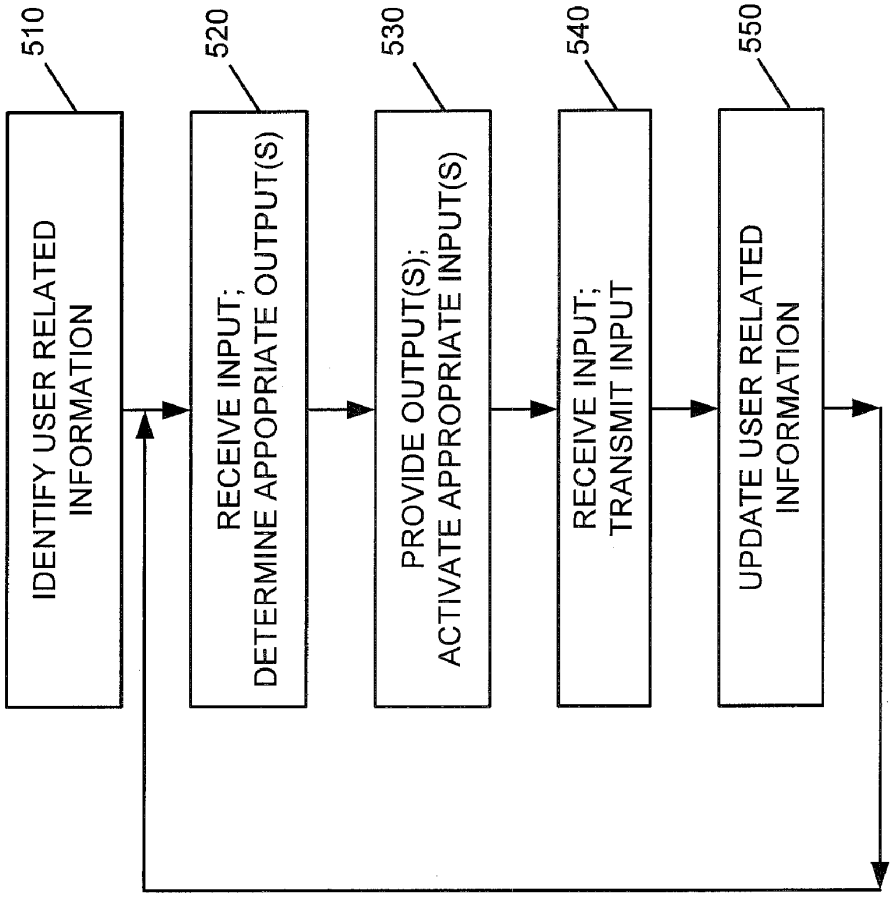
510
IDENTIFY USER RELATED INFORMATION
520
RECEIVE INPUT; DETERMINE APPOPRIATE OUTPUT(S)
530
PROVIDE OUTPUT(S); ACTIVATE APPROPRIATE INPUT(S)
540
RECEIVE INPUT; TRANSMIT INPUT
550
UPDATE USER RELATED INFORMATION

FIG. 5

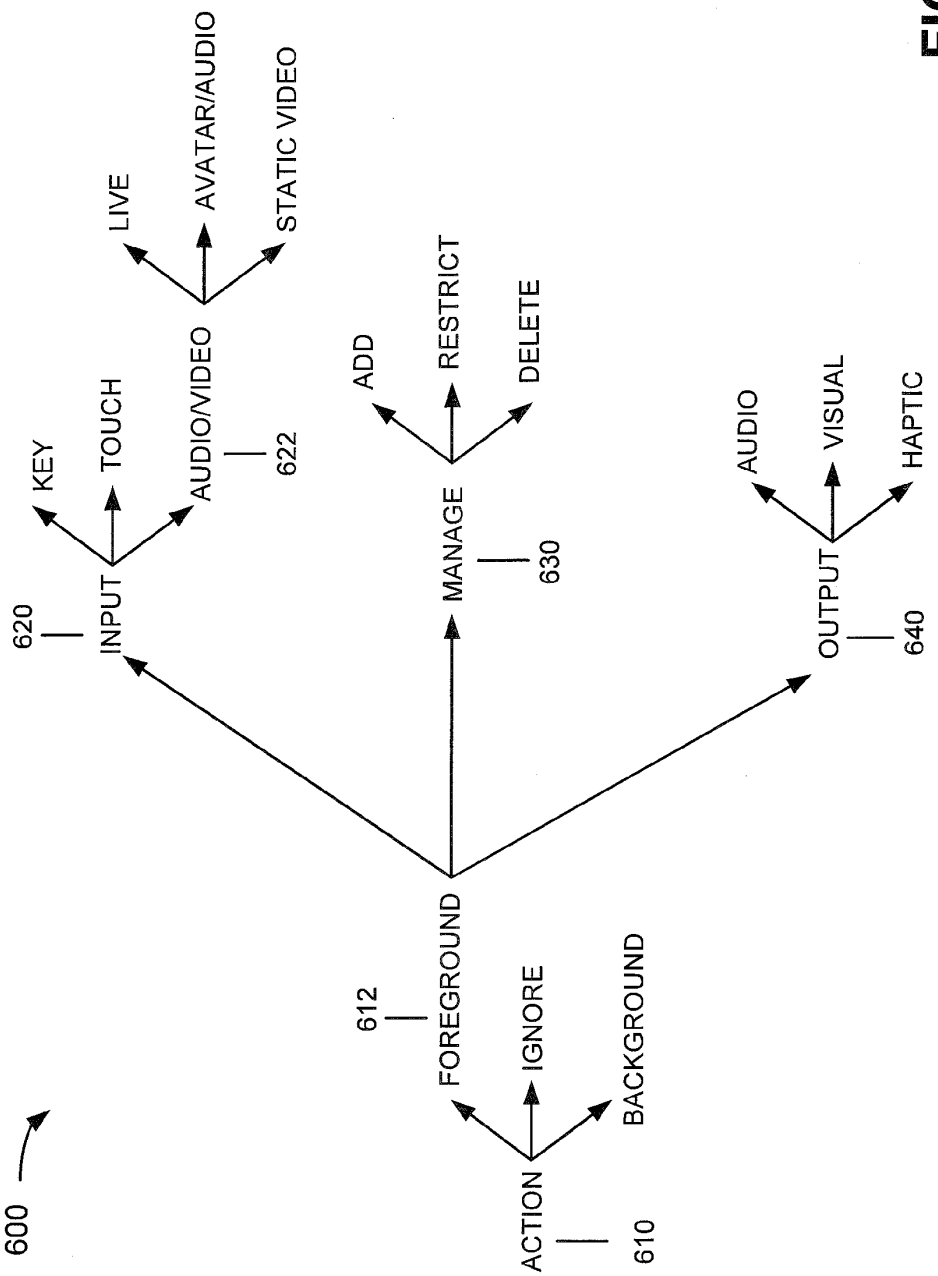
600
ACTION
610
FOREGROUND
612
IGNORE
BACKGROUND
INPUT
620
KEY
TOUCH
AUDIO/VIDEO
622
LIVE
AVATAR/AUDIO
STATIC VIDEO
MANAGE
630
ADD
RESTRICT
DELETE
OUTPUT
640
AUDIO
VISUAL
HAPTIC

FIG. 6

700

705	TOP	MIDDLE	BOTTOM	DISPLAY LOCATIONS, TOUCH NAVIGATION, AUDIO PANNING LOCATION
710	HIGH	MEDIUM	LOW	DISPLAY BRIGHTNESS, HAPTIC VIBRATION INTENSITY, AUDIO FREQUENCY/VOLUME
715	LEFT	MIDDLE	RIGHT	DISPLAY LOCATIONS, TOUCH NAVIGATION, AUDIO PANNING LOCATIONS
720	FAST	MEDIUM	SLOW	DISPLAY MOVEMENT, HAPTIC VIBRATION SPEED, AUDIO PLAYACK SPEED
725	FRONT	MIDDLE	BACK	DISPLAY LOCATIONS, HAPTIC LOCATIONS, AUDIO PANNING LOCATIONS
730	LIGHT	MEDIUM	DARK	DISPLAY CHARACTERISTICS
735	HOT	WARM	COLD	HAPTIC FEEDBACK
740	AUDIO	VIDEO	HAPTIC	DEVICE OUTPUT
745	EARCON	ICON	HAPTICON	DEVICE OUTPUT REPRESENTATION
750	YES	MAYBE	NO	DEVICE OUTPUT
755	SHARP	MEDIUM	DULL	AUDIO, VIDEO OR HAPTIC FEEDBACK
760	I	IV	V	AUDIO ICON STRUCTURE
765	RED	YELLOW	GREEN	VISUAL FEEDBACK, VISUAL TAGGING OF CONTENT

FIG. 7

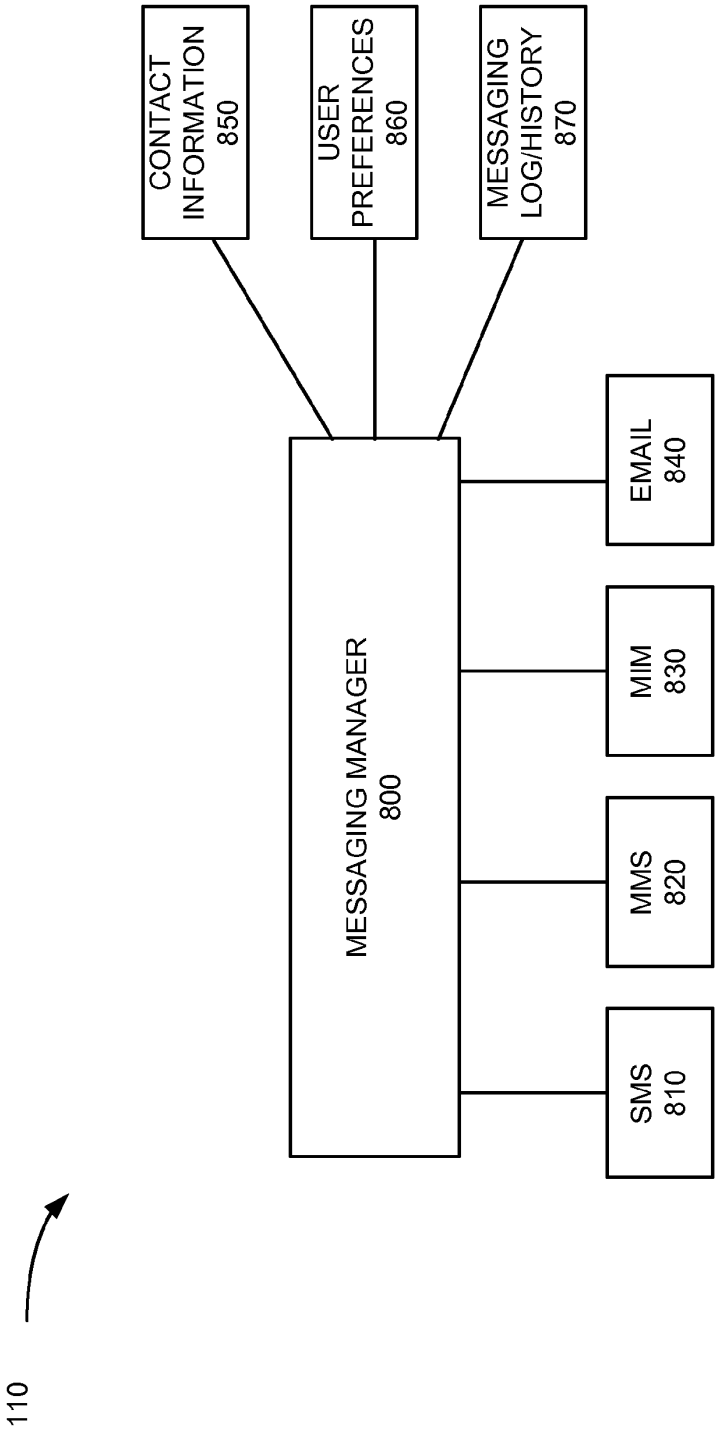
110
CONTACT INFORMATION 850
USER PREFERENCES 860
MESSAGING LOG/HISTORY 870
MESSAGING MANAGER 800
SMS 810
MMS 820
MIM 830
EMAIL 840

FIG. 8

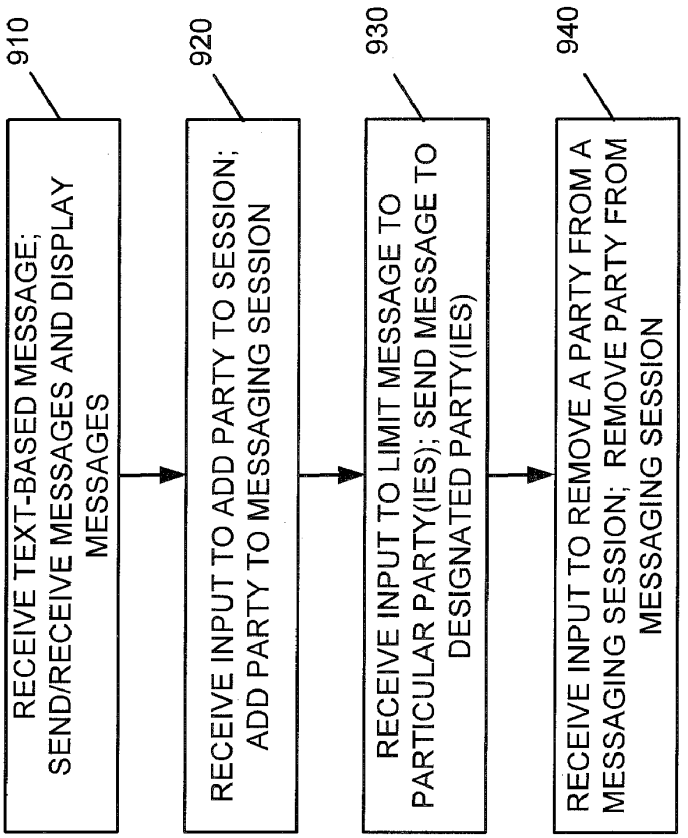
910
RECEIVE TEXT-BASED MESSAGE; SEND/RECEIVE MESSAGES AND DISPLAY MESSAGES
920
RECEIVE INPUT TO ADD PARTY TO SESSION; ADD PARTY TO MESSAGING SESSION
930
RECEIVE INPUT TO LIMIT MESSAGE TO PARTICULAR PARTY(IES); SEND MESSAGE TO DESIGNATED PARTY(IES)
940
RECEIVE INPUT TO REMOVE A PARTY FROM A MESSAGING SESSION; REMOVE PARTY FROM MESSAGING SESSION

FIG. 9

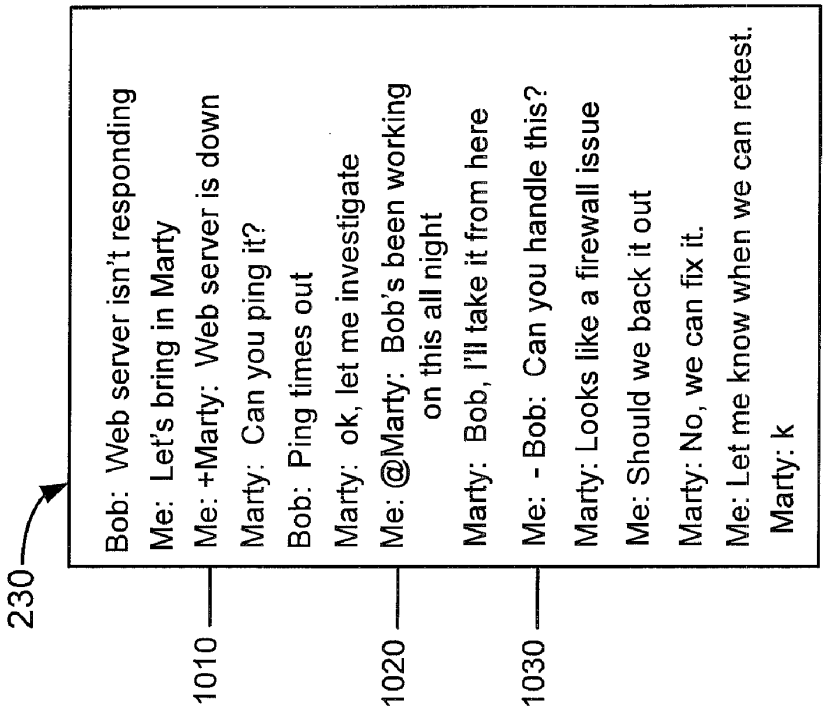
230
1010
1020
1030
Bob: Web server isn't responding
Me: Let's bring in Marty
Me: +Marty: Web server is down
Marty: Can you ping it?
Bob: Ping times out
Marty: ok, let me investigate
Me: @Marty: Bob's been working on this all night
Marty: Bob, I'll take it from here
Me: - Bob: Can you handle this?
Marty: Looks like a firewall issue
Me: Should we back it out
Marty: No, we can fix it.
Me: Let me know when we can retest.
Marty: k

FIG. 10A

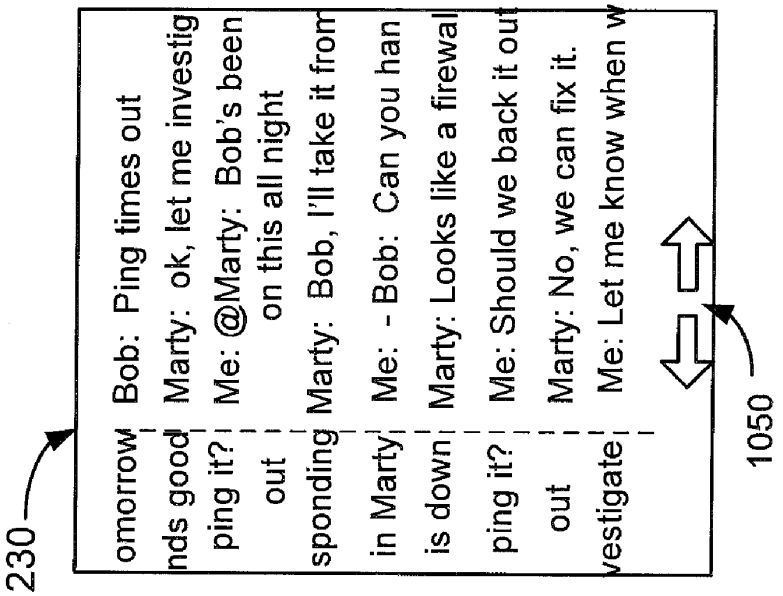
230
omorrow
nds good
ping it?
out
sponding
in Marty
is down
ping it?
out
vestigate
Bob: Ping times out
Marty: ok, let me investig
Me: @Marty: Bob's been
on this all night
Marty: Bob, I'll take it from
Me: - Bob: Can you han
Marty: Looks like a firewal
Me: Should we back it out
Marty: No, we can fix it.
Me: Let me know when w
1050

FIG. 10B

USER INTERFACE

BACKGROUND INFORMATION

[0001] Common devices, such as mobile phones, personal digital assistants (PDAs), television remote controls and game controllers, have become increasingly complex. As a result, human/machine interfaces that allow users to interact with these devices have also become more complex. The complexity of the human/machine interface often leads to problems, such as user frustration and errors with respect to performing various functions, as well as not being able to utilize these devices to their fullest capabilities.

BRIEF DESCRIPTION OF THE DRAWINGS

[0002] FIG. **1** illustrates an exemplary network in which systems and methods described herein may be implemented;

[0003] FIG. **2** is a diagram of an exemplary user device of FIG. **1**;

[0004] FIG. **3** is a functional diagram of components implemented in the device of FIG. **2**;

[0005] FIG. **4** is a functional diagram illustrating exemplary logic components implemented in a user device of FIG. **1**;

[0006] FIG. **5** is a flow diagram illustrating exemplary processing associated with managing the user interface of a user device of FIG. **1**;

[0007] FIG. **6** is a diagram of an exemplary processing tree implemented by logic components illustrated in FIG. **4**;

[0008] FIG. **7** is a table illustrating variations associated with providing audio, video and haptic input/output mechanisms via a user interface;

[0009] FIG. **8** is a diagram of exemplary functional components implemented in a user device of FIG. **1**;

[0010] FIG. **9** is a flow diagram illustrating exemplary processing associated with managing a communication session; and

[0011] FIGS. **10**A and **10**B illustrate exemplary displays provided by a user device during a communication session.

DETAILED DESCRIPTION OF PREFERRED EMBODIMENTS

[0012] The following detailed description refers to the accompanying drawings. The same reference numbers in different drawings may identify the same or similar elements. Also, the following detailed description does not limit the embodiments disclosed herein.

[0013] Implementations described herein relate to a device that includes a user interface that leverages audio, visual and/or haptic/touch input and/or output mechanisms to provide a rich, user-friendly interface. In some implementations, the user interface automatically provides one or more of audio, video and/or haptic output and allows the user to provide one or more inputs based on various factors, such as the particular operating conditions or scenarios in which the device is currently operating. In other implementations, logic associated with managing one or more messaging programs provides a simplified interface for performing various functions to enhance the user's experience with respect to communicating with other devices.

[0014] In some instances, possible outputs and inputs of the user interface are organized in groups of N (e.g., three) and M (e.g., three), respectively. To provide outputs (e.g., show information on a display screen) in connection with a device event (e.g., the reception of an incoming call), the user interface may provide one or more outputs in the group that is associated with and appropriate for that event. Similarly, to accept inputs for a particular device action (e.g., make a call or send a response), the user interface may enable one or more inputs in the group associated with and appropriate for the action. By providing outputs and/or accepting inputs that are in groups of N and M, respectively, the user interface may reduce user cognitive load and simplify use of the device.

[0015] FIG. **1** is a block diagram of an exemplary network **100** in which systems and methods described herein may be implemented. Network **100** may include user device **110**, user device **120**, user device **130** and network **140**. User devices **110-130** may connect to network **140** and/or each other via wired, wireless or optical communication mechanisms.

[0016] Each of user devices **110-130** may include a cellular radiotelephone, personal digital assistant (PDA), pager, or similar communications device with data communications and/or data processing capabilities. For example, user devices **110-130** may each include a cellular telephone, PDA, web-based appliance or pager that includes a Web browser or other application providing Internet/Intranet access, messaging application programs, such as text messaging, multi-media messaging, instant messaging, e-mail, etc., an organizer application program, a calendar application program, video application and/or a global positioning system (GPS) receiver. In an alternative implementation, one or more of user devices **110-130** may include a personal computer (PC), laptop computer, palmtop receiver, remote control device and/or any other appliance that may include a radiotelephone transceiver and other applications for providing data processing and data communication functionality.

[0017] In another implementation, one or more of user devices **110-130** may include a remote control device that is able to remotely control a television, a stereo, a video cassette recorder (VCR), a digital video disc (DVD) player, a compact disc (CD) player, a video game system, etc. In still another implementation, one or more of user devices **110-130** may include various user equipment, such as a video game system, a television, a VCR, a DVD player, a CD player, etc., that may be controlled by or interact with other ones of user devices **110-130**.

[0018] Network **140** may include one or more wired, wireless and/or optical networks that are capable of receiving and transmitting data, voice and/or video signals, including multimedia signals that include voice, data and video information. For example, network **140** may include one or more public switched telephone networks (PSTNs) or other type of switched network. Network **140** may also include one or more wireless networks and may include a number of transmission towers for receiving wireless signals and forwarding the wireless signals toward the intended destination. Network **140** may further include one or more packet switched networks, such as an Internet protocol (IP) based network, a local area network (LAN), a wide area network (WAN), a personal area network (PAN), an intranet, the Internet, or another type of network that is capable of transmitting data.

[0019] The exemplary configuration illustrated in FIG. **1** is provided for simplicity. It should be understood that a typical network may include more or fewer devices than illustrated in FIG. **1**. For example, other devices that facilitate communications between the various entities illustrated in FIG. **1** may also be included in network **100**. In addition, user devices **110-130** are each shown as separate elements. In other

instances, the functions described as being performed by two or more user devices may be performed by a single user device. For example, in some instances, user device **110** may be a game controller and user device **130** may be a game console, while in other instances, these devices may be integrally formed as a single user device. In other implementations, the functions described as being performed by one user device may be performed by another user device or by multiple user devices.

[0020] FIG. **2** is a diagram of an exemplary user device **110** in which methods and systems described herein may be implemented. Referring to FIG. **2**, user device **110** may include housing **210**, speaker **220**, display **230**, control buttons **240**, keypad **250**, and microphone **260**. Housing **210** may protect the components of user device **110** from outside elements. Speaker **220** may provide audible information to a user of user device **110**. For example, speaker **220** may provide ringtones, beeping sounds or other sounds to alert the user to an event. Speaker **220** may also output audio information or instructions to a user of user device **110**.

[0021] Display **230** may provide visual information to the user. For example, display **230** may include a liquid crystal display (LCD), a touch screen display or another type of display used to provide information to a user, such as provide information regarding incoming or outgoing telephone calls and/or incoming or outgoing electronic mail (email), instant messages (e.g., mobile instant messages (MIMs), short message service (SMS) messages, multi-media message service (MMS) messages, etc. Display **230** may also display information regarding various applications, such as a calendar application or text message application stored in user device **110**, the current time, video games being played by a user, downloaded content (e.g., news or other information), etc.

[0022] Control buttons **240** may permit the user to interact with user device **110** to cause user device **110** to perform one or more operations, such as send communications (e.g., text messages or multi-media messages), place a telephone call, play various media, etc. For example, control buttons **240** may include a send button, an answer button, a dial button, a hang up button, a clear button, a play button, etc. In an exemplary implementation, control buttons **240** may also include one or more buttons that may be used to launch an application program, such as a messaging program. Further, one of control buttons **240** may be a menu button that permits the user to view options associated with executing various application programs, such as messaging programs, stored in user device **110**. Control buttons **240** may perform different operations depending on the user's context and the application that the user is currently utilizing.

[0023] Keypad **250** may include a telephone keypad. As illustrated, many of the keys on keypad **250** may include numeric values and various letters. For example, the key with the number **2** includes the letters A, B and C. These letters may be selected by a user when inputting text to user device **110**. Other keys on keypad **250** may include symbols, such as the plus symbol (i.e., +), the minus symbol (i.e., –), the at symbol (i.e., @), etc. These symbols may be used to perform various functions, as described in detail below. Microphone **260** may receive audible information from the user. User device **110** may also include haptic capabilities for communicating with the user via tactile feedback.

[0024] FIG. **3** is a diagram illustrating components of user device **10** according to an exemplary implementation. In some implementations, user devices **120** and **130** may be configured in a similar manner. Referring to FIG. **3**, user device **110** may include bus **310**, processor **320**, main memory **330**, read only memory (ROM) **340**, storage device **350**, input device **360**, output device **370**, and communication interface **380**. Bus **310** may include a path that permits communication among the elements of user device **110**. It should be understood that user device **110** may be configured in a number of other ways and may include other or different elements. For example, user device **110** may include one or more power supplies and one or more modulators, demodulators, encoders, decoders, etc., for processing data.

[0025] Processor **320** may include one or more processors, microprocessors, application specific integrated circuits (ASICs), field programmable gate arrays (FPGAs), or other processing logic that may interpret and execute instructions. Memory **330** may include a random access memory (RAM) or another type of dynamic storage device that may store information and instructions for execution by processor **320**. ROM **340** may include a ROM device or another type of static storage device that may store static information and instructions for use by processor **320**. Storage device **350** may include a magnetic and/or optical recording medium and its corresponding drive.

[0026] Input device **360** may include one or more mechanisms that permit a user to input information to user device **10**, such as a control keys **240**, keypad **250**, microphone **260**, a touch screen, such as display **230**, a mouse, a pen, voice recognition and/or biometric mechanisms, etc.

[0027] Output device **370** may include one or more mechanisms that output information to the user, including a display, such as display **230**, a printer, one or more speakers, such as speaker **220**, a vibrating mechanism that provides haptic feedback to a user, etc.

[0028] Communication interface **380** may include any transceiver-like mechanism that enables user device **110** to communicate with other devices and/or systems. For example, communication interface **380** may include mechanisms for communicating via a network, such as a wireless network. In these implementations, communication interface **380** may include one or more radio frequency (RF) transmitters, receivers and/or transceivers and one or more antennas for transmitting and receiving RF data via network **140**. Communication interface **380** may also include an infrared (IR) transmitter and receiver and/or transceiver that enable user device **110** to communicate with other devices via infrared (IR) signals. For example, in one implementation, user device **110** may act as a remote control device and use IR signals to control operation of another device, such as a television, stereo, etc. Communication interface **380** may also include a modem or an Ethernet interface to a LAN or other network for communicating with other devices in network **100**. Alternatively, communication interface **380** may include other mechanisms for communicating via a network, such as network **140**.

[0029] User device **110** may provide a platform for a user to make and receive telephone calls, initiate and receive video sessions, send and receive electronic mail, text messages, IMs, MMS messages, SMS messages, etc., and execute various other applications. User device **110**, as described in detail below, may also perform processing associated with managing the user interface of user device **110**. User device **110** may perform these operations in response to processor **320** executing sequences of instructions contained in a computer-readable medium, such as memory **330**. A computer-readable

medium may be defined as a physical or logical memory device. The software instructions may be read into memory **330** from another computer-readable medium, such as data storage device **350**, or from another device via communication interface **380**. The software instructions contained in memory **330** may cause processor **320** to perform processes that will be described later. Alternatively, hard-wired circuitry may be used in place of or in combination with software instructions to implement processes consistent with the embodiments described herein. Thus, implementations described herein are not limited to any specific combination of hardware circuitry and software.

[0030] FIG. **4** is a functional block diagram of user device **110**, according to an exemplary implementation. The logical blocks illustrated in FIG. **4** may be implemented in software, hardware, or a combination of hardware and software. For example, in one implementation, the logical blocks illustrated in FIG. **3** may be implemented by processor **320** (FIG. **3**) executing software instructions stored in, for example, memory **330**.

[0031] Referring to FIG. **4**, user device **110** may include control logic **410**, audio output logic **420**, video output logic **430**, haptic output logic **440**, key input logic **450**, touch input logic **460** and speech input logic **470**. Control logic **410** may be used to control the machine/user interface of user device **110**. For example, control logic **410** may determine an appropriate output to be provided via user device **110** and/or an appropriate type of input to be accepted by user device **110**.

[0032] In an exemplary implementation, control logic **410** may cause user device **110** to provide one or more outputs in a group of N (e.g., three) potential outputs. For example, control logic **410** may cause user device **110** to provide one or more outputs when user device **110** receives an incoming call. In one implementation, the three potential outputs associated with the incoming call may include generating a ringtone, vibrating user device **110** and displaying a message, such as "incoming call" on display **230**. Control logic **410** may provide one or more such outputs in the group based on any number of factors, such as presence or availability information associated with the user of user device **110**, the mode in which user device **110** is operating, a physical location associated with user device **110**, time of day, one or more applications being run by user device **10**, a calendar of events identifying activities associated with the user of user device **110**, a party or device communicating with user device **110**, or any combination of these and/or other factors, as described in more detail below. By providing one or more outputs included in a group of potential outputs and based on particular factors associated with the user of user device **110**, control logic **410** may reduce the cognitive load on the user and simplify use of user device **110**.

[0033] Audio output logic **420** may control one or more speakers, such as speaker **220** (FIG. **2**), to provide audio output, such as audio output identifying information associated with a message or call. For example, audio output logic **420** may provide a ringtone, music output, voiced output, text-to-speech output or any other audible output. Video output logic **430** may control a display, such as display **230**, which may be an LCD display, a touch screen display, or some other type of display used to provide text, video or multimedia output for viewing by a user of user device **110**. Haptic output logic **440** may include logic to control a vibrating mechanism or some other type of output mechanism that provides tactile feedback to a user of device **110** to indicate, for example, that an incoming call or message has been received.

[0034] Key input logic **450** may include logic to control a keypad, such as keypad **250**, a keyboard, such as an alphanumeric keyboard, control buttons (e.g., control buttons **240**), etc., that allows the user of user device **110** to enter text information, enter control commands, etc. Touch input logic **460** may include logic to control a touch screen of user device **110**, such as display **230**. Speech input logic **470** may include logic to control a speech-to-text converter that converts speech input provided by a user into text and/or commands associated with inputting information and/or controlling user device **110**.

[0035] Control logic **410**, as described in detail below, operates to control the user interface of user device **110** to provide a rich, multimedia user experience. In an exemplary implementation, control logic **410** may control various input/output mechanisms via logic **420-470** based on the various factors, as described in detail below.

[0036] FIG. **5** is a flow diagram illustrating exemplary processing associated with managing the user interface of user device **110**. In this example, assume that user device **110** is a communication device, such as a cellular phone, PDA, etc., capable of performing a multitude of tasks, such as making and receiving telephone calls, video sessions, emails, text messages and/or instant messages, such as mobile instant messages (MIMs), taking pictures and/or videos, surfing the Internet, downloading and executing applications/files, etc. In addition, assume that user device **110** is powered up.

[0037] Processing may begin with control logic **410** identifying various information or conditions associated with the user of user device **110** (act **510**). For example, assume that user device **110** includes a calendar application program. In this case, control logic **410** may access the calendar application program and determine whether the user is currently in a meeting, at home, in his/her car, on travel, etc. For example, assume that the time is 9:20 AM and the user's calendar application program indicates that the user is in a meeting at his/her office from 9:00 AM to 10:00 AM. In this case, control logic **410** determines that the user is currently in a meeting.

[0038] Control logic **410** may also or alternatively determine an availability status of the user of user device **110** in other ways. For example, user device **110** may include a messaging program, such as an IM program, that allows the user to set an availability status indicator that provides information regarding the availability status of the user (e.g., available, busy, out of the office, in a meeting, etc.). In other implementations, control logic **410** may determine a physical location associated with the user via GPS, wireless signal triangulation, or some other mechanism. In each situation, control logic **410** may use the availability information and/or other information associated with the user of user device **110** to tailor the user interface.

[0039] For example, assume that user device **110** receives a communication input, such as a text message, from user device **120** (act **520**). Control logic **410** may identify appropriate output mechanism(s) to alert the user of the received message (act **520**). For example, user device **110** may be able to provide an audio alert (e.g., a beep) via speaker **220** (FIG. **2**), a visual alert (e.g., a video "pop-up") via display **230** and/or a haptic output, such as a vibration, via a vibrator output mechanism of user device **110**.

[0040] In this example, assume that control logic **410** has determined that user is in a meeting at work. In this case, control logic **410** may determine that video output logic **430** and/or haptic output logic **440** should be activated to alert the user of the incoming message. Control logic **410**, however, may determine that audio output logic **420** should not be activated to notify the user of the incoming call, in order to not disturb or disrupt the meeting with an unwanted beeping or ringing.

[0041] As another example, assume that the user is in his/her car when the message from user device **120** is received. In this case, control logic **410** may determine that audio output logic **420** should be activated to alert the user of the incoming call and that video output logic **430** and haptic output logic **440** should not be activated to alert the user of the incoming call. That is, the user will be alerted with a beeping or some other audible output via speaker **220** as to the incoming call. This will avoid the user having to take his/her eyes off the road to view display **230** to determine that a call has been received or avoid the user having to keep user device **110** in his/her pocket in order to feel a vibration.

[0042] In each case, control logic **410** may activate the appropriate output logic. The activated output logic (e.g., one or more of audio, video and haptic output logic **420-440**) may then output the indication of the incoming communication to the user (act **530**).

[0043] Control logic **410** may also determine appropriate input mechanism(s) to activate based on the status/availability information (act **530**). For example, if the user of user device **110** is in a meeting at work, control logic **410** may activate key input logic **450** and/or touch input logic **460** to allow the user to enter a response via, for example, keypad **250** of user device **110** or touch screen display **230**. Control logic **410**, however, may not activate or may deactivate speech input logic **470** since the user would not typically want to disrupt the meeting by carrying on a conversation with another party. In addition, speech input logic **470** may be adversely impacted by other people in the meeting who may be talking (e.g., be unable to perform accurate speech recognition). Therefore, speech input logic **470** may not be activated in this scenario.

[0044] The user of user device **110** may then provide input via, for example, keypad **250** (act **540**). As an example, the user may read the text message and key in a response via keypad **250**. The user may then transmit the response to user device **120** (act **540**).

[0045] The user may continue to interact with the other party at user device **120** via text messages. For each incoming message, control logic **410** may control output logic **420-440** and input logic **450-470** to provide the user with the richest interactive interface possible, based on the particular circumstances. In addition, by limiting or restricting the types of input and output mechanisms used to communicate based on user availability or other information, control logic **410** may reduce the cognitive load on the user with respect to interacting with user device **110**. That is, by reducing available input/output mechanisms for a particular scenario, the user will be presented with a simpler, more intuitive user interface.

[0046] As another example, assume that the user is at home in the evening. In this case, control logic **410** may provide all three of audio, video and haptic outputs and enable all three of key, touch and speech input mechanisms. For example, control logic **410** may access the user's, calendar and/or determine an availability status. Since the user is at home, assume that the availability status is "available" or "at home." Further assume that the user's calendar stored in user device **110** indicates that the user has no scheduled activities. In this case, audio, video and haptic output logic **420-440** may activate audio, video and haptic output channels/mechanisms to alert the user of, for example, incoming communications. In addition, all three of key input, touch input and speech input logic **450-470** may active key, touch and speech input channels/mechanisms to allow the user to respond to a received communication using any three of these input channels/mechanisms. In each case, control logic **410** may identify one or more appropriate output mechanisms and input mechanisms based on particular circumstances. This may provide a rich multi-media user experience, and also allow the user to more easily interact with user device **110** and reduce the cognitive load of the user associated with interacting with various functionality/programs executed by user device **110**.

[0047] User device **110** may also update the user-related information (e.g., availability status) on a real-time or near real-time basis (act **550**). For example, control logic **410** may update the user information at periodic intervals (e.g., every second, 10 seconds, 30 seconds, 5 minutes, etc.). Alternatively, control logic **410** may continuously monitor various applications/status indicators and immediately determine when the status of the user has changed (e.g., an IM availability status changes from available to unavailable). This enables control logic **410** to provide an appropriate input/output mechanism to the user as circumstances change, while still providing the richest user experience based on the particular situation.

[0048] As described above, in some implementations, control logic **410** may identify various operating conditions and tailor various input and output channels to provide the user with an intelligent, user-friendly interface. In some implementations, control logic **410** may use a processing or decision tree structure for providing particular input/output mechanisms to utilize.

[0049] For example, FIG. **6** illustrates an exemplary processing/decision tree that may be used by control logic **410**. Referring to FIG. **6**, processing tree **600** includes an initial action **610**. Action **610** may represent an action or input received by or provided to user device **110**, such as an incoming message. Action **610** may also represent a timed alert to be provided to the user (e.g., a reminder), or any event that may require a response. As illustrated in FIG. **6**, processing tree **600** may include three branches: 1) foreground (labeled point **612**), 2) ignore, and 3) background. Foreground **612** may correspond to control logic **410** handling or processing the action immediately. Ignore may correspond to a situation in which no further action is required and control logic **410** may ignore the action. For example, the user may set a preference for a particular caller indicating that incoming communications from that particular caller are to be ignored (e.g., user device **110** is not to activate any audio, video or haptic output mechanisms when the communication is received) and is to merely store an indication that the particular caller has sent a communication. Background may correspond to control logic **410** deferring handling of the action to a later time.

[0050] As an example, assume that action **610** corresponds to receiving a text message, such as an IM. Further assume that control logic **410** has determined that the user is available and that the message should be handled or processed immediately (i.e., foreground **612**).

[0051] As further shown in FIG. **6**, foreground point **612** includes three options for control logic **410**: 1) input option **620**; 2) manage option **630**; or 3) output option **640**. Input option **620** may involve control logic **410** activating one or more of key input mechanisms via, for example, key input logic **450**, touch input mechanisms via, for example, touch input logic **460** or audio/video inputs via, for example, speech input logic **470**. The user of user device **410** may then provide input to user device **110** based on the particular circumstances, as described above with respect to FIGS. **4** and **5**.

[0052] Referring back to FIG. **6**, processing tree **600** may also provide a number of branches/options with respect to audio/video input, labeled point **622**. For example, processing tree **600** may include branches for live, avatar/audio and static video. The "live" branch may correspond to control logic **410** providing or activating a live streaming input mechanism, such as activating a camera device included on user device **110** that may then be used to provide live streaming video to another device. The avatar/audio branch may correspond to control logic **410** activating an avatar/audio input mechanism on user device **110**. This option may allow the user to use an avatar to provide audio/video output or provide output without using an avatar. The static video branch may correspond to control logic **410** activating video input mechanisms on user device **110** that allow a user to respond via various video inputs, including pre-stored video clips or streaming of a single image (or multiple images), such as a photograph of the user. In each case, control logic **410** may automatically select the appropriate input mechanism, based on a number of factors (e.g., availability status, time of day, location, etc.) as described above with respect to FIG. **5**.

[0053] At point **612**, processing tree **600** may also include a manage option **630**. For the manage option **630**, control logic **410** may allow the user to, for example, add a party to a messaging/chat session, restrict a party from a messaging session and delete a third party from an ongoing messaging session between user device **110** and user device **120**. Control logic **410** may facilitate such management options using various icons or pictures representing parties, such as the parties at user devices **120** and **130**, via easy to use inputs, such as various single keystrokes on a keypad or keyboard to perform various functions, via voice inputs, etc., as described in more detail below.

[0054] At point **612**, processing tree **600** may include an output option **640**. For the output option **640**, control logic **410** may control or activate one or more audio, visual or haptic output mechanisms, such as logic **420-440**, in a similar manner to that described above with respect to FIG. **5**.

[0055] In each case, control logic **410** may traverse tree structure **600** tree to provide various input/output mechanisms, allow the user interact with other parties, perform various functions, etc., and provide the user with a media rich, user-friendly interface. Again, the particular input/output mechanisms may be based on user-related information. However, in each case, control logic **410** activates/provides the appropriate input/output mechanisms, such as providing one or more of N outputs and activating one or more of M inputs, to help reduce the cognitive load on the user with respect to performing the desired function.

[0056] Implementations described above have focused on providing audio, visual and/or haptic output and activating various key, touch or speech input mechanisms via the user interface of user device **110**. It should be understood that control logic **410** may control various input/output mechanisms to provide different types of input/output in any number of ways. For example, control logic **410** may provide any number of N and M inputs and outputs, including any number of audio, visual and/or haptic input/outputs based on the particular circumstances.

[0057] For example, FIG. **7** provides an exemplary table **700** of various inputs/outputs provided via user device **110**. Control logic **410** may provide inputs/outputs in accordance with any of the entries in table **700**. For example, entry **705** includes top, middle, bottom, which may correspond to control logic **410** outputting information at three different display locations on, for example, display **230**, to provide touch screen navigation/functionality at different locations or to provide audio panning locations at different locations of user device **110**. Entry **710** includes high, medium or low, which may correspond to control logic **410** controlling display brightness, haptic vibration intensity and audio frequency/volume using one of these three different levels. Entry **715** includes left, middle and right, which may correspond to control logic **410** controlling display locations, touch navigation or audio panning locations at three different areas of user device **110**. Entry **720** includes fast, medium or slow, which may correspond to control logic **410** controlling display movement, haptic vibration speed or audio playback speed at one of these three different rates.

[0058] As an example corresponding to entry **720**, assume that user device **110** receives a telephone call from a party designated in an address book/contact list as an important party (e.g., spouse, child, boss, etc.). Further assume that the user of user device **110** is in a meeting at work when the important party calls user device **110**. In this case, haptic output logic **440** may pulse or vibrate a vibrating mechanism with a particular frequency or intensity that corresponds to an important caller. In this manner, the user may sense the particular vibration-related output and determine that he/she has received an important communication. This may be useful in situations where the user's hands are occupied (e.g., driving) and the user is unable to quickly access user device **110**.

[0059] As another example, haptic output logic **440** may provide vibrations that are associated with a particular ringtone of a calling party. For example, if user device **110** has set up different ringtones for different callers, in situations where using audio output is not appropriate (e.g., user is in a meeting), haptic output logic **440** may control a vibrating mechanism to vibrate or pulse in time or to the beat of the song/ringtone associated with each particular caller. The user may be able to determine the caller by sensing the different vibration patterns.

[0060] Referring back to FIG. **7**, entry **725** may include front, middle and back, which may correspond to control logic **410** controlling display locations, haptic locations and audio panning locations via a front, middle or back locations of display **230** or user device **110**. Entry **730** may include light, medium or dark, which may correspond to control logic **410** controlling display characteristics via light, medium or dark colors or intensities. Entry **735** may include hot, warm and cold, which may correspond to control logic **410** controlling haptic feedback mechanisms to provide hot, warm or cold tactile feedback/sensations. Entry **740** may include audio, video or haptic, which may correspond to control logic **410** providing various device outputs as described above with respect to FIG. **4**. Entry **745** may include earcon, icon and hapticon, which may correspond to control logic **410** control-

ling various device output representations, such as output representations associated with hearing, seeing or feeling device outputs. Entry **750** may include yes, maybe and no, which may correspond to control logic **410** optionally providing output based on the particular circumstances, such as user availability. Entry **755** may include sharp, medium and dull, which may correspond to control logic **410** controlling audio, video or haptic feedback via sharp, medium or dull sounds/pictures/tactile sensations. Entry **760** may include I, IV and V, which may correspond to control logic **410** providing an audio icon or audio output sequence utilizing tones or progressions of a musical chord or key, such as the first, fourth and fifth notes of a particular chord or key that control logic **410** may provide via an audio output channel. The particular note that is output may provide the user with information identifying the particular output. Entry **765** may include red, yellow and green, which may correspond to control logic **410** providing visual feedback and visual tagging of content using red, yellow or green colors.

[0061] Table **700** provides exemplary variations associated with input/output mechanisms on user device **110** and corresponding ways in which control logic **410** and/or other devices of user device **110** may provide or modify these input/output mechanisms/channels to provide a rich, multimedia interface. It should be understood that additional or different groups of input/outputs may be provided via user device **110** in other implementations. In addition, in some implementations, the particular input/output mechanisms of user device **110** may be preconfigured prior to purchase of user device **110**. However, in some implementations, the user may modify or change any of the configurations associated with the user interface of user device **110** to provide his/her own customized input/output mechanisms based upon the particular circumstances.

[0062] In some implementations, the user's experience with respect to performing various functions via user device **110** may be further enhanced using a messaging manager. For example, user devices, such as cell phones, PDAs, etc., play an increasingly valuable part in allowing users to stay in communication with one another. In an exemplary implementation, a messaging manager may manage various different or heterogeneous messaging applications to facilitate and manage communication sessions, including multi-party sessions and multi-media communication sessions.

[0063] FIG. **8** is a functional diagram illustrating components implemented in user device **110** according to an exemplary implementation. Referring to FIG. **8**, user device **110** may include messaging manager **800**, short message service (SMS) program **810**, multimedia messaging service (MMS) program **820**, mobile instant messaging (MIM) program **830** and email program **840**. Messaging manager **800** may be implemented in control logic **410**, by processor **320** executing instructions stored in memory, such as memory **330**, or by other components in user device **110**. Messaging manager **800** may manage messaging programs and/or aid various messaging programs, such as one or more of programs **810**-**840**, to provide, for example, multi-party messaging sessions, as described in detail below.

[0064] SMS program **810**, MMS program **820**, MIM program **830** and email program **840** may allow the user of user device **110** to communicate via SMS messages, MMS messages, mobile IM, and email, respectively. These programs may be stored on user device **110**, such as in memory **330** or storage device **350** (FIG. **3**).

[0065] As further shown in FIG. **8**, user device **110** may also store contact information **850**, user preferences **860** and messaging log/ history **870** in memory, such as memory **330**, storage device **350** or another memory on user device **110**. Contact information **850** may include an address book storing information, such as telephone numbers, email addresses, and/or IM user names/identifiers, associated with friends, family, etc., of the user of user device **110**. Contact information **850** may also include information associated with a calendar application executed by user device **110**, such as schedule information, meeting information, travel information, etc., of the user of user device **110**. Contact information **850** may further include a "buddy list" identifying information various parties with whom the user of user device **110** may communicate. The "buddy list" may include IM usernames, identifiers, icons/pictures associated with the users in the list, etc., for parties who frequently communicate with the user of user device **110** via, for example, text messages, including IMs.

[0066] User preferences **860** may store preference information associated with the configuration of user device **110**. For example, user preferences **860** may store preference information indicating types of input mechanisms via which the user would like to receive indications of incoming messages, display setting for displaying various message, handling instructions for handling certain types of message, such as email messages, etc.

[0067] Messaging log/history **870** may store a log of communications to/from user device **110**. This information may be stored for a predetermined period of time and automatically erased after the period of time has expired. Alternatively, the user may set a user preference in user preferences **860** indicating a particular period of time for which user device **110** is to keep messages or for which messages are stored in network **140**. For example, the user may decide that he/she would like to keep messages from family members for a longer period of time than messages from work associates. In this case, the user may set different periods of time for saving messages from different messaging partners.

[0068] Messaging manager **800**, as described above, may facilitate communication sessions, including multi-party sessions for a user of user device **110**. FIG. **9** illustrates exemplary processing associated with a communication session. Processing may begin with user device **110** receiving a text-based message sent from user device **120** (act **910**). User device **110** may process the message using the appropriate messaging application (e.g., one of applications **810**-**840**). For example, assume that the message is a MIM received from a user named Bob at user device **120**. Further assume that the user at communication device **110**, Paul, is provided with an indication of the initial message, and optionally subsequent messages, via one or more of audio, visual or haptic output mechanism as described above with respect to FIGS. **4** and **5**. MIM program **830** and/or messaging manager **800** interacting with MIM program **830** may display the received message.

[0069] MIM program **830** and/or messaging manager **800** may then facilitate a messaging session between Paul and Bob by transmitting messages generated by Paul from user device **110** and receiving messages sent by Bob from user device **120** (act **910**). User device **110** may also display the transmitted and received messages (act **910**). For example, FIG. **10**A illustrates a portion of an exemplary messaging/ chat session provided on display **230**. In this example, the

messaging session between Bob and Paul (indicated as "Me" on display **230**) involves a web server problem that Bob is working on.

[0070] Now assume that Paul would like to add another party to the messaging session, such as Marty at user device **130**. In an exemplary implementation, messaging manager **800** may provide a number of input mechanisms to easily allow Paul to add a party to the messaging session. For example, Paul may enter the plus sign (+) via keypad **250** (FIG. **2**), followed by inputting "Marty," to add Marty to the messaging session (act **920**). For example, FIG. **10**A illustrates that message **1010** begins with +Marty, followed by a text message to Marty. Messaging manager **800** may receive the input to add Marty (i.e., +Marty). Messaging manager **800** may then automatically identify communication information (e.g., header information, such as an IP address, username, location, etc.) corresponding to Marty from, for example, Paul's buddy list stored in contact information **850** or elsewhere on user device **110**. Messaging manager **800** and/or MIM program **830** may send the message (i.e., "Web server is down" in this example) to user device **130**, which corresponds to Marty's user device, so that Marty can be included in the messaging session. Messaging manager **800** may also send the message (i.e., "Web server is down" in this example) to user device **120** (i.e., Bob's user device). Paul, Marty and Bob may then begin communicating via a multi-party messaging session.

[0071] For example, Marty may query Bob and Paul regarding the problem and all three parties will be able to view messages and respond in a multi-party session, as illustrated in display **230** of FIG. **10**A. In this case, assume that Paul would like to restrict one or more of the messaging parties from receiving a message. In an exemplary implementation, Paul may input the "at" sign (i.e., @) to limit the transmission of the message to only the desired party or parties, thereby restricting a particular message from another party or parties (act **930**). For example, as illustrated at message **1020** in FIG. **10**A, Paul may type in "@Marty" followed by a message. In this case, messaging manager **800** may send the message input after "@Marty" (i.e., Bob's been working on this all night in this example) to Marty only (act **1030**). This may be useful in situations where the sender does not want everyone (i.e., Bob in this case) to view the message.

[0072] Further assume that Paul at user device **110** would like to remove a party from the messaging session. In an exemplary implementation, Paul may input the "minus" sign (i.e., –) followed by the party that he wishes to remove (act **940**). For example, as illustrated at message **1030**, Paul may type in "–Bob", followed by a message. Messaging manager **800** may then remove or delete Bob from the session and send the message to Marty (act **940**). Paul and Marty may then continue to communicate via the messaging session, with Bob being closed out of the ongoing session. Bob, however, can be re-joined in the session at a later time by Paul (or Marty) entering +Bob.

[0073] In some implementations, a third party may wish to join a session between a user of user device **110** and a second party. In this case, messaging manager **800** may receive the request and provide a message on display **230** or an audio output via speaker **220** (FIG. **2**) indicating that a third party would like to join the communication session. The user may then select "add" on display **230** or voice "add" to allow the third party to enter the communication session. Similar to the discussion above with respect to FIGS. **4** and **5**, the particular output mechanism used to alert the user of the request of the third party may be based on the particular circumstances (e.g., availability status, location, party making the request, etc.).

[0074] The processing described above with respect to FIG. **9** uses simplified keypad or keyboard inputs, such as a one key mechanism (e.g., a single keypad or keystroke input such as the plus sign, the at sign, the minus sign), to quickly enter command information that will be used to control a multi-party messaging session. It should be understood that alternative keypad or keyboard inputs may be used to perform these and other functions. In addition, in alternative implementations, the user at user device **110** may also use icons or pictures associated with various parties to add parties, delete parties, restrict parties from receiving one or more messages, etc. For example, a user may select or click on an icon or picture associated with a particular party to add that party to a messaging session. In still other implementations, speech input may be used to provide commands to a messaging program.

[0075] For example, in an alternative implementation, Paul at user device **110** may voice "add Marty" or similar language in order to add Marty to the messaging session. In this case, speech input logic **470** (FIG. **4**) may use speech recognition logic to identify that the user would like to add Marty to the messaging session. Similarly, to restrict a message to only Marty, the user may voice "only Marty," and to remove a party, the user may voice "remove Bob". In this implementation, user device **110** may use speech recognition to convert voiced input into the desired command.

[0076] In addition, in some implementations, haptic feedback may be provided in conjunction with other feedback mechanisms to aid in managing messaging sessions. For example, haptic output logic **440** may be used to provide tactile feedback to the user for each of the various actions. As one example, after Paul inputs @Marty to restrict Bob from a particular message, haptic output logic **440** may provide a particular vibration or other tactile output (e.g., a hapticon) to inform the user that Bob was restricted from the message. The particular tactile feedback or hapticon may be provided based on the particular action performed by Paul. In addition, specific actions that trigger tactile feedback, as well as the particular tactile feedback provided, may be set by the user and stored in user preferences **860**.

[0077] Messaging manager **800** may also facilitate messaging sessions, including multi-party messaging sessions in other ways. For example, messaging manager **800** may use different techniques to display messages associated with a messaging session. As one example, display **230** may provide messages from a messaging session in a "page" mode, as illustrated in FIG. **10**B. Referring to FIG. **10**B, display **230** includes earlier messages located on the left side of the dotted line and more recent messages located on the right side of the dotted line. In some implementations, instead of a dotted line or other line separating the messages, display **230** may provide messages using a display format that more closely resembles pages in a book. That is, the left side of display may resemble one page and the right side may resemble the subsequent page of the book. In each case, the user may use one of control keys **240**, a scroll bar/button or forward/reverse arrows, such as arrows **1050** shown on display **230** in FIG. **10**B, or voice input to scroll backward and forward to read earlier or more recent messages. In this manner, the user at user device **110** may read a log of messages in a manner similar to reading pages of a book and/or may "flip" between

pages to quickly go back to earlier/later portions of the conversation. In alternative implementations, vertical scrolling may be used, as opposed to horizontal scrolling, to scroll between earlier and more recent messages. In still other implementations, different pages could be displayed by fading a page associated with earlier communications to the background and moving a more recent page toward the front of the display. In addition, different "pages" of the session may be displayed using different color backgrounds or via other display techniques. The log of messages may also be stored in messaging log/history **870**.

[0078] In some implementations, a user who has recently been added to a communication session that has been ongoing for a period of time may be able to view a messaging history from user device **110**. For example, in FIG. **10**A, when Marty was added to the communication session at message **1010**, messaging program **800** may send Marty an earlier portion of the communication session between Bob and Paul. This may allow Marty to scroll back to earlier messages and quickly come up to speed with respect to the communication session.

[0079] In addition, messaging manager **800** may allow the user to handle multiple communications concurrently. For example, Paul may communicate with Bob and Marty during a first session as described above, and also communicate with Jane and Bill during a second communication session that overlaps in time the first session with Bob and Marty. In this case, messaging manager **800** may flip between sessions to allow Paul to easily communicate with parties in both sessions. For example, messaging manager **800** may display messages in page-like mode in which messages from a first session are displayed on a current page and messages from another session are displayed on a different page. Alternatively, messaging manager **800** may fade a session in which Paul is not currently communicating to a background of display **230** or show the two sessions in a windowed manner. When user device **110** receives a communication involving the second session (and if Paul is not currently composing a message for the first session), the second communication session may be displayed as the current page, or brought to the foreground of display **230**, and the first session moved to the background. In either case, messaging manager **800** may allow the user to easily flip or change between two or more concurrent messaging sessions.

[0080] In other instances, messaging manager **800** may use colors to enhance the user's experience with respect to messaging sessions. For example, different colors of text may be used to identify different messaging parties. As an example, messages from Marty may be displayed in red, messages from Bob may be displayed in blue and messages from Paul may be displayed in black on display **230**. This may make it easier for the user to quickly determine who is texting/messaging. Messaging manager **800** may also use different color backgrounds for different communication sessions to enable the user to more easily track the various communication sessions. In still other implementations, different icons, avatars, pictures, emoticons, etc., associated with the different messaging partners may be used to enable the user to quickly identify various messaging parties.

[0081] In some implementations, messaging manager **800** may abstract unnecessary messaging details from the user and allow the user to interact with messaging manager **800** without having to consider whether to reply to a received message via a particular messaging program. For example, in some implementations, the user at user device **110** can simply interact with messaging manager **800** without worrying about whether to reply to a received message via email, MIM program **830**, etc.

[0082] As an example, user device **110** may receive a message from another device and messaging manager **800** may display the received message on display **230**. The user may then simply enter text to respond to the displayed message and messaging manager **800** may send the reply via the appropriate messaging program (i.e., SMS program **810**, MMS program **820**, MIM program **830**, email program **840**). In such instances, messaging manager **800** may automatically select the appropriate program and/or protocol for responding to a received message.

[0083] In still other implementations, the user of user device **110** may set preferences with respect to responding to various messages. For example, in some implementations, email messages may be analyzed to determine a proper "fit" for being provisioned via messaging manager **800**. As an example, in some instances, relatively short, person-to-person or one-to-few emails may be considered a good fit for processing via messaging manager **800**. However, lengthy or verbose emails, many-to-many emails (i.e., many "To" recipients and/or many "CC" recipients) and messages with multiple attachments may be considered to not be good fits for provisioning via messaging manager **800**.

[0084] In such instances, messaging manager **800** may access the user's preferences regarding how he/she would like to handle "bad fit" email messages. For example, user preferences **860** may indicate that messaging manager **800** may not respond to email messages that include more than three receiving parties. In such as case, the user may use email program **840** to compose and send replies, with no additional interaction with messaging manager **800**.

[0085] Alternatively, messaging manager **800** may prompt the user with respect to how he/she would like to handle email messages that are identified as being bad fits/inappropriate for handling via messaging manager **800**. For example, messaging manager **800** may provide a visual prompt on display **230** to inquire as to whether messaging manager **800** should forward the message to the appropriate parties. In either case, (i.e., preset preference or the user selects how he/she would like to respond), messaging manager **800** may operate in conjunction with the particular messaging program to allow the user to respond using the desired application (e.g., via email program **840** or via messaging manager **800**).

[0086] In instances where messaging manager **800** may be used to respond to the email message, messaging manager **800** may abstract or extract messaging protocol details associated with the received message and allow the user to respond to the message in the desired manner. Messaging manager **800** may also abstract or extract messaging protocol information and/or details associated with user devices that may be executing a different version of a messaging program than that executed by user device **110**. In such instances, messaging manager **800** may automatically make any necessary modifications "on the fly" to allow the user to communicate with such other devices.

[0087] Implementations described herein illustrate a user interface that controls audio, video and/or haptic input/output mechanisms. In addition, implementations described herein provide for managing communication sessions, including multi-party, multi-media messaging sessions.

[0088] The foregoing description of exemplary implementations provides illustration and description, but is not

intended to be exhaustive or to limit the embodiments described herein to the precise form disclosed. Modifications and variations are possible in light of the above teachings or may be acquired from practice of the embodiments.

[0089] For example, various features have been mainly described above with respect to a managing a user interface of a mobile device and/or managing messaging sessions between mobile devices. In other implementations, features described herein may be implemented in other types of media devices, such as a PC, laptop computer, television, gaming system, remote control etc., to simplify the user interface and reduce the cognitive load on the user. In still other implementations, messaging sessions described above as being between mobile devices may involve different types of devices, such as mobile devices, PCs, televisions, gaming systems, etc. That is, a mobile device may communicate with a PC, a television, a gaming system or other device during a multi-party messaging session. Still further, messaging manager **800** may allow a user to transfer a messaging session from a mobile device to another device. For example, when a user comes home, the user may wish to transfer a messaging session from his/her cell phone to a PC or television. In this case, messaging manager **800** may include an icon or a selection button to allow the user to easily transfer a current communication session to another device. The user may then continue to communicate via the other device.

[0090] Further, while series of acts have been described with respect to FIGS. **5** and **9**, the order of the acts may be varied in other implementations. Moreover, non-dependent acts may be implemented in parallel.

[0091] It will also be apparent that various features described above may be implemented in many different forms of software, firmware, and hardware in the implementations illustrated in the figures. The actual software code or specialized control hardware used to implement the various features is not limiting. Thus, the operation and behavior of the features of the invention were described without reference to the specific software code—it being understood that one would be able to design software and control hardware to implement the various features based on the description herein.

[0092] Further, certain features described above may be implemented as "logic" that performs one or more functions. This logic may include hardware, such as one or more processors, microprocessors, application specific integrated circuits, or field programmable gate arrays, software, or a combination of hardware and software.

[0093] In the preceding specification, various preferred embodiments have been described with reference to the accompanying drawings. It will, however, be evident that various modifications and changes may be made thereto, and additional embodiments may be implemented, without departing from the broader scope of the invention as set forth in the claims that follow. The specification and drawings are accordingly to be regarded in an illustrative rather than restrictive sense.

[0094] No element, act, or instruction used in the description of the present application should be construed as critical or essential to the invention unless explicitly described as such. Also, as used herein, the article "a" is intended to include one or more items. Where only one item is intended, the term "one" or similar language is used. Further, the phrase "based on" is intended to mean "based, at least in part, on" unless explicitly stated otherwise.

What is claimed is:

1. A device, comprising:

a communication interface configured to receive communications from other devices;

a user interface configured to provide at least one of audio, video or haptic output in response to received communications, the user interface including groups of potential outputs; and

logic configured to:

identify information associated with an availability status of a user of the device,

receive a first communication from an other device, and

provide one or more outputs in one of the groups of potential outputs via the user interface based on the information associated with the availability status of the user of the device.

2. The device of claim **1**, wherein when identifying information associated with the availability status of the user, the logic is configured to:

determine the availability status based on at least one of information stored in a calendar application, availability information associated with a messaging program, availability information input by the user, a location of the device, a current time, or a party associated with the first communication.

3. The device of claim **1**, wherein the logic is further configured to:

provide at two of audio, video or haptic output in the one group based on the information associated with the availability status of the user,

activate at least two of a keypad input mechanism, a speech recognition mechanism or a touch screen input mechanism based on the information associated with the availability status of the user,

detect a change in the availability status of the user, and

change at least one of the audio, video or haptic output to be provided to the user based on the detected change.

4. The device of claim **1**, wherein the logic is further configured to:

identify a first party associated with the first communication, and

provide an alert via the user interface based on the identified first party.

5. The device of claim **4**, wherein when providing an alert, the logic is configured to:

providing a first haptic output based on a ringtone associated with the first party or based on a priority status associated with the first party.

6. The device of claim **1**, wherein the logic is further configured to:

identify the one group based on the availability status of the user, the one group corresponding to a limited portion of potential outputs available via the user device, and

control the user interface to accept a limited portion of a plurality of potential inputs available via the user device based on the availability status of the user.

7. A device, comprising:

a communication interface configured to receive communications from a first party and transmit communications from a user of the device to the first party;

a display configured to display the communications received from the first party and the communications

transmitted from the user, the communications between the user and the first party corresponding to a messaging session;

an input device; and

logic configured to:

receive input from the user via the input device to add a second party to the messaging session, the input comprising one of a single keyboard input, a single keypad input, an icon selection or audio input from the user of the device, and

add the second party to the messaging session based on the received input.

8. The device of claim **7**, wherein the input comprises a keyboard or keypad input corresponding to a plus sign.

9. The device of claim **7**, wherein the input comprises:

a voice command from the user of the device.

10. The device of claim **7**, wherein the logic is further configured to:

output, via the display, communications from the first party in a first color and communications from the second party in a second color, the first and second colors being different.

11. The device of claim **7**, wherein the input device is further configured to:

receive input from the user to limit the transmission of a communication to only a designated one of the first party or second party, the input comprising a voice command or a keypad or keyboard input, and wherein the logic is further configured to:

forward the communication for transmission via the communication interface to the designated one of the first party or second party.

12. The device of claim **7**, further comprising:

a memory configured to store a plurality of communications between the user and the first and second parties, wherein the logic is further configured to:

display the plurality of communications in a page-like format, wherein the user may scroll backward or forward using the input device to view earlier or more recent communications.

13. The device of claim **12**, wherein the logic is further configured to:

forward at least some of the plurality of communications stored in the memory to the second party, the at least some of the plurality of communications corresponding to communications of the messaging session that were made prior to the second party joining the messaging session.

14. The device of claim **7**, wherein the logic is further configured to:

receive electronic mail messages via the communication interface,

access information associated with processing received electronic mail messages, and

process responses, provided by the user, to the electronic mail messages based on the accessed information.

15. The device of claim **14**, wherein the logic is further configured to:

transmit some responses to the received electronic mail messages via an electronic mail program, and

transmit other responses to the received electronic mail messages via a messaging manager application.

16. A method, comprising:

receiving, by a mobile device, a communication from a first party;

transmitting, by the mobile device, a response from a user of the mobile device to the first party;

displaying a plurality of messages, received by the mobile device from the first party and transmitted by the mobile device to the first party, the plurality of messages corresponding to a communication session between the user of the mobile device and the first party;

receiving input from the user to add a second party to the communication session between the user and the first party, the input comprising a voice command, keypad input or keyboard input; and

adding the second party to the communication session.

17. The method of claim **16**, further comprising:

displaying, by the user device, messages from the user in a first color, messages from the first party in a second color, and messages from the second party in a third color, the first, second and third colors being different from one another.

18. The method of claim **16**, further comprising:

receiving input from the user to remove the first party from the communication session, the input comprising a voice command or keypad or keyboard input.

19. The method of claim **16**, further comprising:

storing a plurality of messages between the user and the first party; and

forwarding at least some of the plurality of messages to the second party, the at least some of the plurality of messages corresponding to messages transmitted between the user and the first party prior to the second party joining the communication session.

20. The method of claim **16**, further comprising:

receiving electronic mail messages;

transmitting some responses to received electronic mail messages via an electronic mail application; and

transmitting other responses to received electronic mail messages via a messaging program.

21. A computer-readable medium having stored thereon sequences of instructions which, when executed by at least one processor, cause the at least one processor to:

identify information associated with an availability status of a user of a device;

receive a first communication from an other device; and

provide an audio, video or haptic output via a user interface of the device based on the information associated with the availability status of the user of the device.

22. The computer-readable medium of claim **21**, further including instructions for causing the at least one processor to:

manage a messaging session between a user of the device and a first party associated with the other device;

output messages from the messaging session in a page-like format; and

allow the user of the device to scroll or page to earlier portions of the messaging session.

23. The computer-readable medium of claim **22**, further including instructions for causing the at least one processor to:

receive input from the user of the device to add a second party to the messaging session and restrict a message for transmission to only a designated one of the first party or second party, the input comprising at least one of selection of an icon or use of one or more symbols on a keypad or keyboard.

* * * * *