US011916893B2

(12) **United States Patent**
Nix

(10) **Patent No.: US 11,916,893 B2**
(45) **Date of Patent: Feb. 27, 2024**

(54) **EMBEDDED UNIVERSAL INTEGRATED CIRCUIT CARD SUPPORTING TWO-FACTOR AUTHENTICATION**

(71) Applicant: **Network-1 Technologies, Inc.**, New York, NY (US)

(72) Inventor: **John A. Nix**, Evanston, IL (US)

(73) Assignee: **Network-1 Technologies, Inc.**, New York, NY (US)

(*) Notice: Subject to any disclaimer, the term of this patent is extended or adjusted under 35 U.S.C. 154(b) by 0 days.

(21) Appl. No.: **17/547,990**

(22) Filed: **Dec. 10, 2021**

(65) **Prior Publication Data**

US 2022/0103538 A1 Mar. 31, 2022

Related U.S. Application Data

(63) Continuation of application No. 16/453,682, filed on Jun. 26, 2019, now Pat. No. 11,233,780, which is a (Continued)

(51) **Int. Cl.**
H04L 29/06 (2006.01)
H04L 9/40 (2022.01)
(Continued)

(52) **U.S. Cl.**
CPC ***H04L 63/08*** (2013.01); ***H04B 1/3816*** (2013.01); ***H04L 9/0819*** (2013.01);
(Continued)

(58) **Field of Classification Search**
CPC .. H04W 12/35; H04W 12/06; H04L 63/0853; H04L 63/08
See application file for complete search history.

(56) **References Cited**

U.S. PATENT DOCUMENTS

5,216,715 A 6/1993 Markwitz
5,642,420 A 6/1997 Kuroda et al.
(Continued)

FOREIGN PATENT DOCUMENTS

AU 2019246774 10/2019
CA 2775853 A1 12/2012
(Continued)

OTHER PUBLICATIONS

ANSI X9.63 Overview, Key Agreement and Key Transport Using Elliptic Curve Cryptography, Simon Blake-Wilson, Certicom (2000).
(Continued)

Primary Examiner — Dao Q Ho
(74) *Attorney, Agent, or Firm* — Amster, Rothstein & Ebenstein LLP

(57) **ABSTRACT**

A module with an embedded universal integrated circuit card (eUICC) can include a profile for the eUICC. The profile can include a first and second shared secret key K for authenticating with a wireless network. The first shared secret key K can be encrypted with a first key, and the second shared secret key K can be encrypted with a second key. The module can (i) receive the first key, (ii) decrypt the first shared secret key K with the first key, and (iii) subsequently authenticate with the wireless network using the plaintext first shared secret key K. The wireless network can authenticate the user of the module using a second factor. The module can then (i) receive the second key, (ii) decrypt the second shared secret key K, and (iii) authenticate with the wireless network using the second shared secret key K. The module can comprise a mobile phone.

17 Claims, 12 Drawing Sheets

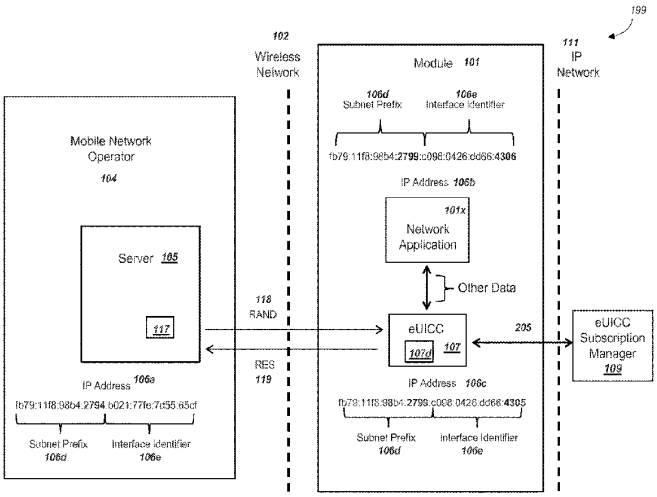

Related U.S. Application Data

continuation of application No. 16/110,804, filed on Aug. 23, 2018, now Pat. No. 10,382,422, which is a continuation of application No. 15/928,848, filed on Mar. 22, 2018, now Pat. No. 10,084,768, which is a continuation of application No. 14/751,119, filed on Jun. 25, 2015, now Pat. No. 9,961,060, which is a continuation of application No. 14/099,329, filed on Dec. 6, 2013, now Pat. No. 9,100,175.

(51) **Int. Cl.**

H04L 9/08	(2006.01)
H04L 9/32	(2006.01)
H04W 4/70	(2018.01)
H04W 12/30	(2021.01)
H04W 12/06	(2021.01)
H04B 1/3816	(2015.01)

(52) **U.S. Cl.**

CPC ***H04L 9/0869*** (2013.01); ***H04L 9/3271*** (2013.01); ***H04L 63/0428*** (2013.01); ***H04L 63/0435*** (2013.01); ***H04L 63/06*** (2013.01); ***H04L 63/062*** (2013.01); ***H04L 63/101*** (2013.01); ***H04W 4/70*** (2018.02); ***H04W 12/06*** (2013.01); ***H04W 12/35*** (2021.01)

(56) **References Cited**

U.S. PATENT DOCUMENTS

5,664,017	A	9/1997	Gressel et al.
5,852,665	A	12/1998	Gressel et al.
5,995,625	A	11/1999	Sudia et al.
6,038,322	A	3/2000	Harkins
6,256,733	B1	7/2001	Thakkar et al.
6,721,886	B1	4/2004	Uskela
6,804,357	B1	10/2004	Ikonen et al.
6,842,628	B1	1/2005	Arnold et al.
7,921,292	B1	4/2011	Pauker et al.
7,957,532	B2	6/2011	Chen et al.
8,127,142	B2	2/2012	Cuppett
8,352,739	B2	1/2013	Park et al.
8,434,139	B1	4/2013	Ortiz, Jr.
8,452,017	B2	5/2013	Sherkin
8,522,013	B2	8/2013	Zhang et al.
8,526,606	B2	9/2013	Muthaiah
8,555,067	B2	10/2013	Schell et al.
8,577,337	B2	11/2013	O'Leary
8,590,028	B2	11/2013	Saxena et al.
8,782,774	B1	7/2014	Pahl et al.
8,843,179	B2	9/2014	Li et al.
8,924,715	B2	12/2014	Schell et al.
8,948,386	B2	2/2015	Campagna et al.
8,965,366	B1	2/2015	Somayajula et al.
9,002,018	B2	4/2015	Wilkins et al.
9,020,479	B1	4/2015	Somayajula et al.
9,253,643	B2	2/2016	Pattar et al.
9,270,653	B2	2/2016	Maria
9,332,129	B2	5/2016	Li et al.
9,408,012	B2	8/2016	Li et al.
9,572,016	B2	2/2017	Cormier et al.
9,596,078	B2	3/2017	Nix
9,628,981	B2	4/2017	Park et al.
9,674,690	B2	6/2017	Lee et al.
9,698,981	B2	7/2017	Nix
9,794,775	B2	10/2017	Huber et al.
9,800,993	B2	10/2017	Lee et al.
9,807,605	B2	10/2017	Gao et al.
9,923,724	B2	3/2018	Lee et al.
10,169,587	B1	1/2019	Nix
10,621,352	B2	4/2020	Nix
2001/0029581	A1	10/2001	Knauft
2002/0018569	A1	2/2002	Panjwani et al.
2003/0003895	A1	1/2003	Wallentin et al.
2003/0211842	A1	11/2003	Kempf et al.
2004/0162472	A1	8/2004	Berson et al.
2004/0179684	A1	9/2004	Appenzeller et al.
2004/0221163	A1	11/2004	Jorgensen et al.
2005/0008159	A1	1/2005	Grilli et al.
2005/0021875	A1	1/2005	Bouthemy et al.
2005/0050323	A1	3/2005	Mizrah
2005/0058294	A1	3/2005	Chen et al.
2005/0120202	A1	6/2005	Cuellar et al.
2005/0138353	A1	6/2005	Spies et al.
2005/0193199	A1	9/2005	Asokan et al.
2005/0246282	A1	11/2005	Naslund et al.
2005/0278787	A1	12/2005	Naslund et al.
2006/0021063	A1	1/2006	Hori
2006/0056355	A1	3/2006	Love et al.
2006/0059344	A1	3/2006	Mononen
2006/0095771	A1	5/2006	Appenzeller et al.
2006/0129848	A1	6/2006	Paksoy et al.
2006/0206710	A1	9/2006	Gehrmann
2006/0281442	A1	12/2006	Lee et al.
2007/0101400	A1	5/2007	Freeman et al.
2007/0158439	A1	7/2007	Conner et al.
2007/0206799	A1	9/2007	Wingert et al.
2008/0016230	A1	1/2008	Holtmanns et al.
2008/0022089	A1	1/2008	Leedom
2008/0031204	A1	2/2008	Sood
2008/0044032	A1	2/2008	Lou et al.
2008/0107083	A1	5/2008	Shirota et al.
2008/0114978	A1	5/2008	Lehtovirta et al.
2008/0130879	A1	6/2008	Heinonen et al.
2008/0165698	A1	7/2008	Dalsgaard et al.
2008/0307218	A1	12/2008	Logvinov
2009/0028341	A1	1/2009	Hamachi
2009/0041110	A1	2/2009	Malladi
2009/0060197	A1	3/2009	Taylor et al.
2009/0077643	A1	3/2009	Schmidt et al.
2009/0113203	A1	4/2009	Tsuge et al.
2009/0116642	A1	5/2009	Yang et al.
2009/0125996	A1	5/2009	Guccione et al.
2009/0132806	A1	5/2009	Blommaert et al.
2009/0183541	A1	7/2009	Sadighi et al.
2009/0191857	A1	7/2009	Horn et al.
2009/0209232	A1	8/2009	Cha et al.
2009/0217348	A1	8/2009	Salmela et al.
2009/0268909	A1	10/2009	Girao et al.
2009/0274306	A1	11/2009	Nolte
2009/0282246	A1	11/2009	Gunther
2009/0313472	A1	12/2009	Guccione et al.
2010/0031042	A1	2/2010	Di Crescenzo et al.
2010/0062808	A1	3/2010	Cha et al.
2010/0093347	A1	4/2010	Hahn et al.
2010/0098253	A1	4/2010	Delerablee
2010/0166167	A1	7/2010	Karimi-Cherkandi et al.
2010/0195833	A1	8/2010	Priestley et al.
2010/0199334	A1	8/2010	Ehrensvard et al.
2010/0223461	A1	9/2010	Drader et al.
2010/0275028	A1	10/2010	Takashima
2011/0016321	A1	1/2011	Sundaram et al.
2011/0035584	A1	2/2011	Meyerstein et al.
2011/0035604	A1	2/2011	Habraken
2011/0055553	A1	3/2011	Lee et al.
2011/0158411	A1	6/2011	Medvinsky et al.
2011/0167272	A1	7/2011	Kolesnikov
2011/0213959	A1	9/2011	Bodi et al.
2011/0237281	A1	9/2011	Busropan et al.
2011/0268022	A1	11/2011	Xu
2011/0269422	A1	11/2011	Xu et al.
2011/0269461	A1	11/2011	Xu et al.
2011/0269472	A1	11/2011	Xu et al.
2011/0270747	A1	11/2011	Xu
2011/0291803	A1	12/2011	Bajic et al.
2011/0314287	A1	12/2011	Escott et al.
2012/0011360	A1	1/2012	Engels et al.
2012/0011362	A1*	1/2012	Lambert H04L 9/0844 713/168
2012/0023336	A1	1/2012	Natarajan
2012/0030461	A1	2/2012	Willey et al.
2012/0033613	A1	2/2012	Lin et al.
2012/0072732	A1	3/2012	Canard et al.

(56) **References Cited**

U.S. PATENT DOCUMENTS

2012/0087493 A1* 4/2012 Chidambaram H04L 9/0841 713/182
2012/0089568 A1 4/2012 Manley et al.
2012/0108205 A1 5/2012 Schell et al.
2012/0117635 A1 5/2012 Schell et al.
2012/0159153 A1 6/2012 Shim et al.
2012/0170451 A1 7/2012 Viswanathan et al.
2012/0190354 A1 7/2012 Merrien et al.
2012/0084568 A1 8/2012 Sarikaya et al.
2012/0214444 A1 8/2012 McBride et al.
2012/0260086 A1 10/2012 Haggerty et al.
2012/0260090 A1 10/2012 Hauck et al.
2012/0260095 A1 10/2012 Von Hauck et al.
2012/0263298 A1 10/2012 Suh et al.
2012/0278490 A1 11/2012 Sennett et al.
2012/0300932 A1 11/2012 Cambridge et al.
2012/0331292 A1 12/2012 Haggerty et al.
2012/0331298 A1 12/2012 Xu et al.
2013/0007442 A1 1/2013 Mao et al.
2013/0012168 A1 1/2013 Rajadurai et al.
2013/0028184 A1 1/2013 Lee et al.
2013/0091556 A1 4/2013 Horn et al.
2013/0114810 A1 5/2013 Kobayashi et al.
2013/0117824 A1 5/2013 Naslund et al.
2013/0122864 A1 5/2013 Haggerty et al.
2013/0149996 A1 6/2013 King et al.
2013/0157673 A1 6/2013 Brusilovsky
2013/0165073 A1 6/2013 Madsen
2013/0165075 A1 6/2013 Rishy-Maharaj et al.
2013/0166915 A1 6/2013 desai et al.
2013/0173747 A1 7/2013 Kim et al.
2013/0173926 A1 7/2013 Morese et al.
2013/0179962 A1 7/2013 Arial et al.
2013/0182586 A1 7/2013 Paladugu et al.
2013/0183932 A1 7/2013 Emilainen et al.
2013/0212637 A1 8/2013 Guccione et al.
2013/0227646 A1 8/2013 Haggerty et al.
2013/0231087 A1 9/2013 O'Leary
2013/0283047 A1 10/2013 Merrien et al.
2013/0294602 A1 11/2013 Huxham et al.
2013/0305345 A1 11/2013 Bugenhagen
2013/0322621 A1 12/2013 Yoon et al.
2013/0331063 A1 12/2013 Cormier et al.
2013/0340040 A1 12/2013 Park et al.
2013/0344864 A1 12/2013 Park et al.
2014/0003604 A1 1/2014 Campagna et al.
2014/0040628 A1 2/2014 Fort et al.
2014/0049653 A1 2/2014 Leonard et al.
2014/0053241 A1 2/2014 Norman et al.
2014/0073375 A1 3/2014 Li et al.
2014/0082358 A1 3/2014 Nakhjiri et al.
2014/0082359 A1 3/2014 Nakhjiri et al.
2014/0082538 A1 3/2014 Nakhjiri et al.
2014/0082539 A1 3/2014 Nakhjiri et al.
2014/0087790 A1 3/2014 Babbage et al.
2014/0101444 A1 4/2014 Lee et al.
2014/0108801 A1 4/2014 McBride et al.
2014/0115335 A1 4/2014 Jorden et al.
2014/0120874 A1 5/2014 Kang et al.
2014/0122878 A1 5/2014 Cho et al.
2014/0140507 A1 5/2014 Park et al.
2014/0140509 A1 5/2014 Chastain et al.
2014/0143534 A1 5/2014 Chastain et al.
2014/0143826 A1 5/2014 Sharp et al.
2014/0161113 A1 6/2014 Cui et al.
2014/0165155 A1 6/2014 Zhang
2014/0192976 A1 7/2014 Yoon et al.
2014/0219447 A1 8/2014 Park et al.
2014/0219448 A1 8/2014 Froels et al.
2014/0235210 A1 8/2014 Park et al.
2014/0237101 A1* 8/2014 Park H04W 8/205 709/223
2014/0244994 A1 8/2014 Yu
2014/0273913 A1 9/2014 Michel et al.
2014/0281483 A1 9/2014 Vigliaturo et al.
2014/0287725 A1 9/2014 Lee
2014/0308991 A1 10/2014 Lee et al.
2014/0329502 A1 11/2014 Lee et al.
2014/0337937 A1 11/2014 Truskovsky et al.
2014/0351403 A1 11/2014 Lein et al.
2014/0357229 A1 12/2014 Lee et al.
2015/0012743 A1 1/2015 Holtmanns et al.
2015/0017910 A1 1/2015 Li et al.
2015/0071139 A1 3/2015 Nix
2015/0087269 A1* 3/2015 Lee H04W 8/20 455/411
2015/0089214 A1 3/2015 Dupre
2015/0092590 A1 4/2015 Zhu et al.
2015/0095514 A1 4/2015 Yu
2015/0095648 A1 4/2015 Nix
2015/0106616 A1 4/2015 Nix
2015/0113275 A1 4/2015 Kim et al.
2015/0121066 A1 4/2015 Nix
2015/0121495 A1 4/2015 Gao et al.
2015/0143125 A1 5/2015 Nix
2015/0163056 A1 6/2015 Nix
2015/0215126 A1 7/2015 Ashdown
2015/0222604 A1 8/2015 Ylonen
2015/0222619 A1 8/2015 Hughes et al.
2015/0281964 A1 10/2015 Seo et al.
2015/0350881 A1 12/2015 Weiss et al.
2016/0014112 A1 1/2016 Gunning et al.
2016/0057725 A1 2/2016 Suh
2016/0088096 A1 3/2016 Quiriconi et al.
2016/0127132 A1 5/2016 Lee et al.
2016/0149903 A1 5/2016 Suh
2016/0294829 A1 10/2016 Angus
2017/0206532 A1 7/2017 Choi
2019/0313246 A1 10/2019 Nix
2019/0332774 A1 10/2019 Nix
2019/0356482 A1 11/2019 Nix
2020/0162247 A1 5/2020 Nix
2020/0162269 A1 5/2020 Nix
2020/0226258 A1 7/2020 Nix
2020/0280436 A1 9/2020 Nix
2021/0126801 A1 4/2021 Nix
2021/0184842 A1 6/2021 Nix
2021/0194681 A1 6/2021 Nix
2021/0211279 A1 7/2021 Nix
2021/0218560 A1 7/2021 Nix

FOREIGN PATENT DOCUMENTS

CA 2965119 10/2014
CA 2969829 12/2014
CA 3110641 A1 10/2019
CA 3110468 A1 11/2019
DE 19803936 A1 8/1999
EA 14868381.6 12/2014
EP 1981 224 10/2008
EP 3766222 A1 1/2021
GB 1608573 10/2014
GB 2100530 10/2014
GB 2518976 A 4/2015
HK 17101082.8 10/2014
HK 17106540.3 12/2014
KR 10-2013-0026352 A 3/2013
KR 10-2013-0026958 A 3/2013
KR 20130026351 A 3/2013
WO 2011138238 A1 11/2011
WO 2013027085 A1 2/2013
WO 2013/048084 A2 4/2013
WO 2013066077 A1 5/2013
WO 2019178312 A1 9/2019
WO 2019209598 A1 10/2019
WO 2019222319 A1 11/2019
WO 2019246206 A1 12/2019
WO 2020006162 A1 1/2020
WO 2020061023 A1 3/2020
WO 2020123959 A1 6/2020
WO 2020223319 A1 11/2020

(56) **References Cited**

FOREIGN PATENT DOCUMENTS

WO	2021007235	A1	1/2021
WO	2021087221	A1	5/2021

OTHER PUBLICATIONS

U.S. Appl. No. 17/647,812, filed Jan. 13, 2022, Application Undergoing Preexam Processing.
U.S. Appl. No. 17/304,922, filed Jun. 28, 2021, Ready for Examination.
U.S. Appl. No. 17/249,242, filed Feb. 24, 2021, Pending—Ready for Examination.
U.S. Appl. No. 16/879,325, filed May 20, 2020, U.S. Pat. No. 11,082,218.
U.S. Appl. No. 16/843,107, filed Apr. 8, 2020, Allowed—Notice of Allowance dated Nov. 8, 2021.
U.S. Appl. No. 16/721,153, filed Dec. 19, 2019, RCE Filed Aug. 28, 2021, Supplemental Response to Final Rejection filed Sep. 2, 2021.
U.S. Appl. No. 16/593,561, filed Oct. 4, 2019, Allowed—Notice of Allowance dated Oct. 14, 2021.
U.S. Appl. No. 16/453,682, filed Jun. 26, 2019, Allowed—Notice of Allowance dated Sep. 14, 2021 (USP to Issue Jan. 25, 2022).
U.S. Appl. No. 16/271,455, filed Feb. 8, 2019, U.S. Pat. No. 10,594,679.
U.S. Appl. No. 16/271,428, filed Feb. 8, 2019, U.S. Pat. No. 10,523,432.
U.S. Appl. No. 16/201,401, filed Nov. 27, 2018, U.S. Pat. No. 10,700,856.
U.S. Appl. No. 16/200,118, filed Nov. 26, 2018, U.S. Pat. No. 10,498,530.
U.S. Appl. No. 16/110,804, filed Aug. 23, 2018, U.S. Pat. No. 10,382,422.
U.S. Appl. No. 16/036,506, filed Jul. 16, 2018, U.S. Pat. No. 10,530,575.
U.S. Appl. No. 15/983,957, filed May 18, 2018, U.S. Pat. No. 10,177,911.
U.S. Appl. No. 15/973,012, filed May 7, 2018, U.S. Pat. No. 10,250,386.
U.S. Appl. No. 15/972,914, filed May 7, 2018, U.S. Pat. No. 10,652,017.
U.S. Appl. No. 15/928,848, filed Mar. 22, 2018, U.S. Pat. No. 10,084,768.
U.S. Appl. No. 15/010,905, filed Jan. 29, 2016, U.S. Pat. No. 9,641,327.
U.S. Appl. No. 15/680,758, filed Aug. 18, 2017, U.S. Pat. No. 10,187,206.
U.S. Appl. No. 15/162,292, filed May 23, 2016, U.S. Pat. No. 10,362,012.
U.S. Appl. No. 14/751,119, filed Jun. 25, 2015, US. Pat. No. 9,961,060.
U.S. Appl. No. 15/457,700, filed Mar. 13, 2017, U.S. Pat. No. 9,998,281.
U.S. Appl. No. 15/583,968, filed May 1, 2017, U.S. Pat. No. 10,057,059.
U.S. Appl. No. 15/043,293, filed Feb. 12, 2016, U.S. Pat. No. 9,998,280.
U.S. Appl. No. 15/642,088, filed Jul. 5, 2017, U.S. Pat. No. 10,003,461.
U.S. Appl. No. 15/130,146, filed Apr. 15, 2016, U.S. Pat. No. 9,742,562.
U.S. Appl. No. 15/162,302, filed May 23, 2016, U.S. Pat. No. 9,698,981.
U.S. Appl. No. 14/789,255, filed Jul. 1, 2015, U.S. Pat. No. 9,596,078.
U.S. Appl. No. 14/139,419, filed Dec. 23, 2013, U.S. Pat. No. 9,351,162.
U.S. Appl. No. 14/136,711, filed Dec. 20, 2013, U.S. Pat. No. 9,300,473.
U.S. Appl. No. 14/099,329, filed Dec. 6, 2013, U.S. Pat. No. 9,100,175.
U.S. Appl. No. 14/084,141, filed Nov. 19, 2013, U.S. Pat. No. 9,319,223.
U.S. Appl. No. 14/064,618, filed Oct. 28, 2013, U.S. Pat. No. 9,118,464.
U.S. Appl. No. 14/055,606, filed Oct. 16, 2013, U.S. Pat. No. 9,276,740.
U.S. Appl. No. 14/039,401, filed Sep. 27, 2013, U.S. Pat. No. 9,288,059.
U.S. Appl. No. 14/023,181, filed Sep. 10, 2013, U.S. Pat. No. 9,350,550.
Cakulev et al., "An EAP Authentication Method Based on Identity-Based Authenticated Key Exchange," Aug. 2012, pp. 1-32.
Gollmann, "Authentication—Myths and Misconceptions," Progress in Computer Science and Applied Logic, vol. 20, 2001, pp. 203-225.
Tin et al., "Provably Secure Mobile Key Exchange: Applying the Canetti-Krawczyk Approach," Information Security Research Centre, Queensland University of Technology, Australia, 2003, pp. 166-179.
Hegland et al., "A Framework for Authentication in NBD Tactical Ad Hoc Networks," IEEE Communications Magazine, Oct. 2011, pp. 64-71.
Nicholson et al., "Mobile Device Security Using Transient Authentication," IEEE Transactions on Mobile Computing, vol. 5, No. II, Nov. 2006, pp. 1489-1502.
Schwaiger et al., "Smart Card Security for Fieldbus Systems," 2003, pp. 398-406.
CSMG, Reprogrammable SIMs: Technology, Evolution and Implications, Sep. 25, 2012, pp. 1-95.
GlobalPlatform Inc., GlobalPlatform Card Specification, Version 2.2.1, Jan. 2011, pp. 1-303.
GlobalPlatform Inc., GlobalPlatform Card Security Upgrade for Card Content Management, Card Specification v 2.2.—Amendment E, Version 1.0, Nov. 2011, pp. 1-35.
GSM Association, Embedded SIM Task Force Requirements and Use Cases, Version 1.0, Feb. 21, 2011, pp. 1-38.
Kirk H.M. Wong et al., A Dynamic User Authentication Scheme for Wireless Sensor Networks, Proceedings of the IEEE International Conference on Sensor Networks, Ubiquitous, and Trustworthy Computing (SUTC'06), pp. 1-8.
Pierre E. Abi-Char, et al., A Fast and Secure Elliptic Curve Based Authenticated Key Agreement Protocol For Low Power Mobile Communications, The 2007 International Conference on Next Generation Mobile Applications, Services and Technologies (NGMAST 2007), pp. 1-6.
Jun Shao, et al., An Improved Deniable Authentication Protocol, Department of Computer Science and Engineering, Shanghai Jiao Tong University, Shanghai 200030, People's Republic of China, pp. 1-3.
Chris Foresman, Embedded SIM could cause carrier conflict for Apple, Nov. 19, 2010, pp. 1-2.
Embedded UICC Remote Provisioning Discussion, Source: Rogers Wireless, 3GPP/SA3-LI#46, Quebec City, Canada, Jul. 17-19, 2012, p. 1-39.
GSMA Launches Embedded SIM Initiative to Support the Connected Future, Nov. 18, 2010, p. 1-4.
Chang-Seop Park, On Certificate-Based Security Protocols for Wireless Mobile Communication Systems, Dankook University, IEEE Network Sep./Oct. 1997, pp. 50-55.
M. Prasad, et al., Secure Authentication Key Agreement Protocol for Long Term Evolution—Advanced, Research Scholar, Associate Professor, Department of Computer Science & Engineering, Pondicherry Engineering College, Puducherry, India, Elsevier, 2012, pp. 158-162.
Eun-Jun Yoon, et al., Secure Deniable Authentication Protocol Based on ElGamal Cryptography, 2008 International Conference on Information Security and Assurance, pp. 36-39.
Pietre-Cambacedes et al., Cryptographic key management for SCADA systems—issues and perspectives, 2008 International Conference on Information Security and Assurance, IEEE, pp. 156-161.

(56) **References Cited**

OTHER PUBLICATIONS

Bender et al., Evolution of SIM provisioning towards a flexible MCIM provisioning in M2M vertical industries, 16th International Conference on Intelligence in Next Generation Networks, IEEE, 2012, pp. 57-64.
Park et al., Secure Profile Provisioning Architecture for Embedded UICC, 2013 International Conference on Availability, Reliability and Security, IEEE, 2013, pp. 297-303.
Appenzeller et al., Identity-Based Encryption Architecture and Supporting Data Structures RFC 5408, 2009, pp. 1-30.
Baugher et al., Group Key Management Architecture, RFC Draft, 2001, pp. 1-20.
Ben Saied, Yosra; Olivereau, Alexis; Laurent, Maryline; "A Distributed Approach for Secure M2M Communications", 5th International Conference on New Technologies, Mobility and Security (NTMS), May 7-10, 2012, pp. 1-7.
Boyen et al., Anonymous Hierarchical Identity-Based Encryption (Without Random Oracles), 2006.
Boyen et al., Identity-Based Cryptography Standard (IBCS) #1: Supersingular Curve Implementations of the BF and BBI Cryptosystems, RFC 5091, 2007, pp. 1-63.
Harney et al., Group Key Management Protocol (GKMP) Architecture, 1994, pp. 1-19.
Kiltz et al., CCA2 Secure IBE: Standard Model Efficiency through Authenticated Symmetric Encryption, 2008.
Krylov, What is Kerberos Authentication?, 2003, pp. 1-4.
Martin, Introduction to Identity-Based Encryption, ISBN-13 978-1-59693-238-8, 2008.
Merrian-Webster, Network, 2014.
Park et al., A New Practical Identity-Based Encryption System, 2003, pp. 1-27.
Park et al., Secure Profile Provisioning Architecture for Embedded UICC, 2013 IEEE, pp. 297-303.
Shih, Jie-Ren; Hu, Yongbo; Hsiao, Ming-Chun; Chen, Ming-Shing; Shen, Wen-Chng; Yang, Bo-Yin; Wu, An-Yeu; Cheng, Chen-Mou; "Securing M2M with Post-Quantum Public-Key Cryptography", IEEE Journal on Emerging and Selected Topics in Circuits and Systems, Mar. 7, 2013, pp. 106-116.
Voltage Security, The Identity-Based Encryption Advantage, 2015.
Yang et al., Identity-Based Key Agreement and Encryption for Wireless Sensor Networks, IJCSNS International Joumal of Computer Science and Network Security, vol. 6, No. 5B, May 2006, pp. 182-189.
Youngblood, An Introduction to Identity-based Cryptography, 2005.
Zhu et al., Public Key Cryptography for Initial Authentication in Kerberos (PPKINIT), RFC 4556, 2006, pp. 1-42.
Search Report issued in UK Application No. GB2108534.5 dated Jul. 7, 2021.
TLS 1.3 Wish List Presentation, IETF 87 (Eric Rescorla), dated Aug. 1, 2013.
European Patent Office Communication with European Search Report and European Search Opinion issued in EP 21182424.8 dated Oct. 12, 2021.
European Patent Office Communication with European Search Report and European Search Opinion issued in EP 21182451.1 dated Oct. 12, 2021.
European Patent Office Communication with European Search Report and European Search Opinion issued in EP 21182432.1 dated Oct. 12, 2021.
International Search Report for PCT/US2014/068544 dated Feb. 13, 2015.
T. Pornin, Deterministic Usage of the Digital Signature Algorithm (DSA) and Elliptic Curve Digital Signature Algorithm ECDSA), Internet Engineering Task Force RFC 6979, Aug. 2013, pp. I-79.
GSMA, Fast Dormancy Best Practices Version 1.0,Jul. 27, 2011, TS.18, pp. 1-23.
N. Chu et al, Exalted: Expanding LTE for Devices, European Commission for Information Society and Media, Oct. 31, 2012, pp. 1-141.
J. Huang et al, A Close Examination of Performance and Power Characteristics of 4G LTE Networks, Mobisys' 12, Jun. 25-29, 2012, pp. 1-14.
F. Qian et al, TOP: Tail Optimization Protocol for Cellular Resource Allocation, 18th IEEE International Conference on Network Protocols (ICNP), 2010, Oct. 5-8, 2010, pp. 285-298.
ETSI, Machine-to-Machine communications (M2M), mia, dla, and mid interfaces, TS 102.921 v1.1.1, Feb. 2012, pp. 1-538.
C. Downey, Migrating Legacy M2M Systems to the Cloud, http://www.ecnmag.com/articles/2013/02/migrating-legacy-m2m-systems-cloud, Feb. 2013, pp. 1-2.
A. Wander et al, Energy Analysis of Public-Key Cryptography on Small Wireless Devices, Sun Microsystems Laboratories, pp. 1-16.
V. Martinez et al, A Survey of the Elliptic Curve Integrated Encryption Scheme, Journal of Computer Science and Engineering, vol. 2, Aug. 2010, pp. 7-13.
ETSI, UMTS;LTE; SIM/USIM Internal and External Interworking Aspects, TR 131900 v. 10.0.0, May 2011, pp. 1-41.
International Search Report and Written Opinion for PCT/US2014/062435 dated Feb. 6, 2015.
Wikipedia, RSA (algorithm), http://en.wikipedia.org/wiki/RSA_(algorithm), Sep. 9, 2013, pp. 1-12.
Wikipedia, Elliptic Curve Cryptography, http://en.wikipedia.org/wiki/Elliptic_curve_cryptography, Sep. 9, 2013, pp. 1-8.
L. Larzon, The Lightweight User Datagram Protocol (UDP-Lite), Internet Engineering Task Force RFC 3828, Jul. 2004, pp. 1-12.
Wikipedia, Digital Signature, http://en.wikipedia.orglwiki/Digital_signature, Sep. 9, 2013, pp. 1-10.
D. Cooper, Internet X.509 Public Key Infrastructure Certificate and Certificate Revocation List (CRL) Profile, Internet Engineering Task Force RFC 5280, pp. 1-133.
J. Jonsson et al, Public-Key Cryptography Standards (PKCS) #1: RSA Cryptography Specifications Version 2.1, Internet Engineering Task Force RFC 3447, Feb. 2003, pp. 1-72.
D. McGrew et al, Fundamental Elliptic Curve Cryptography Algorithms, Internet Engineering Task Force RFC 6090, Feb. 2011, pp. 1-34.
Wikipedia, Elliptic Curve Diffie-Hellman, http://en.wikipedia.org/wiki/Elliptic_curve_Diffie%E2%80%93Hellman, Sep. 24, 2013, pp. 1-2.
ETSI, Smart Cards; Embedded UICC; Requirements Specification, TS 103 383 v12.1.0, Jun. 2013, pp. 1-20.
3GPP, 3rd Generation Partnership Project; Technical Specification Group Services and System Aspects; 3GPP System Architecture Evolution (SAE); Security architecture, 3GPP TS 33.401 V12.9.0 (Sep. 2013) pp. 1-75.
3GPP, 3rd Generation Partnership Project; Technical Specification Group Core Network and Terminals; Non-Access-Stratum (NAS) protocol for Evolved Packet System (EPS); Stage 3, 3GPP TS 24.301 v12.2.0, Sep. 2013 pp. 1-6, 63-100.
ETSI, Smart Cards; UICC—Terminal Interfaces; Physical and Logical Characteristics, TS 102 221 v11.0.0, Jun. 2012, pp. 1-181.

* cited by examiner

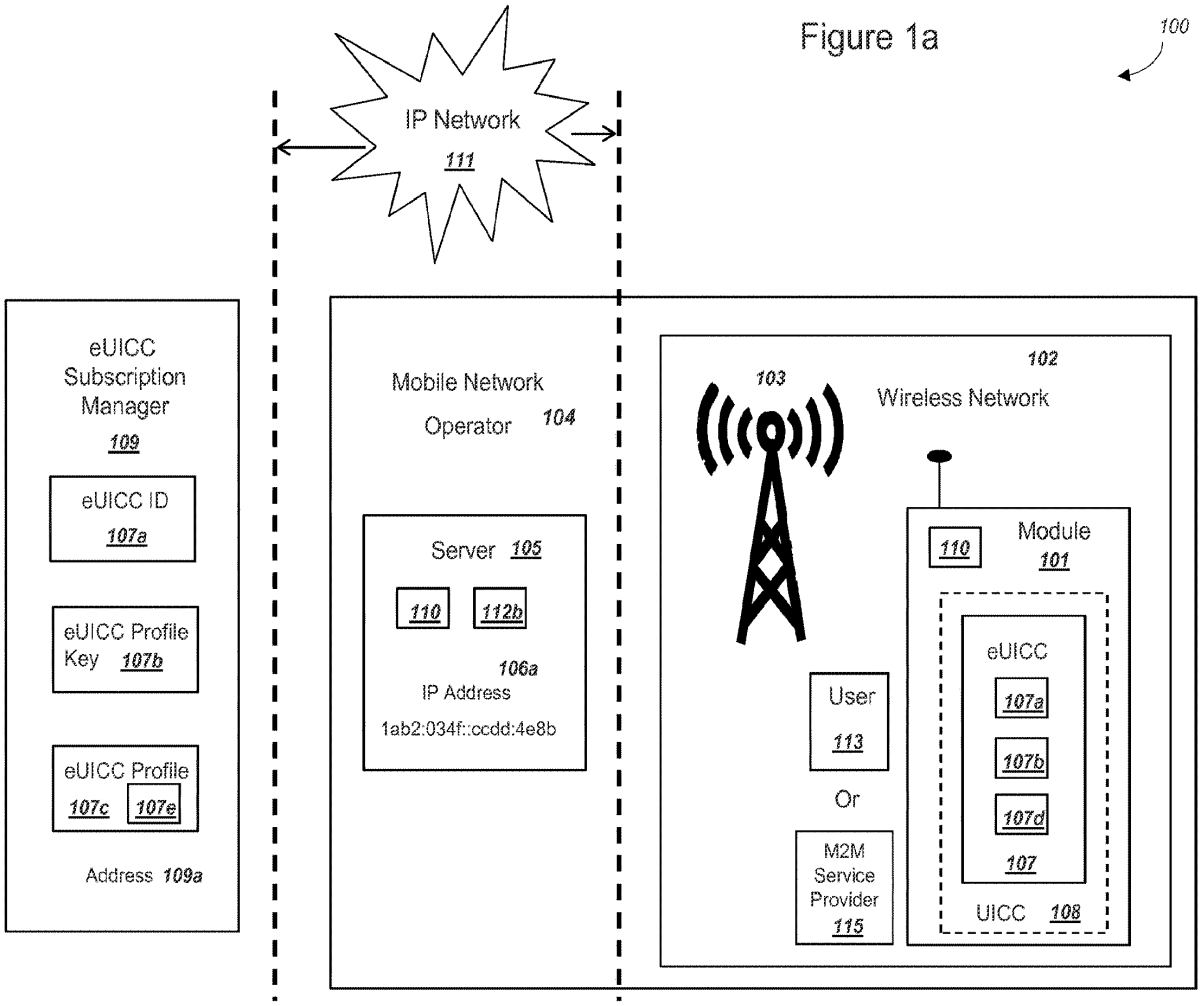
100
IP Network
111
eUICC
Subscription
Manager
109
eUICC ID
107a
eUICC Profile
Key 107b
eUICC Profile
107c
107e
Address 109a
Mobile Network
Operator 104
Server 105
110
112b
106a
IP Address
1ab2:034f::ccdd:4e8b
103
102
Wireless Network
110
Module
101
eUICC
107a
107b
107d
107
UICC 108
User
113
Or
M2M
Service
Provider
115

Figure 1a

Figure 1b

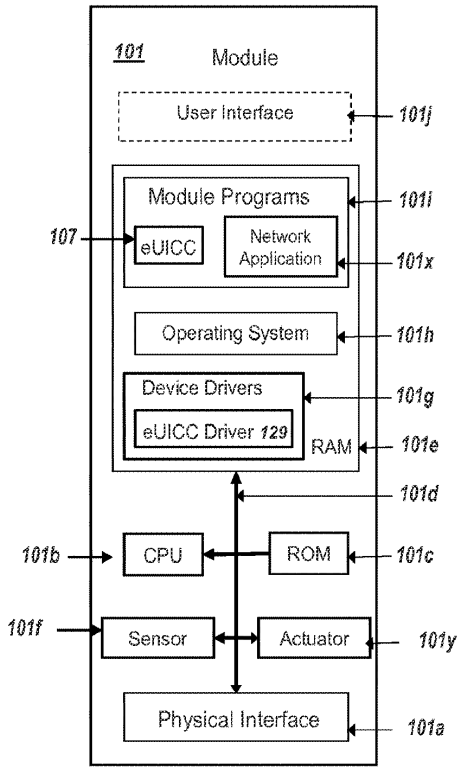

Figure 1c

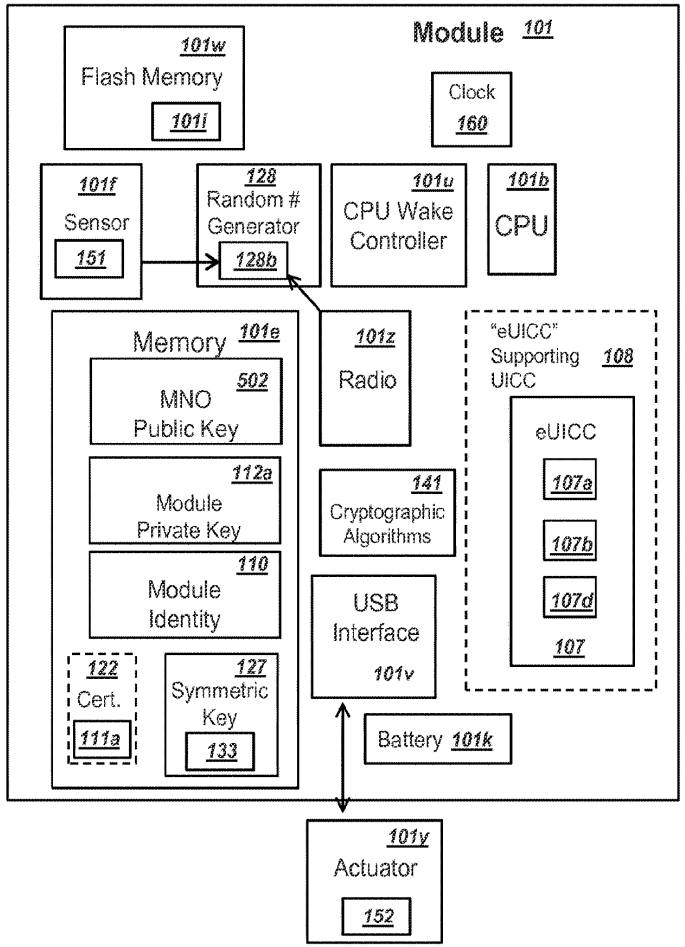

Figure 1d

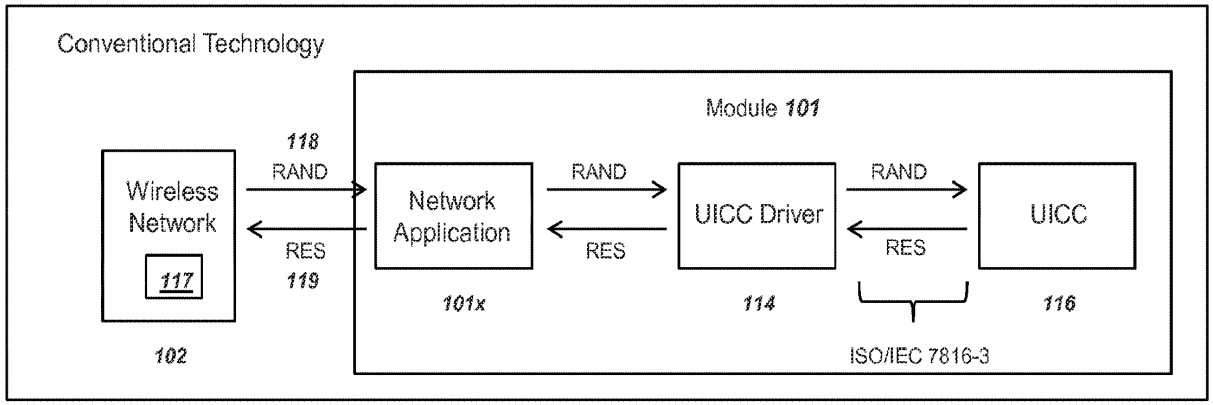

Figure 1e

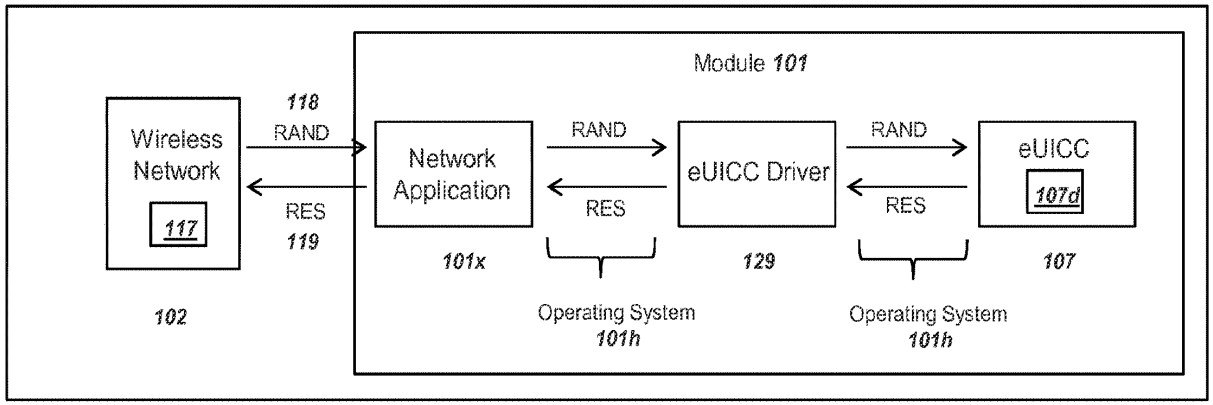

Figure 1f

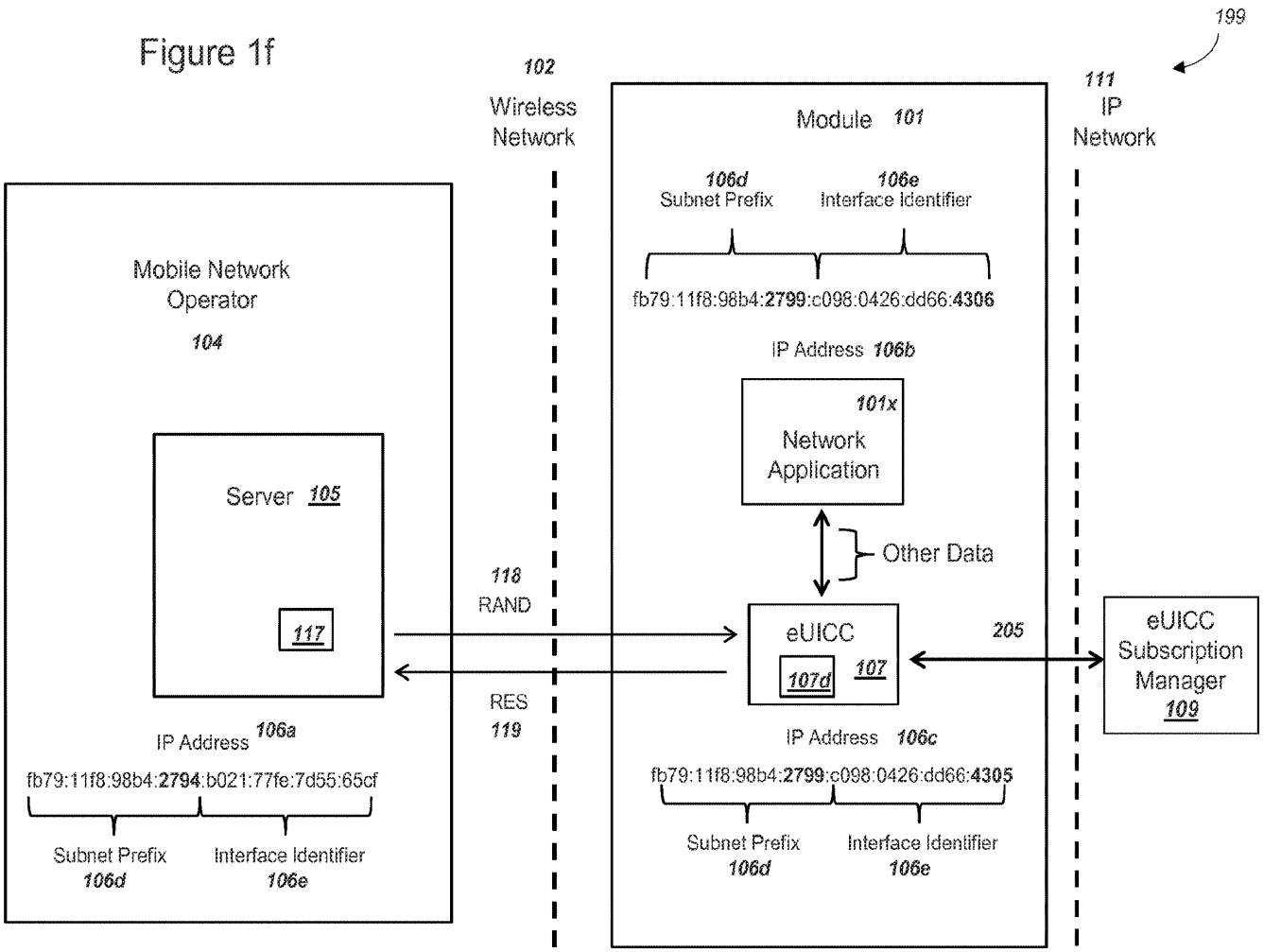
199
102
Wireless Network
111
IP Network
Module 101
106d
Subnet Prefix
106e
Interface Identifier
fb79:11f8:98b4:2799:c098:0426:dd66:4306
IP Address 106b
101x
Network Application
Other Data
Mobile Network Operator
104
Server 105
117
118
RAND
RES
119
eUICC
107d
107
205
eUICC Subscription Manager
109
IP Address 106a
fb79:11f8:98b4:2794:b021:77fe:7d55:65cf
Subnet Prefix
106d
Interface Identifier
106e
IP Address 106c
fb79:11f8:98b4:2799:c098:0426:dd66:4305
Subnet Prefix
106d
Interface Identifier
106e

Figure 2a

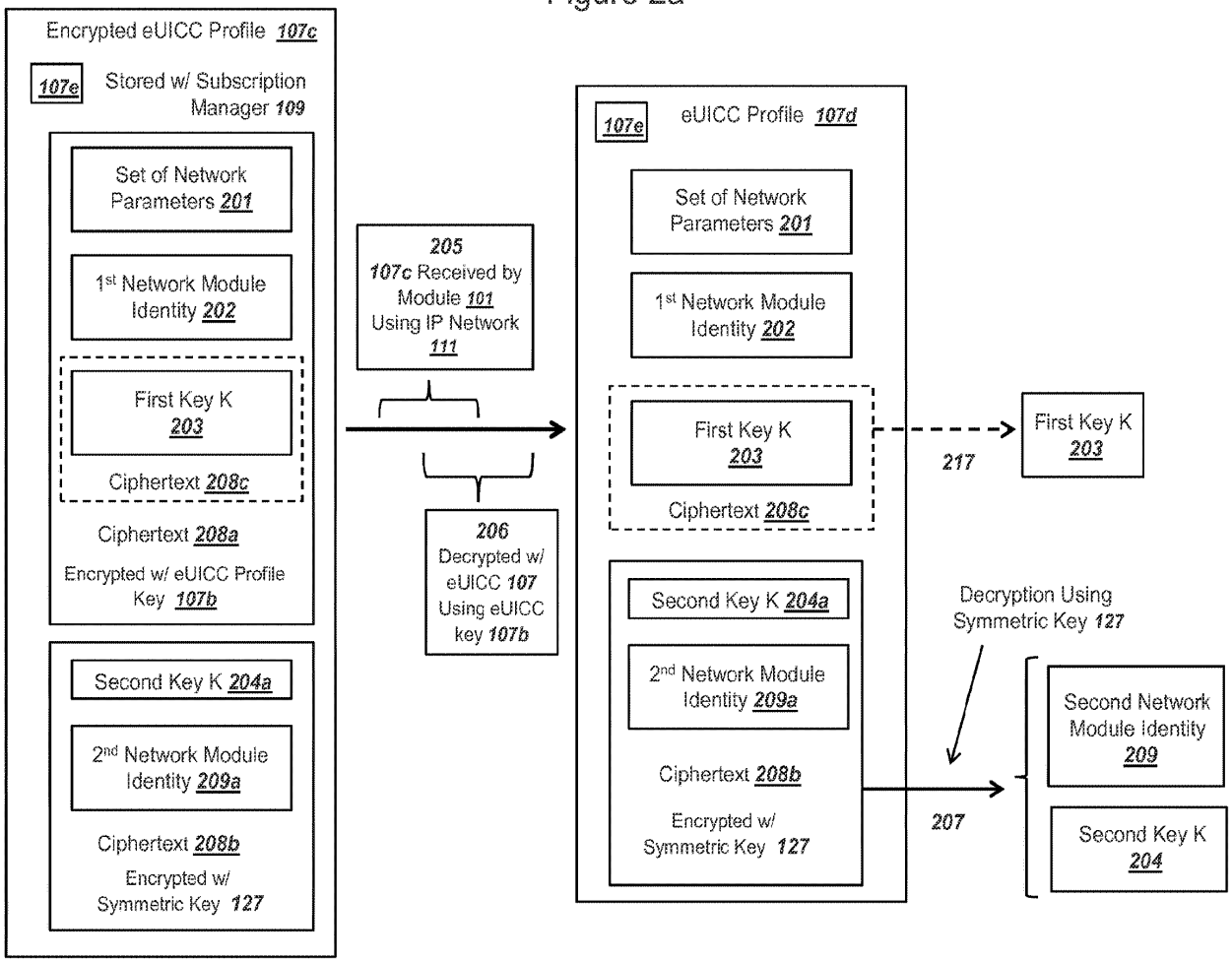
Encrypted eUICC Profile 107c
107e
Stored w/ Subscription Manager 109
Set of Network Parameters 201
1st Network Module Identity 202
First Key K 203
Ciphertext 208c
Ciphertext 208a
Encrypted w/ eUICC Profile Key 107b
Second Key K 204a
2nd Network Module Identity 209a
Ciphertext 208b
Encrypted w/ Symmetric Key 127
205
107c Received by Module 101 Using IP Network 111
206
Decrypted w/ eUICC 107 Using eUICC key 107b
107e
eUICC Profile 107d
Set of Network Parameters 201
1st Network Module Identity 202
First Key K 203
Ciphertext 208c
Second Key K 204a
2nd Network Module Identity 209a
Ciphertext 208b
Encrypted w/ Symmetric Key 127
217
First Key K 203
Decryption Using Symmetric Key 127
207
Second Network Module Identity 209
Second Key K 204

Figure 2b

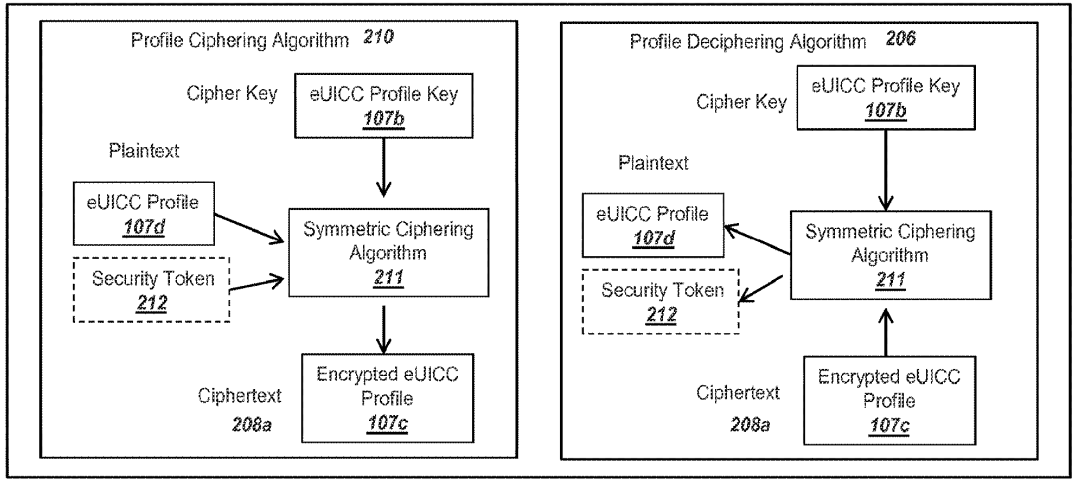

Figure 2c

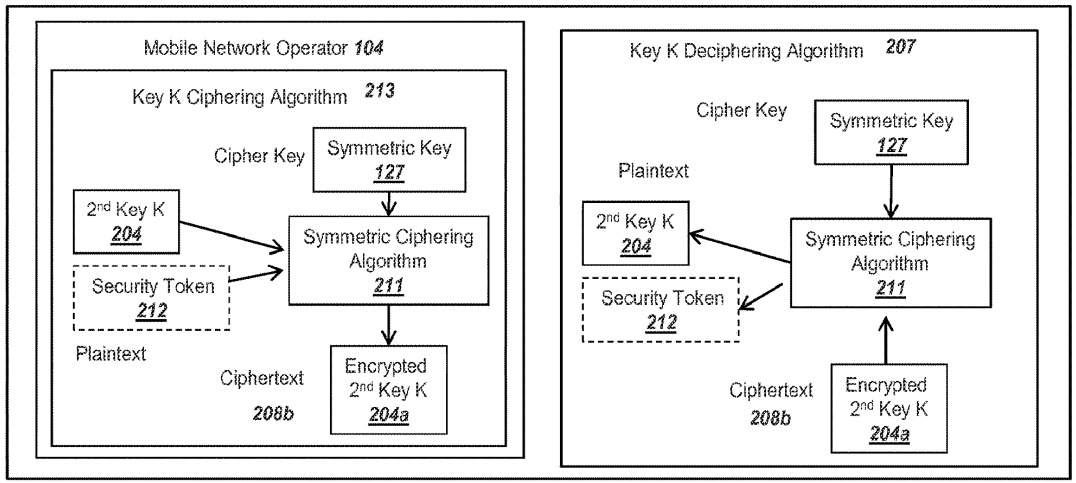

Figure 2d

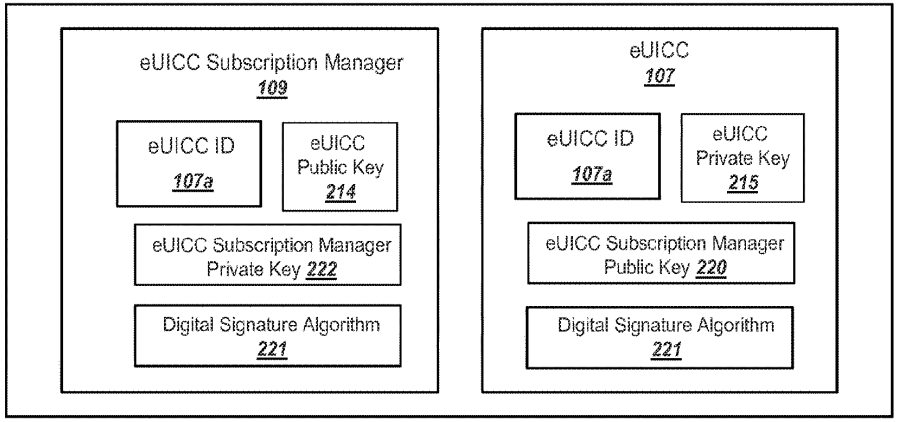

Figure 2e

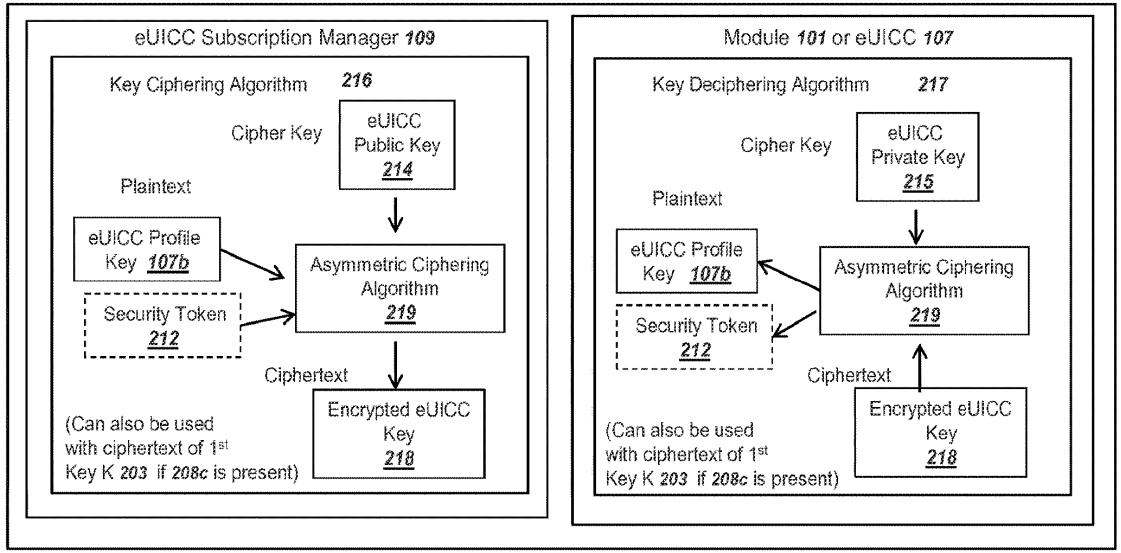

Figure 3

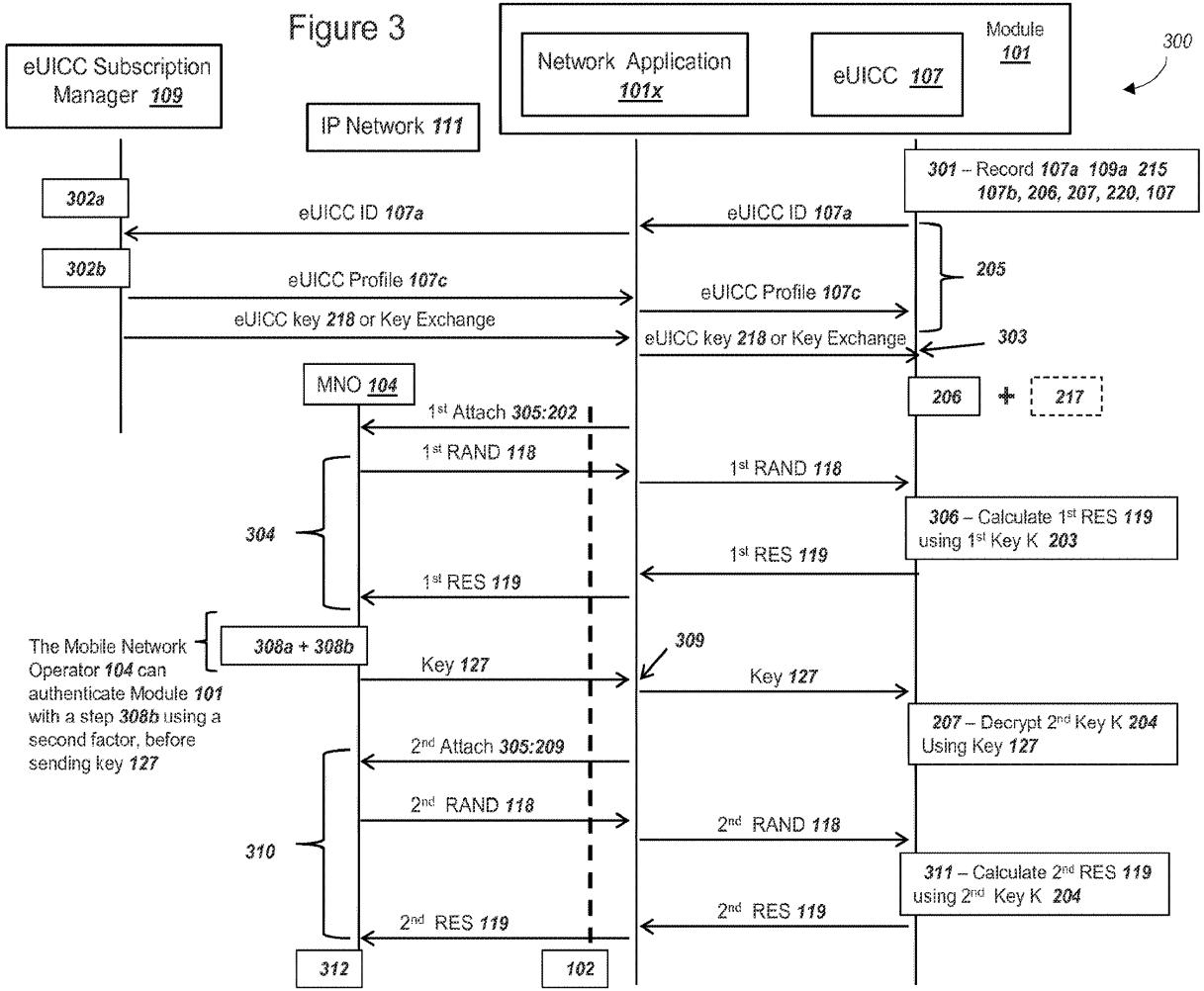
eUICC Subscription Manager 109
IP Network 111
Network Application 101x
eUICC 107
Module 101
300
302a
302b
eUICC ID 107a
eUICC Profile 107c
eUICC key 218 or Key Exchange
301 – Record 107a 109a 215 107b, 206, 207, 220, 107
205
303
206
217
MNO 104
1st Attach 305:202
1st RAND 118
304
306 – Calculate 1st RES 119 using 1st Key K 203
1st RES 119
The Mobile Network Operator 104 can authenticate Module 101 with a step 308b using a second factor, before sending key 127
308a + 308b
309
Key 127
207 – Decrypt 2nd Key K 204 Using Key 127
2nd Attach 305:209
2nd RAND 118
310
311 – Calculate 2nd RES 119 using 2nd Key K 204
2nd RES 119
312
102

Figure 4

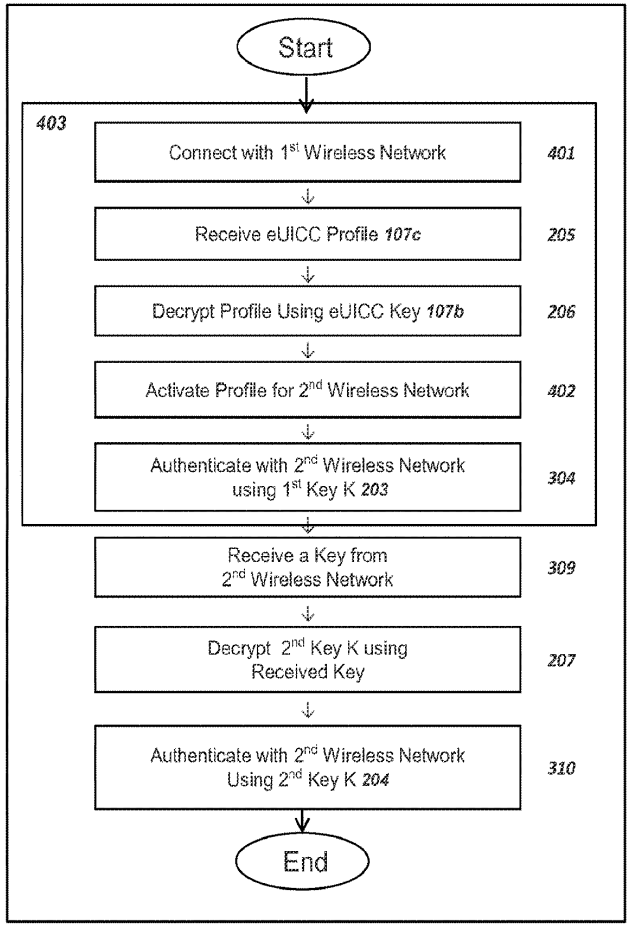
Start
403
Connect with 1st Wireless Network
401
Receive eUICC Profile 107c
205
Decrypt Profile Using eUICC Key 107b
206
Activate Profile for 2nd Wireless Network
402
Authenticate with 2nd Wireless Network using 1st Key K 203
304
Receive a Key from 2nd Wireless Network
309
Decrypt 2nd Key K using Received Key
207
Authenticate with 2nd Wireless Network Using 2nd Key K 204
310
End

Figure 5a

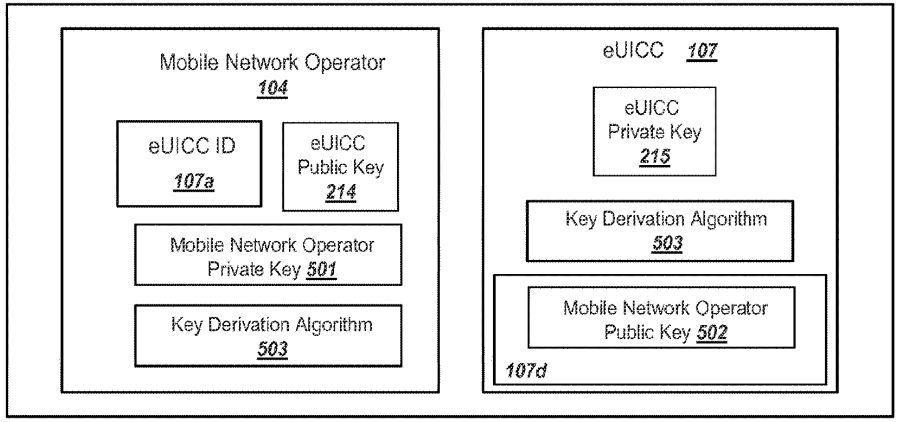

Figure 5b

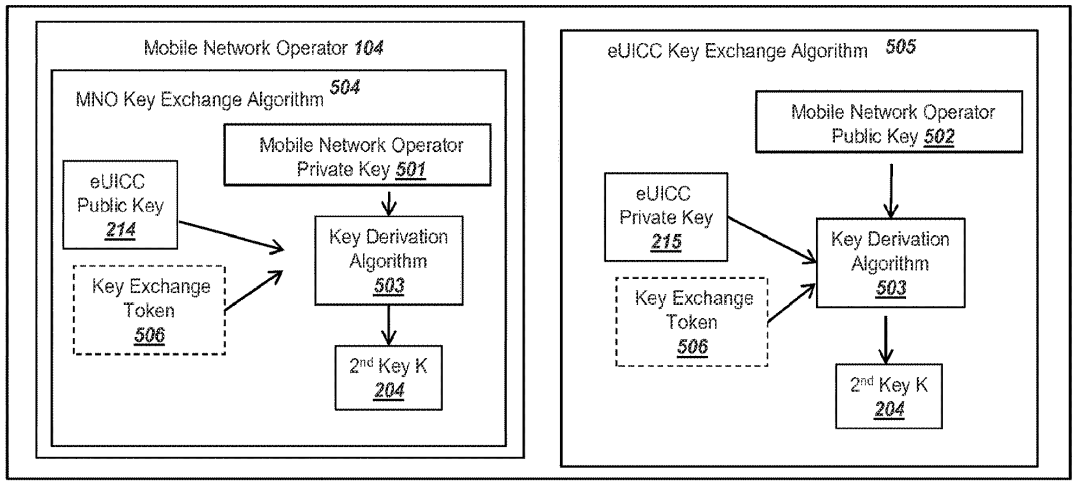

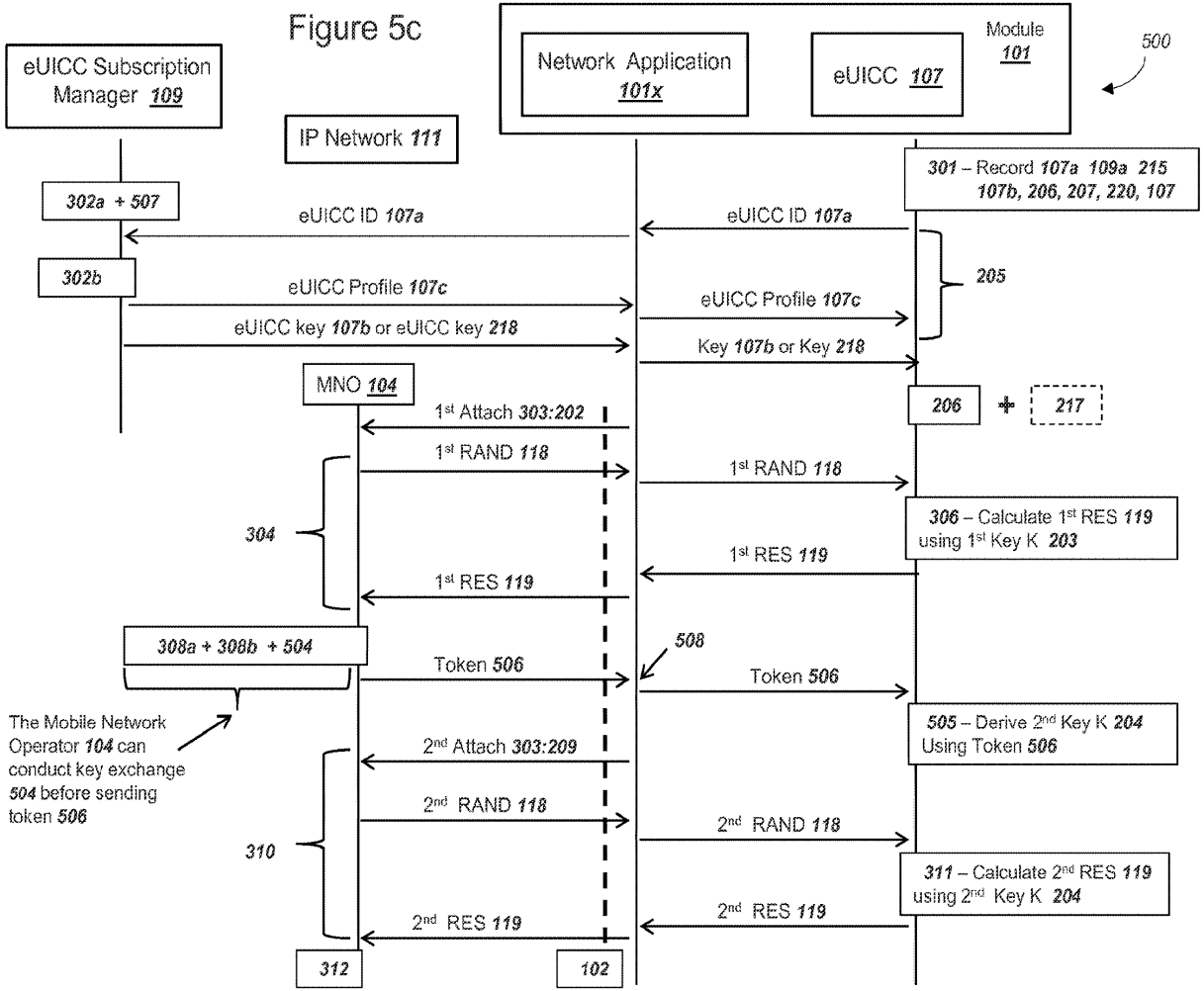
Figure 5c
eUICC Subscription Manager 109
IP Network 111
Network Application 101x
eUICC 107
Module 101
500
302a + 507
eUICC ID 107a
eUICC ID 107a
301 – Record 107a 109a 215 107b, 206, 207, 220, 107
302b
eUICC Profile 107c
eUICC Profile 107c
205
eUICC key 107b or eUICC key 218
Key 107b or Key 218
MNO 104
206
217
1st Attach 303:202
1st RAND 118
1st RAND 118
304
306 – Calculate 1st RES 119 using 1st Key K 203
1st RES 119
1st RES 119
308a + 308b + 504
508
Token 506
Token 506
The Mobile Network Operator 104 can conduct key exchange 504 before sending token 506
505 – Derive 2nd Key K 204 Using Token 506
2nd Attach 303:209
2nd RAND 118
2nd RAND 118
310
311 – Calculate 2nd RES 119 using 2nd Key K 204
2nd RES 119
2nd RES 119
312
102

Figure 6

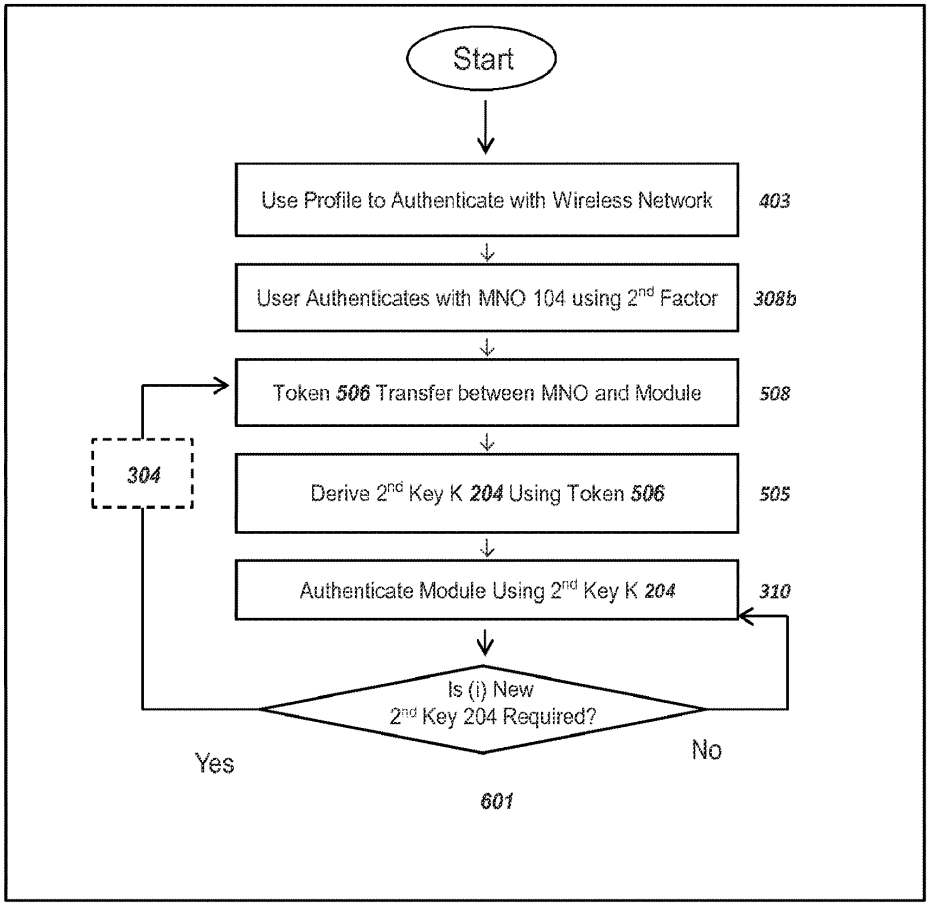
Start
Use Profile to Authenticate with Wireless Network
403
User Authenticates with MNO 104 using 2nd Factor
308b
Token 506 Transfer between MNO and Module
508
304
Derive 2nd Key K 204 Using Token 506
505
Authenticate Module Using 2nd Key K 204
310
Is (i) New
2nd Key 204 Required?
Yes
No
601

EMBEDDED UNIVERSAL INTEGRATED CIRCUIT CARD SUPPORTING TWO-FACTOR AUTHENTICATION

CROSS-REFERENCE TO RELATED APPLICATIONS

This is a continuation of U.S. patent application Ser. No. 16/453,682, filed Jun. 26, 2019, entitled "Embedded Universal Integrated Circuit Card Supporting Two-Factor Authentication," which is a continuation of U.S. patent application Ser. No. 16/110,804, filed Aug. 23, 2018, entitled "Embedded Universal Integrated Circuit Card Supporting Two-Factor Authentication," which is a continuation of U.S. patent application Ser. No. 15/928,848, filed Mar. 22, 2018, entitled "EMBEDDED UNIVERSAL INTEGRATED CIRCUIT CARD SUPPORTING TWO-FACTOR AUTHENTICATION," which is a continuation of U.S. patent application Ser. No. 14/751,119, filed Jun. 25, 2015, entitled "An Embedded Universal Integrated Circuit Card Supporting Two-Factor Authentication", now U.S. Pat. No. 9,961,060, which is a continuation of U.S. patent application Ser. No. 14/099,329, filed Dec. 6, 2013, entitled "An Embedded Universal Integrated Circuit Card Supporting Two-Factor Authentication," now U.S. Pat. No. 9,100,175, the contents of all of which are incorporated herein by reference in their entirety.

The subject matter of this application is related to the subject matter of U.S. patent application Ser. No. 14/084,141, filed Nov. 19, 2013 in the name of John Nix, entitled "Key Derivation for a Module using an Embedded Universal Integrated Circuit Card," now U.S. Pat. No. 9,319,223, which is hereby incorporated by reference in its entirety.

BACKGROUND

Technical Field

The present methods and systems relate to communications for a module, and more particularly, to methods and systems for using an embedded universal integrated circuit card (eUICC), where the methods and systems also support the authentication of a user associated with the eUICC.

Description of Related Art

The combination of "machine-to-machine" (M2M) communications and using low-cost sensors, Internet connections, and processors is a promising and growing field. Among many potential benefits, M2M technologies allow the remote monitoring and/or control of people, assets, or a location where manual monitoring is not economic, or costs can be significantly reduced by using automated monitoring as opposed to manual techniques. Prominent examples today include vending machines, automobiles, alarm systems, and remote sensors. Fast growing markets for M2M applications today include tracking devices for shipping containers or pallets, health applications such as, but not limited to, the remote monitoring of a person's glucose levels or heartbeat, monitoring of industrial equipment deployed in the field, and security systems. Many M2M applications leverage either wired Internet connections or wireless connections, and both types of connections continue to grow rapidly. M2M applications may also be referred to as "the Internet of things".

M2M communications can provide remote control over actuators that may be connected to a M2M device, such as, but not limited to, turning on or off a power switch, locking or unlocking a door, adjusting a speed of a motor, or similar remote control. A decision to change or adjust an actuator associated with an M2M device can utilize one or a series of sensor measurements. An M2M device may also be referred to as a "wireless module" or also simply a module. As one example, if a building or room is too cold, then temperature can be reported to a central server by an M2M device and the server can instruct the M2M device to turn on a switch that activates heat or adjusts a thermostat. As the costs for computer and networking hardware continue to decline, together with the growing ease of obtaining either wired or wireless Internet access for small form-factor devices, the number of economically favorable applications for M2M communications grows.

Many M2M applications can leverage wireless networking technologies. Wireless technologies such as, but not limited to, wireless local area networks and wireless wide area networks have proliferated around the world over the past 15 years, and usage of these wireless networks is also expected to continue to grow. Wireless local area network (LAN) technologies include WiFi and wireless wide area network (WAN) technologies include 3rd Generation Partnership Project's (3GPP) 3rd Generation (3G) Universal Mobile Telecommunications System (UMTS) and 4th Generation (4G) Long-term Evolution (LTE), LTE Advanced, and the Institute of Electrical and Electronics Engineers' (IEEE) 802.16 standard, also known as WiMax. The use of wireless technologies with M2M communications creates new opportunities for the deployment of M2M modules in locations less suitable for fixed-wire Internet access, but also creates a significant new class of problems that need to be solved.

One class of problems for using M2M modules with traditional wireless networks results from basic design considerations for the wireless networks, where many wireless wide-area networking standards were designed and optimized for mobile phones, including smart phones. A core element of traditional wireless WAN technologies such as 3GPP and ETSI standards over the past 20 years has included the use of a subscriber identity module (SIM) card within 2G networks and a related universal integrated circuit card (UICC) for 3G and 4G networks, including LTE networks. ETSI standards for a physical UICC as of 2013 include ETSI TR 102 216. Traditionally, these cards have been supplied by a mobile network operator (MNO) and contain a pre-shared secret key K in addition to a set of parameters for a mobile phone or user equipment to connect with the wireless network operated by the MNO. The parameters could include (i) an identity such as an IMSI, (ii) a set of frequencies for a mobile phone to scan in order to locate a beacon signal from the MNO, (iii) a preferred access list of other MNOs in order to support roaming in locations where the MNI associated with the IMSI is not available, and (iv) many other related parameters as well. The physical media and cards in the form of a UICC can be appropriate or suitable for a mobile phone or mobile handset, where an end user can readily replace or "swap out" the physical card as the mobile phone changes geographical locations or due to other preferences for the subscriber or end-user. Distributors of either mobile handsets or mobile phone service can physically insert or change an appropriate UICC for the mobile phones as well.

However, the rapid growth for "machine-to-machine" applications has created significant challenges to the traditional model of utilizing physical media such as a UICC in order to provide data and parameters for a module's con-

nectivity to a MNO. Exemplary reasons for potential difficulties with physical media such as a UICC in M2M applications include (i) the modules may be installed in remote locations that are difficult or expensive to reach after installation, such as, but not limited to, tracking devices on shipping containers that can move globally, (ii) a manufacturer or service provider may prefer for the module to be hermetically sealed for business or technical reasons, including the physical UICC may not be easily tampered with, and (iii) a module (such as a tracking device on a 40 foot shipping container) may move between several different countries, and the lowest costs for Internet or data connectivity through the wireless WAN may be through utilizing different UICC cards from different operators, but the cost of swapping the UICC card could be prohibitive.

Other needs for changing a preferred network or network credentials without physically changing a UICC exist as well. These needs have been one motivation for the industry, including ETSI and 3GPP standards bodies, to consider an embedded UICC, also known as an "eUICC". With an eUICC, the operation of an UICC can be essentially "virtualized", such that the data and algorithms within a UICC can be processed in software and distributed through electronic media (such as, but not limited to, a file transfer or file download). Exemplary benefits and technical considerations for using an eUICC in M2M applications as of November 2013 is outlined in ETSI TS 103 383 v12.1, entitled "Smart Cards; Embedded UICC; Requirements Specification," which is herein incorporated by reference in its entirety. Note that this published standard from June 2013, and the standard is primarily in the requirements definition phase, and many of the technical specifications for implementation and operation of an eUICC will be defined in the future.

Although the use of an embedded eUICC can solve many of the issues for distributing and managing physical media such as a UICC, many additional challenges remain. Many open and remaining challenges for a eUICC pertain to securely and electronically transferring a new set of MNO network access credentials (such as an IMSI and network key K) to a module in a secure and efficient manner. A need exists in the art for a module to securely obtain network access credentials. Another need exists in the art for the obtained credentials in a eUICC to be fully compatible with the significant installed and legacy base of networks that use a pre-shared secret key K, where the key K serves as the foundation for authentication and ciphering of data for a mobile phone or user equipment, including modules using conventional technology. A successful solution to these needs for M2M applications in the form of an eUICC can also provide a working solution of the needs for regular mobile phones as well, such that a consumer mobile phone or smartphone could implement and utilize an eUICC in order to eliminate the costs and complexity of dealing with a physical UICC.

A need exists in the art for module and a mobile network operator to securely share a pre-shared secret key K without depending on physical distribution of the key K or electronic distribution of the key K through 3rd parties, even in an encrypted form. A need exists in the art for the decryption of data within an eUICC profile to be under the control of the mobile network operator, because the mobile network operator may not control the distribution or release of profiles from an eUICC subscription manager to a module with an eUICC. As currently contemplated in November of 2013 by eUICC standards discussed above, a pre-shared secret key K and related network access credentials are transmitted to a module from an eUICC subscription manager. The pre-shared secret key K is also known as key K in 4G LTE and related networks and key Ki in 3G networks. The resulting security for the electronically transferred, pre-shared secret key K is no stronger than (i) the encryption on the channel used to transfer key K, and (ii) the security and chain of control for keys used to encrypt the communications channel transferring key K to a module or a mobile phone. A module and mobile network operator (MNO) using an electronically transferred key K for network access credentials is dependent on the communications channel for transferring key K, even though that communications channel may be outside the control of the MNO (such as at a time when key K is transferred using another MNO or a different network). Therefore, a need exists in the art for the MNO to securely and efficiently control the use of an electronically transferred key K within a profile for an eUICC, even though copying and distributing the profile may be outside the control of the MNO.

In addition, over an extended period of time such as several years, a mobile network operator could prefer for the key K to periodically rotate or change for an individual module or mobile phone in order to increase security. The continued and extended use of a single key K for all communications with a module or mobile phone can be a security risk, especially with a large volume of data transferred that could be subject to analysis for cryptographic weaknesses by potential attackers. Additionally, in the future a standard key length for key K may increase from today's current 128 bits to a longer key length such as an exemplary 256 bits. With conventional technology where key K is recorded in physical media such as a UICC, the only feasible way to change key K for a module or mobile phone is to physically distribute a new UICC card, with resulting costs and business complexities. A need exists in the art for a module, including a mobile phone, and a MNO to securely and efficiently support a change in network access credentials, including a key K for the module connecting to the MNO, without requiring a physical replacement of a UICC or equivalent physical media recording a key K.

And other needs exist in the art as well, as the list recited above is not meant to be exhaustive but rather illustrative.

SUMMARY

Methods and systems are provided for secure and efficient communication using a module to communicate with a server and a mobile operator network. The module can support "Machine to Machine" (M2M) communications, also known as "the Internet of things". The methods and systems contemplated herein can also support other applications as well, including mobile phone handsets connecting to a wireless network, where the wireless network can be associated with or the radio access portion of a mobile network operator. A module in the present invention can comprise a mobile phone such as a smartphone, and may also be referred to as a mobile device, mobile station, or user equipment. An objective of the invention is to address the challenges noted above for securing the deployment of modules that can utilize an embedded universal integrated circuit card (eUICC) and/or also PKI algorithms and keys.

The methods and systems contemplated herein can reduce the need for manual intervention with a module in order to automatically and remotely change network access credentials in order for the module to utilize new or different keys in order to connect and authenticate with a wireless network. By using an eUICC, where the eUICC can support both (i) the authentication of a user by the MNO, and (ii) the secure

decryption or derivation of the key K under control of the MNO, the value and usefulness of modules can be increased for a user and a mobile operator network. An eUICC can also comprise software and/or firmware components to "virtualize" the operation of a physical UICC, such that (i) the data normally recorded in a physical UICC can be recorded in a file with encryption, and (ii) the steps for using the data in the file can be processed by an eUICC.

In a first embodiment, a mobile network operator can process a set of data for inclusion in a profile for an eUICC. Data within the profile can be equivalent or similar to the data recorded in a physical UICC, including a set of network parameters, a module network identity, and a first key K. The mobile network operator can send the data for a profile to an eUICC subscription manager. A module can include an embedded universal integrated circuit card (eUICC). The eUICC can be processed by an operating system on the module and can be recorded in a nonvolatile memory, such that the eUICC is available after a powered off state. The eUICC can include data such as an eUICC identity, an eUICC profile key, and a symmetric ciphering algorithm. A manufacturer or distributor could record the data for the eUICC before the module is received by a user. The eUICC can communicate in the module with a network application. The network application can communicate with the mobile network operator using a wireless network and a radio within the module. The module can connect with a first network, send the eUICC identity and receive an encrypted profile, and the module can record the encrypted profile in a nonvolatile memory associated with the eUICC. The first network can be a network different than the wireless network for the profile, and the first network could comprise a WiFi network, a LAN connection using a USB interface to the module, or a public land mobile network.

Continuing with this first embodiment, the encrypted profile as received by the module can include a first portion of ciphertext and a second portion of ciphertext. The module using the eUICC can decrypt the first portion of ciphertext using the eUICC profile key and the symmetric ciphering algorithm. The resulting plaintext from the decrypted first portion of ciphertext can include the set of network parameters, the first network module identity, and the first key K. The module using the eUICC can select and activate the profile in order to connect with the wireless network associated with the mobile network operator. The module can conduct a first authentication with the mobile network operator using the first network module identity and the first key K. The module can send an attach request message, including an exemplary radio resource request message with the first network module identity, and the module can receive a random number in the form of a first RAND value.

Continuing with this first embodiment, the module can forward the RAND to the eUICC with the activated profile. The eUICC can input the first RAND and the first key K into a cryptographic algorithm in order to output a response RES value. The eUICC can return the RES value to the module, and the module could forward the RES to the wireless network. The wireless network can compare the received RES with a stored, expected RES (previously calculated using the same first RAND and first key K), and if the two RES values match then the module with the eUICC and profile can be authenticated by the network. The network and the module can take additional steps for the module to have at least limited access to an IP network. With access to the IP network for the module, a user associated with the module can conduct an authentication with the mobile network operator (whereas the mobile network operator may not have control over distribution of the profile with the network access credentials including the first key K up to this point).

Continuing with this first embodiment, the mobile network operator can authenticate or verify a user or M2M service provider associated with the module. The authentication or verification could comprise steps to verify a user, including the user entering information in a web page through the IP connection established with the network in the paragraph above using the first key K. Or the user could place a telephone call to a call center, and the user could verbally confirm identification information or enter DTMF digits. Or, the MNO could authenticate or verify the identity of a user associated with the module by a representative of the MNO visually viewing physical identification of the user such as a drivers license or a passport. If the module is associated with or operated by an M2M service provider, then the MNO could exchange data with the M2M service provider in order to confirm the module with the first key K is authenticated. In either case, where the module is associated with a user or an M2M service provider, the MNO could take steps to authenticate with a second factor, where authentication with the first factor comprised receiving the RES. After successful authentication with the second factor, the MNO can confirm the identity of an entity associated with the module, whereas that identity may not be known before the authentication with the second factor since the distribution of the eUICC profile may be outside the control of the mobile network operator.

Continuing with this first embodiment, after successful authentication with the second factor, the mobile network operator can send a symmetric key to the module. The symmetric key can be encrypted with a key ciphering algorithm. Or, the symmetric key can be (i) plaintext at the application layer, and (ii) encrypted at the data-link layer using the encryption between the module and wireless network after the first authentication above with the first key K. The module can receive the symmetric key (and decrypt the symmetric key if encrypted), and subsequently decrypt the second portion of ciphertext in the eUICC profile. The second portion of ciphertext can include a second network module identity and a second key K. The module can convert the second portion of ciphertext into plaintext using the symmetric ciphering algorithm and the received symmetric key. Note that the decryption of the second portion of ciphertext in the profile without the symmetric key is not feasible, and thus the mobile network operator can retain control over the use of the second key K in the profile for the eUICC, such as not releasing the symmetric key until after a user has successfully completed authentication with the mobile network operator as contemplated in the paragraph above.

After decrypting the second portion of ciphertext, the module with the eUICC can read a plaintext second network module identity and second key K. The second key K can be recorded in a protected, nonvolatile memory. The module can disconnect from the wireless network (where the first session used the first key K), and reconnect with the wireless network using the second network module identity and the second key K. The module with the eUICC can conduct a second authentication using the second key K, including sending the second network module identity, receiving a second RAND value, calculating a second RES value using the second RAND and the second key K, and sending the second RES value. After a successful second authentication, the module can access the IP network and the public Internet through the wireless network, and subsequent authentica-

tions with the wireless network can continue to use the second network module identity and the second key K. For embodiments where the module comprises a mobile phone and the user is an individual subscribing to mobile phone services from the mobile network operator, the user can be associated with a telephone number and place/receive phone calls after a successful second authentication.

In another embodiment, the eUICC profile key, associated with decrypting the profile from the eUICC subscription manager, may not be recorded in the eUICC before the eUICC sends an eUICC identity to the module, where the module sends the eUICC identity to the eUICC subscription manager through a first network. The eUICC can record an eUICC private key and the eUICC subscription manager could record an eUICC public key. The eUICC subscription manager can (i) encrypt the profile with the eUICC profile key, and then (ii) encrypt the eUICC profile key with an asymmetric ciphering algorithm and the eUICC public key, where the output is an encrypted eUICC profile key. The eUICC can receive the encrypted eUICC profile key from the eUICC subscription manager and decrypt the encrypted eUICC key using the asymmetric ciphering algorithm and the eUICC private key. After reading the plaintext eUICC profile key, the eUICC can decrypt the encrypted profile using the plaintext eUICC profile key, in order to read a plaintext first key K and first network module identity.

In an exemplary embodiment, the first key K is a null value for a profile recorded in the eUICC in a module. The use of a null value or the number zero for a shared secret key K is contemplated in wireless WAN standards and supported by commercial wireless networks in order to support emergency services for a module without a valid UICC. With a null value for the first key K, the MNO and wireless network can provide limited access to the IP network, such that a user of the module with a null or zero value for the first key K could perform steps to authenticate or verify the user with the MNO through the IP network accesses with the first key K as a null value. The data-link layer may not be effectively ciphered due to the use of a null value for the first key K, but the application or transport layer could secure communication from a web browser on the module to a web server for the user to authenticate with the MNO. The secure communication between the web browser and web server can utilize transport layer security (TLS) or similar standards for security at the transport or application layer, even though the data-link or network layer may not be encrypted. After successful authentication via the web browser, the MNO can take steps (discussed in other embodiments) allowing the module with the eUICC to access and use a second key K and a second network module identity for subsequent secured communication between the module and the MNO.

In another embodiment, the second key K can be derived using by both the mobile network operator and the module with the eUICC using a key derivation algorithm. The eUICC could include an eUICC key exchange algorithm and the mobile network operator could include a MNO key exchange algorithm, and the key exchange algorithms can include a key derivation algorithm that accepts input of a token value, a private key, and a public key for the other node. The mobile network operator and the module with the eUICC could communicate the token value used for the key derivation algorithm (including using the connectivity through the wireless network after using the first key K in the profile). The module can record an eUICC private key, and the MNO can have access to the eUICC public key. The key derivation algorithm in the eUICC key exchange algorithm can output a second key K using the token. The MNO can obtain the same value for the second key K. In this manner, both node can derive the same second key K without electronically transferring the second key K, even in encrypted form and thereby increasing the security of a systems with an eUICC.

In an exemplary embodiment can support a module changing a key K used to (i) authenticate with a wireless network and (i) cipher/decipher data with a wireless network. The module can change key K without requiring the manual exchange of a UICC or other physical intervention. The module can use an eUICC profile and change key K while using the same eUICC profile. The module, could also comprise a mobile phone such as, but not limited to, a smart phone. After connecting with a first network, which could comprise a first wireless WAN, wireless LAN, or wired connection, the module can receive a eUICC profile for an eUICC in the module, where the eUICC profile includes a first network module identity and a first key K. The first key K can be a standards-based key K used with wireless networks, and be equivalent to a pre-shared secret key K recorded in physical UICCs for LTE networks.

After authenticating with the wireless network using the first key K, the module and MNO can share a token. The module and MNO can mutually derive a second key K using the token and a key derivation algorithm. The module can disconnect from the wireless network after attaching using the first key K, and then reconnect using the second key K which has now been mutually derived by both the module and the mobile network operator. The module or MNO could determine or evaluate if the use of a new key K is required or preferred, and share a new token for input into the key derivation algorithms to derive a mutually shared new key K. In this manner, a module can change the key K used to authenticate and cipher/decipher data with a wireless network from a first key K to a second key K. This can increase flexibility of the system and reduce costs of physically distributing a new UICC to the module (or electronically sending new eUICC profiles) in order to change a key K.

These as well as other aspects and advantages will become apparent to those of ordinary skill in the art by reading the following detailed description, with reference where appropriate to the accompanying drawings.

BRIEF DESCRIPTION OF THE DRAWINGS

Various exemplary embodiments are described herein with reference to the following drawings, wherein like numerals denote like entities.

FIG. **1***a* is a graphical illustration of an exemplary system that includes a module and a mobile network operator, in accordance with exemplary embodiments;

FIG. **1***b* is a graphical illustration of hardware, firmware, and software components for a module, in accordance with exemplary embodiments;

FIG. **1***c* is a graphical illustration of components within a module, in accordance with exemplary embodiments;

FIG. **1***d* is a graphical illustration for authenticating with a wireless network using a physical UICC, in accordance with conventional technology;

FIG. **1***e* is a graphical illustration for authenticating with a wireless network using an eUICC, in accordance with exemplary embodiments;

FIG. **1***f* is a graphical illustration of an exemplary system that includes a module, a mobile network operator, and an eUICC in accordance with exemplary embodiments;

FIG. **2***a* is a graphical illustration of an exemplary profile for an eUICC, including encrypted data, decryption steps, and decrypted data for the profile, in accordance with exemplary embodiments;

FIG. **2***b* is a graphical illustration for ciphering and deciphering a profile using a symmetric ciphering algorithm with input of a key, in accordance with exemplary embodiments;

FIG. **2***c* is a graphical illustration for ciphering and deciphering a key K using a symmetric ciphering algorithm with input of a key, in accordance with exemplary embodiments;

FIG. **2***d* is a graphical illustration of a public key and a private key for an eUICC, in accordance with exemplary embodiments;

FIG. **2***e* is a graphical illustration for ciphering and deciphering a key for an eUICC using an asymmetric ciphering algorithm using a PKI key pair, in accordance with exemplary embodiments;

FIG. **3** is a simplified message flow diagram illustrating an exemplary system with exemplary data sent and received by a module with an eUICC, in accordance with exemplary embodiments;

FIG. **4** is a flow chart illustrating exemplary steps for a module to use an eUICC and authenticate with a wireless network, in accordance with exemplary embodiments;

FIG. **5***a* is a graphical illustration of a public keys, private keys, and a key derivation algorithm, in accordance with exemplary embodiments;

FIG. **5***b* is a graphical illustration of deriving a second key K using public keys, private keys, and a key derivation algorithm, in accordance with exemplary embodiments;

FIG. **5***c* is a simplified message flow diagram illustrating an exemplary system with exemplary data sent and received by a module with an eUICC, in accordance with exemplary embodiments; and,

FIG. **6** is a flow chart illustrating exemplary steps for a module to use an eUICC and authenticate with a wireless network, in accordance with exemplary embodiments.

DETAILED DESCRIPTION OF EXEMPLARY EMBODIMENTS OF THE INVENTION

FIG. **1***a*

FIG. **1***a* is a graphical illustration of an exemplary system that includes a module and a mobile network operator, in accordance with exemplary embodiments. The system **100** includes a module **101** operating within a wireless network **102**. System **100** can also include a mobile network operator **104**, an IP Network **111**, and an eUICC subscription manager **109**. Mobile network operator (MNO) **104** can include a server **105**. For embodiments where the MNO **104** uses 4G LTE and LTE Advanced networks, server **105** could comprise a home subscriber server (HSS) and/or a mobility management entity (MME). Server **105** could be a server with related functionality as a HSS or MME for a MNO **104** that uses different wireless network standards than those based on 4G LTE. Although not illustrated in FIG. **1***a*, an eUICC subscription manager **109** may also include one or more servers **105**, such that a first server **105** could function as an HSS in 4G LTE and LTE Advanced networks and a second server **105** could function as a MME in 4G LTE and LTE Advanced networks.

System **100** is illustrated without specific packet transmissions between module **101** and mobile network operator **104** and eUICC subscription manager **109**. Examples of the communications and messages pertaining to the present invention will be illustrated in later Figures. As contemplated herein, machine-to-machine communications may comprise communication between a module **101** and a server **105**, such that data can be transferred between the two with minimal manual intervention, although manual intervention can be required to set up system **100** and any occasional manual maintenance required. As contemplated herein, machine-to-machine communications may also be referred to as "the Internet of things" (IoT). Also note that module **101** may comprise a wireless module, such that module **101** can communicate with wireless network **102** using a radio and an antenna. A wireless or a wired configuration for module **101** can be utilized in the present invention.

If module **101** operates as a wireless module, module **101** and wireless network **102** can communicate using a base station **103**. Module **101** and wireless network **102** can utilize a variety of wireless technologies to communicate, including WiFi, WiMax, a 2nd generation wireless wide area network (WAN) technology such as, but not limited to, General Packet Radio Services (GPRS) or Enhanced Data rates for GSM Evolution (EDGE), 3rd Generation Partnership Project (3GPP) technology such as, but not limited to, 3G, 4G LTE, or 4G LTE Advanced, and other examples exist as well including wireless networks based on WiMAX standards. A wired module **101** can connect to the IP Network **111** via a wired connection such as, but not limited to, an Ethernet, a fiber optic, or a Universal Serial Bus (USB) connection (not shown).

Generally, the communication techniques described herein can be independent of the network technologies utilized at the physical and data-link layers, so long as the underlying network provides access to the IP Network **111** and supports Internet Protocols (IP). The IP Network **111** can be an IPv4 or an IPv6 packet-switched based network that utilizes standards derived from the Internet Engineering Task Force, such as, but not limited to, RFC 786 (User Datagram Protocol), RFC 793 (Transmission Control Protocol), and related protocols. The IP Network **111** can be the public Internet comprising globally routable IP addresses, or a private network that utilizes private IP addresses. IP Network **111** as illustrated in FIG. **1***a* could comprise the globally routable public Internet, or IP Network **111** could also be a private Internet that is (i) not globally routable and (ii) only accessible to authorized modules and servers. As one example of a private IP Network **111**, IP Network **111** could use private IP addresses for nodes on the network, and in this case IP Network **107** could be referred to as an intranet or private network. Alternatively, IP Network **111** could be a private network layered on top of the publicly routable Internet via secured and encrypted connections. The specific numbers for IP addresses and port numbers shown in FIG. **1***a* and other figures are illustrative and any valid IP address or port number can be used, including an IPv4 and an IPv6 address. Server **105** within mobile network operator **104** can communicate with the module **101** using IP network **111**, where IP network **111** can comprise a private network that utilizes Internet Protocol standards. Module **101** can access the public Internet after authenticating with the server **105** associated with the MNO **104**.

When operating in a wireless network configuration, module **101** can access the IP Network **111** via the wireless network **102**. In the wireless network configuration, module **101** can be a wireless handset, a cellular phone, a smartphone, a tablet computer, a laptop, a computer with a radio, a tracking device, or a circuit board with a radio that accesses wireless network **102**. Examples of wireless mod-

ules that utilize a wireless WAN such as, but not limited to, 2G and 3G networking technologies include the Motorola® G24-1 and Huawei® MC323. Example manufacturers of wireless modules in 2012 include Sierra Wireless® and Telit®. Example leading manufacturers of mobile phones in 2013 include Apple® and Samsung®. In a wired configuration (not shown), module **101** can be a computer, security camera, security monitoring device, networked controller, etc. Module **101** can include a module identity **110**, which can comprise a serial number or identity code in order to identify an individual, specific module **101** among a plurality of modules **101**. A more detailed depiction of exemplary components of a module **101** is included in FIG. **1***b* and FIG. **1***c* below. Module **101** could also operate as a "smartcard" such that an end user presents module **101** to merchants for payments.

Wireless network **102** may comprise either a wireless local area network (LAN) or a wireless WAN such as a public land mobile network (PLMN). Examples for technologies used in wireless LANs include an 802.11 WLAN, Bluetooth, or Zigbee among other possibilities. Module **101** operating in wireless mode could communicate with a base station **103** of a wireless network **102** using a radio and an antenna. Wireless network **102** could operate as a Mode II device according to FCC Memorandum Opinion and Order (FC-12-36) and related white space regulation documents. If module **101** supports IEEE 802.15.4, then wireless network **102** could be a Zigbee network, an ISA100.11a standards-based network, or a 6LoWPAN network as described by IETF RFC 4944. Other possibilities exist as well for the wireless technology utilized by a wireless network **102** and module **101**, operating in a wireless mode, without departing from the scope of the present invention.

System **100** can include an eUICC subscription manager **109**, where an eUICC subscription manager **109** can manage the recording and secure distribution of eUICC profiles **107***c* to a module **101**. Example entities that could operate or control an eUICC subscription manager **109** include a manufacturer of module **101**, an M2M service provider that manages the operation of module **101**, or possibly a mobile network operator **104** could operate the eUICC subscription manager **109**. Other entities could operate as an eUICC subscription manager **109** as well. An exemplary eUICC subscription manager **109** is described in ETSI TS 103 383 v12.1, entitled "Smart Cards; Embedded UICC; Requirements Specification," which is herein incorporated by reference in its entirety. An eUICC subscription manager **109** can also use a server **105** and record private keys and public keys for the server/subscription manager operation (including exemplary keys depicted and described in connection with FIG. **2***d* below).

In exemplary embodiments, eUICC subscription manager **109** can use an eUICC profile key **107***b* to cipher portions of an eUICC profile **107***c*, such that only module **101** with the same eUICC profile key **107***b* could reasonably decipher the portions of the eUICC profile **107***c*. In this manner, the eUICC profile **107***c* can remain reasonably secured. The eUICC subscription manager **109** can share the eUICC profile key **107***b* in several different ways, including (i) pre-sharing the eUICC profile key **107***b*, or (ii) the eUICC subscription manager **109** sending the eUICC profile key **107***b* to the eUICC **107** using an asymmetric ciphering algorithm **219** as depicted and described in connection with FIG. **2***e* below. An eUICC profile **107***c* can include an eUICC profile identity **107***e* in order to identify a profile among a plurality of eUICC profiles **107***c*. An eUICC subscription manager **109** can include an address **109***a*. The address **109***a* could comprise a domain name, such that a domain name system (DNS) or secure DNS (DNSSEC) query could resolve the name into an IP address in order for module **101** to communicate with the eUICC subscription manager **109**. Or the address **109***a* could comprise an Internet Protocol (IP) address, and the address **109***a* could include or be associated with a port number, such as port number **443** for data that utilizes transport layer security.

An eUICC **107** within module **101** can comprise an embedded universal integrated circuit card (eUICC) **107**. An eUICC **107** can provide the equivalent functionality as a physical UICC, where definitions for a physical UICC are included in ETSI TR 102 216 and ETSI TS 102 221 V11.0.0, and other examples for the use of a physical UICC in mobile phones and M2M modules exist as well. An eUICC **107** in FIG. **1***a* can support exemplary requirements for an eUICC outlined in ETSI TS 103 383 v12.1, entitled "Smart Cards; Embedded UICC; Requirements Specification," which is herein incorporated by reference in its entirety. In other words, an eUICC **107** can operate as a "virtualized" UICC, such that data operations and input/output to a physical UICC can be provided by an eUICC **107**. Exemplary details of a conventional, physical UICC for authenticating a module **101** (which can be "virtualized in an eUICC **107**) are depicted and described in connection with FIG. **1***d* below. An eUICC **107** can include an eUICC identity **107***a*, such that an eUICC subscription manager **109** can select and identify the eUICC **107** among a plurality of eUICCs **107**. The eUICC **107** can also record an eUICC profile key **107***b* and an eUICC profile **107***d*. Profile **107***d* can represent a profile that is partially decrypted using the eUICC profile key **107***b*, as depicted and described in connection with FIG. **2***a* below. Additional exemplary details for the operation of an eUICC **107** within module **101** are also provided in FIG. **1***b*, FIG. **1***c*, FIG. **1***e*, and FIG. **1***f* below.

According to an exemplary embodiment, an eUICC **107** can be recorded and operate within a "eUICC supporting" physical universal integrated circuit card (UICC) **108** within module **101**. This "eUICC supporting", physical UICC **108** can include a processing unit, RAM memory, ROM memory, EEPROM memory, a bus, and a physical interface (not shown in FIG. **1***a*, but described in FIG. **1***b*). An exemplary processing unit, RAM memory, ROM memory, EEPROM memory, and bus are depicted and described in connection with FIG. **1***b* below. The physical interface for an UICC **108** is depicted and described in connection with FIG. **1***d* below. The "eUICC supporting" physically UICC **108** can perform all of the functions of an eUICC **107**, including (i) receiving and recording profiles **107***d*, (ii) receiving and recording eUICC profile keys **107***b*, (iii) recording an eUICC identity **107***e*, (iv) decrypting an eUICC profile **107***c* into an eUICC profile **107***d* as depicted and described in connection with FIG. **2***a* below, (v) recording a set of network parameters **201** (in FIG. **2***a* below) for module **101** to connect with wireless network **102**, and (vi) recording keys such as a key K for conducting a message digest authentication with wireless network as depicted and described in FIG. **1***d*, FIG. **1***e*, and FIG. **3** below. An "eUICC supporting" physical UICC **108** can include a physical electrical interface of ISO/IEC 7816-3 in order to support existing physical slots for UICCs. The use of an "eUICC supporting" physical UICC **108** is optional, and can be omitted. In this case (where "eUICC supporting" physical UICC **108** is omitted), the eUICC **107** can operate as a program within module **101** as depicted and described in

connection with FIG. **1***b* below, and the eUICC **107** would not reside within the "eUICC supporting" physical UICC **108**.

The physical form-factor for an "eUICC supporting" UICC **108** could be identical to a UICC, and a difference between the two may not even be apparent upon visual inspection without special markings on the card. The physical form-factor for an "eUICC supporting" UICC **108** could comprise a "micro-SIM" or a "nano-SIM" as defined in ETSI TS 102 221 V11.0.0, which is herein incorporated by reference. When the module **101** detects a "eUICC supporting" UICC **107**, the module **101** could send received eUICC profiles **107***c* to the "eUICC supporting" UICC **107**, and also select, deselect, activate, and deactivate the different received eUICC profiles **107***d* recorded in the "eUICC supporting" UICC **108**. When a module **101** detects that a regular UICC (i.e. not an "eUICC supporting" UICC **108**) has been loaded into a slot for UICCs within the module, the module **101** could access the UICC in a regular manner implemented by mobile phones and modules for connecting to existing wireless networks in 2013, such as LTE or 3G networks. This use of conventional technology for a physical UICC is depicted and described in connection with FIG. **1***d* below.

A module **101** can be associated with a user **113** or an M2M service provider **115**. A user **113** could be a subscriber to mobile phone services provided by the mobile network operator **104**. In this case, the user could be an individual and the module **101** could comprise a mobile phone with a telephone number, an email client, and a web browser (in addition to other, standard functionality for a mobile phone). The user **113** could periodically charge the module **101** (which can comprise a mobile phone), such as typically at night and carry the module **101** during the day in order to place calls and send/receive data. Thus, the user **113** may typically be physically close to a mobile phone as module **101**, but an M2M service provider **115** can be associated with module **101** but may not be physically close to module **101**. For embodiments where module **101** is associated with M2M communications, such as including a sensor to collect data regarding a monitored unit, the module **101** can be associated with an M2M service provider **115**. In this case, the M2M service provider **115** can be a company or a division or department within a larger company that is associated with a plurality of modules **101** for collecting data using sensors and sending the data to a server similar to server **105**. The M2M service provider **115** may operate the server similar to server **105** in order to automatically collect data from the plurality of modules **101**. The server for the M2M service provider **115** could communicate with module **101** using the IP network **111** and the wireless network **102** when module **101** is connected to the wireless network **102**.

Other configurations besides the one illustrated in FIG. **1***a* are possible as well. In many common commercial relationships for the operation of mobile phone service in the United States in 2013, wireless network **102** could represent a portion of the radio access network used by a mobile network operator **104**. MNO **104** could outsource portions of the operation and maintenance of a radio access network, such as a wireless network **102**, to 3rd parties. In this configuration, wireless network **102** could represent a network operated by a first company specializing in the operation of radio towers and BTS equipment. This first company could be contracted with the mobile network operator **104** in order to support mobile phone service or data services to modules **101**.

In addition, server **105** could reside within wireless network **102** in a data center managed by wireless network **102**. Wireless network **102** could also operate as an eUICC subscription manager **109**. Although a single module **101**, server **105**, wireless network **102**, and mobile network operator **104** are illustrated in FIG. **1***a*, system **100** could comprise a plurality of each of these elements. Module **101** could also record sensor data pertaining to a monitored unit (not shown). Module **101** could be mobile, such as physically attached to a truck or a pallet, and module **101** could connect to a series of different wireless networks **102** or base stations **103** as module **101** moves geographically. Other configurations are possible as well for the elements illustrated in FIG. **1***a* without departing from the scope of the present invention.

FIG. **1***b*

FIG. **1***b* is a graphical illustration of hardware, firmware, and software components for a module, in accordance with exemplary embodiments. FIG. **1***b* is illustrated to include many components that can be common within a module **101**, and module **101** may also operate in a wireless configuration in order to connect with a wireless network **102**. In a wireless configuration, the physical interface **101***a* of module **101** may support radio-frequency (RF) communications with networks including a wireless network **102** via standards such as, but not limited to, GSM, UMTS, mobile WiMax, CDMA, LTE, LTE Advanced, and/or other mobile-network technologies. In a wireless configuration, the physical interface **101***a* may also provide connectivity to local networks such as, but not limited to, 802.11 WLAN, Bluetooth, or Zigbee among other possibilities. In a wireless configuration, module **101** could use a physical interface **101***a* be connected with both a wireless WAN and wireless LAN simultaneously. In a wired configuration, the physical interface **101***a* can provide connectivity to a wired network such as, but not limited to, through an Ethernet connection or USB connection. As contemplated herein, a physical interface **101***a* can include a network interface (such as a radio or an Ethernet port), such that module **101** can use the network interface in order to connect with a network and communicate with the network. A network interface can also comprise a physical interface **101***a* as contemplated herein.

The physical interface **101***a* can include associated hardware to provide the connections such as, but not limited to, radio-frequency (RF) chipsets, a power amplifier, an antenna, cable connectors, etc., and additional exemplary details regarding these components are described below in FIG. **1***c*. Device driver **101***g* can communicate with the physical interfaces **101***a*, providing hardware access to higher-level functions on module **101**. Device drivers **101***g* may also be embedded into hardware or combined with the physical interfaces **101***a*. Module **101** may preferably include an operating system **101***h* to manage device drivers **101***g* and hardware resources within module **101**. The operating systems described herein can also manage other resources such as, but not limited to, memory and may support multiple software programs operating on module **101** at the same time.

The operating system **101***h* can include Internet protocol stacks such as, but not limited to, a User Datagram Protocol (UDP) stack, Transmission Control Protocol (TCP) stack, a domain name system (DNS) stack, etc., and the operating system **101***h* may include timers and schedulers for managing the access of software to hardware resources. The operating system shown of **101***h* can be appropriate for a low-power device with limited memory and CPU resources (compared to a server **105**). An example operating system

101*h* for module **101** includes Linux, Android® from Google®, Windows® Mobile, or Open AT® from Sierra Wireless®. Additional example operating systems **101***h* for module **101** include eCos, uC/OS, LiteOs, and Contiki, and other possibilities exist as well without departing from the scope of the present invention.

A module program **101***i* may be an application programmed in a language such as, but not limited to, C, C++, Java, and/or Python, and could provide functionality to support regular mobile phone functionality. The module program **101***i* could include a network application **101***x*, where network application **101***x* comprises the user equipment protocol for accessing and communicating with the wireless network **102**. For embodiments where module **101** connects with a wireless network **102** comprising an LTE network, the network application **101***x* can receive, process, and send signals with the wireless network **102** for user equipment messages in ETSI TS 136 331 v.10.7 entitled "LTE; Evolved Universal Terrestrial Radio Access (E-UTRA); Radio Resource Control (RRC); Protocol Specification", which is herein incorporated by reference. In other words, network application **101***x* can comprise software for accessing and communicating with the wireless network **102**. Although network application **101***x* is depicted in FIG. **1***b* as operating as software within RAM memory **101***e*, the network application **101***x* could be included in firmware or a processor or application associated with a radio **101***z* (described in FIG. **1***c*). Exemplary messages sent and received by a network application **101***x* are also depicted and described in connection with FIG. **3** below.

A module program **101***i* could also include software for M2M applications such as, but not limited to, remote monitoring of sensors and remote activation of actuators. Module program **101***i* could also include a software routine, subroutine, linked library, or software module, according to one preferred embodiment. As contemplated herein, a module program **101***i* can include an application operating within a smartphone, such as, but not limited to, an iPhone® or Android®-based smartphone, and in this case module **101** could comprise a smartphone. The application functioning as a module program **101***i* could be downloaded from an "app store" associated with the smartphone. A set of device drivers **101***g* could include an eUICC driver **129**, such that a network application **101***x* or other software or firmware within module **101** communicating with the eUICC **107** could send and receive data with the eUICC driver **129**. Additional details regarding an exemplary eUICC driver **129** are depicted and described in connection with FIG. **1***e* below.

Many of the logical steps for operation of module **101** or eUICC **107** can be performed in software and hardware by various combinations of physical interface **101***a*, device driver **101***g*, operating system **101***h*, and a module program **101***i*. As depicted in FIG. **1***b*, module program **101***i* can include an eUICC **107** and a network application **101***x*. When module **101** or eUICC **107** is described herein as performing various actions such as acquiring an IP address, connecting to the wireless network, monitoring a port, transmitting a packet, sending a message, receiving a response, or encrypting or signing data, specifying herein that module **101** or eUICC **107** performs an action can refer to software, hardware, and/or firmware operating within module **101** illustrated in FIG. **1***b* or FIG. **1***c* performing the action.

Note that module **101** may also optionally include user interface **101***j* which may include one or more devices for receiving inputs and/or one or more devices for conveying outputs. User interfaces are known in the art and thus user interfaces are not described in detail here. User interface **101***j* could comprise a touch screen if module **101** operates as a smartphone or mobile phone. For embodiments where module **101** comprises a module for M2M applications and is associated with an M2M service provider **115**, then module **101** can optionally omit a user interface **101***j*, since no local user **113** input may be required for many M2M applications, although a user interface **101***j* could be included with module **101**. For embodiments where module **101** comprises a mobile phone and is associated with a user **113**, the user interface **101***j* could comprise a touch screen on the front of a mobile phone.

Module **101** may be a computing device that includes computer components for the purposes of collecting data from a sensor **101***f* or triggering an action by an actuator **101***y*. Module **101** may include a central processing unit (CPU) **101***b*, a random access memory (RAM) **101***e*, and a system bus **101***d* that couples various system components including the random access memory **101***e* to the processing unit **101***b*. The system bus **101***d* may be any of several types of bus structures including a memory bus or memory controller, a peripheral bus, and a local bus using any of a variety of bus architectures including a data bus. Note that the computer components illustrated for the module **101** in FIG. **1***b* may be selected in order to minimize power consumption and thereby maximize battery life, if module **101** includes a battery and is not attached to external power. In addition, the computer components illustrated for the module **101** in FIG. **1***b* may also be selected in order to optimize the system for both long periods of sleep or idle states relative to active communications and also may be optimized for predominantly uplink (i.e. device to network) communications with small packets or messages. The computer components illustrated for the module **101** in FIG. **1***b* may also be general-purpose computing components, and specialized components may not be required in order to utilize many of the embodiments contemplated herein.

Module **101** may include a read-only memory (ROM) **101***c* which can contain a boot loader program. Although ROM **101***c* is illustrated as "read-only memory", ROM **101***c* could comprise long-term memory storage chipsets or physical units that are designed for writing once and reading many times. As contemplated within the present invention, a read-only address could comprise a ROM **101***c* memory address or another hardware address for read-only operations accessible via bus **101***d*. Changing data recorded in a ROM **101***c* can require a technician have physical access to module **101**, such as, but not limited to, removing a cover or part of an enclosure, where the technician can subsequently connect equipment to a circuit board in module **101**, including replacing ROM **101***c*. ROM **101***c* could also comprise a nonvolatile memory, such that data is stored within ROM **101***c* even if no electrical power is provided to ROM **101***c*. Although not illustrated in FIG. **1***b*, but illustrated in FIG. **1***c* below, module **101** could also include a flash memory **101***w*. Module program **101***i*, network application **101***x*, operating system **101***h*, eUICC **107**, or device drivers **101***g* could be stored in flash memory **101***w* within module **101** when the module is powered off. These components and/or instructions could be moved from a flash memory **101***w* (not shown in FIG. **1***b* but shown in FIG. **1***c*) into RAM **101***e* when the module is powered on by a bootloader program recorded in the ROM **101***c*. Note that ROM **101***c* could be optionally omitted or included in a memory unit within CPU **101***b* (not shown).

Although the exemplary environment described herein employs ROM **101***c* and RAM **101***e*, it should be appreciated by those skilled in the art that other types of computer readable media which can store data that is accessible by a module **101**, such as, but not limited to, memory cards, subscriber identity module (SIM) cards, local miniaturized hard disks, and the like, may also be used in the exemplary operating environment without departing from the scope of the invention. The memory and associated hardware illustrated in FIG. **1***b* provide nonvolatile storage of computer-executable instructions, data structures, program modules, module program **101***i*, and other data for computer or module **101**. Note the module **101** may include a physical data connection at the physical interface **101***a* such as, but not limited to, a miniaturized universal serial bus adapter **101***v* (illustrated in FIG. **1***c*), firewire, optical, or other another port.

The computer executable instructions such as, but not limited to, module program **101***i*, network application **101***x*, eUICC **107**, operating system **101***h*, or device driver **101***g* can be initially loaded into memory such as, but not limited to, ROM **101***c* or RAM **101***e* through the physical interface **101***a* before module **101** is given to an end user, shipped by a manufacturer to a distribution channel, or installed by a technician. In addition, the computer executable instructions such as, but not limited to, module program **101***i*, network application **101***x*, operating system **101***h* or device driver **101***g* could be transferred wirelessly to module **101**. In either case (wired or wireless transfer of computer executable instructions), the computer executable instructions such as module program **101***i*, network application **101***x*, operating system **101***h*, or device driver **101***g* could be stored remotely on a disk drive, solid state drive, or optical disk (external drives not shown).

A number of program modules may be stored in RAM **101***e*, ROM **101***c*, or possibly within CPU **101***b*, including an operating system **101***h*, device driver **101***g*, an http client (not shown), a DNS client, and related software. Further, the module program **101***i* and/or network application **101***x* can perform the various actions described in the present invention for the module **101** through instructions the module program **101***i* and/or network application **101***x* provide to the CPU **101***b*. A user may enter commands and information into module **101** through an optional user interface **101***j*, such as a keypad, keyboard (possibly miniaturized for a mobile phone form-factor), and a pointing device. Pointing devices may include a trackball, an electronic pen, or a touch screen.

The module **101**, comprising a computer, may operate in a networked environment using logical connections to one or more remote computers, such as the server **105** illustrated in FIG. **1***a*. Server **105** can also function as a general purpose server to provide files, programs, disk storage, remote memory, and other resources to module **101** usually through a networked connection. Additional remote computers with which module **101** communicates may include another module **101** or mobile device, an M2M node within a capillary network, a personal computer, other servers, a client, a router, a network PC, a peer device, a base station **103**, or other common network node. It will be appreciated that the network connections shown throughout the present invention are exemplary and other means of establishing a wireless or wired communications link may be used between mobile devices, computers, servers, corresponding nodes, and similar computers. Although a single module program **101***i* is depicted in FIG. **1***b*, module **101** could include a plurality of module programs **101***i*.

The module program **101***i*, eUICC **107**, and network application **101***x* operating within module **101** illustrated in FIG. **1***b* can provide computer executable instructions to hardware such as CPU **101***b* through a system bus **101***d* in order for a module **101** to (i) connect with a wireless network **102**, (ii) authenticate with a mobile network operator **104** associated with the wireless network **102**, and (iii) send or receive packets with a server **105** or a server associated with an eUICC subscription manager **109**. The module program **101***i* and/or network application **101***x* can enable the module **101** or eUICC **107** to transmit or send data from the eUICC **107** or module **101**. The eUICC **107** or module **101** can send data by recording data in memory such as RAM **101***e*, where the data can include cryptographic data such as a RAND and RES values, a destination IP:port number, a packet or packet header value, an encryption or ciphering algorithm and key, a digital signature algorithm and key, etc. The data recorded in RAM **101***e* can be subsequently read by the operating system **101***h* or the device driver **101***g*. The operating system **101***h* or the device driver **101***g* can write the data to a physical interface **101***a* using a system bus **101***d* in order to use a physical interface **101***a* to send data to the wireless network **102** and IP network **111** using a radio **101***z* (shown in FIG. **1***c*). Alternatively, the module program **101***i* and/or network application **101***x* can write the data directly to the physical interface **101***a* using the system bus **101***d*.

The module program **101***i*, eUICC **107**, network application **101***x*, and/or operating system **101***h* can include steps to process the data recorded in memory such as, but not limited to, encrypting data, selecting a destination address, or decrypting ciphertext data. The data recorded in memory could also include an eUICC profile **107***c* or eUICC profile **107***d*, as described in FIG. **1***a* above and FIG. **2***a* below. The eUICC profiles **107***d* can include instructions and data for connecting with wireless network **102**, including network parameters and network access credentials. The module **101** can use the physical interface **101***a* such as, but not limited to, a radio to transmit or send the data associated with a profile **107***d* to a base station **103**. For those skilled in the art, other steps are possible as well for a module program **101***i* or operating system **101***h* to communicate with a wireless network **102** using data associated with an UICC (where an eUICC **107** records data normally associated with a physical UICC) without departing from the scope of the present invention.

Conversely, in order for module **101**, network application **101***x*, or eUICC **107** to receive a packet or message from MNO **104** or wireless network **102**, the physical interface **101***a* can use a radio to receive data from a base station **103**. The received data can include information from MNO **104** and may comprise a datagram, a source IP:port number, a packet or header value, an instruction for module **101**, an acknowledgement to a packet that module **101** sent, a digital signature, and/or encrypted data. The received data can also include radio resource control (RRC) messages, and related layer 1 and layer 2 access and control messages for module **101** to access the wireless network **102**. The operating system **101***h* or device driver **101***g* can use a system bus **101***d* and CPU **101***b* to record the received data in memory such as RAM **101***e*, and the module program **101***i* or operating system **101***h* may access the memory in order to process the received data and determine the next step for the module **101** after receiving the data. The steps within this paragraph may also describe the steps a module program **101***i*, eUICC **107**, or network application **101***x* can perform in order to receive a message from wireless network **102** that

includes a RAND value. For those skilled in the art, other steps are possible as well for a module program **101***i*, network application **101***x*, module **101**, and/or eUICC **107** to receive a message from a mobile network operator **104** or wireless network **102** within the scope of the present invention.

Module program **101***i* can include an eUICC **107**, which can provide the functionality or CPU **101***b* instructions for module **101** to access data normally within a physical UICC, such as network parameters and network access credentials. An eUICC **107** as illustrated in FIG. **1***a* and FIG. **1***b* can be implemented within module **101** in several different ways, including (i) as depicted in FIG. **1***b* a module program **101***i* stored in RAM **101***e* during operation, but also recorded in a nonvolatile memory, such as, but not limited to, either flash memory **101***w* (described in FIG. **1***c*) or ROM **101***c* at other times than normal operation (such as during periods of power off), (ii) firmware within CPU **101***b* or another specialized processing unit within module **101**, (iii) an "eUICC supporting" physical UICC **108** within module **101** that contains the eUICC **107**, or (iv) a specialized circuit within a surface mount package that is soldered directly onto a circuit board of the module **101**, including an 8-lead small outline non-leaded (SON-8) package. For the embodiment where an eUICC **107** comprises a module program **101***i*, the eUICC **107** could be loaded and installed within nonvolatile memory **101***w* in module **101** using the steps and procedures described for a module program **101***i* in FIG. **1***b*. Other possibilities exist as well for the physical implementation of an eUICC **107** within a module **101** without departing from the scope of the present invention. An eUICC **107** may also be referred to as an "electronic UICC", an "electronic SIM" (eSIM), or an "embedded SIM" (also eSIM).

For embodiments where an eUICC **107** can be loaded into a RAM **101***e* or flash **101***w* memory, a CPU **101***b* could designate the RAM **101***e* or flash **101***w* memory containing the instructions or data for an eUICC **107** to be a protected memory. When (i) loaded with appropriate data (such as, but not limited to a eUICC profile **107***d* described in FIG. **2***a* below), and (ii) a profile for a MNO **104** is selected and activated, then an eUICC **107** can provide the equivalent functionality of a physical UICC. The eUICC **107**, using an activated eUICC profile **107***d*, can provide the module **101** with (i) network access credentials **202** and **203**, and (ii) network parameters **201** in order to connect with wireless network **102**. The eUICC **107**, using an activated eUICC profile **107***d*, can record a first key K **203** (described in FIGS. **2***a* and **3** below) and also a first network module identity **202**. The eUICC **107** can support standard steps by module **101** for network authentication contemplated in 3GPP TS 33.401 V12.9.0 and related standards, including inputting a RAND value into the eUICC **107** and outputting a RES value.

Moreover, those skilled in the art will appreciate that the present invention may be implemented in other computer system configurations, including hand-held devices, netbooks, portable computers, multiprocessor systems, microprocessor based or programmable consumer electronics, network personal computers, minicomputers, mainframe computers, and the like. The invention may also be practiced in distributed computing environments, where tasks are performed by remote processing devices that are linked through a communications network. In a distributed computing environment, program modules may be located in both local and remote memory storage devices. In addition, the terms "mobile node", "mobile station", "mobile device", "M2M module", "M2M device", "networked sensor", "industrial controller", or "user equipment" can also refer to module **101** or its functional capabilities. Other possibilities exist as well for the configuration or combination of components illustrated in FIG. **1***b* without departing from the scope of the present invention.

FIG. **1***c*

FIG. **1***c* is a graphical illustration of components within a module, in accordance with exemplary embodiments. FIG. **1***c* is illustrated to show a combination of components useful for leveraging the efficient and secure communication techniques described in the present invention. In addition to the components illustrated in FIG. **1***b* above, module **101** can include a an eUICC **107**, a battery **101***k*, a MNO public key **502**, a wireless module private key **112***a*, a connection to an actuator **101***y*, a USB interface **101***v*, a CPU wake controller **101***u*, a flash memory **101***w*, a symmetric key **127**, a random number generator **128**, cryptographic algorithms **141**, a radio **101***z*, and other components illustrated in FIG. **1***c*. Not all of the components illustrated in FIG. **1***c* are required for many exemplary embodiments, and some of the components illustrated in FIG. **1***c* may also be optionally omitted in some exemplary embodiments.

The CPU **101***b* can comprise a general purpose processor appropriate for the low power consumption requirements of a module **101**, and may also function as a microcontroller. CPU **101***b* could be a processor with an ARM® core, or possibly an ATOM® core or processors, and other possibilities exist as well. The CPU **101***b* can include registers, a cache memory, and arithmetic logic units. Clock **160** can comprise a crystal oscillator generating sine or square wave outputs at a frequency to drive a system bus **101***d*, CPU **101***b*, and RAM **101***e*, in addition to other functionality. In exemplary embodiments, clock **160** can comprise a temperature-compensated crystal oscillator (TCXO), a voltage-controlled crystal oscillator (VCXO), or a voltage-controlled temperature-compensated crystal oscillator (VCTCXO), and other possibilities exist as well. Clock **160** could include circuits and logic to keep time while module **101** is both in an active state and a dormant state.

Sensor **101***f* could be a device to collect environmental data or data regarding (i) a monitored unit for M2M applications or (ii) user **113** for applications where module **101** comprises a mobile phone and user **113** is an individual person such as a mobile phone subscriber. Sensor **101***f* could collect data such as, but not limited to, temperature, humidity, pressure, visible light levels, radiation, shock and/or vibration, voltage, current, weight, pH levels, orientation/motion, or the presence of specific chemicals. Sensor **101***f* could also be a microphone. Sensor **101***f* could be a magnetic strip reader for credit cards and similar cards, or an antenna for either near-field RF communications, such as, but not limited to, reading an RF identity tag. An antenna for a sensor **101***f* could also collect longer-range RF signals, such as, but not limited to, reading long-range radio frequency identity tags. Sensor **101***f* could also collect biometric data such as, but not limited to, heart rate, glucose levels, body temperature, or other health measurements for a user **113**. The sensor **101***f* can provide data to the CPU **101***b* in the form of analog or digital data, which can be communicated via a system bus **101***d* or physical interface **101***a* and other electrical interfaces are possible as well. A sensor measurement can comprise the analog or digital data collected by CPU **101***b* from sensor **101***f*.

A sensor measurement from sensor **101***f* can include processing of the analog or digital data input CPU **101***b* by sensor **101***f*, such as, but not limited to, averaging over time, using mathematic formulas to convert the raw data from

sensor **101***f* into a usable form. Module **101** may also collect sensor data or sensor values using a sensor **101***f* and CPU **101***b*, where the data or values are derived from electrical signals output by a sensor **101***f*. A sensor measurement can comprise the sensor data or sensor values. If module **101** comprises a "point of presence" payment terminal, then a sensor measurement could comprise data read from a payment card. As contemplated herein, the terms "sensor measurement" and "sensor data" can be used interchangeably, and can also be considered functionally equivalent. Although a single sensor **101***f* is shown in FIG. **1***c*, a module **101** could include multiple sensors. Each of the multiple sensors **101***f* could include a sensor identity **151**, which could comprise a number or string to identify the sensor **101***f*. A sensor **101***f* could be external to module **101**, and also a plurality of sensors **101***f* may be used and they also can connect to module **101** when module **101** uses radio **101***z* as a base station for a WiFi network.

Actuator **101***y* could be a device to control a parameter or state for a monitored unit in M2M applications for module **101**, such as, but not limited to, changing a voltage or current, activating a switch or relay, turning on or off a microphone or speaker, activating or deactivating a light, and other examples are well known in the art. Actuator **101***y* could also be a speaker. Actuator **101***y* could be controlled by module **101** via a digital or analog output from CPU **101***b*, which could also be transmitted or sent via system bus **101***d* or a physical interface **101***a*. Although actuator **101***y* is illustrated as external to wireless module **101** in FIG. **1***c*, actuator **101***y* could also be internal to module **101**, and module **101** could include multiple actuators **101***y*. A module **101** could include multiple actuators **101***y* each with an actuator identity **152**. Sensors and actuators are well known to those of ordinary skill in the art, and thus are not described in additional detail herein.

Module **101** can include a Universal Serial Bus (USB) interface **101***v*. In accordance with an exemplary embodiment, module **101** can comprise a wireless module and include a radio **101***z*. Note that the use of a radio **101***z* is not required for module **101**, which could also obtain a connection to the IP Network **111** via a wired line such as Ethernet. Although not illustrated, radio **101***z* could include antennas for reception and transmission of RF signals, and even multiple antennas could be used. Although a single radio **101***z* is illustrated in module **101**, module **101** could also contain multiple radios **101***z*. Radio **101***z* can support wireless LAN standards such as, but not limited to, WiFi, Bluetooth, and Zigbee, or similar wireless LAN standards. Note that module **101** may also operate as a base station in a wireless LAN, such as, but not limited to, an 802.11 base station. When module **101** operates a wireless LAN, radio **101***z* can function as either a client/node and/or a base station **103** to support communication from other wireless nodes in physical proximity, such as, but not limited to, other nodes within an exemplary 50 meters. The other wireless nodes could comprise a sensor **101***f* and/or actuator **101***y*, and in this case a sensor could be referred to as a "networked sensor" and an actuator could be referred to as a "networked actuator".

In accordance with exemplary embodiments, module **101** can store module private key **112***a*, MNO public key **502**, and module identity **110**, and a symmetric key **127** in memory/RAM **101***e* during operation, such as when CPU **101***b* is active and the module **101** is connected to a network such as a wireless network **102** during data transmissions. Module private key **112***a* preferably is recorded in nonvolatile memory such as, but not limited to, flash memory **101***w*, so that module **101** has access to its private key **112***a* after the private key has been derived or loaded, including times when a battery **101***k* has been fully drained or removed from module **101** (if module **101** does not utilize a persistent power source such as land-line power). Symmetric key **127** can be a secure, shared private key for use with symmetric encryption or symmetric ciphering algorithms **211** (in FIG. **2***c* below). Symmetric key **127** may also include an expiration time **133**, such that symmetric key **127** may only be used by module **101** and/or eUICC **107** during a limited period of time, such symmetric key **127** remaining only valid for a day, or a week, or during a session (where the session comprises multiple messages and/or responses between a module **101** and a wireless network **102**), etc.

Module identity **110** is preferably a unique identifier of module **101**, and could comprise a number or string such as, but not limited to, a serial number, an international mobile subscriber identity number (IMSI), international mobile equipment identity (IMEI), or an Ethernet media access control (MAC) address. According to an exemplary embodiment, module identity **110** can also comprise a serial number or string that is written into hardware of module **101** upon manufacturing or distribution of module **101** (also depicted and described in connection with a step **511** in FIG. **5***b* below). In this case, module identity **110** could be recorded in a read only memory **101***c*, where read only memory **101***c* could not be easily erased or otherwise tampered with. Read only memory **101***c* could also comprise a protected memory and the address for accessing the module identity **101** within the ROM **101***c* could comprise a protected address.

A protected address can comprise an address accessible to a CPU **101***b* and readable by CPU **101***b* where the data within the protected address is not modified, changed, or updated by a CPU **101***b* under normal operating conditions. Also note that the protected address can comprise one form of a nonvolatile memory, where a memory records data. In exemplary embodiments module identity **110** may preferably be permanently or persistently associated with the physical hardware of module **101**, which can be helpful for the security procedures contemplated herein. Module identity **110** can function as a basic identifier for services from mobile network operator **104**, eUICC subscription manager **109**, wireless network **102**, M2M service provider **115**, or server **105** in order to properly identify module **101** among a plurality of modules. Module private key **112***a* and an associated module public key **112***b* could be unique to module **101** and uniquely associated with module identity **110**, according to a preferred embodiment.

MNO public key **502** in module **101** could be obtained from downloading the key over the IP Network **111**, or optionally also written into nonvolatile memory of module **101** upon manufacture or distribution. MNO public key **502** could be obtained using a domain name or Internet address that is recorded in nonvolatile memory upon the configuration of module **101**, such as, but not limited to, during installation or distribution, and module **101** could fetch the MNO public key **502** upon connecting to a wireless network **102** or other connection to the IP Network **111**. Additional elements besides those depicted in FIG. **1***c* could also be recorded in volatile memory **101***e*, which could comprise a RAM **101***e*. For example, cryptographic algorithms **141** could also be recorded in RAM **101***e* as well. Note that values and related data can also be recorded in both RAM **101***e* and nonvolatile memory **101***w* at the same time, such that data in nonvolatile memory **101***w* allows module **101** to access the data after a shutdown state, but moving the same data into RAM **101***e* during an active state allows module

101 to more quickly perform operations using a CPU 101*b*. Other possibilities exist as well for the storage location of various values and data elements illustrated in FIG. 1*c* without departing from the scope of the present invention.

Module 101 may also contain cryptographic algorithms 141, which may comprise a suite of algorithms or subroutines that can be utilized for (i) deriving a pair of keys comprising a public key and a private key, (ii) encrypting data using public keys, (iii) decrypting data using private keys, (iv) processing secure hash signatures using private keys, and (v) verifying secure hash signatures using public keys, and related software, firmware, or subroutines for implementing a cryptographic system, including symmetric ciphering algorithms. Cryptographic algorithms 141 could utilize publicly available software libraries within tools such as, but not limited to, OpenSSL maintained by The OpenSSL Project (http://www.openssl.org/), libgcrypt maintained by The Free Software Foundation (http://www.gnu.org/software/libgcrypt/), and similar libraries such as, but not limited to, libmcrypt and Crypto++. Note that cryptographic algorithms 141 could also use proprietary cryptographic libraries as well. In addition to implementing asymmetric encryption/ciphering, such as, but not limited to, used with RSA and ECC cryptography, cryptographic algorithms 141 can provide symmetric ciphering where a shared private key is utilized to both encrypt and decrypt, such as, but not limited to, with the Advanced Encryption Standard (AES) cipher suite.

As illustrated in FIG. 1*c*, module 101 may also contain a random number generator 128. Random number generator 128 may contain a seed 128*b*. The creation of random numbers with a high degree of entropy may be important the use of cryptographic algorithms 141. A plurality of the data as a source for a random number seed 128*b* could be appended together into a "module random seed file" with a combined series or list of states (i.e. a plurality of sensor 101*f* measurements, radio 101*z* measurements, clock 160 times or values, memory 101*e* or memory 101*w* states, operating system 101*h* states, actuator 101*y* states, and/or hardware 101*a* or 101*d* states). Note that values or data for each of the elements listed in the previous sentence could be utilized in a "module random seed file" instead of or in addition to a state. The use of a "module random seed file" with a random number generator 128 is also depicted and described in connection with FIG. 1*d* of U.S. patent application Ser. No. 14/084,141, filed Nov. 19, 2013 in the name of John Nix, which is hereby incorporated by reference in its entirety.

FIG. 1*d*

FIG. 1*d* is a graphical illustration for authenticating with a wireless network using a physical UICC, in accordance with conventional technology. FIG. 1*d* illustrates the components and interfaces for using a physical UICC in order to a module 101 conduct an authentication with a wireless network 102 according to wireless WAN standards which use a pre-shared secret key K recorded in the physical UICC 116. The wireless network could be an LTE, LTE Advanced, or a 3G network, and also based on related standards. With a 3G network, the pre-shared secret key K is also known as "Ki". The module 101 can include a network application 101*x*, a UICC driver 114, and a physical interface supporting the ISO/IEC 7816-3 electrical standards, such as the third edition published on Nov. 1, 2006. The physical UICC 116 can be a smart card in the form factor of a mini-SIM, micro-SIM, or nano-SIM, connected to the physical interface such as ISO/IEC 7816-3 and related electrical standards. The physical interface can include six electrical contacts known as C1 through C6, where C1 provides a power supply to the physical UICC 116, C2 provides a reset signal input, C3 provides a clock signal input, etc. The network application 101*x* can comprise software or firmware for the module 101 to communicate with the wireless network 102 using the standards that include layer 2 messages between module 101 and wireless network 102 such as, but not limited to, radio resource control (RRC) messages, security mode commands, ciphering, and authentication. The network application 101*x* can communicate with a radio 101*z* (described in FIG. 1*c*) using the system bus 101*d*.

A network application 101*x* in a FIG. 1*d* can be similar or equivalent to a network application 101*x* depicted and described in connection with FIG. 1*b*. The UICC driver 114 can comprise a driver within a set of drivers 101*g* within module 101, where drivers 101*g* are also depicted and described in connection with FIG. 1*b*. A physical UICC 116 can support other and additional functionality for a module 101 than the authentication functionality depicted in FIG. 1*b*, such as, but not limited to, (i) recording a set of network parameters equivalent to a set of network parameters 201 in FIG. 2*a* below in order to module 101 to identify and select a wireless network 102, (ii) recording an address book with a list of phone numbers for user 113, (iii) recording a list of recent SMS messages and telephone numbers dialed, and/or (iv) recording and implementing a personal identification number (PIN) in order for a user 113 to authenticate and access the module 101 with the UICC 116, and other functionality of a physical UICC 116 is possible as well. The physical UICC 116 can also include (i) an IP Multimedia Services Identity Module (ISIM) application and data and/or a (ii) Universal Subscriber Identity Module (USIM) application for the module 101 to utilize when communicating with the wireless network 102.

After power-up of the module 101 from a powered off state, the module 101 can use the UICC driver 114 to read data from the physical UICC 116 such as a set of network parameters 203 (depicted in FIG. 2*a* below) as well as an IMSI or equivalent value as a network module identity. The set of network parameters 203 or IMSI in a physical UICC 116 may not be encrypted (or associated with an eUICC profile 107*d*) and the set of network parameters can be directly read by the UICC driver 114. The module 101 can use the set of network parameters to tune a radio 101*z* to particular frequencies for the wireless network 102 and search for a beacon signal from a base station 103. The beacon signal can include codes such as a mobile country code (MCC) and mobile network code (MNC) that can match values in either the network parameters or IMSI. Upon finding and selecting a base station 103, the module 101 can send a random access channel (RACH) message and subsequently an identity value recorded in the physical UICC 116 such as an IMSI, temporary mobile subscriber identity (TMSI), a globally unique temporary identity (GTUI), or a similar value to identify the module 101 using the physical UICC 116 with the wireless network 102.

In order to authenticate a module 101 with the wireless network 102, the wireless network 102 can record a set of authentication tokens or vectors associated with a network identity sent by the module 101, such as a GTUI value. An authentication vector 117 for the module's 101 network identity can comprise a vector or set of values that includes a random number (RAND) 118, response (RES) 119, a network authentication token (AUTN), and a sequence number. The value AUTN and sequence number is not shown in FIG. 1*d* and subsequent figures such as FIG. 1*e* and FIG. 3, but the value AUTN and sequence number can be used by

module **101** with a physical UICC **116** or eUICC **107** in order to authenticate the wireless network **102**. The sequence number can prevent replay attacks and the AUTN value can comprise a digital signature or message digest value the physical UICC **116** or eUICC **107** can also calculate using the RAND **118** value in order for the module **101** to authenticate the wireless network **102**. The values for the authentication vector **117** that includes a RAND **118** and a RES **119** can be calculated by a home subscriber server (HSS) for the mobile network operator **104** associated with the wireless network **102** and provided by the mobile network operator **104** to servers associated with the wireless network **102**. An exemplary format for the use of a RAND **118** with a response RES **119** is described in ETSI standard TR 131 900 v.10.0.0 and related documents. Other possibilities exist as well for the format, structure, and data elements within an authentication vector **117** without departing from the scope of the present invention.

In order to conduct an authentication of module **101**, after receiving a RACH message and the network module identity such as an IMSI, TMSI, or GTUI value, the wireless network **102** can send a RAND **118** from the authentication vector **117**. The module **101** can receive the RAND **118** value using the network application **101***x* and the radio **101***z*. The network application **101***x* can send the RAND **118** value to the UICC driver **114**, and the UICC driver **114** can send the RAND **118** value through the physical interface such as ISO/IEC 7816-3 to the physical UICC **116**. After receiving the exemplary RAND **118** message, in order to conduct an authentication, module **101** using a physical UICC **116** could take steps to demonstrate to a wireless network **102** that the physical UICC **106** records the same pre-shared secret key K for the network module identity as recorded by a mobile network operator **104** associated with the wireless network **102**. Physical UICC **116** can properly respond to the RAND **118** using message digest algorithms by calculating a secure hash value RES **119** using the RAND **118** and the recorded secret key K. The physical UICC **116** could use algorithms specified in ETSI TS 135 205-209, as well as subsequent and related standards, in order for the physical UICC **116** to calculate a secure hash value such as a RES **119**. The calculation and processing of a RES **119** using a RAND **118** and a secret key K is also depicted and described in connection with steps **306** and **311** of FIG. **3**. Other possibilities exist as well for a physical UICC **116** or an eUICC **107** to calculate a RES **119** value using a RAND **118** and a secret key K without departing from the scope of the present invention.

After the calculation of a RES **119** value in response to the RAND **118**, the physical UICC **116** can send the RES **119** to the UICC driver **114** through the physical interface such as ISO/IEC 7816-3. The device driver **114** can send the RES **119** value to the network application **101***x* and the network application **101***x* can send the RES **119** value to the wireless network **102** using a radio **101***z* and the base station **103**. The wireless network **102** can take steps to compare the received RES **119** with a recorded RES **119** value in the authentication vector **117**. If the received RES **119** matches the recorded RES **119** in the authentication vector **117** then the module **101** with the physical UICC **116** can be considered authenticated. The authentication of module **101** by wireless network **102** is also depicted and described in connection with a step **308***a* of FIG. **3**. After successful authentication, the module **101** and wireless network **102** can then take subsequent steps for a module **101** to have access to the IP network **111** including the public Internet, as well as configuring services such as voice and SMS.

FIG. **1***e*

FIG. **1***e* is a graphical illustration for authenticating with a wireless network using an eUICC, in accordance with exemplary embodiments. A module **101** with an eUICC **107** can perform the equivalent steps for authentication with a wireless network **102**, such that a module **101** can use an eUICC **107** instead of a physical UICC **116**. The wireless network **102** can perform the same steps as (i) recording an authentication vector **117** from a mobile network operator **104** associated with the wireless network **102**, (ii) receiving a RACH message and a network module identity such as a GTUI or TMSI from the module **101**, (iii) sending values from the authentication vector **117** including a RAND **118**, and (iv) receiving a RES **119** and comparing the received RES **119** with a recorded RES **119** in the authentication vector **117** in order to authenticate the module **101** using an eUICC **107** instead of a physical UICC **116**. In other words, the use of an eUICC **107** by module **101** can be transparent to a wireless network **102**, such that a module **101** with an eUICC **107** instead of a physical UICC **116** can be fully "backward compatible" with standards, software, and infrastructure deployed on a wireless network **102**.

A module **101** in FIG. **1***e* can include a network application **101***x*, an eUICC driver **129**, an eUICC **107**, and an operating system **101***h*. The network application **101***x* can be equivalent or similar to a network application **101***x* depicted and described in connection with FIG. **1***d* and FIG. **1***b* above. The use of an eUICC **107** instead of a physical UICC **116** within module **101** can also be transparent to network application **101***x*, via the use of eUICC driver **129**. In other words, in exemplary embodiments, the same or equivalent network application **101***x* can be used for either (i) a module **101** with a physical UICC **116** or (ii) a module **101** with an eUICC **107**, since the eUICC driver **129** can perform the identical input and output functions as a UICC driver **114** when communicating with the network application **101***x*. The use of an eUICC driver **129** is also depicted and described in connection with FIG. **1***b* above. The eUICC driver **129** can communicate with the network application **101***x* using the operating system **101***h*. The internal communication between network application **101***x* and eUICC driver **129** using an operating system **101***h* could comprise sharing memory **101***e*, such that network application **101***x* writes messages such as, but not limited to, an exemplary RAND **118** value into the shared memory **101***e* and eUICC driver **129** reads the values from the shared memory **101***e*. In another embodiment, the internal communication between network application **101***x* and eUICC driver **129** using an operating system **101***h* could comprise using loopback UDP ports within operating system **101***h*, such that network application **101***x* sends a UDP datagram with the RAND **118** value using a first UPD loopback port, and the eUICC driver **129** receives the UDP datagram with the RAND **118** value using a second UDP loopback port. Similar steps could be taken as well for an eUICC driver **129** to send data such as a RES **119** to the network application **101***x* using the operating system **101***h*.

As illustrated in FIG. **1***e*, eUICC driver **129** can also communicate with the eUICC **107** using the operating system **101***h*. Two differences between conventional technology illustrated in FIG. **1***d* and the exemplary embodiment illustrated in FIG. **1***e* include (i) the eUICC driver **129** communicates with the eUICC **107** using operating system **101***h* instead of a physical interface such as ISO/IEC 7816-3 and related electrical standards, and (ii) the eUICC **107** can operate as a separate program or application within memory **101***e* or memory **101***w* instead of a physically separate

application operating on a physical UICC **116**. The eUICC driver **129** can communicate with the eUICC **107** using the equivalent steps and procedures for an network application **101***x* to communicate with an eUICC driver **129** described in the paragraph above, including using shared memory or sending UDP loopback messages on internal UDP loopback ports. Other possibilities for the communication between eUICC driver **129** and eUICC **107** exist as well without departing from the scope of the present invention. In addition, although eUICC driver **129** and eUICC **107** are depicted in FIG. **1***e* and FIG. **1***b* as separate elements, programs, and/or processes for a module **101**, the eUICC driver **129** could be optionally combined with an eUICC **107** such that the network application **101***x* can communicate directly with the eUICC **107** using the operating system **101***h*.

The eUICC **107** can include an eUICC profile **107***d* which can contain the same information used by a physical UICC **116** in FIG. **1***d* above, including a set of network parameters, a network module identity, and a key K. In other words, the data recorded in a eUICC **107** in the form of a profile **107***d* can allow and support the eUICC **107** in FIG. **1***e* to operate in an equivalent manner as a physical UICC in FIG. **1***d* for the authentication steps illustrated in FIG. **1***d* and FIG. **1***e*. Although not illustrated in FIG. **1***e*, the eUICC **107** could also perform the similar or equivalent functions of a physical UICC including (i) recording a set of network parameters equivalent to a set of network parameters **201** in FIG. **2***a* below in order to module **101** to identify and select a wireless network **102**, (ii) recording an address book with a list of phone numbers for user **113**, (iii) recording a list of recent SMS messages and telephone numbers dialed, and/or (iv) recording and implementing a personal identification number (PIN) in order for a user **113** to authenticate and access the module **101** with the eUICC **107**. Other functionality of an eUICC **107** for a module **101** is possible as well without departing from the scope of the present invention.

As illustrated in FIG. **1***e*, the network application **101***x* in module **101** can receive a RAND **118** value from wireless network **102** in order to authenticate the module **101**. The network application **101***x* can send the RAND **118** value to the eUICC driver **129**. The eUICC **107** can read a RAND **118** value from the network application **101***x* using the eUICC driver **129**. After receiving the exemplary RAND **118** message, in order to conduct an authentication, module **101** using an eUICC **107** could take steps to demonstrate to a wireless network **102** that the module **101** records the same pre-shared secret key K for the network module identity as recorded by a mobile network operator **104** associated with the wireless network **102**. eUICC **107** can properly respond to the RAND **118** using message digest algorithms by calculating a secure hash value RES **119** using the RAND **118** and the recorded secret key K from the profile **107***d*. The eUICC **107** could use algorithms specified in ETSI TS 135 205-209, as well as subsequent and related standards, in order for the eUICC **107** to calculate a secure hash value such as a RES **119**. The calculation and processing of a RES **119** using a RAND **118** and a secret key K for an eUICC **107** is also depicted and described in connection with steps **306** and **311** of FIG. **3**. Other possibilities exist as well for an eUICC **107** to calculate a RES **119** value using a RAND **118** and a secret key K, without departing from the scope of the present invention. As illustrated in FIG. **1***e*, the eUICC **107** can send the RES **119** to the eUICC driver **129**, and the eUICC driver **129** can send the RES **119** to the network application **101***x*. The network application **101***x* can then send the RES **119** to the wireless network **102**, and the wireless network **102** could perform a step **308***a* as depicted and described in connection with FIG. **3** in order to authenticate the module **101** using the eUICC **107** and profile **107***d*.

FIG. **1***f*

FIG. **1***f* is a graphical illustration of an exemplary system that includes a module, a mobile network operator, and an eUICC in accordance with exemplary embodiments. System **199** in FIG. **1***f* can include a mobile network operator **104** and a module **101**. The mobile network operator **104** can communicate with the module **101** using a wireless network **102**, and the wireless network **102** could comprise the radio access portion of the mobile network operator **104**, such as a collection of base stations **103** using licensed radio spectrum such as, but not limited to, the 700 Mhz band for LTE, and other possibilities exist as well for the wireless network **102**. The mobile network operator **104** can include a server **105** with an IP address **106***a*. The server **105** with MNO **104** in FIG. **1***f* can comprise a Mobility Management Entity (MME) in LTE networks, or equivalent functionality to receive authentication requests from modules **101** with other wireless wide-area networking technology. The MME can support radio bearer activation/deactivation processes for the module **101** and authenticating the module **101** by recording an authentication vector **117**, where the authentication vector **117** can be received from an HSS.

The server **105** can comprise a server as depicted and described in connection with server **105** in FIG. **1***k* and FIG. **1***m* of U.S. patent application Ser. No. 14/084,141, filed Nov. 19, 2013 in the name of John Nix, which is hereby incorporated by reference in its entirety. The IP address **106***a* can include a subnet prefix **106***d* and an interface identifier **106***e*. The IP address **106***a* can comprise an IPv6 address, where the subnet prefix **106***d* comprises the first 64 bits of a 128 bit IPv6 address, and the interface identifier **106***e* can comprise the last 64 bits of a 128 bit IPv6 address as shown in FIG. **1***f*. Other nodes connected to the wireless network **102** can also include IPv6 addresses with different values for the subnet prefix **106***d* and the interface identifier **106***e*. A module **101** can include both a network application **101***x* and an eUICC **107**, where a network application **101***x* is depicted and described in connection with FIG. **1***b* and an eUICC **107** is depicted and described in connection with FIG. **1***a*, FIG. **1***b*, FIG. **1***c*, and FIG. **1***e*.

In an exemplary embodiment, different elements within module **101** can be associated with different IP addresses. The network application **101***x* can be associated with an IP address **106***b* and the eUICC **107** can be associated with an IP address **106***c*. The wireless network **102** could assign the module **101** the subnet prefix **106***d* used by module **101** with wireless network **102**, and an operating system **101***h* could assign the interface identifier **106***e* used by the network application **101***x* and the eUICC **107**. Other possibilities exist as well for the source of IP addresses in a system **199**, but an end result can comprise the eUICC **107** having a unique IPv6 address **106***c* such that a server **105** such as an MME can communicate with the eUICC **107** directly by sending a packet with a RAND **118** value from server **105** address **106***a* to eUICC **107** address **106***c*.

Although not illustrated in FIG. **1***f*, the exemplary IP addresses for server **105** and eUICC **107** can be associated with port numbers, such that server **105** can use a first port number with the IP address **106***a* when sending a RAND **118**, and eUICC **107** could use a second port number with the IP address **106***c* when receiving the RAND **118**. Server **105** can use a third port number when receiving a RES **119**, and eUICC **107** could use a fourth port number when

sending the RES **119**. The first and third port numbers could be the same value or number, and the second and fourth port numbers could be the same value or number. In an exemplary embodiment, the RAND **118** and RES **119** in system **199** can be formatted according to the UDP Lite protocol, as specified in IETF RFC 3828, which is also incorporated by reference herein. The term "UDP Lite" described in the present invention may also refer to any connectionless protocol supported on IP Network **111** and wireless network **102** where checksums may be partially disabled, thereby supporting the transfer of bit errors within a datagram.

As illustrated in FIG. **1***f*, an eUICC **107** operating in module **101** could be an application with a unique IPv6 address **106***c*, and the network application **101***x* utilize a different IPv6 address **106***b*. The two IP addresses could be on the same subnet **106***d* used by a module **101**, and the network application **101***x* could communicate with the eUICC **107** locally within module **101** using the two different IPv6 addresses **106***b* and **106***c*. The network application **101***x* could communicate with the eUICC **107** locally for exemplary "other data" depicted in FIG. **1***f*, which could comprise the storing of an address book in the eUICC **107**, reading a set of network parameters by the network application **101***x* from the eUICC **107** with the eUICC profile **107***d*, etc. In an exemplary embodiment, the eUICC **107** could communicate with the mobile network operator **104** for authentication, thus potentially bypassing the network application **101***x* for separate handling of RAND **118** and RES **119** values depicted in FIG. **1***e* above. The authentication messages comprising a RAND **118** and a RES **119** could be communicated between the eUICC **107** with IP address **106***c* to the mobile network operator **104** with IP address **106***a* without the use of a network application **101***x*.

The eUICC **107**, with an associated IP address **106***c* could also communicate with the eUICC subscription manager **109** by sending a packet from IP address **106***c* to an IP address of a server associated with the eUICC subscription manager, such as the exemplary data for a step **205** depicted and described in connection with FIG. **2***a* and FIG. **3** below. Note that the eUICC **107** with the IP address **106***c* can communicate with the eUICC subscription manager **109** without the wireless network **102**, but rather through an IP network **111**. The connectivity for the IP network **111** could be provided by a different wireless network **102** than the wireless network **102** associated with the MNO **104**. Although the use of a specific, unique IP address **106***c* for eUICC **107** is illustrated in FIG. **1***f*, an eUICC **107** does not require a separate IP address **106***c* in other embodiments, and the eUICC **107** could share an IP address **106***b* with a network application **101***x* or other processes or elements within module **101**.

FIG. **2***a*

FIG. **2***a* is a graphical illustration of an exemplary profile for an eUICC, including encrypted data, decryption steps, and decrypted data for the profile, in accordance with exemplary embodiments. Two exemplary forms of an eUICC profile are illustrated in FIG. **2***a*: an encrypted eUICC profile **107***c* and an eUICC profile **107***d*. As contemplated herein, an eUICC profile, such as the exemplary eUICC profile **107***c* and **107***d*, can be similar to profiles for an eUICC contemplated in ETSI specification TS 103 383 v12.2.0 and related standards, but with differences to the currently published standards, as described below. An eUICC profile **107***d* can comprise the data from an encrypted eUICC profile **107***c*, where (i) a first portion of the data, comprising ciphertext **208***a*, has been decrypted, and (ii) a second portion of the encrypted eUICC profile **107***c*, comprising ciphertext **208***b* remains encrypted. Thus, an encrypted eUICC profile **107***c* can include a first portion, or ciphertext **208***a* and a second portion, or ciphertext **208***b* as depicted in FIG. **2***a*. As contemplated herein, an encrypted eUICC profile **107***c* can be referred to as "profile **107***c*", and the eUICC profile **107***d* can be referred to as "profile **107***d*". Both profile **107***c* and profile **107***d* can include a profile identity **107***e*. Profile identity **107***e* can comprise a number or string such that various elements illustrated in FIG. **1***a* can properly refer to, select, and or identity a profile **107***c* or profile **107***d*, including elements such as a mobile network operator **104**, eUICC subscription manager **109**, module **101**, and/or an eUICC **107**.

A profile **107***c* or profile **107***d* in exemplary systems herein, including systems **100**, **300**, and **500** can comprise several different possible embodiments. The profiles could be recorded in a file or data set, and stored in nonvolatile memory associated with an eUICC **107**, such as, but not limited to, a flash memory **101***w*. As transferred across a wireless network **102** and/or IP network **111**, the encrypted eUICC profile **107***c* can be segmented into separate datagrams and transferred using a transport layer protocol such as TCP. An application layer protocol such as transport layer security (TLS) and additional ciphering at the data-link layer could be utilized as well, in addition to sending and receiving the data for a profile **107***c* as ciphertext **208***a* and **208***b*. The exemplary forms for a profile **107***c* and **107***d* in FIG. **2***a* can represent data for a file recorded in a module, such as, but not limited to, (i) storing in a volatile memory **101***e* when the profiles **107***c* or **107***d* are being processed or accessed by a CPU **101***b*, or (ii) storing in an nonvolatile memory such as flash memory **101***w* when the profile **107***c* and **107***d* are stored long term, including times when a battery **101***k* may be removed from module **101**.

Note that profile **107***c* with at least two distinct portions, comprising ciphertext **208***a* and ciphertext **208***b*, could be recorded in separate segments or in distinct location within module **101** or with an eUICC subscription manager **109**, and the two or multiple portions together can comprise a profile **107***c*. In other words, the portions of ciphertext **208***a* and **208***b* (and other data in a profile **107***c* or profile **107***d*) can be recorded in different locations while comprising a profile **107***c*. Other possibilities exist as well for the structure and recording of the exemplary data for a profile **107***c* and **107***d* without departing from the scope of the present invention. Although the label "Stored w/Subscription Manager **109**" is depicted with an encrypted eUICC profile **107***c*, the encrypted eUICC profile **107***c* can also be stored as the format depicted in FIG. **2***a* within a module **101** or an eUICC **107**, until at least a step **206** is performed to decrypt the first ciphertext **208***a*, as described in this FIG. **2***a* and FIG. **3** below.

A first portion of profile **107***c* can include ciphertext **208***a*, where ciphertext **208***a* can include a set of network parameters **201**, a first network module identity **202**, and a first key K **203**. Ciphertext **208***a* can include these elements in a ciphered string or file, such that a third party would not feasibly be able to ready the plaintext within ciphertext **208***a* without a key such as eUICC profile key **107***b*. Ciphertext **208***a* can comprise the set of network parameters **201**, the first network module identity **202**, and the first key K **203** as plaintext ciphered with a eUICC profile key **107***b*, as depicted and described in connection with FIG. **2***b* below. The set of network parameters **201** could comprise a list of values and settings for a module **101** to utilize in connecting with a mobile network operator **104**. The set of network parameters **201** could include a list of numbers or strings for

values such as (i) allowed frequencies or frequency bands to scan, (ii) preferred access lists for roaming onto other wireless networks, (iii) criteria for a module **101** to select base stations **103** in idle mode, (iv) support for emergency services, (v) supported languages or character encoding, (vi) codes to search for in beacons broadcast by a wireless network **102**, (vii) parameters for a radio **101***z* to use when connecting to a wireless network **102**, (viii) names or addresses for a server **105** associated with a MNO **104** in order for a module **101** to send data, etc.

A first network module identity **202** within a ciphertext **208***a* in profile **107***c* can comprise a subscriber identity or related identifier of module **101** when connected to a MNO **104** through a wireless network **102**. In an exemplary embodiment, the first network module identity **202** can comprise an international mobile subscriber identity (IMSI), a globally unique temporary identity (GTUI), a media access control (MAC) address, a temporary mobile subscriber identity (TMSI) or a similar number or string to identify a module **101** with wireless network **102**. Note that a network module identity such as the first network module identity **202** can be different than a module identity **110**, such that a network module identity can be assigned by a mobile network operator **104**, while a module identity **110** can be assigned by manufacturer. In other words, a network module identity such as the first network module identity **202** can change over time for a module **101**, while the module identity **110** can remain the same. The eUICC identity **107***a* can also remain the same value or number while a network module identity changes.

A first key K **203** within a ciphertext **208***a* in profile **107***c* can comprise a standards-based shared secret key K for use in wireless WAN networks based on ETSI, 3GPP, and related standards. As currently specified in ETSI/3GPP standards for LTE and LTE Advanced networks, the shared secret key K, (i) recorded in a SIM or UICC, and a MNO **104** HSS, and (ii) described in 3GPP TS 33.401 V12.9.0 and related standards, comprises a pseudo-random number with a length of 128 bits. The length of key K for standards-based wireless networks **102** may be extended in the future. The use of shared secret key K for authentication of a module **101**, and also for ciphering and data integrity, with a wireless network **102** that implements ETSI and/or 3GPP standards is also defined in the specifications ETSI TS 135 205-209 and related standards. Both the first key K **203** and the second key K **204** can comprise a shared secret key K as described in 3GPP TS 33.401 V12.9.0 FIGS. 6.2-1 and related standards. A mobile network operator **104** using the function of an authentication center, possibly within a home subscriber server (HSS) can generate or process authentication vectors **117** comprising an random number (RAND), an authentication token (AUTN), a response (RES), and a sequence number using the first key K **203** recorded in a eUCC profile **107***c* or **107***d* for the first network module identity **202**. Likewise, authentication vectors **117** can be generated by a HSS and sent to a MME for the second network module identity **209***a* with the second key K **204**.

In exemplary embodiments, the first key K **203** depicted in FIG. **2***a* is also depicted and described as operating as a standards-based shared secret key K in FIG. **3** below at a step **306**. Using the properties of a standards-based key K, a module **101** or an eUICC **107** can use the first key K **203** and a first random number RAND **118** received to process or calculate a first response RES **119**. Step **306** with a first key K **203** can comprise an authentication for a module **101** (comprising a "mobile phone", "mobile station", or "user equipment") within standards such as 3GPP TS 33.401 V12.9.0 and related standards using a shared secret key K. As contemplated herein, the use of the term "random number" can comprise a pseudo-random number with a high degree of information entropy that may not be purely mathematically random, but can be considered a random number and referred to as a random number for the purposes herein.

In an exemplary embodiment, as described in FIG. **2***e* and step **302***a* of FIG. **3** below, the first key K **203** can be optionally recorded in ciphertext **208***a* with an additional layer of encryption, such that the first key K **203** is recorded as a ciphertext **208***c* within ciphertext **208***a*. In other words, upon conversion of ciphertext **208***a* into plaintext using a profile deciphering algorithm **206**, the first key K **203** can retain an additional layer of encryption as ciphertext **208***c* with other data in a profile **107***d* that may be plaintext. This optional additional layer of encryption for the first key K **203** is also depicted within the profile **107***d*, where ciphertext **208***c* optionally remains in profile **107***d* after the conversion of ciphertext **208***a* into plaintext using a step **206**. As described below, the optionally additional layer of encryption for ciphertext **208***c* with the first key K **203** can be (i) processed into plaintext first key K **203** (*ii*) after a subsequent deciphering with an asymmetric ciphering algorithm **219** as illustrated in FIG. **2***e*.

Note that the additional layer of encryption for the first key K **203**, in the form of using a ciphertext **208***c*, can be optionally omitted and the first key K **203** could be plaintext after the conversion of the first portion of profile **107***c* as ciphertext **208***a* into plaintext in a profile **107***d* using a step **206**. Thus, the dashed lines around the first key K **203** as a ciphertext **208***c* indicate the use of ciphertext **208***c* is optional, depending on the security requirements for an MNO **104** when distributing electronically the first key K **203**. In another embodiment as described in FIG. **3**, the first key K **203** can comprise a null value, such as the value for a key K in order to support emergency services if module **101** has no valid UICC, and in this case the use of additional encryption via ciphertext **208***c* can be omitted for a first key K **203**. In a related embodiment, the first key K **203** can be omitted entirely from a profile **107***c* and profile **107***d*, and the eUICC **107** can subsequently use a null value for the first key K **203**.

A second portion of profile **107***c* can include ciphertext **208***b*, where ciphertext **208***b* can include a second key K **204***a* and a second network module identity **209***a*. Ciphertext **208***b* can be ciphered with a symmetric key **127**, where the ciphering and deciphering of a portion of ciphertext **208***b* is depicted and described in connection with FIG. **2***c* below. In an exemplary embodiment, the second network module identity **209***a* can comprise an international mobile subscriber identity (IMSI), a globally unique temporary identity (GTUI), a media access control (MAC) address, or similar number or string to identify a module **101**. In exemplary embodiments, the second network module identity **209***a* can be a different number or value than the first network module identity **202**. Although the second network module identity **209***a* is illustrated in FIG. **2***a* as internal to ciphertext **208***b*, the second module identity **209***a* could be external to ciphertext **208***b*, such as, but not limited to, the second network module identity **209***a* being within a profile **107***c* or profile **107***d* and external to ciphertext **208***b*. In other words, in exemplary embodiments, the second network module identity **209***a* may optionally not be ciphered with the symmetric key **127**, while the second key K **204***a* can be ciphered with the symmetric key **127**. As contemplated herein, the term second network identity **209***a* comprises an

encrypted second network identity **209***a*, where the second network identity **209** is the plaintext version of the encrypted second network identity **209***a*. Likewise, the term second key K **204***a* comprises an encrypted second key K **204***a*, where the second key K **204** is the plaintext version of the encrypted second key K **204***a*.

In another exemplary embodiment, the second network module identity **209** can comprise the same number or value as the first network module identity **202**, or the second network module identity **209** can be optionally omitted. In this case, if (A) the second network module identity **209** comprises the same number or value as the first network module identity **202**, or the second network module identity **209** is optionally omitted, then (B) the mobile network operator **104** can preferably support the use of two different shared secret keys K (i.e. first key K **203** and second key K **204**) for the same network module identity **202**. However, given the current functionality of an HSS and related infrastructure for wireless networks **102**, the use of two different network module identities (i.e. the first network module identity **202** and the second network module identity **209**) with two different shared secret keys K (i.e. first key K **203** and second key K **204**, respectively) may be more compatible or suitable for deployed and operational HSS infrastructure.

A second key K **204***a* (as an encrypted form of plaintext second key K **204**) within a ciphertext **208***b* in profile **107***c* can comprise a standards-based shared secret key K for use in wireless WAN networks based on ETSI, 3GPP, and related standards. The use of a second key K **204***a* (in an unencrypted form of second key K **204**) can be equivalent to a first key k **203**, but comprise a different random number. The second key K **204** can comprise a random number that is 128 bits in length in order to support 4G networks such as LTE that are widely deployed in 2013, although the length of either first key K **203** or second key K **204** may be a longer number in the future, such an exemplary 256 bits and other possibilities exist as well for the key length. A second key K **204** can also be used with standards-based authentication with a wireless network **102**, where the second key K **204** in FIG. **2***a* is also depicted and described as operating as a standards-based shared secret key K in FIG. **3** below at a step **311**.

The list of exemplary data for encrypted eUICC profile **107***c* and an eUICC profile **107***d* comprises an exemplary set, and the profiles could also include additional data to the exemplary data illustrated in FIG. **2***a*. The additional data for a profile **107***c* or **107***d* could include (i) a set of cryptographic parameters for eUICC **107**, (ii) a set of cryptographic algorithms, such as the exemplary cryptographic algorithms described within ETSI TS 135 205-209 and related standards, (iii) a name or address for an eUICC subscription manager **109** associated with the profile **107***c*, (iv) a name or address for a server **105** associated with a mobile network operator **104**, (v) a digital signature of the profile **107***d* processed with a private key from either eUICC subscription manager **109** or MNO **104**, (vi) a date or timestamp for processing the profile **107***c* or **107***d*, (vii) and similar or related values for a module **101** and/or eUICC **107** to utilize the profiles. This exemplary additional data which is not depicted in FIG. **2***a* could be included within or external to any of ciphertext **208***a* and ciphertext **208***b*.

Note that the profile identity **107***e* may preferably be external to ciphertext **208***a* and ciphertext **208***b*, in order that module **101** and/or eUICC **107** can take steps to identify a profile **107***c* or **107***d*. In addition, although a single profile **107***c* and profile **107***d* are illustrated in FIG. **2***a*, a module **101** and/or an eUICC **107** could include a plurality of profiles **107***c* and/or **107***d*, where each of the plurality of profiles could comprise different data associated with different wireless networks **102**. In an exemplary embodiment, more than one profile **107***c* or profile **107***d* could be associated with the same wireless network **102**, such that a mobile network operator **104** can prefer for the same module **101** to utilize different network access credentials over time, such that the same module **101** could use a different key K and a different network module identity with the same wireless network **102** or mobile network operator **104** over time. Different profiles **107***c* or **107***d* can also be identified by the use of a different profile identity **107***e*. Each profile **107***c* can be associated with an eUICC profile key **107***b* as an encryption key (shown in FIG. **2***b* below), although multiple profiles **107***c* could also share the same eUICC profile key **107***b*.

A module **101** can receive a profile **107***c* using a step **205**. A profile **107***c* can be recorded with an eUICC subscription manager **109** before being received by a module **101**. As depicted in FIG. **2***a*, a module **101** can receive the profile **107***c* at a step **205** using the IP network **111**. The use of a step **205** by a module **101** is depicted and described in connection with FIG. **3** below. The module **101** can receive the profile **107***c* using a network that is different than wireless network **102** associated with the network access credentials comprising the first key K **203** and the first network module identity **202**. In an exemplary embodiment, module **101** can receive the profile **107***c* in a step **205** using an initial wireless network **102**, where module **101** connects with and authenticates with the initial wireless network **102** using an initial eUICC profile **107***d* different than the eUICC profile **107***d* depicted in FIG. **2***a*. Or, module **101** could receive a profile **107***c* using a wireless LAN network or a wired connection via a physical interface **101***a* such as a USB interface **101***v*. In another exemplary embodiment, module **101** can receive the profile **107***c* from a manufacturer, distributor, end user, or technician taking steps to load the profile **107***c* into a nonvolatile memory within module **101** or eUICC **107**. Upon receipt of a profile **107***c* by module **101**, the module **101** can record or store the profile **107***c* with an eUICC **107**.

A module **101** can use an eUICC **107** to decrypt the first portion or ciphertext **208***a* in a profile **107***c* using a step **206**. Before a step **206**, a module **101** can receive an eUICC profile key **107***b*, where the eUICC profile key **107***b* can comprise a symmetric ciphering key. The use of a step **206** by module **101** and/or eUICC **107** is also depicted and described in connection with FIG. **2***b* and FIG. **3** below. Note that both eUICC subscription manager **109** and module **101** can record profile **107***c* with ciphertext **208***a* for a period of time, and the step **206** can be taken (i) after receiving eUICC profile key **107***b* and (ii) before module **101** authenticates with a wireless network **102** using the eUICC profile **107***c*. A step **206** can covert the ciphertext **208***a* into plaintext, such that an eUICC **107** can read the values in order to authenticate with a wireless network **102** using the first key K **203**. By encrypting the first network module identity **202** and the first key K **203**, these network access credentials can remain secure, such that a profile **107***c* can be transferred in normal physical media (such as disks, drives, or files transferred electronically) or in communications channels outside the control of a mobile network operator **104** and/or eUICC subscription manager **109**.

As depicted in FIG. **2***a*, after a step **206** to convert profile **107***c* into profile **107***d*, where the ciphertext **208***a* is decrypted using the eUICC profile key **107***b*, the ciphertext **208***b* with the second key K **204***a* can remain encrypted and

thus the second key K can continue to remain secure within a profile **107***d*. In addition, although ciphertext **208***b* is depicted in a profile **107***c* as external to, or separate from, ciphertext **208***a*, ciphertext **208***b* could optionally be included within ciphertext **208***a*. In this case, where ciphertext **208***b* is within ciphertext **208***a* for a profile **107***c*, the result of a step **206** to generate a profile **107***d* can remain the same, where the ciphertext **208***a* can be decrypted by step **206** and ciphertext **208***b* remains encrypted in the resulting profile **107***d* from a step **206**.

A module **101** can use an eUICC **107** to decrypt the second portion or ciphertext **208***b* in a profile **107***d* using a step **207**. Before a step **207**, a module **101** can take the previous steps **205** and **206** in order to record a profile **107***d* with an eUICC **107**. Before a step **207**, module **101** can receive a symmetric key **127**, where the symmetric key **127** can comprise a symmetric ciphering key. In exemplary embodiments, module **101** can receive the symmetric key **127** from a mobile network operator **104** after a user associated with module **101** performs a separate authentication step **308***b* as depicted and described in connection with FIG. **3** and FIG. **4** below. By a mobile network operator **104** only sending symmetric key **127** after the second authentication step **308***b*, the second key K **204** can remain secured, while a user is allowed to access the wireless network **102** (perhaps temporarily or with other constraints such as limiting access to the Internet but allowing emergency calls) using the first key K **203**.

In this manner and by using a second, separate authentication step **308***b* before sending symmetric key **127**, the decryption of network access credentials such as the second key K **204** can remain in the control of a mobile network operator **104**, thereby increasing the security of exemplary systems illustrated herein, such as systems **100**, **300**, and **500**. By ciphering the second key K **204** with symmetric key **127**, security over conventional technology for an eUICC can be increased for both a user and a mobile network operator. With conventional technology for an eUICC, where only the first key K **203** is used for authentication and ciphering of data between module **101** and wireless network **102**, the decryption of the first key K **203** can be outside the control of a mobile network operator **104**. With conventional technology contemplated for an eUICC, an end user outside the control or a contractual relationship with mobile network operator **104**, including possibly fraudulent users or imposters of valid users, could (i) take steps to obtain a plaintext first key K **203** and associated plaintext first network module identity **202** and (ii) use the credentials to fraudulently access the wireless network **102**. In contrast and as contemplated herein, the symmetric key **127** to decrypt the second key K **204***a* can preferably be only made available to users who authenticate with mobile network operator using a step **308***b* as described below (or an equivalent step or related commercial arrangements between a user and a mobile network operator **104**).

In exemplary embodiments, use of two sets of network access credentials comprising at least the first key K **203** and the second key K **204** allows a user with an eUICC profile **107***c* to connect to the wireless network **102** using the first key K **203**, such that the module **101** can have connectivity to the mobile network operator **104** via the wireless network **102** (and also IP network **111**) in order to conduct separate authentication steps **308***b*. The security steps for a mobile network operator **104** to control the decryption of the first key K **203** can be lowered (thus making the distribution of profile **107***c* simpler, less costly, and less complex), while a mobile network operator **104** can retain full control over the decryption of the second key K **204***a* into a usable second key K **204** associated with the second network module identity **209**.

The use of a step **207** by module **101** with an eUICC is also depicted and described in connection with FIG. **2***c* and FIG. **3** below. A module **101** can record profile **107***d* with ciphertext **208***b* for a period of time, and the step **207** can be taken (i) after recording profile **107***d*, and (ii) before module **101** authenticates with a wireless network **102** using the second key K **204**. A step **207** can covert the ciphertext **208***b* into plaintext, such that an eUICC **107** can read the values in order to authenticate with a wireless network **102** using the second key K **204**.

A step **207** can convert the encrypted second key K **204***a* into a plaintext key K **204**. As illustrated in FIG. **2***a*, a step **207** can also convert the encrypted network module identity **209***a* into a plaintext network module identity **209** as well. As discussed above in this FIG. **2***a*, the network module **209** can be optionally omitted from a step **207**, such that the plaintext network module identity **209** could be recorded in a profile **107***d*, and the plaintext network module identity **209** could be included in the first portion, or ciphertext **208***a*, in a profile **107***c*. In another embodiment, the second network module identity **209** can be received by module **101** from wireless network **102** after the module authenticates using the first key K **203**. Although not illustrated in FIG. **2***a*, an eUICC **107** can continue to record the plaintext network module identity **209** and plaintext second key K **204** in an eUICC profile after the second key K **204** is decrypted using the symmetric key **127**. The module **101** can record the second key K **204** in a protected memory address within ROM **101***c* or nonvolatile memory **101***w*.

For embodiments where the first key K **203** is recorded within a ciphertext **208***c* in a profile **107***d* after a step **206**, the first key K **203** can be converted from ciphertext **208***c* into a plaintext first key K **203** using a key deciphering step **217** as depicted and described in connection with FIG. **2***e* below. The key deciphering step **217** could use an asymmetric ciphering algorithm **219** with input of (i) ciphertext **208***c* and (ii) the eUICC private key **215** in order to output the plaintext first key K **203**. As described above, the use of a ciphertext **208***c* can be optionally omitted, and the first key K **203** could be recorded as plaintext in a profile **107***d*. In this case, a step **217** for data in profile **107***d* can be omitted, and thus step **217** with ciphertext **209***c* is depicted in FIG. **2***a* with a dashed line.

Although the first key K **203** and the second key K **204***a* are depicted in FIG. **2***a* as recorded within an eUICC profile **107***c* or eUICC profile **107***d*, the first key K **203** and the second key K **204***a* can be (i) recorded in a nonvolatile memory of module **101**, such as, but not limited to, a flash memory **101***w*, and (ii) without the use of an eUICC **107**. In other words, embodiments contemplated herein can be used without an eUICC **107**, such that (i) a module **101** can use a first key K **203** to authenticated with a wireless network **102**, (ii) after authentication with the first key K **203**, the module can receive a symmetric key **127** to decrypt the second key K **204***a* into second key K **204**, and (iii) the module can authenticate with the wireless network **102** using the second key K **204**. In other words, an eUICC **107** can be omitted and a module **101** can perform the same steps for (i) receiving encrypted network access credentials and (ii) decrypting the encrypted network access credentials without requiring the use of an eUICC **107**.

In embodiments where a module **101** does not include an eUICC **107**, the module can record the first key K **203** and the encrypted second key K **204***a* in a file or memory address

without requiring the use of a profile **107***c* and **107***d*. For example, the first key K **203** could be recorded in a regular, physical UICC, and the second key K **204***a* could also be recorded in a regular, physical UICC as well. The regular, physical UICC could (i) receive the symmetric key **127** and decrypt the second key K **204***a*, and (ii) subsequently record the decrypted second key K **204**. The module **101** and UICC could use the decrypted second key K **204** to authenticate with the wireless network **102** where the first key K **203** was previously used. Other possibilities exist as well for a module **101** to (i) use a first key K **203** and an encrypted second key K **204***a* without departing from the scope of the present invention.

FIG. **2***b*

FIG. **2***b* is a graphical illustration for ciphering and deciphering a profile using a symmetric ciphering algorithm with input of a key, in accordance with exemplary embodiments. An eUICC profile **107***d* can be (i) ciphered using a profile ciphering algorithm **210** and (ii) deciphered with a profile deciphering algorithm **206**. Both the profile ciphering algorithm **210** and the profile deciphering algorithm **206** can include a symmetric ciphering algorithm **211** and the use of an eUICC profile key **107***b*. An eUICC subscription manager **109**, or another node outside a module **101** as illustrated in FIG. **1***a*, can use a profile ciphering algorithm **210** to encrypt an eUICC profile **107***c*. The processing and computational steps for performing a profile ciphering algorithm **210** could be conducted on a server associated with the eUICC subscription manager **109**. The server associated with the eUICC subscription manager **109** can be similar to a server **105** illustrated in FIG. **1***a*, with the difference being the server associated with the eUICC subscription manager **109** can be co-located, associated with, or under the operational control of an eUICC subscription manager **109**. Data for an eUICC profile **107***d* used in a profile ciphering algorithm **210** can comprise the exemplary data illustrated for a profile **107***d* in FIG. **2***a* above, and an eUICC subscription manager **109** could receive the data for the profile **107***d* from a mobile network operator **104**. The mobile network operator **104** could process, generate, or derive the exemplary values in a profile **107***d* that can include the network parameters **201**, the first network module identity **202**, the first key K **203**, and the ciphertext **208***b*. As contemplated herein, the MNO **104** could also function as a eUICC subscription manager **109**, and thus in embodiments the profile **107***d* could be generated by a MNO **104** as well.

Symmetric ciphering algorithm **211** in a profile ciphering algorithm **210** can utilize a key such as an eUICC profile key **107***b* to encrypt or cipher data. Examples of symmetric ciphers for a symmetric ciphering algorithm **210** include (i) an Advanced Encryption Standard (AES) cipher, as specified in Federal Information Processing Standards (FIPS) Publication 197, and (ii) Triple Data Encryption Standard (Triple DES), as described in NIST Special Publication 800-67 Revision 1, "Recommendation for the Triple Data Encryption Algorithm (TDEA) Block Cipher (Revised January 2012)". Other symmetric ciphers and/or combinations of symmetric ciphers can be utilized as well for a symmetric ciphering algorithm **210** without departing from the scope of the present invention. In general, a symmetric ciphering algorithm **211** in a profile ciphering algorithm **210** (and other steps for symmetric ciphering contemplated herein) can accept input of plaintext and a key, and using the two sets of input data, the symmetric ciphering algorithm **211** can perform multiple rounds of mixing, substituting, rotating, and/or perform XOR functions with the input in order to produce a ciphertext output. Although not illustrated in FIG. **2***b* and FIG. **2***c*, a set of cryptographic parameters can also be input into symmetric ciphering algorithms **211** in order to specify parameters or configurations of the symmetric ciphering algorithm **211**, such as, but not limited to, the selection of 128, 192, or 256 bits with AES.

A cipher key used with a symmetric ciphering algorithm **211**, such as, but not limited to, the exemplary eUICC profile key **107***b* can comprise a random or pseudo-random number, with an appropriate length or number of bits for the symmetric ciphering algorithm **211**. The exemplary eUICC profile key **107***b* for use in a profile ciphering algorithm **210** could be shared between an eUICC subscription manager **109** and an eUICC **107** in a module **101** in several different ways. The eUICC profile key **107***b* could be recorded in or with the eUICC **107** upon manufacturing of module **101**. The eUICC profile key **107***b* could be securely received by a module **101** using a wireless network **102** from the eUICC subscription manager **109** before the module **101** performs a step that includes a profile deciphering algorithm **206**. An encrypted eUICC profile key **107***b* could be received by module **101** and then decrypted by module **101** using an asymmetric ciphering algorithm **219** as depicted and described in connection with FIG. **2***e* below. The eUICC profile key **107***b* could also be derived by a module **101** and an eUICC subscription manager **109** (or another server performing the steps in a profile ciphering algorithm **210**) using a key exchange such as, but not limited to, a Diffie-Hellman key exchange or an Elliptic Curve Diffie-Hellman key exchange.

Other possibilities exist as well for a module **101** and an eUICC subscription manager **109** (or another server performing the steps in a profile ciphering algorithm **210**) to securely share a eUICC profile key **107***b* without departing from the scope of the present invention. In addition, although a single eUICC profile key **107***b* is illustrated in FIG. **2***b*, an eUICC subscription manager **109** and an eUICC **107** could use multiple eUICC profile keys **107***b*, including embodiments where a first encrypted eUICC profile **107***c* is associated with a first eUICC profile key **107***b* and a second encrypted eUICC profile **107***c* is associated with a second eUICC profile key **107***b*. Further, each encrypted eUICC profile **107***c* could be uniquely associated with a different eUICC profile key **107***b*. Each of the different eUICC profile keys **107***b* could be securely transferred between the eUICC **107** and the eUICC subscription manager **109** using either (i) asymmetric ciphering **219** as illustrated in FIG. **2***e* below, or (ii) a key exchange, as depicted and described in connection with step **303** of FIG. **3** below.

With a profile ciphering algorithm **210**, the symmetric ciphering algorithm **211** can accept input of (i) the eUICC profile key **107***b*, and (ii) and an eUICC profile **107***d* plus an optional security token **212**, in order to output an encrypted eUICC profile **107***c*. The encrypted eUICC profile **107***c* can be reasonably secured, such that deciphering the profile **107***c* without the eUICC profile key **107***b* would be infeasible. After ciphering with a symmetric ciphering algorithm **211**, deciphering the ciphertext without the cipher key would require extensive dedicated computational resources such as hundreds of servers or more for many years or longer. The optional security token **212** can include a string or number in order to enhance the security of the ciphertext output by a symmetric ciphering algorithm **211**. The optional security token **211** could comprise a random number or other value, such that the input and output of a symmetric ciphering algorithm **211** is properly padded, where the length of input and output are appropriate for the symmetric ciphering algorithm.

Although the input of eUICC profile **107***d* is depicted in FIG. **2***b* with a label of "plaintext", the eUICC profile **107***d* in a profile ciphering algorithm **210**, the "plaintext" eUICC profile **107***d* can include encrypted data such as ciphertext **208***b*, where ciphertext **208***b* can include encrypted data ciphered with a different key than eUICC profile key **107***b*. In other words, a profile **107***c* can include multiple layers of ciphering, where different layers use different cipher keys, and the exemplary a profile ciphering algorithm **210** with the eUICC profile key **107***b* can be used to encrypt the ciphertext **208***a* illustrated in FIG. **2***a* above. As noted above with FIG. **2***a*, ciphertext **208***b* can be either (i) included inside ciphertext **208***a*, or (ii) remain external to ciphertext **208***a*.

After a server associated with an eUICC subscription manager **109** generates the output of an encrypted profile **107***c* from a profile ciphering algorithm **210**, the encrypted profile **107***c* can be transferred to module **101** through either unsecured channels, or channels that are not under the full control of an eUICC subscription manager **109** or a mobile network operator **104** associated with the profile **107***c*. The module **101** can receive the profile **107***c* through an IP network **111**, including using the public Internet, or a manufacturer, distributor, technician, or end user could load the profile **107***c* into the module (such as, but not limited to, using a USB interface **101***v*). This initial loading of profile **107***c* by a manufacturer, distributor, technician, or end user may be required for the first use or startup of a module **101**, but then module **101** may preferably receive additional or subsequent profiles **107***c* at later times using IP network **111** and other automated, electronic means using a network including a wireless network **102**.

A module **101** or an eUICC **107** within module **101** can process the encrypted profile **107***c* using a profile deciphering algorithm **206** as depicted in FIG. **2***b* and also depicted and described in FIG. **2***a*. Note that the module **101** or eUICC **107** could record the encrypted profile **107***c* for a period of time, and take the steps to decrypt the profile **107***c* in a profile deciphering algorithm **206** after receiving the eUICC profile key **107***b* associated with the profile **107***c*. Or the eUICC profile key **107***b* could be recorded in a module **101** or with an eUICC **107** before profile **107***c* is received, and the steps for a profile deciphering algorithm **206** could be performed after the receipt of an instruction from an eUICC subscription manager **109** or at a specified time or under specified conditions (such as a module **101** needing or preferring to connect to a wireless network **102** for the first time). An exemplary use and sequence for a profile deciphering algorithm **206** is depicted and described in connection with FIG. **3** below. Other possibilities exist as well for the time that a module **101** or an eUICC **107** can process a profile deciphering algorithm **206** without departing from the scope of the present invention. As contemplated herein, the use of the term "step **206**" can refer to the use of a profile deciphering algorithm **206**, and a "step **207**" can refer to the use of a key K deciphering algorithm **207**, etc.

A profile deciphering algorithm **206** can include a symmetric ciphering algorithm **211**. The symmetric ciphering algorithm **211** can be equivalent to or the same as the symmetric ciphering algorithm **211** in a profile ciphering algorithm **210** operated by a server and as described above. The symmetric ciphering algorithm **211** can accept input of the eUICC profile key **107***b* as a cipher key. The module **101** or eUICC **107** could securely receive the eUICC profile key **107***b* using the steps described above in connection with a profile ciphering algorithm **210**. An exemplary transfer or key exchange for module **101** to receive eUICC profile key **107***b* is also described in FIG. **2***e* and FIG. **3** below. The symmetric ciphering algorithm **211** in a profile deciphering algorithm **206** can also accept input of the encrypted eUICC profile **107***c*, which could comprise ciphertext **208***a*.

The symmetric ciphering algorithm **211** in a profile deciphering algorithm **206** can decrypt the ciphertext **208***a* in order to output the profile **107***d*, where the ciphertext **208***a* is converted to plaintext. Ciphertext **208***b* in a profile **107***c* can remain encrypted using the symmetric key **127** after a profile deciphering algorithm **206**. In other words, the profile deciphering algorithm **206** can convert a portion of the profile **107***c* into plaintext, where the portion comprises ciphertext **208***a*. As depicted in FIG. **2***a* above, exemplary plaintext in a profile **107***d* resulting from a profile deciphering algorithm **206** can include a first network module identity **202** and the first key K **203**. The resulting plaintext from a profile deciphering algorithm **206** can also optionally include a security token **212**. Security token **212** could comprise the string or value also optionally input into the symmetric ciphering algorithm **211** in a profile ciphering algorithm **210**. The security token **212** can include a padding value to make the length of the security token **212** and profile **107***d* a desired value for the symmetric ciphering algorithm **211** or other requirements such as making the encrypted profile **107***c* a desired length.

FIG. **2***c*

FIG. **2***c* is a graphical illustration for ciphering and deciphering a key K using a symmetric ciphering algorithm with input of a key, in accordance with exemplary embodiments. A second key K **204***a* can be (i) ciphered using a key K ciphering algorithm **213** and (ii) deciphered with a key K deciphering algorithm **207**. Both the key K ciphering algorithm **213** and the key K deciphering algorithm **207** can include a symmetric ciphering algorithm **211** and the use of a symmetric key **127**. A mobile network operator **104** can use a key K ciphering algorithm **213** to encrypt the second key K **204***a*. The processing and computational steps for performing a key K ciphering algorithm **213** could be conducted on a server associated with the mobile network operator **104** such as a server **105** illustrated in FIG. **1***a*. Other possibilities exist as well for the location or association of a computer to process a key K ciphering algorithm **213** without departing from the scope of the present invention.

A key K ciphering algorithm **213** can include a symmetric ciphering algorithm **211**. The symmetric ciphering algorithm **211** can similar to the symmetric ciphering algorithm **211** as depicted and described in connection with FIG. **2***b* above. A symmetric ciphering algorithm **211** can include a collection of different symmetric ciphers, such that a first symmetric cipher comprising the AES cipher could be used in a FIG. **2***b*, while a different symmetric cipher could be used in a FIG. **2***c*. Or, the same algorithm within symmetric ciphering algorithm **211** can be used in a symmetric ciphering algorithm **211** in FIG. **2***b* and FIG. **2***c*. The symmetric ciphering algorithm **211** in a key K ciphering algorithm **213** can accept input of a symmetric key **127** and plaintext in the form of a second key K **204**. The second key K **204** could represent a random number, such as, but not limited to, an exemplary 128 random number currently used as a shared secret key K in standard LTE networks and a different length for second key K **204** could be used as well. The second key K **204** could be derived or processed by the function of an authentication center with a home subscriber server (HSS). Although not illustrated in FIG. **2***c*, but as illustrated in FIG. **2***a*, the plaintext as input into a symmetric ciphering algorithm **211** can also include a second network module identity **209**. The input into a symmetric ciphering algorithm **211** for

a key K ciphering algorithm **213** can also include a number, value, or string for a security token **212**. The use of a security token **212** is depicted and described in connection with FIG. **2***b* above. Thus, a mobile network operator **104** could also use a key K ciphering algorithm **213** to encrypt other data in addition to a second key K **204**.

The symmetric key **127** input into a symmetric ciphering algorithm **211** in a key K ciphering algorithm **213** can comprise a random number processed or generated by a server **105**, where the server **105** is associated with a mobile network operator **104**. The server processing or deriving a symmetric key **127** can comprise or be associated with an HSS for an LTE or LTE advanced network. As illustrated in FIG. **2***c*, the symmetric key **127** can comprise a cipher key for the symmetric ciphering algorithm **211**. A cipher key used with a symmetric ciphering algorithm **211**, such as, but not limited to, the exemplary symmetric key **127** can comprise a random or pseudo-random number, with an appropriate length or number of bits for the symmetric ciphering algorithm **211** in a key K ciphering algorithm **213**. Using the input of the symmetric key **127** and the plaintext second key K **204**, the symmetric ciphering algorithm **211** could output an encrypted second key K **204***a*. As illustrated in FIG. **2***c* and FIG. **2***a* above, the encrypted second key K **204***a* could be included in ciphertext **208***b*. The symmetric ciphering algorithm **211** in a key K ciphering algorithm **213** may also optionally include a security token **212**, as illustrated.

After processing the ciphertext **208***b*, the mobile network operator **104** can either (i) include the ciphertext **208***b* in a profile **107***d* and send the profile **107***d* to an eUICC subscription manager **109**, or (ii) send the ciphertext **208***b* directly an eUICC subscription manager **109** for the eUICC subscription manager **109** to include the ciphertext **208***b* in a profile **107***d*. Ciphertext **208***b* could be recorded in or with an eUICC profile **107***d*, where an eUICC subscription manager **109**, or another server associated with an eUICC subscription manager **109** can subsequently encrypt the eUICC profile **107***d* using a profile ciphering algorithm **210** depicted and described in connection with FIG. **2***b* above. Other possibilities exist as well for the timing an sequence of steps for transferring and recording a ciphertext **208***b* output from a key K ciphering algorithm **213** without departing from the scope of the present invention. After profile **107***d* with ciphertext **208***b* has been created, the profile **107***d* can be ciphered with a profile ciphering algorithm **210** to create an encrypted profile **107***c*, as illustrated in FIG. **2***b* above.

The exemplary symmetric key **127** for use in a key K ciphering algorithm **213** could be shared between a module **101** with an eUICC **107** and the mobile network operator **104** in several different ways. The symmetric key **127** could be sent from the mobile network operator **104** (possibly using a server **105**) to a module **101** after (i) the module properly authenticates with the mobile network operator **104** and/or a wireless network **102** associated with the MNO **104** using the first key K **203**, and (ii) a user **113** associated with the module **101** authenticates with the MNO **104**. Note that if MNO **104** sends the symmetric key **127** to module **101** after module **101** uses the first key K **203** to authenticate, then the ciphering or encryption of the channel used to send the symmetric key K **127** can be within the control of MNO **104** (whereas the communications channel and ciphering keys used to send encrypted profile **107***c* may be outside the control of MNO **104**). The symmetric key K **127** could also be derived by a module **101** and an MNO **104** using a key exchange, where the symmetric key K **127** could be derived using a RAND **118** value received by the module **101** after authenticating with the first key K **203**, where the module **101** and/or eUICC **107** derives the symmetric key K **127** using the RAND **118** value and the first key K **203**. Other possibilities exist as well for a module **101** and a mobile network operator **104** to securely share a symmetric key **127** without departing from the scope of the present invention.

A module **101** or an eUICC **107** within module **101** can process the ciphertext **208***b* using a key K deciphering algorithm **207** as depicted in FIG. **2***c*. Note that the module **101** or eUICC **107** could record the ciphertext **208***b* for a period of time, and take the steps to decrypt the ciphertext **208***b* with a key K deciphering algorithm **207** after receiving or deriving the symmetric key **127**. Or the symmetric key **127** could be recorded in a module **101** or with an eUICC **107** before ciphertext **208***b* is decrypted, and the steps for a key K deciphering algorithm **207** could be performed after the receipt of an instruction from the MNO **104** to decrypt the second key K **204***a*. An exemplary use and sequence for a key K deciphering algorithm **207** is depicted and described in connection with FIG. **3** below. Other possibilities exist as well for the time that a module **101** or an eUICC **107** can process a key K deciphering algorithm **207** without departing from the scope of the present invention.

A key K deciphering algorithm **207** can include a symmetric ciphering algorithm **211**. The symmetric ciphering algorithm **211** can be equivalent to or the same as the symmetric ciphering algorithm **211** in a key K ciphering algorithm **213** performed by an MNO **104** and as described in this FIG. **2***c* above. The symmetric ciphering algorithm **211** can accept input of the symmetric key **127** as a cipher key. The module **101** or eUICC **107** could securely receive or derived the symmetric key **127** using the steps described above in connection with a key K ciphering algorithm **213**. The symmetric ciphering algorithm **211** in a key K deciphering algorithm **207** can also accept input of the encrypted key K **204***a*, which could comprise ciphertext **208***b*. Additional data, such as, but not limited to a second module identity **209***a* could optionally be included within ciphertext **208***b*.

The symmetric ciphering algorithm **211** in a key K deciphering algorithm **207** can decrypt the ciphertext **208***b* in order to output the plaintext second key K **204**, such that the ciphertext **208***b* is converted to plaintext. The resulting plaintext from a key K deciphering algorithm **207** can also optionally include a security token **212**. Security token **212** could comprise the string or value also optionally input into the symmetric ciphering algorithm **211** in a key K ciphering algorithm **213**. The security token **212** can include a padding value to make the length of the security token **212** and second key K **204***a* a desired value for the symmetric ciphering algorithm **211** or other requirements such as making the ciphertext **208***b* a desired length.

FIG. **2***d*

FIG. **2***d* is a graphical illustration of a public key and a private key for an eUICC, in accordance with exemplary embodiments. An eUICC **107** within a module **101** can include an eUICC private key **215**, which can be associated with an eUICC public key **214**. The eUICC private key **215** and eUICC public key **214** can comprise a public key infrastructure (PKI) key pair for eUICC **107**. The eUICC subscription manager **109** can record the eUICC public key **214** along with an eUICC identity **107***a*, such that the eUICC subscription manager **109** can properly associate one of a plurality of eUICC public keys **214** with the proper eUICC **107**. Although not illustrated in FIG. **2***d*, an eUICC subscription manager **109** could record the eUICC public key **214** and an associated eUICC identity **107***a* in a database.

The use of an eUICC ID **107***a* is also depicted and described in connection with FIG. **3** below.

The eUICC private key **215** and eUICC public key **214** could be processed using RSA algorithms or elliptic curve cryptography (ECC) algorithms, and other possibilities exist as well for the format of PKI keys without departing from the scope of the present invention. An ECC key length of 283 bits provides security similar to an RSA key length of approximately 2048 bits, and in an exemplary embodiment the eUICC key pair can utilize an ECC algorithm, although an RSA algorithm or other algorithms for PKI keys could also be utilized by an eUICC **107**. The eUICC private key **215** can be processed or derived using a random number. eUICC public key **214** can comprise a key recorded in an X.509 certificate that also includes a module identity **110** and/or eUICC identity **107***a*, although the use of an X.509 certificate with an eUICC public key **214** is not required. The eUICC public key **214** in the form of an X.509 certificate can optionally be signed by a certificate authority. The keys can support standards such as, but not limited to, the International Organization for Standardization (ISO) ISO/IEC 9594 series of standards (herein incorporated by reference) and the Internet Engineering Task Force (IETF) RFC 5280 titled "Internet X.509 Public Key Infrastructure Certificate and Certificate Revocation List (CRL) Profile" (herein incorporated by reference), including future updates to these standards.

Several possibilities exist for the source of an eUICC private key **215** and eUICC public key **214**. The eUICC private key **215** and eUICC public key **214** be generated using standard software tools such as, but not limited to, Openssl, libmcrypt, and/or and Crypto++, and other tools to generate public and private keys exist as well. Public and private keys as contemplated herein could be recorded in a file such as, but not limited to, a *.pem file (Privacy-enhanced Electronic Mail), a file formatted according to Basic Encoding Rules (BER), Canonical Encoding Rules (CER), or Distinguished Encoding Rules (DER), or as text or binary file. Other formats for public and private keys may be utilized as well, including proprietary formats. A module **101** could derive the PKI key pair using a set of cryptographic algorithms and a key pair generation algorithm. The module **101** could derive the PKI key pair using a random number generator **128** and a set of cryptographic algorithms **141**, where the random number generator **128** uses input from a sensor **101***f* and/or a clock **160** in order to obtain a random number with a high degree of information entropy.

A manufacturer of module **101** or an eUICC subscription manager **109** could also derive the eUICC private key **215** and eUICC public key **214** in a server, and load the eUICC private key **215** into a nonvolatile memory of module **101** before distribution of the module **101**. The manufacturer of module **101** could send or make available the eUICC public key **214** to an eUICC subscription manager **109**. The module **101** could send record the eUICC public key **214** and send the eUICC public key **214** along with the eUICC identity **107***a* (possibly with or in the form of a module identity **110**) to an eUICC subscription manager **109** before the module **101** receives the encrypted eUICC profile **170***c*.

Although FIG. **2***d* illustrates an eUICC private key **215** and eUICC public key **214**, a module **101** could use a PKI key pair associated with module **101** instead of being associated with an eUICC **107** in order to use an asymmetric ciphering algorithm as depicted in FIG. **2***e* below. In other words, a module **101** and an eUICC subscription manager **109** could use a module private key **112***a* and a module public key **112***b* in order to obtain the same functionality of an eUICC private key **215** and an eUICC public key **214**. A module private key **112***a* and a module public key **112***b* for a module **101** could have the same properties and characteristics for an eUICC private key **215** and an eUICC public key **214** as described herein. Other possibilities exist as well for the source or use of a PKI key pair for an eUICC private key **215** and eUICC public key **214** without departing from the scope of the present invention.

In exemplary embodiments, both the eUICC subscription manager **109** and the eUICC **107** can include a set of digital signature algorithms **221**, in order to sign and verify messages between (i) an eUICC **107** and eUICC subscription manager **109**, and (ii) eUICC subscription manger **109** and MNO **104**. Digital signature algorithms **221** can also verify signatures such as, but not limited to, comparing that (i) a first secure hash value received from a sending node matches (ii) a second secure hash value calculated using a recorded public key associated with the sending node. Digital signature algorithms **221** can utilize algorithms in National Institute of Standards (NIST) "FIPS 186-4: Digital Signature Standard", or IETF RFC 6979 titled "Deterministic Usage of the Digital Signature Algorithm (DSA) and Elliptic Curve Digital Signature Algorithm (ECDSA)". The use of ECDSA algorithm within a set of digital signature algorithms **221** may be preferred if keys such as, but not limited to, eUICC private key **215** and eUICC public key **214** are based on elliptic curve cryptography. Digital signature algorithms **221** could also include an RSA digital signature algorithm (DSA) for use with RSA-based public and private keys. Other PKI standards or proprietary techniques for securely generating digital signatures and verifying digital signatures may be utilized as well in digital signature algorithms **221**. As depicted and described in connection with FIG. **3** below, a digital signature algorithm **221** can be used in a step **205** in order to authenticate an eUICC **107** operating in a module **101** with an eUICC subscription manager **109**.

As illustrated in FIG. **2***d*, the eUICC subscription manager **109** may also be associated with an eUICC subscription manager public key **220** and an eUICC subscription manager private key **222**, and the two keys can comprise a PKI key pair for the eUICC subscription manager **109**. The eUICC subscription manager public key **220** and an eUICC subscription manager private key **222** can be formatted and processed by algorithms equivalent or similar to the algorithms and format for the eUICC public key **214** and the eUICC private key **215** described in this FIG. **2***d* above. The eUICC subscription manager public key **220** can optionally be signed by a certificate authority. An eUICC **107** can use the digital signature algorithms **221** and the eUICC subscription manager public key **220** to verify a digital signature from the eUICC subscription manager **109**. Although not illustrated in FIG. **2***d*, the eUICC **107** or module **101** could also record a public key associated with the mobile network operator **104**, and use the public key associated with the mobile network operator **104** to verify a digital signature from the mobile network operator **104** using the digital signature algorithms **221**.

FIG. **2***e*

FIG. **2***e* is a graphical illustration for ciphering and deciphering a key for an eUICC using an asymmetric ciphering algorithm using a PKI key pair, in accordance with exemplary embodiments. An eUICC subscription manager **109** could process or calculate a key ciphering algorithm **216** and a module **101** or eUICC **107** could process or calculate a key deciphering algorithm **217**. The eUICC key ciphering algorithm **216** can use an asymmetric ciphering algorithm

219 with an input of (i) an eUICC public key 214 as a cipher key and (ii) the eUICC profile key 107*b* as plaintext in order to output ciphertext of an encrypted eUICC key 218. The plaintext eUICC profile key 107*b* can comprise a random number of appropriate length for processing a profile ciphering algorithm 210 and profile deciphering algorithm 206 as depicted and described in connection with FIG. 2*b* above. As illustrated in FIG. 2*e*, the input into a key ciphering algorithm 216 could also include an optional security token 212, where a security token 212 is depicted and described in connection with FIG. 2*b* above.

An asymmetric ciphering algorithm 219 within a key ciphering algorithm 216 and a key deciphering algorithm 217 an comprise an algorithm for utilizing public key infrastructure (PKI) techniques to both (i) encrypt plaintext with a public key and (ii) decrypt plaintext with a private key. Example algorithms within asymmetric ciphering algorithm 219 include an RSA algorithm and an elliptic curve cryptography (ECC) algorithm, and other asymmetric ciphering algorithms could be utilized as well. The use and application of RSA algorithms and cryptography are described within IETF RFC 3447 titled "Public-Key Cryptography Standards (PKCS) #1: RSA Cryptography Specifications Version 2.1", herein incorporated by reference, among other published standards for the use of RSA algorithms. The use of an RSA algorithm in an asymmetric ciphering algorithm 219 for encryption and decryption, can also be processed according to the description of the RSA algorithm according to the Wikipedia entry for "RSA (algorithm)" as of Sep. 9, 2013, which is incorporated by reference herein. The use and application of an ECC algorithm for asymmetric ciphering algorithm 219 can conform with algorithms within IETF RFC 6090 titled "Fundamental Elliptic Curve Cryptography Algorithms" (herein incorporated by reference), among other published standards using ECC. Asymmetric ciphering algorithm 219 can also utilize elliptic curve cryptography algorithms for the Wikipedia entry for "Elliptic curve cryptography" as of Sep. 9, 2013, which is incorporated by reference herein.

ECC algorithms (with corresponding ECC-based PKI keys) may utilized for asymmetric ciphering algorithm 219 according to exemplary preferred embodiments in order to maintain high security with smaller key lengths, compared to RSA, thereby helping to comparably reduce the message lengths, radio frequency spectrum utilization, and processing power required by module 101. RSA algorithms (with corresponding RSA-base PKI keys) for asymmetric ciphering algorithm 219 may be utilized in other embodiments in order to maintain compatibility with deployed or legacy software and systems that supports RSA based keys and algorithms.

After an eUICC subscription manager 109 uses a eUICC key ciphering algorithm 216 to convert a plaintext eUICC profile key 107*b* into a ciphertext as an encrypted eUICC key 218, the eUICC subscription manager can send the ciphertext to the module 101. The eUICC subscription manager could send the ciphertext as an encrypted eUICC key 218 to module 101 using an IP network 111, and the IP network 111 could comprise the public Internet. In this manner, the module 101 can securely receive the encrypted eUICC key 218 in order to perform, process, or calculate a key deciphering algorithm 217. Third parties with access to the encrypted eUICC key 218 would not feasibly be able to read the plaintext eUICC profile key 107*b*, even with access to the eUICC public key 214. The module 101 could receive the encrypted eUICC key 218 along with an eUICC profile identity 107*e* in order to determine a profile 107*c* associated with the encrypted eUICC key 218, where a subsequent step (after deciphering the encrypted eUICC key 218) could comprise a profile deciphering algorithm 206. The module 101 could receive the encrypted eUICC key 218 either before or after receiving the profile 107*c*.

After receiving the encrypted eUICC key 218, the module 101 or eUICC 107 could decrypt the encrypted eUICC key 218 using a key deciphering algorithm 217. A key deciphering algorithm 217 can include a asymmetric ciphering algorithm 219. The asymmetric ciphering algorithm 219 can be equivalent to or the same as the asymmetric ciphering algorithm 219 in a key ciphering algorithm 216 operated or processed by an eUICC subscription manager 109 as described in this FIG. 2*e* above. The asymmetric ciphering algorithm 219 in a key deciphering algorithm 217 can accept input of the eUICC private key 215 as a cipher key. The asymmetric ciphering algorithm 219 in a key deciphering algorithm 217 can also accept input of the encrypted eUICC key 218 as a ciphertext. The key deciphering algorithm 217 can use an asymmetric ciphering algorithm 219 with an input of (i) an eUICC private key 215 as a cipher key and (ii) the encrypted eUICC key 218 as ciphertext in order to output plaintext of an eUICC profile key 107*b*. As illustrated in FIG. 2*e*, the plaintext could also optionally include a security token 212. After processing a plaintext eUICC profile key 107*b* from a key deciphering algorithm 217, module 101 or eUICC 107 could use the plaintext eUICC profile key 107*b* in order to perform a profile deciphering algorithm 206 as illustrated in FIG. 2*b*.

Although exemplary embodiments can include the use of a key ciphering algorithm 216 and a key deciphering algorithm 217 in order to securely transfer the eUICC profile key 107*b* from an eUICC subscription manager 109 to a module 101, a key ciphering algorithm 216 and a key deciphering algorithm 217 can be omitted in other exemplary embodiments. For example, if the eUICC subscription manager and module 101 or eUICC 107 support the use of a secure key exchange such as Diffie-Hellman or ECDH, then the eUICC profile key 107*b* could be mutually derived by the two nodes and the encrypted eUICC key 218 would not need to be transferred through an IP network 111 between the two nodes.

In another embodiment, as depicted in FIG. 2*e*, the key ciphering algorithm 216 and key deciphering algorithm 217 may also be used with ciphertext 208*c* with an encrypted first key K 203 and a plaintext of the first key K 203, if a profile 107*d* includes ciphertext 208*c* with encrypted first key K 203. In this case, a mobile network operator 104 could perform the key ciphering algorithm 216 with input of (i) the plaintext first key K 203 and (ii) the eUICC public key 214 in order to output ciphertext 208*c*. The ciphertext 208*c* can include the encrypted first key K 203, although the ciphertext 208*c* could also include other data such as the network parameters 201. The MNO 104 could send the ciphertext 208*c* (with the encrypted first key K) to the eUICC subscription manager 109 in a step 302*b* in FIG. 3 for inclusion in the profile 107*d* and profile 107*c*. As depicted in FIG. 2*e*, a module 101 or eUICC 107 could perform the key deciphering algorithm 217 on the ciphertext 208*c* with the first encrypted key K 203 in order to obtain the plaintext first key K 203. In this manner, the first key K 203 is not shared as plaintext with any entities besides the MNO 104 and a module 101 with the eUICC 107. In other words, a MNO 104 can use a key ciphering algorithm 216 to prevent the sharing of a plaintext first key K 203 with an eUICC subscription manager 109.

In addition, although FIG. **2***e* illustrates an eUICC subscription manager as performing the eUICC key ciphering algorithm **216** and the module **101** or eUICC **107** as performing the eUICC key deciphering algorithm **217**, an alternative embodiment contemplates that the eUICC subscription manager **109** performs the eUICC key deciphering algorithm **217** and the module **101** or eUICC **107** performs the eUICC key ciphering algorithm **216**. In this alternative embodiment, the module **101** can (i) derive the eUICC profile key **107***b*, and (ii) send the ciphertext comprising the encrypted eUICC key **218** to the eUICC subscription manager **109**. In this alternative embodiment, the module **101** can (i) use the eUICC subscription manager public key **220** to cipher the derived eUICC profile key **107***b*, (ii) send the encrypted eUICC profile key **107***b* to the eUICC subscription manager **109**, and (iii) the eUICC subscription manager **109** can decrypt the encrypted eUICC profile key **107***b* using the eUICC subscription manager private key **222**. In this alternative embodiment, the eUICC subscription manager **109** could (i) use the eUICC key deciphering algorithm **217** to decrypt the encrypted eUICC key **218** received from the module **101**, and then (ii) subsequent encrypt the profile **107***d* into a profile **107***c* using a profile ciphering algorithm **210** as depicted and described in connection with FIG. **2***b* above.

FIG. **3**

FIG. **3** is a simplified message flow diagram illustrating an exemplary system with exemplary data sent and received by a module with an eUICC, in accordance with exemplary embodiments. System **300** can include an eUICC subscription manager **109**, an IP network **111**, a mobile network operator **104**, a module **101**. A module **101** can include a network application **101***x* and an eUICC **107**. The network application **101***x* can perform the operations for communicating with the wireless network **102** (*i*) at the data-link layer using standards for PLMN networks such as, but not limited to exemplary radio resource control standards within ETSI TS 136 331 v.10.7 entitled "LTE; Evolved Universal Terrestrial Radio Access (E-UTRA); Radio Resource Control (RRC); Protocol Specification", which is herein incorporated by reference, and (ii) at the network layer using Internet Protocol. Other standards for communication at the data-link layer between a network application **101***x* and a mobile network operator **104** can be utilized as well without departing from the scope of the present invention. The (i) mobile device **101**, using the network application **101***x*, and (ii) the mobile network operator **104** can send and receive data using the wireless network **102** depicted and described in connection with FIG. **1***a*. Although a single module **101** is illustrated in system **300** in FIG. **3**, a system **300** could include a plurality of modules **101**.

The network application **101***x* and the eUICC **107** can send and receive data locally within the module **101** using an operating system **101***h* and/or a system bus **101***d*. The network application **101***x* and the eUICC **107** can send and receive data locally within the module **101** using an eUICC driver **128** as depicted and described in connection with FIG. **1***b* and FIG. **1***e*. The module **101**, using a network application **101***x*, can send and receive data with the eUICC subscription manager **109** using the IP network **111**. As illustrated in FIG. **3**, the module **101** can send and receive data with the eUICC subscription manager **109** in a step **205** using an initial network.

The initial network could comprise a different wireless network **102** than a wireless network **102** (*i*) for the mobile network operator **104**, and (ii) used for a first authentication **304** and a second authentication **310**. In other words, module **101** can send and receive data for an eUICC profile **107***c* through a initial network that is different than the wireless network **102** associated with the mobile network operator **104**. The network application **101***x* could support different standards for wireless networking technologies, such that the different wireless network **102** used to access the eUICC subscription manager **109** could comprise exemplary networks such as WiFi or LTE Advanced, and the network application **101***x* could use LTE to communicated with the mobile network operator **104**. Other possibilities exist as well for the network application **101***x* to support communication with a variety of different networks without departing from the scope of the present invention.

The left side of network application **101***x* in FIG. **3** for communication with the mobile network operator **104** can comprise communication through a radio **101***z* with the wireless network **102**, and the right side of network application **101***x* can comprise internal communication within module **101** as described in the paragraph above and also FIG. **1***e* above. The internal communication between network application **101***x* and eUICC **107** using an operating system **101***h* could comprise either (i) sharing memory **101***e*, where module **101** writes data such as, but not limited to, an exemplary RAND **118** value and eUICC **107** reads the values from the shared memory **101***e*, or (ii) using loopback UDP ports within operating system **101***h*, such that network application **101***x* sends a UDP datagram with the RAND **118** value using a first UPD loopback port, and the eUICC **107** receives the UDP datagram with the RAND **118** value using a second UDP loopback port. For an operating system **101***h* within module **101** using IPv4 addresses, the addresses used for the UDP loopback ports could comprise addresses in the range of the 127.0.0.0/8 address block. For an operating system **101***h* within module **101** using IPv6 addresses, the addresses used for the UDP loopback ports could comprise an ::1 address. In another embodiment illustrated in FIG. **1***f* above, the eUICC **107** can communicate with the MNO **104** directly for embodiments where the eUICC **107** includes an IP address **106***c*.

At a step **301**, a module **101** can record an eUICC identity **107***a*, an address **109***a* of an eUICC subscription manager **109**, and an eUICC private key **215** associated with the eUICC **107**. A manufacturer, distributor, technician, end user, or installer of module **101** could record the data for a step **301** in module **101**, or the data could be downloaded or accessed separately via an IP network **111**, including the public Internet. Other data could be included in a step **301** as well, such as, but not limited to, the software or firmware comprising the eUICC **107**, an eUICC profile key **107***b*, an eUICC public key **214**, an eUICC subscription manager public key **220**, an eUICC driver **128**, an initial profile **107***d* or **107***c*, and policy rules for allowing access to the profiles, and other additional data could be included in a step **301** as well. Additional optional data for recording with an eUICC **107** in a step **301** are depicted on the second line of step **301** in FIG. **3**.

In an exemplary embodiment, a manufacturer of module **101** records the exemplary data for an eUICC **107** in a step **301**, such that a module **101** can being operations and connecting to an initial wireless network **102** upon power-up in order to establish initial communications, including allowing the communication with the eUICC subscription manager **109** through the initial wireless network **102**. As noted above in this FIG. **3**, an initial wireless network **102** used for the eUICC **107** to access the eUICC subscription manager **109** can be different than the wireless network **102** used to access the mobile network operator **104**. The address

109*a* of an eUICC subscription manager **109** could comprise either an IP address or a domain name, and in an exemplary embodiment the address **109***a* comprises a domain name and the module **101** can query for the IP address associated with the domain name for address **109***a* via either a domain name system (DNS) query or a secured DNS query (DNSSEC). A module **101** can connect with an initial wireless network **102** (different than the depicted wireless network **102** in FIG. **3**) after a step **301** in order to communicate with an eUICC subscription manager **109**.

At a step **302***a*, an eUICC subscription manager **109** could record data for the eUICC **107**. The data could include (i) an eUICC identity **107***a*, (ii) a profile **107***c*, (iii) an eUICC public key **214**, (iv) an eUICC subscription manager public key **220** and private key **222**, (v) an eUICC profile key **107***b* with an associated eUICC profile identity **107***e*, (vii) a module identity **110** (for embodiments where the module identity **110** for the eUICC **107** is known before the eUICC **107** sends and receives data with the eUICC subscription manager **109**), (viii) and parameters for a symmetric ciphering algorithm **211** and an asymmetric ciphering algorithm **219** used by the eUICC **107**. The parameters for a symmetric ciphering algorithm **211** and an asymmetric ciphering algorithm **219** used by the eUICC **107** could specify the ciphers used, such as (i) selecting an exemplary 128 or 192 bit keys for use with an AES cipher for a symmetric ciphering algorithm **211** used with a eUICC **107** and eUICC identity **107***a*, and (ii) selecting an exemplary elliptic curve or RSA algorithm for use with an asymmetric ciphering algorithm **219**. The eUICC subscription manager **109** could also record related data for the operation of eUICC **107** with eUICC subscription manager **109** in a step **302***a*.

At a step **302***a*, the eUICC subscription manager **109** could receive the profile **107***d* from the mobile network operator **104**, and an exemplary profile **107***d* is depicted and described in connection with FIG. **2***a*. Or, eUICC subscription manager **109** could receive a subset of data for the exemplary profile **107***d* from the MNO **104** in a step **302***a* without receiving the entire profile **107***d*. As one example, the MNO **104** may not know the eUICC profile identity **107***e* for the eUICC profile **107***d*, and thus the MNO **104** may not send the complete profile **107***d* but the MNO **104** could send data for the profile **107***d* to the eUICC subscription manager **109** in a step **302***a*. In an exemplary embodiment, the eUICC subscription manager **109** could receive a subset of data for the profile **107***d* using the IP network **111** over a secured link or connection to the MNO **104**. The profile **107***d* in a step **302***a* could include both ciphertext **208***b* and plaintext of a set of network parameters **201**, a first network module identity **202**, and a first key K **203**. As depicted and described in connection with FIG. **2***a*, the ciphertext **208***b* could comprise an encrypted second key K **204***a*. The ciphertext **208***b* could also include the second network module identity **209***a*. In an exemplary embodiment, the plaintext first key K **203** could be optionally omitted from being received from an MNO **104** in a step **302***a*, and the eUICC subscription manager **109** can receive the first key K **203** in the form of a ciphertext **208***c* below in a step **302***b*. The eUICC subscription manager **109** could use a server or a plurality of servers similar to a server **105** in order to take the processing and communication steps described herein for an eUICC subscription manager **109** in this step **302***a* and also additional steps for an eUICC subscription manager **109** described throughout FIG. **3**.

After a module **101** powers up and established connectivity with the IP network **111**, an eUICC **107** operating in a module **101** could then perform a step **205** in order to receive an eUICC profile **107***c* using the IP network **111**. The use and operation of a step **205** is also depicted and described in connection with FIG. **2***a* above. In a step **205**, an eUICC **107** could send an eUICC identity **107***a* to the eUICC subscription manager **109**. The module **101** could use a network application **101***x* to send the eUICC identity **107***a*, such as the network application **101***x* writing data with the eUICC identity **107***a* to a physical interface **101***a*, and the physical interface **101***a* could include a radio **101***z*. Or, using the exemplary embodiment illustrated in FIG. **1***f* above, the eUICC **107** could be associated with an IP address **106***c*, and the eUICC **107** could send the eUICC identity **107***a* to the eUICC subscription manager **109** without using a separate network application **101***x* associated with the wireless network **102**. During a step **205** for a module **101** or eUICC **107**, an eUICC subscription manager **109** could receive the eUICC identity **107***a* and perform a step **302***b*. In an exemplary embodiment, both a module identity **110** and an eUICC identity **107***a* could be sent by an eUICC **107** or a module **101** in a step **205**. Or, the eUICC identity **107***a* could comprise a module identity **110**, and the module identity **110** could be sent in a step **205**. Other possibilities exist as well for identifying a module **101** or an eUICC **107** with an eUICC subscription manager **109** without departing from the scope of the present invention.

In an exemplary embodiment, a message with the eUICC identity **107***a* in a step **205** could include a digital signature, where the digital signature is processed using (i) the eUICC private key **215** recorded in a step **301** and (ii) a digital signature algorithm **221**. The message with the eUICC identity **107***a* and a digital signature in a step **205** could preferably include a random number or string, including a nonce or a "number used once" such as, but not limited to, an exemplary security token **212** in order to prevent replay attacks.

An eUICC subscription manager **109** can take several actions in a step **302***b* after receiving an identity for the eUICC **107** or module **101**. A first action in a step **302***b* could comprise authenticating an eUICC **107** or a module **101** based on the eUICC identity **107***a* received in the message. In a step **302***b*, eUICC subscription manager **109** can authenticate the message with eUICC identity **107***a* according to message digest, or using the eUICC profile key **107***b* which could be recorded in the eUICC **107** in a step **301** above. In addition, the eUICC subscription manager could authenticate using a digital signature algorithm **221**, where the message with the eUICC identity **107***a* could include a digital signature, as described in the paragraph above.

Both the eUICC **107** and the eUICC subscription manager **109** could use the eUICC profile key **107***b* as a cipher key with a symmetric ciphering algorithm **211** to encrypt/decrypt data sent with the eUICC identity **107***a*, where the successful encryption and decryption of data with eUICC identity **107***a* using the eUICC profile key **107***b* on both ends could be confirmation that the eUICC **107** or module **101** is authenticated, since both parties would only be able to mutually successfully encrypt and decrypt by sharing the same eUICC profile key **107***b*. In another embodiment, the eUICC profile key **107***b* could be used as a private key with a digital signature algorithm **211** (instead of the eUICC private key **215**), in order for the eUICC **107** with the eUICC **107***a* to be authenticated. For embodiments where the module **101** with the eUICC **107** sends a digital signature with the eUICC identity **107***a*, the eUICC subscription manager **109** could use the eUICC identity **107***a* to select the eUICC public key **214** or eUICC profile key **107***b* from a database. In this manner, the eUICC subscription manager **109** could com-

municate with a plurality of eUICCs **107** and select the appropriate keys using the eUICC identity **107***a*.

A second action in a step **302***b* could comprise the eUICC subscription manager **109** authenticating with an eUICC **107** or a module **101**. The eUICC subscription manager **109** could also authenticate with an eUICC **107** at a step **302***b* within a step **205**, such that eUICC **107** can confirm an identity of the eUICC subscription manager **109**, using any of the same or equivalent steps described in the paragraph above for an eUICC **107** to authenticate with an eUICC subscription manager **109**. The eUICC subscription manager **109** could send the eUICC **107** a digital signature processed using a digital signature algorithm **221** and the eUICC subscription manager private key **222**. The eUICC **107** could verify the digital signature using a eUICC subscription manager public key **220** (which could be recorded with an eUICC **107** in a step **301**). The eUICC **107** could also receive data encrypted with a eUICC profile key **107***b*, and successful decryption of the data by the eUICC **107** using a symmetric ciphering algorithm **211** could confirm the eUICC subscription manager **109** also holds the eUICC profile key **107***b*. Note that a system **300** could include multiple eUICC keys **107***b*, such that a first eUICC profile key **107***b* is used with a step **301** and step **205** in FIG. **3**, and a second eUICC profile key **107***b* could be used with a subsequent step **206** below. Other possibilities exist as well for an eUICC **107** and an eUICC subscription manager **109** to perform a 2-way authentication in a step **205** and a step **302***b* in FIG. **3** without departing from the scope of the present invention.

In another exemplary embodiment, where data received from an MNO **104** does not include a plaintext first key K **203** for inclusion in a profile **107***d*, for a third action in a step **302***b*, the eUICC subscription manager **109** could send the eUICC identity **107***a* (or the module identity **110**) and the eUICC public key **214** to the MNO **104**. In this embodiment, the MNO **104** could also use the key ciphering algorithm **216** depicted and described in connection with FIG. **2***e* above in order to encrypt the first key K **203** with the eUICC public key **214**. The output of an MNO **104** using a key ciphering algorithm **216** could comprise a ciphertext **208***c* of an encrypted first key K **203**. Thus, at a step **302***b* for the embodiment described in this paragraph, the eUICC subscription manager **109** could receive the first key K **203** for a profile **107***d* as ciphertext **208***c* (instead of a plaintext first key K **203** for profile **107***d* in FIG. **2***a*), In this manner, the first key K **203** in a profile **107***d* could be recorded as ciphertext **208***c*, which is also depicted and described as an optional format for the first key K **203** in FIG. **2***a* and FIG. **2***e*.

In an exemplary embodiment, the MNO **104** can send the ciphertext **208***c* only after a user **113** conducts a separate authentication step **308***b* below. In other words, a step **308***b* could also be used concurrently with a step **302***b*, where the step **302***b* includes the receipt of an encrypted first key K **203** in a ciphertext **208***c*. In this manner, the MNO **104** can retain control over the release of an encrypted first key K **203**, such that the first key K **203** in a ciphertext **208***c* is only received by an eUICC subscription manager **109** in a step **302** or a eUICC **107** in a step **205** after a user **113** (associated with the module **101** with the eUICC **107**) authenticates with the MNO **104**. In this embodiment, a separate authentication step **308***b* below can be optionally omitted, and the use of an encrypted second key K **204***a* in ciphertext **208***b* can also be omitted. In this embodiment, a user **113** of the module **101** can access the wireless network **102** of the mobile network operator **104** using the first key K **203** which has been (i) encrypted by the mobile network operator **104** using a key ciphering algorithm **216** in a step **302***b*, and (ii) only available to module **101** or eUICC **107** (or eUICC subscription manager **109**) after a user **113** conducts an authentication step **308***b* with MNO **104**.

After the eUICC subscription manager **109** receives and/or processes all the data for a profile **107***d*, including subsets of data from a MNO **104** described for this step **302***b* above, a fourth action in a step **302***b* could comprise the eUICC subscription manager **109** ciphering a profile **107***d* using a profile ciphering algorithm **210**, in order to convert profile **107***d* with plaintext into a profile **107***c* with ciphertext. Some elements in a profile **107***c* could remain plaintext as well, such as the exemplary profile identity **107***e*. The eUICC subscription manager **109** could use an eUICC profile key **107***b*, where the eUICC profile key **107***b* in a profile ciphering algorithm **210** can be different than an eUICC profile key **107***b* used to authenticate eUICC **107** with eUICC identity **107***a*. Or, the same eUICC profile key **107***b* could be used to both cipher profile **107***d* and authenticate eUICC **107**. Note that this fourth action in a step **302***b* could also take place at an earlier time than at step **302***b*, such that eUICC subscription manager **109** could assemble and cipher the profile **107***d* into a profile **107***c* at an earlier time, such as before receiving the eUICC identity **107***a*, or concurrent with a step **301***a*. Other possibilities exist as well for the timing and sequence for an eUICC subscription manager to assemble and process a profile **107***c* without departing from the scope of the present invention.

After a step **302***b*, the eUICC subscription manager **109** can send the authenticated eUICC **107** a profile **107***c* in a step **205**, as depicted in FIG. **3**. Either the eUICC subscription manger **109** or the eUICC **107** can select the profile **107***c* to be received by the eUICC **107**. In one embodiment, a module **101** can search for radio beacons from base stations **103** for wireless networks **102** surrounding the module **101**, and upon finding new possible wireless network **102** to connect with, the module **101** or eUICC **107** could query or request the eUICC subscription manager **109** for a profile **107***c* associated with a mobile network operator **104** for a radio beacon observed by the module **101**. Commercial business arrangements among the user of module **101**, the eUICC subscription manager **109**, and the mobile network operator **104** can determine the availability of a profile **107***c* for a module **101** with an eUICC **107**.

In another embodiment, the eUICC subscription manager **109** could periodically send the module **101** and/or eUICC **107** new profiles **107***c* as they become available to a user **113** of a module **101** or available to the eUICC subscription manager **109**. In a preferred embodiment, the eUICC subscription manager **109** can send the profile **107***c* to the module **101** using a network application **101***x*, where the network application **101***x* forwards the data to the eUICC **107**. As described above in this FIG. **3**, the network application **101***x* could communicate with the eUICC **107** using the operating system **101***h* as illustrated in FIG. **1***e*, and other possibilities exist as well. Note that eUICC subscription manager **109** sends the profile **107***c*, where the network access credentials (including the first key K **203**) are encrypted with an eUICC profile key **107***b*, and in this manner intermediate nodes on the IP network **111** would not feasibly be able to read the data within the profile **107***c*.

In an exemplary embodiment, the eUICC subscription manager **109** can send the module **101** a pointer, uniform resource locator (URL), domain name, or related address for a location of the eUICC profile **107***c* in a step **205** as opposed to the actual, full profile **107***c*. In this embodiment, the

module **101** could receive the pointer, uniform resource locator, domain name, or related address for the location of the eUICC profile **107***c* and subsequently download the eUICC profile **107***c* from an IP address associated with the pointer, uniform resource locator, domain name, or related address for a location of the eUICC profile **107***c*.

As depicted in FIG. **3**, after receiving the profile **107***c* from the eUICC subscription manager **109** in a step **205**, the eUICC **107** can receive data for decrypting the profile **107***c* in a step **303**. Note that if eUICC profile key **107***b* (in the form of a symmetric key as illustrated in FIG. **2***b*) has already be shared between the eUICC **107** and the eUICC subscription manager **109** before a step **206** below, then a step **303** could separately be omitted. For example, if an eUICC profile key **107***b* has been recorded with an eUICC **107** in a module **101** by a manufacturer of module **101**, then that eUICC profile key **107***b* could be used in a step **206** below, and a separate step **303** could be omitted. In other exemplary embodiments, the eUICC **107** can receive data for processing or deriving the eUICC profile key **107***b* for a step **206** below using the step **303** illustrated in FIG. **3**. A step **303** can include the receipt by eUICC **107** of either (i) an encrypted eUICC key **218**, or (ii) data for a key exchange. The encrypted eUICC key **218** received by an eUICC **107** in a step **303** could comprise an eUICC profile key **107***b* that is ciphered using a key ciphering algorithm **216** illustrated in FIG. **2***e*. For embodiments where data for a key exchange is received in a step **303**, the algorithms used with a key exchange could comprise a Diffie Hellman key exchange, or an Elliptic Curve Diffie Hellman key exchange (ECDH).

An eUICC **107** within a module **101** could use a ECDH key exchange in a step **303** when ECC algorithms are utilized for eUICC public key **214**, eUICC private key **215**, and eUICC subscription manager private key **222** and eUICC subscription manager public key **220**. A summary of ECDH is included in the Wikipedia article titled "Elliptic Curve Diffie-Hellman" (http://en.wikipedia.org/wiki/Elliptic_curve_Diffie %E2%80%93Hellman from Sep. 24, 2013, which is herein incorporated by reference. An ECDH key exchange in a step **303** could comprise the message received by a eUICC **107** including a common base point G. The base point G could also be sent from an eUICC **107** to eUICC subscription manager **109**. The base point G for an ECDH key exchange in a step **303** could also be recorded with the eUICC in a step **301** above, and in this case the message at a step **303** received by an eUICC **107** could comprise a signal to initiate or use a key exchange for deriving the eUICC profile key **107***b*. Note that the eUICC subscription manager **109** and the eUICC **107** could take additional steps to process the eUICC profile key **107***b* after an ECDH key exchange at step **303**, such as taking the output of an ECDH key exchange and inputting that output into a secure hash algorithm in order to obtain the eUICC profile key **107***b*. Other algorithms besides an ECDH or Diffie Hellman key exchange can be utilized as well at a step **303**, including a key exchange according to the American National Standards Institute (ANSI) standard X-9.63.

After completing a step **303**, an eUICC **107** operating in a module **101** could read and utilize the eUICC profile key **107***b*. In embodiments where the eUICC profile key **107***b* in a step **303** above comprises an encrypted eUICC key **218**, a step **217** from FIG. **2***e* can be utilized by the eUICC **107** in order to decrypt the eUICC key **218** into a plaintext of eUICC profile key **107***b*. The plaintext eUICC profile key **107***b* can be used by the eUICC **107** in a step **206** to decrypt (x) the profile **107***c* received in a step **205** above into (y) a profile **107***d*. The use of an eUICC profile key **107***b* for a step **206** is also depicted and described in connection with FIG. **2***a* above and also FIG. **2***b*. Plaintext within a profile **107***d* can be read after a step **206**, although in exemplary embodiments and as illustrated in FIG. **2***a*, the profile **107***d* can continue to record ciphertext **208***b* and ciphertext **208***c*.

In an exemplary embodiment, after a step **206** in FIG. **3** to convert received profile **107***c* to profile **107***d*, if (A) a ciphertext **208***c* that includes the first key K **203** is present in profile **107***d* (as depicted in FIG. **2***a* above), then (B) eUICC **107** could also use a key deciphering algorithm **217** on ciphertext **208***c* in order to extract the plaintext first key K **203**. Note that ciphertext **208***a* could be ciphered by an eUICC subscription manager **109** (using a profile ciphering algorithm **210**) and ciphertext **208***b* and/or ciphertext **208***c* could be encrypted by a mobile network operator **104** (using a key ciphering algorithm **216**). In other words, a module **101** with an eUICC **107** can use (i) a profile deciphering algorithm **206** with an eUICC profile key **107***b* to decrypt ciphertext **208***a*, (ii) a key deciphering algorithm **217** with an eUICC private key **215** to decrypt ciphertext **208***c*, and/or (ii) a key K deciphering algorithm **207** with a symmetric key **127** to decrypt ciphertext **208***b*.

After reading plaintext in profile **107***d*, module **101** could then utilize the profile **107***d* to conduct a first authentication **304** with the mobile network operator **104**. As depicted in FIG. **3**, the first authentication **304** can comprise (i) module **101** sending an attach message **305** with network module identity **202**, (ii) the eUICC **107** and module **101** receiving a RAND **118**, (iii) the eUICC **107** using a step **306** in order to calculate a RES **119**, and (iv) the module **101** sending the RES **119**. Although not illustrated in FIG. **3**, a first authentication **304** could include other data such as receiving the equivalent of an "OK" message upon successful authentication, the receipt of additional network parameters **202** after successful authentication, etc. The module **101** can use a profile **107***d* from a step **206** above in order to conduct the first authentication **304**. The profile **107***d* in an eUICC **107** could be selected and activated in order to connect with a wireless network **102** associated with mobile network operator **104**. As contemplated herein and throughout the present invention, an activated profile **107***d* can comprise a selected and enabled network access application state as illustrated in Figure D.1 of ETSI TS 103 383 v.2013-02 for the activated profile **107***d*, and other possibilities exist as well. As illustrated in FIG. **3** after a step **206**, the module **101** can use a network application **101***x* in order to attach to the wireless network **102** and communicate with the mobile network operator **104**.

Within a first authentication **304**, the module **101** can send a first attach message **305**, and the first attach message **305** can include the first network module identity **202**. With a 4G LTE network, the first attach message **305** could comprise a radio resource connection request message, or a similar message could be utilized with other wireless networking standards as well, such as LTE Advanced or WiMAX. An exemplary radio resource connection request is described in section 5.3.3 within ETSI TS 136 331 v.10.7 entitled "LTE; Evolved Universal Terrestrial Radio Access (E-UTRA); Radio Resource Control (RRC); Protocol Specification", which is herein incorporated by reference. Although not illustrated in FIG. **3**, the module **101** and wireless network **102**/mobile operator **104** could take additional related steps before sending the exemplary first attach message **305**, such as, but not limited to, module **101** synchronizing a clock **160** with wireless network **102**, module **101** sending a message

on a random access control channel (RACH) in order to have a timeslot and frequencies for sending the first attach message **305**, etc.

As depicted in FIG. **3**, after receiving and processing the first attach message **305**, the mobile network operator can send a first random number (RAND) **118**. Although not illustrated in FIG. **3**, a network authentication token "AUTN" and a sequence number could be sent with the first RAND **118**. An exemplary format for the use of a RAND **118** with a response RES **119** is described in ETSI standard TR 131 900 v.10.0.0 and related documents. In a first authentication **304** the module **101** and the eUICC **107** can receive the first RAND **118**. The eUICC **107** can conduct a step **306** with an input of the first RAND **118** and the first key K **203** in order to calculate a first RES **119**. The use of a RAND **118** with a RES **119** in a step **306** could comprise a general use of a message digest authentication, and another exemplary message digest authentication is also described in IETF RFC 2617, titled "HTTP Authentication: Basic and Digest Access Authentication". After receiving the exemplary first RAND **118** message, in order to conduct a first authentication **304**, module **101** using an eUICC **107** could take steps to demonstrate to MNO **104** that module **101** has access to the same first key K **203** as recorded by the MNO **104** in a step **302***a* or step **302***b* above. MNO **104** could record the expected RES **119** value with a set of authentication vectors **117** for the first network module identity **202**, as depicted in FIG. **1***d* and FIG. **1***e*.

Module **101** can properly respond to a challenge/nonce (such as a first RAND **118**) in a message digest authentication by sending a secure hash value calculated using (i) the challenge/nonce and (ii) the first key K **203**. The secure hash value can comprise the first RES **119**. In exemplary embodiments, eUICC **107** and wireless network **102** could use algorithms specified in ETSI TS 135 205-209, as well as subsequent and related standards, in order for module **101** using eUICC **107** to (i) calculate a secure hash value, and (ii) process related steps for a first authentication **304**. After processing a first RES **119** in a step **306** using the first key K **203**, the eUICC **107** could send the first RES **119** to the network application **101***x* in module **101**. Module **101** could then send the first RES **119** to the mobile network operator **104** using the wireless network **102**, as depicted in FIG. **3** and thereby complete a first authentication step **304** for the module **101**.

In another embodiment for a first authentication step **304**, (i) module **101** could send (i) the first network module identity **202** a digital signature processed using a digital signature algorithm **221** and the eUICC private key **215**, and (ii) MNO **104** could verify the digital signature using a digital signature algorithm **221** and the eUICC public key **214**. Other possibilities exist as well for steps within a first authentication **304** using a eUICC private key **215** with the first network module identity **202** or the eUICC identity **107***a* in a first authentication step **304** without departing from the scope of the present invention. In an exemplary embodiment, as depicted in FIG. **1***f* above, the eUICC **107** could include an IP address **106***c* with an interface identifier **106***e* associated with the eUICC **107**, and in this case the module **101** could send the first RES **119** value from the eUICC **107** to the MNO **104** through the wireless network **102**.

In a step **308***a* the mobile network operator **104** can receive the first RES **119**. A server **105** such as a mobility management entity (MME) for the mobile operator network **104** associated with the wireless network **102** could compare the received first RES **119** with an internally recorded RES **119** from the authentication vector **117**. As noted above, the authentication vector **117** could be received by the server **105** from the HSS of the mobile network operator **104** before a step **308***a*. If the received first RES **119** matches the internally stored first RES **119** value, the wireless network **102** and mobile network operator **104** can consider or process that the module **101** is authenticated for a step **308***a*. The wireless network **102**, the MNO **104**, and the module **101** can take subsequent steps (not shown) for the module **101** to access the IP network **111**, in order to conduct authentication of the module **101** or a user associated with the module **101** with a second factor in a step **308***b* below.

In a step **308***b*, the mobile network operator **104** can conduct a separate authentication of either a user **113** associated with a module **101** or the module **101** using a second factor. In other words, the mobile network operator **104** can use a step **308***b* to authenticate the user **113** of module **101** or the module **101** using steps and a process that is different than the first authentication **304**. Note that this use of a separate authentication step **308***b* can be different than conventional technology used in authenticating a module **101** in a step **304**, since other values and tokens besides the first key K **203** can be used in the authentication step **308***b*. The additional authentication step **308***b* can be useful for a mobile network operator **104** to authenticate a module **101** with an eUICC **107** and profile **107***d*, since the profile **107***d* with the first key K **203** may be transferred to module **101** in a communications channel outside the control of mobile network operator **104**. As one example, the profile **107***d* with the first network key K **203** could be transferred to an eUICC **107** from the eUICC subscription manager **109** using an IP network **111**, as depicted in FIG. **3** in a step **205**. The mobile network operator **104** may not have control over the IP network **111** used in a step **205**. The mobile network operator **104** may not have control over the security keys and algorithms used to encrypt the profile **107***d* into a profile **107***c*, and thus the security of the first key K **203** upon which the MNO **104** depends for authentication and ciphering of data with module **101** may be outside the control of MNO **104**. As one example, the MNO **104** may not be able to separately authenticate the identity of a user of module **101** with the eUICC **107**, before the profile **107***d* was received by module **101** and eUICC **107** in a step **205**.

Consequently, without a separate authentication step **308***b* the user **113** of module **101** with the eUICC **107** may be unknown to MNO **104**, and a separate identity of the user **113** or module **101** (other than network module identity **202**) may preferably be authenticated in a step **308***b*. Thus, a MNO **104** may use a separate authentication step **308***b* in order to authenticate a user **113** of module **101** with the eUICC **107** and the first key K **203** in exemplary embodiments. The user **113** can have a contractual or business relationship with MNO **104** in order to pay for voice and/or data services from the MNO **104**, and thus the MNO **104** can preferably identify and authenticate a user **113** in a step **308***b*.

A step **308***b* can comprise the authentication and/or secure identification of (i) a user **113** of module **101** or (ii) module **101** using a second factor. Although a step **308***b* is depicted in FIG. **3** as being performed after a first authentication **304**, a step **308***b* could be performed before a step **304** (including with a step **302***b* as described in step **302***b* above). The use of a second factor in an authentication step **308***b* can comprise a two-factor authentication, where the first factor can be the successful completion of authentication using a step **304** and step **308***a* described above. The steps for authenticating a user **113** or module **101** in a step **308***b* could

comprise many different forms without departing from the scope of the present invention. In one embodiment, where the user **113** of module **101** comprises a subscriber to telecommunication and data services from MNO **104**, the user **113** could present identification to a representative of the MNO **104** in a step **308***b*. The identification could be in the form of a physical identity such as, but not limited to, a drivers license or a passport (along with a value that can be associated with the eUICC profile **107***d* such as the module identity **110** or the eUICC identity **107***a*). The representative of the MNO **104** could record the identification in a web browser with connectivity to a database shared by a server **105**.

In another embodiment of an authentication of a user **113** of module **101** (with the eUICC profile **107***d* recorded with an eUICC **107** in module **101** from a step **205**) could enter information into a web page provided by MNO **104**, where the user **113** first (i) authenticates on the web page and then (i) enters identification information for the module **101** or eUICC **107**. The user **113** could first authenticate with the MNO **104** via a web page by entering a valid identity and a password (where the identity and password for the web page in a step **308***b* could be previously established between the user **113** and the MNO **104** before a step **308***b*). In another embodiment for a step **308***b*, a user **113** could call a telephone number operated by or associated with a MNO **104** and provide identification information via voice or entering information such as dual-tone multi-frequency (DTMF) digits via interactive voice response (IVR). The identification information could include either a credit card number or a personal identification number (PIN) for the user **113** (where the PIN may be previously shared or established between the user **113** and the mobile network operator **104**). The user **113** could also send a text message to MNO **104** from module **101** (*i*) using the module **101** authenticated link with MNO **104** established in a first authentication **304**, where (ii) the text message include identification information for a user **113**.

In accordance with preferred exemplary embodiments for the verification of an identity of user **113** in a step **308***b* (including an authentication of user **113** in a step **308***b*), the user **113** can send data to a MNO **104** from module **101** using a data connection via wireless network **102** associated with (and established after) the first authentication **304**. In this manner, data and voice connectivity between the MNO **104** and module **101** could be established with a first authentication step **304**, and the user **113** and MNO **104** can conduct an authentication step **308***b* (or equivalently a verification of an identity of the user **113**) to confirm the identity of the user **113** via the established data and voice connectivity using the wireless network **102**. In other words, the user **113** could verify or authenticate an identity of the user **113** of module **101** through the wireless network **102** in a step **308***b*, where (a) module **101** had conducted a first authentication step **304** and **308***a* with MNO **104** using the first key K **203** recorded in a profile **107***d*, in order to (b) support or conduct a separate verification or authentication of a user **113**. In an exemplary embodiment, the user **113** could enter identifying information for a step **308***b* in a web page accessed through a user interface **101***j* on module **101**, where data connectivity for the web page is provided to module **101** through the wireless network **102** after a first authentication step **304**.

The authentication or verification of user **113** identity in a step **308***b* can comprise authenticating module **101** with a second factor, where the first factor can comprise the first key K **203** and the second factor can comprise information provided by a user **113** in a step **308***b*. Other possibilities exist as well for those of ordinary skill in the art for (a) a user **113** of module **101** with the first key K **203** to (b) authenticate or verify an identity of the user **113** in a step **308***b* without departing from the scope of the present invention. In these exemplary embodiments for a user **113** to authenticate or verify an identity for the user **113** for module **101** with the MNO **104**, the MNO **104** could record information or data received from the user **113** in a database, such that a server **105** for MNO **104** sends the symmetric key **127** in a step **309** below after an identity of the user **113** is verified or authenticated in a step **308***b*. In exemplary embodiments illustrated in FIG. **3**, the module **101** can access the wireless network **102** with the first key K **203** in order to (i) establish communication with the IP network **111**, (ii) support authentication of a user **113** in a step **308***b* through the IP network **111**, and then (iii) subsequently receive a symmetric key **127** in order to decrypt a ciphertext **208***b* with a second key K **204***a*.

In other exemplary embodiments, module **101** could comprise a module supporting "machine-to-machine" applications and communications, and the module could be different than a traditional mobile phone or smartphone for (i) placing voice telephone calls or (ii) supporting a user interface **101***j* in the form of a touch screen and web browser. The module **101** could include a sensor **101***f* for collecting data and an actuator **101***y* for controlling or changing a state associated with a monitored unit for the module **101**. In these embodiments, and as depicted and described in connection with FIG. **1***a*, module **101** can be associated with an M2M service provider **115**, and the M2M service provider **115** could be associated with a plurality of modules **101**, as opposed to an individual with a telephone number for voice services to module **101**.

Each of the different modules **101** in the plurality of modules **101** could include different values for module identities **110**, eUICC identities **107***a*, profile identities **107***e*, and the first network module identities **202**. In these embodiments for a step **308***b* where the module **101** supports M2M applications for an M2M service provider **115**, in a step **308***b* in FIG. **3**, the MNO **104** could verify that (a) module **101** with eUICC **107** and the profile **107***d* from a step **304** is (b) properly associated with an M2M service provider **115**. In exemplary embodiments, the MNO **104** could conduct a step **308***b* by securely or properly determining that an identity from module **101** is associated with M2M service provider **115**, and an exemplary identity for module **101** include any of a module identity **110**, an eUICC identity **107***a*, a profile identity **107***e*, and/or the first network module identity **202**.

In exemplary embodiments where module **101** supports M2M application and the module **101** is associated with an M2M service provider **115**, MNO **104** could take several possible actions in a step **308***b* for authenticating or verifying that an identity from module **101** in FIG. **3** is associated with an M2M service provider **115**. The proper association of an identity of module **101** with M2M service provider **115** may be necessary or useful for contractual and business relationships between MNO **104** and M2M service provider **115**, such as, but not limited to, allowing MNO **104** to bill or invoice M2M service provider **115** for data services that MNO **104** provides to module **101**. In a first exemplary embodiment for a step **308***b* in FIG. **3** where module **101** supports M2M applications with a M2M service provider **115**, MNO **104** could securely send to M2M service provider **115** an identity of module **101**, such as, but not limited to module identity **110**, eUICC identity **107***a*, profile identity **107***e*, and/or the first network module identity **202** through

an IP network **111**. The MNO **104** could also send the identity of module **101** in a query or request message. Although not illustrated in FIG. **3**, the MNO **104** could also send the M2M service provider **115** a digital signature received from module **101** before a step **308***b*, where the digital signature was (i) processed by module **101** using a digital signature algorithm **221** and an eUICC private key **215**, and (ii) sent from the module **101** to the MNO **104**.

In a step **308***b*, the M2M service provider **115** could (i) receive the identity of module **101** (such as, but not limited to module identity **110**, eUICC identity **107***a*, profile identity **107***e*, and/or the first network module identity **202**), (ii) verify or determine the identity of module **101** properly belongs to M2M service provider **115**, and (iii) send a response confirming the module **101** with the identity is validly associated the M2M service provider **115**. The response from the M2M service provider **115** (or data within a message from M2M service provider **115** to MNO **114**) for a step **308***b* can comprise a second factor for MNO **104** in authenticating module **101** with eUICC **107** and profile **107***d*. In this manner, MNO **104** can confirm module **101** with the first network identity **202** is authenticated or verified as belonging to or being associated with M2M service provider **115** in a step **308***b*.

In another exemplary embodiment for a step **308***b*, the M2M service provider **115** could also send MNO **104** a list of pre-authorized identities for one or a plurality of modules **101** before a step **308***b* (and in this case the list can comprise the second factor to authenticate module **101**). MNO **104** could query the list of identities received upon receiving an identity of module **101**, such as, but not limited to, the first network module identity **202** received in the first attach message **305**. Other possibilities exist as well for an MNO **104** to authenticate or verify that an identity of module **101** is associated with a M2M service provider **115** in a step **308***b* without departing from the scope of the present invention.

After successfully verifying or confirming in a step **308***b* that module **101** in FIG. **3** is associated with a known user **113** or M2M service provider **115**, MNO **104** can send a symmetric key **127** in a step **309**. A network application **101***x* in the module **101** can receive the symmetric key **127** and the module **101** can forward the symmetric key **127** to the eUICC **107**. As depicted and described in connection with FIG. **2***a* and FIG. **2***c*, the symmetric key **127** can be used by module **101** to decrypt the ciphertext **208***b*, where the ciphertext **208***b* can include a second key K **204***a*. The symmetric key **127** can also previously be used by MNO **104** to encrypt the ciphertext **208***b*. The ciphertext **208***b* could be delivered to eUICC subscription manager **109** for including the ciphertext **208***b* in the profile **107***d*, as described above in step **302***a*. The ciphertext **208***b* could be sent to module **101** from the eUICC subscription manager **109** across the IP network **111** as profile **107***c* in a step **205** as described above in this FIG. **3**.

In exemplary embodiments, the MNO **104** can send the symmetric key **127** in a step **309** through the wireless network **102**, where the connection between module **101** and MNO **104** could be initiated by the first attach message **305** and authenticated by a first authentication **304**. Since the MNO **104** controls the nodes and ciphering steps for the transmission of symmetric key **127**, the symmetric key **127** can be securely sent by MNO **104** and received by module **101** with ciphering and keys used at the data-link layer under the control of MNO **104** (whereas MNO **104** may not control the keys and ciphering of sending the first key K **203**). Also note no entities, including the module **101**, a user **113**, an M2M service provider **115**, an eUICC subscription manager **109**, or unauthorized third parties could feasibly read the ciphertext **208***b* with the second key K **204***a* until they receive the symmetric key **127**.

In an exemplary embodiment of a step **309** in FIG. **3**, the symmetric key **127** can first be encrypted with a key ciphering algorithm **216**. An encrypted symmetric key **127** ciphered with the key ciphering algorithm **216** could be received by module **101** in a step **309**. As described in connection with a key ciphering algorithm **216** in FIG. **2***e*, the MNO **104** could select and read the eUICC public key **214** (using a received associated identity such as the first network module identity **202**), and use an asymmetric ciphering algorithm **219** to encrypt the symmetric key **127**. The module **101** could receive the encrypted symmetric key **127** and decrypt the symmetric key **127** in a step **309** by using a key deciphering algorithm **217** with the eUICC private key **215** and the asymmetric ciphering algorithm **219**. For a step **309** in FIG. **3**, the use of encryption for a symmetric key **127** with an asymmetric ciphering algorithm **219** is optional, and the symmetric key **127** could be sent in a form where encryption is applied at the data-link layer according to standards for the wireless network **102**. Other possibilities exist as well for a module **101** to securely receive a symmetric key **127** in a step **309** without departing from the scope of the present invention. As described above in connection with a step **302***b*, in exemplary embodiments, the module **101** receives the symmetric key **127** after the MNO **104** authenticates or verifies that a user **113** or M2N service provider **115** is associated with module **101**, and until the receipt of the symmetric key **127** the ciphertext **208***b* cannot be feasibly decrypted.

After a step **309**, a module **101** with an eUICC **107** can use the symmetric key **127** to decrypt ciphertext **208***b*, where ciphertext **208***b* can include the second key K **204***a*. A module **101** or eUICC **107** can use a key K deciphering algorithm **207** with input from the received symmetric key **127** and the ciphertext **208***b* from profile **107***d* to output a plaintext second key K **204**. Although not illustrated in a step **207** in FIG. **3**, but as illustrated in a step **207** in FIG. **2***a*, a module **101** can use an eUICC **107** to also decrypt a second network module identity **209***a* for the second key K **204** using the symmetric key **127**. The second network module identity **209***a* can be recorded in the ciphertext **208***b*. The second network module identity **209***a* can be different than the first network module identity **202**, such as a different number or value for an IMSI. The second network module identity **209***a* can be the same length as the first network module identity **202**. The use and operation of a key K deciphering algorithm **207** is also depicted and described in connection with FIG. **2***a* and FIG. **2***e* above.

The module **101** or eUICC **107** can record the plaintext second key K **204** in a nonvolatile memory such as, but not limited to, flash memory **101***w* such that the plaintext second key K **204** remains available to module **101** after power or a battery **101***k* is removed from module **101**. The plaintext second key K **204** could also be recorded in a protected memory within module **101**, such that the operating system **101***h* or CPU **101***b* may prevent read or write access to the protected memory by other processes than the eUICC **107**. In other words, with a protected memory, other applications such as, but not limited to, applications that are downloaded from an "app store" or equivalent and installed by end users on the module **101** may be prevented by the operating system **101***h* from having access to the plaintext second key K **204** recorded in the protected memory.

In another embodiment, a module **101** may optionally not store the plaintext second key K **204** in nonvolatile memory,

such that the second key K **204** continues to be recorded for a long-term basis only as ciphertext **208***b* in a nonvolatile memory such as flash **101***w*. The module **101** could perform a key K deciphering algorithm **207** each time a plaintext second key K **204** is needed for authentication purposes, including related key derivation of a CK and IK plus other derived keys. In this manner (by storing the second key K **204** in ciphertext **208***b* in module **101**) a plaintext second key K **204** may not be (i) stored in module **101** for a relatively long time such as several hours or longer, and also (ii) recorded outside a nonvolatile memory.

In another embodiment, (A) the plaintext second key K **204** is recorded only in a volatile memory within CPU **101***b* such as a register or cache memory, where access to the register or cache memory is limited to the eUICC **107**, and (B) after a successful authentication using the second key K **204**, such as, but not limited to, a second authentication **311** below, the plaintext second key K **204** is flushed from the register or cache memory within CPU **101***b*. In this manner, after (A) a first time that module **101** conducts a step **207** to obtain a plaintext second key K **204** and the module **101** completes a full power cycling, then (B) the plaintext second key K **204** may not be recorded in any of a volatile memory, a non-volatile memory, or a protected memory within module **101** (but module **101** could record an encrypted second key K **204***a* in a ciphertext **208***b*).

For the embodiments where the second key K **204** is not recorded as plaintext in a nonvolatile memory within module **101**, the module **101** can perform a step **207** with a ciphertext **208***b* recorded in a nonvolatile memory a second time to process or obtain the plaintext second key K **204**. In other words, the second key K **204** can be recorded on a long-term basis as a ciphertext **208***b* for eUICC **107** within module **101**, in an exemplary embodiment, thereby increasing the security of the second key K **204**. In this case, either (i) the symmetric key **127** could be recorded in a nonvolatile memory **101***w* in order to allow decrypting of the ciphertext **208***b*, or (ii) the module **101** could receive the symmetric key **127** a second time by conducting a step **309** a second time. The module **101** can reconnect with the wireless network **102** and the MNO **104** using the first network identity **202** and the first key K **203** a second time, after the module **101** has already received the symmetric key **127** a first time. The MNO **104** may optionally authenticate the user **113** or M2M service provider **115** a second time such as a second step **308***b* (before sending the symmetric key **127** a second time) in order to confirm a second use of the first key K **203** is authorized.

After a module **101** with an eUICC **107** processes a key K deciphering algorithm **207** to obtain a plaintext second key K **204**, the module **101** can connect with the wireless network **102** and mobile network operator **104** using the second network module identity **209** and the second network key **204**. The module **101** using a network application **101***x* could send a second attach message **305** with the second network module identity **209**. In another embodiment, the module **101** could send the second attach message **305** with the first network module identity **202**, and in this case the MNO **104** could record from the previous steps **302***b* and **308***b* that a key K associated with the first network module identity **202** should change to the second key K **204**.

But, given existing deployed infrastructure and systems for a mobile network operator **104**, the use of two different keys K with the same network module identity may be more difficult to support, and for this case and with preferred embodiments, the module **101** attaches with the MNO **104** the second time with the second network module identity **209** that has been deciphered from (i) a ciphertext **208***b* in a step **207** above, or (ii) a ciphertext **208***a* in a step **206** above. The second attach message **305** can be equivalent to the first attach message **305**, but with a change of module **101** sending the second network module identity **209**. With a 4G LTE network, the second attach message **305** could comprise a radio resource connection request message, or a similar message could be utilized with other wireless networking standards as well, such as LTE Advanced or WiMAX. An attach message such as **305** in FIG. **3** could also comprise module **101** using a globally unique temporary identity (GTUI) that can be associated with the second network module identity **209**. Other possibilities exist as well for the format or structure of an attach message **305** without departing from the scope of the present invention.

After sending the second attach message **305**, the module **101** with a eUICC **107** can conduct a second authentication **310** with the mobile network operator **104**. The module **101** and eUICC **107** could take the equivalent steps as the first authentication **304** depicted and described in this FIG. **3**, but with a difference of using the second network module identity **209** and the second key K **204**. In a second authentication **310**, the mobile network operator **104** could send the module **101** a second RAND value **118** through the wireless network **102**. A server **105** associated with MNO **104**, such as, but not limited to, a HSS could have previously processed an authentication vector **117** comprising at least (i) the second RAND value **118**, (ii) a network authentication token AUTN and sequence number (not shown), and (iii) a response value RES **119** for the second network module identity **209** and the second key K **204**. The server **105** or HSS associated with the MNO **104** could send the authentication vector **117** to a server or MME that module **101** communicates with through the wireless network **102**. The module **101** could receive the second RAND **118** using the network application **101***x*, and forward the second RAND **118** to the eUICC **107**. The communication steps between a network application **101***x* and an eUICC **107** in FIG. **3** could also use the steps depicted and described in connection with FIG. **1***e*.

At a step **311**, the eUICC **107** could calculate the second RES **119** using (i) the second RAND **118** received and (ii) the second key K **204**. After receiving the exemplary second RAND **118** message, in order to conduct a second authentication **310**, module **101** using an eUICC **107** could take steps to demonstrate to MNO **104** that module **101** has access to the same second key K **204** as recorded by the MNO **104** in an authentication vector **117**. The MNO could record the second key K **204** in an authentication vector **117** a step **302***a* or step **302***b* above. Module **101** can properly respond to a challenge/nonce (such as a second RAND **118**) in a message digest authentication by sending a secure hash value calculated using (i) the challenge/nonce and (ii) the second key K **204**. The secure hash value can comprise the second RES **119**. In exemplary embodiments, the eUICC **107** and wireless network **102** could use algorithms specified in ETSI TS 135 205-209, as well as subsequent and related standards, in order for module **101** using eUICC **107** to (i) calculate a secure hash value, and (ii) process related steps for a second authentication **310**. After processing a second RES **119** in a step **311** using the second key K **204**, the eUICC **107** could send the second RES **119** to the network application **101***x* in module **101**. Module **101** could then send the second RES **119** to the mobile network operator **104** using the wireless network **102**, as depicted in FIG. **3** and thereby complete a second authentication step **310** for the module **101**. In an exemplary embodiment, as depicted in

FIG. **1***f* above, the eUICC **107** could include an IP address **106***c* with an interface identifier **106***e* associated with the eUICC **107**, and in this case the module **101** could send the second RES **119** value from the eUICC **107** to the MNO **104** through the wireless network **102**.

At a step **312**, the mobile network operator can receive the second RES **119** from the module **101** using the wireless network **102**. A server **105** for the mobile operator network **104** associated with the wireless network **102** could compare the received second RES **119** with an internally recorded RES **119**. The server **105** could receive an authentication vector **117** comprising at least the second RAND **118**, second RES **119**, and AUTN token for the second network module identity **209** before sending the second RAND **118** in a step **310** above. If the received second RES **119** matches the internally stored second RES **119** value, the wireless network **102** and mobile network operator **104** can consider or process that the module **101** is authenticated for a step **312**. The wireless network **102**, the MNO **104**, and the module **101** can take subsequent steps (not shown) for the module **101** to access the IP network **111**, including allowing module **101** to place and receive telephone calls and/or access the public Internet.

In an exemplary embodiment that utilizes the steps illustrated in FIG. **3**, the first key K **203** can comprise a null value or the number zero, which is contemplated in standards and supported by commercial wireless networks **102** in order to support emergency services for a module **101** without a valid UICC or eUICC. The MNO **104** and wireless network **102** can provide limited access to the IP network **111**, such that a user **113** of module **101** with a null or zero value for the first key K **203** could performs steps to authenticate or verify the user **113** identity in a step **308***b*. The limited access to the IP network **111** may not include access to the public Internet, but could include access to a server such as a web server for the user **113** to enter identification information. The data-link layer may not be encrypted due to the use of a null value for the first key K **203**, but the application or transport layer could secure communication from a web browser on the module **101** to the web server, such as using transport layer security (TLS). Other possibilities exist as well for ciphering or securing data at the application or transport layer in a step **308***b* to authenticate a user **113** without encryption at the data-link layer (such as without encryption by the wireless network **102** due to a null value for first key K **203**). In this embodiment where the first key K **203** comprises a null or zero value, after authentication of a user **113** or M2M service provider **115** in a step **308***b*, the second key K **204** used with a second authentication **310** can comprise a regular key K such as a non-null value or a random number.

FIG. **4**

FIG. **4** is a flow chart illustrating exemplary steps for a module to use an eUICC and authenticate with a wireless network, in accordance with exemplary embodiments. The processes and operations, described below with respect to all of the logic flow diagrams may include the manipulation of signals by a processor and the maintenance of these signals within data structures resident in one or more memory storage devices. For the purposes of this discussion, a process can be generally conceived to be a sequence of computer-executed steps leading to a desired result.

These steps usually require physical manipulations of physical quantities. Usually, though not necessarily, these quantities take the form of electrical, magnetic, or optical signals capable of being stored, transferred, combined, compared, or otherwise manipulated. It is convention for those skilled in the art to refer to representations of these signals as bits, bytes, words, information, elements, symbols, characters, numbers, points, data, entries, objects, images, files, or the like. It should be kept in mind, however, that these and similar terms are associated with appropriate physical quantities for computer operations, and that these terms are merely conventional labels applied to physical quantities that exist within and during operation of the computer.

It should also be understood that manipulations within the computer are often referred to in terms such as listing, creating, adding, calculating, comparing, moving, receiving, determining, configuring, identifying, populating, loading, performing, executing, storing etc. that are often associated with manual operations performed by a human operator. The operations described herein can be machine operations performed in conjunction with various input provided by a human operator or user that interacts with the computer.

In addition, it should be understood that the programs, processes, methods, etc. described herein are not related or limited to any particular computer or apparatus. Rather, various types of general purpose machines may be used with the following process in accordance with the teachings described herein.

The present invention may comprise a computer program or hardware or a combination thereof which embodies the functions described herein and illustrated in the appended flow charts. However, it should be apparent that there could be many different ways of implementing the invention in computer programming or hardware design, and the invention should not be construed as limited to any one set of computer program instructions.

Further, a skilled programmer would be able to write such a computer program or identify the appropriate hardware circuits to implement the disclosed invention without difficulty based on the flow charts and associated description in the application text, for example. Therefore, disclosure of a particular set of program code instructions or detailed hardware devices is not considered necessary for an adequate understanding of how to make and use the invention. The inventive functionality of the claimed computer implemented processes will be explained in more detail in the following description in conjunction with the remaining Figures illustrating other process flows.

Further, certain steps in the processes or process flow described in all of the logic flow diagrams below must naturally precede others for the present invention to function as described. However, the present invention is not limited to the order of the steps described if such order or sequence does not alter the functionality of the present invention. That is, it is recognized that some steps may be performed before, after, or in parallel other steps without departing from the scope and spirit of the present invention.

The processes, operations, and steps performed by the hardware and software described in this document usually include the manipulation of signals by a CPU or remote server and the maintenance of these signals within data structures resident in one or more of the local or remote memory storage devices. Such data structures impose a physical organization upon the collection of data stored within a memory storage device and represent specific electrical or magnetic elements. These symbolic representations are the means used by those skilled in the art of computer programming and computer construction to most effectively convey teachings and discoveries to others skilled in the art.

At step **401**, a module **101** can connect with a first wireless network **102**. The first wireless network **102** could comprise a public land mobile network, a local area network

such as WiFi, or the use of white-space spectrum. The module **101** could connect with the first wireless network **102** in order to obtain access to IP network **111** which could comprise the public Internet, although the IP network **111** could comprise a private network in some embodiments. Although not depicted in FIG. **4**, a step **401** could also comprise the module **101** connecting to a wired network through USB interface **101***v*. Upon conclusion of a step **401** the module **101** can use an IP address such as IP address **106***b* in FIG. **1***f* in order to communicate with an eUICC subscription manager **109**. As illustrated in FIG. **1***f*, in an exemplary embodiment the eUICC **107** could also have an IP address **106***c* after a step **401**, although the use of an IP address for eUICC **107** is not required and the module **101** can be associated with one IP address for all external communications.

The module **101** can then use a step **205** in order to receive an eUICC profile **107***c*. The eUICC profile **107***c* could be received from the eUICC subscription manager **109** using the wireless network **102** and/or IP network **111** from a step **401** above. The module **101** could record the received eUICC profile **107***c* with the eUICC **107**, including sending the eUICC profile **107***c* to the eUICC **107** or sharing memory **101***e* or **101***w* between the eUICC **107** and a network application **101***x*. The module **101** could use a network application **101***x* in order to receive the eUICC profile **107** from the eUICC subscription manager in a step **205**, as depicted and described in connection with FIG. **3**. The module **101** with an eUICC **107** could then decrypt the profile **107***c* in a step **206** using an eUICC profile key **107***b*. The eUICC profile key **107***b* could be recorded with an eUICC **107** before a step **206**. The module **101** and/or eUICC **107** could receive the eUICC profile key **107***b* using a step **303** as depicted and described in connection with FIG. **3**. The eUICC profile key **107***b* could be received using a key exchange, such as a Diffie-Hellman key exchange or an ECDH key exchange. Or, the eUICC profile key **107***b* could be recorded with the eUICC **107** by a module manufacturer. Other possibilities exist as well for a module **101** to record an eUICC profile key **107***b* before a step **206** without departing from the scope of the present invention. A module **101** and/or an eUICC **107** could use a profile deciphering algorithm **206** in a step **206**, as depicted and described in connection with FIG. **2***a* and FIG. **2***b*. Upon conclusion of a step **206**, a profile **107***d* could be recorded in an eUICC **107**.

In a step **402**, a module **101** can then select and activate the profile **107***d* from a step **206** in order to connect with a second wireless network **102**. A module **101** could take several possible steps in order to select and activate the profile **107***d*. A module **101** could use radio **101***z* to search for radio beacons from base stations **103** for wireless networks **102** surrounding the module **101**, and upon finding the second wireless network **102** to connect with, the module **101** could select the profile **107***d*. The profile **107***d* could include values in the set of network parameters **201** that match or conform with values transmitted by the wireless network **102**, such as using the same mobile country code (MCC) and mobile network code (MNC) as recorded in the profile **107***d*. A module **101** could receive an instruction from an eUICC subscription manager **109** in order to activate the profile **107***d*, where the instruction could be received through the first wireless network **102** in a step **401** above.

In another embodiment, a module **101** or eUICC **107** could query the eUICC subscription manager **109** through the first wireless network **102** before activating the profile **107***d* in a step **402**. Commercial business arrangements among the user **113** of module **101**, the eUICC subscription manager **109**, and the mobile network operator **104** can determine the timing for activating a profile **107***d* for a module **101** with an eUICC **107** in a step **402**, such as a user **113** entering a new contract for service with a MNO **104** for the profile **107***d*. As contemplated herein and throughout the present invention, an activated profile **107***d* can comprise a selected and enabled network access application state as illustrated in Figure D.1 of ETSI TS 103 383 v.2013-02 for the activated profile **107***d*. Other possibilities exist as well for a module **101** to activate a profile **107***d* in a step **402** without departing from the scope of the present invention.

In a step **304** in FIG. **4**, a module **101** using eUICC **107** can conduct a first authentication **304** with the second wireless network **102**, using the first key K **203** recorded in the activated profile **107***d*. The module **101** could also send the first network module identity **202** from a profile **107***d* to the mobile network operator **104** in a step **304** in FIG. **4**. The second wireless network **102** in a step **304** in FIG. **4** can be associated with a mobile network operator **104**. The use of a first authentication **304** is also depicted and described in connection with FIG. **3** above. As noted in a first authentication **304**, the first key K **203** could comprise a key with a null value in an exemplary embodiment, although a random number could be used for a first key K **203** as well. As depicted in FIG. **4**, the steps **401** through **304** could comprise substeps within a step **403**. The combined substeps comprising a step **403** can be used by a module **101** in exemplary embodiments including an embodiment illustrated in FIG. **6** below.

Although not depicted in FIG. **4**, the mobile network operator **104** can conduct a separate step **308***b* to authenticate module **101** or a user **113** of module **101** using a second factor after a step **304**. As described in a step **308***b* above, the second factor could comprise verifying or authenticating an identity of a user **113** associated with module **101**. Note that the authentication of a user **113** can be conducted through the module **101** accessing a server **105** or a web page through the IP network **111** via the second wireless network **102** after the first authentication **304** using the first key K **203** (including embodiments where the first key K **203** comprises a null value).

In a step **309**, the module **101** can receive a key from the second wireless network. The key in a step **309**, as depicted in FIG. **3** above, can comprise a symmetric key **127** in order to decrypt a ciphertext **208***b* within profile **107***d*. As also contemplated and described in connection with a step **309** in FIG. **3**, the key could comprise a module **101** receiving a ciphertext that includes a symmetric key **127** that has been ciphered with a key ciphering algorithm **216** using an asymmetric ciphering algorithm **219** and the eUICC public key **214**, as illustrated in FIG. **2***e*. For a key ciphering algorithm **216** used with a step **309**, (i) the symmetric key **127** can comprise the plaintext (as opposed to the eUICC profile key **107***b* depicted in FIG. **2***e*), and (ii) the MNO **104** could operate the key ciphering algorithm **216** instead of the eUICC subscription manager **109** depicted. In this embodiment of a step **309**, a module **101** and/or an eUICC **107** could receive the key in the form of a ciphertext of symmetric key **127** in a step **309** and decrypt the ciphertext of symmetric key **127** with the eUICC private key **215** in order to read a plaintext symmetric key **127**.

In a step **207** in FIG. **4**, the module **101** and/or eUICC **107** can decrypt the ciphertext **208***b* with the second key K **204***a* using the symmetric key **127**. The module **101** can use a key K deciphering algorithm **207** as depicted and described in connection with FIG. **2***c* above in order to read and record

a plaintext second key K **204** from the ciphertext **208***b* in the profile **107***d*, where the profile **107***d* was previously decrypted and recorded using a step **206** above. As depicted in FIG. **2***a*, the ciphertext **208***b* can also include a second network module identity **209***a*, so the eUICC **107** can also read the plaintext second network module identity **209** in a step **207**, if a second network module identity **209***a* is included in a ciphertext **208***b*. In an exemplary embodiment, the second plaintext key K **204** is recorded in a protected, nonvolatile memory such as, but not limited to, a flash memory **101***w*. In this embodiment, the protected nonvolatile memory could comprise a memory address designated by the module **101**, CPU **101***b*, operating system **101***h*, a module program **101***i*, or the eUICC **107** as a memory address that can only be written and read by the eUICC **107**. Other possibilities exist as well to those of ordinary skill in the art for a plaintext second key K **204** to be recorded in a protected, nonvolatile memory in a step **207** without departing from the scope of the present invention.

In another embodiment, as described in a step **207** in FIG. **3**, the module **101** could record the encrypted second key K **204***a* in a nonvolatile memory, along with a symmetric key **127** (or an encrypted symmetric key **127** ciphered by a key ciphering algorithm **216**). The module **101** or eUICC **107** could decrypt the encrypted symmetric key **127** in order to decrypt the ciphertext **208***b* that contains the second key K **204***a* each time the module **101** or eUICC **107** needs to read a plaintext second key K **204** for an conducting an authentication step **310**, plus the subsequent derivation of additional keys such as CK and IK, Kasme, Kupenc, etc. using the plaintext second key K **204** and a RAND **118** value.

After reading a plaintext second key K **204** from a ciphertext **208***b* in a step **207** using the symmetric key **127**, the module **101** and/or eUICC **107** can conduct a second authentication **310** step using the plaintext second key K **204**, in order to authenticate with the second wireless network **102**. The second wireless network **102** can comprise the same wireless network **102** the module **101** communicates with in a step **304** above. The use of a plaintext second key K **204** in a second authentication **310** step is depicted and described in connection with FIG. **3**. Although not illustrated in FIG. **4**, the module **101** could send a detach message or equivalent to temporarily disconnect from the second wireless network **102** after a step **309** and before a step **310** illustrated in FIG. **4**. A step **310** can comprise the module **101** sending a radio resource connection request to the second wireless network **102** with a network module identity associated with the second key K **204**. A step **310** can be completed by a module **101** and/or an eUICC **107** sending a RES **119** value calculated using (i) a RAND **118** received and (ii) the second key K **204**.

Although not illustrated in FIG. **4**, after a step **310** by a module **101** and/or an eUICC **107**, the MNO **104** could verify the RES **119** and then the module **101** and the wireless network **102** associated with the MNO **104** could take subsequent steps for a module **101** to have access to the IP network **111** including the public Internet. The module **101** and/or eUICC **107** could derive session keys (such as, but not limited to a key CK) for encrypting data through the wireless network using a RAND **118** received in a step **310** and the second key K **204**, and the module **101** and/or eUICC **107** could also derive an integrity key for a session (such as, but not limited to, an integrity key IK). Using an authenticated module **101** from a step **310**, the MNO **104** can meter services rendered to a module **101** after a step **310** in order to bill or invoice a user **113** or M2M service provider **115**.

FIG. **5***a*

FIG. **5***a* is a graphical illustration of a public keys, private keys, and a key derivation algorithm, in accordance with exemplary embodiments. An eUICC **107** within a module **101** can include an eUICC private key **215**, which can be associated with an eUICC public key **214**. The eUICC private key **215** and eUICC public key **214** can comprise a public key infrastructure (PKI) key pair for eUICC **107**. The MNO **104** can record the eUICC public key **214** along with an eUICC identity **107***a*, such that the MNO **104** can properly associate one of a plurality of eUICC public keys **214** with the proper eUICC **107**. Although not illustrated in FIG. **5***a*, a MNO **104** could record the eUICC public key **214** and an associated eUICC identity **107***a* in a database. The MNO **104** could receive the eUICC public key **214** and the eUICC identity **107***a* from an eUICC subscription manager **109** through an IP network **111** in a step **302***a* or step **302***b* of FIG. **3**. The use of, source, and additional details regarding an eUICC public key **214** and eUICC private key **215** are also depicted and described in connection with FIG. **2***d* above.

The mobile network operator **104** could also be associated with an MNO private key **501** and an MNO public key **502**, which could comprise a PKI key pair for the mobile network operator. The mobile network operator **104** could process or derive the PKI key pair using steps and algorithms equivalent to the steps and algorithms for an eUICC **107** to obtain the eUICC public key **214** and eUICC private key **215**. The PKI keys depicted in FIG. **5***a* could be processed using RSA algorithms or elliptic curve cryptography (ECC) algorithms, and other possibilities exist as well for the format of PKI keys without departing from the scope of the present invention. The public keys in FIG. **5***a* can comprise keys recorded in an X.509 certificate, although the use of an X.509 certificates with public keys **214** and **502** are not required. The public key **214** and **502** in the form of an X.509 certificate can optionally be signed by a certificate authority. As illustrated in FIG. **5***a*, the mobile network operator public key **502** can be recorded in the eUICC profile **107***d*. The MNO **104** could send the MNO public key **502** to the eUICC subscription manager **109** in a step **302***a* or **302***b* depicted and described in FIG. **3**, and the eUICC subscription manager **109** could include the MNO public key **502** in the profile **107***d*. An eUICC profile **107***d* could also include the additional data for an eUICC profile **107***d* as depicted and described in FIG. **2***a*, in addition to the MNO public key **502**.

As illustrated in FIG. **5***a*, the MNO **104** and eUICC **107** can both record a key derivation algorithm **503**. Exemplary key derivation algorithm **503** could support a Diffie Hellman key exchange, an Elliptic Curve Diffie Hellman (ECDH) key exchange (ECDH), or similar algorithms for each node to mutually derive a key using public and private keys. For embodiments where (A) eUICC public key **214**, eUICC private key **215**, MNO public key **502**, and MNO private key **501** utilize (i) elliptic curve cryptography (ECC) and (ii) a common, shared elliptic curve, then (B) a key derivation algorithm **503** in FIG. **5***a* can comprise an algorithm for conducting an ECDH key exchange. The use of an ECDH key exchange was also described and contemplated between an eUICC subscription manager **109** and an eUICC **107** in step **303** in FIG. **3** above. For embodiments where a key derivation algorithm **503** supports a Diffie Hellman key exchange, the key derivation algorithm **503** could record a multiplicative group of integers modulo p, where p is prime, and g is a primitive root mod p. In exemplary embodiments, p can be sufficiently large, such as, but not limited to, and exemplary prime number of at least 250 digits, and g can be

a small number, such as, but not limited to, the number **5**. In exemplary embodiments, additional values pertaining to the operation of a key derivation algorithm **503** can be transferred between two nodes using a token **505** described in a FIG. **5***b* and FIG. **5***c* below.

FIG. **5***b*

FIG. **5***b* is a graphical illustration of deriving a second key K using public keys, private keys, and a key derivation algorithm, in accordance with exemplary embodiments. A mobile network operator **104** could process a MNO key exchange algorithm **504** in order to output or determine a second key K **204**. A module **101** with an eUICC **107** could process an eUICC key exchange algorithm **505** in order to output or determine the same second key K **204**. The MNO key exchange algorithm **504** and the eUICC key exchange algorithm **505** could include a key derivation algorithm **503**, and a key derivation algorithm **503** is also depicted and described in connection with FIG. **5***a* above. The MNO **104** and module **101** could share or communicate a key exchange token **506** in order to operate the key exchange algorithm **505**. In this manner, a module **101** with an eUICC **107** and a mobile network operator **104** could mutually derive or share the second key K **204** without MNO **104** transmitting or sending the second key K **204**, even in an encrypted form such as a second key K **204***a* in a ciphertext **208***b*, to either (i) eUICC subscription manager **109** in a step **302***a* or step **302***b*, or (ii) to a module **101** in a profile **107***c*.

For a MNO key exchange algorithm **504**, a mobile network operator **104** using a server **105** could input the mobile network operator private key **501**, the eUICC public key **214**, and a key exchange token **506** into a key derivation algorithm **503** in order to output the second key K **204**. Note that the key derivation algorithm **503** in both a MNO key exchange algorithm **504** and an eUICC key exchange algorithm **505** can include additional or separate processing steps than those contemplated in a Diffie-Hellman key exchange and an ECDH key exchange. Additional steps than those contemplated in a Diffie-Hellman key exchange or ECDH key exchange for a key derivation algorithm **503** include transforming key output by these key exchange protocols into a key length and format compatible and suitable for a key K for use with wireless networks. In a key derivation algorithm **503**, the output of a Diffie-Hellman key exchange and an ECDH key exchange could be input into a secure hash algorithm, such as SHA-256, which could then be truncated to select a 128 bit second key K **204** using a key derivation algorithm **503**. For a MNO key exchange algorithm **504**, the security key exchange token **506** can depend upon the algorithm used in a key derivation algorithm **503**.

For embodiments where key derivation algorithm **503** comprises a Diffie-Hellman key exchange, the key exchange token **506** can comprise integer values of p and g. Or, with a Diffie-Hellman key exchange the security key exchange token **506** sent from a MNO **104** could comprise a value equal to g^a mod p where (x) the values or p and g have been previously shared between MNO **104** and eUICC **107**, and (y) the value "a" can comprise the MNO private key **501**. A security key exchange token **506** received by MNO **104** for input into a key derivation algorithm for a eUICC **107** could comprise a value of g^b mod p, where b comprises the eUICC private key **215**. For embodiments where key derivation algorithm **503** comprises an ECDH key exchange, the key exchange token **506** can a common base point G. The base point G could also be (i) recorded in an eUICC profile **107***d*, or (ii) sent from a mobile network operator **104** to module **101**, or (iii) sent from the module **101** to the mobile network operator **104**. Other algorithms besides an ECDH or Diffie Hellman key exchange can be utilized as well at a step **503**, including a key exchange according to the American National Standards Institute (ANSI) standard X-9.63, and a key exchange token **506** could include a number or value associated with these other algorithms for a key derivation algorithm **503**.

For an eUICC key exchange algorithm **505**, a module **101** with an eUICC **107** could input the eUICC private key **215** and the mobile network operator public key **502** into a key derivation algorithm **503**. Note that the input into the key derivation algorithm **503** could also optionally include a key exchange token **506**. The key derivation algorithm **503** in an eUICC key exchange algorithm **505** could accept the input and output the second key K **204**. The key derivation algorithm **503** in an eUICC key exchange algorithm **505** could be equivalent to the key derivation algorithm **503** in a MNO key exchange algorithm **504** described above. The key exchange token **506** in an eUICC key exchange algorithm **505** could comprise a value similar to the key exchange token **506** used in a MNO key exchange **504** described above. In a Diffie-Hellman key exchange for a key derivation algorithm **503** in a eUICC key exchange algorithm **505**, the key exchange token **506** can comprise a value of either (i) integers p and g as described in a MNO key exchange **504**, or (ii) number g^a mod p. In an ECDH key exchange for key derivation algorithm **503** in a eUICC key exchange algorithm **505**, the key exchange token **506** can comprise a base point G. A key derivation algorithm **503** can output a second key K **204**. Other possibilities exist as well for the use of PKI keys and tokens in key exchange algorithms for those of ordinary skill in the art without departing from the scope of the present invention.

FIG. **5***c*

FIG. **5***c* is a simplified message flow diagram illustrating an exemplary system with exemplary data sent and received by a module with an eUICC, in accordance with exemplary embodiments. System **500** can include an eUICC subscription manager **109**, an IP network **111**, a mobile network operator **104**, a mobile device **101**. A module **101** can include a network application **101***x* and an eUICC **107**. The operation of a system **500** can be similar to a system **300** in FIG. **3**, except for the steps noted in this FIG. **5***c* where different steps can be taken than those within a FIG. **3**. As depicted for a system **500** in FIG. **5***c*, like numerals for steps and messages for a system **500** in FIG. **5***c* can comprise like steps and messages within a FIG. **3**. Different numerals discussed below can comprise different steps or messages for a system **500**. Many of the same steps common for a system **500** in FIG. **5***c* and a system **300** in FIG. **3** will be summarized in this FIG. **5***c*, while differences between the two systems (including the use of different numerals for different steps or messages) are described in more detail herein. As described in a step **302***a* and **302***b* in FIG. **3**, a mobile network operator **104** can send the eUICC subscription manager **109** information for a profile **107***d* in a step **302***a* or **302***b*, where the information can include the network parameters **201**, the first network module identity **202**, and the first key K **203**. The listed exemplary data for a profile **107***d* from the previous sentence are also discussed for a profile **107***d* in FIG. **2***a*.

For a step **507** in a system **500**, the MNO **104** can omit sending an encrypted second key K **204***a* in a ciphertext **208***b* within the data for the profile **107***d*. In other words, the profile **107***d* can omit the second key K **204** in either a plaintext or ciphertext form after a step **507** in a system **500**. The second key K **204** for a module **101** with eUICC **107** can be derived by a mobile network operator **104** in a MNO key

exchange algorithm **504** and an eUICC key exchange algorithm **505** below in FIG. **5***c*. Thus, in an embodiment illustrated in FIG. **5***c*, the second key K **204** for a second authentication **310** does not need to be transferred to the eUICC subscription manager **109** from MNO **104** for the eUICC subscription manager **109** to include in a profile **107***d*. Similarly, in a system **500**, the second key K **204** does not need to be transferred to the eUICC **107** in a profile **107***c*. In embodiments where (x) the MNO sends network access credentials such as the first and second network module identities **202** and **209***a* and a first key K **203** are sent in a step **302***b*, then (y) a step **507** to omit the sending of the second key K **204** could take place with a step **302***b* instead of the step **302***a* as depicted. The MNO **104** can send the first and second network module identities **202** and **209***a* and a first key K **203** in a step **302***a* or a step **302***b* to the eUICC subscription manager **109**. The MNO **104** can send to the eUICC subscription manager **109** the first and second network module identities **203** and **209***a* and a first key K **203** in a profile **107***d* in a step **302***a* or **302***b*, and the eUICC subscription manager **109** could receive the first and second network module identities **202** and **209***a* and a first key K **203** in a step **302***a* or a step **302***b*. Other possibilities for combinations of data sent from a MNO **104** to an eUICC subscription manager **109** in a step **302***a*, **302***b*, and **507** without departing from the scope of the present invention.

As depicted in FIG. **5***c*, an eUICC **107** in module **101** could perform steps **301**, then step **205** to receive a profile **107***c*, then receive an eUICC profile key **107***b*, and then convert the profile **107***c* into a profile **107***d* using the eUICC profile key **107***b* in a step **206**. The eUICC profile key **107***b* could also be (i) ciphered with a key ciphering algorithm **216**, sent from the eUICC subscription manager **109** as an encrypted eUICC profile key **218**, (ii) and then deciphered by a module **101** and/or eUICC **107** with a step **217**, as described in connection with FIG. **2***e* above. The module **101** and/or an eUICC **107** could (i) receive an encrypted eUICC profile key **107***b* in the form of an key **218** and (ii) use a key deciphering algorithm **217** to decrypt the encrypted eUICC profile key **107***b* in order (iii) to read a plaintext eUICC profile key **107***b* and then (iv) use the plaintext eUICC profile key **107***b* to decrypt the ciphertext **208***a*.

As depicted in FIG. **5***c*, after a module **101** sends a eUICC identity **107***a* and receives an eUICC profile **107***c* in a step **205**, the module **101** can conduct a step **206** in order to decrypt a ciphertext **208***a* that can include a first key K **203** using an eUICC profile key **107***b*. For the embodiments contemplated in FIG. **5***c*, where the second key K **204** can be derived or determined using a key exchange in steps **504** and **505** below, the second network module identity **209***a* can be included in the ciphertext **208***a* (as opposed to being included in the ciphertext **208***b* as depicted in FIG. **2***a*). One reason can be that a ciphertext **208***b* can be omitted from an eUICC profile **107***d* in embodiments where the second key K **204** can be mutually derived by the eUICC **107** and the MNO **104**, so there may be no need to include a separate ciphertext **208***b* within the eUICC profile **107***d*.

After reading a first network module identity **202** and the first key K **203**, the module **101** can conduct a first authentication **304**. Note that the first key K **203** can comprise key with a null value, as contemplated in wireless network **102** standards which support the use of emergency services where a module **101** may not include a valid first key K **203**. In this case where the first key K **203** comprises a null value, the use of a ciphertext **208***a* can also be optionally omitted, such that the receipt of an eUICC profile key **107***b* and the use of a ciphertext **208***a* could also be optionally omitted and a profile **107***c* could include plaintext for the first key K **203** and network module identity **202**. As depicted and described in connection with FIG. **3**, a module **101** and MNO **104** could conduct a first authentication step **304** in order to authenticate the module **101** using the first key K **203**. The first key K could comprise a non-null value in exemplary embodiments. A step **306** to calculate a first RES **119** value using the first key K **203** from a profile **107***d* could be included in a first authentication step **304**.

The mobile network operator **104** could compare the first received RES **119** with a recorded RES **119** in order to authenticate the module **101** with the eUICC **107** in a step **308***a*. A mobile network operator **104** can authenticate the module **101** using a step **308***a* in order to provide access to the IP network **111**, and the access to the IP network **111** can be limited (such as, but not limited to excluding access to the public Internet after a step **308***a*). The module **101** could use access to the limited or restricted IP network **111** in order for a user **113** of module **101** to conduct an authentication with the mobile network operator **104** using a second factor, as described in a step **308***b* in FIG. **3**.

After authenticating the module **101** with the first network module identity **202** and the first key K **203** in a step **308***a*, the mobile network operator **104** could authenticate a user **113** or verify a M2M service provider **115** is associated with the module **101** in a step **308***b*. The authentication of a user **113** or M2M service provider **115** in a step **308***b* could comprise authenticating module **101** and/or eUICC **107** with a second factor, where the second factor comprises or includes a secure association of a user **113** or M2M service provider **115** with the module **101**. As described in FIG. **3** above, a step **308***b* could result in the secure association of an identity for the user **113** or the M2M service provider **115** with an identity of the module **101**. After conduction a step **308***b* as depicted and described in connection with FIG. **3** above, the MNO **104** can record the second network module identity **209** in the eUICC profile **107***d* is associated with a particular user **113** or a particular M2M service provider **115**.

In a step **308***b*, the MNO **104** can also determine (i) the first network module identity **202** used in step **304** is associated with other identities such as module identity **110**, profile identity **107***e*, eUICC identity **107***a*, and the second network module identity **209**. By (i) authenticating a user **113** or (ii) verifying an identity for module **101** is associated with a M2M service provider **115** in a step **308***b*, MNO **104** can determine the second network module identity **209** (used in a subsequent authentication step **310**) belongs to or is associated with a particular user **113** or M2M service provider **115**. In other words, without a separate authentication step **308***b* in FIG. **5** and FIG. **3**, MNO **104** may not be able to securely determine that the second network module identity **209** from a profile **107***d* belongs to a particular user **113** or M2M service provider **115**. For embodiments where the module **101** is associated with a M2M service provider **115**, then a step **308***b* in FIG. **5***c* could comprise the MNO **104** verifying that an identity received in a first authentication **304** (such as, but not limited to, the first network module identity **202**) is associated with an M2M service provider **115**, such as checking the identity in a list of identities for modules **101** belonging to M2M service provider **115**.

After successfully authenticating or verifying an identity of a user **113** or an M2M service provider **115** is associated with module **101** in a step **308***b*, MNO **104** could process an MNO key exchange algorithm **504** in order to record a

second key K **204** for use in a subsequent second authentication **310** for module **101**. The second authentication **310** can use different network access credentials (i) associated with the module **101** and (ii) obtained by module **101** using an eUICC key exchange algorithm **505**. Although not illustrated in FIG. **5***c*, a MNO **104** could obtain the data for processing a MNO key exchange algorithm **504** in several different ways. A MNO **104** could receive the eUICC public key **214** for an MNO key exchange algorithm **504** from either (i) the module **101** or eUICC **107** directly after the first authentication **304** or (i) the eUICC subscription manager **109** in a step **302***b* above, where the eUICC subscription manager **109** could record the eUICC public key **214**. Other possibilities exist as well for a MNO **104** to receive an eUICC public key **214** associated with an identity for module **101** such as the eUICC identity **107***a*. The recording of an eUICC public key **214** with an MNO **104** is also depicted and described in connection with FIG. **5***a* above.

For a MNO key exchange algorithm **504** in FIG. **5***c*, the MNO **104** could also input a key exchange token **506** and a MNO private key **501**, in addition to the eUICC public key **214**, as illustrated in FIG. **5***b* above. After performing a MNO key exchange algorithm **504** in FIG. **5***c*, the MNO **104** can record the second key K **204** for the second module identity **209** (which is associated with the first module identity **202** in the profile **107***d*). As contemplated for a key exchange token **506** in FIG. **5***a* and FIG. **5***c*, the key exchange token **506** could be any of the cases (A) initially processed, derived, or determined by the MNO **104**, (B) shared between the MNO **104** and module **101** with the eUICC **107**, such as, but not limited to, recording the key exchange token **506** in the profile **107***d*, or (C) initially processed, derived, or determined by module **101**. FIG. **5***c* illustrates an embodiment for case (A) with key exchange token **506**, where the MNO **104** derives or determines the key exchange token **506** value and subsequent sends the key exchange token **506** value to the module **101** with the eUICC **107**. The MNO **104** can send the key exchange token **506** in a message **508**, and a network application **101***x* for the module **101** can receive the key exchange token **506** in the message **508** and forward the key exchange token **506** to the eUICC **107**. For case (A) the MNO **104** can omit sending the key exchange token **506** until after the user **113** or M2M service provider **115** for module **101** has been successfully authenticated or verified in a step **308***b*.

In a related embodiment to the embodiment depicted in FIG. **5***c*, for case (B) with key exchange token **506**, a separate message **508**, to communicate or transfer the key exchange token **506** between the MNO **104** and module **101** after a step **504**, can optionally be omitted, since both sides (MNO **104** and module **101**) could record the key exchange token **506** before a step **505** by a module **101** with an eUICC **107** below. For case (B), the MNO **104** could send a signal in a message **508** to the module **101** that the authentication step **308***b* of a user **113** or an M2M service provider **115** has been successfully completed, and thus module **101** could proceed with an eUICC key exchange algorithm **505** using the recorded key exchange token **506**.

For case (C) with key exchange token **506**, the eUICC **107** could derive or determine the key exchange token **506** and subsequently send the key exchange token **506** to the MNO in a message **508**. In this case (C), the MNO **104** could receive the key exchange token **506** (*i*) before processing the MNO key exchange algorithm **504**, and (ii) using the connection with the module **101** from the first authentication **304**. For case (C), the MNO **104** can require the successful completion of an authentication step **308***b* for a user **113** or M2M service provider **115** before accepting the key exchange token **506** from the module **101**.

In another exemplary embodiment, step **504** and step **505** can use different values for the key exchange token **506**, and both MNO **104** and module **101** can send the tokens **506** in a message **508** to the other node. In exemplary embodiments, a message **508** comprising the key exchange token **506** can be transferred through the IP network **111**, where access to the IP network **111** can be enabled by the first authentication **304** with the first key K **203**. Other possibilities exist as well for the transfer of a key exchange token **506** between a MNO **104** and a module **101** with an eUICC **107** for conducting a key exchange without departing from the scope of the present invention.

As depicted in FIG. **5***c*, a module **101** with an eUICC **107** can conduct an eUICC key exchange algorithm **505** in order to determine or read a second key K **204**. As depicted and described for an eUICC key exchange algorithm **505** in FIG. **5***b* above, the module **101** can input an MNO public key **502**, an eUICC private key **215**, and the key exchange token **506** into a key derivation algorithm **503** in order to output the second key K **204**. Note that the number, value, or sequence of bits for the second key K **204** determined by a MNO **104** in a step **504** can be equal to the number, value, or sequence of bits for the second key K **204** determined by a module **101** with an eUICC **107** in a step **505**. The mutual derivation of the second key K **204** by a MNO **104** in a step **504** and a module **101** in a step **505** can be different and superior to conventional technology for either (i) a physical UICC or (ii) an eUICC, since the second key K **204** does not need to be transferred in either physical or electronic form, where the electronic form could include encrypting the second key K **204** into a ciphertext. Supporting the derivation of a second key K **204** as depicted and described herein can be superior to the electronic or physical distribution of a key K, since a different second key K **204** can be utilized by repeating steps **504** and **505** a second time, such as with a different key exchange token **506**. In this manner, the second key K **204** associated with the second network module identity **209** could be rotated or changed periodically, thereby increasing the security of a system **500** compared to the use of a static, non-changing second key K **204** for the lifetime of a module **101** with a profile **107***d*.

After a step **505** in FIG. **5***c*, the subsequent steps and messages for communication between the module **101** and the MNO **104** can be the same or equivalent to those in FIG. **3** after a step **207**. In other words, the second key K **204** as used by a module **101** and/or eUICC **107** for embodiments in a FIG. **5***c* can be equivalent or similar to the processing and recording steps depicted and described in FIG. **3**, upon module **101** with an eUICC **107** reading the second key K **204** in a step **207** in FIG. **3**. In a system **500**, the module **101** or eUICC **107** could record the second key K **204** in a protected, nonvolatile memory as described in a step **207** of FIG. **3**. Other possibilities exist as well without departing from the scope of the present invention for the location or techniques of storing the second key K **204** resulting from a step **505**.

As depicted and described in connection with FIG. **6** below, the module **101** could record the second key K **204** in a volatile memory (and not storing the second key K **204** in nonvolatile memory), including potentially only within a register or cache memory of CPU **101***b*. In this manner, the security of the derived second key K **204** can be enhanced, since upon or after power off of a module **101**, a third party could not probe or read nonvolatile memory looking for the second key K **204**. Since a volatile memory could be flushed

upon loss of power or other circumstances, a MNO **104** and module **101** could repeat the steps **504** and **505**, respectively, including the transfer of a key exchange token **506**, a subsequent time when a module **101** needs to process or derive a new, subsequent second key K **504**. In other words, a module **101** can conduct a step **505** with a different key exchange token **506** at a later time after the first instance of a step **505** in order to derive a different, subsequent second key K **204**.

After deriving the second key K **204** in a step **505** in FIG. **5***c*, the module **101** with the eUICC **107** can authenticate with the MNO **104** using the wireless network **102**, the second network module identity **209**, the second key K **204**. The module **101** could conduct a second authentication **310** with the mobile network operator using the second key K **204**, as depicted in FIG. **5***c*, which is also equivalent to the second authentication **310** depicted in FIG. **3** above. Note that the module **101** could detach or disconnect from the wireless network **102** (*i*) after a sending/receiving a message **508** with key exchange token **506** and (ii) before sending the exemplary second attach message **303** with the second network module identity **209**.

The eUICC **107** within module **101** could use (i) the second key K **204** from a step **505**, and (ii) a second RAND **118** value from the MNO **104** to calculate a second RES **119** value in a step **311**. The eUICC **107** can send the second RES **119** to the network application **101***x*, and the module **101** can send the second RES **119** to the mobile network operator **104** through the wireless network **102**. The MNO **104** could compete the second authentication in a step **312** by verifying the second RES **119** is correct using (i) the second key K **204** derived by the MNO **104** in a step **504** above, and (ii) the second RAND **118** value sent to the module **101**. Upon successful authentication using the second key K **204**, as depicted and described in connection with FIG. **3**, the module **101** and MNO **104** could take subsequent steps after a step **312** for the module **101** to have access to the IP network **111** and also the public Internet.

In another embodiment contemplated in FIG. **5***c*, the mobile network operator **104** can send the second key K **204** to the module **101** using the wireless network **102** in a message **508**. In other words, the exemplary token **506** in FIG. **5***c* could comprise the second key K **204**, as opposed to an exemplary key exchange token **506**. In this embodiment, the use of a key derivation algorithm **503** in a step **504** could use input of a random number from random number generator **128** into the key derivation algorithm **503** (instead of PKI keys), and the output could be the second key K **204**. Or, the key derivation algorithm **503** in a step **504** could simply assign a random number to the second key K **204**. After a step **308***b* and step **504**, the mobile network operator **104** could send the second key K **204** in a message **508**. The second key K **204** in a message **508** could be encrypted using a key ciphering algorithm **216**. The message **508** with the second key K **204** as the token **506** could be received by the module **101** and decrypted using a key deciphering algorithm **217**. In another embodiment, the token **506** received by a module **101** could comprise (i) the second key K **204** as plaintext at the application layer, but (ii) ciphered at the data-link layer using the first RAND value from a step **304** and the first key K **203**. Other possibilities exist as well for a token **506** to comprise a second key K **204** without departing from the scope of the present invention.

The order of many of the steps and messages depicted within a system **500** could be changed without departing from the scope of the present invention. For example, a step **504** could also be conducted concurrently with a step **302***b* (instead of with a step **308***b*), such that a mobile network operator **104** could calculate a second key K **204** using a MNO key exchange algorithm **504** at the same time when MNO **104** sends the first network module identity **202** and first key K **203** to the eUICC subscription manager **109**. After receiving (i) an eUICC identity **107***a* from an eUICC subscription manager **109** and (ii) and an eUICC public key **214** in a step **302***b*, the mobile network operator **104** can process a MNO key exchange algorithm **504** in order to calculate or process a second key K **204**.

In an exemplary embodiment, a mobile network operator **104** could receive a list of eUICC public keys **214** and eUICC identities **107***a* from an M2M service provider **115** before eUICC subscription manager **109** receives the eUICC identity **107***a* in a step **205**. The MNO **104** could use the data received from a M2M service provider **115** (including a list of eUICC identities **107***a* and eUICC public keys **214**) in order to derive the second key K **204** using a MNO key derivation algorithm **504** and the key exchange token **506**. The MNO **104** could send the key exchange token **506** to an eUICC subscription manger **109** before the eUICC subscription manager **109** participates in a step **205** as illustrated in FIG. **5***c*, and the eUICC subscription manager **109** could include the key exchange token **506** with the eUICC profile **107***c*, such that module **101** could receive the key exchange token **506** in the eUICC profile **107***c*.

In this embodiment (which can also comprise a case (B) for the transfer of key exchange token **506** for a message **508** as described above), a module **101** using an eUICC **107** with profile **107***d* and key exchange token **506** could potentially derive the second key K **204** before a step **308***b*, but in preferred embodiments the mobile network operator **104** does not allow the use of the second key K **204** until after an authentication step **308***b* of a user **113** or M2M service provider **115**. In another embodiment, the values for the first network module identity **202** and the second network module identity **209** could be the same or equal, such that the module **101** uses the same network module identity for both first authentication **304** and a second authentication **310**. In this case, the MNO **104** can support a change in key K used with the first network module identity **202** from the first key K **203** to the second key K **204**. The first key K **203** can be included in a profile **107***d*, but the second key K **204** can be derived by an MNO **104** using a step **504** and a module **101** using a step **505**. Other possibilities exist as well for a MNO **104** and a module **101** to mutually derive a second key K **204** for use with an eUICC **107** without departing from the scope of the present invention.

FIG. **6**

FIG. **6** is a flow chart illustrating exemplary steps for a module to use an eUICC and authenticate with a wireless network, in accordance with exemplary embodiments. An exemplary system **500** depicted and described in connection with FIG. **5***c* can also support the repeated derivation of a second key K **204** for a MNO **104** and module **101** with an eUICC **107**. The use and support for different second keys K **204** over time can increase security, since the second key K **204** can be securely and periodically rotated, thereby enhancing the security and efficiency of a system **500**, compared to either (i) physically changing a UICC each time a new key K is desired, or (ii) querying, downloading, and selecting a new profile **107***c* or profile **107***d* each time the use of a different key K is desired (including steps to communicate and record a second key K **204** in the profile **107***d*). In other words, the use of multiple second keys K **204** over time can be accomplished for the same profile **107***d*.

A step **403** in FIG. **6** can comprise a module **101** with an eUICC **107** conducting the substeps for a step **403** as depicted and described in connection with FIG. **4**. In a step **403**, a module **101** could connect with a first wireless network **102**, receive an eUICC profile **107***c*, decrypt the profile **107***c* using an eUICC profile key **107***b*, activate the profile **107***d*, and authenticate with a second wireless network **102** using a first key K **203** from the profile **107***d*. As noted above, other possibilities exist as well for a module **101** to record an eUICC profile **107***d*, such as the loading of a profile **107***d* by a manufacturer, without departing from the scope of the present invention.

After successful authentication of the module **101** at the conclusion of a substep **304** in a step **403**, a user **113** associated with the module **101** could conduct an authentication step **308***b* with the mobile network operator **104**. A step **308***b* can be useful for a mobile network operator **104** to authenticate or securely associate (i) a module **101** with (ii) a legal entity contractually responsible for the services used by a module **101**. The use of a step **308***b* is also described in FIG. **3**. Note that module **101** could be associated with an M2M service provider **115** instead of a mobile phone subscriber such as an individual, and in this case the M2M service provider **115** could take steps before a step **308***b* in order to inform or confirm with MNO **104** that module **101** with an identity such as module identity **110** or the first network module identity **202** belongs to or is associated with the M2M service provider **115**.

In other words, a MNO **104** may not have control over the distribution or recipient of a profile **107***c* from an eUICC subscription manager **109** in a step **403**, and a user authentication in a step **308***b* allows a MNO **104** to confirm, verify, or establish a contractual relationship with a user **113**. Business contracts and procedures for an MNO **104** to provide service to a module **101** with an eUICC **107** with profile **107***d* could require that a user **113** successfully completes an authentication step **308***b* (with example steps described in FIG. **3** above), before the MNO **104** provides service such as voice calls or access to the public Internet. The second factor in a step **308***b* can be data communicated between the MNO **104** and the user **113** to confirm an identity of the user **113**. Examples of data for the second factor in a step **308***b* are described in connection with a step **308***b* in FIG. **3**. The first factor contemplated in a system **300** or system **500** can be the successful receipt of a RES **119** value in a first authentication **304**. Upon conclusion of the step **308***b* the MNO **104** could securely determine and record that a module **101** with the first network module identity **202** and/or the second network module identity **209** from the profile **107***d* is associated with an authenticated user **113**.

The module **101** could then perform a step **508** in order access a key exchange token **506**. As described for a key exchange token **506** in FIG. **5***c*, the module **101** could receive the token **506** in a step **508** (case A), or the module **101** could send the token **506** in a step **508** (case B). Step **508** can comprise sending or receiving the message **508** from FIG. **5***c*. The key exchange token **506** could comprise a key exchange token **506** as depicted and described in connection with FIG. **5***b*. Or, as described for a message **508** in FIG. **5***c*, the key exchange token **506** could comprise the second key K **204**, such as the second key K **204** encrypted by MNO **104** with a key ciphering algorithm **216** and decrypted by the module **101** with the eUICC **107** using a key deciphering algorithm **217**. The key exchange token **506** at a step **508** could comprise parameters for a key derivation algorithm **503**, such as a base point G if elliptic curve cryptography PKI keys are used with MNO public key **502**, MNO private key **501**, eUICC public key **214**, and eUICC private key **215**.

In another exemplary embodiment, key exchange token **506** with a Diffie Hellman key exchange for a key derivation algorithm **503** could comprise a multiplicative group of integers modulo p, where p is prime and g is primitive root mod p. Other possibilities for a key exchange token **506** in a message **508** exist as well without departing from the scope of the present invention, including the use of multiple values and numbers for a key exchange token **506**. The key exchange token **506** transfer between MNO **104** and module **101** in a step **508** can use the second wireless network after the module **101** authenticates with the first key K **203**, and thus the data-link layer for transfer of the key exchange token **506** could be ciphered using the first key K **203** (where a cipher key for the data-link layer is derived from the first key K **203** and a RAND **118** from a first authentication **304**).

A module **101** with an eUICC **107** could then perform a step **505**, which could comprise an eUICC key exchange algorithm **505** as depicted in FIG. **5***c* using (i) the token **506** from a message **508** above, and (ii) the eUICC private key **215** and MNO public key **502**. The output from an eUICC key exchange algorithm **505** can comprise the second key K **204**. In an exemplary embodiment, the second key K **204** output from the eUICC key exchange algorithm **505** is recorded within a memory of module **101** on a temporary basis. After obtaining and reading the second key K **204** from a step **505**, the module **101** can conduct a second authentication **310** with the MNO **104** using the second key K **204**. The second key K **204** can be associated with a second network module identity **209**, which could be recorded in the profile **107***c* and profile **107***d* for the eUICC **107** from a step **403** above. Exemplary details and steps for a second authentication **310** using the second key K **204** are depicted and described in connection with FIG. **3** and FIG. **5***c* above.

After the conclusion of the second authentication **310**, the module **101** could have access to the public Internet through the IP network **111** of the wireless network **102**. After a step **310** and before a subsequent step **601** below, the module **101** could continue using the second key K **204** with the second network identity **209** in many additional repeated steps **310**, such that module **101** could use the second key K **204** for an exemplary period of time such as several days or several months, and other possibilities exist as well for the continued use of a second key K **204** after a step **310** and before a step **601** in FIG. **6**. For example, a module **101** could repeat a step **311** in a second authentication **310** multiple times with the same wireless network **102** using the same number of value for the second key K **204** during a period of time before a step **601**.

At a step **601** in FIG. **6**, a module **101** or a MNO **104** could determine if the use of a new second key K **204** is required or preferred. There could be several reasons that a different second key K **204** may be periodically preferred. Exemplary reasons include (i) the second key K **204** may only be temporarily stored within a volatile memory in CPU **101***b*, such that a power cycle of module **101** or CPU **101***b* could flush the volatile memory, and in this case module **101** and MNO **104** may need to derive a new second key K **204**, (ii) ownership of module **101** may change, and business or legal contracts could stipulate that a previous second key K **204** with the prior owner of module **101** may no longer be valid and thus a new second key K **204** may be required, (iii) a MNO **104** and a module **101** or M2M service provider **102** may prefer to periodically rotate the second key K **204** in

order to increase security of a system **500**. For example, a module **101** may have a planned lifetime of more than a decade, and given the speed of change for mobile networking technology, a module **101** may prefer to support the change in a second key K **204** for accessing a wireless network **102** without downloading and installing a new, different profile **107***d*. Other possibilities exists as well for exemplary reasons why a module **101** and/or a MNO **104** could determine that the use of a new, second key K **204** is preferred or required in a step **601** without departing from the scope of the present invention. If a module **101** or MNO **104** determine a value of "no" for a step **601**, then the module **101** could continue periodically performing repeated second authentication **310** steps using the same second key K **204**, as illustrated in FIG. **6**.

As depicted in FIG. **6**, upon determination of a value of "yes" for a step **601**, a module **101** could return to a step **508** and receive another key exchange token **506**. As depicted in FIG. **6**, the module **101** could use a first authentication **304**, which could comprise an authentication with the first key K **203**. A return to the first authentication **304** with the first key K **203** could be omitted in some embodiments, and thus the box for **304** depicted in FIG. **6** is a dashed line.

In this embodiment where module **101** or MNO **104** determine or evaluates that a new second key K **204** is preferred at a step **601**, the module **101** could return to a step **508** by attaching with the wireless network **102** again using the first network module identity **202** and the first key K **203**. For example, if the second key K **204** is not available (such as being flushed from being stored only in a volatile memory, a potential error condition such as a reset of module **101**, or the second key K **204** is no longer preferred to be used), then the module **101** with the eUICC **107** could use data recorded in the profile **107***d* to reconnect with the wireless network **102**. For example, the first key K **203** and the first network identity **202** may be recorded in generally accessible nonvolatile memory, such as, but not limited to, a flash memory **101***w* within module **101** and subsequently the first key K **203** and the first network identity **202** could be used in a step **304** before a return to a step **508**. Or, the module **101** and MNO **104** could continue to use the previous second key K **204** (if available) for a communications link to transfer the key exchange token **506**, and thus the use of a step **304** with the first key K **203** is optional.

Upon return to a step **508** module **101** and MNO **104** could transfer a key exchange token **506** as described in a step **508** in FIG. **6** above. Upon return to a step **508**, the module **101** and MNO **104** could transfer a key exchange token **506** that has a different value or number from a key exchange token **506** transferred earlier (in order to support the derivation of a different second key K **204** than from a previous iteration). Using the new, different value for the key exchange token **506**, the module **101** with the eUICC **107** could derive a new, different second key K **203**. In this manner and by using the steps illustrated in FIG. **6**, a second key K **204** could operate as a key K for "temporary use", and a different second key K **204** for use in a subsequent authentication **310** could be obtained by a repeated use of a step **505** with a new, different key exchange token **506** for module **101** connecting with the same wireless network **102**.

The module **101** and MNO **104** could continue to use the same network module identity (such as a second network module identity **209**) upon a return to steps **508** through **310**, or the MNO **104** could also send the module **101** a new, different network module identity in a message **508** upon a return to steps **508** through **310**. A MNO **104** and a module **101** can repeat the use the steps **508** through **601** depicted and described in this FIG. **6** in order to derive a series over time of second keys K **204** for the module **101** with the eUICC **107**. Each member of the series (comprising a different second key K **204**) could be associated with the second network module identity **209**, and the second network module identity **209** could remain constant or can also change to different numbers or values for use in a step **310**. Supporting a change in the second key K **204** can both increase the flexibility and security of a system **500** and related systems for a user and a mobile network operator **104**.

CONCLUSION

Various exemplary embodiments have been described above. Those skilled in the art will understand, however, that changes and modifications may be made to those examples without departing from the scope of the claims.

What is claimed is:

1. A mobile device for communicating with a wireless network, the mobile device comprising:

a first memory configured to store an embedded universal integrated circuit card (eUICC) identity;

a random number generator operably connected to a processor connected to a second memory configured to generate a random number for an eUICC private key corresponding to an eUICC public key;

a radio including one or more transmit antennas and one or more receiving antennas configured to:

a. transmit, to a subscription manager, the eUICC identity and the eUICC public key; and

b. receive, from the subscription manager, i) an eUICC profile comprising network parameters, a key K, and a subscriber identity and ii) a symmetric key; and

an eUICC associated with the eUICC identity and configured to:

a. derive a profile key using an elliptic curve Diffie Hellman (ECDH) key exchange with the eUICC private key and a subscription manager public key;

b. decrypt a first portion of the eUICC profile using the profile key;

c. receive the symmetric key from a network application operating in the mobile device;

d. decrypt a second portion of the eUICC profile using the symmetric key, the second portion comprising the key K and the subscriber identity, wherein the first portion and the second portion are distinct; and

e. generate a response value for authentication of the mobile device with the wireless network using the key K.

2. The mobile device of claim **1**, wherein the eUICC is further configured to receive a profile identity for the eUICC profile as a plaintext.

3. The mobile device of claim **1**, wherein the eUICC operates within a universal integrated circuit card within the mobile device.

4. The mobile device of claim **1**, wherein the random number generator is configured to generate the random number in response to input from at least one of a clock and a sensor.

5. The mobile device of claim **1**, wherein the random number generator is configured to generate the random number from a seed value, wherein the seed value comprises data from at least one of a sensor, the radio, a bus, a clock, a physical interface, the memory, and an operating system.

6. The mobile device of claim **1**, wherein the network application is configured to communicate with i) the wireless network and ii) the eUICC in the mobile device using a system bus.

7. The mobile device of claim **1**, wherein the eUICC comprises computer executable instructions for a processor in the mobile device, and wherein the computer executable instructions are stored within the memory.

8. The mobile device of claim **1**, wherein the eUICC comprises a package soldered onto a circuit board of the mobile device.

9. The mobile device of claim **1**, further comprising a user interface configured to receive user identification information before the mobile device receives the symmetric key.

10. The mobile device of claim **1**, wherein the first portion of the eUICC profile includes the network parameters, the network parameters comprising a list of numbers associated with a mobile network operator.

11. The mobile device of claim **1**, wherein the network parameters comprise a mobile country code (MCC) and a mobile network code (MNC) associated with the wireless network.

12. The mobile device of claim **1**, wherein the radio is further configured to receive, from the subscription manager, the eUICC profile using transport layer security.

13. The mobile device of claim **1**, wherein the subscriber identity comprises an International Mobile Subscriber Identity (IMSI).

14. The mobile device of claim **1**, wherein the radio is further configured to receive, from the subscription manager, a ciphertext for the symmetric key, wherein the mobile device is configured to decrypt the ciphertext using at least the eUICC private key.

15. The mobile device of claim **1**, wherein the mobile device further comprises at least one of a wireless handset, a cellular phone, a smartphone, a tablet computer, a laptop, a tracking device, and a circuit board with the radio.

16. The mobile device of claim **1**, wherein the second memory is the same memory as the first memory.

17. The mobile device of claim **1**, wherein the one or more receiving antennas are the one or more transmit antennas.

* * * * *