ETSI TS 133 102 V10.0.0 (2011-05)

Technical Specification

Universal Mobile Telecommunications System (UMTS);
LTE;
3G security;
Security architecture
(3GPP TS 33.102 version 10.0.0 Release 10)

Reference
RTS/TSGS-0333102va00

Keywords
LTE, SECURITY, UMTS

ETSI

650 Route des Lucioles
F-06921 Sophia Antipolis Cedex - FRANCE

Tel.: +33 4 92 94 42 00 Fax: +33 4 93 65 47 16

Siret N° 348 623 562 00017 - NAF 742 C
Association à but non lucratif enregistrée à la
Sous-Préfecture de Grasse (06) N° 7803/88

Important notice

Individual copies of the present document can be downloaded from:
http://www.etsi.org

The present document may be made available in more than one electronic version or in print. In any case of existing or perceived difference in contents between such versions, the reference version is the Portable Document Format (PDF). In case of dispute, the reference shall be the printing on ETSI printers of the PDF version kept on a specific network drive within ETSI Secretariat.

Users of the present document should be aware that the document may be subject to revision or change of status. Information on the current status of this and other ETSI documents is available at
http://portal.etsi.org/tb/status/status.asp

If you find errors in the present document, please send your comment to one of the following services:
http://portal.etsi.org/chaircor/ETSI_support.asp

Copyright Notification

No part may be reproduced except as authorized by written permission.
The copyright and the foregoing restriction extend to reproduction in all media.

© European Telecommunications Standards Institute 2011.
All rights reserved.

DECT™, **PLUGTESTS**™, **UMTS**™, **TIPHON**™, the TIPHON logo and the ETSI logo are Trade Marks of ETSI registered for the benefit of its Members.
3GPP™ is a Trade Mark of ETSI registered for the benefit of its Members and of the 3GPP Organizational Partners.
LTE™ is a Trade Mark of ETSI currently being registered
for the benefit of its Members and of the 3GPP Organizational Partners.
GSM® and the GSM logo are Trade Marks registered and owned by the GSM Association.

Intellectual Property Rights

IPRs essential or potentially essential to the present document may have been declared to ETSI. The information pertaining to these essential IPRs, if any, is publicly available for **ETSI members and non-members**, and can be found in ETSI SR 000 314: *"Intellectual Property Rights (IPRs); Essential, or potentially Essential, IPRs notified to ETSI in respect of ETSI standards"*, which is available from the ETSI Secretariat. Latest updates are available on the ETSI Web server (http://webapp.etsi.org/IPR/home.asp).

Pursuant to the ETSI IPR Policy, no investigation, including IPR searches, has been carried out by ETSI. No guarantee can be given as to the existence of other IPRs not referenced in ETSI SR 000 314 (or the updates on the ETSI Web server) which are, or may be, or may become, essential to the present document.

Foreword

This Technical Specification (TS) has been produced by ETSI 3rd Generation Partnership Project (3GPP).

The present document may refer to technical specifications or reports using their 3GPP identities, UMTS identities or GSM identities. These should be interpreted as being references to the corresponding ETSI deliverables.

The cross reference between GSM, UMTS, 3GPP and ETSI identities can be found under http://webapp.etsi.org/key/queryform.asp.

NWO EX2027
Samsung v Network-1, IPR2026-00114
Page 3 of 73

Contents

Intellectual Property Rights 2
Foreword 2
Foreword 6
1 Scope 7
2 References 7
3 Definitions, symbols abbreviations and conventions 9
3.1 Definitions 9
3.2 Symbols 10
3.3 Abbreviations 10
3.4 Conventions 11
4 Overview of the security architecture 12
5 Security features 13
5.1 Network access security 13
5.1.1 User identity confidentiality 13
5.1.2 Entity authentication 14
5.1.3 Confidentiality 14
5.1.4 Data integrity 14
5.1.5 Mobile equipment identification 15
5.2 Network domain security 15
5.2.1 Void 15
5.2.2 Void 15
5.2.3 Void 15
5.2.4 Fraud information gathering system 15
5.3 User domain security 15
5.3.1 User-to-USIM authentication 15
5.3.2 USIM-Terminal Link 15
5.4 Application security 16
5.4.1 Secure messaging between the USIM and the network 16
5.4.2 Void 16
5.4.3 Void 16
5.4.4 Void 16
5.5 Security visibility and configurability 16
5.5.1 Visibility 16
5.5.2 Configurability 16
6 Network access security mechanisms 17
6.1 Identification by temporary identities 17
6.1.1 General 17
6.1.2 TMSI reallocation procedure 17
6.1.3 Unacknowledged allocation of a temporary identity 17
6.1.4 Location update 18
6.2 Identification by a permanent identity 18
6.3 Authentication and key agreement 18
6.3.1 General 18
6.3.2 Distribution of authentication data from HE to SN 20
6.3.3 Authentication and key agreement 22
6.3.4 Distribution of IMSI and temporary authentication data within one serving network domain 25
6.3.5 Re-synchronisation procedure 26
6.3.6 Reporting authentication failures from the SGSN/VLR to the HLR 27
6.3.6.1 Authentication re-attempt 27
6.3.7 Length of authentication parameters 28
6.4 Local authentication and connection establishment 28
6.4.1 Cipher key and integrity key setting 28

NWO EX2027
Samsung v Network-1, IPR2026-00114
Page 4 of 73

6.4.2 Ciphering and integrity mode negotiation 28
6.4.3 Cipher key and integrity key lifetime 29
6.4.4 Cipher key and integrity key identification 29
6.4.5 Security mode set-up procedure 30
6.4.6 Signalling procedures in the case of an unsuccessful integrity check 33
6.4.7 Signalling procedure for periodic local authentication 33
6.4.8 Initialisation of synchronisation for ciphering and integrity protection 33
6.4.9 Emergency call handling 34
6.4.9.1 Security procedures applied 34
6.4.9.2 Security procedures not applied 34
6.5 Access link data integrity 35
6.5.1 General 35
6.5.2 Layer of integrity protection 35
6.5.3 Data integrity protection method 35
6.5.4 Input parameters to the integrity algorithm 36
6.5.4.1 COUNT-I 36
6.5.4.2 IK 36
6.5.4.3 FRESH 37
6.5.4.4 DIRECTION 37
6.5.4.5 MESSAGE 37
6.5.5 Integrity key selection 37
6.5.6 UIA identification 37
6.6 Access link data confidentiality 38
6.6.1 General 38
6.6.2 Layer of ciphering 38
6.6.3 Ciphering method 38
6.6.4 Input parameters to the cipher algorithm 39
6.6.4.1 COUNT-C 39
6.6.4.2 CK 40
6.6.4.3 BEARER 41
6.6.4.4 DIRECTION 41
6.6.4.5 LENGTH 41
6.6.5 Cipher key selection 41
6.6.6 UEA identification 41
6.7 Void 42
6.8 Interoperation and handover between UMTS and GSM 42
6.8.1 Authentication and key agreement of UMTS subscribers 42
6.8.1.1 General 42
6.8.1.2 R99+ HLR/AuC 43
6.8.1.3 R99+ VLR/SGSN 44
6.8.1.4 R99+ ME 45
6.8.1.5 USIM 45
6.8.2 Authentication and key agreement for GSM subscribers 46
6.8.2.1 General 46
6.8.2.2 R99+ HLR/AuC 47
6.8.2.3 VLR/SGSN 47
6.8.2.4 R99+ ME 47
6.8.3 Distribution and use of authentication data between VLRs/SGSNs 47
6.8.4 Intersystem handover for CS Services – from UTRAN to GSM BSS 48
6.8.4.1 UMTS security context 49
6.8.4.2 GSM security context 49
6.8.5 Intersystem handover for CS Services – from GSM BSS to UTRAN 50
6.8.5.1 UMTS security context 50
6.8.5.2 GSM security context 50
6.8.6 Intersystem change for PS Services – from UTRAN to GSM BSS 51
6.8.6.1 UMTS security context 51
6.8.6.2 GSM security context 51
6.8.7 Intersystem change for PS services – from GSM BSS to UTRAN 51
6.8.7.1 UMTS security context 51
6.8.7.2 GSM security context 52
6.8.8 PS handover from Iu to Gb mode 52
6.8.8.1 UMTS security context 52

NWO EX2027
Samsung v Network-1, IPR2026-00114
Page 5 of 73

6.8.8.2 GSM security context 53
6.8.9 PS handover from Gb to Iu mode 53
6.8.9.1 UMTS security context 53
6.8.9.2 GSM security context 53
6.8.10 SRVCC – from HSPA to UTRAN/GERAN 54

7 Void 56

8 Application security mechanisms 56
8.1 Void 56
8.2 Void 56
8.3 Mobile IP security 56

Annex A (informative): Requirements analysis 57

Annex B (normative): Key derivation function 58

B.1 General 58

B.2 FC value allocations 58

B.3 Derivation of $CK''_{CS}||IK''_{CS}$ from $CK_{PS}||IK_{PS}$ 58

B.4 Derivation of Kc" from Kc 58

B.5 Derivation of Kc_{128} 58

Annex C (informative): Management of sequence numbers 59

C.1 Generation of sequence numbers in the Authentication Centre 59
C.1.1 Sequence number generation schemes 59
C.1.1.1 General scheme 59
C.1.1.2 Generation of sequence numbers which are not time-based 60
C.1.1.3 Time-based sequence number generation 60
C.1.2 Support for the array mechanism 60

C.2 Handling of sequence numbers in the USIM 60
C.2.1 Protection against wrap around of counter in the USIM 61
C.2.2 Verification of sequence number freshness in the USIM 61
C.2.3 Notes 61

C.3 Sequence number management profiles 62
C.3.1 Profile 1: management of sequence numbers which are partly time-based 62
C.3.2 Profile 2: management of sequence numbers which are not time-based 63
C.3.3 Profile 3: management of sequence numbers which are entirely time-based 63
C.3.4 Guidelines for the allocation of the index values in the array scheme 64

C.4 Guidelines for interoperability in a multi-vendor environment 64

Annex D: Void 65

Annex E: Void 66

Annex F (informative): Example uses of the proprietary part of the AMF 67

F.1 Support multiple authentication algorithms and keys 67

F.2 Changing sequence number verification parameters 67

F.3 Setting threshold values to restrict the lifetime of cipher and integrity keys 67

Annex G (normative): Support of algorithm change features 68

Annex H (normative): Usage of the AMF 69

Annex I (informative): Change history 70

History 72

NWO EX2027
Samsung v Network-1, IPR2026-00114
Page 6 of 73

Foreword

This Technical Specification (TS) has been produced by the 3rd Generation Partnership Project (3GPP).

The contents of the present document are subject to continuing work within the TSG and may change following formal TSG approval. Should the TSG modify the contents of the present document, it will be re-released by the TSG with an identifying change of release date and an increase in version number as follows:

Version x.y.z

where:

x the first digit:

1 presented to TSG for information;

2 presented to TSG for approval;

3 or greater indicates TSG approved document under change control.

y the second digit is incremented for all changes of substance, i.e. technical enhancements, corrections, updates, etc.

z the third digit is incremented when editorial only changes have been incorporated in the document.

NWO EX2027
Samsung v Network-1, IPR2026-00114
Page 7 of 73

1 Scope

This specification defines the security architecture, i.e., the security features and the security mechanisms, for the third generation mobile telecommunication system.

A security feature is a service capability that meets one or several security requirements. The complete set of security features address the security requirements as they are defined in "3G Security: Threats and Requirements" (TS 21.133 [1]) and implement the security objectives and principles described in TS 33.120 [2]. A security mechanism is an element that is used to realise a security feature. All security features and security mechanisms taken together form the security architecture.

An example of a security feature is user data confidentiality. A security mechanism that may be used to implement that feature is a stream cipher using a derived cipher key.

This specification defines 3G security procedures performed within 3G capable networks (R99+), i.e. intra-UMTS and UMTS-GSM. As an example, UMTS authentication is applicable to UMTS radio access as well as GSM radio access provided that the serving network node and the MS are UMTS capable. Interoperability with non-UMTS capable networks (R98-) is also covered.

GSM security functions are defined in the TS 43.020 [36].

2 References

The following documents contain provisions which, through reference in this text, constitute provisions of the present document.

- References are either specific (identified by date of publication, edition number, version number, etc.) or non-specific.
- For a specific reference, subsequent revisions do not apply.
- For a non-specific reference, the latest version applies. In the case of a reference to a 3GPP document (including a GSM document), a non-specific reference implicitly refers to the latest version of that document in the same Release as the present document.

[1] 3GPP TS 21.133: "3rd Generation Partnership Project (3GPP); Technical Specification Group (TSG) SA; 3G Security; Security Threats and Requirements".

[2] 3GPP TS 33.120: "3rd Generation Partnership Project (3GPP); Technical Specification Group (TSG) SA; 3G Security; Security Principles and Objectives".

[3] 3GPP TR 21.905: "3rd Generation Partnership Project (3GPP); Technical Specification Group Services and System Aspects; Vocabulary for 3GPP Specifications (Release 1999)".

[4] 3GPP TS 23.121: "3rd Generation Partnership Project (3GPP); Technical Specification Group Services and System Aspects; Architecture Requirements for Release 99".

[5] 3GPP TS 31.101: "3rd Generation Partnership Project (3GPP); Technical Specification Group Terminals; UICC-terminal interface; Physical and logical characteristics".

[6] 3GPP TS 22.022: "3rd Generation Partnership Project (3GPP); Technical Specification Group Services and System Aspects; Personalisation of UMTS Mobile Equipment (ME); Mobile functionality specification".

[7] 3GPP TS 23.048: "3rd Generation Partnership Project (3GPP); Technical Specification Group Terminals; Security Mechanisms for the (U)SIM application toolkit; Stage 2".

[8] ETSI GSM 03.20: "Digital cellular telecommunications system (Phase 2+); Security related network functions".

NWO EX2027
Samsung v Network-1, IPR2026-00114
Page 8 of 73

[9] 3GPP TS 23.060: "3rd Generation Partnership Project; Technical Specification Group Services and System Aspects; Digital cellular telecommunications system (Phase 2+); General Packet Radio Service (GPRS); Service description; Stage 2".

[10] ISO/IEC 9798-4: "Information technology - Security techniques - Entity authentication - Part 4: Mechanisms using a cryptographic check function".

[11] 3GPP TS 35.201: "3rd Generation Partnership Project; Technical Specification Group Services and System Aspects; Specification of the 3GPP confidentiality and integrity algorithms; Document 1: f8 and f9 specifications".

[12] 3GPP TS 35.202: "3rd Generation Partnership Project; Technical Specification Group Services and System Aspects; Specification of the 3GPP confidentiality and integrity algorithms; Document 2: Kasumi algorithm specification".

[13] 3GPP TS 35.203: "3rd Generation Partnership Project; Technical Specification Group Services and System Aspects; Specification of the 3GPP confidentiality and integrity algorithms; Document 3: Implementers' test data".

[14] 3GPP TS 35.204: "3rd Generation Partnership Project; Technical Specification Group Services and System Aspects; Specification of the 3GPP confidentiality and integrity algorithms; Document 4: Design conformance test data".

[15] 3GPP TS 31.111: "3rd Generation Partnership Project; Technical Specification Group Terminals; USIM Application Toolkit (USAT)".

[16] 3GPP TS 22.048: "3rd Generation Partnership Project (3GPP); Technical Specification Group Terminals; Security Mechanisms for the (U)SIM Application Toolkit; Stage 1".

[17] 3GPP TS 25.331: "3rd Generation Partnership Project; Technical Specification Group Radio Access Network; RRC Protocol Specification".

[18] 3GPP TS 25.321: "3rd Generation Partnership Project; Technical Specification Group Radio Access Network; MAC protocol specification".

[19] 3GPP TS 25.322: "3rd Generation Partnership Project; Technical Specification Group Radio Access Network; RLC Protocol Specification".

[20] 3GPP TS 31.102: "3rd Generation Partnership Project (3GPP); Technical Specification Group Terminals; Characteristics of the USIM Application".

[21] 3GPP TS 22.101: "3rd Generation Partnership Project; Technical Specification Group Services and System Aspects; Service aspects; Service principles".

[22] 3GPP TS 23.195: "3rd Generation Partnership Project; Technical Specification Group Services and System Aspects; Provision of User Equipment Specific Behaviour Information (UESBI) to network entities".

[23] 3GPP TS 43.129: "3rd Generation Partnership Project; Technical Specification Group GERAN; Packet-switched handover for GERAN A/Gb mode; Stage 2'.

[24] 3GPP TS 35.215: "Specification of the 3GPP Confidentiality and Integrity Algorithms UEA2 & UIA2; Document 1: UEA2 and UIA2 specifications".

[25] 3GPP TS 35.216: "Specification of the 3GPP Confidentiality and Integrity Algorithms UEA2 & UIA2; Document 2: SNOW 3G specification".

[26] 3GPP TS 35.217: "Specification of the 3GPP Confidentiality and Integrity Algorithms UEA2 & UIA2; Document 3: Implementors" test data".

[27] 3GPP TS 35.218: "Specification of the 3GPP Confidentiality and Integrity Algorithms UEA2 & UIA2; Document 4: Design conformance test data".

[28] 3GPP TS 33.401: "3GPP System Architecture Evolution: Security architecture".

[29] 3GPP TS 33.402: "3GPP System Architecture Evolution: Security aspects of non 3GPP accesses".

NWO EX2027
Samsung v Network-1, IPR2026-00114
Page 9 of 73

[30] 3GPP TS 33.220: "Generic Authentication Architecture (GAA); Generic bootstrapping architecture".

[31] 3GPP TS 25.413: "UTRAN Iu interface RANAP signalling".

[32] 3GPP TS 22.003: "Circuit Teleservices supported by a Public Land Mobile Network (PLMN)".

[33] 3GPP TS 22.101: "Service aspects; Service principles".

[34] 3GPP TS 23.167: " IP Multimedia Subsystem (IMS) emergency sessions".

[35] 3GPP TS 24.008: " Mobile radio interface Layer 3 specification; Core network protocols; Stage 3".

[36] 3GPP TS 43.020: "3rd Generation Partnership Project (3GPP); Technical Specification Group (TSG) SA; Technical Specification Group Services and system Aspects; Security related network functions".

3 Definitions, symbols abbreviations and conventions

3.1 Definitions

In addition to the definitions included in TR 21.905 [3] and TS 22.101 [21], for the purposes of the present document, the following definitions apply:

NOTE: 'User' and 'Subscriber' have been defined in TR 21.905 [3]. 'User Equipment', 'USIM', 'SIM' and 'IC Card' have been defined in TS 22.101 [21].

Confidentiality: The property that information is not made available or disclosed to unauthorised individuals, entities or processes.

Data integrity: The property that data has not been altered in an unauthorised manner.

Data origin authentication: The corroboration that the source of data received is as claimed.

Entity authentication: The provision of assurance of the claimed identity of an entity.

Key freshness: A key is fresh if it can be guaranteed to be new, as opposed to an old key being reused through actions of either an adversary or authorised party.

UMTS Entity authentication and key agreement: Entity authentication according to this specification.

GSM Entity authentication and key agreement: The entity Authentication and Key Agreement procedure to provide authentication of a SIM to a serving network domain and to generate the key Kc in accordance to the mechanisms specified in GSM 03.20.

User: Within the context of this specification a user is either a UMTS subscriber (Section 6.8.1) or a GSM Subscriber (Section 6.8.2) or a physical person as defined in TR 21.905[3] (Section 5.3 and 5.5).

UMTS subscriber: a Mobile Equipment with a UICC inserted and activated USIM-application.

GSM subscriber: a Mobile Equipment with a SIM inserted or a Mobile Equipment with a UICC inserted and activated SIM-application.

UMTS security context: a state that is established between a user and a serving network domain as a result of the execution of UMTS AKA or as a result of inter RAT mobility from E-UTRAN [28] to UTRAN or GERAN. At both ends "UMTS security context data" is stored, that consists at least of the UMTS cipher/integrity keys CK and IK and the key set identifier KSI. One is still in a UMTS security context, if the keys CK/IK are converted into Kc to work with a GSM BSS.

GSM security context: a state that is established between a user and a serving network domain usually as a result of the execution of GSM AKA. At both ends "GSM security context data" is stored, that consists at least of the GSM cipher key Kc and the cipher key sequence number CKSN.

NWO EX2027
Samsung v Network-1, IPR2026-00114
Page 10 of 73

Quintet, UMTS authentication vector: temporary authentication and key agreement data that enables an VLR/SGSN to engage in UMTS AKA with a particular user. A quintet consists of five elements: a) a network challenge RAND, b) an expected user response XRES, c) a cipher key CK, d) an integrity key IK and e) a network authentication token AUTN.

Triplet, GSM authentication vector: temporary authentication and key agreement data that enables an VLR/SGSN to engage in GSM AKA with a particular user. A triplet consists of three elements: a) a network challenge RAND, b) an expected user response SRES and c) a cipher key Kc.

Authentication vector: either a quintet or a triplet.

Temporary authentication data: either UMTS or GSM security context data or UMTS or GSM authentication vectors.

R98-: Refers to a network node or ME that conforms to R97 or R98 specifications.

R99+: Refers to a network node or ME that conforms to R99 or later specifications.

Rel4- ME: Refers to a ME that conforms to Rel-4 or R99 specifications.

Rel5+ ME: Refers to a ME that conforms to Rel-5 or later specifications.

ME capable of UMTS AKA: either a Rel4- ME that does support USIM-ME interface or a Rel5+ ME.

ME not capable of UMTS AKA: a Rel4- ME that does not support USIM-ME interface or a R98- ME.

3.2 Symbols

For the purposes of the present document, the following symbols apply:

$\|\|$	Concatenation
$\oplus$	Exclusive or
f1	Message authentication function used to compute MAC
f1*	Message authentication function used to compute MAC-S
f2	Message authentication function used to compute RES and XRES
f3	Key generating function used to compute CK
f4	Key generating function used to compute IK
f5	Key generating function used to compute AK in normal procedures
f5*	Key generating function used to compute AK in re-synchronisation procedures
K	Long-term secret key shared between the USIM and the AuC

3.3 Abbreviations

In addition to (and partly in overlap to) the abbreviations included in TR 21.905 [3], for the purposes of the present document, the following abbreviations apply:

AK	Anonymity Key
AKA	Authentication and key agreement
AMF	Authentication management field
AUTN	Authentication Token
AV	Authentication Vector
CK	Cipher Key
CKSN	Cipher key sequence number
CS	Circuit Switched
E-UTRAN	Evolved Universal Terrestrial Radio Access Network
GERAN	GSM/EDGE Radio Access Network
HE	Home Environment
HLR	Home Location Register
IK	Integrity Key
IMSI	International Mobile Subscriber Identity
Kc	64-bit GSM ciphering key
Kc_{128}	128-bit GSM ciphering key

NWO EX2027
Samsung v Network-1, IPR2026-00114
Page 11 of 73

KSI	Key Set Identifier
KSS	Key Stream Segment
LAI	Location Area Identity
MAC	The message authentication code included in AUTN, computed using f1
MAC	The message authentication code included in AUTN, computed using f1*
ME	Mobile Equipment
MS	Mobile Station
MSC	Mobile Services Switching Centre
PS	Packet Switched
P-TMSI	Packet-TMSI
Q	Quintet, UMTS authentication vector
RAI	Routing Area Identifier
RAND	Random challenge
SQN	Sequence number
SQN_{HE}	Individual sequence number for each user maintained in the HLR/AuC
SQN_{MS}	The highest sequence number the USIM has accepted
SGSN	Serving GPRS Support Node
SIM	(GSM) Subscriber Identity Module
SN	Serving Network
SRVCC	Single Radio Voice Call Continuity
T	Triplet, GSM authentication vector
TMSI	Temporary Mobile Subscriber Identity
UEA	UMTS Encryption Algorithm
UIA	UMTS Integrity Algorithm
UICC	UMTS IC Card
USIM	Universal Subscriber Identity Module
UTRAN	Universal Terrestrial Radio Access Network
VLR	Visitor Location Register
XRES	Expected Response

3.4 Conventions

All data variables in this specification are presented with the most significant substring on the left hand side and the least significant substring on the right hand side. A substring may be a bit, byte or other arbitrary length bitstring. Where a variable is broken down into a number of substrings, the leftmost (most significant) substring is numbered 0, the next most significant is numbered 1, and so on through to the least significant.

NWO EX2027
Samsung v Network-1, IPR2026-00114
Page 12 of 73

4 Overview of the security architecture

Figure 1 gives an overview of the complete 3G security architecture.

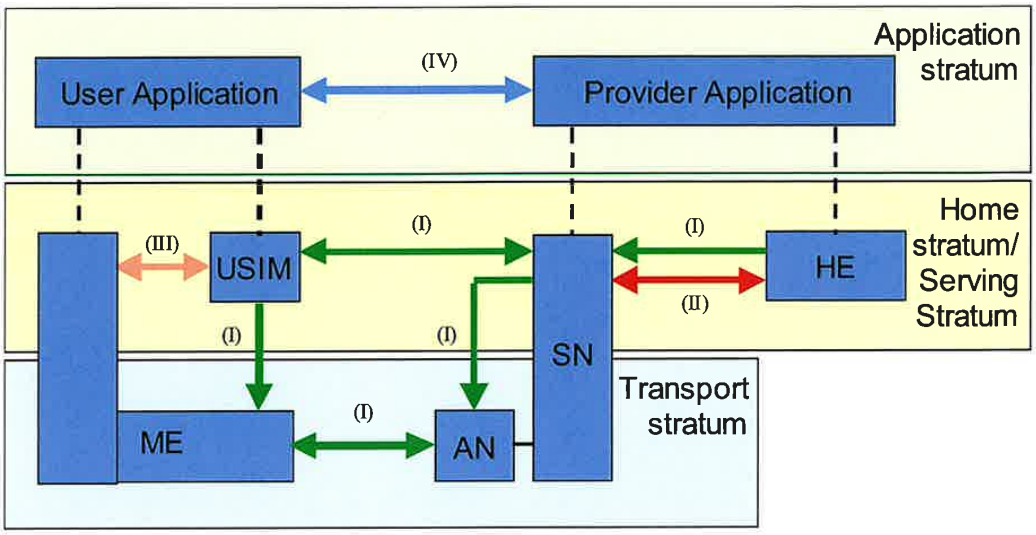

Figure 1: Overview of the security architecture

Five security feature groups are defined. Each of these feature groups meets certain threats and accomplishes certain security objectives:

- **Network access security (I):** the set of security features that provide users with secure access to 3G services, and which in particular protect against attacks on the (radio) access link;
- **Network domain security (II):** the set of security features that enable nodes in the provider domain to securely exchange signalling data, and protect against attacks on the wireline network;
- **User domain security (III):** the set of security features that secure access to mobile stations;
- **Application domain security (IV):** the set of security features that enable applications in the user and in the provider domain to securely exchange messages;
- **Visibility and configurability of security (V):** the set of features that enables the user to inform himself whether a security feature is in operation or not and whether the use and provision of services should depend on the security feature.

Figure 2 gives an overview of the ME registration and connection principles within UMTS with a CS service domain and a PS service domain. As in GSM/GPRS, user (temporary) identification, authentication and key agreement will take place independently in each service domain. User plane traffic will be ciphered using the cipher key agreed for the corresponding service domain while control plane data will be ciphered and integrity protected using the cipher and integrity keys from either one of the service domains. In clause 6 the detailed procedures are defined and when not otherwise stated they are used in both service domains.

NWO EX2027
Samsung v Network-1, IPR2026-00114
Page 13 of 73

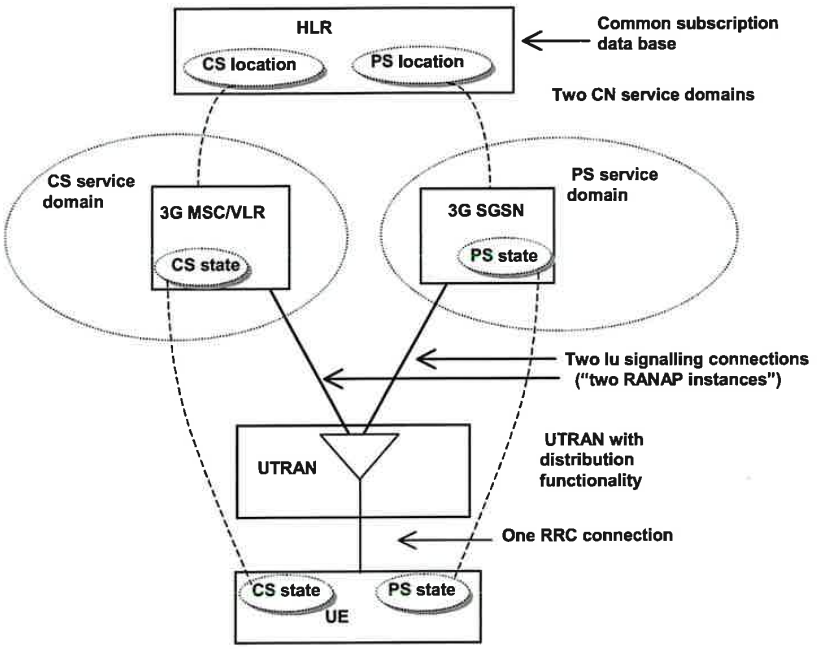

Figure 2: Overview of the ME registration and connection principles within UMTS for the separate CN architecture case when the CN consists of both a CS service domain with evolved MSC/VLR, 3G_MSC/VLR, as the main serving node and an PS service domain with evolved SGSN/GGSN, 3G_SGSN and 3G GGSN, as the main serving nodes (Extract from TS 23.121 [4] – Figure 4-8)

5 Security features

5.1 Network access security

5.1.1 User identity confidentiality

The following security features related to user identity confidentiality are provided:

- **user identity confidentiality:** the property that the permanent user identity (IMSI) of a user to whom a services is delivered cannot be eavesdropped on the radio access link;
- **user location confidentiality:** the property that the presence or the arrival of a user in a certain area cannot be determined by eavesdropping on the radio access link;
- **user untraceability:** the property that an intruder cannot deduce whether different services are delivered to the same user by eavesdropping on the radio access link.

To achieve these objectives, the user is normally identified by a temporary identity by which he is known by the visited serving network. To avoid user traceability, which may lead to the compromise of user identity confidentiality, the user should not be identified for a long period by means of the same temporary identity. To achieve these security features, in addition it is required that any signalling or user data that might reveal the user's identity is ciphered on the radio access link.

NWO EX2027
Samsung v Network-1, IPR2026-00114
Page 14 of 73

Clause 6.1 describes a mechanism that allows a user to be identified on the radio path by means of a temporary identity by which he is known in the visited serving network. This mechanism should normally be used to identify a user on the radio path in location update requests, service requests, detach requests, connection re-establishment requests, etc.

5.1.2 Entity authentication

The following security features related to entity authentication are provided:

- **user authentication:** the property that the serving network corroborates the user identity of the user;
- **network authentication:** the property that the user corroborates that he is connected to a serving network that is authorised by the user's HE to provide him services; this includes the guarantee that this authorisation is recent.

To achieve these objectives, it is assumed that entity authentication should occur at each connection set-up between the user and the network. Two mechanisms have been included: an authentication mechanism using an authentication vector delivered by the user's HE to the serving network, and a local authentication mechanism using the integrity key established between the user and serving network during the previous execution of the authentication and key establishment procedure.

Clause 6.3 describes an authentication and key establishment mechanism that achieves the security features listed above and in addition establishes a secret cipher key (see 5.1.3) and integrity key (see 5.1.4) between the user and the serving network. This mechanism should be invoked by the serving network after a first registration of a user in a serving network and after a service request, location update request, attach request, detach request or connection re-establishment request, when the maximum number of local authentications using the derived integrity key have been conducted.

Clause 6.5 describes the local authentication mechanism. The local authentication mechanism achieves the security features user authentication and network authentication and uses an integrity key established between user and serving network during the previous execution of the authentication and key establishment procedure. This mechanism should be invoked by the serving network after a service request, location update request, attach request, detach request or connection re-establishment request, provided that the maximum number of local authentications using the same derived integrity key has not been reached yet.

5.1.3 Confidentiality

The following security features are provided with respect to confidentiality of data on the network access link:

- **cipher algorithm agreement:** the property that the MS and the SN can securely negotiate the algorithm that they shall use subsequently;
- **cipher key agreement:** the property that the MS and the SN agree on a cipher key that they may use subsequently;
- **confidentiality of user data:** the property that user data cannot be overheard on the radio access interface;
- **confidentiality of signalling data:** the property that signalling data cannot be overheard on the radio access interface;

Cipher key agreement is realised in the course of the execution of the mechanism for authentication and key agreement (see 6.3). Cipher algorithm agreement is realised by means of a mechanism for security mode negotiation between the user and the network (see 6.6.9). This mechanism also enables the selected ciphering algorithm and the agreed cipher key to be applied in the way described in 6.6.

5.1.4 Data integrity

The following security features are provided with respect to integrity of data on the network access link:

- **integrity algorithm agreement:** the property that the MS and the SN can securely negotiate the integrity algorithm that they shall use subsequently;
- **integrity key agreement:** the property that the MS and the SN agree on an integrity key that they may use subsequently;

NWO EX2027
Samsung v Network-1, IPR2026-00114
Page 15 of 73

- **data integrity and origin authentication of signalling data:** the property that the receiving entity (MS or SN) is able to verify that signalling data has not been modified in an unauthorised way since it was sent by the sending entity (SN or MS) and that the data origin of the signalling data received is indeed the one claimed;

Integrity key agreement is realised in the course of the execution of the mechanism for authentication and key agreement (see 6.3). Integrity algorithm agreement is realised by means of a mechanism for security mode negotiation between the user and the network (see 6.6.9). This mechanism also enables the selected integrity algorithm and the agreed integrity key to be applied in the way described in 6.4.

5.1.5 Mobile equipment identification

The SN may request the MS to send it the IMEI or IMEISV of the terminal. The IMEI should be securely stored in the terminal. However, the presentation of this identity to the network is not a security feature and the transmission of the IMEI or IMEISV may be unprotected. Although it is not a security feature, it should not be deleted from UMTS however, as it is useful for other purposes.

5.2 Network domain security

5.2.1 Void

5.2.2 Void

5.2.3 Void

5.2.4 Fraud information gathering system

NOTE: Some feature will be provided which will allow fraud information to be exchanged between 3GMS providers according to time constraints that yet have to be defined.

5.3 User domain security

5.3.1 User-to-USIM authentication

This feature provides the property that access to the USIM is restricted until the USIM has authenticated the user. Thereby, it is ensured that access to the USIM can be restricted to an authorised user or to a number of authorised users. To accomplish this feature, user and USIM must share a secret (e.g. a PIN) that is stored securely in the USIM. The user gets access to the USIM only if he/she proves knowledge of the secret.

This security feature is implemented by means of the mechanism described in TS 31.101 [5].

5.3.2 USIM-Terminal Link

This feature ensures that access to a terminal or other user equipment can be restricted to an authorised USIM. To this end, the USIM and the terminal must share a secret that is stored securely in the USIM and the terminal. If a USIM fails to prove its knowledge of the secret, it will be denied access to the terminal.

This security feature is implemented by means of the mechanism described in TS 22.022 [6].

NWO EX2027
Samsung v Network-1, IPR2026-00114
Page 16 of 73

5.4 Application security

5.4.1 Secure messaging between the USIM and the network

USIM Application Toolkit, as specified in TS 31.111 [15], provides the capability for operators or third party providers to create applications which are resident on the USIM (similar to SIM Application Toolkit in GSM). There exists a need to secure messages which are transferred over the network to applications on the USIM, with the level of security chosen by the network operator or the application provider.

Security features for USIM Application Toolkit are implemented by means of the mechanisms described in TS 23.048 [7]. These mechanisms address the security requirements identified in TS 22.048 [16].

5.4.2 Void

5.4.3 Void

5.4.4 Void

5.5 Security visibility and configurability

5.5.1 Visibility

Although in general the security features should be transparent to the user, for certain events and according to the user's concern, greater user visibility of the operation of security features should be provided. This yields to a number of features that inform the user of security-related events, such as:

- indication of access network encryption: the property that the user is informed whether the confidentiality of user data is protected on the radio access link, in particular when non-ciphered calls are set-up;
- indication of the level of security: the property that the user is informed on the level of security that is provided by the visited network, in particular when a user is handed over or roams into a network with lower security level (3G → 2G).

The ciphering indicator feature is specified in 3GPP TS 22.101 [21].

5.5.2 Configurability

Configurability is the property that that the user can configure whether the use or the provision of a service should depend on whether a security feature is in operation. A service can only be used if all security features, which are relevant to that service and which are required by the configurations of the user, are in operation. The following configurability features are suggested:

- Enabling/disabling user-USIM authentication: the user should be able to control the operation of user-USIM authentication, e.g., for some events, services or use.
- Accepting/rejecting incoming non-ciphered calls: the user should be able to control whether the user accepts or rejects incoming non-ciphered calls;
- Setting up or not setting-up non-ciphered calls: the user should be able to control whether the user sets up connections when ciphering is not enabled by the network;
- Accepting/rejecting the use of certain ciphering algorithms: the user should be able to control which ciphering algorithms are acceptable for use.

NWO EX2027
Samsung v Network-1, IPR2026-00114
Page 17 of 73

6 Network access security mechanisms

6.1 Identification by temporary identities

6.1.1 General

This mechanism allows the identification of a user on the radio access link by means of a temporary mobile subscriber identity (TMSI/P-TMSI). A TMSI /P-TMSI has local significance only in the location area or routing area in which the user is registered. Outside that area it should be a accompanied by an appropriate Location Area Identification (LAI) or Routing Area Identification (RAI) in order to avoid ambiguities. The association between the permanent and temporary user identities is kept by the Visited Location Register (VLR/SGSN) in which the user is registered.

The TMSI/P-TMSI, when available, is normally used to identify the user on the radio access path, for instance in paging requests, location update requests, attach requests, service requests, connection re-establishment requests and detach requests.

The procedures and mechanisms are described in GSM 03.20 [8] and TS 23.060 [9]. The following sections contain a summary of this feature.

6.1.2 TMSI reallocation procedure

The purpose of the mechanism described in this subsection is to allocate a new TMSI/LAI pair to a user by which he may subsequently be identified on the radio access link.

The procedure should be performed after the initiation of ciphering. The ciphering of communication over the radio path is specified in clause 6.6. The allocation of a temporary identity is illustrated in Figure 3.

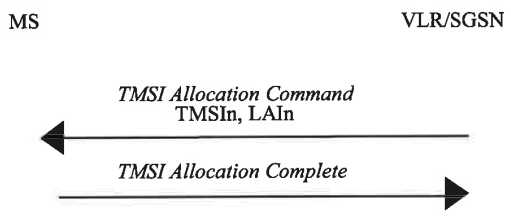

Figure 3: TMSI allocation

The allocation of a temporary identity is initiated by the VLR.

The VLR generates a new temporary identity (TMSIn) and stores the association of TMSIn and the permanent identity IMSI in its database. The TMSI should be unpredictable. The VLR then sends the TMSIn and (if necessary) the new location area identity LAIn to the user.

Upon receipt the user stores TMSIn and automatically removes the association with any previously allocatedTMSI. The user sends an acknowledgement back to the VLR.

Upon receipt of the acknowledgement the VLR removes the association with the old temporary identity TMSIo and the IMSI (if there was any) from its database.

6.1.3 Unacknowledged allocation of a temporary identity

If the serving network does not receive an acknowledgement of the successful allocation of a temporary identity from the user, the network shall maintain the association between the new temporary identity TMSIn and the IMSI and between the old temporary identity TMSIo (if there is any) and the IMSI.

NWO EX2027
Samsung v Network-1, IPR2026-00114
Page 18 of 73

For a user-originated transaction, the network shall allow the user to identify itself by either the old temporary identity TMSIo or the new temporary identity TMSIn. This allows the network to determine the temporary identity stored in the mobile station. The network shall subsequently delete the association between the other temporary identity and the IMSI, to allow the temporary identity to be allocated to another user.

For a network-originated transaction, the network shall identify the user by its permanent identity (IMSI). When radio contact has been established, the network shall instruct the user to delete any stored TMSI. When the network receives an acknowledgement from the user, the network shall delete the association between the IMSI and any TMSI to allow the released temporary identities to be allocated to other users.

Subsequently, in either of the cases above, the network may initiate the normal TMSI reallocation procedure.

Repeated failure of TMSI reallocation (passing a limit set by the operator) may be reported for O&M action.

6.1.4 Location update

In case a user identifies itself using a TMSIo/LAIo pair that was assigned by the visited VLRn the IMSI can normally be retrieved from the database. If this is not the case, the visited VLRn should request the user to identify itself by means of its permanent user identity. This mechanism is described in 6.2.

In case a user identifies itself using a TMSIo/LAIo pair that was not assigned by the visited VLRn and the visited VLRn and the previously visited VLRo exchange authentication data, the visited VLRn should request the previously visited VLRo to send the permanent user identity. This mechanism is described in 6.3.4, it is integrated in the mechanism for distribution of authentication data between VLRs. If the previously visited VLRo cannot be contacted or cannot retrieve the user identity, the visited VLRn should request the user to identify itself by means of its permanent user identity. This mechanism is described in 6.2.

6.2 Identification by a permanent identity

The mechanism described in here allows the identification of a user on the radio path by means of the permanent subscriber identity (IMSI).

The mechanism should be invoked by the serving network whenever the user cannot be identified by means of a temporary identity. In particular, it should be used when the user registers for the first time in a serving network, or when the serving network cannot retrieve the IMSI from the TMSI by which the user identifies itself on the radio path.

The mechanism is illustrated in Figure 4.

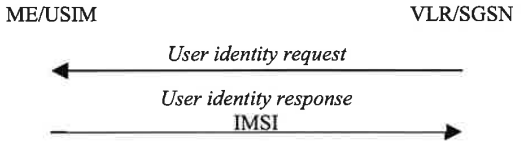

Figure 4: Identification by the permanent identity

The mechanism is initiated by the visited VLR/SGSN that requests the user to send its permanent identity. The user's response contains the IMSI in cleartext. This represents a breach in the provision of user identity confidentiality.

6.3 Authentication and key agreement

6.3.1 General

The mechanism described here achieves mutual authentication by the user and the network showing knowledge of a secret key K which is shared between and available only to the USIM and the AuC in the user's HE. In addition the USIM and the HE keep track of counters SQN_{MS} and SQN_{HE} respectively to support network authentication. The sequence number SQN_{HE} is an individual counter for each user and the sequence number SQN_{MS} denotes the highest sequence number the USIM has accepted.

NWO EX2027
Samsung v Network-1, IPR2026-00114
Page 19 of 73

The method was chosen in such a way as to achieve maximum compatibility with the current GSM security architecture and facilitate migration from GSM to UMTS. The method is composed of a challenge/response protocol identical to the GSM subscriber authentication and key establishment protocol combined with a sequence number-based one-pass protocol for network authentication derived from ISO/IEC 9798-4 [10] (section 5.1.1).

An overview of the mechanism is shown in Figure 5.

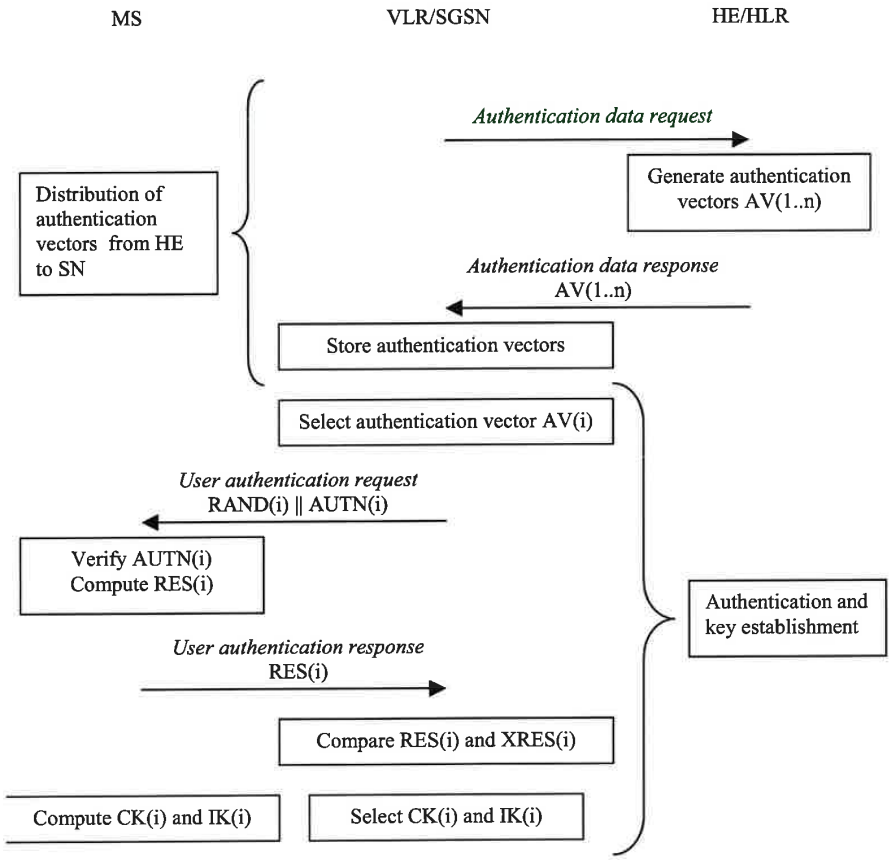

Figure 5: Authentication and key agreement

Upon receipt of a request from the VLR/SGSN, the HE/AuC sends an ordered array of *n* authentication vectors (the equivalent of a GSM "triplet") to the VLR/SGSN. The authentication vectors are ordered based on sequence number. Each authentication vector consists of the following components: a random number RAND, an expected response XRES, a cipher key CK, an integrity key IK and an authentication token AUTN. Each authentication vector is good for one authentication and key agreement between the VLR/SGSN and the USIM.

When the VLR/SGSN initiates an authentication and key agreement, it selects the next authentication vector from the ordered array and sends the parameters RAND and AUTN to the user. Authentication vectors in a particular node are used on a first-in / first-out basis. The USIM checks whether AUTN can be accepted and, if so, produces a response RES which is sent back to the VLR/SGSN. The USIM also computes CK and IK. The VLR/SGSN compares the received RES with XRES. If they match the VLR/SGSN considers the authentication and key agreement exchange to be successfully completed. The established keys CK and IK will then be transferred by the USIM and the VLR/SGSN to the entities which perform ciphering and integrity functions.

VLR/SGSNs can offer secure service even when HE/AuC links are unavailable by allowing them to use previously derived cipher and integrity keys for a user so that a secure connection can still be set up without the need for an

NWO EX2027
Samsung v Network-1, IPR2026-00114
Page 20 of 73

authentication and key agreement. Authentication is in that case based on a shared integrity key, by means of data integrity protection of signalling messages (see 6.4).

The authenticating parties shall be the AuC of the user's HE (HE/AuC) and the USIM in the user's mobile station. The mechanism consists of the following procedures:

A procedure to distribute authentication information from the HE/AuC to the VLR/SGSN. This procedure is described in 6.3.2. The VLR/SGSN is assumed to be trusted by the user's HE to handle authentication information securely. It is also assumed that the intra-system links between the VLR/SGSN to the HE/AuC are adequately secure. It is further assumed that the user trusts the HE.

A procedure to mutually authenticate and establish new cipher and integrity keys between the VLR/SGSN and the MS. This procedure is described in 6.3.3.

A procedure to distribute authentication data from a previously visited VLR to the newly visited VLR. This procedure is described in 6.3.4. It is also assumed that the links between VLR/SGSNs are adequately secure.

6.3.2 Distribution of authentication data from HE to SN

The purpose of this procedure is to provide the VLR/SGSN with an array of fresh authentication vectors from the user's HE to perform a number of user authentications.

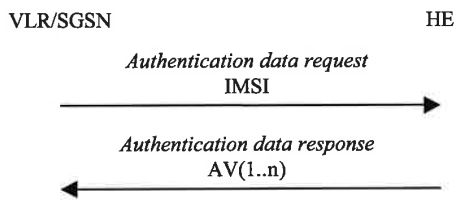

Figure 6: Distribution of authentication data from HE to VLR/SGSN

The VLR/SGSN invokes the procedures by requesting authentication vectors to the HE/AuC.

The *authentication data request* shall include the IMSI and the requesting node type (PS or CS).

Upon the receipt of the *authentication data request* from the VLR/SGSN, the HE may have pre-computed the required number of authentication vectors and retrieve them from the HLR database or may compute them on demand. The HE/AuC sends an authentication response back to the VLR/SGSN that contains an ordered array of n authentication vectors AV(1..n). The authentication vectors are ordered based on sequence number.

Figure 7 shows the generation of an authentication vector AV by the HE/AuC.

NWO EX2027
Samsung v Network-1, IPR2026-00114
Page 21 of 73

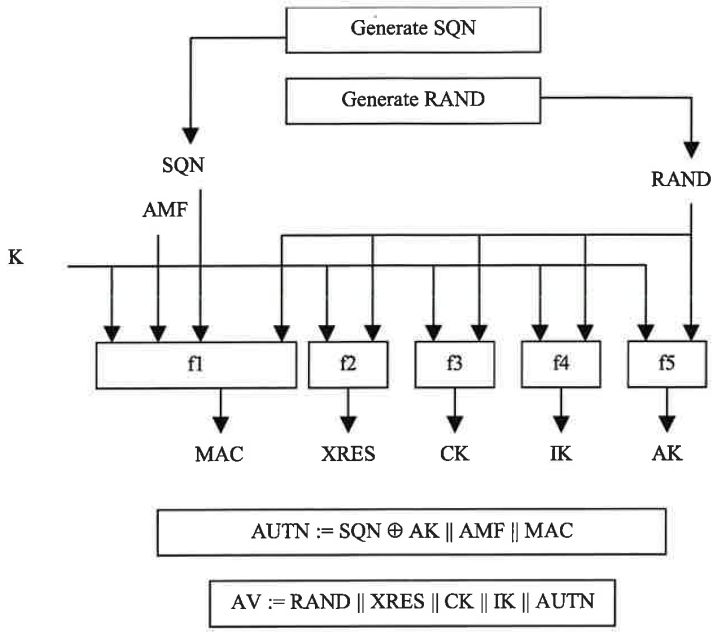

Figure 7: Generation of authentication vectors

The HE/AuC starts with generating a fresh sequence number SQN and an unpredictable challenge RAND.

For each user the HE/AuC keeps track of a counter: SQN_{HE}

The HE has some flexibility in the management of sequence numbers, but some requirements need to be fulfilled by the mechanism used:

a) The generation mechanism shall allow a re-synchronisation procedure in the HE described in section 6.3.5.

b) In case the SQN exposes the identity and location of the user, the AK may be used as an anonymity key to conceal it.

c) The generation mechanism shall allow protection against wrap around the counter in the USIM.
A method how to achieve this is given in informative Annex C.2.

The mechanisms for verifying the freshness of sequence numbers in the USIM shall to some extent allow the out-of-order use of sequence numbers. This is to ensure that the authentication failure rate due to synchronisation failures is sufficiently low. This requires the capability of the USIM to store information on past successful authentication events (e.g. sequence numbers or relevant parts thereof). The mechanism shall ensure that a sequence number can still be accepted if it is among the last x = 32 sequence numbers generated. This shall not preclude that a sequence number is rejected for other reasons such as a limit on the age for time-based sequence numbers.
The same minimum number x needs to be used across the systems to guarantee that the synchronisation failure rate is sufficiently low under various usage scenarios, in particular simultaneous registration in the CS- and the PS-service domains, user movement between VLRs/SGSNs which do not exchange authentication information, super-charged networks.

The use of SQN_{HE} is specific to the method of generation sequence numbers. A method is specified in Annex C.1 how to generate a fresh sequence number. A method is specified in Annex C.2 how to verify the freshness of a sequence number.

An authentication and key management field AMF is included in the authentication token of each authentication vector. Annex H defines the usage of the AMF. Example uses of the proprietary part of the AMF are included in Annex F.

Subsequently the following values are computed:

- a message authentication code MAC = $f1_K$(SQN || RAND || AMF) where f1 is a message authentication function;
- an expected response XRES = $f2_K$ (RAND) where f2 is a (possibly truncated) message authentication function;
- a cipher key CK = $f3_K$ (RAND) where f3 is a key generating function;
- an integrity key IK = $f4_K$ (RAND) where f4 is a key generating function;
- an anonymity key AK = $f5_K$ (RAND) where f5 is a key generating function or f5 ≡ 0.

Finally the authentication token AUTN = SQN ⊕ AK || AMF || MAC is constructed.

Here, AK is an anonymity key used to conceal the sequence number as the latter may expose the identity and location of the user. The concealment of the sequence number is to protect against passive attacks only. If no concealment is needed then f5 ≡ 0 (AK = 0).

6.3.3 Authentication and key agreement

The purpose of this procedure is to authenticate the user and establish a new pair of cipher and integrity keys between the VLR/SGSN and the USIM. During the authentication, the USIM verifies the freshness of the authentication vector that is used.

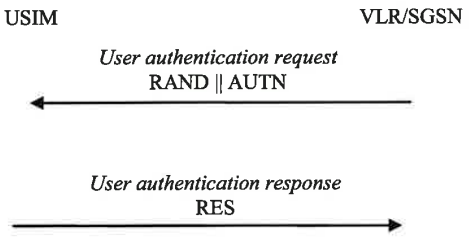

Figure 8: Successful UMTS Authentication and Key Agreement

The VLR/SGSN invokes the procedure by selecting the next unused authentication vector from the ordered array of authentication vectors in the VLR/SGSN database. Authentication vectors in a particular node are used on a first-in / first-out basis. The VLR/SGSN sends to the USIM the random challenge RAND and an authentication token for network authentication AUTN from the selected authentication vector.

Upon receipt the user proceeds as shown in Figure 9.

NWO EX2027
Samsung v Network-1, IPR2026-00114
Page 23 of 73

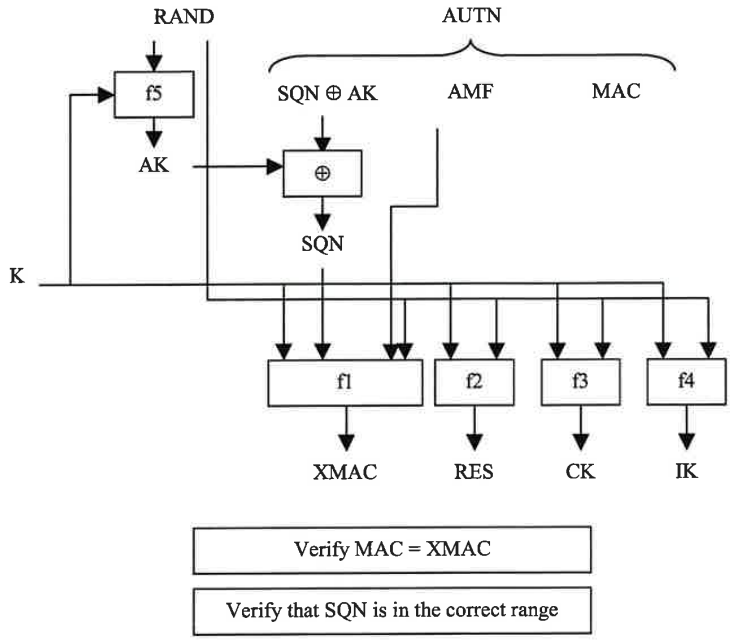

Figure 9: User authentication function in the USIM

Upon receipt of RAND and AUTN the USIM first computes the anonymity key AK = $f5_K$ (RAND) and retrieves the sequence number SQN = (SQN ⊕ AK) ⊕ AK.

Next the USIM computes XMAC = $f1_K$ (SQN || RAND || AMF) and compares this with MAC which is included in AUTN. If they are different, the user sends *an authentication failure* message back to the VLR/SGSN with an indication of the cause and the user abandons the procedure. In this case, VLR/SGSN shall initiate an Authentication Failure Report procedure towards the HLR as specified in section 6.3.6. VLR/SGSN may also decide to initiate a new identification and authentication procedure towards the user, cf. TS 24.008 [35].

Next the USIM verifies that the received sequence number SQN is in the correct range.

If the USIM considers the sequence number to be not in the correct range, it sends *synchronisation failure* back to the VLR/SGSN including an appropriate parameter, and abandons the procedure.

The synchronisation failure message contains the parameter AUTS. It is AUTS = Conc(SQN_{MS}) || MAC-S. Conc(SQN_{MS}) = SQN_{MS} ⊕ $f5^*_K$(RAND) is the concealed value of the counter SQN_{MS} in the MS, and MAC-S = $f1^*_K$(SQN_{MS} || RAND || AMF) where RAND is the random value received in the current user authentication request. f1* is a message authentication code (MAC) function with the property that no valuable information can be inferred from the function values of f1* about those of f1, ... , f5, f5* and vice versa. f5* is the key generating function used to compute AK in re-synchronisation procedures with the property that no valuable information can be inferred from the function values of f5* about those of f1, f1*, f2, ... , f5 and vice versa.

The AMF used to calculate MAC-S assumes a dummy value of all zeros so that it does not need to be transmitted in the clear in the re-synch message.

The construction of the parameter AUTS in shown in the following Figure 10:

NWO EX2027
Samsung v Network-1, IPR2026-00114
Page 24 of 73

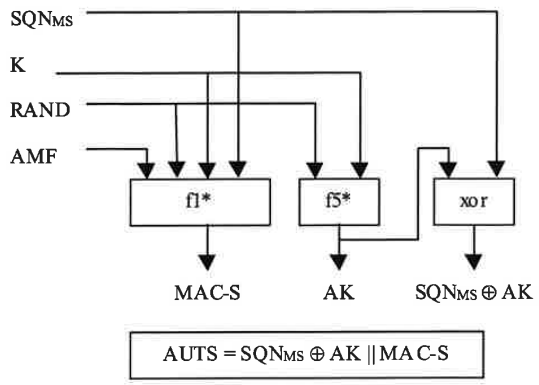

Figure 10: Construction of the parameter AUTS

If the sequence number is considered to be in the correct range however, the USIM computes RES = $f2_K$ (RAND) and includes this parameter in a *user authentication response* back to the VLR/SGSN. Finally the USIM computes the cipher key CK = $f3_K$ (RAND) and the integrity key IK = $f4_K$ (RAND). Note that if this is more efficient, RES, CK and IK could also be computed earlier at any time after receiving RAND. If the USIM also supports conversion function c3, it shall derive the 64-bit GSM cipher key Kc from the UMTS cipher/integrity keys CK and IK. UMTS keys are sent to the MS along with the derived 64-bit GSM key for UMTS-GSM interoperability purposes. USIM shall store original CK, IK until the next successful execution of AKA.

Upon receipt of *user authentication response* the VLR/SGSN compares RES with the expected response XRES from the selected authentication vector. If XRES equals RES then the authentication of the user has passed. The SGSN shall compute the 128-bit GSM ciphering key Kc_{128} according to annex B.5 if it is to use a 128-bit GSM ciphering algorithm. The VLR/MSC shall compute the 128-bit GSM ciphering key Kc_{128} according to annex B.5 if it signals a 128-bit GSM ciphering algorithm as a permitted GSM ciphering algorithm to the BSS. The VLR/SGSN also selects the appropriate cipher key CK and integrity key IK from the selected authentication vector. If XRES and RES are different, VLR/SGSN shall initiate an Authentication Failure Report procedure towards the HLR as specified in section 6.3.6. VLR/SGSN may also decide to initiate a new identification and authentication procedure towards the user, cf. TS 24.008 [35].

Re-use and re-transmission of (RAND, AUTN)

The verification of the SQN by the USIM will cause the MS to reject an attempt by the VLR/SGSN to re-use a quintet to establish a particular UMTS security context more than once. In general therefore the VLR/SGSN shall use a quintet only once.

There is one exception however: in the event that the VLR/SGSN has sent out an *authentication request* using a particular quintet and does not receive a response message (*authentication response* or *authentication failure*) from the MS, it may re-transmit the *authentication request* using the same quintet. However, as soon as a response message arrives no further re-transmissions are allowed. If after the initial transmission or after a series of re-transmissions no response arrives, retransmissions may be abandoned. If retransmissions are abandoned then the VLR/SGSN shall delete the quintet. At the MS side, in order to allow this re-transmission without causing additional re-synchronisation procedures, the ME shall store for the PS domain (and optionally the CS domain) the last received RAND as well as the corresponding RES, CK and IK. If the USIM returned SRES and Kc (for GSM access), the ME shall store these values. When the ME receives an *authentication request* and discovers that a RAND is repeated, it shall re-transmit the response. The ME shall delete the stored values RAND, RES and SRES (if they exist) as soon as the 3G security mode command or the GSM cipher mode command is received by the ME or the connection is aborted. If the ME can handle the retransmission mechanism for CS domain then it shall be able to handle the retransmission for both PS and CS domain simultaneously.

NWO EX2027
Samsung v Network-1, IPR2026-00114
Page 25 of 73

6.3.4 Distribution of IMSI and temporary authentication data within one serving network domain

The purpose of this procedure is to provide a newly visited VLR/SGSN with temporary authentication data from a previously visited VLR/SGSN within the same serving network domain.

The procedure is shown in Figure 11.

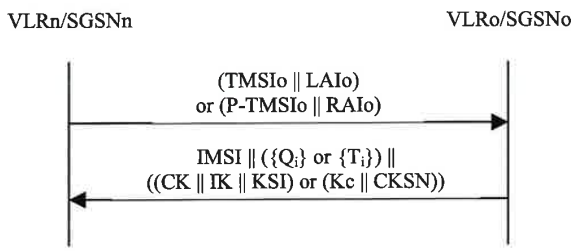

Figure 11: Distribution of IMSI and temporary authentication data within one serving network domain

The procedure shall be invoked by the newly visited VLRn/SGSNn after the receipt of a location update request (resp. routing area update request) from the user wherein the user is identified by means of a temporary user identity TMSIo (resp. P-TMSIo) and the location area identity LAIo (resp. routing area identity RAIo) under the jurisdiction of a previously visited VLRo/SGSNo that belongs to the same serving network domain as the newly visited VLRn/SGSNn.

The protocol steps are as follows:

a) The VLRn/SGSNn sends a *user identity request* to the VLRo/SGSNo, this message contains TMSIo and LAIo (resp. P-TMSIo and RAIo).

b) The VLRo/SGSNo searches the user data in the database.

   If the user is found, the VLRo/SGSNo shall send a *user identity response* back that:

   i) shall include the IMSI,

   ii) may include a number of unused authentication vectors (quintets or triplets) ordered on a first-in / first-out basis, and

   iii) may include the current security context data: CK, IK and KSI (UMTS) or Kc and CKSN (GSM).

   The SGSNn shall derive Kc_{128} from the current security context data according to annex B.5 if it received a CK/IK pair and KSI from the SGSNo and if the SGSNn is to use a 128-bit GSM ciphering algorithm in GSM. The VLRn shall derive Kc_{128} from the current security context data according to annex B.5 if it received a CK/IK pair and KSI from the VLRo and if the VLRn is to signal a 128-bit GSM ciphering algorithm as a permitted ciphering algorithm to the BSS in GSM.

   The VLRo/SGSNo subsequently deletes the authentication vectors which have been sent and the data elements on the current security context.

   If the user cannot be identified the VLRo/SGSNo shall send a *user identity response* indicating that the user identity cannot be retrieved.

c) If the VLRn/SGSNn receives a *user identity response* with an IMSI, it creates an entry and stores any authentication vectors and any data on the current security context that may be included.

   If the VLRn/SGSNn receives a *user identity response* indicating that the user could not be identified, it shall initiate the user identification procedure described in 6.2.

NWO EX2027
Samsung v Network-1, IPR2026-00114
Page 26 of 73

6.3.5 Re-synchronisation procedure

A VLR/SGSN may send two types of *authentication data requests* to the HE/AuC, the (regular) one described in subsection 6.3.2 and one used in case of synchronisation failures, described in this subsection.

Upon receiving a *synchronisation failure* message from the user, the VLR/SGSN sends an *authentication data request* with a "*synchronisation failure indication*" to the HE/AuC, together with the parameters:

- *RAND* sent to the MS in the preceding user authentication request, and
- *AUTS* received by the VLR/SGSN in the response to that request, as described in subsection 6.3.3.

An VLR/SGSN will not react to unsolicited "synchronisation failure indication" messages from the MS.

The VLR/SGSN does not send new user authentication requests to the user before having received the response to its authentication data request from the HE/AuC (or before it is timed out).

When the HE/AuC receives an *authentication data request* with a "*synchronisation failure indication*" it acts as follows:

1. The HE/AuC retrieves SQN_{MS} from Conc(SQN_{MS}) by computing Conc(SQN_{MS}) $\oplus f5^*_K(RAND)$.
2. The HE/AuC checks if SQN_{HE} is in the correct range, i.e. if the next sequence number generated SQN_{HE} using would be accepted by the USIM.
3. If SQN_{HE} is in the correct range then the HE/AuC continues with step (6), otherwise it continues with step (4).
4. The HE/AuC verifies *AUTS* (cf. subsection 6.3.3).
5. If the verification is successful the HE/AuC resets the value of the counter SQN_{HE} to SQN_{MS}.
6. The HE/AuC sends an *authentication data response* with a new batch of authentication vectors to the VLR/SGSN. If the counter SQN_{HE} was not reset then these authentication vectors can be taken from storage, otherwise they are newly generated after resetting SQN_{HE}. In order to reduce the real-time computation burden on the HE/AuC, the HE/AuC may also send only a single authentication vector in the latter case.

Whenever the VLR/SGSN receives a new batch of authentication vectors from the HE/AuC in an authentication data response to an authentication data request with synchronisation failure indication it deletes the old ones for that user in the VLR/SGSN.

The user may now be authenticated based on a new authentication vector from the HE/AuC. Figure 12 shows how re-synchronisation is achieved by combining a *user authentication request* answered by a *synchronisation failure* message (as described in section 6.3.3) with an *authentication data request* with *synchronisation failure* indication answered by an *authentication data response* (as described in this section).

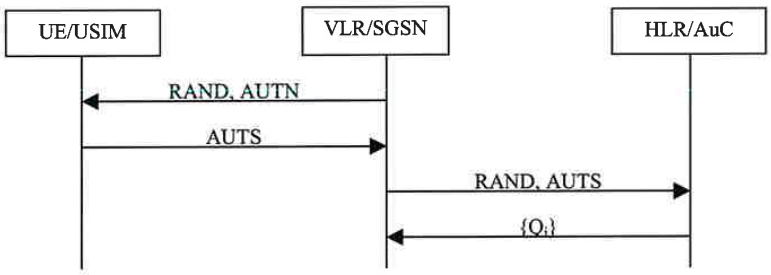

Figure 12: Resynchronisation mechanism

6.3.6 Reporting authentication failures from the SGSN/VLR to the HLR

The purpose of this procedure is to provide a mechanism for reporting authentication failures from the serving environment back to the home environment.

The procedure is shown in Figure 13.

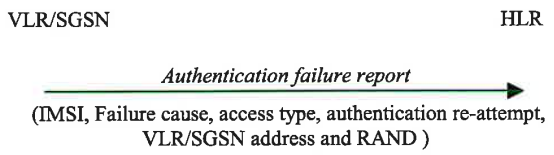

Figure 13: Reporting authentication failure from VLR/SGSN to HLR

The procedure is invoked by the serving network VLR/SGSN when the authentication procedure fails. The *authentication failure report* shall contain:

1. Subscriber identity;
2. Failure cause code. The possible failure causes are either that the network signature was wrong or that the user response was wrong;
3. Access type. This indicates the type of access that initiated the authentication procedure;
4. Authentication re-attempt. This indicates whether the failure was produced in a normal authentication attempt or it was due to an authentication reattempt (there was a previous unsuccessful authentication). Details are provided in subclause 6.3.6.1;
5. VLR/SGSN address;
6. RAND. This number uniquely identifies the specific AV that failed authentication.

The HE may decide to cancel the location of the user after receiving an *authentication failure report* and may store the received data so that further processing to detect possible fraud situations could be performed.

6.3.6.1 Authentication re-attempt

The serving network sets the Authentication re-attempt to "true" if the second authentication described in the following cases results in an authentication failure report:

- authentication with (P-)TMSI failed in MS (reject cause 'MAC failure') and new authentication procedure (re-attempt) is taken because an IMSI obtained by the followed IDENTITY REQUEST procedure does not match to the original IMSI that linked with (P-)TMSI.
- authentication failed in MS (reject cause 'GSM authentication unacceptable') and new authentication procedure (re-attempt) is taken after MSC obtains UMTS authentication vectors from HLR.
- authentication failed in MS (reject cause 'synch failure') and new authentication procedure (re-attempt) is taken after MSC obtains new authentication vectors from HLR for re-synchronisation.
- SRES mismatches with (P-)TMSI in VLR/SGSN and new authentication procedure (re-attempt) is taken because an IMSI obtained by the followed IDENTITY REQUEST procedure does not match to the original IMSI that linked with (P-)TMSI.

Otherwise Authentication re-attempt is set to "False".

NWO EX2027
Samsung v Network-1, IPR2026-00114
Page 28 of 73

6.3.7 Length of authentication parameters

The authentication key (K) shall have a length of 128 bits.

The random challenge (RAND) shall have a length of 128 bits.

Sequence numbers (SQN) shall have a length of 48 bits.

The anonymity key (AK) shall have a length of 48 bits.

The authentication management field (AMF) shall have a length of 16 bits.

The message authentication codes MAC in AUTN and MAC-S in AUTS shall have a length of 64 bits.

The cipher key (CK) shall have a length of 128 bits.

The integrity key (IK) shall have a length of 128 bits.

The authentication response (RES) shall have a variable length of 4-16 octets.

6.4 Local authentication and connection establishment

Local authentication is obtained by integrity protection functionality.

6.4.1 Cipher key and integrity key setting

Authentication and key setting are triggered by the authentication procedure and described in 6.3. Authentication and key setting may be initiated by the network as often as the network operator wishes. Key setting can occur as soon as the identity of the mobile subscriber (i.e. P-TMSI, TMSI or IMSI) is known by the VLR/SGSN. The CK and IK are stored in the VLR/SGSN and transferred to the RNC when needed. The CK and IK for the CS domain are stored on the USIM and updated at the next authentication from this domain as specified in subclause 6.8.1.5. The CK and IK for the PS domain are stored on the USIM and updated at the next authentication from this domain as specified in subclause 6.8.1.5.

If an authentication procedure is performed during a connection (PS or CS mode), the new cipher key CK and integrity key IK shall be taken in use in both the RNC and the ME as part of the security mode set-up procedure (see 6.4.5) that follows the authentication procedure.

6.4.2 Ciphering and integrity mode negotiation

When an MS wishes to establish a connection with the network, the MS shall indicate to the network in the MS/USIM Classmark which cipher and integrity algorithms the MS supports. This information itself must be integrity protected. As it is the case that the RNC does not have the integrity key IK when receiving the MS/USIM Classmark this information must be stored in the RNC. The data integrity of the classmark is performed, during the security mode set-up procedure by use of the most recently generated IK (see section 6.4.5).

The network shall compare its integrity protection capabilities and preferences, and any special requirements of the subscription of the MS, with those indicated by the MS and act according to the following rules:

1) If the MS and the network have no versions of the UIA algorithm in common, then the connection shall be released.

2) If the MS and the network have at least one version of the UIA algorithm in common, then the network shall select one of the mutually acceptable versions of the UIA algorithm for use on that connection.

NWO EX2027
Samsung v Network-1, IPR2026-00114
Page 29 of 73

The network shall compare its ciphering capabilities and preferences, and any special requirements of the subscription of the MS, with those indicated by the MS and act according to the following rules:

1) If the MS and the network have no versions of the UEA algorithm in common and the network is not prepared to use an unciphered connection, then the connection shall be released.

2) If the MS and the network have no versions of the UEA algorithm in common and the user (respectively the user's HE) and the network are willing to use an unciphered connection, then an unciphered connection shall be used.

3) If the MS and the network have at least one version of the UEA algorithm in common, then the network shall select one of the mutually acceptable versions of the UEA algorithm for use on that connection.

Because of the separate mobility management for CS and PS services, one CN domain may, independent of the other CN, establish a connection to one and the same MS. Change of ciphering and integrity mode (algorithms) at establishment of a second MS to CN connection shall not be permitted. The preferences and special requirements for the ciphering and integrity mode setting shall be common for both domains. (e.g. the order of preference of the algorithms).

6.4.3 Cipher key and integrity key lifetime

Authentication and key agreement, which generates cipher/integrity keys, is not mandatory at call set-up, and there is therefore the possibility of unlimited and malicious re-use of compromised keys. A mechanism is needed to ensure that a particular cipher/integrity key set is not used for an unlimited period of time, to avoid attacks using compromised keys. The USIM shall therefore contain a mechanism to limit the amount of data that is protected by an access link key set.

Each time an RRC connection is released the values $START_{CS}$ and $START_{PS}$ of the bearers that were protected in that RRC connection are compared with the maximum value, THRESHOLD. If $START_{CS}$ and/or $START_{PS}$ have reached the maximum value (THRESHOLD), the ME marks the START value in the USIM for the corresponding core network domain(s) as invalid by setting the $START_{CS}$ and/or $START_{PS}$ to THRESHOLD, deletes the cipher key and the integrity key stored on the USIM and sets the KSI to invalid (refer to section 6.4.4). Otherwise, the $START_{CS}$ and $START_{PS}$ are stored in the USIM. The maximum value THRESHOLD is set by the operator and stored in the USIM.

When the next RRC connection is established START values are read from the USIM. Then, the ME shall trigger the generation of a new access link key set (a cipher key and an integrity key) if $START_{CS}$ and/or $START_{PS}$ has reached the maximum value THRESHOLD, for the corresponding core network domain(s).

This mechanism will ensure that a cipher/integrity key set cannot be reused beyond the limit set by the operator.

When the user is attached to a UTRAN, a R99+ ME with a SIM inserted shall use a default value for maximum value of $START_{CS}$ or $START_{PS}$ as described in section 6.8.2.4.

6.4.4 Cipher key and integrity key identification

The key set identifier (KSI) is a number which is associated with the cipher and integrity keys derived during authentication. The key set identifier is allocated by the network and sent with the authentication request message to the mobile station where it is stored together with the calculated cipher key CK and integrity key IK. KSI in UMTS corresponds to CKSN in GSM. The USIM stores one KSI/CKSN for the PS domain key set and one KSI/CKSN for the CS domain key set.

The purpose of the key set identifier is to make it possible for the network to identify the cipher key CK and integrity key IK which are stored in the mobile station without invoking the authentication procedure. This is used to allow re-use of the cipher key CK and integrity key IK during subsequent connection set-ups.

KSI and CKSN have the same format. The key set identifier is three bits. Seven values are used to identify the key set. A value of '111' is used by the mobile station to indicate that a valid key is not available for use. At deletion of the cipher key and integrity key, the KSI is set to '111'. The value '111' in the other direction from network to mobile station is reserved.

NWO EX2027
Samsung v Network-1, IPR2026-00114
Page 30 of 73

6.4.5 Security mode set-up procedure

This section describes one common procedure for both ciphering and integrity protection set-up. It is mandatory to start integrity protection of signalling messages by use of this procedure at each new signalling connection establishment between MS and VLR/SGSN. The five exceptions when it is not mandatory to start integrity protection are:

- If the only purpose with the signalling connection establishment and the only result is periodic location registration, i.e. no change of any registration information.
- If there is no MS-VLR/SGSNsignalling after the initial L3 signalling message sent from MS to VLR/SGSN, i.e. in the case of deactivation indication sent from the MS followed by connection release.
- If the only MS-VLR/SGSN signalling after the initial L3 signalling message sent from MS to VLR/SGSN, and possible user identity request and authentication (see below), is a reject signalling message followed by a connection release. However, it shall be mandatory for the VLR/SGSN to start integrity protection before sending a reject signalling message that causes the CSG list on the UE to be modified.
- If the call is an emergency call teleservice as defined in TS 22.003, see section 6.4.9.2 below.
- If the PS connection establishment is for an emergency session, see clause 6.4.9.2 below.

When the integrity protection shall be started, the only procedures between MS and VLR/SGSN that are allowed after the initial connection request (i.e. the initial Layer 3 message sent to VLR/SGSN) and before the security mode set-up procedure are the following:

- Identification by a permanent identity (i.e. request for IMSI, IMEI or IMEISV), and
- Authentication and key agreement.

The message sequence flow below describes the information transfer at initial connection establishment, possible authentication and start of integrity protection and possible ciphering.

NWO EX2027
Samsung v Network-1, IPR2026-00114
Page 31 of 73

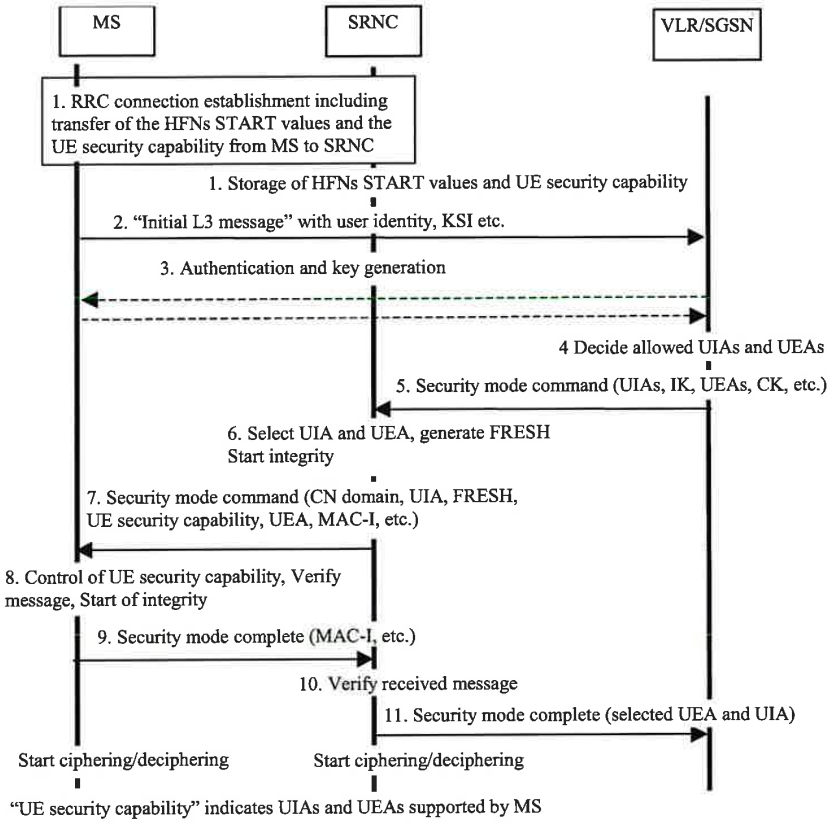

Figure 14: Local authentication and connection set-up

NOTE 1: The network must have the "UE security capability" information before the integrity protection can start, i.e. the "UE security capability" must be sent to the network in an unprotected message. Returning the "UE security capability" later on to the UE in a protected message will give UE the possibility to verify that it was the correct "UE security capability" that reached the network.

Detailed description of the flow above:

1. RRC connection establishment includes the transfer from MS to RNC of the ME security capability optionally the GSM Classmarks 2 and 3 and the START values for the CS service domain respective the PS service domain. The UE security capability information includes the ciphering capabilities (UEAs) and the integrity capabilities (UIAs) of the MS. The START values and the UE security capability information are stored in the SRNC. If the GSM Clasmarks 2 and 3 are transmitted during the RRC Connection establishment, the RNC must store the GSM ciphering capability of the UE (see also message 7).

2. The MS sends the Initial L3 message (Location update request, CM service request, Routing area update request, attach request, paging response etc.) to the VLR/SGSN. This message contains e.g. the user identity and the KSI. The included KSI (Key Set Identifier) is the KSI allocated by the CS service domain or PS service domain at the last authentication for this CN domain.

3. User identity request may be performed (see 6.2). Authentication of the user and generation of new security keys (IK and CK) may be performed (see 6.3.3). A new KSI will then also be allocated.

4. The VLR/SGSN determines which UIAs and UEAs that are allowed to be used in order of preference.

NWO EX2027
Samsung v Network-1, IPR2026-00114
Page 32 of 73

5. The VLR/SGSN initiates integrity and ciphering by sending the RANAP message Security Mode Command to SRNC. This message contains an ordered list of allowed UIAs in order of preference, and the IK to be used. If ciphering shall be started, it contains the ordered list of allowed UEAs in order of preference, and the CK to be used. If a new authentication and security key generation has been performed (see 3 above), this shall be indicated in the message sent to the SRNC. The indication of new generated keys implies that the START value to be used shall be reset (i.e. set to zero) at start use of the new keys. Otherwise, it is the START value already available in the SRNC that shall be used (see 1. above). VLR/SGSN shall treat the keyset as "new" only if the authentication and security key generation was performed while in UTRAN, and the keyset has not been used for this UE in a previous successful RANAP Security Mode Control, BSSMAP Cipher Mode Control procedure or in a successful Handover/Relocation, otherwise the keyset shall be considered to be "old".

6. The SRNC decides which algorithms to use by selecting the highest preference algorithm from the list of allowed algorithms that matches any of the algorithms supported by the MS (see 6.4.2). The SRNC generates a random value FRESH and initiates the downlink integrity protection. If the requirements received in the Security mode command can not be fulfilled, the SRNC sends a SECURITY MODE REJECT message to the requesting VLR/SGSN. The further actions are described in 6.4.2.

7. The SRNC generates the RRC message Security mode command. The message includes the ME security capability, optionally the GSM ciphering capability (if received during RRC Connection establishment), the UIA and FRESH to be used and if ciphering shall be started also the UEA to be used. Additional information (start of ciphering) may also be included. Because of that the MS can have two ciphering and integrity key sets, the network must indicate which key set to use. This is obtained by including a CN type indicator information in the Security mode command message. Before sending this message to the MS, the SRNC generates the MAC-I (Message Authentication Code for Integrity) and attaches this information to the message.

8. At reception of the Security mode command message, the MS controls that the "UE security capability" received is equal to the "UE security capability" sent in the initial message. The same applies to the GSM ciphering capability if it was included in the RRC Connection Establishment. The MS computes XMAC-I on the message received by using the indicated UIA, COUNT-I generated from the stored START and the received FRESH parameter. The MS verifies the integrity of the message by comparing the received MAC-I with the generated XMAC-I.

9. If all controls are successful, the MS compiles the RRC message Security mode complete and generates the MAC-I for this message. If any control is not successful, the procedure ends in the MS.

10. At reception of the response message, the SRNC computes the XMAC-I on the message. The SRNC verifies the data integrity of the message by comparing the received MAC-I with the generated XMAC-I.

11. The transfer of the RANAP message Security Mode Complete response, including the selected algorithms, from SRNC to the VLR/SGSN ends the procedure.

The Security mode command to MS starts the downlink integrity protection, i.e. this and all following downlink messages sent to the MS are integrity protected using the new integrity configuration. The Security mode complete from MS starts the uplink integrity protection, i.e. this and all following messages sent from the MS are integrity protected using the new integrity configuration. When ciphering shall be started, the Ciphering Activation time information that is exchanged between SRNC and MS during the Security mode set-up procedure sets the RLC Sequence Number/Connection Frame Number when to start ciphering in Downlink respective Uplink using the new ciphering configuration.

Mechanisms are defined to allow networks to overcome early UE implementation faults [22]. A potential early UE implementation fault could be a faulty UEA1 implementation. To allow networks to handle early UEs which have faulty UEA1 implementations, the SGSN/VLR may configure the security mode command based on the UE"s IMEISV so that certain UEs which claim to support UEA1 shall have security established without ciphering (i.e. with UEA0), while other UEs which claim to support UEA1 shall have security established with ciphering (i.e. with UEA1). This procedure shall involve the SGSN/VLR retrieving the IMEISV from the UE before the security mode set-up procedure has started.

If the above procedure to handle UEs which have faulty UEA1 implementations is implemented and the security mode set-up procedure results in security being established without ciphering (i.e. with UEA0) then the SGSN/VLR shall request the IMEISV from the UE for a second time immediately after the security mode set-up procedure has been completed. This second IMEISV request is integrity protected. If the IMEISV request is not successful, or if the second IMEISV received is different from the IMEISV received before the security mode set-up procedure was started then the connection shall be released.

NWO EX2027
Samsung v Network-1, IPR2026-00114
Page 33 of 73

6.4.6 Signalling procedures in the case of an unsuccessful integrity check

The supervision of failed integrity checks shall be performed both in the MS and the SRNC. In case of failed integrity check (i.e. faulty or missing MAC) is detected after that the integrity protection is started the concerned message shall be discarded. This can happen on the RNC side or on the MS side.

6.4.7 Signalling procedure for periodic local authentication

The following procedure is used by the RNC to periodically perform a local authentication. At the same time, the amount of data sent during the RRC connection is periodically checked by the RNC and the UE. The RNC is monitoring the COUNT-C value associated to each radio bearer. The procedure is triggered whenever any of these values reaches a critical checking value. The granularity of these checking values and the values themselves are defined by the visited network. All messages in the procedure are integrity protected.

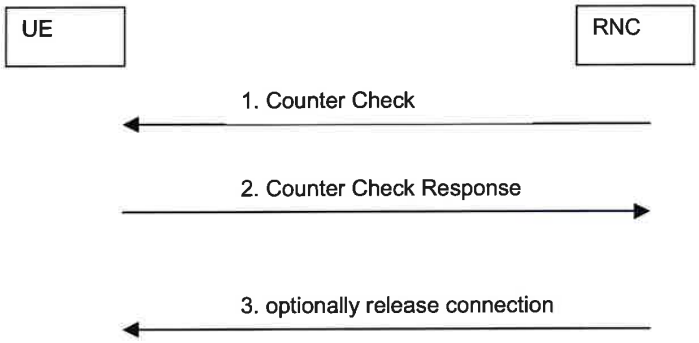

Figure 15a: RNC periodic local authentication procedure

1. When a checking value is reached (e.g. the value in some fixed bit position in the hyperframe number is changed), a Counter Check message is sent by the RNC. The Counter Check message contains the most significant parts of the COUNT-C values (which reflect amount of data sent and received) from each active radio bearer.
2. The UE compares the COUNT-C values received in the Counter Check message with the values of its radio bearers. Different UE COUNT-C values are included within the Counter Check Response message.
3. If the RNC receives a counter check response message that does not contain any COUNT-C values, the procedure ends. If the RNC receives a counter check response that contains one or several COUNT-C values, the RNC may release the connection.

6.4.8 Initialisation of synchronisation for ciphering and integrity protection

The ciphering and integrity protection algorithms are driven by counters (COUNT-C and COUNT-I) that at connection establishment need to be initialised. For that purpose the ME and the USIM have the ability to store a START value. The ME and the USIM store a $START_{CS}$ value for the CS cipher/integrity keys and a $START_{PS}$ value for the PS cipher/integrity keys. The length of START is 20 bits.

The ME only contains (valid) START values when it is powered-on and a USIM is inserted. When the ME is powered-off or the USIM is removed, the ME deletes its START values and the Kc_{128} if one was derived. After power-on or insertion of a USIM, the USIM sends its START values to the ME, and the ME stores them. During idle mode, the START values in the ME and in the USIM are identical and static.

At radio connection establishment for a particular serving network domain (CS or PS) the ME sends the $START_{CS}$ and the $START_{PS}$ value to the RNC in the *RRC connection setup complete* message. The ME marks the START values in the USIM as invalid by setting $START_{CS}$ and $START_{PS}$ to THRESHOLD.

NWO EX2027
Samsung v Network-1, IPR2026-00114
Page 34 of 73

The ME and the RNC initialise the 20 most significant bits of the RRC HFN (for integrity protection), the RLC HFN (for ciphering) and the MAC-d HFN (for ciphering) to the START value of the corresponding service domain; the remaining bits are initialised to 0. Also the RRC SN (for integrity protection) and the RLC SN (for ciphering) are initialised to 0.

During an ongoing radio connection, the $START_{CS}$ value in the ME and in the SRNC is defined as the 20 most significant bits of the maximum of all current COUNT-C and COUNT-I values for all signalling radio bearers and CS user data radio bearers protected using CK_{CS} and/or IK_{CS}, incremented by2, i.e.:

$START_{CS}' = MSB_{20}$ (MAX {COUNT-C, COUNT-I | all radio bearers (including signalling) protected with CK_{CS} and IK_{CS}}) +2.

- If current $START_{CS} < START_{CS}'$ then $START_{CS} = START_{CS}'$, otherwise $START_{CS}$ is unchanged.

Likewise, during an ongoing radio connection, the $START_{PS}$ value in the ME and in the SRNC is defined as the 20 most significant bits of the maximum of all current COUNT-C and COUNT-I values for all signalling radio bearers and PS user data radio bearers protected using CK_{PS} and/or IK_{PS}, incremented by2, i.e.:

$START_{PS}' = MSB_{20}$ (MAX {COUNT-C, COUNT-I | all radio bearers (including signalling) protected with CK_{PS} and IK_{PS}}) +2.

- If current $START_{PS} < START_{PS}'$ then $START_{PS} = START_{PS}'$, otherwise $START_{PS}$ is unchanged.

If any of the COUNT-C or COUNT-I assigned to the radio bearers of the same CN domain reaches its maximum value, the ME and SRNC shall set START of the corresponding CN domain to its maximum value.

Upon radio connection release and when a set of cipher/integrity keys is no longer used, the ME updates $START_{CS}$ and $START_{PS}$ in the USIM with the current values.

During authentication and key agreement the START value associated with the new key set of the corresponding service domain is set to 0 in the USIM and in the ME.

6.4.9 Emergency call handling

PLMNs shall support an emergency call teleservice as defined in TS 22.003 [32] which fulfils the additional service requirements defined in TS 22.101 [33].

The PS domain of a PLMN may support establishment of PS connections for the purposes of IP multimedia subsystem emergency sessions as defined in TS 23.167 [34] which fullfills service requirements defined in TS 22.101. IMS Emergency Session Support in the PS domain is specified in TS 23.060 [9].

6.4.9.1 Security procedures applied

The security mode procedure shall be applied as part of emergency call establishment, or PS connection establishment for an emergency session, as defined in TS 24.008 [35]. Thus, integrity protection (and optionally ciphering) shall be applied as for a non-emergency call or non-emergency related PS connection. If authentication of the (U)SIM fails for any reason, the emergency call or PS connection establishment for emergency session shall proceed as in 6.4.9.2 d) below. Once the call, or PS connection, is in progress with integrity protection (and optionally ciphering) applied, failure of integrity checking or ciphering is an unusual circumstance and must be treated in the same manner as other equipment failures, that is, the call, or emergency related PS connection, will terminate.

6.4.9.2 Security procedures not applied

As a serving network option, emergency calls, or PS connections for emergency sessions, may be established without the network having to apply the security mode procedure as defined in TS 24.008 [35].

The following are the only cases where the "security procedure not applied" option may be used:

a) Authentication is impossible because the (U)SIM is absent;

b) Authentication is impossible because the serving network cannot obtain authentication vectors due to a network failure;

NWO EX2027
Samsung v Network-1, IPR2026-00114
Page 35 of 73

c) Authentication is impossible because the (U)SIM is not permitted to receive non-emergency services from the serving network (e.g. there is no roaming agreement or the IMSI is barred);

d) Authentication is possible but the serving network cannot successfully authenticate the (U)SIM.

6.5 Access link data integrity

6.5.1 General

Most control signalling information elements that are sent between the MS and the network are considered sensitive and must be integrity protected. A message authentication function shall be applied on these signalling information elements transmitted between the ME and the RNC.

After the RRC connection establishment and execution of the security mode set-up procedure, all dedicated MS <–> network control signalling messages (e.g. RRC, MM, CC, GMM, and SM messages) shall be integrity protected. The Mobility Management layer in the MS supervises that the integrity protection is started (see section 6.4.5).

All signalling messages except the following ones shall then be integrity protected:

HANDOVER TO UTRAN COMPLETE

PAGING TYPE 1

PUSCH CAPACITY REQUEST

PHYSICAL SHARED CHANNEL ALLOCATION

RRC CONNECTION REQUEST

RRC CONNECTION SETUP

RRC CONNECTION SETUP COMPLETE

RRC CONNECTION REJECT

RRC CONNECTION RELEASE (CCCH only)

SYSTEM INFORMATION (BROADCAST INFORMATION)

SYSTEM INFORMATION CHANGE INDICATION

TRANSPORT FORMAT COMBINATION CONTROL (TM DCCH only)

6.5.2 Layer of integrity protection

Integrity protection shall be applied at the RRC layer.

6.5.3 Data integrity protection method

Figure 16 illustrates the use of the integrity algorithm f9 to authenticate the data integrity of a signalling message.

NWO EX2027
Samsung v Network-1, IPR2026-00114
Page 36 of 73

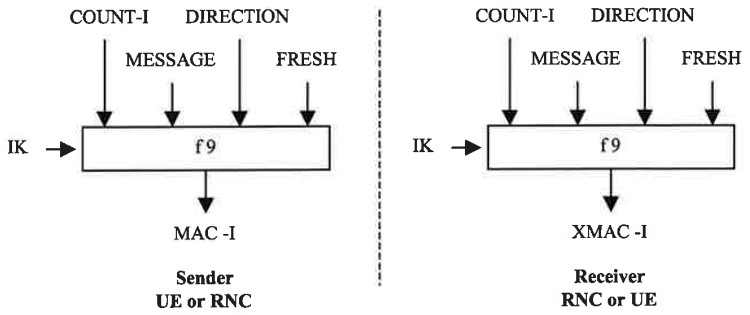

Figure 16: Derivation of MAC-I (or XMAC-I) on a signalling message

The input parameters to the algorithm are the Integrity Key (IK), the integrity sequence number (COUNT-I), a random value generated by the network side (FRESH), the direction bit DIRECTION and the signalling data MESSAGE. Based on these input parameters the user computes message authentication code for data integrity MAC-I using the integrity algorithm f9. The MAC-I is then appended to the message when sent over the radio access link. The receiver computes XMAC-I on the message received in the same way as the sender computed MAC-I on the message sent and verifies the data integrity of the message by comparing it to the received MAC-I.

6.5.4 Input parameters to the integrity algorithm

6.5.4.1 COUNT-I

The integrity sequence number COUNT-I is 32 bits long.

For signalling radio bearers (RB 0-4) there is one COUNT-I value per up-link signalling radio bearer and one COUNT-I value per down-link signalling radio bearer.

COUNT-I is composed of two parts: a "short" sequence number and a "long" sequence number. The "short" sequence number forms the least significant bits of COUNT-I while the "long" sequence number forms the most significant bits of COUNT-I. The "short" sequence number is the 4-bit RRC sequence number (RRC SN) that is available in each RRC PDU. The "long" sequence number is the 28-bit RRC hyper frame number (RRC HFN) which is incremented at each RRC SN cycle.

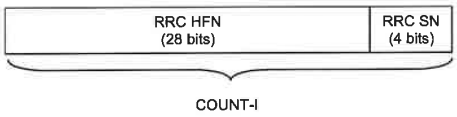

Figure 16a: The structure of COUNT-I

The RRC HFN is initialised by means of the parameter START, which is described in section 6.4.8. The ME and the RNC then initialise the 20 most significant bits of the RRC HFN to START; the remaining bits of the RRC HFN are initialised to 0.

6.5.4.2 IK

The integrity key IK is 128 bits long.

There may be one IK for CS connections (IK_{CS}), established between the CS service domain and the user and one IK for PS connections (IK_{PS}) established between the PS service domain and the user. Which integrity key to use for a particular connection is described in 6.5.5.

For UMTS subscribers IK is established during UMTS AKA as the output of the integrity key derivation function f4, that is available in the USIM and in the HLR/AuC. For GSM subscribers, that access the UTRAN, IK is established following GSM AKA and is derived from the GSM cipher key Kc, as described in 6.8.2.

NWO EX2027
Samsung v Network-1, IPR2026-00114
Page 37 of 73

IK is stored in the USIM and a copy is stored in the ME. IK is sent from the USIM to the ME upon request of the ME. The USIM shall send IK under the condition that a valid IK is available. The ME shall trigger a new authentication procedure if the current value of $START_{CS}$ or $START_{PS}$ in the USIM are not up-to-date or $START_{CS}$ or $START_{PS}$ have reached THRESHOLD. The ME shall delete IK from memory after power-off as well as after removal of the USIM.

IK is sent from the HLR/AuC to the VLR/SGSN and stored in the VLR/SGSNas part of a quintet. It is sent from the VLR/SGSN to the RNC in the (RANAP) *security mode command.*

At handover, the IK is transmitted within the network infrastructure from the old RNC to the new RNC, to enable the communication to proceed, and the synchronisation procedure is resumed. The IK remains unchanged at handover.

6.5.4.3 FRESH

The network-side nonce FRESH is 32 bits long.

There is one FRESH parameter value per user. The input parameter FRESH protects the network against replay of signalling messages by the user. At connection set-up the RNC generates a random value FRESH and sends it to the user in the (RRC) *security mode command.* The value FRESH is subsequently used by both the network and the user throughout the duration of a single connection. This mechanism assures the network that the user is not replaying any old MAC-Is.

At handover with relocation of the S-RNC, the new S-RNC generates its own value for the FRESH parameter and sends it to the ME in the RRC message that indicates a new UTRAN Radio Network Temporary Identity due to a SRNC relocation (see TS 25.331 [17]).

6.5.4.4 DIRECTION

The direction identifier DIRECTION is 1 bit long.

The direction identifier is input to avoid that the integrity algorithm used to compute the message authentication codes would use an identical set of input parameter values for the up-link and for the down-link messages. The value of the DIRECTION is 0 for messages from UE to RNC and 1 for messages from RNC to UE.

6.5.4.5 MESSAGE

The signalling message itself with the radio bearer identity. The latter is appended in front of the message. Note that the radio bearer identity is not transmitted with the message but it is needed to avoid that for different instances of message authentication codes the same set of input parameters is used.

6.5.5 Integrity key selection

There may be one IK for CS connections (IK_{CS}), established between the CS service domain and the user and one IK for PS connections (IK_{PS}) established between the PS service domain and the user.

The data integrity of radio bearers for user data is not protected.

The signalling radio bearers are used for transfer of signalling data for services delivered by both CS and PS service domains. These signalling radio bearers are data integrity protected by the IK of the service domain for which the most recent security mode negotiation took place. This may require that the integrity key of an (already integrity protected) ongoing signalling connection has to be changed, when a new connection is established with another service domain, or when a security mode negotiation follow a re-authentication during an ongoing connection. This change should be completed by the RNC within five seconds after receiving the security mode command from the VLR/SGSN.

NOTE: For the behaviour of the terminal regarding key changes see section 6.4.5.

6.5.6 UIA identification

Each UMTS Integrity Algorithm (UIA) will be assigned a 4-bit identifier. Currently, the following values have been defined:

"0001_2" : UIA1, Kasumi.

NWO EX2027
Samsung v Network-1, IPR2026-00114
Page 38 of 73

"0010_2" : UIA2, SNOW 3G.

The remaining values are not defined.

UEs and RNCs shall implement UIA1 and UIA2.

The use of Kasumi for the integrity protection function f9 is specified in TS 35.201 [11] and TS 35.202 [12]. Implementers' test data and design conformance data is provided in TS 35.203 [13] and TS 35.204 [14].

The use of SNOW 3G for the integrity protection function f9 is specified in TS 35.215 [24] and TS 35.216 [25]. Implementers' test data and design conformance data is provided in TS 35.217 [26] and TS 35.218 [27].

6.6 Access link data confidentiality

6.6.1 General

User data and some signalling information elements are considered sensitive and should be confidentiality protected. To ensure identity confidentiality (see section 6.1), the temporary user identity (P-)TMSI should be transferred in a protected mode at allocation time and at other times when the signalling procedures permit it.

These needs for a protected mode of transmission are fulfilled by a confidentiality function which is applied on dedicated channels between the ME and the RNC.

6.6.2 Layer of ciphering

The ciphering function is performed either in the RLC sub-layer or in the MAC sub-layer, according to the following rules:

- If a radio bearer is using a non-transparent RLC mode (AM or UM), ciphering is performed in the RLC sub-layer.
- If a radio bearer is using the transparent RLC mode, ciphering is performed in the MAC sub-layer (MAC-d entity).

Ciphering when applied is performed in the S-RNC and the ME and the context needed for ciphering (CK, HFN, etc.) is only known in S-RNC and the ME.

6.6.3 Ciphering method

Figure 16b illustrates the use of the ciphering algorithm f8 to encrypt plaintext by applying a keystream using a bit per bit binary addition of the plaintext and the keystream. The plaintext may be recovered by generating the same keystream using the same input parameters and applying a bit per bit binary addition with the ciphertext.

NWO EX2027
Samsung v Network-1, IPR2026-00114
Page 39 of 73

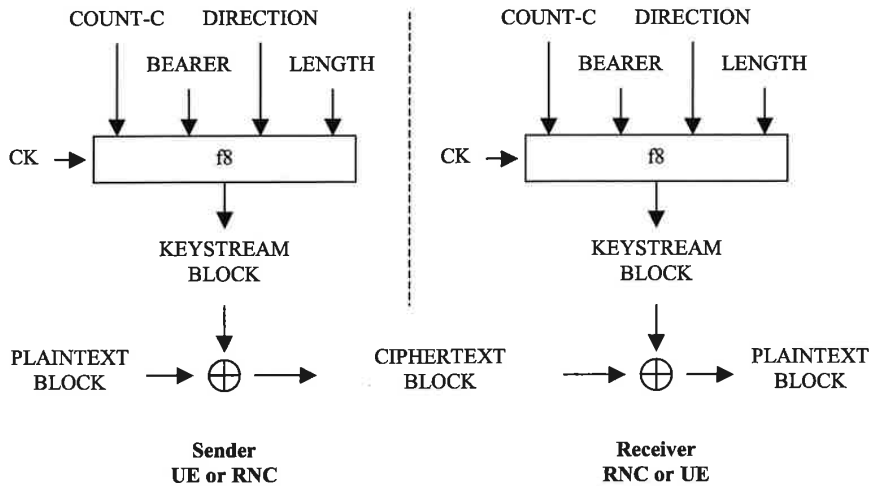

Figure 16b: Ciphering of user and signalling data transmitted over the radio access link

The input parameters to the algorithm are the cipher key CK, a time dependent input COUNT-C, the bearer identity BEARER, the direction of transmission DIRECTION and the length of the keystream required LENGTH. Based on these input parameters the algorithm generates the output keystream block KEYSTREAM which is used to encrypt the input plaintext block PLAINTEXT to produce the output ciphertext block CIPHERTEXT.

The input parameter LENGTH shall affect only the length of the KEYSTREAM BLOCK, not the actual bits in it.

6.6.4 Input parameters to the cipher algorithm

6.6.4.1 COUNT-C

The ciphering sequence number COUNT-C is 32 bits long.

There is one COUNT-C value per up-link radio bearer and one COUNT-C value per down-link radio bearer using RLC AM or RLC UM. For all transparent mode RLC radio bearers of the same CN domain COUNT-C is the same, and COUNT-C is also the same for uplink and downlink.

COUNT-C is composed of two parts: a "short" sequence number and a "long" sequence number. The "short" sequence number forms the least significant bits of COUNT-C while the "long" sequence number forms the most significant bits of COUNT-C. The update of COUNT-C depends on the transmission mode as described below (see figure 16c).

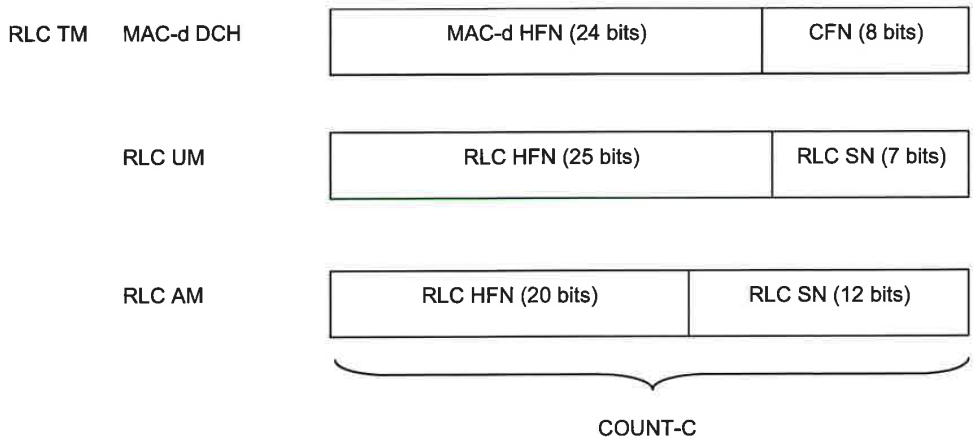

Figure 16c: The structure of COUNT-C for all transmission modes

- For RLC TM on DCH, the "short" sequence number is the 8-bit connection frame number CFN of COUNT-C. It is independently maintained in the ME MAC-d entity and the SRNC MAC-d entity. The "long" sequence number is the 24-bit MAC-d HFN, which is incremented at each CFN cycle.
- For RLC UM mode, the "short" sequence number is the 7-bit RLC sequence number (RLC SN) and this is part of the RLC UM PDU header. The "long" sequence number is the 25-bit RLC UM HFN which is incremented at each RLC SN cycle.
- For RLC AM mode, the "short" sequence number is the 12-bit RLC sequence number (RLC SN) and this is part of the RLC AM PDU header. The "long" sequence number is the 20-bit RLC AM HFN which is incremented at each RLC SN cycle.

The hyperframe number HFN is initialised by means of the parameter START, which is described in section 6.4.8. The ME and the RNC then initialise the 20 most significant bits of the RLC AM HFN, RLC UM HFN and MAC-d HFN to START. The remaining bits of the RLC AM HFN, RLC UM HFN and MAC-d HFN are initialised to zero.

When a new radio bearer is created during a RRC connection in ciphered mode, the HFN is initialised by the current START value (see section 6.4.8).

6.6.4.2 CK

The cipher key CK is 128 bits long.

There may be one CK for CS connections (CK_{CS}), established between the CS service domain and the user and one CK for PS connections (CK_{PS}) established between the PS service domain and the user. The CK to use for a particular radio bearer is described in 6.6.5. For UMTS subscribers, CK is established during UMTS AKA, as the output of the cipher key derivation function f3, available in the USIM and in HLR/AuC. For GSM subscribers that access the UTRAN, CK is established following GSM AKA and is derived from the GSM cipher key Kc, as described in 8.2.

CK is stored in the USIM and a copy is stored in the ME. CK is sent from the USIM to the ME upon request of the ME. The USIM shall send CK under the condition that a valid CK is available. The ME shall trigger a new authentication procedure if the current value of $START_{CS}$ or $START_{PS}$ in the USIM have reached THRESHOLD. The ME shall delete CK from memory after power-off as well as after removal of the USIM.

CK is sent from the HLR/AuC to the VLR/SGSN and stored in the VLR/SGSN as part of the quintet. It is sent from the VLR/SGSN to the RNC in the (RANAP) security mode command.

NWO EX2027
Samsung v Network-1, IPR2026-00114
Page 41 of 73

At handover, the CK is transmitted within the network infrastructure from the old RNC to the new RNC, to enable the communication to proceed. The cipher CK remains unchanged at handover.

6.6.4.3 BEARER

The radio bearer identifier BEARER is 5 bits long.

There is one BEARER parameter per radio bearer associated with the same user and multiplexed on a single 10ms physical layer frame. The radio bearer identifier is input to avoid that for different keystream an identical set of input parameter values is used.

6.6.4.4 DIRECTION

The direction identifier DIRECTION is 1 bit long.

The direction identifier is input to avoid that for the keystreams for the up-link and for the down-link would use the an identical set of input parameter values. The value of the DIRECTION is 0 for messages from UE to RNC and 1 for messages from RNC to UE.

6.6.4.5 LENGTH

The length indicator LENGTH is 16 bits long.

The length indicator determines the length of the required keystream block. LENGTH shall affect only the length of the KEYSTREAM BLOCK, not the actual bits in it.

6.6.5 Cipher key selection

There is one CK for CS connections (CK_{CS}), established between the CS service domain and the user and one CK for PS connections (CK_{PS}) established between the PS service domain and the user.

The radio bearers for CS user data are ciphered with CK_{CS}.

The radio bearers for PS user data are ciphered with CK_{PS}.

The signalling radio bearers are used for transfer of signalling data for services delivered by both CS and PS service domains. These signalling radio bearers are ciphered by the CK of the service domain for which the most recent security mode negotiation took place. This may require that the cipher key of an (already ciphered) ongoing signalling connection has to be changed, when a new connection is established with another service domain, or when a security mode negotiation follows a re-authentication during an ongoing connection. This change should be completed by the RNC within five seconds after receiving the security mode command from the VLR/SGSN.

NOTE: For the behaviour of the terminal regarding key changes see section 6.4.5.

6.6.6 UEA identification

Each UEA will be assigned a 4-bit identifier. Currently the following values have been defined:

"0000_2" : UEA0, no encryption.

"0001_2" : UEA1, Kasumi.

"0010_2" : UEA2, SNOW 3G.

The remaining values are not defined.

UEs shall implement UEA0, UEA1 and UEA2.

The use of Kasumi for the ciphering function f8 is specified in TS 35.201 [11] and TS 35.202 [12]. Implementers' test data and design conformance data is provided in TS 35.203 [13] and TS 35.204 [14].

The use of SNOW 3G for the ciphering function f8 is specified in TS 35.215 [24] and TS 35.216 [25]. Implementers' test data and design conformance data is provided in TS 35.217 [26] and TS 35.218 [27].

NWO EX2027
Samsung v Network-1, IPR2026-00114
Page 42 of 73

6.7 Void

6.8 Interoperation and handover between UMTS and GSM

6.8.1 Authentication and key agreement of UMTS subscribers

6.8.1.1 General

For UMTS subscribers, authentication and key agreement will be performed as follows:

- UMTS AKA shall be applied when the user is attached to a UTRAN.
- UMTS AKA shall be applied when the user is attached to a GSM BSS, in case the user has a ME capable of UMTS AKA and also the VLR/SGSN is R99+. In this case, the 64-bit GSM cipher key Kc is derived from the UMTS cipher/integrity keys CK and IK, by the VLR/SGSN on the network side and by the USIM on the user side.The 128-bit GSM cipher key Kc_{128} is derived from the UMTS cipher/integrity keys CK and IK, by the VLR/SGSN on the network side and by the ME on the user side if needed to support 128-bit ciphering algorithms in GSM as described in subclause 6.3.3 of this specification.
- GSM AKA shall be applied when the user is attached to a GSM BSS, in case the user has a ME not capable of UMTS AKA. In this case, the GSM user response SRES and the 64-bit GSM cipher key Kc are derived from the UMTS user response RES and the UMTS cipher/integrity keys CK and IK. A R98- VLR/SGSN uses the stored Kc and RES and a R99+ VLR/SGSN derives the SRES from RES and Kc from CK, IK.

NOTE: To operate within a ME not capable of UMTS AKA, the USIM may support the SIM-ME interface as defined in GSM 11.11, and support GSM AKA which provides the corresponding GSM functionality for calculating SRES and Kc based on the authentication key K and the 3G authentication algorithm implemented in the USIM. Due to the fact that the UMTS authentication algorithm only computes CK/IK and RES, conversion of CK/IK to Kc shall be achieved by using the conversion function c3, and conversion of RES to SRES by c2.

- GSM AKA shall be applied when the user is attached to a GSM BSS, in case the VLR/SGSN is R98-. In this case, the USIM derives the GSM user response SRES and the GSM cipher key Kc from the UMTS user response RES and the UMTS cipher/integrity keys CK, IK.

The execution of the UMTS (resp. GSM) AKA results in the establishment of a UMTS (resp. GSM) security context between the user and the serving network domain to which the VLR/SGSN belongs. The user needs to separately establish a security context with each serving network domain.

Figure 18 shows the different scenarios that can occur with UMTS subscribers in a mixed network architecture.

NWO EX2027
Samsung v Network-1, IPR2026-00114
Page 43 of 73

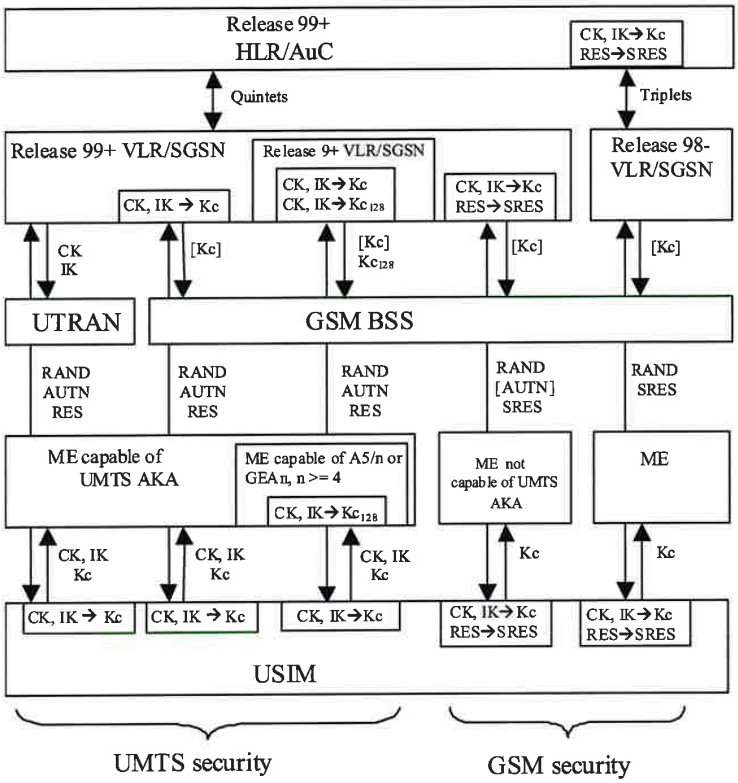

Figure 18: Authentication and key agreement of UMTS subscribers

Note that the UMTS parameters RAND, AUTN and RES are sent transparently through the UTRAN or GSM BSS and that the GSM parameters RAND and SRES are sent transparently through the GSM BSS.

In case of a GSM BSS, ciphering is applied in the GSM BSS for services delivered via the MSC/VLR, and by the SGSN for services delivered via the SGSN. In the latter case the GSM cipher keys Kc or Kc_{128} are not sent to the GSM BSS.

In case of a UTRAN, ciphering and integrity are always applied in the RNC, and the UMTS cipher/integrity keys CK an IK are always sent to the RNC.

6.8.1.2 R99+ HLR/AuC

Upon receipt of an *authentication data request* from a R99+ VLR/SGSN for a UMTS subscriber, a R99+ HLR/AuC shall send quintets, generated as specified in 6.3.

Upon receipt of an *authentication data request* from a R98- VLR/SGSN for a UMTS subscriber, a R99+ HLR/AuC shall send triplets, derived from quintets using the following conversion functions:

a) c1: $RAND_{[GSM]} = RAND$

b) c2: $SRES_{[GSM]} = XRES^*_1 \text{ xor } XRES^*_2 \text{ xor } XRES^*_3 \text{ xor } XRES^*_4$

c) c3: $Kc_{[GSM]} = CK_1 \text{ xor } CK_2 \text{ xor } IK_1 \text{ xor } IK_2$

whereby XRES* is 16 octets long and XRES* = XRES if XRES is 16 octets long and XRES* = XRES || 0...0 if XRES is shorter than 16 octets, $XRES^*_i$ are all 4 octets long and $XRES^* = XRES^*_1 \| XRES^*_2 \| XRES^*_3 \| XRES^*_4$, CK_i and IK_i are both 64 bits long and $CK = CK_1 \| CK_2$ and $IK = IK_1 \| IK_2$

NWO EX2027
Samsung v Network-1, IPR2026-00114
Page 44 of 73

6.8.1.3 R99+ VLR/SGSN

The AKA procedure will depend on the terminal capabilities, as follows:

UMTS subscriber with R99+ ME

When the user has R99+ ME, the VLR/SGSN shall send the ME a UMTS authentication challenge (i.e. RAND and AUTN) using a quintet that is either:

a) retrieved from the local database,

b) provided by the HLR/AuC, or

c) provided by the previously visited R99+ VLR/SGSN.

Note: Originally all quintets are provided by the HLR/AuC.

When the ME is capable of the USIM-ME interface, then UMTS AKA is performed and the VLR/SGSN receives the UMTS response RES.

UMTS AKA results in the establishment of a UMTS security context; the UMTS cipher/integrity keys CK and IK and the key set identifier KSI are stored in theVLR/SGSN.

When the user is attached to a UTRAN, the UMTS cipher/integrity keys are sent to the RNC, where the cipher/integrity algorithms are allocated.

When the user is attached to a GSM BSS, UMTS AKA is followed by the derivation of the GSM cipher keys Kc (and Kc_{128} when needed)from the UMTS cipher/integrity keys. When the user receives service from an MSC/VLR, the derived cipher keys Kc (and Kc_{128} when needed) are then sent to the BSC (and forwarded to the BTS). When the user receives service from an SGSN, the derived cipher key Kc or Kc_{128} applied in the SGSN itself.

UMTS authentication and key freshness is always provided to UMTS subscribers with R99+ ME independently of the radio access network.

When the ME is not capable of the USIM-ME interface, then GSM AKA is performed and the VLR/SGSN receives the GSM response SRES.

GSM AKA results in the establishment of a GSM security context; the 64-bit GSM cipher key Kc and the cipher key sequence number CKSN are stored in the VLR/SGSN.

The R99+ VLR/SGSN shall reject authentication if SRES is received in response of a UMTS challenge (RAND, AUTN) over an Iu-Interface.

The R99+ VLR/SGSN shall accept authentication if a valid SRES is received in response of a UMTS challenge (RAND, AUTN) over A or Gb-Interface. This will happen in case a UICC is inserted in a ME that is not capable of UMTS AKA and is attached to a GSM BSS. In this case the R99+ VLR/SGSN uses function c2 to convert RES (from the quintet) to SRES to verify the received SRES.

UMTS subscriber with R98- ME

When the user has R98- ME, the R99+ VLR/SGSN sends the ME a GSM authentication challenge using a triplet that is either:

a) derived by means of the conversion functions c2 and c3 in the R99+ VLR/SGSN from a quintet that is:

   i) retrieved from the local database,

   ii) provided by the HLR/AuC, or

   iii) provided by the previously visited R99+ VLR/SGSN, or

b) provided as a triplet by the previously visited VLR/SGSN.

NOTE 1: R99+ VLR/SGSN will always provide quintets for UMTS subscribers.

NOTE 2: For a UMTS subscriber, all triplets are derived from quintets, be it in the HLR/AuC or in an VLR/SGSN.

NWO EX2027
Samsung v Network-1, IPR2026-00114
Page 45 of 73

GSM AKA results in the establishment of a GSM security context; the 64-bit GSM cipher key Kc and the cipher key sequence number CKSN are stored in the VLR/SGSN.

In this case the user is attached to a GSM BSS. When the user receives service from an MSC/VLR, the 64-bit GSM cipher key is sent to the BSC (and forwarded to the BTS). When the user receives service from an SGSN, the derived cipher key Kc is applied in the SGSN itself.

UMTS authentication and key freshness cannot be provided to UMTS subscriber with R98- ME.

6.8.1.4 R99+ ME

Release 99+ ME that has UTRAN radio capability shall support the USIM-ME interface as specified in TS 31.102 [20].

Rel4- ME that has no UTRAN radio capabilities may support the USIM-ME interface as specified in TS 31.102 [20].

Rel5+ ME that has no UTRAN radio capabilities shall support the USIM-ME interface as specified in TS 31.102 [20].

A ME capable of UMTS AKA with a USIM active and attached to a UTRAN shall only participate in UMTS AKA and shall not participate in GSM AKA.

A ME capable of UMTS AKA with a USIM active and attached to a GSM BSS shall participate in UMTS AKA and may participate in GSM AKA. Participation in GSM AKA is required to allow registration in a R98- VLR/SGSN.

A ME that not capable of UMTS AKA with a USIM active can only participate in GSM AKA.

The execution of UMTS AKA results in the establishment of a UMTS security context; the UMTS cipher/integrity keys CK and IK and the key set identifier KSI are passed to the ME. If the USIM supports conversion function c3 and/or GSM AKA, the ME shall also receive a 64-bit GSM cipher key Kc derived at the USIM.

If the ME supports 128-bit ciphering algorithms A5 and/or GEA for GSM, the ME shall also support the key derivation function for Kc_{128} as specified in annex B.5.The execution of GSM AKA results in the establishment of a GSM security context; the 64-bit GSM cipher key Kc and the cipher key sequence number CKSN are stored in the ME.

6.8.1.5 USIM

The USIM shall support UMTS AKA and may support backwards compatibility with the GSM system, which consists of:

Feature 1: 64-bit GSM cipher key derivation (conversion function c3) to access GSM BSS attached to a R99+ VLR/SGSN using a dual-mode R99+ ME;

Feature 2: GSM AKA to access the GSM BSS attached to a R98- VLR/SGSN or when using ME not capable of UMTS AKA;

Feature 3: SIM-ME interface (GSM 11.11) to operate within ME not capable of UMTS AKA.

When the ME provides the USIM with RAND and AUTN, UMTS AKA shall be executed. If the verification of AUTN is successful, the USIM shall respond to the ME with the UMTS user response RES and the UMTS cipher/integrity keys CK and IK. The ME shall store CK and IK as current security context data on the USIM. If the USIM supports access to 64-bit GSM cipher key derivation (feature 1), the USIM shall also derive the 64-bit GSM cipher key Kc from the UMTS cipher/integrity keys CK and IK using conversion function c3 and send the derived Kc to the ME. In case the verification of AUTN is not successful, the USIM shall respond with an appropriate error indication to the ME.

When the ME provides the USIM with only RAND, and the USIM supports GSM AKA (Feature 2), GSM AKA shall be executed. The USIM first computes the UMTS user response RES and the UMTS cipher/integrity keys CK and IK. The USIM then derives the GSM user response SRES and the 64-bit GSM cipher key Kc using the conversion functions c2 and c3 and send the GSM user response SRES and the 64-bit GSM cipher key Kc to the ME. The ME shall store the 64-bit GSM cipher key Kc as the current security context on the USIM.

In case the USIM does not support 64-bit GSM cipher key derivation (Feature 1) or GSM AKA (Feature 2), the ME shall be informed. An ME with a USIM that does not support GSM cipher key derivation (Feature 1) shall not perform the GSM cipher key derivation (conversion function c3) in the ME and therefore cannot operate in any GSM BSS with 64-bit key ciphering enabled. An ME with a USIM that does not support GSM AKA (Feature 2) cannot operate under a

NWO EX2027
Samsung v Network-1, IPR2026-00114
Page 46 of 73

R98- VLR/SGSN. A USIM that does not support GSM AKA (Feature 2) cannot work within a ME that is not capable of UMTS AKA.

6.8.2 Authentication and key agreement for GSM subscribers

6.8.2.1 General

For GSM subscribers, GSM AKA shall always be used.

The execution of the GSM AKA results in the establishment of a GSM security context between the user and the serving network domain to which the VLR/SGSN belongs. The user needs to separately establish a security context with each serving network domain.

When in a UTRAN, the UMTS cipher/integrity keys CK and IK are derived from the GSM cipher key Kc by the ME and the VLR/SGSN, both R99+ entities.

Figure 19 shows the different scenarios that can occur with GSM subscribers using either R98- or R99+ ME in a mixed network architecture.

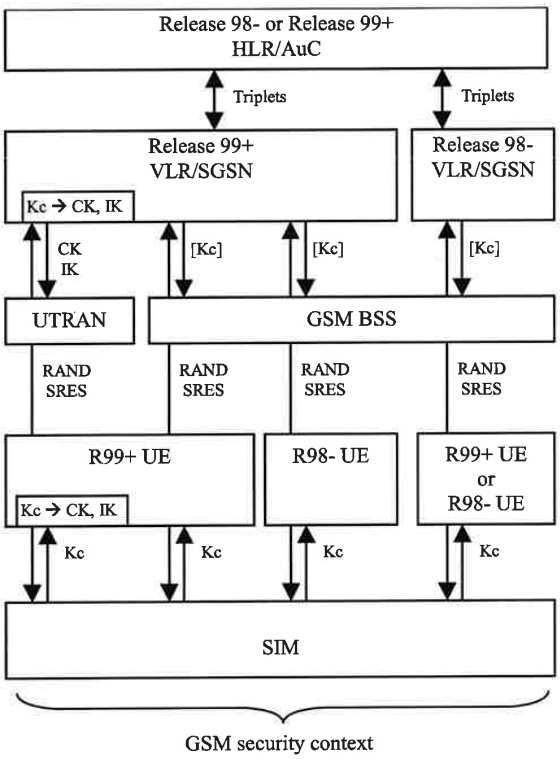

Figure 19: Authentication and key agreement for GSM subscribers

Note that the GSM parameters RAND and RES are sent transparently through the UTRAN or GSM BSS.

In case of a GSM BSS, ciphering is applied in the GSM BSS for services delivered via the MSC/VLR, and by the SGSN for services delivered via the SGSN. In the latter case the GSM cipher key Kc is not sent to the GSM BSS.

In case of a UTRAN, ciphering is always applied in the RNC, and the UMTS cipher/integrity keys CK an IK are always sent to the RNC.

NWO EX2027
Samsung v Network-1, IPR2026-00114
Page 47 of 73

6.8.2.2 R99+ HLR/AuC

Upon receipt of an *authentication data request* for a GSM subscriber, a R99+ HLR/AuC shall send triplets generated as specified in GSM 03.20.

6.8.2.3 VLR/SGSN

The R99+ VLR/SGSN shall perform GSM AKA using a triplet that is either:

a) retrieved from the local database,

b) provided by the HLR/AuC, or

c) provided by the previously visited VLR/SGSN.

NOTE: All triplets are originally provided by the HLR/AuC.

GSM AKA results in the establishment of a GSM security context; the GSM cipher key Kc and the cipher key sequence number CKSN are stored in the VLR/SGSN.

When the user is attached to a UTRAN, the R99+ VLR/SGSN derives the UMTS cipher/integrity keys from the GSM cipher key using the following conversion functions:

a) c4: $CK_{[UMTS]} = Kc \parallel Kc$;

b) c5: $IK_{[UMTS]} = Kc_1 \text{ xor } Kc_2 \parallel Kc \parallel Kc_1 \text{ xor } Kc_2$;

whereby in c5, Kc_i are both 32 bits long and $Kc = Kc_1 \parallel Kc_2$.

The UMTS cipher/integrity keys are then sent to the RNC where the ciphering and integrity algorithms are allocated.

When the user is attached to a GSM BSS and the user receives service from an MSC/VLR, the cipher key Kc is sent to the BSC (and forwarded to the BTS). When the user receives service from an SGSN, the cipher key Kc is applied in the SGSN itself.

6.8.2.4 R99+ ME

R99+ ME with a SIM inserted, shall participate only in GSM AKA.

GSM AKA results in the establishment of a GSM security context; the GSM cipher key Kc and the cipher key sequence number CKSN are stored in the ME.

When the user is attached to a UTRAN, R99+ ME shall derive the UMTS cipher/integrity keys CK and IK from the GSM cipher key Kc using the conversion functions c4 and c5. The ME shall handle the $START_{CS}$ and $START_{PS}$ as described in section 6.4.8 with the exception that the START values shall be stored in non-volatile memory on the ME rather than on the GSM SIM. If a different SIM is inserted then the ME shall delete the GSM cipher keys for the PS and CS domain (Kc), the derived UMTS cipher/integrity keys (CK and IK) for the PS and CS domain, and reset the START values to zero. The ME shall then trigger a new authentication and key agreement at the next connection establishment by indicating to the network that no valid keys are available for use using the procedure described in section 6.4.4.

When the user is attached to a UTRAN, a R99+ ME with a SIM inserted shall use a default value of all ones for maximum value of $START_{CS}$ or $START_{PS}$. The ME shall handle the maximum value of $START_{CS}$ or $START_{PS}$ as described in section 6.4.3 with the exception that the maximum value of $START_{CS}$ or $START_{PS}$ is stored on the ME rather than on the GSM SIM.

6.8.3 Distribution and use of authentication data between VLRs/SGSNs

The distribution of authentication data (unused authentication vectors and/or current security context data) between R99+ VLRs/SGSNs of the same service network domain is performed according to chapter 6.3.4. The following four cases are distinguished related to the distribution of authentication data between VLRs/SGSNs (of the same or different releases). Conditions for the distribution of such data and for its use when received at VLRn/SGSNn are indicated for each case:

a) R99+ VLR/SGSN to R99+ VLR/SGSN

NWO EX2027
Samsung v Network-1, IPR2026-00114
Page 48 of 73

UMTS and GSM authentication vectors can be distributed between R99+ VLRs/SGSNs. Note that originally all authentication vectors (quintets for UMTS subscribers and triplets for GSM subscribers) are provided by the HLR/AuC.

Current security context data can be distributed between R99+ VLRs/SGSNs. VLRn/SGSNn shall not use current security context data received from VLRo/SGSNo to authenticate the subscriber using local authentication in the following cases:

i) Security context to be established at VLRn/SGSNn requires a different set of keys than the one currently in use at VLRo/SGSNo. This change of security context is caused by a change of ME release (R"99 ME ←→ R"98 ME) when the user registers at VLRn/SGSNn.

ii) Authentication data from VLRo includes 64-bit Kc+CKSN but no unused AVs and the subscriber has a R"99 ME (under GSM BSS or UTRAN). In this situation, VLRn have no indication of whether the subscriber is GSM or UMTS and it is not able to decide whether the 64-bit Kc received can be used (in case the subscriber were a GSM subscriber).

In these two cases, received current security context data shall be discarded and a new AKA procedure shall be performed.

b) R98- VLR/SGSN to R98- VLR/SGSN

Only triplets can be distributed between R98- VLRs/SGSNs. Note that originally for GSM subscribers, triplets are generated by HLR/AuC and for UMTS subscribers, they are derived from UMTS authentication vectors by R99+ HLR/AuC. UMTS AKA is not supported and only GSM security context can be established by a R98- VLR/SGSN.

R98- VLRs are not prepared to distribute current security context data.

Since only GSM security context can be established under R98- SGSNs, security context data can be distributed and used between R98- SGSNs.

c) R99+ VLR/SGSN to R98- VLR/SGSN

R99+ VLR/SGSN can distribute to a new R98- VLR/SGSN triplets originally provided by HLR/AuC for GSM subscribers or can derive triplets from stored quintets originally provided by R99+ HLR/AuC for UMTS subscribers. Note that R98- VLR/SGSN can only establish GSM security context.

R99+ VLRs shall not distribute current security context data to R98- VLRs.

Since R98- SGSNs are only prepared to handle GSM security context data, R99+ SGSNs shall only distribute GSM security context data (64-bit Kc, CKSN) to R98- SGSNs.

d) R98- VLR/SGSN to R99+ VLR/SGSN.

In order to not establish a GSM security context for a UMTS subscriber, triplets provided by a R98- VLR/SGSN can only be used by a R99+ VLR/SGSN to establish a GSM security context under GSM-BSS with a R98- ME.

In all other cases, R99+ VLR/SGSN shall request fresh AVs (either triplets or quintets) to HE. In the event, the R99+ VLR/SGSN receives quintets, it shall discard the triplets provided by the R98- VLR/SGSN.

R98- VLRs are not prepared to distribute current security context data.

R98- SGSNs can distribute GSM security context data only. The use of this information at R99+ SGSNn shall be performed according to the conditions stated in a).

6.8.4 Intersystem handover for CS Services – from UTRAN to GSM BSS

If ciphering has been started when an intersystem handover occurs from UTRAN to GSM BSS, the necessary information (e.g. Kc, supported/allowed GSM ciphering algorithms) is transmitted within the system infrastructure before the actual handover is executed to enable the communication to proceed from the old RNC to the new GSM BSS, and to continue the communication in ciphered mode. The RNC may request the MS to send the MS Classmarks 2 and 3 which include information on the GSM ciphering algorithm capabilities of the MS. This is necessary only if the MS Classmarks 2 and 3 were not transmitted from UE to UTRAN during the RRC Connection Establishment. The

NWO EX2027
Samsung v Network-1, IPR2026-00114
Page 49 of 73

intersystem handover will imply a change of ciphering algorithm from a UEA to a GSM A5. The GSM BSS includes the selected GSM ciphering mode in the handover command message sent to the MS via the RNC.

The integrity protection of signalling messages is stopped at handover to GSM BSS.

The START values (see section 6.4.8) shall be stored in the ME/USIM at handover to GSM BSS.

6.8.4.1 UMTS security context

A UMTS security context in UTRAN is only established for a UMTS subscriber with a ME that is capable of UMTS AKA. At the network side, four cases are distinguished:

a) In case of a handover to a GSM BSS controlled by the same MSC/VLR, the MSC/VLR derives the 64-bit GSM cipher key Kc from the UMTS cipher/integrity keys CK and IK used before the intersystem handover (using the conversion function c3) and sends the 64-bit Kc to the target BSC (which forwards it to the BTS). If the MSC/VLR is Rel-9+ and MSC/VLR has included a 128-bit GSM ciphering algorithms as a permitted ciphering algorithm, the MSC/VLR shall also derive the 128-bit ciphering key Kc_{128} and send also this to the target BSC (which forwards it to the BTS).

b) In case of a handover to a GSM BSS controlled by other R98- MSC/VLR, the initial MSC/VLR derives the GSM cipher key from the UMTS cipher/integrity keys used before the intersystem handover (using the conversion function c3) and sends it to the target BSC via the new MSC/VLR controlling the BSC. The initial MSC/VLR remains the anchor point throughout the service.

c) In case of a handover to a GSM BSS controlled by another R99+ MSC/VLR, the initial MSC/VLR sends the UMTS cipher/integrity keys CK and IK used before the intersystem handover to the new MSC/VLR. The initial MSC/VLR also derives the 64-bit Kc and sends it to the new MSC/VLR. The new MSC/VLR stores the keys and sends the received 64-bit GSM cipher key Kc to the target BSC (which forwards it to the BTS). The initial MSC/VLR remains the anchor point throughout the service.

d) In case of a handover to a GSM BSS controlled by another Rel-9+ MSC/VLR, the initial MSC/VLR sends the UMTS cipher/integrity keys CK and IK used before the intersystem handover to the new MSC/VLR. The initial MSC/VLR also derives the 64-bit Kc and sends it to the new MSC/VLR. The new MSC/VLR stores the keys and sends the received 64-bit GSM cipher key Kc to the target BSC (which forwards it to the BTS). In case the MSC/VLR has included a 128-bit GSM ciphering algorithm as a permitted ciphering algorithm, the new MSC/VLR shall compute also the Kc_{128} from the CK/IK and forward also the Kc_{128} to the BSS together with the 64-bit Kc. The initial MSC/VLR remains the anchor point throughout the service.

At the user side, in either case, the ME applies the derived 64-bit GSM cipher key Kc from the key set which was used before the intersystem handover if the selected GSM ciphering algorithm requires a 64-bit key. If the selected GSM A5 ciphering algorithm requires a 128-bit key, the ME shall apply the derived 128-bit GSM cipher key Kc_{128} from the key set which was used before the intersystem handover.

6.8.4.2 GSM security context

A GSM security context in UTRAN is only established for a GSM subscribers with a R99+ ME. At the network side, two cases are distinguished:

a) In case of a handover to a GSM BSS controlled by the same MSC/VLR, the MSC/VLR sends the 64-bit GSM cipher key Kc from the key set used before the intersystem handover to the target BSC (which forwards it to the BTS).

b) In case of a handover to a GSM BSS controlled by another MSC/VLR (R99+ or R98-), the initial MSC/VLR sends the 64-bit GSM cipher key Kc from the key set used before the intersystem handover to the BSC via the new MSC/VLR controlling the target BSC. The initial MSC/VLR remains the anchor point throughout the service.

   If the non-anchor MSC/VLR is R99+, then the anchor MSC/VLR also derives and sends to the non-anchor MSC/VLR the UMTS cipher/integrity keys CK and IK. The non-anchor MSC/VLR stores all keys. This is done to allow subsequent handovers in a non-anchor R99+ MSC/VLR.

At the user side, in either case, the ME applies the GSM cipher key Kc from the key set which was used before the intersystem handover.

NWO EX2027
Samsung v Network-1, IPR2026-00114
Page 50 of 73

6.8.5 Intersystem handover for CS Services – from GSM BSS to UTRAN

If ciphering has been started when an intersystem handover occurs from GSM BSS to UTRAN, the necessary information (e.g. CK, IK, START value information, supported/allowed UMTS algorithms) is transmitted within the system infrastructure before the actual handover is executed to enable the communication to proceed from the old GSM BSS to the new RNC, and to continue the communication in ciphered mode. The GSM BSS requests the MS to send the UMTS capability information, which includes information on the START values and UMTS security capabilities of the MS. The intersystem handover will imply a change of ciphering algorithm from a GSM A5 to a UEA. The target UMTS RNC includes the selected UMTS ciphering mode in the handover to UTRAN command message sent to the MS via the GSM BSS.

The integrity protection of signalling messages shall be started immediately after the intersystem handover from GSM BSS to UTRAN is completed. The Serving RNC will do this by initiating the RRC security mode control procedure when the first RRC message (i.e. the Handover to UTRAN complete message) has been received from the MS. In this case, the RRC security mode control procedure is initiated by the Serving RNC without receipt of a corresponding RANAP security mode control procedure from the MSC/VLR.The UE security capability information, that has been sent from MS to RNC via the GSM radio access and the system infrastructure before the actual handover execution, will be included in the RRC Security mode command message sent to MS and then verified by the MS (i.e. verified that it is equal to the UE security capability information stored in the MS).

6.8.5.1 UMTS security context

A UMTS security context in GSM BSS is only established for UMTS subscribers with a ME that is capable of UMTS AKA under GSM BSS controlled by a R99+ VLR/SGSN. At the network side, two cases are distinguished:

a) In case of a handover to a UTRAN controlled by the same MSC/VLR, the UMTS cipher/integrity keys CK and IK from the key set used before the intersystem handover are sent to the target RNC.

b) In case of a handover to a UTRAN controlled by another MSC/VLR, the initial MSC/VLR sends the UMTS cipher/integrity keys CK and IK from the key set used before the intersystem handover to the new RNC via the new MSC/VLR that controls the target RNC. The initial MSC/VLR remains the anchor point for throughout the service.

   The anchor MSC/VLR also derives and sends to the non-anchor MSC/VLR the 64-bit GSM cipher key Kc. The non-anchor MSC/VLR stores all keys. This is done to allow subsequent handovers in a non-anchor R99+ MSC/VLR.

At the user side, in either case, the ME applies the UMTS cipher/integrity keys CK and IK from the key set which was used before the intersystem handover.

6.8.5.2 GSM security context

Handover from GSM BSS to UTRAN with a GSM security context is possible for a GSM subscriber with a R99+ ME or for a UMTS subscriber with a R99+ ME when the initial MSC/VLR is R98-. At the network side, two cases are distinguished:

a) In case of a handover to a UTRAN controlled by the same MSC/VLR, UMTS cipher/integrity keys CK and IK are derived from the 64-bit GSM cipher key Kc used before the intersystem handover (using the conversion functions c4 and c5) and sent to the target RNC. In case of subsequent handover in a non-anchor R99+ MSC/VLR, a 64-bit GSM cipher key Kc is received for a UMTS subscriber if the anchor MSC/VLR is R98-.

b) In case of a handover to a UTRAN controlled by another MSC/VLR, the initial MSC/VLR (R99+ or R98-) sends the 64-bit GSM cipher key Kc used before the intersystem handover to the new MSC/VLR controlling the target RNC. That MSC/VLR derives UMTS cipher/integrity keys CK and IK which are then forwarded to the target RNC. The initial MSC/VLR remains the anchor point for throughout the service.

At the user side, in either case, the ME derives the UMTS cipher/integrity keys CK and IK from the 64-bit GSM cipher key Kc (using the conversion functions c4 and c5) which was used before the intersystem handover and applies them.

NWO EX2027
Samsung v Network-1, IPR2026-00114
Page 51 of 73

6.8.6 Intersystem change for PS Services – from UTRAN to GSM BSS

6.8.6.1 UMTS security context

A UMTS security context in UTRAN is only established for UMTS subscribers. At the network side, four cases are distinguished:

a) In case of an intersystem change to a GSM BSS controlled by the same SGSN, the SGSN derives the 64-bit GSM cipher key Kc from the UMTS cipher/integrity keys CK and IK agreed during the latest UMTS AKA procedure (using the conversion function c3) and applies it if the selected GEA ciphering algorithm requires a 64-bit key.

b) In case of an intersystem change to a GSM BSS controlled by another R99+ SGSN, the initial SGSN sends the UMTS cipher/integrity keys CK and IK agreed during the latest UMTS AKA procedure to the new SGSN. The new SGSN stores the keys, derives the 64-bit GSM cipher key Kc and applies the latter. The new SGSN becomes the new anchor point for the service.

c) In case of an intersystem change to a GSM BSS controlled by a R98- SGSN, the initial SGSN derives the GSM cipher key Kc from the UMTS cipher/integrity keys CK and IK agreed during the latest UMTS AKA procedure and sends the GSM cipher key Kc to the new SGSN. The new SGSN stores the GSM cipher key Kc and applies it. The new SGSN becomes the new anchor point for the service.

d) In case of a handover to another Rel-9+ SGSN, the initial SGSN sends the UMTS cipher/integrity keys CK and IK agreed at the latest UMTS AKA procedure to the new SGSN. The new SGSN derives the 64-bit Kc. The new SGSN stores the keys. If the new SGSN selects a GEA ciphering algorithm requiring a 128-bit key, the new SGSN shall compute Kc_{128} from the CK/IK and shall apply it. If the new SGSN selects a GEA ciphering algorithm requiring a 64-bit key then Kc shall be applied. The new SGSN becomes the new anchor point for the service.

At the user side, in all cases, the ME applies the derived 64-bit GSM cipher key Kc received from the USIM during the latest UMTS AKA procedure if the selected GEA ciphering algorithm requires a 64-bit key. If the selected GEA ciphering algorithm requires a 128-bit key, the ME shall derive 128-bit GSM cipher key Kc_{128} from the CK and IK agreed during the latest UMTS AKA and apply it.

In case the current UMTS security context is mapped from an EPS security context and there has been no UMTS AKA run since the current UMTS security context was mapped, the CK , IK and Kc belonging to the mapped UMTS security context shall be considered to be the keys from the latest AKA.

6.8.6.2 GSM security context

A GSM security context in UTRAN is only established for GSM subscribers. At the network side, two cases are distinguished:

a) In case of an intersystem change to a GSM BSS controlled by the same SGSN, the SGSN starts to apply the 64-bit GSM cipher key Kc agreed during the latest GSM AKA procedure.

b) In case of an intersystem change to a GSM BSS controlled by another SGSN, the initial SGSN sends the 64-bit GSM cipher key Kc agreed during the latest GSM AKA procedure to the (new) SGSN controlling the BSC. The new SGSN stores the key and applies it. The new SGSN becomes the new anchor point for the service.

At the user side, in both cases, the ME applies the GSM cipher key Kc received from the SIM during the latest GSM AKA procedure.

6.8.7 Intersystem change for PS services – from GSM BSS to UTRAN

6.8.7.1 UMTS security context

A UMTS security context in GSM BSS is only established for UMTS subscribers with a ME that is capable of UMTS AKA and connected to a R99+ VLR/SGSN. At the network side, two cases are distinguished:

a) In case of an intersystem change to a UTRAN controlled by the same SGSN, the UMTS cipher/integrity keys CK and IK agreed during the latest UMTS AKA procedure are sent to the target RNC.

NWO EX2027
Samsung v Network-1, IPR2026-00114
Page 52 of 73

b) In case of an intersystem change to a UTRAN controlled by another SGSN, the initial SGSN sends the UMTS cipher/integrity keys CK and IK agreed during the latest UMTS AKA procedure to the (new) SGSN controlling the target RNC. The new SGSN becomes the new anchor point for the service. The new SGSN then stores the UMTS cipher/integrity keys CK and IK and sends them to the target RNC.

At the user side, in both cases, the ME applies the UMTS cipher/integrity keys CK and IK received from the USIM during the latest UMTS AKA procedure.

6.8.7.2 GSM security context

A GSM security context in GSM BSS can be either:

- **Established for a UMTS subscriber**

  A GSM security context for a UMTS subscriber is established in case the user has a ME not capable of UMTS AKA, where intersystem change to UTRAN is not possible, or in case the user has a R99+ ME but the SGSN is R98-, where intersystem change to UTRAN implies a change to a R99+ SGSN.

  As result, in case of intersystem change to a UTRAN controlled by another R99+ SGSN, the initial R98- SGSN sends the 64-bit GSM cipher key Kc agreed during the latest GSM AKA procedure to the new SGSN controlling the target RNC.

  Since the new R99+ SGSN has no indication of whether the subscriber is GSM or UMTS, a R99+ SGSN shall perform a new UMTS AKA when receiving the 64-bit Kc from a R98- SGSN. A UMTS security context using fresh quintets is then established between the R99+ SGSN and the USIM. The new SGSN becomes the new anchor point for the service.

  At the user side, new keys shall be agreed during the new UMTS AKA initiated by the R99+ SGSN.

- **Established for a GSM subscriber**

  Handover from GSM BSS to UTRAN for GSM subscriber is only possible with R99+ ME. At the network side, three cases are distinguished:

  a) In case of an intersystem change to a UTRAN controlled by the same SGSN, the SGSN derives UMTS cipher/integrity keys CK and IK from the 64-bit GSM cipher key Kc (using the conversion functions c4 and c5) agreed during the latest GSM AKA procedure and sends them to the target RNC.

  b) In case of an intersystem change from a R99+ SGSN to a UTRAN controlled by another SGSN, the initial SGSN sends the 64-bit GSM cipher key Kc agreed during the latest GSM AKA procedure to the (new) SGSN controlling the target RNC. The new SGSN becomes the new anchor point for the service. The new SGSN stores the 64-bit GSM cipher key Kc and derives the UMTS cipher/integrity keys CK and IK which are then forwarded to the target RNC.

  c) In case of an intersystem change from an R98-SGSN to a UTRAN controlled by another SGSN, the initial SGSN sends the 64-bit GSM cipher key Kc agreed during the latest GSM AKA procedure to the (new) SGSN controlling the target RNC. The new SGSN becomes the new anchor point for the service. To ensure use of UMTS keys for a possible UMTS subscriber (superfluous in this case), a R99+ SGSN will perform a new AKA when a R99+ ME is coming from a R98-SGSN.

  At the user side, in all cases, the ME derives the UMTS cipher/integrity keys CK and IK from the GSM cipher key Kc (using the conversion functions c4 and c5) received from the SIM during the latest GSM AKA procedure and applies them. In case c) these keys will be over-written with a new CK, IK pair due to the new AKA.

6.8.8 PS handover from Iu to Gb mode

PS Handover is described in TS 43.129 [23]

6.8.8.1 UMTS security context

A UMTS security context is only established for UMTS subscribers. At the network side, two cases are distinguished:

NWO EX2027
Samsung v Network-1, IPR2026-00114
Page 53 of 73

a) In case of a PS intra SGSN Handover, the SGSN derives the 64-bit GSM cipher key Kc from the UMTS cipher/integrity keys CK and IK agreed during the latest UMTS AKA procedure (using the conversion function c3) and applies it if the selected GEA ciphering algorithm requires a 64-bit key. If the selected GEA ciphering algorithm requires a 128-bit key, the SGSN shall apply the 128-bit GSM cipher key Kc_{128} derived from the CK and IK agreed during the latest UMTS AKA.

b) In case of a PS inter SGSN handover, the initial SGSN sends the UMTS cipher/integrity keys CK and IK agreed during the latest UMTS AKA procedure to the new SGSN. The new SGSN stores the keys, derives the 64-bit GSM cipher key Kc and applies the latter if the selected GEA ciphering algorithm requires a 64-bit key. If the selected GEA ciphering algorithm requires a 128-bit key, the SGSN shall apply the 128-bit GSM cipher key Kc_{128} derived from the CK and IK agreed during the latest UMTS AKA. The new SGSN becomes the new anchor point for the service.

At the user side, in all cases, the ME applies the derived GSM cipher key Kc received from the USIM during the latest UMTS AKA procedure if the selected GEA ciphering algorithm requires a 64-bit key. If the selected GEA ciphering algorithm requires a 128-bit key, the ME shall apply the derived 128-bit GSM cipher key Kc_{128} from the key set agreed during the latest UMTS AKA.

6.8.8.2 GSM security context

A GSM security context is only established for GSM subscribers. At the network side, two cases are distinguished:

a) In case of a PS intra SGSN Handover, the SGSN starts to apply the 64-bit GSM cipher key Kc agreed during the latest GSM AKA procedure.

b) In case of a PS inter SGSN Handover, the initial SGSN sends the 64-bit GSM cipher key Kc agreed during the latest GSM AKA procedure to the (new) SGSN. The new SGSN stores the key and applies it. The new SGSN becomes the new anchor point for the service.

At the user side, in both cases, the ME applies the 64-bit GSM cipher key Kc received from the SIM during the latest GSM AKA procedure.

6.8.9 PS handover from Gb to Iu mode

PS Handover is described in TS 43.129 [23]

6.8.9.1 UMTS security context

A UMTS security context is only established for UMTS subscribers. At the network side, two cases are distinguished:

a) In case of a PS intra SGSN Handover, the UMTS cipher/integrity keys CK and IK agreed during the latest UMTS AKA procedure are sent to the target RNC or BSC.

b) In case of a PS inter SGSN Handover, the initial SGSN sends the UMTS cipher/integrity keys CK and IK agreed during the latest UMTS AKA procedure to the new SGSN controlling the target RNC or BSC. The new SGSN becomes the new anchor point for the service. The new SGSN then stores the UMTS cipher/integrity keys CK and IK and sends them to the target RNC or BSC.

At the user side, in both cases, the ME applies the UMTS cipher/integrity keys CK and IK received from the USIM during the latest UMTS AKA procedure.

6.8.9.2 GSM security context

A GSM security context is only established for GSM subscribers. At the network side, two cases are distinguished:

a) In case of a PS intra SGSN handover the SGSN derives UMTS cipher/integrity keys CK and IK from the 64-bit GSM cipher key Kc (using the conversion functions c4 and c5) agreed during the latest GSM AKA procedure and sends them to the target RNC or BSC.

b) In case of a PS Inter SGSN handover the initial SGSN sends the 64-bit GSM cipher key Kc agreed during the latest GSM AKA procedure to the new SGSN controlling the target RNC or BSC. The new SGSN becomes the

NWO EX2027
Samsung v Network-1, IPR2026-00114
Page 54 of 73

new anchor point for the service. The new SGSN stores the 64-bit GSM cipher key Kc and derives the UMTS cipher/integrity keys CK and IK which are then forwarded to the target RNC or BSC.

At the user side, in all cases, the ME derives the UMTS cipher/integrity keys CK and IK from the 64-bit GSM cipher key Kc (using the conversion functions c4 and c5) received from the SIM during the latest GSM AKA procedure and applies them.

6.8.10 SRVCC – from HSPA to UTRAN/GERAN

HSPA SRVCC to UTRAN/GERAN is described in TS 25.331 [17].

Case 1: UMTS subscribers:

Case 1.1: HO to UTRAN
When the SRNC decides to start a SRVCC from HSPA to UTRAN, it shall initiate the SRVCC Preparation procedure described in TS 25.413 [31]. The source SGSN shall generate a NONCE and derive $CK'_{CS}||IK'_{CS}$ from the NONCE and the $CK_{PS}||IK_{PS}$ generated during the latest UMTS AKA procedure.

In case the current UMTS security context is mapped from an EPS security context and there has been no UMTS AKA run since the current UMTS security context was mapped, the CK_{PS}, IK_{PS} and GPRS Kc belonging to the mapped UMTS security context shall be considered to be the keys from the latest UMTS AKA.

The source SGSN shall transfer CK''_{CS}, IK''_{CS}, KSI''_{CS} (=KSI_{PS}) and the NONCE to the SRNC and transfer CK''_{CS}, IK''_{CS} and KSI''_{CS} (=KSI_{PS}) to the MSC server enhanced for SRVCC. The SRNC shall transfer the NONCE to the target RNC. The target RNC shall include the NONCE in the handover command to be sent to the UE. The SRNC shall also transfer the security context, including CK''_{CS}, IK''_{CS}, KSI''_{CS} and $START_{CS}$ (which is received by the SRNC during RRC connection establishment), to the target RNC.

Upon reception of the handover command, the ME shall derive $CK'_{CS}||IK'_{CS}$ from $CK_{PS}||IK_{PS}$ and the NONCE, and set KSI''_{CS} to KSI_{PS}. The ME shall convert GSM ciphering key Kc" from $CK''_{CS}||IK''_{CS}$, and set GSM $CKSN''_{CS}$ equal to KSI''_{CS}.

For the definition of the Key Derivation Function and its inputs see Annex B.3.

NOTE 1: Due to replacing all the UTRAN CS key parameters CK, IK, KSI with CK'_{CS}, IK'_{CS} and KSI''_{CS} on USIM and in ME, a new GSM ciphering key Kc" needs to be derived from the new UTRAN CS key parameters CK and IK (i.e. CK''_{CS} and IK''_{CS}), which is part of the new UMTS security context as well, as any old GSM ciphering key Kc stored on USIM and in ME, belongs to an old UMTS security context and can no longer be taken into use.

Case 1.2: HO to GERAN
When the SRVCC is from HSPA to GERAN, the source SGSN shall generate a NONCE and derive CK''_{CS}, and IK''_{CS} from the NONCE and the $CK_{PS}||IK_{PS}$ generated during the latest UMTS AKA procedure.

In case the current UMTS security context is mapped from an EPS security context and there has been no UMTS AKA run since the current UMTS security context was mapped, the CK_{PS}, IK_{PS} and GPRS Kc belonging to the mapped UMTS security context shall be considered to be the keys from the latest UMTS AKA.

The source SGSN shall append the NONCE to the GSM HO command, received from the target BSS, when forwarding the command to the SRNC. The SRNC shall forward the NONCE together with the GSM HO command to the UE.

The source SGSN shall transfer the security context, including CK''_{CS}, IK''_{CS} and KSI''_{CS} (=KSI_{PS}) to the MSC server enhanced for SRVCC. The MSC server enhanced for SRVCC and the ME shall convert $CK''_{CS}||IK''_{CS}$ to GSM ciphering key Kc", and set GSM $CKSN''_{CS}$ to KSI''_{CS}.

Upon reception of the handover command, the ME shall derive CK''_{CS}, and IK''_{CS} from $CK_{PS}||IK_{PS}$ and the NONCE, convert GSM ciphering key Kc" from $CK''_{CS}||IK''_{CS}$, and set GSM $CKSN''_{CS}$ to KSI''_{CS}.

For the definition of the Key Derivation Function and its inputs see Annex B.3.

NOTE 2: See note 1.

If a 128-bit GSM ciphering algorithm is taken into use, the target MSC server enhanced for SRVCC and UE shall derive the GSM ciphering key Kc_{128} key derived from $CK'_{CS}||IK'_{CS}$ as described in annex B.5.

NWO EX2027
Samsung v Network-1, IPR2026-00114
Page 55 of 73

For both cases 1.1 and 1.2:

The MSC server enhanced for SRVCC shall overwrite the stored parameters CK_{CS}, IK_{CS} and KSI_{CS} if any, with the parameters CK''_{CS}, IK''_{CS} and KSI''_{CS} received from the source SGSN when the SRVCC handover has been completed successfully. The ME shall overwrite the stored parameters CK_{CS}, IK_{CS} , KSI_{CS} , GSM ciphering key Kc and GSM $CKSN_{CS}$ if any, with the derived parameters CK''_{CS}, IK''_{CS}, KSI''_{CS}, GSM ciphering key Kc" and GSM $CKSN''_{CS}$ in both ME and USIM when the SRVCC handover has been completed successfully. If the SRVCC handover isn"t completed successfully, the MSC server enhanced for SRVCC and the UE shall discard CK''_{CS}, IK''_{CS} and KSI''_{CS}.

NOTE 1: The new derived security context overwriting the stored values in the USIM is for allowing reusing the derived security context without invoking the authentication procedure in the subsequent connection set-ups, and also for avoiding that one KSI value indicates to two different key sets and consequently leads to security context desynchronization.

NOTE 2: An operator concerned about the security of keys received from an UTRAN of another operator may want to enforce a policy in the MSC server to run an AKA as soon as possible after the handover. One example of ensuring this is the deletion of the derived security context in the MSC server after the UE has left active state.

The MSC server enhanced for SRVCC shall delete the stored parameters CK_{CS} and IK_{CS} if the SRVCC handover is not completed successfully.

Case 2: GSM subscribers

Case 2.1: HO to UTRAN

When the SRNC decides to start a SRVCC from HSPA to UTRAN, it shall initiate the SRVCC Preparation procedure (see TS 25.413). The source SGSN shall generate a NONCE and derive GSM ciphering key Kc" from the NONCE and the GPRS Kc generated in the latest successful GSM AKA.

The source SGSN shall set GSM $CKSN''_{CS}$ and KSI''_{CS} to GPRS $CKSN_{PS}$. . The source SGSN shall compute CK''_{CS}, IK''_{CS} from GSM ciphering key Kc", using the conversion functions c4 and c5, and transfer CK''_{CS}, IK''_{CS} and KSI''_{CS} to the SRNC. The SRNC shall transfer the NONCE to the target RNC. The target RNC shall include the NONCE in the handover command to be sent to the UE. The SRNC shall transfer the security context, including CK''_{CS}, IK''_{CS}, KSI''_{CS} and $START_{CS}$ (which is received by the SRNC during RRC connection establishment), to the target RNC.

The source SGSN shall also transfer GSM ciphering key Kc" and GSM $CKSN''_{CS}$ to the MSC server enhanced for SRVCC.

Upon reception of the handover command, the UE shall derive GSM ciphering key Kc" from the GPRS Kc generated in the latest successful GSM AKA and the NONCE. The UE shall set GSM $CKSN''_{CS}$ and KSI''_{CS} to GPRS $CKSN_{PS}$. The UE shall compute CK''_{CS}, IK''_{CS} from GSM ciphering key Kc", using the conversion functions c4 and c5.

For the definition of the Key Derivation Functions see Annex B.4.

Case 2.2: HO to GERAN

When the SRVCC is from HSPA to GERAN, the source SGSN shall generate a NONCE and derive GSM ciphering key Kc" from the NONCE and the 64-bit GPRS Kc generated in the latest successful GSM AKA.

The source SGSN shall append the NONCE to the GSM HO command, received from the target BSS, when forwarding the command to the SRNC. The SRNC shall forward the NONCE together with the GSM HO command to the UE.

The source SGSN shall set GSM $CKSN''_{CS}$ to GPRS $CKSN_{PS}$ and transfer GSM ciphering key Kc" and GSM $CKSN''_{CS}$ to the MSC server enhanced for SRVCC.

Upon reception of the handover command, the UE shall derive GSM ciphering key Kc" from the GPRS Kc generated in the latest successful GSM AKA and the NONCE, and set GSM $CKSN''_{CS}$ to GPRS $CKSN_{PS}$.

For the definition of the Key Derivation Functions see Annex B.4.

For both cases 2.1 and 2.2:

The MSC server enhanced for SRVCC shall overwrite the stored parameters 64-bit GSM ciphering key Kc and GSM $CKSN_{CS}$, if any, with the parameters GSM ciphering key Kc" and GSM $CKSN''_{CS}$ received from the source SGSN

NWO EX2027
Samsung v Network-1, IPR2026-00114
Page 56 of 73

when the SRVCC handover has been completed successfully. The UE shall overwrite the stored parameters 64-bit GSM ciphering key Kc and GSM $CKSN_{CS}$, if any, with the derived parameters GSM ciphering key Kc" and GSM $CKSN"_{CS}$ in both ME and SIM when the SRVCC handover has been completed successfully. If the SRVCC handover isn"t completed successfully, the MSC server enhanced for SRVCC and the UE shall discard GSM ciphering key Kc" and GSM $CKSN"_{CS}$.

NOTE 3: The new derived security context overwriting the stored values in the SIM is for allowing reusing the derived security context without invoking the authentication procedure in the subsequent connection set-ups, and also for avoiding that one CKSN value indicates to two different key sets and consequently leads to security context desynchronization.

If the SRVCC is for an emergency call and the session in HSPA complies with clause 6.4.9.1, the security procedure in this subclause shall be applied.

If the SRVCC is for an emergency call and the session in HSPA complies with clause 6.4.9.2, the security procedure in this subclause shall not be applied, i.e., no key derivation is needed.

The MSC server enhanced for SRVCC shall delete the stored parameters CK_{CS} and IK_{CS} if the SRVCC handover isn"t completed successfully, so for any subsequent CS connection a new CS key-set is generated.

7 Void

8 Application security mechanisms

8.1 Void

8.2 Void

8.3 Mobile IP security

The introduction of Mobile IP functionality for end users in 3G has no influence on the security architecture for 3G.

Mobile IP terminals may be equipped with security functionality independent of the 3G network access security in order to allow security functions outside the 3G network.

3G networks, supporting Mobile IP services, should support its inherent security functionality.

On the other hand, 3G network access security architecture can not be influenced or reduced by the Mobile IP option.

The Mobile IP security functionality must thus be separate from the 3G network access security and it is developed in an other forum, IETF.

NWO EX2027
Samsung v Network-1, IPR2026-00114
Page 57 of 73

Annex A (informative): Requirements analysis

[In this part of the document we will address the question "do the features meet the requirements?"]

NWO EX2027
Samsung v Network-1, IPR2026-00114
Page 58 of 73

Annex B (normative): Key derivation function

B.1 General

The KDF is used to derive different keys. The different input key and input strings S used with the KDF is defined in the subclauses of this annex.The general description of the KDF and the encodings of its inputs are as defined by TS 33.220 [30] subclauses B.1 and B.2

B.2 FC value allocations

The FC number space is controlled by TS 33.220 [30]. FC values allocated for this specification are in range of 0x30 – 0x3F.

B.3 Derivation of CK''_{CS}|| IK''_{CS} from CK_{PS}||IK_{PS}

This input string is used for UMTS subscribers when there is a need to derive CK''_{CS}|| IK''_{CS} from CK_{PS}||IK_{PS} during mapping the security contexts from HSPA to UTRAN/GERAN. The Key is the concatenation of CK_{PS}||IK_{PS} (which are 128 bits each), and the output is CK''_{CS}||IK''_{CS} (which are 128 bits each).

- FC = 0x30
- P0 = NONCE
- L0 = length of NONCE (i.e. 0x00 0x10)

Further, the GSM Kc" used in GERAN shall be derived from CK''_{CS}||IK''_{CS} using the key conversion function c3 defined in this specification.

B.4 Derivation of Kc" from Kc

This input string is used for GSM subscribers when there is a need to derive Kc" from the 64-bit Kc during mapping the security contexts from HSPA to UTRAN/GERAN. The Key is the concatenation of Kc || Kc || Kc || Kc || (which are 64 bits each), and the output Kc" is the 64 most significant bits of the KDF output.

- FC = 0x31
- P0 = NONCE
- L0 = length of NONCE (i.e. 0x00 0x10)

The Kc" used in GERAN directly. When the access is over UTRAN, CK''_{CS}||IK''_{CS} shall be further derived from Kc" using the key conversion functions c4 and c5 defined in this specification.

B.5 Derivation of Kc_{128}

This input string is used when there is a need to derive Kc_{128} from CK and IK. The key Kc_{128} is used as input to the GSM A5 and GEA ciphering algorithms which requires 128-bit keys.

- FC = 0x32

The Key input is the concatenation of CK and IK (i.e., CK || IK). No input parameters (Pi, Li) are used by this function. The KDF returns a 256-bit output, where the 128 most significant bits are identified with Kc_{128}.

NWO EX2027
Samsung v Network-1, IPR2026-00114
Page 59 of 73

Annex C (informative): Management of sequence numbers

This annex is devoted to the management of sequence numbers for the authentication and key agreement protocol.

C.1 Generation of sequence numbers in the Authentication Centre

C.1.1 Sequence number generation schemes

C.1.1.1 General scheme

According to section 6.3 of this specification, authentication vectors are generated in the authentication centre (AuC) using sequence numbers. This section specifies how these sequence numbers are generated. Authentication vectors may be generated and sent by the AuC in batches. The sequence numbers for the authentication vectors in a batch are generated one after the other according to the process described below.

(1) In its binary representation, the sequence number consists of two concatenated parts $SQN = SEQ \| IND$. IND is an index used in the array scheme described in C.1.2 and C.2.2. SEQ in its turn consists of two concatenated parts $SEQ = SEQ1 \| SEQ2$. $SEQ1$ represents the most significant bits of SEQ, and $SEQ2$ represents the least significant bits of SEQ. IND represents the least significant bits of SQN.

(2) There is a counter SQN_{HE} in the HE. SQN is stored by this counter. SQN_{HE} is an individual counter, i.e. there is one per user. We have $SQN_{HE} = SEQ_{HE} \| IND_{HE}$.

(3) There is a global counter, e.g. a clock giving universal time. For short we call the value of this global counter at any one time GLC. If GLC is taken from a clock it is computed mod p, where $p = 2^n$ and n is the length of GLC and of $SEQ2$ in bits.

(4) If GLC is taken from a clock then there is a number $D > 0$ such that the following holds:
(i) the time interval between two consecutive increases of the clock (the clock unit) shall be chosen such that, for each user, at most D batches are generated at the AuC during any D clock units;
(ii) the clock rate shall be significantly higher than the average rate at which batches are generated for any user;
(iii) $D << 2^n$.

(5) When the HE needs new sequence numbers SQN to create a new batch of authentication vectors, HE retrieves the (user-specific) value of $SEQ_{HE} = SEQ1_{HE} \| SEQ2_{HE}$ from the database.
(i) If $SEQ2_{HE} < GLC < SEQ2_{HE} + p - D + 1$ then HE sets $SEQ = SEQ1_{HE} \| GLC$;
(ii) if $GLC \leq SEQ2_{HE} \leq GLC+D - 1$ or $SEQ2_{HE} + p - D + 1 \leq GLC$ then HE sets $SEQ = SEQ_{HE} +1$;
(iii) if $GLC+D - 1 < SEQ2_{HE}$ then HE sets $SEQ = (SEQ1_{HE} +1) \| GLC$.
(iv) After the generation of the authentication vector has been completed SEQ_{HE} is reset to SEQ;
(v) for the handling of IND see C.1.2.

NOTES

1. The clock unit and the value D have to be chosen with care so that condition (4)(i) is satisfied for every user at all times. Otherwise, user identity confidentiality may be compromised. When the parameters are chosen appropriately sequence numbers for a particular user do not reveal significant information about the user's identity.
   If authentication vectors for the CS and the PS domains are not separated by other means it is recommended to choose $D > 1$ as requests from the two different domains may arrive completely independently.

NWO EX2027
Samsung v Network-1, IPR2026-00114
Page 60 of 73

2. By setting the parameters in C.1.1.1 (1) to (5) in an appropriate way the general scheme specified in this subsection also includes the cases where either SEQ2 is void and SEQ = SEQ1 or else, SEQ1 is void and SEQ = SEQ2, as follows:
   (a) If SEQ2 is void the generation of sequence numbers is not time-based. We then formally set SEQ2 ≡ GLC ≡ 0 (identical to zero) and D = 1. Conditions (4)(i) to (iii) do not apply as there is no clock. Then (5)(ii) always holds, and SEQ is incremented by 1 at each request. For better readability, this case is separated out in C.1.1.2.
   (b) If SEQ1 is void then we set D = 1. Assuming a start condition $SEQ2_{HE}$ < GLC and the absence of failures in the AuC, the condition (5)(i) then always holds, and SEQ = GLC for each request, i.e. the generation of sequence numbers is entirely time-based. In order to also accommodate potential failures in the AuC for entirely time-based sequence number , the variant described in the following Annex C.1.1.3 may be used.

C.1.1.2 Generation of sequence numbers which are not time-based

The HE/AuC shall maintain a counter for each user, $SQN_{HE} = SEQ_{HE} \| IND_{HE}$. To generate a fresh sequence number, SEQ_{HE} is incremented by 1, and the new counter value is used to generate the next authentication vector. For the handling of *IND* see C.1.2.

C.1.1.3 Time-based sequence number generation

In its binary representation, the sequence number consists of two concatenated parts $SQN = SEQ \| IND$. The part *SEQ* is not divided into two parts. The global counter *GLC* is thus as long as *SEQ*. Instead of storing the individual counter SEQ_{HE} in the HE there is a value *DIF* stored in the HE which is individual for each user. The *DIF* value represents the current difference between generated *SEQ* values for that user and the *GLC*.

When the HE needs new sequence numbers *SQN* to create new authentication vectors, HE retrieves the (user-specific) value of *DIF* from the data base and calculates *SEQ* values as $SEQ = GLC + DIF$.

The *DIF* value may have to be updated in the HE only during the re-synchronization procedure. In this case the DIF value is set as $DIF = SEQ_{MS} - GLC$ where $SQN_{MS} = SEQ_{MS} \| IND_{MS}$ is the value sent by USIM in the re-synchronization procedure.

C.1.2 Support for the array mechanism

This subsection applies to all three schemes presented in subsection C.1.1.

Each time an authentication vector is generated, the AuC shall retrieve IND_{HE} from storage and allocate a new index value *IND* for that vector according to suitable rules and include it in the appropriate part of *SQN*. The index value may range from 0 to a -1 where a is the size of the array.

An example value for the array size a is given in Annex C.3.
The exact rules for index allocation are left unspecified. Guidelines are given in Annex C.3.4.

C.2 Handling of sequence numbers in the USIM

This section assumes that sequence numbers are generated according to Annex C.1.

The USIM keeps track of an array of sequence number values it has accepted. Let $SQN_{MS} = SEQ_{MS} \| IND_{MS}$ denote the highest sequence number in the array.

NWO EX2027
Samsung v Network-1, IPR2026-00114
Page 61 of 73

C.2.1 Protection against wrap around of counter in the USIM

The USIM will not accept arbitrary jumps in sequence numbers, but only increases by a value of at most Δ.

Therefore (before applying the freshness conditions of Annex C.2.2) the received sequence number SQN shall only be accepted by the USIM if $SEQ\text{-}SEQ_{MS} \leq \Delta$. If SQN can not be accepted then the USIM shall generate a synchronisation failure message using SQN_{MS}.

Conditions on the choice of Δ:

(1) Δ shall be sufficiently large so that the MS will not receive any sequence number with $SEQ - SEQ_{MS} > \Delta$ if the HE/AuC functions correctly.

(2) In order to prevent that SEQ_{MS} ever reaches the maximum batch number value *SEQmax* during the lifetime of the USIM the minimum number of steps $SEQmax / \Delta$ required to reach *SEQmax* shall be sufficiently large.

C.2.2 Verification of sequence number freshness in the USIM

The USIM shall maintain an array of *a* previously accepted sequence number components: SEQ_{MS} (0), SEQ_{MS} (1),… SEQ_{MS} (*a*-1). The initial sequence number value in each array element shall be zero.

To verify that the received sequence number *SQN* is fresh, the USIM shall compare the received *SQN* with the sequence number in the array element indexed using the index value *IND* contained in *SQN*, i.e. with the array entry SEQ_{MS} (i) where i = *IND* is the index value.

(a) If $SEQ > SEQ_{MS}$ (i) the USIM shall consider the sequence number to be guaranteed fresh and subsequently shall set SEQ_{MS} (i) to *SEQ*.

(b) If $SEQ \leq SEQ_{MS}$ (i) the USIM shall generate a synchronisation failure message using the highest previously accepted sequence number anywhere in the array, i.e. SQN_{MS}.

The USIM shall also be able to put a limit *L* on the difference between SEQ_{MS} and a received sequence number component *SEQ*. If such a limit *L* is applied then, before verifying the above conditions (a) and (b), the sequence number shall only be accepted by the USIM if $SEQ_{MS} - SEQ < L$. If *SQN* can not be accepted then the USIM shall generate a synchronisation failure message using SQN_{MS}.

C.2.3 Notes

1. Using the above array mechanism, it is not required that a previously visited VLR/SGSN deletes the unused authentication vectors when a user de-registers from the serving network (super-charger concept). Retaining the authentication vectors for use when the user returns later may be more efficient as regards signalling when a user abroad switches a lot between two serving networks.

2. The array mechanism may also be used to avoid unjustified rejection of user authentication requests when authentication vectors in two VLR/SGSNs from different mobility management domains (circuit and packet) are used in an interleaving fashion.

3. When a VLR/SGSN uses fresh authentication vectors obtained during a previous visit of the user, the USIM can reject them although they have not been used before (because the array size *a* and the age limit *L* are finite). Rejection of a sequence number can therefore occur in normal operation, i.e., it is not necessarily caused by (malicious) replay or a database failure.

4. The mechanism presented in this section may allow the USIM to exploit knowledge about which authentication vectors were sent to the same VLR/SGSN. It may be assumed that authentication vectors sent to the same VLR/SGSN are always used in the correct order. Consequently, only one sequence number among those sent to the same VLR/SGSN has to be stored.

5. With the exception of SQN_{MS}, the entries of the array need not be stored in full length if a limit *L* (age limit) on the difference between SEQ_{MS} and a received sequence number component *SEQ* is applied.

6. Condition (2) of Annex C.2.1 on Δ means that SQN_{MS} can reach its maximum value only after a minimum of $SEQmax / \Delta$ successful authentications have taken place.

NWO EX2027
Samsung v Network-1, IPR2026-00114
Page 62 of 73

7. There is a dependency of the choice of Δ and the size *n* of global counter GLC in Annex C.1.1.1: Δ shall be chosen larger than 2^n.

C.3 Sequence number management profiles

This section provides examples how values for the parameters defined in sections C.1 and C.2 may be chosen in a coherent way. These examples may serve as references when specifying practical sequence number management schemes. There is one example set of values for each of the three types of sequence number generation schemes:

- partly time-based corresponding to Annex C.1.1.1;
- not time-based corresponding to Annex C.1.1.2;
- entirely time-based corresponding to Annex C.1.1.3.

C.3.1 Profile 1: management of sequence numbers which are partly time-based

Generation of sequence numbers:

This follows the general scheme for the generation of sequence numbers specified in Annex C.1.1.1. The following parameter values are suggested for reference:

Time unit of the clock: 1 second

Length of IND in bits = 5.

Length of SEQ2 in bits = n : 24
This means that GLC will wrap around after $p = 2^n = 2^{24}$ seconds = 194 days. This ensures that most users will have become active at least once during this period.
This implies a length of SEQ1 in bits = 19.

Start conditions: Choose $SQN_{HE} = 0$ for all users and GLC = 1.

Arrival rate temporarily higher than clock rate: Choose $D = 2^{16}$.
D may be chosen quite large as long as the conditions in C.1.1.1 (4)(ii) and (iii) are satisfied. Choosing $D = 2^{16} = 65536$ means that the condition in C.1.1.1 (4)(i) is satisfied unless more than 65536 requests for batches arrive within over 18 hours which is practically impossible.

Verification of sequence numbers in the USIM:

This follows the handling of sequence numbers in the USIM specified in Annex C.2.

Length of the array: a = 32.
This satisfies the requirement in section 6.3.2 that the mechanism for the verification of sequence numbers shall ensure that a sequence number can still be accepted if it is among the last x sequence numbers generated.

Protection against wrap around: Choose $\Delta = 2^{28}$.
Choosing $\Delta = 2^{28}$ means that an attack to force the counter in the USIM to wrap around would require at least $SEQmax/\Delta = 2^{15} > 32.000$ successful authentications (cf. note 6 of C.2.3). We have $\Delta > p$, as required in note 7 of C.2.3.

Age limit for sequence numbers:
The use of such a limit is optional. The choice of a value for the parameter L affects only the USIM. It has no impact on the choice of other parameters and it entirely up to the operator, depending on his security policy. Therefore no particular value is suggested here. To give an example: if the policy stipulates that authentication vectors older than x seconds shall be rejected then L has to be set to x as the time unit of the clock is 1 second.

User anonymity: the value of SQN does not allow to trace the user over longer periods. Therefore, there may be no need to conceal SQN by an anonymity key as specified in section 6.3.

NWO EX2027
Samsung v Network-1, IPR2026-00114
Page 63 of 73

C.3.2 Profile 2: management of sequence numbers which are not time-based

Generation of sequence numbers:

This follows the scheme for the generation of sequence numbers specified in Annex C.1.1.2. The following parameter values are suggested for reference:

Length of IND in bits = 5.

Start conditions: $SQN_{HE} = 0$ for all users.

Verification of sequence numbers in the USIM:

Length of the array: a = 32

Protection against wrap around: Choose $\Delta = 2^{28}$.
Choosing $\Delta = 2^{28}$ means that an attack to force the counter in the USIM to wrap around would require at least $SEQmax/\Delta = 2^{15} > 32.000$ successful authentications (cf. note 6 of C.2.3). Note 7 of Annex C.2.3 does not apply.

Age limit for sequence numbers:
There is no clock here. So, the 'age' limit would be interpreted as the maximum allowed difference between SQN_{MS} (see section 6.3) and the sequence number received. The use of such a limit is optional. The choice of a value for the parameter L affects only the USIM. It has no impact on the choice of other parameters and it entirely up to the operator, depending on his security policy. Therefore no particular value is suggested here.

User anonymity: the value of SQN may allow to trace the user over longer periods. If this is a concern then SQN has to be concealed by an anonymity key as specified in section 6.3.

C.3.3 Profile 3: management of sequence numbers which are entirely time-based

Generation of sequence numbers:

This follows the scheme for the generation of sequence numbers specified in Annex C.1.1.3. The following parameter values are suggested for reference:

Time unit of the clock: It has to be chosen in such a way that no two requests for a batch of authentication vectors arrive during one time unit. Value = 0.1 seconds

Length of IND in bits = 5.

Start conditions: GLC = 1 and, for all users, DIF = 0.

Verification of sequence numbers in the USIM:

This is done according to the handling of sequence numbers in the USIM specified in Annex C.2.

Length of the array: a = 32.
This satisfies the requirement in section 6.3.2 that the mechanism for the verification of sequence numbers shall ensure that a sequence number can still be accepted if it is among the last x sequence numbers generated.

Protection against wrap around: Choose $\Delta = 2^{28}$.
Choosing $\Delta = 2^{28}$ means that an attack to force the counter in the USIM to wrap around would require at least $SEQmax/\Delta = 2^{15} > 32.000$ successful authentications (cf. note 6 of C.2.3). Note 7 of C.2.3 does not apply.

Age limit for sequence numbers:
The use of such a limit is optional. The choice of a value for the parameter L affects only the USIM. It has no impact on the choice of other parameters and it entirely up to the operator, depending on his security policy. Therefore no particular value is suggested here. To give an example: if the policy stipulates that authentication vectors older than x time units shall be rejected then L has to be set to x.

NWO EX2027
Samsung v Network-1, IPR2026-00114
Page 64 of 73

User anonymity: the value of SQN does not allow to trace the user over longer periods. Therefore, there may be no need to conceal SQN by an anonymity key as specified in section 6.3.

C.3.4 Guidelines for the allocation of the index values in the array scheme

- **General rule**: index values *IND* used in the array scheme, according to Annex C.1.2, shall be allocated cyclically within its range 0, ... , *a-1*. This means that the index value *IND* used with the previously generated authentication vector is stored in SQN_{HE} , and the next authentication vector shall use index value *IND +1 mod a*.

It may be useful to allow exceptions to this general rule when additional information is available. This includes:

- Authentication vectors distributed within the same batch shall have the same index value.

  The Authentication Data Request MAP message contains information about the domain type (CS or PS) of the requesting serving node from which the request originates. It is recommended to use this information in the following way. Support for this use is, however, not required for an implementation to claim compliance to Annex C.

- Authentication vectors distributed to different service domains shall have different index values (i.e. separate ranges of index values are reserved for PS and CS operation).

In future releases there may be additional information about the requesting node identity. If this information is available it is recommended to use it in the following way:

- If the new request comes from the same serving node as the previous request, then the index value used for the new request shall be the same as was used for the previous request.

C.4 Guidelines for interoperability in a multi-vendor environment

The specification of a sequence number management scheme affects only the USIM and the AuC which are both under the control of one operator. Therefore, the specification of such a scheme is entirely at the discretion of an operator. Nevertheless, certain operators may not want to define a scheme of their own. Instead, they may want to rely on vendors implementing one of the schemes according to the profiles in C.3 or variants thereof. If these operators have multiple vendors for USIMs and/or AuCs, and the operators wish to move subscribers from the AuC of one vendor to that supplied by another one implementing a different scheme then this will work smoothly only when the following guidelines are adhered to by all the sequence number management schemes implemented in the operator"s domain.

- The array mechanism specified in clauses C.1.2 and C.2 is used in the USIM to verify SQNs. The length of the IND used by the USIM to index the array shall be not less than the length of the IND used by the AuC when allocating index values. However, it is recommended that the same IND length of 5 bits is used in USIMs and AuCs. This is the same IND length as proposed for all profiles in clause C.3.

- Relation to Annex F: if the AMF field is used to signal further parameters relevant to sequence number management (age limit L) then the formats of the AMF and its interpretation by the USIM must be the same for all implementations in the operator"s domain.

- Δ is larger than a specified minimum.
  This is necessary to accommodate schemes as in C.3.2 according to note 7 of C.2.3.
  We propose $\Delta \geq 2^{28}$.

- There are no requirements on the synchronicity of clocks in different AuCs for the time-based schemes. For the entirely time-based scheme, the following is recommended when moving users from one AuC to another one: The DIF value is updated in an appropriate manner when moving subscribers from an AuC to another AuC. More specifically, assume a user is moved from AuC1 to AuC2. If AuC1 is of profile 3 and AuC2 is of any profile then AuC1 sends GLC+DIF as SEQ_HE to AuC2. In the receiving end, if AuC2 is of profile 3 while AuC1 is of any profile then AuC2 sets DIF value for this user as DIF = SEQ_HE - GLC.

NWO EX2027
Samsung v Network-1, IPR2026-00114
Page 65 of 73

Annex D:
Void

NWO EX2027
Samsung v Network-1, IPR2026-00114
Page 66 of 73

Annex E:
Void

NWO EX2027
Samsung v Network-1, IPR2026-00114
Page 67 of 73

Annex F (informative): Example uses of the proprietary part of the AMF

F.1 Support multiple authentication algorithms and keys

A mechanism to support the use of multiple authentication and key agreement algorithms is useful for disaster recovery purposes. AMF may be used to indicate the algorithm and key used to generate a particular authentication vector.

The USIM keeps track of the authentication algorithm and key identifier and updates it according to the value received in an accepted network authentication token.

F.2 Changing sequence number verification parameters

This mechanism is used in conjunction with the mechanism for the verification of sequence number freshness in the USIM described in C.2.2.

The USIM shall also be able to put a limit L on the difference between SEQ_{MS} (the highest SEQ accepted so far) and a received sequence number SEQ. A mechanism to change this parameter L dynamically is useful since the optimum for these parameters may change over time. AMF is used to indicate a new value of L to be used by the USIM.

F.3 Setting threshold values to restrict the lifetime of cipher and integrity keys

According to section 6.4.3, the USIM contains a mechanism to limit the amount of data that is protected by an access link key set. The AMF field may be used by the operator to set or adjust this limit in the USIM. For instance, there could be two threshold values and the AMF field instructs the USIM to switch between them.

The USIM keeps track of the limit to the key set life time and updates it according to the value received in an accepted network authentication token.

NWO EX2027
Samsung v Network-1, IPR2026-00114
Page 68 of 73

Annex G (normative): Support of algorithm change features

UEA2 and UIA2 have been developed as back up algorithms which should be installed in RNCs as soon as possible so that they are available for use in the hopefully unlikely event that the current algorithms UEA1 and UIA1 become compromised. Therefore it is reasonable to expect that operators will have been able to upgrade all their RNCs before the new algorithms need to be enabled. Consequently, algorithm change is only required at inter-network handover.

Based on the above assumptions, the following feature shall be supported:

- Encryption/integrity algorithm change at SRNC relocation with hard inter-network handover.

Based on the above assumptions, the following features do not have to be supported:

- Encryption/integrity algorithm change at "UE not involved" SRNC relocation for both the DCH and FACH cases.

NOTE: Only applies to intra-network case, since Iur is not supported between operators.

- Encryption/integrity algorithm change at SRNC relocation with hard intra-network handover.

NWO EX2027
Samsung v Network-1, IPR2026-00114
Page 69 of 73

Annex H (normative): Usage of the AMF

The 16 bits in the AMF are numbered from "0" to "15" where bit "0" is the most significant bit and bit "15" is the least significant bit (see subclause 3.4)

Bit "0" is called the "AMF separation bit". It is used for the purposes of EPS (Evolved Packet System) and is specified in

- TS 33.401 [28] for E-UTRAN access to EPS;
- TS 33.402 [29] for non-3GPP access to EPS.

Bits "1" to "7" are reserved for future standardization use.

Bits "8" to "15" can be used for proprietary purposes. See Annex F for examples usages.

NWO EX2027
Samsung v Network-1, IPR2026-00114
Page 70 of 73

Annex I (informative): Change history

Change history					
TSG SA #	**Version**	**CR**	**Tdoc SA**	**New Version**	**Subject/Comment**
SP-03	2.0.0	-	-	3.0.0	Approved at SA#3 and placed under TSG SA Change Control
SP-11	3.7.0	135	SP-010131	3.8.0	RES has to be a multiple of 8 bits
SP-11	3.7.0	136	SP-010131	3.8.0	Add bit ordering convention
SP-11	3.7.0	137	SP-010131	3.8.0	Timing of security mode procedure
SP-11	3.7.0	140	SP-010131	3.8.0	Correction to the handling of re-transmitted authentication request messages on the ME
SP-11	3.7.0	141	SP-010131	3.8.0	Optional Support for USIM-ME interface for GSM-Only ME
SP-11	3.7.0	142	SP-010131	3.8.0	Definition corrections
SP-11	3.7.0	143	SP-010131	3.8.0	GSM ciphering capability Handling in Security Mode set up procedure
SP-11	3.8.0	138	SP-010132	4.0.0	Add requesting node type to authentication data request
SP-11	3.8.0	139	SP-010132	4.0.0	Provide additional information to HE to detect fraud conditions.
SP-12	4.0.0	145	SP-010313	4.1.0	Correction to periodic local authentication
SP-12	4.0.0	147	SP-010314	4.1.0	Correction to COUNT-C description
SP-12	4.0.0	150	SP-010316	4.1.0	Calculation and Wrap-around of START value
SP-12	4.0.0	152	SP-010317	4.1.0	Correction to integrity protection when the user is attached to a UTRAN with R99+ ME with a SIM inserted
SP-12	4.0.0	154	SP-010319	4.1.0	THRESHOLD Check at RRC connection establishment
SP-13	4.1.0	155r1	SP-010492	4.2.0	Removing the list of access type codes from authentication failure report
SP-14	4.2.0	157	SP-010608	4.3.0	Annex F.2 (changing list parameters) modification
SP-14	4.2.0	159	SP-010609	4.3.0	Sequence Number Management Corrections
SP-14	4.2.0	161	SP-010610	4.3.0	SQN_{MS} retrieval in AuC during resynchronisation
SP-16	4.3.0	166	SP-020340	4.4.0	Optional use of Access Link Data Confidentiality
SP-16	4.3.0	170r1	SP-020342	4.4.0	Encryption/Integrity algorithms ordered by preference in Security Mode command
SP-16	4.3.0	172	SP-020343	4.4.0	Correction of (U)SIM toolkit security reference
SP-16	4.4.0	174r1	SP-020385	5.0.0	Clarification of sequence number management (Rel-5 created)
SP-18	5.0.0	175	SP-020700	5.1.0	USIM support in GERAN only terminals
SP-18	5.0.0	178	SP-020790	5.1.0	Correction to the START formula
SP-20	5.1.0	179	SP-030224	5.2.0	Handling of START values stored on a ME for use with a SIM
SP-21	5.2.0	181	SP-030476	5.3.0	IMEISV retrieval before completion of security mode setup procedure
SP-21	5.2.0	182	SP-030476	5.3.0	Mitigation against a man-in-the-middle attack associated with early UE handling
SP-21	5.2.0	180	SP-030475	6.0.0	Clarification on the usage of the c3 conversion function
SP-24	6.0.0	185	SP-040370	6.1.0	Handling of key sets at inter-system change
SP-24	6.0.0	186	SP-040369	6.1.0	Clarification on Authentication re-attempt parameter
SP-25	6.1.0	188	SP-040627	6.2.0	Correction to mis-implementation of CR175: Rel4- definition
SP-26	6.2.0	189	SP-040852	6.3.0	Correction of Abbreviation for USIM
SP-26	6.2.0	190R1	SP-040852	6.3.0	Correction of TMUI to TMSI in a figure
SP-26	6.2.0	191R3	SP-040852	6.3.0	Support of algorithms in UEs and RNCs
SP-29	6.3.0	0194	SP-050542	6.4.0	Keystatus sent by CN node in Security Mode Command
SP-29	6.3.0	0195	SP-050549	6.4.0	Incorrect usage of COUNT-I in security mode set-up procedure
SP-30	6.4.0	0196	SP-050771	6.5.0	Clarify key set handling for PS handover
SP-30	6.4.0	0198	SP-050761	6.5.0	Correction on Keystatus sent by CN node in Security Mode Command
SP-30	6.5.0	-	SP-050654	7.0.0	Raised to Rel-7 to allow reference by TISPAN
SP-34	7.0.0	0199R1	SP-060806	7.1.0	Support of algorithm change features
SP-34	7.0.0	0200R1	SP-060806	7.1.0	Support of UIA2, UEA2 algorithms
SP-40	8.0.0	0203R2	SP-080267	8.0.0	Reserve 8 AMF bits for standardization purposes
SP-42	8.0.0	0204	SP-080743	8.1.0	Correction on the storage of keys on the USIM
SP-43	8.1.0	0206	SP-090138	8.2.0	Update of definition of UMTS security context
SP-43	8.1.0	0205	SP-090137	8.2.0	Generation and use of the mapped security context in HSPA SRVCC
SP-43	8.1.0	0205	SP-090136	8.2.0	Add reference to ciphering indicator feature specification
SP-44	8.2.0	0229	SP-090278	8.3.0	Correction of security procedure of HSPA SRVCC
SP-45	8.3.0	0207	SP-090560	8.4.0	Reformulation of security procedure of HSPA SRVCC
SP-45	8.4.0	0208	SP-090635	9.0.0	Derivation of Kc128 with UMTS AKA
SP-46	9.0.0	0210	SP-090861	9.1.0	Mandating integrity protection of reject messages that cause CSG list to be modified
SP-46	9.0.0	0211	SP-090823	9.1.0	Replacing KDF definition with a reference

Change history					
TSG SA #	Version	CR	Tdoc SA	New Version	Subject/Comment
SP-46	9.0.0	0213	SP-090824	9.1.0	Security considerations for emergency sessions in HSPA SRVCC
SP-46	9.0.0	0214	SP-090824	9.1.0	Delete the CS keys in the MSC enhanced for SRVCC in case there is desynchronization of CS keys between the UE and the network in HSPA SRVCC
SP-46	9.0.0	0215	SP-090824	9.1.0	Security for PS emergency sessions
SP-46	9.0.0	0216	SP-090821	9.1.0	Handling of Kc128 upon power-on or reinsertion of the USIM.
SP-47	9.1.0	0231	--	9.2.0	Correct Kc to Kc" when derived from CK"CS||IK"CS
SP-47	9.1.0	0232	--	9.2.0	Correction of Kc derivation for Kc128 capable SGSNs
SP-47	9.1.0	0235	--	9.2.0	Define the bits from the KDF output, assigned to key Kc128
SP-47	9.1.0	0234	--	9.2.0	Correction of IRAT mobility before UMTS AKA is run
SP-49	9.2.0	0236	SP-100475	9.3.0	Derivation of the security context for CS domain because of SRVCC
SP-50	9.3.0	0238	SP-100713	9.4.0	Authentication Failure Handling
SP-50	9.3.0	0237	SP-100712	10.0.0	Note regarding GERAN security functions, e.g., the usage of Kc128," can be found in the TS 43.020

History

Document history		
V10.0.0	May 2011	Publication

NWO EX2027
Samsung v Network-1, IPR2026-00114
Page 73 of 73