IN THE UNITED STATES DISTRICT COURT
FOR THE EASTERN DISTRICT OF TEXAS
MARSHALL DIVISION

NETWORK-1 TECHNOLOGIES, INC.	§	**Civil Action No. 2:25-cv-00667**
Plaintiff,	§	
	§	**Jury Trial Requested**
v.	§	
SAMSUNG ELECTRONICS CO., LTD. and SAMSUNG ELECTRONICS AMERICA, INC.;	§	
Defendants.	§	

COMPLAINT FOR PATENT INFRINGEMENT

Petitioner Samsung Ex-1033, 0001

Plaintiff, Network-1 Technologies, Inc. ("Network-1"), for its Complaint against Defendants Samsung Electronics Co., Ltd., ("SEC") and Samsung Electronics America, Inc. ("SEA") (collectively "Samsung"), requests a trial by jury and alleges as follows upon actual knowledge with respect to itself and its own acts and upon information and belief as to all other matters:

NATURE OF THE ACTION

1. This is an action for patent infringement brought by Network-1 as the owner of the patents asserted in this Complaint. Network-1 alleges that Samsung infringes certain of its eSIM patents and its 5G authentication patents, including U.S. Patent Nos. 11,233,780 ("the '780 Patent") (Ex. A); 11,916,893 ("the '893 Patent") (Ex. B); 12,207,094 ("the '094 Patent") (Ex. C); 12,166,869 ("the '869 Patent") (Ex. D); 11,606,204 ("the '204 Patent") (Ex. E); and 11,973,864 ("the '864 Patent") (Ex. F) (collectively, the "Asserted Patents"), copies of which are attached hereto as Exhibits A-F.

2. Network-1 alleges that Samsung directly infringes each of the Asserted Patents by making, using, offering for sale, selling and/or importing the Accused Products described below, in the United States without a license to do so. Network-1 further alleges that Samsung induces infringement by other third parties through their use of the Samsung Accused Products as directed and instructed by Samsung. Network-1 seeks damages and other compensatory relief for Samsung's past and continued infringement of the Asserted Patents.

THE PARTIES

3. Network-1 is a corporation organized under the laws of Delaware with its principal place of business at 65 Locust Ave., New Canaan, CT 06840.

Petitioner Samsung Ex-1033, 0002

4. Network-1 is the assignee and owner of the Asserted Patents through assignment on December 29, 2017, from M2M and IOT Technologies, LLC ("M2M") to Network-1. M2M was the original owner of the Asserted Patents through assignment from the named inventor, John A. Nix.

5. On information and belief, Defendant SEC is a corporation organized under the laws of South Korea. It has its principal place of business at 129 Samsung-ro, Yeongtong-gu, Gyeonggi-do 16677 Suwon-Si, South Korea. As the foreign parent, SEC directs and manages the operations of its wholly-owned US subsidiaries, including co-Defendant SEA.

6. On information and belief, Defendant SEA is a corporation organized under the laws of New York with its principal place of business at 85 Challenger Rd., Ridgefield Park, NJ 07660. SEA is registered to do business in the state of Texas. SEA has appointed CT Corporation System 1999 Bryan St., Suite 900, Dallas, TX 75201 as its agent for service of process. SEA is a wholly owned subsidiary of SEC and oversees domestic sales and distribution of Samsung's consumer electronics products, including the products accused of infringement in this case.

7. SEC and SEA have acted in concert with respect to the facts alleged herein such that any act of SEC is attributable to SEA and vice versa.

8. On information and belief, Samsung maintains regular and established places of business and does extensive business in Texas and in the Eastern District of Texas, *inter alia*, at its facilities at 6625 Excellence Way, Plano, TX 75023; 6105 Tennyson Pkwy, Plano, TX 75024; and 12100 Samsung Blvd, Austin, TX 78754. Samsung's Collin County and Travis County properties were appraised and taxed by their respective appraisal districts in 2024 at a combined value of nearly $1.1 Billion. Samsung Electronics America's Plano office is referred to as its "Mobile hub" for its smartphone product line. On information and belief, other divisions, including Networks, Mobile

Petitioner Samsung Ex-1033, 0003

Marketing, Computing and Wearables, and Product Management, are located in the Plano facilities in this District. *See* https://web.archive.org/web/20221022110630/https://www.themuse.com/profiles/samsungelectronicsamerica/location/plano. (attached as Exhibit H). Samsung touts that it has "deep ties to Texas," having spent over twenty-five years "working and investing in the state." https://news.samsung.com/us/new-frisco-tx-samsung-experience-store-open-galaxy/ (Exhibit I). Moreover, this venue is familiar to Samsung, which has litigated over 195 federal district court cases in the Eastern District of Texas over the past five years.

9. By registering to conduct business in Texas and by having facilities where it regularly conducts business in this District, Samsung has a permanent and continuous presence in Texas and a regular and established place of business in the Eastern District of Texas. Samsung's Plano facility—a 216,000 square foot building that includes its Mobile, Mobile R&D and Engineering divisions—was opened in 2018 as part of its Plano Legacy Central campus. *See* https://news.samsung.com/us/samsung-electronics-america-open-flagship-north-texas-campus/. (attached as Exhibit J).

10. On information and belief, in 2018-2019, Samsung relocated its existing North Texas-based teams from Richardson and Plano facilities to the new North Texas Campus in Plano, which originally had over 200,000 square feet of space. In a 2018 press release announcing the move, Samsung stated that it was "[l]ong committed to the North Texas community" and its "move to Plano further demonstrates the company's dedication to Texas and being an invested corporate citizen." Tim Baxter, President and CEO of "Samsung Electronics North America" explained that the move "not only provides [Samsung] with an opportunity to create an improved workplace experience for our Texas-based employees, but truly showcases our continued investment in our Texas roots." https://news.samsung.com/us/samsung-electronics-america-open-flagship-north-

texas-campus/ (Exhibit J). As of 2018, SEA's "second biggest employee population in the U.S. across multiple divisions – Customer Care, Mobile, Mobile R&D and Engineering" was housed in North Texas, with over 1,000 employees being relocated to the North Texas Campus from the preexisting facilities in Richardson and Plano. *See id.*

11. Upon information and belief, Samsung continues to house major customer care, mobile, mobile R&D, and engineering teams at its North Texas Campus, which has repeatedly grown in size, scope, and employee population since it opened. For instance, Samsung expanded its North Texas Campus by another 75,000 square feet in 2020 and 60,000 square feet in 2021. In 2023 Samsung opened the Samsung Networks Innovation Center at its North Texas Campus. Samsung touts this new executive briefing center as providing "an interactive and collaborative space for Samsung's customers and partners" at which Samsung "showcases the company's latest network offerings and educates visitors on a wide range of advanced network technologies" and provides use case demos of "Samsung's advanced 5G network solutions and their role in supporting next-generation applications and services." *See* https://www.samsung.com/global/business/networks/insights/blog/0613-samsung-networks-innovation-center-opens-its-doors-offering-a-close-look-at-advanced-network-connectivity/ (Exhibit K).

12. Upon information and belief, Samsung employees have worked on research, development, and testing of the Accused Products in this District, including at Samsung's North Texas Campus. Samsung's U.S. Mobile eXperience ("MX") business unit (previously known as the Mobile Communications business)—which works on the mobile phone and tablet Accused Products—is headquartered in Plano. *See* https://news.samsung.com/us/new-frisco-tx-samsung-experience-store-open-galaxy/ (Exhibit I).

13. Upon information and belief, members of the MX business unit based in Plano have worked on the Accused Products, including (i) Dave Das, SEA's Executive Vice President, MX Business, who is based in Plano and "responsible for driving revenue, market share, and profit growth for Carrier and National Retail Sales, Mobile Products and Services, Integrated Marketing, Mobile Strategy, Mobile B2B, Mobile Computing & Wearables and Mobile Production Center teams in the U.S. market," (ii) Vinay Mahendra, a Director of Engineering Networks Business based in Dallas, and (iii) O. Terry Joseph, a 5G systems engineer and senior manager based in Plano. https://news.samsung.com/us/about/executive-bios/#Dave%20Das (Exhibit L).

14. Samsung's North Texas Campus also is strategically located near several semiconductor manufacturing plants in Austin, TX, including an NXP Semiconductors plant. Samsung partners with NXP Semiconductors to manufacture chipsets used in Samsung's eSIM and 5G devices, including an NXP's SN110U eUICC chipset. Upon information and belief NXP chipsets used in the Accused Devices are manufactured in NXP's Austin plant. *See* https://www.globenewswire.com/news-release/2020/08/11/2076609/0/en/NXP-Secure-UWB-deployed-in-Samsung-Galaxy-Note20-Ultra-Bringing-the-First-UWB-Enabled-Android-Device-to-Market.html (Exhibit M).

JURISDICTION

15. This is an action arising under the patent laws of the United States, 35 U.S.C. §§ 1, *et seq*. Accordingly, this Court has subject matter jurisdiction pursuant to 28 U.S.C. §§ 1331 and 1338(a).

16. This Court has personal jurisdiction over Samsung due, *inter alia*, to its continuous presence in, and systematic contact with, this judicial district, its registration in Texas, and its domicile in this judicial district. Samsung is subject to this Court's jurisdiction pursuant to due process and/or the Texas Long Arm Statute due at least to its substantial business in this State and

judicial district, including at least part of its past infringing activities, regularly doing or soliciting business at its Plano and Austin facilities, and engaging in persistent conduct and/or deriving substantial revenue from goods and services provided to customers in the State of Texas, including in the Eastern District of Texas. Samsung directly and/or through subsidiaries or intermediaries (including distributors, retailers, and others), has committed and continues to commit acts of infringement in this judicial district by, among other things, making, using, importing, offering for sale, and/or selling products and/or services that infringe the Asserted Patents.

VENUE

17. Venue is proper in this judicial district pursuant to 28 U.S.C. §§1391(b), (c), (d) and 1400(b) because SEA has a permanent and continuous presence in, has committed acts of infringement in, and maintains a regular and established place of business in this district, *e.g.* as explained above in paragraphs 8-14. SEA holds itself out as maintaining a place of business in this district and conditions employment on residing in this district. Upon information and belief, SEA has committed acts of direct and indirect infringement in this judicial district, including using and purposefully transacting business involving the Accused Products in this judicial district such as by sales to one or more customers in the State of Texas, including in the Eastern District of Texas, and maintaining a regular and established place of business in this judicial district, as set forth above.

18. Venue is proper in this District as to SEC pursuant to 28 U.S.C. § 1391(c)(3) because venue is proper in any judicial district against a foreign corporation. *See In re HTC Corp.*, 889 F.3d 1349, 1354 (Fed. Cir. 2018).

Petitioner Samsung Ex-1033, 0007

ESIM TECHNOLOGY

19. The ubiquitous SIM (Subscriber Identity Module) card has played a fundamental role in mobile telecommunications for over 25 years by associating a mobile phone or other cellular device with a specific user. SIM cards are small integrated circuits (or "chips") that store a phone number and user information, allowing a mobile phone to connect to a cellular network. SIM cards are housed in various packages that are easily transferrable between mobile devices and provide a secure means for authenticating devices on cellular networks. SIM cards also include the information and instructions used by a device to connect to the cellular network. This information is stored in a network profile and can include frequency information, encryption key, etc. By storing the profile information in the SIM card, switching the card allows a device to easily switch between profiles.

20. Recently, eSIM (Embedded Subscriber Identity Module) technology has been developed that relies on circuitry embedded within a device to provide traditional SIM card functions, eliminating the need for a removable physical SIM card and for the corresponding space within the mobile phone used to house the SIM card. The eSIM functions as a digital SIM card storing network profiles and allowing users to connect to cellular networks. eSIMs also eliminate the need for users to purchase a SIM card from a vendor or physically handle a SIM card when changing carriers or data plans.

21. The change from SIM cards to eSIM technology provides numerous benefits for all participants in mobile networks. **For all cellular participants**, eSIM provides an equivalent level of security as the removable SIM card. This is vital because it is the subscription credentials stored on the SIM card that enable secure and private access to mobile networks. **For the mobile device end user**, eSIM enables simplified management of subscriptions and connections. End users that

Petitioner Samsung Ex-1033, 0008

subscribe to cellular networks no longer have to manage different SIM cards for use with different carriers and/or phones. **For business organizations**, eSIM enables remote management of subscriptions. This is a significant benefit where devices are not managed by the end user or are not readily accessible (for example due to the large size of a business and/or the remote location of the cellular devices). **For distributors**, simplified logistics are possible, and customization for specific operators or regions may be reduced. **Cellular operators** can more readily expand their businesses into emerging markets, for example, for use in automotive, wearables and consumer electronics. SIM card distribution costs are eliminated, and eSIMs enable new distribution models for devices and for marketing of subscription plans. **Device manufacturers**, can exploit the reduced space within their products to make smaller devices or to include additional computing or memory capabilities. Products can also be made more impervious to environmental factors such as dampness, temperature and vibration as they can be hermetically sealed. Manufacturers can also leverage eSIMs to optimize supply chain processes. *See generally,* eSIM Whitepaper, GSMA (March 2018) (attached as Exhibit U).

22. The Global System for Mobile Communications Association ("GSMA") has defined several global eSIM specifications that have been adopted and implemented by the cellular industry, including by device manufacturers such as Defendants. The GSMA eSIM Solution for Consumer Devices addresses smartphones and other consumer devices where the end-user activates the profile or switches operator. The GSMA eSIM Solution for M2M addresses devices where profiles are managed remotely as part of IOT (Internet of Things) solutions.

23. For example, the Remote SIM Provisioning Technical Specification Version 2.2 ("RSPv22") details Remote SIM Provisioning for consumer devices, which includes: "[t]he eUICC Architecture"; (2) "[t]he interfaces used within the Remote SIM Provisioning

Petitioner Samsung Ex-1033, 0009

Architecture;" and (3) "[t]he security functions used within the Remote SIM Provisioning Architecture." RSPv22 at 7. Mobile devices within the context of remote SIM provisioning include an eUICC, as illustrated below:

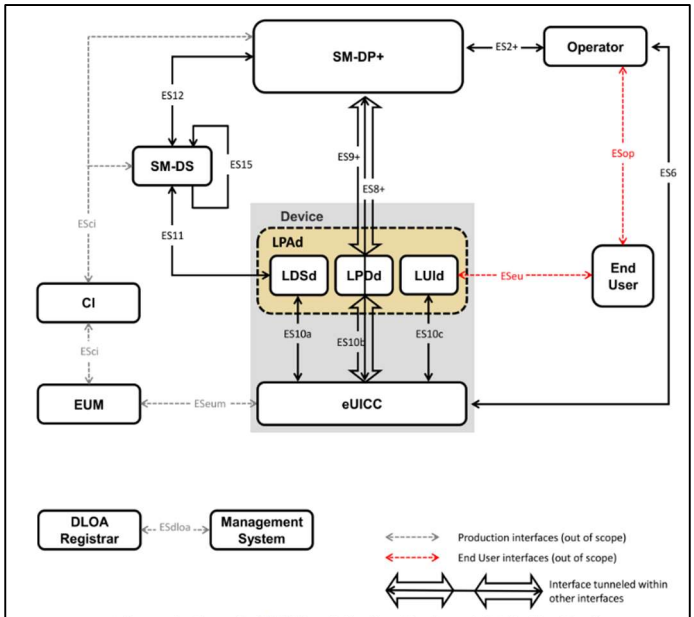

Figure 1: Remote SIM Provisioning System, LPA in the Device

RSPv22 at 19. Such eUICCs store profiles that may be enabled (or disabled) by a mobile network operator, as illustrated below:

Petitioner Samsung Ex-1033, 0010

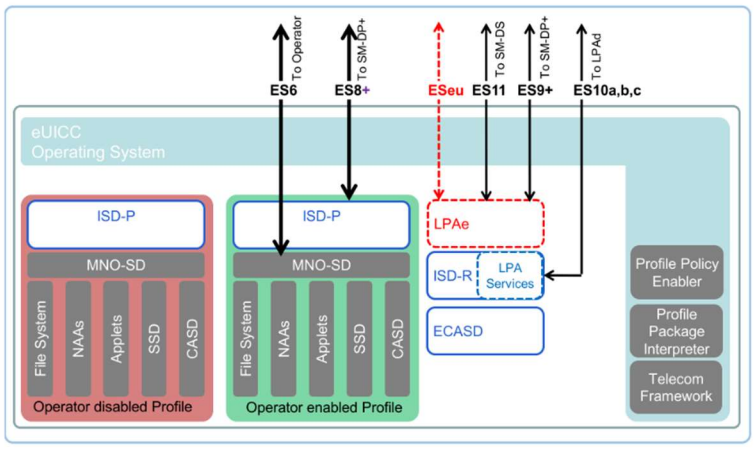

Figure 3: Schematic Representation of the eUICC

RSPv22 at 22. These profiles are packaged and provided to the device by the Subscription Manager Data Preparation Plus ("SM-DP+") service through stages, including generation, protection, binding, and delivery:

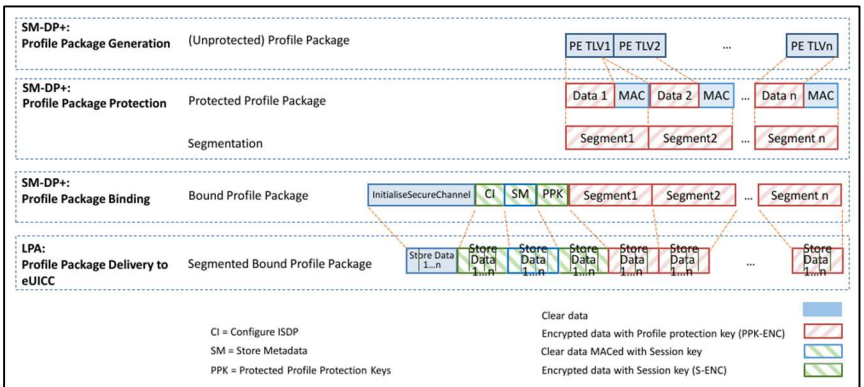

Figure 4: Profile Package stage Description

RSPv22 at 30. First, the mobile device and SM-DP+ must authenticate each other, as illustrated below:

Petitioner Samsung Ex-1033, 0011

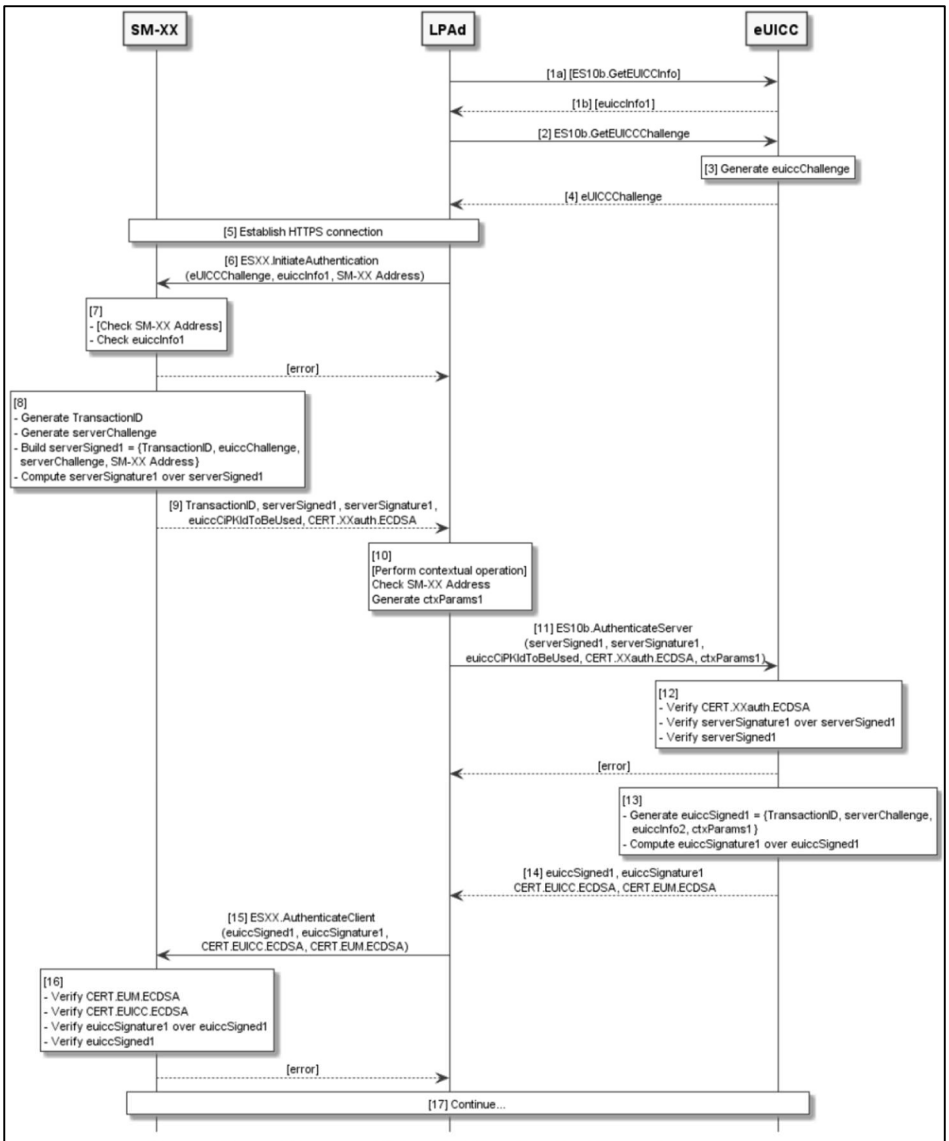

Figure 10: Common Mutual Authentication Procedure

RSPv22 at 55. After proper authentication, the procedure for profile download and installation can be performed, as illustrated below:

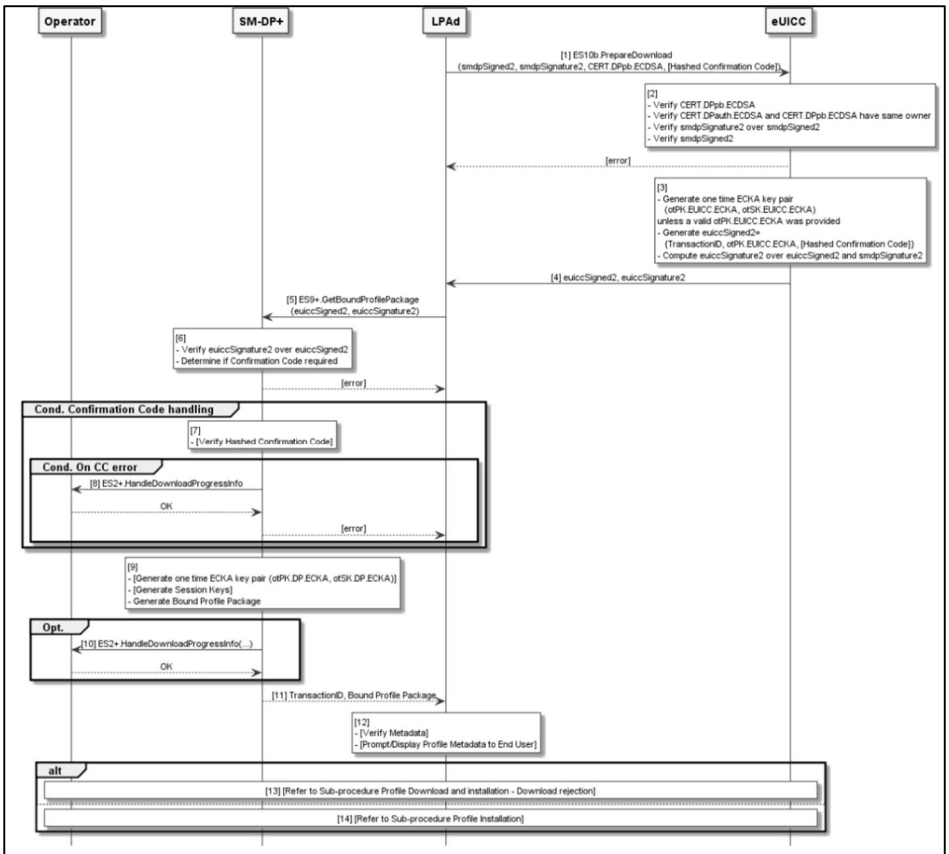

Figure 13: Sub-procedure Profile Download and Installation – Download Confirmation

RSPv22 at 68. The authentication and download procedures rely on public and private key pairs, among other components to ensure the security of the system.

24. Samsung was an early adopter of eSIM technology, integrating embedded SIMs in its smart watches before integrating this feature into its Galaxy smart phones. https://globalesim.app/devices/samsung/ (attached as Exhibit N). Samsung advertises this feature to its customers and explains exactly how to activate and use eSIM technology in its phones. *Id.*

5G TECHNOLOGY

25. 5G technology has been developed as the next generation of mobile network technology, providing numerous benefits to manufacturers and consumers. For example, Ericsson explains that "[u]nlike 5G Non-Standalone networks, 5G Standalone is based exclusively on cloud-native 5G Core and 5G Radio architecture. This flexible and programmable cloud-native service-based

architecture means that service providers can upgrade, create and deploy new services in hours rather than days or weeks, without impacting live services." https://www.ericsson.com/en/5g/5g-sa (attached as Exhibit O). This allows 5G Standalone to take "5G performance to new heights, bringing new capabilities that deliver a more powerful user experience, enhanced network efficiency, and a world of new business opportunities. " *Id.* Verizon explains that "[w]ith higher speeds, increased capacity and reliability, 5G standalone connectivity can provide benefits to businesses, such as:" improved performance, greater flexibility, enablement of more use cases, reduced downtime, and enhanced security. https://www.verizon.com/business/resources/articles/s/what-is-5g-standalone-and-why-does-it-matter/ (attached as Exhibit P).

26. Samsung touts its 5G technology and the benefits it offers. According to Samsung, "[i]t's all possible with 5G." https://www.samsung.com/us/mobile/5g/ (Exhibit Q). Samsung explains that 5G allows its customers to "[g]ame, stream, shop and work all at once with unique Samsung 5G devices that elevate every day, like the new AI-powered Galaxy S25 Series." *Id.* Samsung tells potential customers that they "need Samsung 5G" because it "[t]urns home into a hub," provides a "choice of unique devices," and "[t]he digital world is growing fast." *Id.* Samsung also highlights the benefits of eSIM. For example, Samsung explains that "eSIM provides connection to your carrier's network, however instead of inserting a card, you will activate it with your carrier account information." https://www.samsung.com/us/support/answer/ANS10001619/ (Exhibit R). "It allows you to activate a mobile data plan with your service provider without having a physical SIM." https://www.samsung.com/au/support/mobile-devices/esim-compatibility/ (Exhibit S). According to Samsung, its 5G technology provides "[t]he ability to eliminate the challenges encountered in the past is table stakes for business customers. 5G offers foundational improvements over prior technologies, and with the service-oriented system that spans the core

and radio access network (RAN), network operators can create and roll out new solutions quickly and in a controlled manner to prevent or respond to new privacy and security threats" https://images.samsung.com/is/content/samsung/assets/global/business/networks/insights/brochures/5g-security-improving-user-and-data-protection/Samsung-5G-Security-Brief_FINAL.pdf (Exhibit G).

27. ETSI has defined 5G specifications, including the Security Architecture and Procedures for 5G System, which define the manner in which 5G mobile devices are authenticated on a 5G network. ETSI TS 133 501 V16.3.0 *available at* https://www.etsi.org/deliver/etsi_ts/133500_133599/133501/16.03.00_60/ts_133501v160300p.pdf ("TS 33.501"). The 5G security architecture is illustrated below:

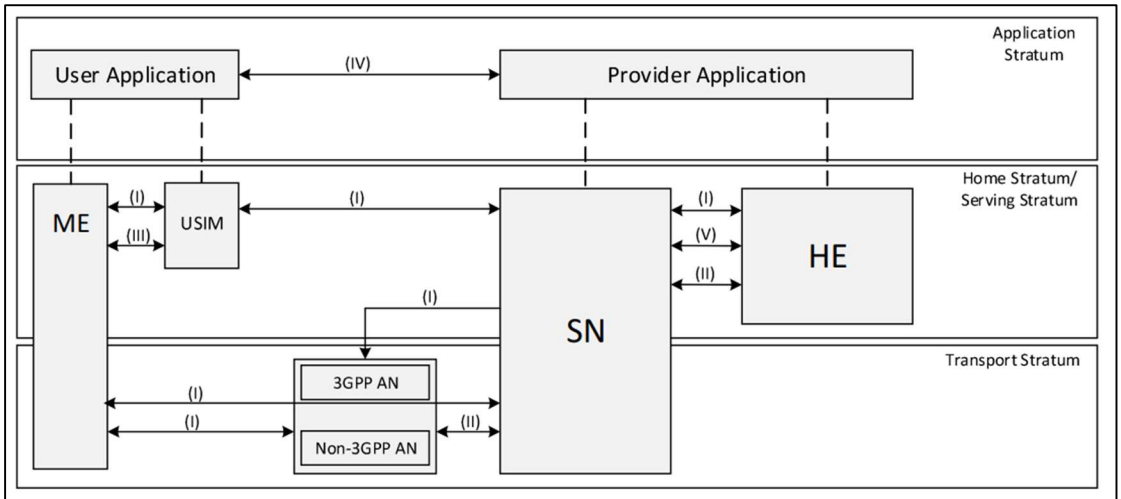

Figure 4-1: Overview of the security architecture

TS 33.501 at 24. The following figure illustrates primary authentication for user equipment ("UE") UE connecting to a 5G network:

Petitioner Samsung Ex-1033, 0015

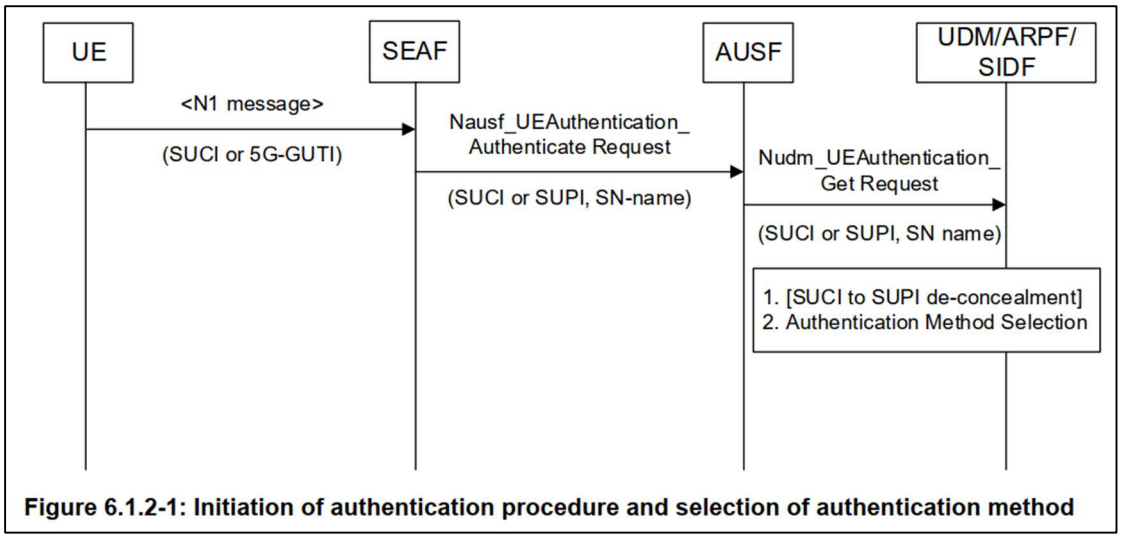

Figure 6.1.2-1: Initiation of authentication procedure and selection of authentication method

TS 33.501 at 39. The authentication procedure for 5G AKA is illustrated below:

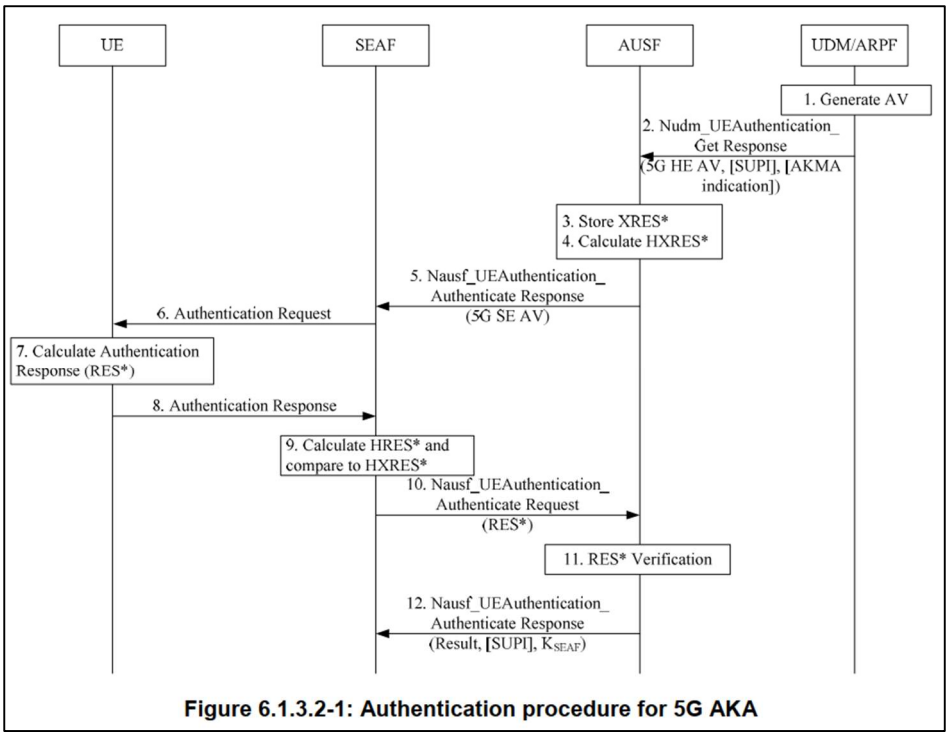

Figure 6.1.3.2-1: Authentication procedure for 5G AKA

TS 33.501 at 43. As part of performing authentication in a 5G network, elliptic curve integrated encryption schemes ("ECIES") may be used, as illustrated below:

Petitioner Samsung Ex-1033, 0016

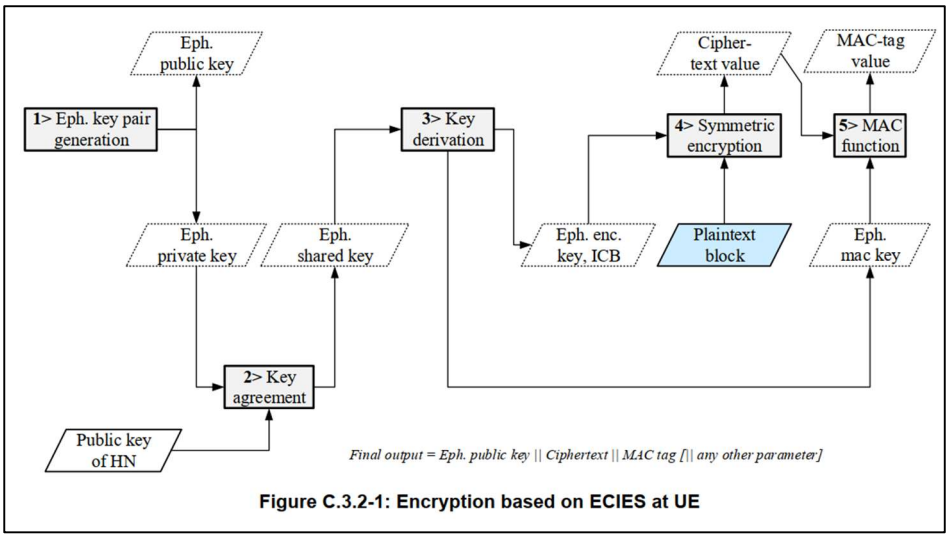

Figure C.3.2-1: Encryption based on ECIES at UE

TS 33.501 at 207. 5G authentication uses public and private encryption keys in a process that generates an encrypted "cipher-text" that includes identification information of the mobile device. This process, from the perspective of a mobile device, is illustrated by Fig. C.3.2-1 above. The identification information then is used in an authentication message exchange with a server to authenticate the mobile device on a carrier's network. The decryption process is illustrated below:

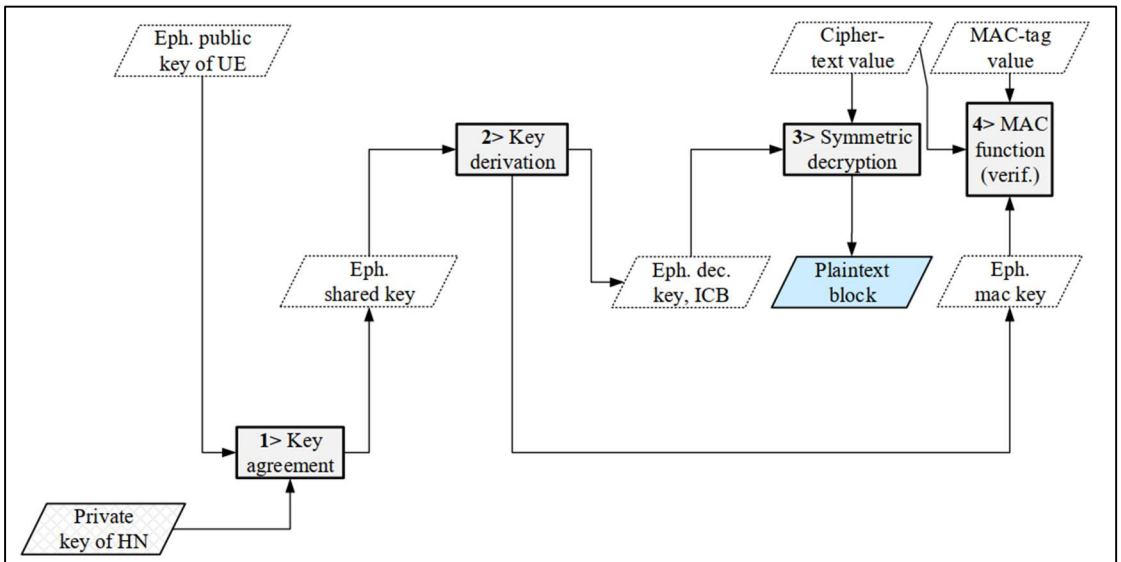

Figure C.3.3-1: Decryption based on ECIES at home network

TS 33.501 at 208. These authentication and encryption procedures/schemes rely on various algorithms and keys to implement the desired level of security within the 5G network.

Petitioner Samsung Ex-1033, 0017

28. One aspect of 5G, is a concept often referred to as "5G Standalone." In a 5G Standalone system, both the "front end," the part of the mobile network connecting with mobile devices, and the "backend," the network components dealing with system management, comply with the 5G specifications. The 5G backend required new methods for authenticating a mobile device on the network, as highlighted above regarding the ETSI 5G security standard. This authentication process occurs frequently during regular usage of a 5G network.

29. Samsung represents and markets to its customers that its mobile products support 5G operation, and thus operate consistent with the applicable 5G standards. https://www.samsung.com/us/mobile/5g/ (Exhibit Q).

NETWORK-1'S PATENTED INVENTIONS

30. The Asserted Patents were invented and developed by John Nix, a long time wireless engineer and prolific inventor. Working to solve problems related to tracking shipping containers and operating mobile networks on container ships at sea, Mr. Nix realized that implementing an eSIM-type system presented numerous issues related to securely and electronically transferring a new set of Managed Network Operator ("MNO") network access credentials (such as an International Mobile Subscriber Identity ("IMSI") and network key K) to a module in a secure and efficient manner. Mr. Nix identified the need for a module to securely obtain network access credentials, and for the obtained credentials in an Embedded Universal Integrated Circuit Card ("eUICC") to be fully compatible with the significant installed and legacy base of networks. Such networks typically use a pre-shared secret key K, where the secret key K serves as the foundation for authentication and ciphering of data for a mobile phone or user equipment, including modules using conventional technology.

Petitioner Samsung Ex-1033, 0018

31. As explained above, eSIMs allow a mobile device to connect to and be authenticated for operation on a mobile network. However, since eSIMs do not rely on a replaceable, physical SIM card, a mobile device and mobile network must be able to configure the eSIM remotely, over a wireless network. This presents several technical challenges, especially related to securely authenticating the mobile device.

32. Mr. Nix also realized that existing mobile network technologies with 2G, 3G, and 4G networks lacked important privacy features. In those networks, the subscriber identity, such as an International Mobile Subscriber Identity ("IMSI"), is transmitted unencrypted during authentication. This was a complex challenge to solve, in part because mobile networks at the time could not select a subscriber's pre-shared secret key (a necessary tool for authentication) without first knowing the subscriber's identity. Securely encrypting the IMSI using conventional technology would have required transmitting other associated identifying information, which would present similar security problems.

33. Network-1's patented inventions solve these problems. As illustrated in the GSMA standard figures earlier, enabling eSIM functionality involves at least the following components: 1) an eUICC located on a mobile device; 2) a Local Profile Assistant located on a device ("LPAd"); and 3) an SM-DP+ server. One aspect of the claimed inventions is the manner in which private keys and public keys belonging to the eUICC and SM-DP+ server are used with symmetric encryption keys to securely encrypt, transmit, and decrypt data for installation on the eUICC allowing the device to be identified and authenticated by SM-DP+ and mobile networks.

34. Network-1's patented inventions also solve the problems of ensuring privacy on mobile networks. Securely encrypting the subscriber identity while fully protecting privacy involves, *inter alia*: (1) storing on a module a public key for the mobile network in addition to a pre-shared secret

key and subscriber identity, (2) deriving an ephemeral public and private key at the module, (3) conducting a key exchange using the public key for the mobile network and the derived ephemeral private key to generate a symmetric ciphering key, (4) encrypting the subscriber identity using the generated symmetric ciphering key, and (5) sending the encrypted subscriber identity and the ephemeral public key to the mobile network. The mobile network then (1) generates the symmetric ciphering key with a private key for the mobile network and the ephemeral public key and (2) decrypts the encrypted subscriber identity. The mobile network also (1) selects authentication information for the decrypted subscriber identity, where the authentication information is based on the pre-shared secret key and (2) conducts an authentication of the module. This process ensures privacy of the subscriber identity.

35. Mr. Nix invented methods and systems for secure and efficient communication using a module to communicate with a server and a mobile operator network. The GSMA and ETSI standards implement Mr. Nix's inventions to solve security issues related to eSIM and 5G authentication, respectively. Mr. Nix's inventions have been extensively cited by leading telecommunication companies across the world in their patent filings. For example, his inventions have been cited by Vodafone, Texas Instruments, Google, Apple, Verizon, Ericsson, Motorola, Huawei, Qualcomm, Amazon, Hewlett Packard Enterprise, Nokia, Thales, Intel, T-Mobile, Cisco, and Samsung.

SAMSUNG'S KNOWLEDGE OF THE PATENTED INVENTIONS

36. Samsung knew about Mr. Nix's patents and patent applications as part of its business competitive intelligence. On information and belief, Samsung monitors patent applications and issuances related to telecommunications. As part of those monitoring activities, Samsung learned of Mr. Nix's inventions. This knowledge is further bolstered by the fact that Samsung cited Mr.

Nix's patent applications in its own patent applications related to various telecommunications technologies, including US2015/0143125, US2015/0163056, US2015/0296379, US2016/0234020, US2017/0373845, US9,319,223, US10,187,206, US2015/0095648, US2016/0164678, US9,118,464, and US9,350,550.

37. In addition and at latest, Samsung was aware of the Asserted Patents as of the date of filing of this Complaint.

SAMSUNG'S USE OF THE PATENTED TECHNOLOGY

38. Samsung makes, uses, sells, and/or offers to sell in the United States, and/or imports into the United States various cellular devices with 5G and/or eSIM capabilities. For example, Samsung makes, uses, and sells phones, tablets, e-readers, smart watches, and other mobile devices that support 5G and/or eSIM. Samsung's devices with 5G and/or eSIM capability include software and hardware on the devices that implement the inventions claimed in the Asserted Patents. On information and belief, Samsung uses and tests the Accused Products at its facilities in the United States.

39. The Accused Products include all Samsung products with support for eSIM and/or 5G operation, including but not limited to the following:

eSIM Products		
Galaxy S25	Galaxy S25+	Galaxy S25 Ultra
Galaxy S24	Galaxy S24+	Galaxy S24 Ultra
Galaxy S23	Galaxy S23+	Galaxy S23 Ultra
Galaxy S22	Galaxy S22+	Galaxy S22 Ultra
Galaxy S21	Galaxy S21+	Galaxy S21 Ultra
Galaxy S20	Galaxy S20+	Galaxy S20 Ultra

Petitioner Samsung Ex-1033, 0021

eSIM Products		
Galaxy Z Fold6	Galaxy Z Flip6	Galaxy Z Fold5
Galaxy Z Flip5	Galaxy Z Fold4	Galaxy Z Flip4
Galaxy Z Fold3	Galaxy Z Flip3	Galaxy Z Fold2
Galaxy Z Flip 5G	Galaxy Z Flip	Galaxy Z Fold
Galaxy A36 5G	Galaxy A56 5G	Galaxy A55 5G
Galaxy XCover 7	Galaxy Note20	Galaxy Note20 Ultra
Galaxy S23FE	Galaxy A56	Galaxy S25 Edge
Galaxy A36	Galaxy A55	Galaxy S24 FE
Galaxy A16 5G	Galaxy S22 Ultra 5G	Galaxy A35
Galaxy S21 Ultra 5G	Galaxy S20 Ultra 5G	Galaxy Z Fold7
Galaxy S22+ 5G	Galaxy S21+ 5G	Galaxy XCover 7 Pro
Galaxy Watch7	Galaxy Z Flip3 5G	Galaxy Z Fold Special
Galaxy Fold	Galaxy Z Flip7	Galaxy Watch Ultra
Galaxy Z Fold3 5G	Galaxy S20 5G	Galaxy S20+ 5G
Galaxy Watch6	Galaxy Z Fold2 5G	Galaxy Watch5
Galaxy Watch5 Pro	Galaxy Watch4	Galaxy Z Flip7 FE
Galaxy Watch4 Classic	Galaxy Watch	Galaxy Z Flip 5G
Galaxy Watch Active2	Galaxy Watch3	Gear S3 classic LTE
Gear S3 frontier LTE	Gear S2 3G	Gear S2 classic 3G
Galaxy Tab A9+	Galaxy Tab A9	Galaxy Tab S10 FE
Galaxy Tab S9 FE	Galaxy Tab S10 Ultra	Galaxy Tab S9
Galaxy Tab S10 FE+	Galaxy Tab S10+	Galaxy Tab S9 FE+

Petitioner Samsung Ex-1033, 0022

eSIM Products		
Galaxy Tab S9 Ultra	Galaxy Tab S9+	Galaxy Tab Active5 Pro
Galaxy Tab Active5	Galaxy Fold 5G	Galaxy S20 FE 2022
Galaxy S21 5G	Galaxy S20 5G UW	Galaxy S22 5G
Galaxy S21FE 5G	Galaxy Book Go 5G	Galaxy Chromebook Go

5G Products		
Galaxy S25	Galaxy S25+	Galaxy S25 Ultra
Galaxy S24	Galaxy S24+	Galaxy S24 Ultra
Galaxy S23	Galaxy S23+	Galaxy S23 Ultra
Galaxy Z Fold6	Galaxy Z Flip6	Galaxy Z Fold5
Galaxy Z Flip5	Galaxy Z Fold4	Galaxy Z Flip4
Galaxy Z Flip 5G	Galaxy A56 5G	Galaxy A55 5G
Galaxy A36 5G	Galaxy A56	Galaxy S25 Edge
Galaxy XCover 7	Galaxy A55	Galaxy S24 FE
Galaxy S23 FE	Galaxy S22 Ultra 5G	Galaxy A35
Galaxy A36	Galaxy S20 Ultra 5G	Galaxy Z Fold7
Galaxy A16 5G	Galaxy S21+ 5G	Galaxy XCover 7 Pro
Galaxy S21 Ultra 5G	Galaxy Z Flip3 5G	Galaxy Z Fold Special
Galaxy S22+ 5G	Galaxy Z Flip7	Galaxy S20+ 5G
Galaxy Z Fold3 5G	Galaxy S20 5G	Galaxy Z Flip7 FE
Galaxy Tab A9+	Galaxy Z Fold2 5G	Galaxy Z Flip 5G
Galaxy Tab S9 FE	Galaxy Tab S10 Ultra	Galaxy Tab S10 FE

Petitioner Samsung Ex-1033, 0023

5G Products		
Galaxy Tab S10 FE+	Galaxy Tab S10+	Galaxy Tab S9
Galaxy Tab S9 Ultra	Galaxy Tab S9+	Galaxy Tab S9 FE+
Galaxy Tab Active5	Galaxy A26	Galaxy Tab Active5 Pro
Galaxy A54	Galaxy F56	Galaxy S24 FE
Galaxy S21FE 5G	Galaxy A35 5G	Galaxy S22 5G
Galaxy M56	Galaxy M35	Galaxy A25
Galaxy A06 5G	Galaxy A73 5G	Galaxy A34
Galaxy M16	Galaxy A33 5G	Galaxy A15 5G
Galaxy F16	Galaxy M15	Galaxy A14 5G
Galaxy F15	Galaxy F55	Galaxy M14
Galaxy M55	Galaxy F06 5G	Galaxy M06
Galaxy M33	Galaxy M34 5G	Galaxy A23 5G
Galaxy F14	Galaxy M55s	Galaxy M54
Galaxy F23	Galaxy M23	Galaxy F54
Galaxy F34	Galaxy XCover6 Pro	Galaxy M53
Galaxy S20 FE 2022	Galaxy M13 5G	Galaxy C55
Galaxy S21 5G	Galaxy S20 FE 5G	Galaxy Note20 Ultra 5G
Galaxy A32 5G	Galaxy A22 5G	Galaxy A52s 5G
Galaxy A24 5G	Galaxy A52 5G	Galaxy Tab S10 5G
Galaxy A13 5G	Galaxy Note20 5G	Galaxy M52 5G
Galaxy A90 5G	Galaxy Note10+ 5G	Galaxy A71 5G
Galaxy Quantum 2	Galaxy Note10 5G	Galaxy A51 5G

Petitioner Samsung Ex-1033, 0024

5G Products		
Galaxy A Quantum	Galaxy M42 5G	Galaxy M32 5G
Galaxy F52 5G	Galaxy Fold 5G	Galaxy F42 5G
Galaxy A51 5G UW	Galaxy Tab S7	Galaxy A71 5G UW
Galaxy Tab S7 FE	Galaxy Tab S8 Ultra	Galaxy Tab S8
Galaxy Tab S8+	Galaxy Tab Active4 Pro	Galaxy Tab S7+
Galaxy Tab S6 5G	Galaxy Book Go 5G	Galaxy Chromebook Go

https://www.samsung.com/us/mobile/5g/ (Exhibit Q); *see generally* https://www.gsmarena.com/search.php3?.

40. On information and belief, the Accused Products all implement eSIM and/or 5G technologies that infringe the Asserted Patents. For example, the GSMA eSIM standards explain that they provide the basis for interoperability between SM-DP+ systems and eSIM-capable devices. RSPv22 at 7. Samsung's products include eSIM hardware, as illustrated in light blue in the teardown figure below:

Petitioner Samsung Ex-1033, 0025

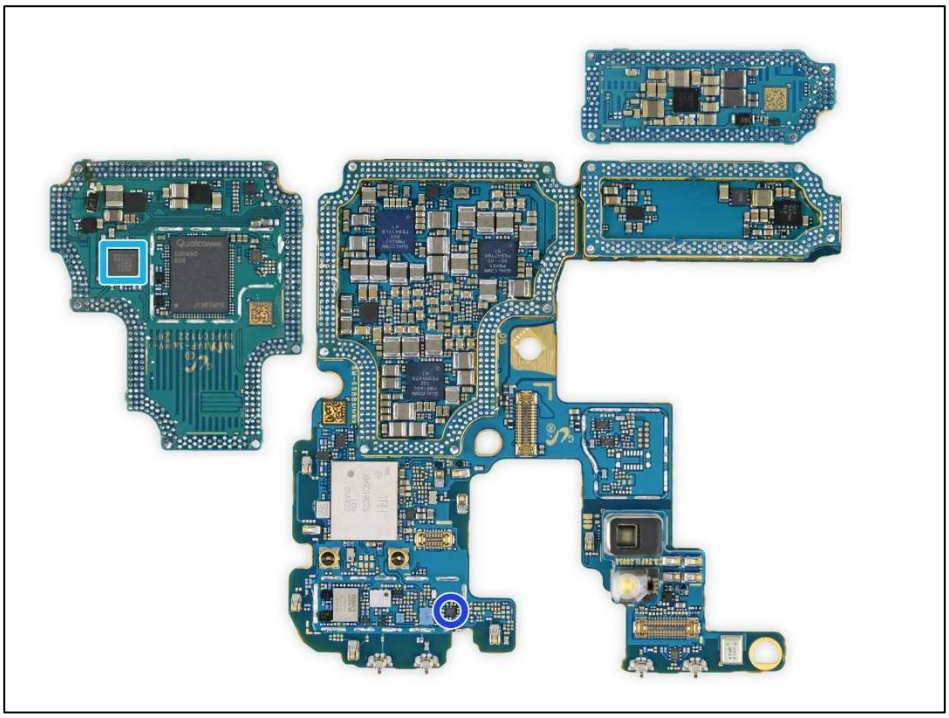

https://www.ifixit.com/Teardown/Samsung+Galaxy+S20+Ultra+Teardown/131607 (Exhibit V) (highlighting the eSIM chip in the Galaxy S20 in light blue). Similarly, the ETSI 5G standards state that they specify, *inter alia*, the security architecture of the 5G system. TS 33.501 at 15. Samsung states that its products include 5G connectivity, which operate consistent with the 5G specifications. *See, e.g.*, https://www.samsung.com/us/smartphones/galaxy-s25-edge/buy/galaxy-s25-edge-512gb-unlocked-sku-sm-s937uzsexaa/ (Exhibit W).

FIRST COUNT

(Infringement of U.S. Patent No. 11,233,780)

41. Network-1 incorporates by reference the allegations set forth in Paragraphs 1-40 of this Complaint as though fully set forth herein.

42. The ’780 Patent, entitled “Embedded universal integrated circuit card supporting two-factor authentication,” was duly and lawfully issued on January 25, 2022. Network-1 is the owner of all right, title, and interest in the ’780 Patent. The ’780 Patent was filed on June 26, 2019 as

Application No. 16/453,682, which is a continuation of Application No. 16/110,804, filed on August 23, 2018, which is a continuation of Application No. 15/928,848, filed on March 22, 2018, which is a continuation of Application No. 14/751,119, filed on June 25, 2015, which is a continuation of Application No. 14/099,329, filed on December 6, 2013. A true and correct copy of the '780 Patent is attached hereto as Exhibit A.

43. The '780 Patent generally relates to improvements regarding provisioning mobile devices with an eSIM and authenticating the device. The '780 Patent discloses an embedded universal circuit card ("eUICC") including one or more processors and a non-transitory computer-readable memory. The memory stores instructions that can be executed by the processor(s). When executed, the instructions cause the processor(s) to (1) generate and send a first message to a subscription manager system, which includes eUICC keys; (2) derive a second set of eUICC keys; (3) storing a subscription manager public key; (4) deriving a profile key; (5) receiving an encrypted profile; (6) receiving a symmetric key; (7) decrypting the profile and its contents; and (8) storing a key K in the eUICC.

44. Samsung directly infringes the '780 Patent under 35 U.S.C. § 271(a) by making, using, selling, and/or offering to sell in the United States, and/or importing into the United States products that directly infringe the '780 Patent, including the above identified Accused Products. The Accused Products infringe at least claim 1 of the '780 Patent by complying with the GSMA standards detailed above regarding eSIM technologies and ETSI standards for authenticating to a mobile network.

45. For example, the Accused Products infringe the '780 Patent by including the claimed hardware and software configured to implement the GSMA standards, and specifically, eUICC functionality. This includes the provisioning, packaging, downloading, verification, and

installation of eUICC profiles as summarized above regarding eSIM Technology. After installation, data from the profile can be used to authenticate the mobile device user to a cellular network.

46. The Accused Products are mobile devices that include an eUICC. *See, e.g.*, RSPv22 § 1. The Accused Products also include one or more processors. *See, e.g.*, Remote SIM Provisioning Technical Specification Version 2.4 ("RSPv24") at 20, 89. The Accused Products also include a non-transitory computer-readable memory operatively connected to the one or more processors, the non-transitory computer-readable memory having stored thereon machine readable instructions that, when executed by the one or more processors cause the one or more processors to perform certain steps. *See, e.g.*, *id.* The instructions, when executed cause the processor(s) to generate the first message. *See, e.g.*, RSPv22 at 13-15, 22-23, 54-55, 57-58, 121-122. The instructions, when executed cause the processor(s) to send the first message. *See, e.g., id.* 55. The instructions, when executed cause the processor(s) to derive eUICC keys using a random number generator and cryptographic algorithms. *See, e.g., id.* at 68; *see also* https://www.gsma.com/solutions-and-impact/technologies/esim/wp-content/uploads/2022/10/SGP.05-V4.0.pdf at 16 (Exhibit X). The instructions, when executed cause the processor(s) to store a subscription manager public key. *See, e.g.*, RSPv22 at 14, 73. The instructions, when executed cause the processor(s) to derive a profile key using a key exchange algorithm. *See, e.g., id.* 40, 160.

47. The instructions, when executed cause the processor(s) to receive an encrypted profile with a ciphertext including a key K encrypted with a symmetric key. *See, e.g., id.* 12, 21, 30, 68, 73. The instructions, when executed cause the processor(s) to receive the symmetric key. *See, e.g., id.* at 30. The instructions, when executed cause the processor(s) to decrypt a portion of the encrypted profile using the profile key. *See, e.g., id.* at 30, 74. The instructions, when executed cause the

Petitioner Samsung Ex-1033, 0028

processor(s) to decrypt a portion of the ciphertext using the symmetric key. *See, e.g., id.* at 30, 163. The instructions, when executed cause the processor(s) to store the key K in the eUICC. *See, e.g., id.* at 22, § 2.4.4.

48. Network-1 is informed and believes, and on that basis alleges, that Samsung indirectly infringes at least claim 1 of the '780 Patent by active inducement in violation of 35 U.S.C. § 271(b), by at least manufacturing, supplying, distributing, selling, and/or offering for sale the Accused Products to its customers with the knowledge and intent that use of those products would constitute direct infringement of the '780 Patent.

49. For example, Samsung advertises to its customers that it sells products that implement the eSIM standards. *See* https://www.samsung.com/us/smartphones/dual-sim-psim-esim-phones/ (Exhibit Y). Samsung also instructs its customers on how to enable eSIM functions on the Accused Products so that they may practice the eSIM standards. As an example, Samsung's website instructs users on how to "sign up for a new eSIM mobile plan or to add a plan from an old device." https://downloadcenter.samsung.com/content/PM/202505/20250529045131673/EN/SAM_S931_S936_S937_S938_EN_FINAL_250513/sim_manager_d1e6482.html (Exhibit Z); *see also* https://www.samsung.com/us/support/answer/ANS10001619/ (Exhibit R); https://www.samsung.com/au/support/mobile-devices/how-to-install-nano-sim-card-and-esim-on-the-galaxy-s22-series/ (Exhibit AA). Once the Accused Products enable eSIM and connect to a mobile network, they will automatically implement the relevant ETSI and/or GSMA standards based upon the hardware and software provided in the Accused Products.

50. Samsung's acts of infringement have caused damage to Network-1, and Network-1 is entitled to recover from Samsung (or any successor entity to Samsung) the damages sustained by Network-1 as a result of Samsung's wrongful acts in an amount subject to proof at trial.

SECOND COUNT

(Infringement of U.S. Patent No. 11,916,893)

51. Network-1 incorporates by reference the allegations set forth in Paragraphs 1-50 of this Complaint as though fully set forth herein.

52. The ’893 Patent, entitled “Embedded universal integrated circuit card supporting two-factor authentication,” was duly and lawfully issued on February 27, 2024. Network-1 is the owner of all right, title, and interest in the ’893 Patent. The ’893 Patent was filed on December 10, 2021 as Application No. 17/547,990, which is a continuation of Application No. 16/453,682, filed on June 26, 2019, which is a continuation of Application No. 16/110,804, filed on August 23, 2018, which is a continuation of Application No. 15/928,848, filed on March 22, 2018, which is a continuation of Application No. 14/751,119, filed on June 25, 2015, which is a continuation of Application No. 14/099,329, filed on December 6, 2013. A true and correct copy of the ’893 Patent is attached hereto as Exhibit B.

53. The ’893 Patent generally relates to improvements regarding provisioning mobile devices with an eSIM and authenticating the device. The ’893 Patent discloses a mobile device including a memory, a random number generator, a radio, and an embedded universal integrated circuit card (eUICC). The memory is configured to store an eUICC identity. The random number generator is configured to generate random numbers for public and private keys. The radio is configured to: (1) transmit an eUICC identity and an eUICC public key; and (2) receive an eUICC profile, a key K, a subscriber identity, and a symmetric key. The eUICC is configured to (1) derive a profile key using an elliptic curve Diffie Hellman key exchange; (2) decrypt the eUICC profile using select keys; and c) generate a response value for authenticating the mobile device using the key K.

Petitioner Samsung Ex-1033, 0030

54. Samsung directly infringes the ’893 Patent under 35 U.S.C. § 271(a) by making, using, selling, and/or offering to sell in the United States, and/or importing into the United States products that directly infringe the ’893 Patent, including the above identified Accused Products. The Accused Products infringe at least claim 1 of the ’893 Patent by complying with the GSMA standards detailed above regarding eSIM technologies and ETSI standards for authenticating to a mobile network.

55. For example, the Accused Products infringe the ’893 Patent by including the claimed hardware and software configured to implement the GSMA standards, and specifically, eUICC functionality. This includes the provisioning, packaging, downloading, verification, and installation of eUICC profiles as summarized above regarding eSIM Technology. After installation, data from the profile can be used to authenticate the mobile device user to a cellular network.

56. The Accused Products are mobile devices and store an eUICC identity. *See, e.g.*, RSPv22 §§ 2.4.2, 4.5.2. The Accused Products also include a random number generator operably connected to a processor connected to a memory for generating eUICC keys. *See, e.g.*, RSPv30 § 2.6.8; RSPv22 Fig. 13. The Accused Products include a radio with one or more corresponding transmit/receive antennas. *E.g.* https://www.ifixit.com/Teardown/Samsung+Galaxy+S20+Ultra+Teardown/131607 (last accessed May 28, 2025) (identifying transceivers) (Exhibit V). The radio is configured to transmit an eUICC identity and public key to a subscription manager. *See, e.g.*, RSPv22 at Fig. 10. The radio is also configured to receive, from the subscription manager, an eUICC profile and a symmetric key. *See, e.g.*, RSPv22 at Figs. 13, 14.

57. The Accused Products include an eUICC associated with an eUICC identity. *See, e.g.*, RSPv22 at Fig. 2. The eUICC is configured to derive a profile key using an elliptic curve Diffie

Hellman (ECDH) key exchange with an eUICC private key and a subscription manager public key. *See, e.g.*, RSPv22 at Fig. 14, Annex G. The eUICC of the Accused Products is also configured to decrypt portions of the eUICC profile (which includes a key K and subscriber identity) using a profile key or a symmetric key. *See, e.g.*, RSPv22 Fig. 4, Fig. 14. The eUICC of the Accused Products is also capable of generating a response value for authentication of the mobile device with the wireless network using the key K. *See, e.g.*, ETSI TS 133.102 v15.1.0 § 6.3.

58. Network-1 is informed and believes, and on that basis alleges, that Samsung indirectly infringes at least claim 1 of the '893 Patent by active inducement in violation of 35 U.S.C. § 271(b), by at least manufacturing, supplying, distributing, selling, and/or offering for sale the Accused Products to its customers with the knowledge and intent that use of those products would constitute direct infringement of the '893 Patent.

59. For example, Samsung advertises to its customers that it sells products that implement the eSIM standards. *See* https://www.samsung.com/us/smartphones/dual-sim-psim-esim-phones/ (Exhibit Y). Samsung also instructs its customers on how to enable eSIM functions on the Accused Products so that they may practice the eSIM standards. As an example, Samsung's website instructs users on how to "sign up for a new eSIM mobile plan or to add a plan from an old device." https://downloadcenter.samsung.com/content/PM/202505/20250529045131673/EN/SAM_S931_S936_S937_S938_EN_FINAL_250513/sim_manager_d1e6482.html (Exhibit Z); *see also* https://www.samsung.com/us/support/answer/ANS10001619/ (Exhibit R); https://www.samsung.com/au/support/mobile-devices/how-to-install-nano-sim-card-and-esim-on-the-galaxy-s22-series/ (Exhibit AA). Once the Accused Products enable eSIM and connect to a mobile network, they will automatically implement the relevant ETSI and/or GSMA standards based upon the hardware and software provided in the Accused Products.

60. Samsung's acts of infringement have caused damage to Network-1, and Network-1 is entitled to recover from Samsung (or any successor entity to Samsung) the damages sustained by Network-1 as a result of Samsung's wrongful acts in an amount subject to proof at trial.

THIRD COUNT

(Infringement of U.S. Patent No. 12,207,094)

61. Network-1 incorporates by reference the allegations set forth in Paragraphs 1-60 of this Complaint as though fully set forth herein.

62. The '094 Patent, entitled "Embedded universal integrated circuit card supporting two-factor authentication," was duly and lawfully issued on January 21, 2025. Network-1 is the owner of all right, title, and interest in the '094 Patent. The '094 Patent was filed on January 18, 2024 as Application No. 18/416,534, which is a continuation of Application No. 17/547,990, filed on Dec. 10, 2021, which is a continuation of Application No. 16/453,682, filed on Jun. 26, 2019, which is a continuation-in-part of Application No. 16/110,804, filed on Aug. 23, 2018, which is a continuation of Application No. 15/928,848, filed on Mar. 22, 2018, which is continuation of Application No. 14/751,119, filed on Jun. 25, 2015, which is a continuation of Application No. 14/099,329, filed on Dec. 6, 2013. A true and correct copy of the '094 Patent is attached hereto as Exhibit C.

63. The '094 Patent generally relates to improved methods for provisioning mobile devices with an eSIM and authenticating the device.

64. Samsung directly infringes the '094 Patent under 35 U.S.C. § 271(a) by making, using, selling, and/or offering to sell in the United States, and/or importing into the United States products that directly infringe the '094 Patent, including the above identified Accused Products. The

Petitioner Samsung Ex-1033, 0033

Accused Products infringe at least claim 1 of the ’094 Patent by complying with the GSMA standards detailed above regarding eSIM technologies.

65. For example, the Accused Products infringe the ’094 Patent by including the claimed hardware and software configured to implement the GSMA standards, and specifically, eUICC functionality. This includes the provisioning, packaging, downloading, verification, and installation of eUICC profiles as summarized above regarding eSIM Technology. After installation, data from the profile can be used to authenticate the mobile device user to a cellular network.

66. As the GSMA standards describe, the Accused Products include the capability to practice claims of the ’094 Patent, including at least claim 1. The Accused Products are configured to generate and send to a subscription manager system a first message comprising an identity of an eUICC, a nonce, and a first digital signature generated using an eUICC private key. *See, e.g.*, RSPv22 at Fig. 10. The Accused Products are configured to derive a second eUICC private key and a corresponding second eUICC public key using a random number generator and cryptographic algorithms. *See, e.g.*, RSPv22 at Fig. 13. The Accused Products also are configured to store a subscription manager public key which corresponds to a subscription manager private key and to derive a profile key using a key exchange algorithm. *See, e.g.*, RSPv22 at Fig. 14. The Accused Products also are configured to receive, from the subscription manager system, an encrypted profile comprising a ciphertext including a key K encrypted with a symmetric key. *See, e.g.*, RSPv22 at Fig. 4, Fig. 13. The Accused Products are configured to receive the symmetric key. *See, e.g.*, RSPv22 at Figs. 4, 14. The Accused Products are configured to decrypt, by the embedded universal integrated circuit card, at least a portion of the encrypted profile using the profile key. *See, e.g.*, RSPv22 at Fig. 4, Fig. 14. The Accused Products are configured to decrypt,

Petitioner Samsung Ex-1033, 0034

by the embedded universal integrated circuit card, at least a portion of the ciphertext using the symmetric key. *See, e.g.*, RSPv22 at Fig. 4, § 5.5.4. Finally, the Accused Products are configured to store at least the key K in the embedded universal integrated circuit card for use in future communications. *See, e.g.*, RSPv22, Fig. 3, § 2.4.4.

67. Network-1 is informed and believes, and on that basis alleges, that Samsung indirectly infringes at least claim 1 of the '094 Patent by active inducement in violation of 35 U.S.C. § 271(b), by at least manufacturing, supplying, distributing, selling, and/or offering for sale the Accused Products to its customers with the knowledge and intent that use of those products would constitute direct infringement of the '094 Patent.

68. For example, Samsung advertises to its customers that it sells products that implement the eSIM standards. *See* https://www.samsung.com/us/smartphones/dual-sim-psim-esim-phones/ (Exhibit Y). Samsung also instructs its customers on how to enable eSIM functions on the Accused Products so that they may practice the eSIM standards. As an example, Samsung's website instructs users on how to "sign up for a new eSIM mobile plan or to add a plan from an old device." https://downloadcenter.samsung.com/content/PM/202505/20250529045131673/EN/SAM_S931_S936_S937_S938_EN_FINAL_250513/sim_manager_d1e6482.html (Exhibit Z); *see also* https://www.samsung.com/us/support/answer/ANS10001619/ (Exhibit R); https://www.samsung.com/au/support/mobile-devices/how-to-install-nano-sim-card-and-esim-on-the-galaxy-s22-series/ (Exhibit AA). Once the Accused Products enable eSIM and connect to a mobile network, they will automatically implement the relevant ETSI and/or GSMA standards based upon the hardware and software provided in the Accused Products.

69. Samsung's acts of infringement have caused damage to Network-1, and Network-1 is entitled to recover from Samsung (or any successor entity to Samsung) the damages sustained by Network-1 as a result of Samsung's wrongful acts in an amount subject to proof at trial.

FOURTH COUNT

(Infringement of U.S. Patent No. 12,166,869)

70. Network-1 incorporates by reference the allegations set forth in Paragraphs 1-69 of this Complaint as though fully set forth herein.

71. The '869 Patent, entitled "Key derivation for a module using an embedded universal integrated circuit card," was duly and lawfully issued on December 10, 2024. Network-1 is the owner of all right, title, and interest in the '869 Patent. The '869 Patent was filed on August 3, 2023 as Application No. 18/229,907, which is a continuation of Application No. 17 /304,922, filed on Jun. 28, 2021, which is a continuation of Application No. 16/879,325, filed on May 20, 2020, which is a continuation of Application No. 16/201,401, filed on Nov. 27, 2018, which is a continuation of Application No. 15/680,758, filed on Aug. 18, 2017, which is a continuation of Application No. 15/130,146, filed on Apr. 15, 2016, which is a continuation of Application No. 14/084,141, filed on Nov. 19, 2013. A true and correct copy of the '869 Patent is attached hereto as Exhibit D.

72. The '869 Patent generally relates to a module containing an embedded universal integrated circuit card ("eUICC") that can receive a profile and set of cryptography algorithms to authenticate the device on a wireless network.

73. Samsung directly infringes the '869 Patent under 35 U.S.C. § 271(a) by making, using, selling, and/or offering to sell in the United States, and/or importing into the United States products that directly infringe the '869 Patent, including the above identified Accused Products. The

Petitioner Samsung Ex-1033, 0036

Accused Products infringe at least claim 1 of the ’869 Patent by complying with the GSMA and ETSI standards detailed above regarding eSIM and 5G technologies.

74. For example, the Accused Products infringe the ’869 Patent by including the claimed hardware and software configured to implement the GSMA standards for eUICC functionality and ETSI standards for 5G authentication. This includes the provisioning, packaging, downloading, verification, and installation of eUICC profiles as summarized above regarding eSIM Technology. After installation, data from the profile can be used to authenticate the mobile device user to a 5G cellular network.

75. For example, the Accused Products are capable of storing, in the eUICC, a first module private key, a corresponding first module public key, and a network public key. *See, e.g.*, RSPv22, Figs. 3, 10, 14, § 2.4.2. The Accused Products are capable of receiving from a server associated with the wireless network, an encrypted profile for the eUICC comprising cryptographic parameters, a module identity, and a key K. *See, e.g.*, RSPv22 at Fig. 4, Fig. 13. The Accused Products also are capable of generating a shared secret key using an elliptic curve Diffie-Hellman (ECDH) key exchange with the first module private key and the network public key. *See, e.g.*, RSPv22 at Fig. 14, Annex G. The Accused Products are capable of decrypting, with the shared secret key, a portion of the encrypted profile for the eUICC. *See, e.g.*, RSPv22 at Fig. 4.

76. The eUICC of the Accused Products is capable of generating a second module public key and a corresponding second module private key. *See, e.g.*, TS 33.501 at Fig. C.3.2-1. The Accused Products are capable of sending, to a second server associated with the wireless network, the second module public key. *See, e.g.*, TS 33.501 at Fig. 6.1.2-1, §§ C.3.4, C.4.3.1. The Accused Products are capable of generating a symmetric key using a second ECDH key exchange with the second module private key and the cryptographic parameters. *See, e.g.*, TS 33.501 at Fig. C.3.2-1.

Petitioner Samsung Ex-1033, 0037

The Accused Products are capable of generating, with the symmetric key, module encrypted data comprising a module identity. *See, e.g.*, TS 33.501 at Fig. C.3.2-1. Finally, the Accused Products are capable of sending, to the second server, the module encrypted data. *See, e.g.*, TS 33.501 at Fig. 6.1.2-1.

77. Network-1 is informed and believes, and on that basis alleges, that Samsung indirectly infringes at least claim 1 of the '869 Patent by active inducement in violation of 35 U.S.C. § 271(b), by at least manufacturing, supplying, distributing, selling, and/or offering for sale the Accused Products to its customers with the knowledge and intent that use of those products would constitute direct infringement of the '869 Patent.

78. For example, Samsung advertises to its customers that it sells products that implement the eSIM standards. *See* https://www.samsung.com/us/smartphones/dual-sim-psim-esim-phones/ (Exhibit Y). Samsung also instructs its customers on how to enable eSIM functions on the Accused Products so that they may practice the eSIM standards. As an example, Samsung's website instructs users on how to "sign up for a new eSIM mobile plan or to add a plan from an old device." https://downloadcenter.samsung.com/content/PM/202505/20250529045131673/EN/SAM_S931_S936_S937_S938_EN_FINAL_250513/sim_manager_d1e6482.html (Exhibit Z); *see also* https://www.samsung.com/us/support/answer/ANS10001619/ (Exhibit R); https://www.samsung.com/au/support/mobile-devices/how-to-install-nano-sim-card-and-esim-on-the-galaxy-s22-series/ (Exhibit AA). Once the Accused Products enable eSIM and connect to a mobile network, they will automatically implement the relevant ETSI and/or GSMA standards based upon the hardware and software provided in the Accused Products.

79. Additionally, Samsung advertises to its customers how to enable 5G capabilities on their devices, which includes support for 5G authentication via compliance with the ETSI standards.

See https://www.samsung.com/us/support/answer/ANS10001946/ (Exhibit BB). And Samsung promotes the value of its 5G-capable devices. *See* https://www.samsung.com/us/mobile/5g/ ("3 reasons you need Samsung 5G") (Exhibit Q).

80. Samsung's acts of infringement have caused damage to Network-1, and Network-1 is entitled to recover from Samsung (or any successor entity to Samsung) the damages sustained by Network-1 as a result of Samsung's wrongful acts in an amount subject to proof at trial.

FIFTH COUNT

(Infringement of U.S. Patent No. 11,606,204)

81. Network-1 incorporates by reference the allegations set forth in Paragraphs 1-80 of this Complaint as though fully set forth herein.

82. The '204 Patent, entitled "Systems and methods for 'machine-to-machine' (M2M) communications between modules, servers, and an application using public key infrastructure (PKI)," was duly and lawfully issued on March 14, 2023. Network-1 is the owner of all right, title, and interest in the '204 Patent. The '204 Patent was filed on January 12, 2022 as Application No. 17/647,812, which is a continuation of Application No. 16/593,561, filed on October 4, 2019, which is a continuation of Application No. 16/036,506, filed on July 16, 2018, which is a continuation of Application No. 15/583,968, filed on May 1, 2017, which is a continuation of Application No. 15/010,905, filed on January 29, 2016, which is a continuation of Application No. 14/005,606, filed on October 16, 2013. A true and correct copy of the '204 Patent is attached hereto as Exhibit E.

83. The '204 Patent relates to device authentication in a wireless network. The device stores a public key, a module identifier, cryptographic algorithms, and a pre-shared secret key. The device derives various keys using the cryptographic algorithms. The device then sends a message to a

server for a wireless network that allows the server to derive a symmetric ciphering key and select a pre-shared secret key. Finally, the device authenticates the wireless network using a message digest with the pre-shared key.

84. Samsung directly infringes the ’204 Patent under 35 U.S.C. § 271(a) by making, using, selling, and/or offering to sell in the United States, and/or importing into the United States products that directly infringe the ’204 Patent, including the above identified Accused Products that include the capability to perform authentication with a 5G cellular network. The Accused Products infringe at least claim 1 of the ’204 Patent by implementing the ETSI standards associated with 5G authentication.

85. For example, the Accused Products infringe the ’204 Patent by including the claimed hardware and software configured to implement methods described by the ETSI standards, and specifically, 5G authentication. These authentication processes are detailed at a high level in the figures discussed above regarding 5G Technology. Using these processes, the Accused Products are configured to derive the claimed keys, use those keys to generate encrypted identifying data, and authenticate to a mobile network as claimed.

86. The Accused Products are capable of storing a server public key, a module identity, cryptographic algorithms, and a pre-shared secret key, wherein the module identity comprises a permanent identifier for the mobile device and the cryptographic algorithms includes a symmetric ciphering algorithm. *See, e.g.*, TS 33.501 at Figs. 6.1.3.1-1, 6.1.3.2-1, 6.12.1 C.3.2-1. The Accused Products are capable of deriving a module private key and a corresponding module public key using the cryptographic algorithms. *See, e.g.*, TS 33.501 at Fig. C.3.2-1. The Accused Products are capable of deriving a symmetric ciphering key using (i) an elliptic curve integrated encryption scheme with the server public key and the module private key and (ii) an American National

Standards Institute standard X-9.63 key derivation function. *See, e.g.*, TS 33.501 at Figs. C.3.2-1, C.3.4. The Accused Products are capable of generating module encrypted data using the symmetric ciphering key and the symmetric ciphering algorithm. *See, e.g.*, TS 33.501 at Fig. C.3.2-1. The Accused Products are configured to send a message to a server associated with the wireless network, the message comprising the module encrypted data and the module public key. *See, e.g.*, TS 33.501 at Figs. 6.1.2-1, C.3.4, C.4.3.1. The server that receives the message is capable of deriving the symmetric ciphering key using at least the module public key. *See, e.g.*, TS 33.501 at Fig. C.3.3-1. The wireless network is capable of selecting the pre-shared secret key for the mobile device using the module identity when generating an authentication vector. *See, e.g.*, TS 33.501 at Fig. 6.1.3.2-1. Finally, the Accused Products are capable of authenticating with the wireless network using a message digest with the pre-shared secret key. *See, e.g.*, TS 33.501 at Fig. 6.1.3.2-1.

87. Network-1 is informed and believes, and on that basis alleges, that Samsung also indirectly infringes at least claim 1 of the ’204 Patent by active inducement in violation of 35 U.S.C. § 271(b), by at least manufacturing, supplying, distributing, selling, and/or offering for sale the Accused Products to its customers with the knowledge and intent that use of those products would constitute direct infringement of the ’204 Patent.

88. For example, Samsung advertises to its customers how to enable 5G capabilities on their devices, which includes support for 5G authentication via compliance with the ETSI standards. *See* https://www.samsung.com/us/support/answer/ANS10001946/ (Exhibit BB). And Samsung promotes the value of its 5G-capable devices. *See* https://www.samsung.com/us/mobile/5g/ (“3 reasons you need Samsung 5G”) (Exhibit Q).

Petitioner Samsung Ex-1033, 0041

89. Samsung's acts of infringement have caused damage to Network-1, and Network-1 is entitled to recover from Samsung (or any successor entity to Samsung) the damages sustained by Network-1 as a result of Samsung's wrongful acts in an amount subject to proof at trial.

SIXTH COUNT

(Infringement of U.S. Patent No. 11,973,864)

90. Network-1 incorporates by reference the allegations set forth in Paragraphs 1-89 of this Complaint as though fully set forth herein.

91. The '864 Patent, entitled "Systems and methods for "machine-to-machine" (M2M) communications between modules, servers, and an application using public key infrastructure (PKI)," was duly and lawfully issued on April 30, 2024. Network-1 is the owner of all right, title, and interest in the '864 Patent. The '864 Patent was filed on February 20, 2023 as Application No. 18/111,669, which is a continuation of Application No. 17/647,812, filed on Jan. 12, 2022, which is a continuation of Application No. 16/593,561, filed on Oct. 4, 2019, which is a continuation of Application No. 16/036,506, filed on Jul. 16, 2018, which is a continuation of Application No. 15/583,968, filed on May 1, 2017, which is a continuation of Application No. 15/010,905, filed on Jan. 29, 2016, which is a continuation of Application No. 14/055,606, filed on Oct. 16, 2013. A true and correct copy of the '864 Patent is attached hereto as Exhibit F.

92. The '864 Patent relates to methods to authenticate a device in a wireless network.

93. Samsung directly infringes the '864 Patent under 35 U.S.C. § 271(a) by making, using, selling, and/or offering to sell in the United States, and/or importing into the United States products that directly infringe the '864 Patent, including the above identified Accused Products. The Accused Products infringe at least claim 1 of the '864 Patent by implementing the ETSI standards associated with 5G authentication.

94. For example, the Accused Products infringe the ’864 Patent by including the claimed hardware and software configured to implement methods described by the ETSI standards, and specifically, 5G authentication. These authentication processes are detailed at a high level in the figures discussed above regarding 5G Technology. Using these processes, the Accused Products are configured to derive the claimed keys, use those keys to generate encrypted identifying data, and authenticate to a mobile network as claimed.

95. For example, the Accused Products are capable of storing a server public key, a module identity, cryptographic algorithms and a pre-shared secret key, wherein the module identity comprises a permanent identifier for a mobile device and the cryptographic algorithms includes a symmetric ciphering algorithm. *See, e.g.*, TS 33.501 at Figs. 6.1.3.1-1, 6.1.3.2-1, 6.12.1, C.3.2-1. The Accused Products are capable of deriving a module private key and a corresponding module public key associated with the mobile device using the cryptographic algorithms. *See, e.g.*, TS 33.501 at Fig. C.3.2-1. The Accused Products are capable of deriving a symmetric ciphering key using (i) an elliptic curve integrated encryption scheme with the server public key and the module private key and (ii) an American National Standards Institute standard X-9.63 key derivation function. *See, e.g.*, TS 33.501 at Figs. C.3.2-1, C.3.4. The Accused Products are capable of generating module encrypted data using the symmetric ciphering key and the symmetric ciphering algorithm wherein the module encrypted data includes the module identity. *See, e.g.*, TS 33.501 at Fig. C.3.2-1. The Accused Products are capable of sending a message to a server for a wireless network, the message comprising the module encrypted data and the corresponding module public key, wherein the server mutually derives the symmetric ciphering key using at least the module public key, and wherein the wireless network selects the pre-shared secret key for the mobile device using the module identity. *See, e.g.*, TS 33.501 at Fig. 6.1.2-1, Figs. C.3.3-1, C.3.4, C.4.3.1.

Petitioner Samsung Ex-1033, 0043

Finally, the Accused Products are capable of authenticating the mobile device with the wireless network using a message digest with the pre-shared secret key. *See, e.g.*, TS 33.501 at Fig. 6.1.3.2-1.

96. Network-1 is informed and believes, and on that basis alleges, that Samsung indirectly infringes at least claim 1 of the '864 Patent by active inducement in violation of 35 U.S.C. § 271(b), by at least manufacturing, supplying, distributing, selling, and/or offering for sale the Accused Products to its customers with the knowledge and intent that use of those products would constitute direct infringement of the '864 Patent.

97. For example, Samsung advertises to its customers how to enable 5G capabilities on their devices, which includes support for 5G authentication via compliance with the ETSI standards. *See* https://www.samsung.com/us/support/answer/ANS10001946/ (Exhibit BB). And Samsung promotes the value of its 5G-capable devices. *See* https://www.samsung.com/us/mobile/5g/ ("3 reasons you need Samsung 5G") (Exhibit Q).

98. Samsung's acts of infringement have caused damage to Network-1, and Network-1 is entitled to recover from Samsung (or any successor entity to Samsung) the damages sustained by Network-1 as a result of Samsung's wrongful acts in an amount subject to proof at trial.

WILLFULNESS

99. Prior to the filing of this complaint, and certainly by the date of this Complaint, Samsung knew or should have known that it infringed the Asserted Patents.

100. As a company in the wireless electronics space, and more particularly a manufacturer of mobile devices, such as cell phones, Samsung is familiar with the GSMA and ETSI standards and related intellectual property. For example, Samsung knows that various companies contribute to the technical advancement of the technologies that underly 5G and eSIM.

Petitioner Samsung Ex-1033, 0044

Samsung further knows that Network-1's patented inventions were a major contributor to the advancement of 5G and eSIM. For example, Samsung cited patent applications filed by Mr. Nix in its own patent applications related to various telecommunications technologies, including US2015/0143125, US2015/0163056, US2015/0296379, US2016/0234020, US2017/0373845, US9,319,223, US10,187,206, US2015/0095648, US2016/0164678, US9,118,464, and US9,350,550.

101. Samsung has therefore proceeded to infringe the Asserted Patents with full and complete knowledge of their applicability to Samsung's Accused Products without taking a license and without a good faith belief that the patents-in-suit are invalid and not infringed. At minimum, Samsung willfully blinded itself to its infringement of the Asserted Patents; Samsung believed with high probability that its Accused Products infringed but took deliberate action to avoid learning further details of its infringement.

102. Samsung's infringement of the Asserted Patents thus occurs with knowledge of infringement, objective recklessness, and/or willful blindness, and has been and continues to be willful and deliberate. Thus, Samsung's infringement of the patents-in-suit is willful and deliberate, entitling Network-1 to increased damages under 35 U.S.C. § 284 and to attorneys' fees and costs incurred in prosecuting this action under 35 U.S.C. § 285.

PRAYER FOR RELIEF

WHEREFORE, Plaintiff prays for judgment and seeks relief against Samsung as follows:

(a) For judgment that U.S. Patent Nos. U.S. Patent Nos. 11,233,780; 11,916,893; 12,207,094; 12,166,869; 11,606,204; and 11,973,864 have been and continue to be infringed by Samsung;

(b) For an accounting of all damages sustained by Plaintiff as the result of Samsung's acts of infringement;

Petitioner Samsung Ex-1033, 0045

(c) For finding that Samsung's infringement is willful and enhancing damages pursuant to 35 U.S.C. § 284;

(d) For a mandatory future royalty payable on each and every future sale by Samsung of a product that is found to infringe one or more of the Asserted Patents and on all future products that are not colorably different from products found to infringe;

(e) For an award of attorneys' fees pursuant to 35 U.S.C. § 285 or otherwise permitted by law;

(f) For all costs of suit; and

(g) For such other and further compensatory relief as the Court may deem just and proper.

DEMAND FOR JURY TRIAL

Pursuant to Rule 38(b) of the Federal Rules of Civil Procedure and Local Rule CV-38, Plaintiff demands a trial by jury of this action.

Petitioner Samsung Ex-1033, 0046

Dated: June 27, 2025

Respectfully submitted,

/s/ *Demetrios Anaipakos*

Demetrios Anaipakos
Texas Bar No. 00793258
danaipakos@aatriallaw.com
Amir H. Alavi
Texas Bar No. 00793239
aalavi@aatriallaw.com
Michael McBride
Texas Bar No. 24065700
mmcbride@aatriallaw.com
Steven Jugle
Texas Bar No. 24083280
sjugle@aatriallaw.com
C. Ryan Pinckney
Texas Bar No. 24067819
rpinckney@aatriallaw.com
Connie Flores Jones
Texas Bar No. 00793736
cfloresjones@aatriallaw.com
ALAVI & ANAIPAKOS PLLC
609 Main Street, Suite 3200
Houston, Texas 77002
Telephone: (713) 751-2362
Facsimile: (713) 751-2341

Michael F. Heim
Texas State Bar No. 09380923
Eric J. Enger
Texas State Bar No. 24045833
R. Allan Bullwinkel
Texas State Bar No. 240864327
William B. Collier, Jr.
Texas State Bar No. 24097519
HEIM, PAYNE & CHORUSH, LLP
609 Main St. Suite 3200
Houston, Texas 77002
Telephone: (713) 221-2000
Facsimile: (713) 221-2021
mheim@hpcllp.com
eenger@hpcllp.com
abullwinkel@hpcllp.com
wcollier@hpcllp.com

Andrea L. Fair
State Bar No. 24078488
andrea@millerfairhenry.com
Claire A. Henry
State Bar No. 24053063
claire@millerfairhenry.com
MILLER FAIR HENRY PLLC
1507 Bill Owens Parkway
Longview, Texas 75604
(903) 757-6400 (telephone)

ATTORNEYS FOR NETWORK-1 TECHNOLOGIES, INC.

Petitioner Samsung Ex-1033, 0048