US 20100135491A1

(19) United States

(12) Patent Application Publication

(10) Pub. No.: US 2010/0135491 A1

(43) Pub. Date: Jun. 3, 2010

Bhuyan

(54) **AUTHENTICATION METHOD**

(76) Inventor: **Dhiraj Bhuyan**, London (GB)

Correspondence Address:
NIXON & VANDERHYE, PC
901 NORTH GLEBE ROAD, 11TH FLOOR
ARLINGTON, VA 22203 (US)

(21) Appl. No.: **12/593,387**

(22) PCT Filed: **Jan. 22, 2008**

(86) PCT No.: **PCT/GB2008/000219**

§ 371 (c)(1),
(2), (4) Date: **Sep. 28, 2009**

(30) **Foreign Application Priority Data**

Mar. 27, 2007 (EP) 07251308.8

Publication Classification

(51) **Int. Cl.**
H04L 9/32 (2006.01)
H04K 1/00 (2006.01)
H04L 9/00 (2006.01)

(52) **U.S. Cl.** **380/247**; 380/44; 713/168; 380/270

(57) **ABSTRACT**

A method of providing authentication of a mobile device in a telecommunications network comprising the steps of: providing a user defined first password to an authentication server in the communications network; generating a set of security parameters by an authentication server and provisioning the security parameters to a mobile device, wherein the security parameters are stored at the mobile device and wherein the security parameters comprises an encryption key; authenticating the mobile device by challenging the integrity of the encryption key stored at the mobile device and verifying a first response generated by the mobile device in response to the challenge, wherein verifying comprises comparing by the network whether the first response matches a second response, wherein the first response is based on the encryption key stored at the mobile device and a second password input by the user, and the second response is generated by the network and is based on the encryption key generated by the authentication server and the user defined first password.

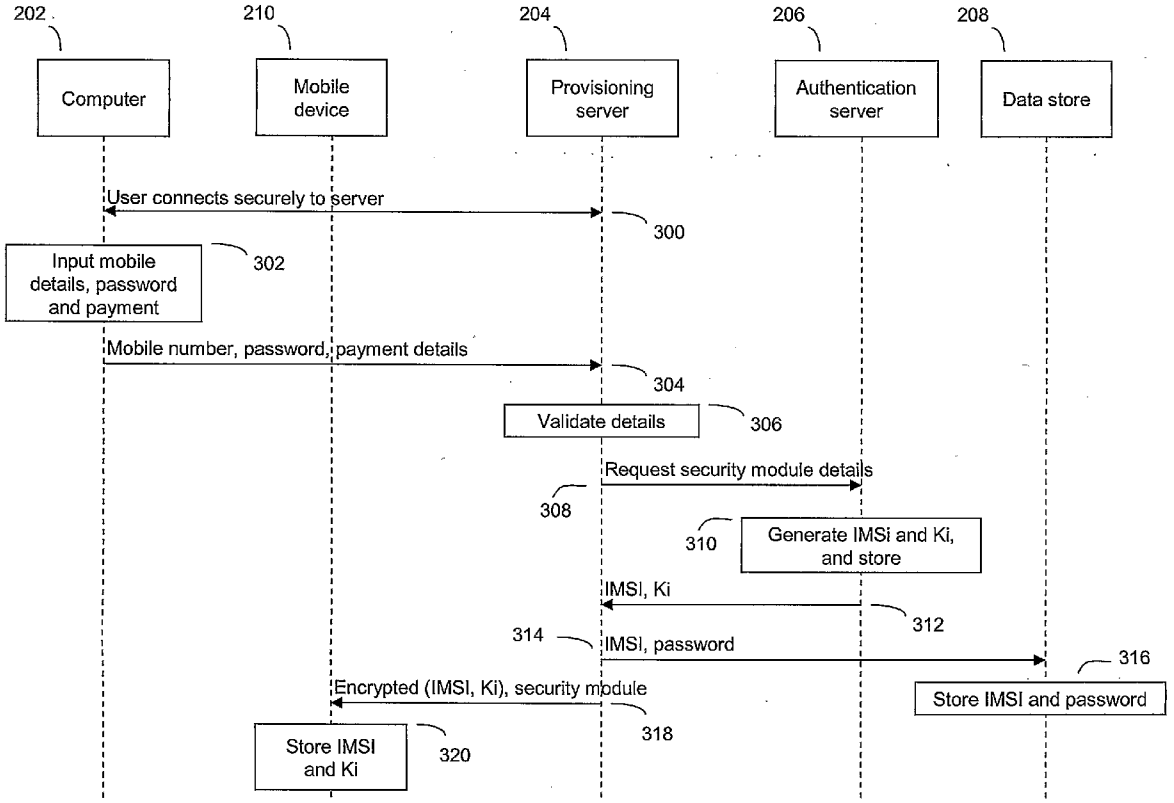

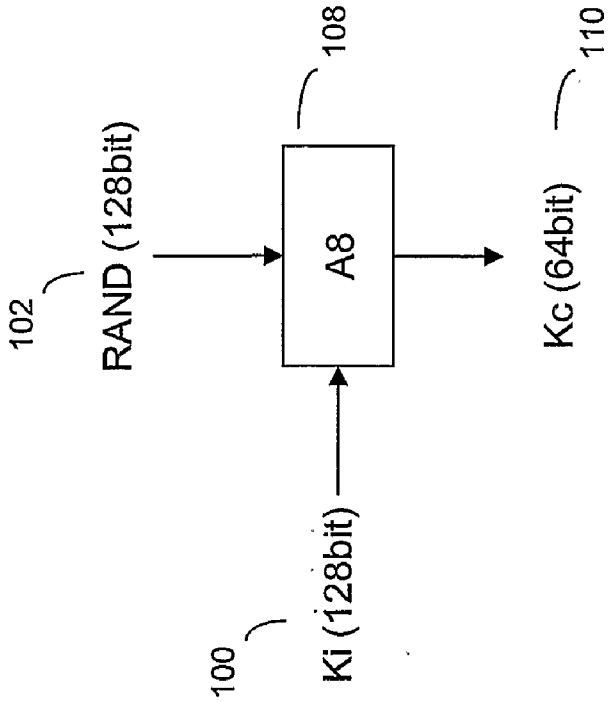

Figure 1b

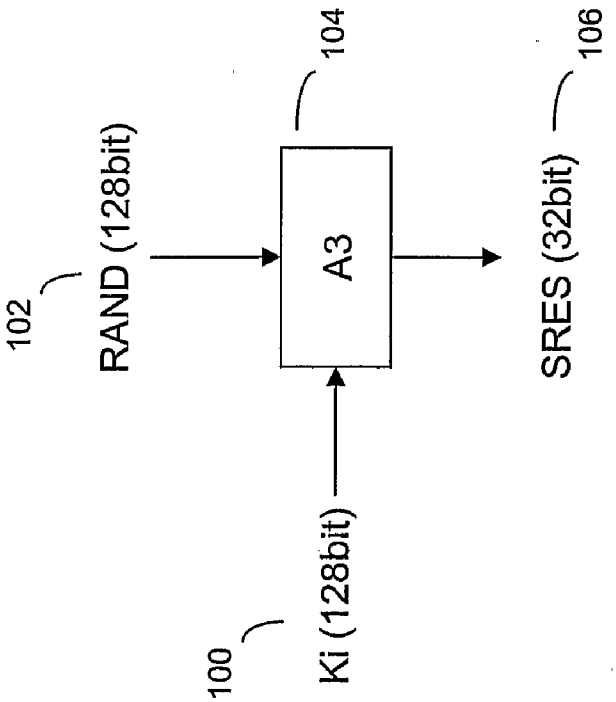

Figure 1a

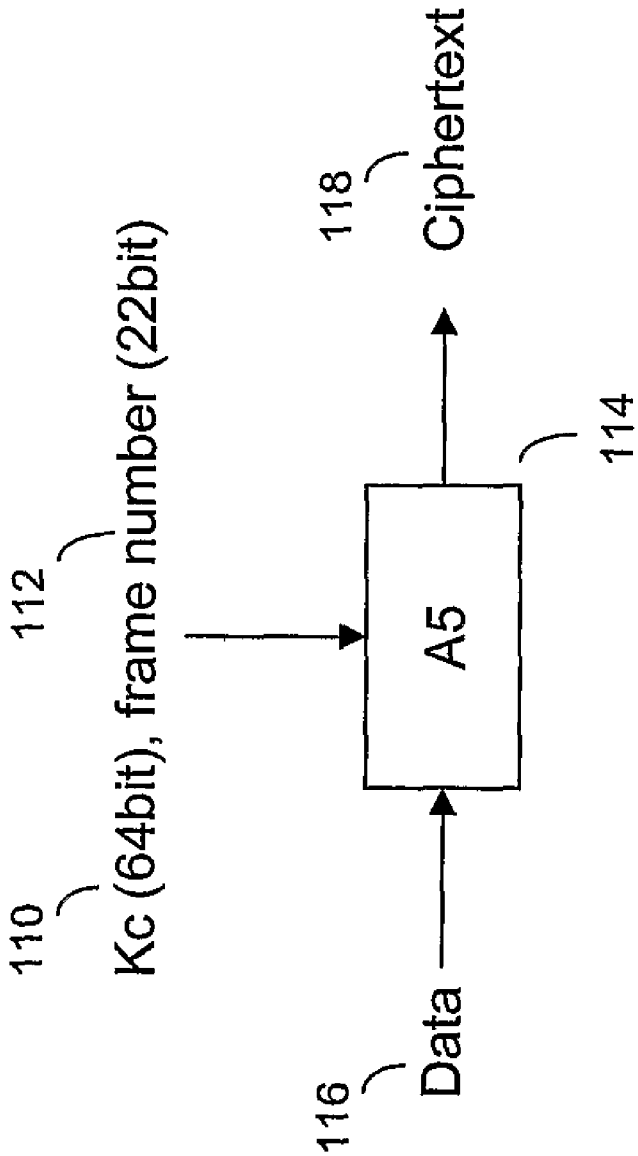
110
Kc (64bit), frame number (22bit)
112
116
Data
A5
114
118
Ciphertext

Figure 1c

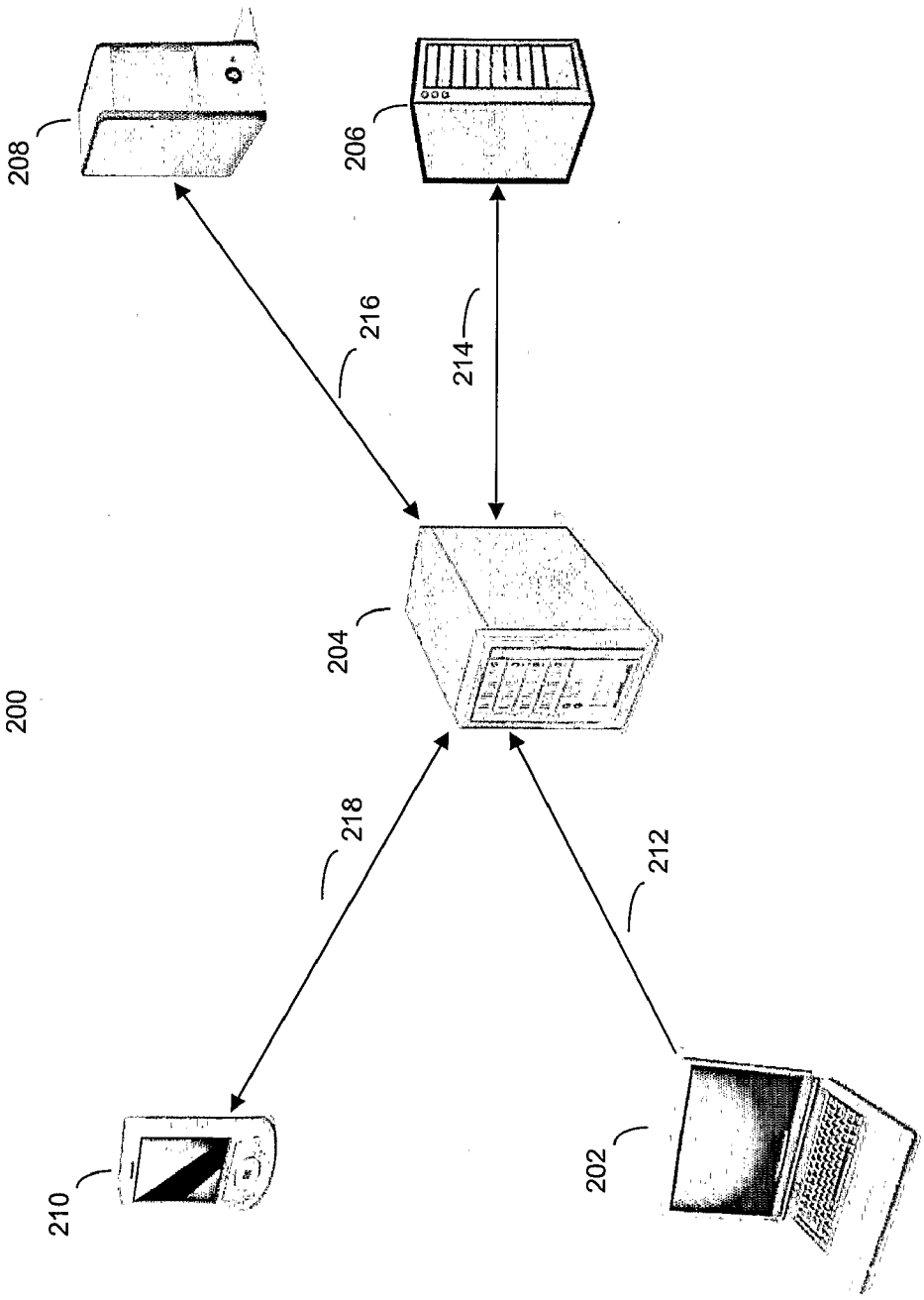

Figure 2

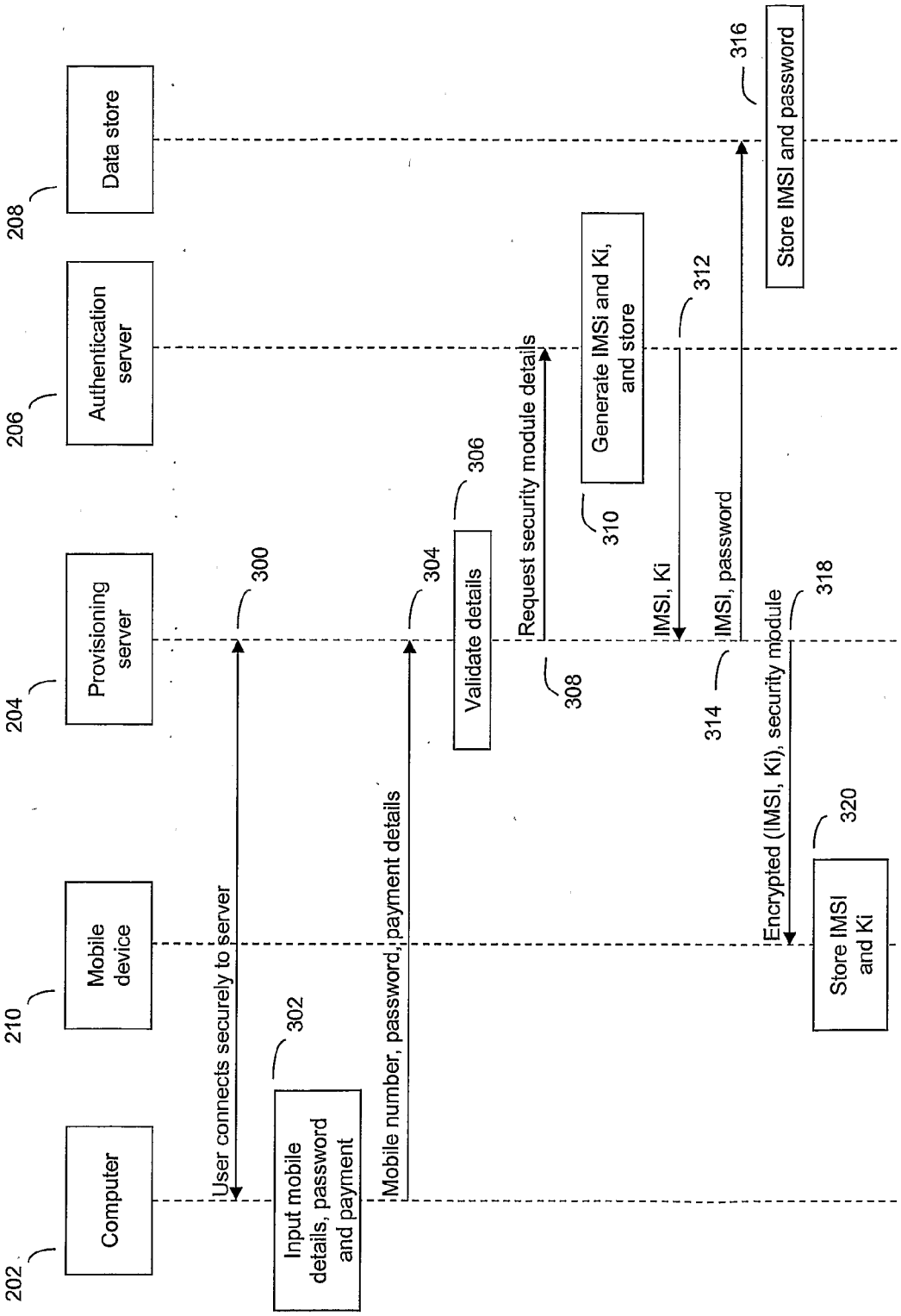
202
Computer
210
Mobile device
204
Provisioning server
206
Authentication server
208
Data store
User connects securely to server
300
Input mobile details, password and payment
302
Mobile number, password, payment details
304
Validate details
306
Request security module details
308
Generate IMSi and Ki, and store
310
IMSI, Ki
312
IMSI, password
314
Store IMSI and password
316
Encrypted (IMSI, Ki), security module
318
Store IMSI and Ki
320

Figure 3

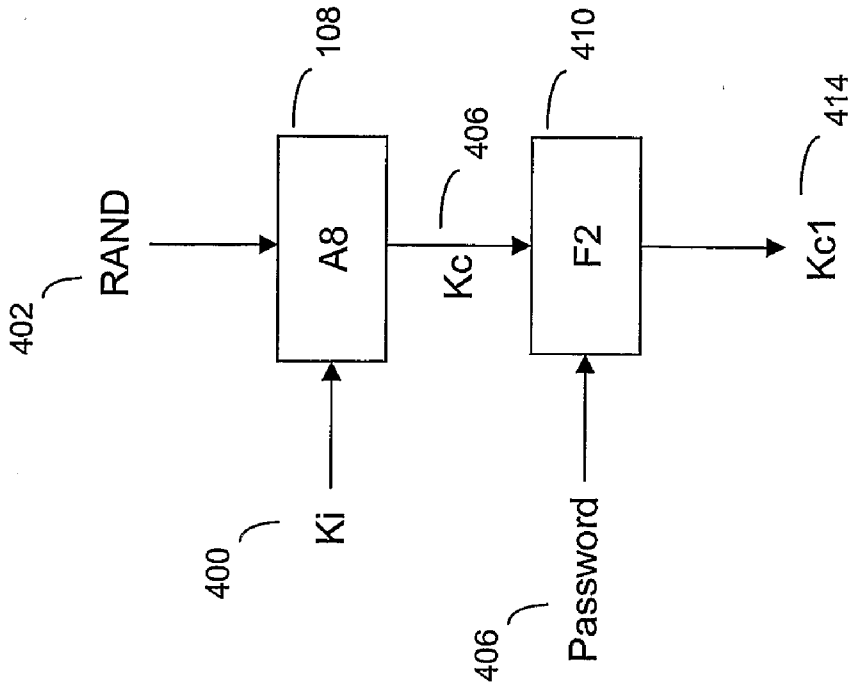

Figure 4b

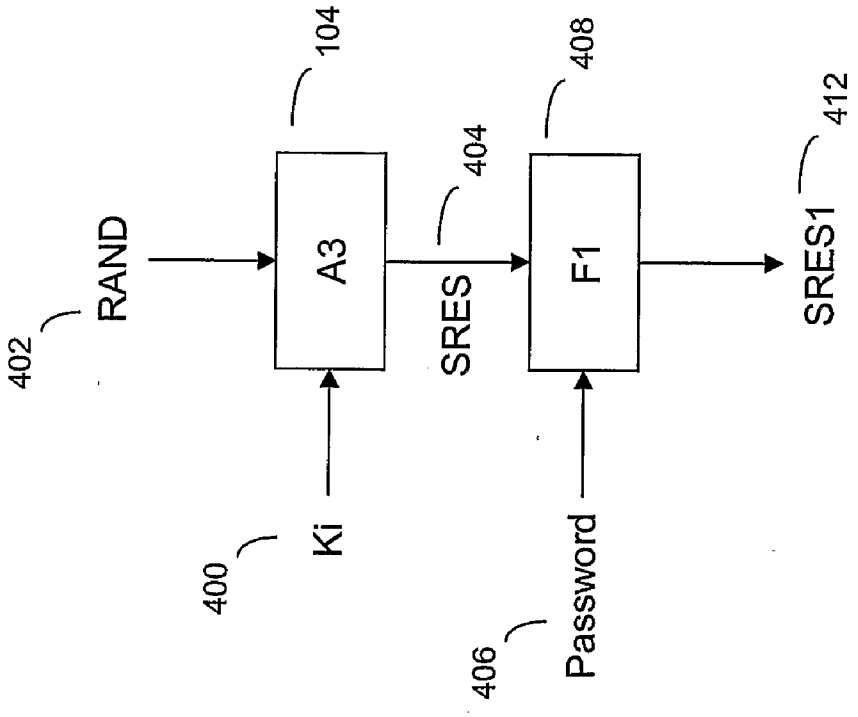

Figure 4a

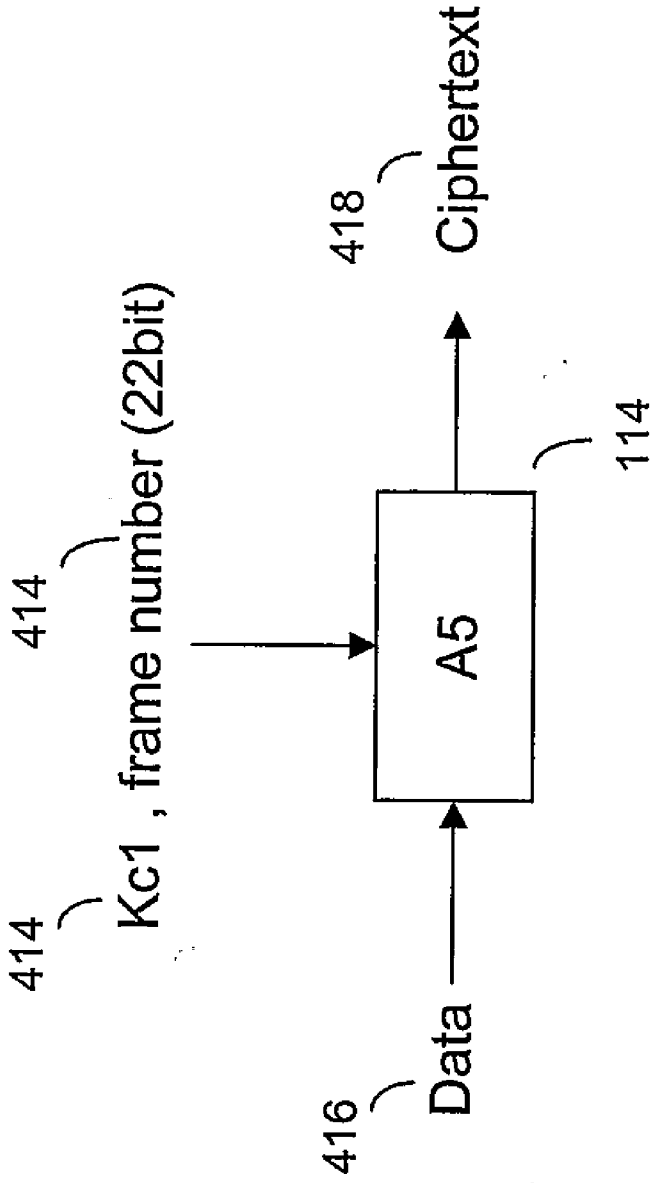
414
Kc1 , frame number (22bit)
414
416
Data
A5
114
418
Ciphertext

Figure 4c

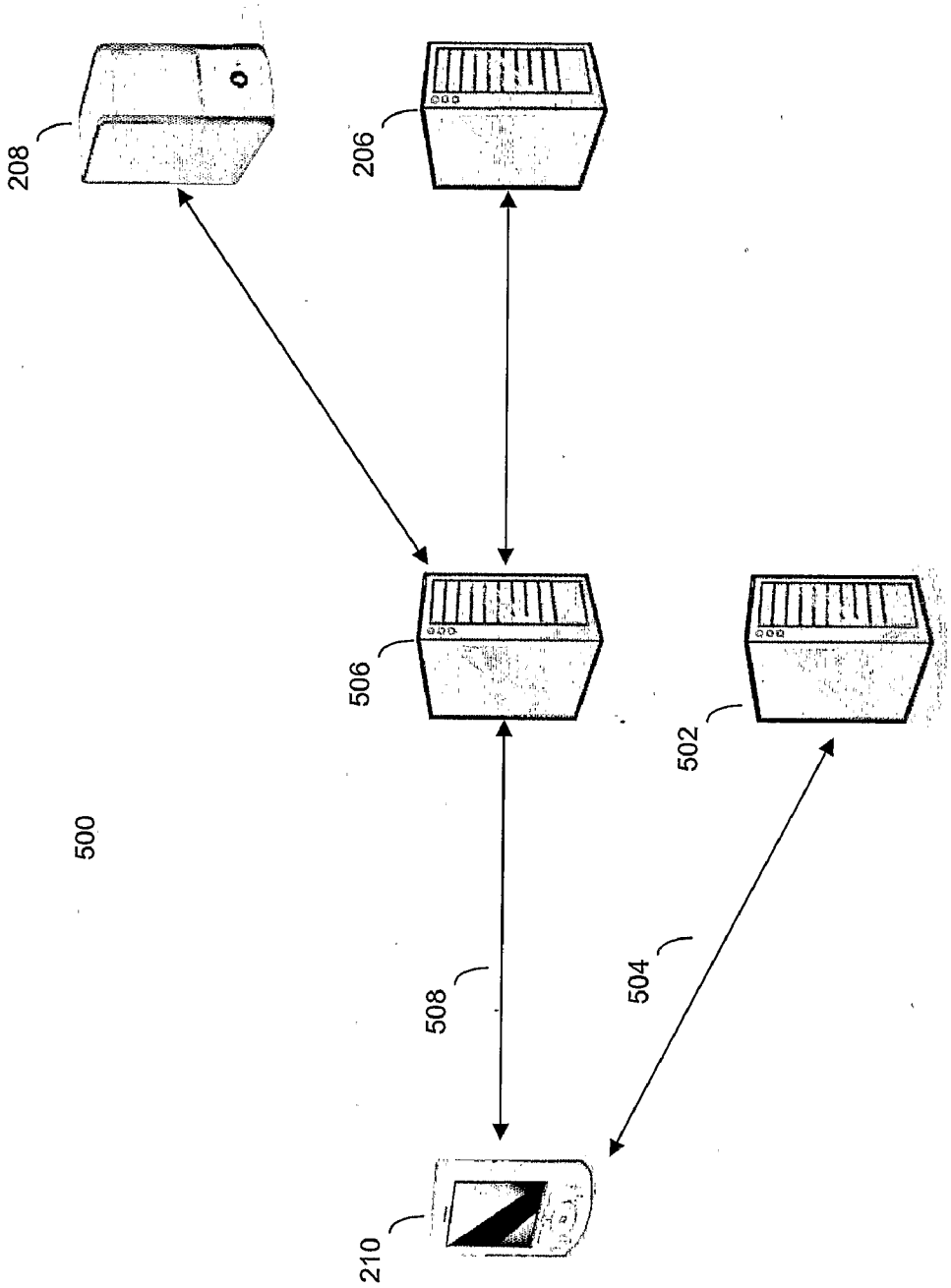

Figure 5

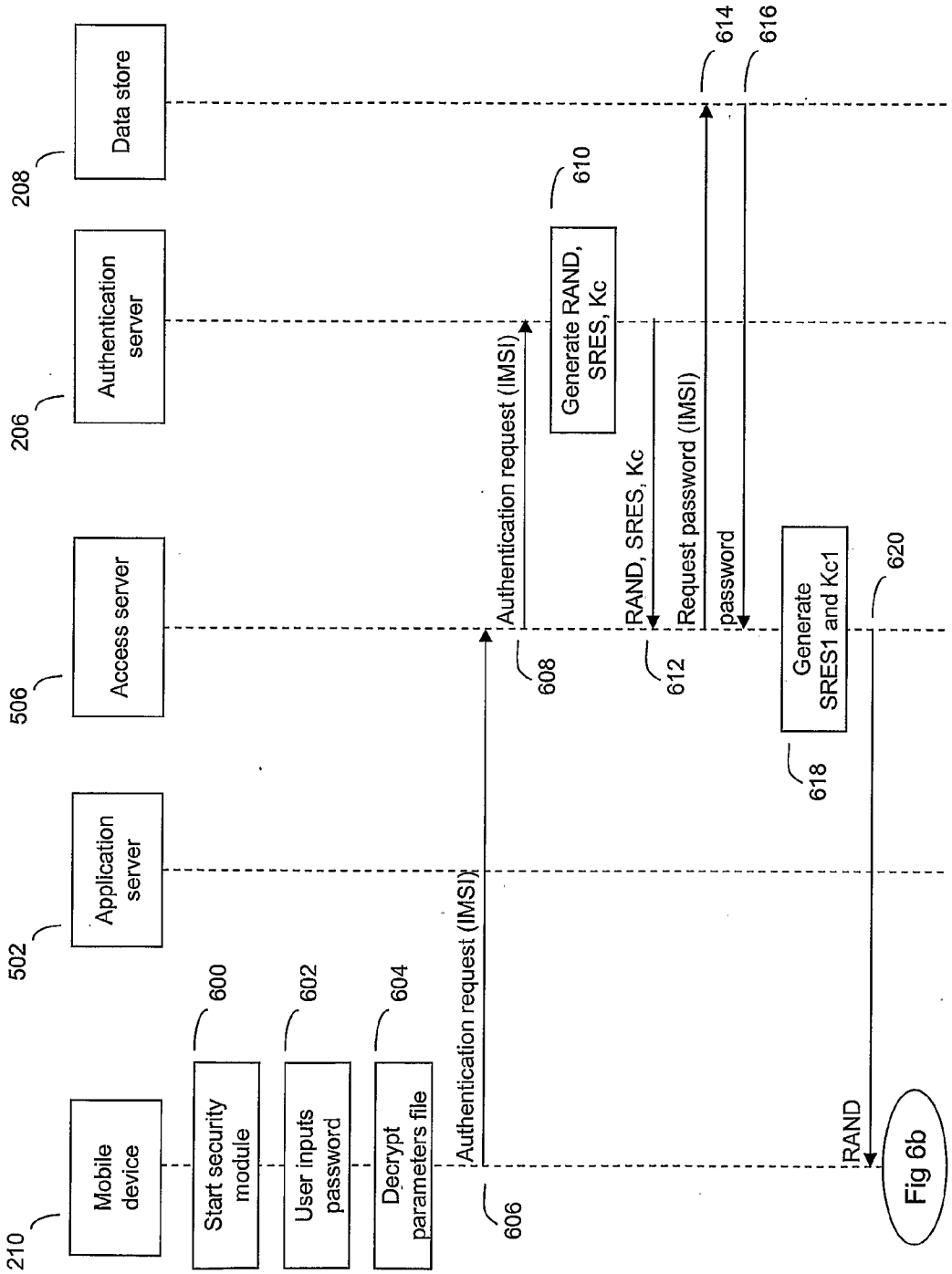
210
Mobile device
502
Application server
506
Access server
206
Authentication server
208
Data store
600
Start security module
602
User inputs password
604
Decrypt parameters file
606
Authentication request (IMSI)
608
Authentication request (IMSI)
610
Generate RAND, SRES, Kc
612
RAND, SRES, Kc
614
Request password (IMSI)
616
password
618
Generate SRES1 and Kc1
620
RAND
Fig 6b

Figure 6a

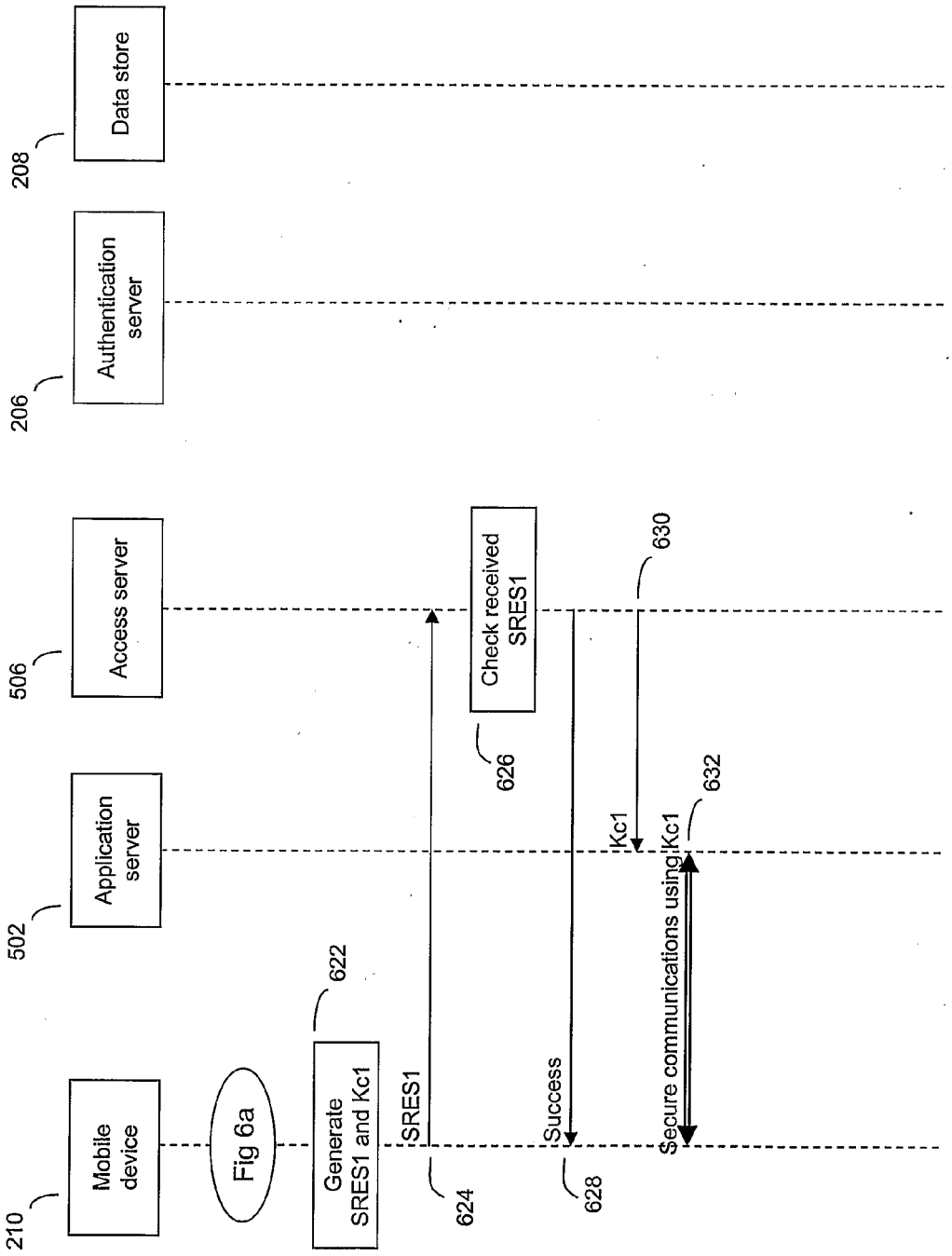
210
Mobile device
502
Application server
506
Access server
206
Authentication server
208
Data store
Fig 6a
622
Generate SRES1 and Kc1
SRES1
624
626
Check received SRES1
Success
628
630
Kc1
632
Secure communications using Kc1

Figure 6b

AUTHENTICATION METHOD

FIELD OF THE INVENTION

[0001] The present invention relates to a method of authentication in a telecommunications network, in particular a method of authenticating a mobile device using a network provisioned security module and subsequent secure communications between the mobile device and the network.

BACKGROUND TO THE INVENTION

[0002] Security in communication systems has always been important and mobile cellular communication systems have been no different. In early "first generation" analogue mobile phone systems, a third party could eavesdrop on the communications between a mobile terminal and the mobile network relatively easily over the radio interface. These problems were partly mitigated when "second generation" digital systems, such as GSM (Global System for Mobile communications), were adopted by mobile operators.

[0003] Security provisions, including authentication, under GSM are based upon a key sharing principle, where a secure smart card, a SIM (subscriber identity module), is used to store a secret key that is been preloaded onto the card when the card is made. The secret key is thus shared a priori between the mobile phone and the network operator before any communication is initiated. This shared secret key forms the basis for all subsequent key generation used for authentication and ciphering of communications to and from the mobile phone.

[0004] The SIM also holds other data as well as the shared secret key, commonly referred to as Ki, such as SIM applications, encryption algorithms, and user identifiers such as the IMSI (International mobile subscriber identity). SIM cards have been proven to be reasonably secure and tamper-proof and have been commonly used in both GSM and 3G mobile telecommunications networks for some time.

[0005] However, SIM cards suffer from a number of drawbacks. In particular, provisioning of SIM cards is a complex process brought about by having to manufacture the tamper resistant modules, initialising the cards with the requisite data (IMSI, Ki and operator secrets) and then distributing and handling of the physical cards to the subscriber.

[0006] Furthermore, most mobile devices these days also only have the capacity to use a single SIM card, and thus access to networks is limited to those allowed by the single SIM. The few devices that can handle multiple SIM cards are rare and are usually more complex and costly to manufacture as well as being more difficult to use.

SUMMARY OF THE INVENTION

[0007] It is the aim of embodiments of the present invention to address one or more of the above-stated problems.

[0008] According to one aspect of the present invention, there is provided a method of providing authentication of a mobile device in a telecommunications network comprising the steps of:

[0009] i) providing a user defined first password to an authentication server in the communications network;

[0010] ii) generating a set of security parameters by an authentication server and provisioning the security parameters to a mobile device, wherein the security parameters are stored at the mobile device and wherein the security parameters comprises an encryption key;

[0011] iii) authenticating the mobile device by challenging the integrity of the encryption key stored at the mobile device and verifying a first response generated by the mobile device in response to the challenge, wherein verifying comprises comparing by the network whether the first response matches a second response, wherein the first response is based on the encryption key stored at the mobile device and a second password input by the user, and the second response is generated by the network and is based on the encryption key generated by the authentication server and the user defined first password.

[0012] Furthermore, if the first and second responses match, then the method may further comprise:

[0013] iv) generating by the mobile device a ciphering key based on the stored encryption key and the second password; and

[0014] v) encrypting data transmitted from the mobile device to the network using the ciphering key.

[0015] The security parameters are usually encrypted and stored on the mobile device using the user defined first password. The user defined first password may be associated with the mobile device. Preferably, the first password is input by a user of the mobile device in response to a request by the mobile device.

[0016] Preferably, the security parameters further comprises a unique identifier generated by the authentication server and associated with the mobile device.

[0017] The step of challenging the integrity of the encryption key may comprise:

[0018] sending a random number generated by authentication server to the mobile device;

[0019] applying by the mobile device a first ciphering function to the random number and the encryption key stored at the mobile device to generate a first output; and

[0020] applying by the mobile device a second ciphering function to the first output together with the second password to generate the first response.

[0021] The second ciphering function may be defined by the network and provided to the mobile device by the network with the security parameters. This may be as part of a security module provided to the mobile device.

[0022] In a second aspect of the present invention, there is provided a system for authenticating a mobile device comprising:

[0023] a mobile device adapted to provide a user defined first password to an authentication server in a telecommunications network;

[0024] the authentication server adapted to generate a set of security parameters comprising an encryption key and provision the security parameters to the mobile device, and wherein the mobile device is adapted to store the security parameters and wherein the security parameters;

[0025] wherein the network is adapted to authenticate the mobile device by challenging the integrity of the encryption key stored at the mobile device and verifying a first response generated by the mobile device in response to the challenge, wherein verifying comprises comparing by the network whether the first response matches a second response, wherein the first response is based on the encryption key stored at the mobile device and a second password input by the user, and the second response is generated by the network and is based on the encryption key generated by the authentication server and the user defined first password.

[0026] In a further aspect of the present invention, there is provided a security module for a mobile device, said security module provided over a telecommunications network and comprising:

[0027] means for storing security parameters comprising an encryption key generated by a authentication server;

[0028] means for generating a response following a challenge by the network to the integrity of the stored encryption key, wherein the response is based on the encryption key stored at the mobile device and a password input by the user;

[0029] means for generating by the mobile device a ciphering key based on the stored encryption key and the password, wherein the ciphering key is for ciphering communications by the mobile device.

[0030] The authentication method and security module described offers much of the functionality of a standard GSM SIM card, but is implemented without the need for a physical SIM card and can be distributed over a network in the form of a software-based security module. Thus, many of the drawbacks associated with hardware based SIM cards are overcome. However, security is maintained through the specific provisioning and authentication steps employed, as well by using a further layer of user-defined, password based encryption/authentication.

[0031] As suggested, the method is typically executed on the mobile device side using a security module provided by the network. If the security module is ever compromised e.g. password stolen or module hacked, the service provider can block access by preventing further authentication steps or changing the ciphering/session key used by the network. A new set of passwords and security parameters can then be provided to the user together with a new security module if needed.

[0032] Provisioning of the security module and associated security parameters can be done online with only an internet or other network connection. No complex hardware provisioning is required. As provisioning is straightforward, the process can be repeated intermittently to generate new parameters and improve security of the system.

[0033] Even if an attacker manages to steal a user's encryption key (Ki), without knowledge of the user's password, the attacker will not be able to use those credentials to gain access to the network or decrypt the session traffic.

[0034] Multiple security modules can be provided, and thus provide a user with access to different networks or service providers. Such a scenario is not readily available with current systems.

BRIEF DESCRIPTION OF THE DRAWINGS

[0035] For a better understanding of the present invention reference will now be made by way of example only to the accompanying drawings, in which:

[0036] FIG. **1***a* is a diagram illustrating the operation of the GSM A3 algorithm;

[0037] FIG. **1***b* is a diagram illustrating the operation of the GSM A8 algorithm;

[0038] FIG. **1***c* is a diagram illustrating the operation of the GSM A5 algorithm;

[0039] FIG. **2** is a network diagram illustrating elements involved in an embodiment of the present invention;

[0040] FIG. **3** is a message flow diagram illustrating the provisioning of a security module in an embodiment of the present invention;

[0041] FIG. **4** illustrates the methods used to during authentication and ciphering in an embodiment of the present invention;

[0042] FIG. **5** is a network diagram illustrating elements in an authentication phase of an embodiment of the present invention;

[0043] FIG. **6** is a message flow diagram illustrating the authentication phase of an embodiment of the present invention;

DESCRIPTION OF THE PREFERRED EMBODIMENTS

[0044] The present invention is described herein with reference to particular examples. The invention is not, however, limited to such examples.

[0045] Authentication in GSM is based on two entities, the SIM card in the mobile device and an Authentication Centre (AuC) in the core network of the service provider associated with the SIM card. The subscriber is provided with a secret key, Ki, one copy of which is preloaded and stored securely in the SIM card when the card is manufactured, and the other copy stored securely at the AuC. In order to authenticate the SIM, the AuC generates a random number, RAND, which is sent to the mobile device holding the SIM. Both the SIM and the AuC use the random number RAND in conjunction with the subscriber's secret key Ki, stored at the respective entities (SIM and AuC), and an authentication algorithm A3 to generate a signed response SRES. SRES generated by the SIM is sent back to the core network, which determines if it is the same as that generated by the AuC using the same method. This is the standard SIM authentication process, and a similar method is used to generate session keys for ciphering of communications traffic between the mobile device and the network.

[0046] The authentication process is illustrated in more detail in FIG. **1***a*, which shows how the secret key Ki **100** is fed into the A3 algorithm **104** together with the random number RAND **102** provided by the AuC. The output from the A3 algorithm is the expected or signed response SRES **106**. SRES **106** generated using the A3 algorithm as shown in FIG. **1***a* is performed by both the SIM and the AuC. As shown in FIG. **1***a*, Ki **100** is typically 128 bits long, RAND **102** 128 bits long and SRES **106** 32 bits long.

[0047] The same random number RAND **102** generated by the AuC is used together with Ki **100** to determine the session key Kc **110**, which is used for subsequent ciphering of communications data. An algorithm called A8 **108** is used for generating the key Kc **110** and is performed by the SIM as well as by the AuC so that the mobile device and the core network are both respectively provided with the session key. This is illustrated in FIG. **1***b*.

[0048] In FIG. **1***b*, the secret key Ki **100** is fed into the A8 algorithm **108** together with the random number RAND **102** provided by the AuC. The output from the A8 algorithm is the session key Kc **110**. The session key Kc **110** is typically 64 bits long.

[0049] The SIM card comes preloaded with Ki and the A3 and A8 algorithms when the card is manufactured. The determination of SRES and Kc as illustrated in FIGS. **1***a* and **1***b* are performed within the secure environment of the SIM card itself. Ki in particular never leaves the SIM card, nor does the SIM card allow direct interrogation of Ki, thus maintaining the security and integrity of the system.

[0050] The session key Kc **110** is used to encrypt and decrypt data transmitted over the mobile network. The encryption or ciphering of data to be transmitted over the network is better illustrated in FIG. **1***c*. FIG. **1***c* shows how a ciphering algorithm A5 **114** takes the session key Kc **110** as an input together with the TDMA frame number **112** of the data frame to be ciphered and uses them to cipher the input data **116** into the output ciphertext **118**. Note that the process of ciphering has been simplified slightly in FIG. **1***c*. In practice, the A5 algorithm uses the TDMA frame number **112** and the session key Kc **110** to create a 114 bit keystream that is then XORed with 114 bit bursts of the input data to create the ciphertext **118**.

[0051] The mobile device is preloaded with the A5 algorithm and the ciphering using the A5 algorithm is usually performed by the mobile device itself. A similar process, but in reverse, is used to decipher data sent to the mobile device from the network. Likewise, the same process is used by the network to cipher and decipher data sent to and from the mobile device.

[0052] Embodiments of the present invention are built on GSM algorithms and methods shown in FIG. **1**. In the following examples, a third party service provider wishes to authenticate a user of a mobile device before securely communicating with the device. A method of authentication and data encryption provided for over a network to a mobile device and implemented in software module is proposed. The software module, hereinafter referred to as a software-based security module or security module, and the implementation methods are secured by using an additional layer of security involving the use of a password provided by the user during a provisioning phase. The password is applied to the authentication and encryption algorithms using operator-specific cryptographic functions. The security module can thus be used to provide authentication and secure access to various networks or applications.

[0053] Embodiments of the invention cover a provisioning phase as well as an authentication and data encryption phase. The provisioned security module gives the associated device secure access to a given network, such as a WiFi (IEEE 802.x) network, as well as secure access to any service providers using that network. A person skilled in the art will appreciate that access to other types of network can also be secured using the following methods, as well as secure access to other services and entities.

[0054] FIG. **2** illustrates a network arrangement **200** in an embodiment of the present invention associated with provisioning a security module to a mobile device **210**. The network **200** includes a laptop or similar device such as a computer **202** connected to a provisioning server **204** over connection **212**. The connection **212** may be an internet connection provided over WiFi for example. A person skilled in the art will appreciate that other connection types are possible. The provisioning server **204** handles provisioning of the security module components to a user's device upon receiving a request from the computer **202**. The provisioning server **204** is connected to an authentication server **206** over communications link **214** and also connected to data store **208** over communications link **216**. The provisioning server **204** is also able to communicate and transfer data to the mobile device **210**, which may be a mobile phone for example, over communications link **218**. In the case of the mobile device being a GSM phone, then communications link **218** is a GSM cellular mobile connection.

[0055] Whilst the authentication server **206** and data store **208** have been shown as separate entities, in practice, they may be located within the same physical entity or at the least be connected to each other.

[0056] The operation of each of these elements in FIG. **2** will now be described with reference to the message flow diagram of FIG. **3**, where like elements are referenced using like numerals.

[0057] In step **300**, the user first connects to the provisioning server **204** using the computer **202**. This connection may be over the internet and secured by using a HTTPS connection. The user is then presented with a web page or similar where the user can input details of the mobile device where the security module is required as shown in step **302**. The details input by the user include the mobile phone number of the mobile device **210** and also payment details associated with the service. The user also provides a password which is used in the later authentication process and also for securing the security module components on the mobile device **210**. In step **304**, these details input by the user are sent securely over the HTTPS connection from the computer **202** to the provisioning server **204**.

[0058] The provisioning server **204** then validates the details provided by the user in step **306**. Any of the details provided can be validated. For example, the payment details might be checked and payment approved, the password strength verified (length, duplication etc), and the mobile number format checked.

[0059] In step **308**, the provisioning server **204** makes a request to the authentication server **206** for security module parameters. The authentication server **206** receives the request and generates in response to the request a unique identifier for the mobile device **210** in step **310** as well as a secret key Ki. In this example, the identifier is referred to as the IMSI (international mobile subscriber identity). However, the identity is not restricted to having the limitations and format of a GSM IMSI. The term IMSI is used here to provide a simple reference to the unique identity, which is also associated with the subscriber or user.

[0060] The identifier and Ki are both stored securely at the authentication server **206**. Further copies of these parameters are sent to the provisioning server in step **312**. The unique identifier should be different to any identifier generated previously by the authentication server **206** previously.

[0061] In step **314**, the provisioning server **204** stores the received identifier and the password provided by the user in the earlier registration step **304**. The IMSI and password can be stored locally at the provisioning server **204** or, as shown in step **314**, can be sent to the data store **208**, where it can be securely stored there in step **316**.

[0062] In step **318**, the provisioning server **204** encrypts and sends a file containing the security parameters IMSI and Ki to the mobile device **210** specified by the mobile number given in step **304**. The file is encrypted using the password provided by the user in step **304**. Also sent with the encrypted file is the software-based security module. The security module is an application that is run by the mobile device **210** that executes the various methods used for authentication and ciphering which will be described in more detail below. The security module uses security parameters during its operation and also includes operator specific cryptographic functions such as F**1** and F**2** described below.

[0063] The security module and encrypted file are sent to the mobile device **210** using a SMS (short message service) message. Similarly, delivery methods such as WAP push can be utilised as well.

[0064] In an alternative arrangement, the security module and security parameters can be sent back to the computer **202** over the HTTPS connection, and the computer **202** can then forward the data to the mobile device **210** using a local connection such as a data cable or using Bluetooth.

[0065] In step **320**, the user installs the security module on the mobile device **210** and also stores the security parameters IMSI and Ki. The storage is preferably secure, which can be done by keeping the parameters encrypted using the password specified by the user in the earlier registration step **304** or by using a new password specified by the user.

[0066] Whilst the above example has been described with reference to a computer **202** connecting to the provisioning server over a HTTPS connection over the internet, other variations on the manner of connection are envisaged. For example, the user could also connect to the provisioning server **204** using a mobile phone using a GPRS connection to connect to the Internet. Indeed, the mobile device **210** could be used instead of the computer **202**, which means that the mobile device is used to initiate the provisioning process as well as subsequently being in receipt of the security module later.

[0067] FIG. **4** shows how the security parameters provided to the mobile device **210** are used together with the password provided by the user to authenticate the mobile device and encrypt data transmitted to and from a network or service provider. The methods for authentication as well as subsequent data encryption are based on the challenge response technique described in relation to GSM above and are provided for by the security module. These methods are shown in FIGS. **1***a*, **1***b* and **1***c*.

[0068] The method of authentication of the mobile using the security parameters received is shown in FIG. **4***a*, and is executed by the security module on the mobile device **210**. FIG. **4***b* shows the method executed by the security module for generating the session key for ciphering data to be transmitted between the mobile device and the network. FIG. **4***c* shows how the session key is used specifically for ciphering data.

[0069] FIG. **5** illustrates a network arrangement **500** comprising the mobile device **210**, now loaded with the provisioned security module, as well as an application server **502**. The application server **502** may provide various services to the mobile device, such as video downloads, online banking or provide VoIP services. However, access to the application server **502** and the network in which it resides is only possible once the mobile device **210** has been authenticated. The application server **502** and associated network is part of the network for which the security module is configured to be used in. Thus, the mobile device is able to authenticate and gain access to the network and application server **502** using the security module. The network may be a WiFi network for example or a cellular mobile network such as a GSM network.

[0070] The network **500** also includes an access server **506** and the authentication server **206** and data store **208** (as described earlier in FIG. **2**).

[0071] The operation of the security module in the mobile device **210** in relation to authentication and ciphering of data communications will now be described with reference to the flow diagram of FIG. **6**. References will also be made to FIGS. **4***a*, **4***b* and **4***c* where appropriate to describe the specific algorithms used in the authentication and ciphering process.

[0072] Firstly, in step **600**, the user initiates the security module. This may be by way of a further application on the device such as a WPA supplicant that is used to provide improved security in a wireless network by using the IEEE 802.11i standard. Furthermore, the security module may be triggered in response to a request by the network the mobile device **210** is attempting to connect to.

[0073] The security module then prompts the user to input the password that the user provided during the provisioning process. The user inputs the password in step **602**. The security module then decrypts the encrypted file stored on the mobile device, which contains the unique identifier and Ki in step **604**. The mobile device then forwards the unique identifier, which we refer to here as the IMSI, to the access server **506** in an authentication request message in step **606**. The method by which the IMSI is forwarded depends on the network connections available to the mobile device. For example, the connection to the access server **506** may be via a GSM connection, and so communications will be via a base station (amongst other elements), whereas if the connection is a WiFi connection, then communications will involves at least an access point as well.

[0074] In step **608**, the access server **506** forwards the authentication request, including the IMSI, to the authentication server **206**. The authentication server **206** then uses the IMSI received in the authentication request to retrieve the previously generated (in step **310** in FIG. **3**) secret key Ki corresponding to the IMSI. The authentication server then generates a triplet comprising a random number RAND, an expected response SRES and a key Kc in step **612**. Each of these parameters is generated in accordance with the methods shown in FIG. **1**. The values generated for RAND, SRES and Kc are then sent to the access server **506** in step **612**.

[0075] In step **614**, the access server **506** sends a request to the data store **208** for the password associated with the mobile device that was provided by the user in the earlier provisioning phase (see step **304** in FIG. **3**). The request includes the IMSI in order to identify the mobile device **210**. The data store **208** uses the IMSI to look up the corresponding password that has been stored and returns that password in step **616**.

[0076] The access server **506** then uses the received SRES from the authentication server **206** and the password from the data store **208** to generate an adapted expected response SRES**1**. This is done using cryptographic algorithm F**1** taking SRES and the password as inputs and outputting SRES**1**. The specific method of generating SRES**1** will now be described in more detail with reference to FIG. **4***a*.

[0077] The network (the authentication server **206** in this example) first retrieves the key Ki corresponding to the IMSI provided, and also generates a random number RAND. Typically, both Ki and RAND are 128 bits long. As shown in FIG. **4***a*, Ki **400** and RAND **402** are then fed into the A3 GSM algorithm **104**. The output generated is SRES **404**. This value of SRES **404** is the one transferred from the authentication server **206** to the access server **506** in step **612**. The generation of SRES is performed by the authentication server **206** in step **610**.

[0078] Once the access server **506** has received SRES **404**, it calculates SRES**1** **412** as illustrated in the remainder of FIG. **4***a*. Specifically, SRES **404** is fed into cryptographic algorithm F**1** together with the password **406** received from the

data store **208**. The cryptographic function F**1** is operator specific and can be defined by the operator for its specific use in contrast to the GSM algorithms like A3, A5 and A8, which are generally used across service providers and operators. The F**1** function can also be tailored and thus be specific to the mobile device **210**, as the function F**1** is included as part of the security module provided to the mobile device **210** in step **318**.

[0079] Similarly, the access server **506** also uses the received Kc **406** from the authentication server **206** and the password from the data store **208** and feeds both these parameters into cryptographic function F**2** to derive Kc**1** **414**. The generation of Kc**1** **414** is illustrated in FIG. **4***b*. It should be noted that like F**1**, the cryptographic function F**2** is also operator specific, but can also be further specified for the individual mobile device **210** in question.

[0080] Mathematically, the values of SRES**1** **412** and Kc**1** **414** can be represented using the following equations

$$SRES1=F1(SRES,\text{PASSWORD}) \quad (1)$$

$$Kc1=F2(Kc,\text{PASSWORD}) \quad (2)$$

[0081] In preferred embodiments of the invention, the lengths of SRES**1** and Kc**1** are 32 bits and 64 bits respectively to ensure compatibility with existing applications that utilise the GSM authentication standards without any modifications.

[0082] The functions F**1** and F**2**, and the methods illustrated in FIGS. **4***a* and **4***b*, are also implemented in the security module provisioned to the mobile device **210**.

[0083] In step **620**, the access server **506** sends the RAND value to the mobile device **210**. This value of RAND is taken by the security module application in the mobile device **210** and is sued by the security module to determine the expected response SRES**1** and ciphering key Kc**1** in accordance with the methods shown in FIGS. **4***a* and **4***b* in step **622**.

[0084] Specifically, the methods used to calculate SRES**1** and Kc**1** used by the security module are the same as those used by the combination of the access server **506** and authentication server **206** described above in step **618** and shown in FIGS. **4***a* and **4***b*. The value of Ki used is the one stored on the mobile device and obtained from the decrypted file in step **604**. This is combined with the received value of RAND using to A3 and A8 algorithms to generate SRES and Kc respectively. These are then fed into the F**1** and F**2** functions together with the password input in step **602** to get SRES**1** and Kc**1** respectively as shown in FIGS. **4***a* and **4***b*.

[0085] The mobile device **210** then sends of the value of SRES**1** calculated by the security module to the access server **506** in step **624**. The access server **506** then checks the value of SRES**1** received from the mobile device **210** with the value of SRES**1** calculated itself in step **618**. If the two values match, then the mobile device is authenticated and the access server **506** sends the mobile device **210** a SUCCESS message in step **628**.

[0086] The mobile device **210** then uses the value of Kc**1** generated in step **622** to encrypt and decrypt data transferred to and from the mobile device. The method for ciphering is shown in FIG. **4***c* and is the same as that described with reference to FIG. **1***c* above, but using Kc**1** instead of Kc. In step **630**, the access server **506** provides the application server **502** with a copy of Kc**1** generated by the access server **506** in step **618**. Thus, by mobile device **210** and the application server **502** can communicate securely by ciphering all data using the now shared session key of Kc**1** as shown in step **632**.

[0087] Furthermore, the session key Kc**1** generated by the access server **506** can be transferred to other entities in the network to enable secure communications between the other entity and the mobile device **210**.

[0088] Should the session key Kc**1** be compromised at any stage, the access server **506** or mobile device **210** can initiate authentication again and by using a new RAND, a new session key Kc**1** can be generated. This is also particularly useful if different session keys are needed for different application servers or sessions to maintain the security of the network.

[0089] In the above example, the F**1** and F**2** functions are performed by the access server **506**. However, these functions can also be implemented at the authentication server **206** depending on the set up of the network.

[0090] It should also be noted that communications between the access server **506** and the authentication server **206** and data store **208** are secured accordingly to protect the integrity of the data transferred between those parties, in particular the password sent by the data store **208**.

[0091] In a further embodiment of the invention, the authentication server **206** can issue several challenges (RAND) and thus several expected responses (SRES) are also generated. This means that the security module can be interrogated several times and several SRES**1** generated, which can add to the security provided, ensuring the integrity of the mobile device **210** and further validate its identity.

[0092] It is noted at this point that at no stage during the provisioning stage is the password provided by the user ever stored in a clear form on the mobile device **210** itself. Indeed, the password is only ever used to encrypt the security parameters stored on the mobile device and is not itself stored on the mobile device. Likewise, when user inputs the password into the mobile device **210** in the authentication phase, the password is only held for as long as needed to calculate SRES**1** and Kc**1**. Thus, the password is never stored permanently on the mobile device and thus significantly reduces the likelihood that it will be compromised or obtained by a hacker.

[0093] In general, it is noted herein that while the above describes examples of the invention, there are several variations and modifications which may be made to the described examples without departing from the scope of the present invention as defined in the appended claims. One skilled in the art will recognise modifications to the described examples.

1. A method of providing authentication of a mobile device in a telecommunications network comprising the steps of:

i) providing a user defined first password to an authentication server in the communications network;

ii) generating a set of security parameters by an authentication server and provisioning the security parameters to a mobile device, wherein the security parameters are stored at the mobile device and wherein the security parameters comprises an encryption key;

iii) authenticating the mobile device by challenging the integrity of the encryption key stored at the mobile device and verifying a first response generated by the mobile device in response to the challenge, wherein verifying comprises comparing by the network whether the first response matches a second response, wherein the first response is based on the encryption key stored at the mobile device and a second password input by the user, and the second response is generated by the network and is based on the encryption key generated by the authentication server and the user defined first password.

2. A method according to claim **1**, wherein if the first and second responses match, the method further comprises:

iv) generating by the mobile device a ciphering key based on the stored encryption key and the second password; and

v) encrypting data transmitted Thorn the mobile device to the network using the ciphering key.

3. A method according to claim **1**, wherein the security parameters are encrypted and stored on the mobile device using the user defined first password.

4. A method according to claim **1**, wherein the user defined first password is associated with the mobile device.

5. A method according to claim **1** wherein the first password is input by a user of the mobile device in response to a request by the mobile device.

6. A method according to claim **1**, wherein the security parameters further comprises a unique identifier generated by the authentication server and associated with the mobile device.

7. A method according to claim **1**, wherein the step of challenging the integrity of the encryption key comprises: sending a random number generated by authentication server to the mobile device; applying by the mobile device a first ciphering function to the random number and the encryption key stored at the mobile device to generate a first output; applying by the mobile device a second ciphering function to the first output together with the second password to generate the first response.

8. A method according to claim **7**, wherein the second ciphering function is defined by the network and provided to the mobile device by the network with the security parameters.

9. A system for authenticating a mobile device comprising:

a mobile device adapted to provide a user defined first password to an authentication server in a telecommunications network;

the authentication server adapted to generate a set of security parameters comprising an encryption key and provision the security parameters to the mobile device, and wherein the mobile device is adapted to store the security parameters and wherein the security parameters;

wherein the network is adapted to authenticate the mobile device by challenging the integrity of the encryption key stored at the mobile device and verifying a first response generated by the mobile device in response to the challenge, wherein verifying comprises comparing by the network whether the first response matches a second response, wherein the first response is based on the encryption key stored at the mobile device and a second password input by the user, and the second response is generated by the network and is based on the encryption key generated by the authentication server and the user defined first password.

10. A security module for a mobile device, said security module provided over a telecommunications network and comprising:

means for storing security parameters comprising an encryption key generated by a authentication server; means for generating a response following a challenge by the network to the integrity of the stored encryption key, wherein the response is based on the encryption key stored at the mobile device and a password input by the user;

means for generating by the mobile device a ciphering key based on the stored encryption key and the password, wherein the ciphering key is for ciphering communications by the mobile device.

* * * * *