US011973864B2

(12) **United States Patent**
Nix

(10) **Patent No.: US 11,973,864 B2**
(45) **Date of Patent: *Apr. 30, 2024**

(54) **SYSTEMS AND METHODS FOR "MACHINE-TO-MACHINE" (M2M) COMMUNICATIONS BETWEEN MODULES, SERVERS, AND AN APPLICATION USING PUBLIC KEY INFRASTRUCTURE (PKI)**

(71) Applicant: **Network-1 Technologies, Inc.**, New York, NY (US)

(72) Inventor: **John A. Nix**, Evanston, IL (US)

(73) Assignee: **Network-1 Technologies, Inc.**, New York, NY (US)

(*) Notice: Subject to any disclaimer, the term of this patent is extended or adjusted under 35 U.S.C. 154(b) by 0 days.

This patent is subject to a terminal disclaimer.

(21) Appl. No.: **18/111,669**

(22) Filed: **Feb. 20, 2023**

(65) **Prior Publication Data**

US 2023/0208629 A1 Jun. 29, 2023

Related U.S. Application Data

(63) Continuation of application No. 17/647,812, filed on Jan. 12, 2022, now Pat. No. 11,606,204, which is a (Continued)

(51) **Int. Cl.**
H04L 9/08 (2006.01)
G06F 21/35 (2013.01)
(Continued)

(52) **U.S. Cl.**
CPC ***H04L 9/0861*** (2013.01); ***G06F 21/35*** (2013.01); ***G06F 21/445*** (2013.01); ***H04J 11/00*** (2013.01);
(Continued)

(58) **Field of Classification Search**
CPC . H04W 12/40; H04W 52/0216; G06F 21/445; G06F 2221/2115; H04L 9/0841;
(Continued)

(56) **References Cited**

U.S. PATENT DOCUMENTS

10,057,059 B2 * 8/2018 Nix H04J 11/00
10,530,575 B2 * 1/2020 Nix H04L 9/32
(Continued)

Primary Examiner — David J Pearson
(74) *Attorney, Agent, or Firm* — Amster, Rothstein & Ebenstein LLP

(57) **ABSTRACT**

Methods and systems are provided for supporting efficient and secure "Machine-to-Machine" (M2M) communications using a module, a server, and an application. A module can communicate with the server by accessing the Internet, and the module can include a sensor and/or an actuator. The module, server, and application can utilize public key infrastructure (PKI) such as public keys and private keys. The module can internally derive pairs of private/public keys using cryptographic algorithms and a first set of parameters. A server can authenticate the submission of derived public keys and an associated module identity. The server can use a first server private key and a second set of parameters to (i) send module data to the application and (ii) receive module instructions from the application. The server can use a second server private key and the first set of parameters to communicate with the module.

20 Claims, 17 Drawing Sheets

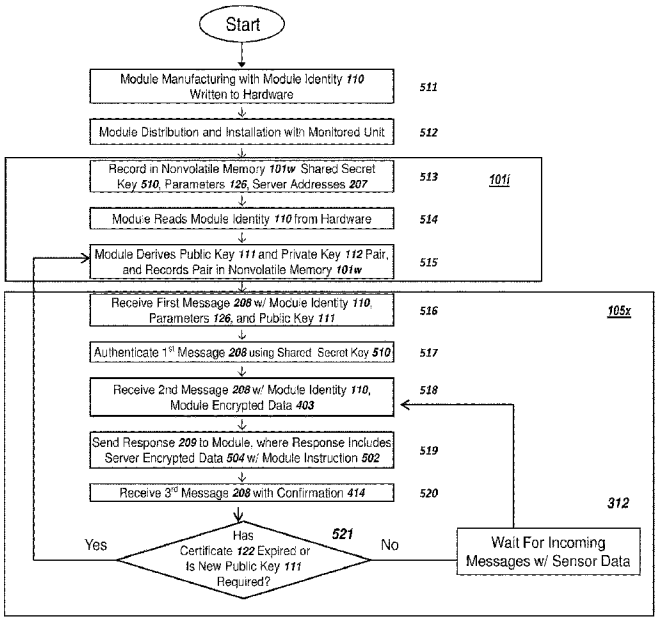

Related U.S. Application Data

continuation of application No. 16/593,561, filed on Oct. 4, 2019, now Pat. No. 11,258,595, which is a continuation of application No. 16/036,506, filed on Jul. 16, 2018, now Pat. No. 10,530,575, which is a continuation of application No. 15/583,968, filed on May 1, 2017, now Pat. No. 10,057,059, which is a continuation of application No. 15/010,905, filed on Jan. 29, 2016, now Pat. No. 9,641,327, which is a continuation of application No. 14/055,606, filed on Oct. 16, 2013, now Pat. No. 9,276,740.

(51) **Int. Cl.**

G06F 21/44	(2013.01)
H04J 11/00	(2006.01)
H04L 9/00	(2022.01)
H04L 9/14	(2006.01)
H04L 9/30	(2006.01)
H04L 9/32	(2006.01)
H04L 9/40	(2022.01)
H04L 12/28	(2006.01)
H04L 67/04	(2022.01)
H04W 4/70	(2018.01)
H04W 8/08	(2009.01)
H04W 12/02	(2009.01)
H04W 12/033	(2021.01)
H04W 12/04	(2021.01)
H04W 12/06	(2021.01)
H04W 12/069	(2021.01)
H04W 12/40	(2021.01)
H04W 40/00	(2009.01)
H04W 52/02	(2009.01)
H04W 76/27	(2018.01)
H04W 80/04	(2009.01)
H04W 84/12	(2009.01)
H04W 88/12	(2009.01)

(52) **U.S. Cl.**

CPC ***H04L 9/006*** (2013.01); ***H04L 9/0816*** (2013.01); ***H04L 9/0841*** (2013.01); ***H04L 9/085*** (2013.01); ***H04L 9/088*** (2013.01); ***H04L 9/0894*** (2013.01); ***H04L 9/14*** (2013.01); ***H04L 9/30*** (2013.01); ***H04L 9/3066*** (2013.01); ***H04L 9/32*** (2013.01); ***H04L 9/321*** (2013.01); ***H04L 9/3239*** (2013.01); ***H04L 9/3247*** (2013.01); ***H04L 9/3249*** (2013.01); ***H04L 9/3263*** (2013.01); ***H04L 12/2854*** (2013.01); ***H04L 63/0272*** (2013.01); ***H04L 63/0435*** (2013.01); ***H04L 63/0442*** (2013.01); ***H04L 63/045*** (2013.01); ***H04L 63/061*** (2013.01); ***H04L 63/0807*** (2013.01); ***H04L 63/123*** (2013.01); ***H04L 63/166*** (2013.01); ***H04L 67/04*** (2013.01); ***H04W 4/70*** (2018.02); ***H04W 8/082*** (2013.01); ***H04W 12/02*** (2013.01); ***H04W 12/033*** (2021.01); ***H04W 12/04*** (2013.01); ***H04W 12/06*** (2013.01); ***H04W 12/069*** (2021.01); ***H04W 12/40*** (2021.01); ***H04W 40/005*** (2013.01); ***H04W 52/0216*** (2013.01); ***H04W 52/0235*** (2013.01); ***H04W 52/0277*** (2013.01); ***H04W 76/27*** (2018.02); ***H04W 80/04*** (2013.01); ***H05K 999/99*** (2013.01); *G06F 2221/2105* (2013.01); *G06F 2221/2107* (2013.01); *G06F 2221/2115* (2013.01); *H04L 63/0464* (2013.01); *H04L 2209/24* (2013.01); *H04L 2209/72* (2013.01); *H04L 2209/805* (2013.01); *H04W 84/12* (2013.01); *H04W 88/12* (2013.01); *Y02D 30/70* (2020.08)

(58) **Field of Classification Search**

CPC H04L 9/0816; H04L 9/32; H04L 63/0272; H04L 63/045; H04L 63/0442; H04L 63/123; H04L 63/061

See application file for complete search history.

(56) **References Cited**

U.S. PATENT DOCUMENTS

11,258,595	B2 *	2/2022	Nix	H04L 63/061
11,606,204	B2 *	3/2023	Nix	H04W 12/02
2014/0082359	A1 *	3/2014	Nakhjiri	H04L 9/3066 713/168

* cited by examiner

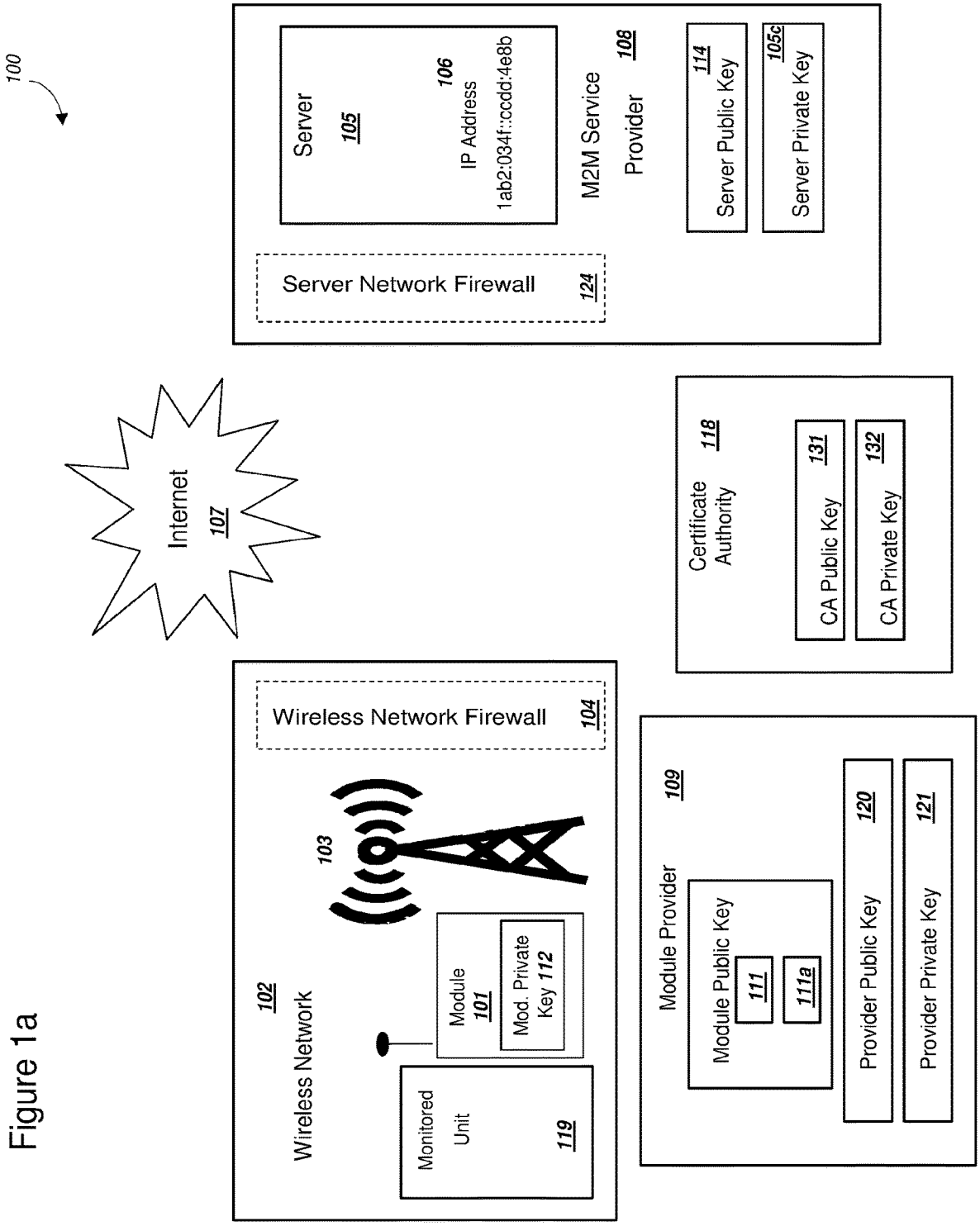
100
Server
105
106
IP Address
1ab2:034f::ccdd:4e8b
M2M Service
Provider
108
114
Server Public Key
105c
Server Private Key
Server Network Firewall
124
Internet
107
Certificate
Authority
118
131
CA Public Key
132
CA Private Key
Wireless Network Firewall
104
103
102
Wireless Network
Module
101
Mod. Private
Key 112
Monitored
Unit
119
Module Provider
109
Module Public Key
111
111a
Provider Public Key
120
Provider Private Key
121

Figure 1a

Figure 1b

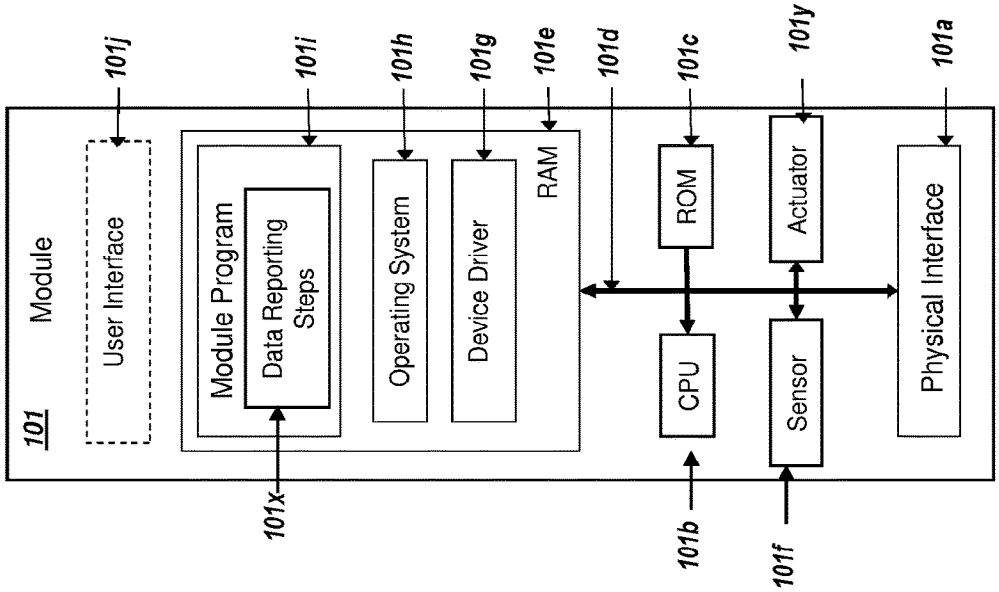

Figure 1c

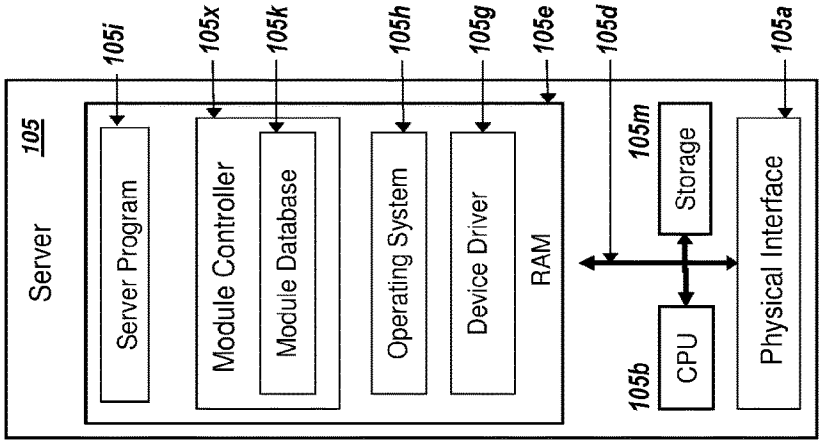

Figure 1d

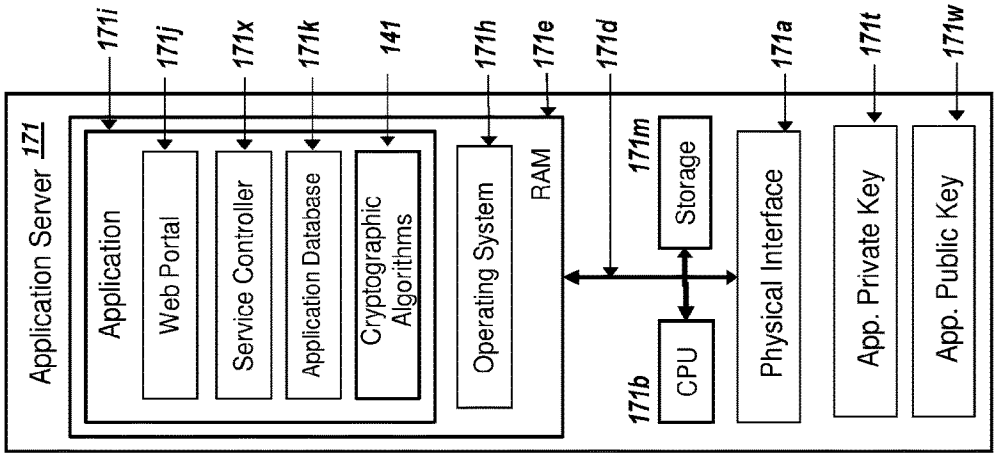

Figure 1f

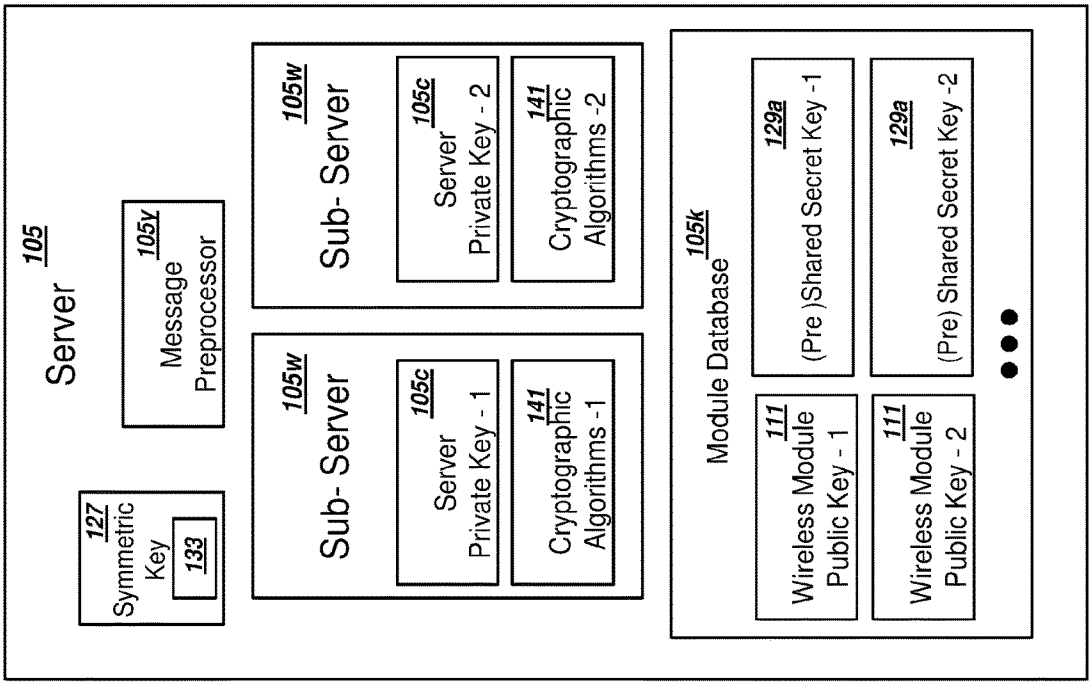

Figure 1e

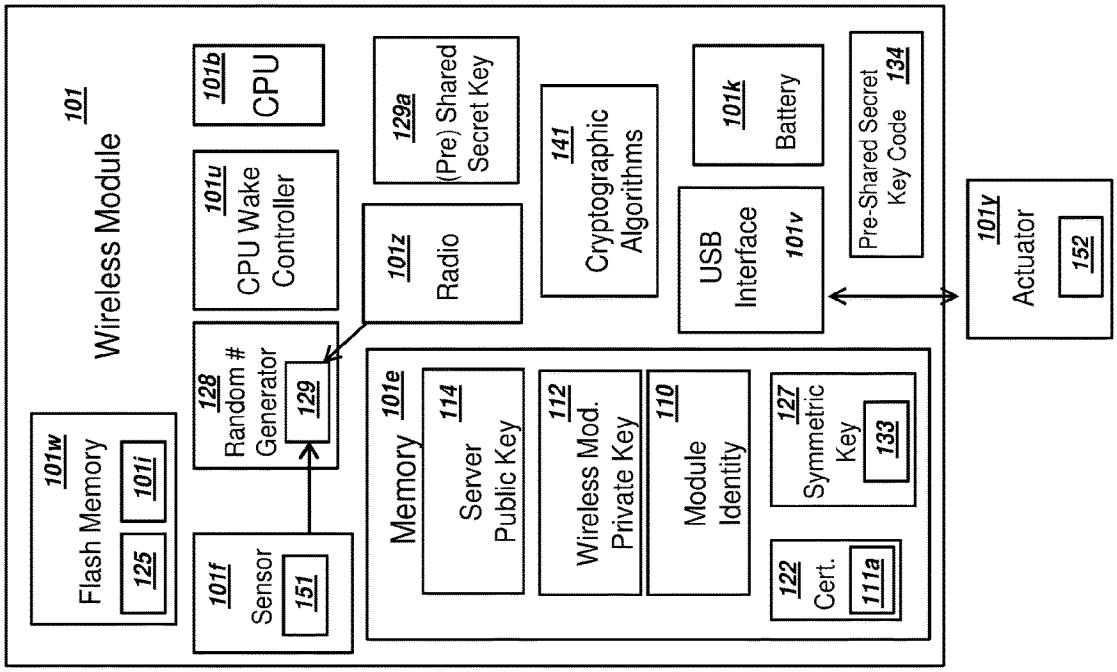

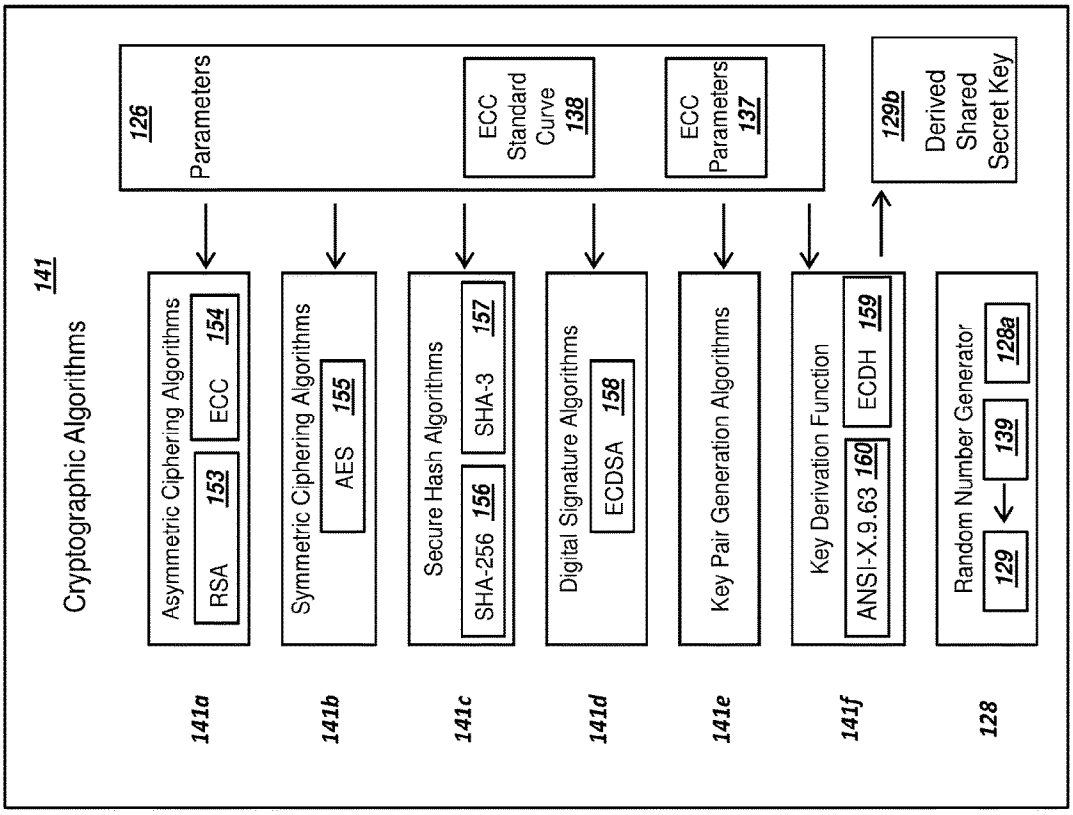
141
Cryptographic Algorithms
126
Parameters
ECC Standard Curve 138
ECC Parameters 137
129b
Derived Shared Secret Key
141a
Asymmetric Ciphering Algorithms
RSA 153
ECC 154
141b
Symmetric Ciphering Algorithms
AES 155
141c
Secure Hash Algorithms
SHA-256 156
SHA-3 157
141d
Digital Signature Algorithms
ECDSA 158
141e
Key Pair Generation Algorithms
141f
Key Derivation Function
ANSI-X.9.63 160
ECDH 159
128
Random Number Generator
129
139
128a

Figure 1g

Figure 1h

283 bit Elliptic Curve Key with SHA 256 Signature ("..." is long text removed)

```
Certificate:
  Data:
    Version: 3 (0x2)
    Serial Number: 1234931064 (0x499c6c20)
    Signature Algorithm: SHA-256 ECDSA-256.                                  110
    Issuer: OU=JNIX, CN=server01
    Validity
      Not Before: Feb 01 20:15:24 2009 GMT
126 ->Not After : Jul 01 20:15:24 2019 GMT
    Subject: C=US, ST=Illinois, L=Chicago, O=Module Provider, OU=1122AABBFF00
111a ->  CN=456
  Subject Public Key Info:
      Public Key Algorithm: id-ecPublicKey
        EC Public Key:
         pub:
           a7:a0:8a:0e:27:8f:8f:67:7f:05:36:0c:7e:f4:18:
111        ...
           67:60:2d:57:87:8d:cd:0b:e1:f5:3f:ac:aa:81:ea:
126 ->  ASN1 OID: sect283r1
    X509v3 extensions:
      X509v3 Subject Key Identifier:
        8D:F4:51:AB:B9:41:1F:FC:73:B3:DB:77:45:96:15:54:1A:52:85:25
122   X509v3 Authority Key Identifier:
        keyid:FC:99:74:45:56:10:F1:87:AD:EA:56:70:67:A2:26:0E:3D:9E:D6:66
         DirName:/OU=JNIX/CN=server41
         serial:49:9C:6A:ED
      X509v3 CRL Distribution Points:
         Full Name:
          URI:URI:http://www.inchargesys.com/ca/crl/ics_root_ca.crl
      X509v3 Key Usage:
         Digital Signature
  Signature Algorithm: ECDSA with SHA256
    83:08:20:2a:79:e3:c3:60:b0:2f:c2:89:d4:a2:b7:57:3e:b6:
123            ...
    05:ce:d3:e4:34:cf:d2:e1:e3:c3:60:b0:2f:c2:25
-----BEGIN CERTIFICATE-----
BggqgRzXYwzjCCAYKgAwIBAgIESZxsIDKnnjw2CwL8KJ1K
...
EBAQUAMCIxDTALMIIBegwggK3Vz62JQ==
-----END CERTIFICATE-----
```

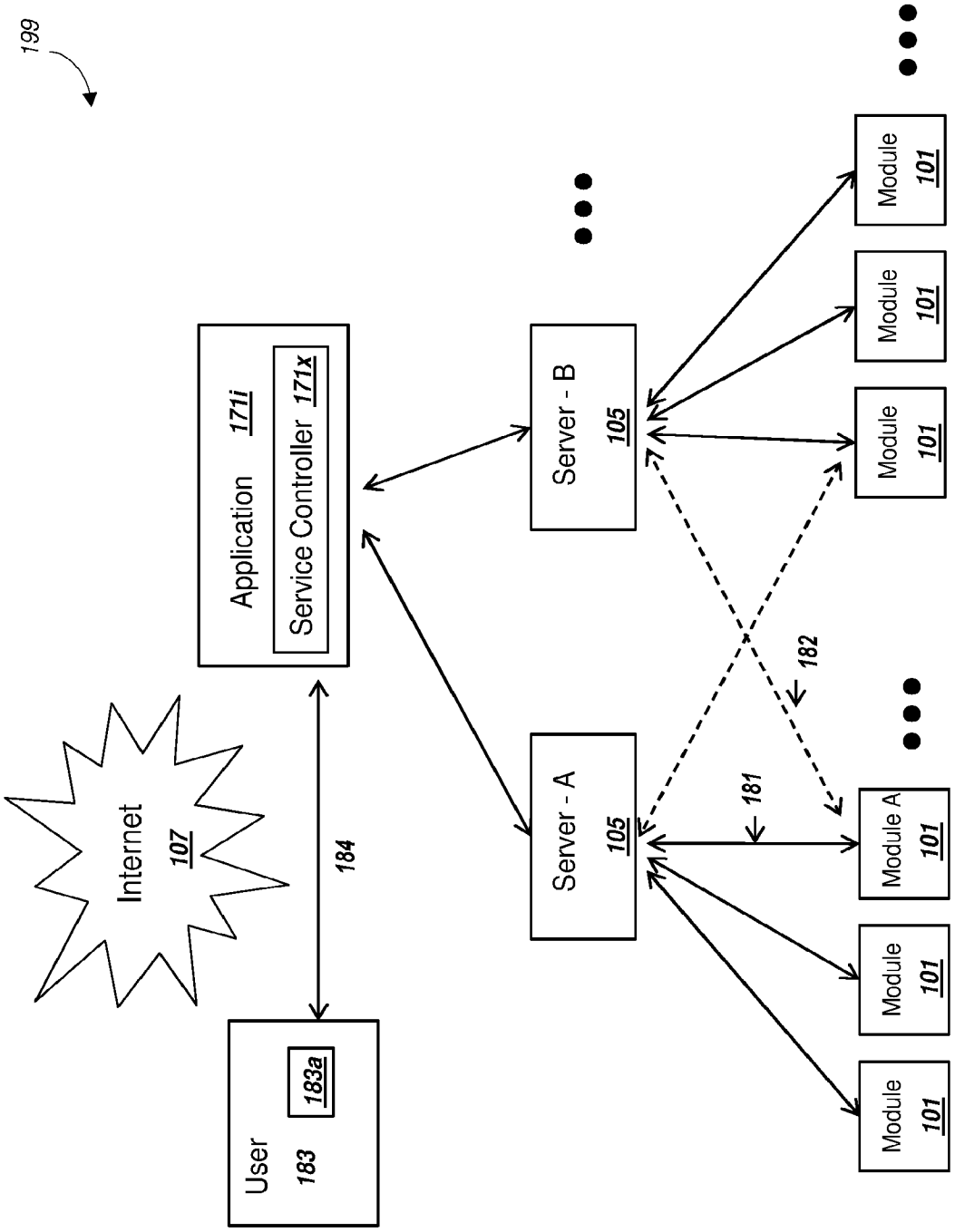
199
Internet
107
184
User
183
183a
Application
171i
Service Controller
171x
Server - A
105
Server - B
105
181
182
Module A
101
Module
101
Module
101
Module
101
Module
101

Figure 1i

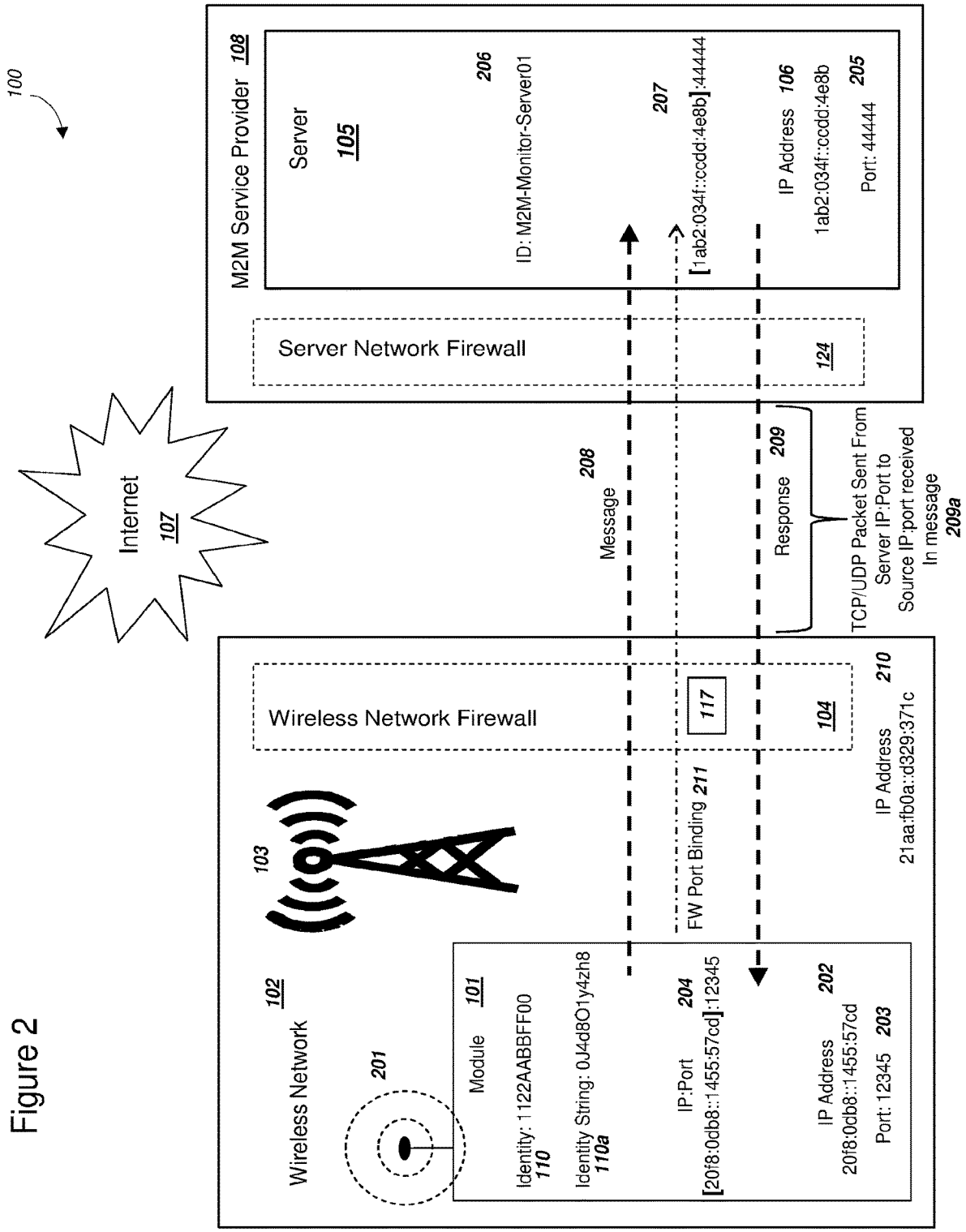
100
M2M Service Provider 108
Server
105
206
ID: M2M-Monitor-Server01
207
[1ab2:034f::ccdd:4e8b]:44444
IP Address 106
1ab2:034f::ccdd:4e8b
205
Port: 44444
Server Network Firewall
124
Internet
107
208
Message
209
Response
TCP/UDP Packet Sent From
Server IP:Port to
Source IP:port received
In message
209a
Wireless Network Firewall
117
104
IP Address 210
21aa:fb0a::d329:371c
103
FW Port Binding 211
102
Wireless Network
201
Module 101
Identity: 1122AABBFF00
110
Identity String: 0J4d8O1y4zh8
110a
IP:Port 204
[20f8:0db8::1455:57cd]:12345
IP Address 202
20f8:0db8::1455:57cd
Port: 12345 203

Figure 2

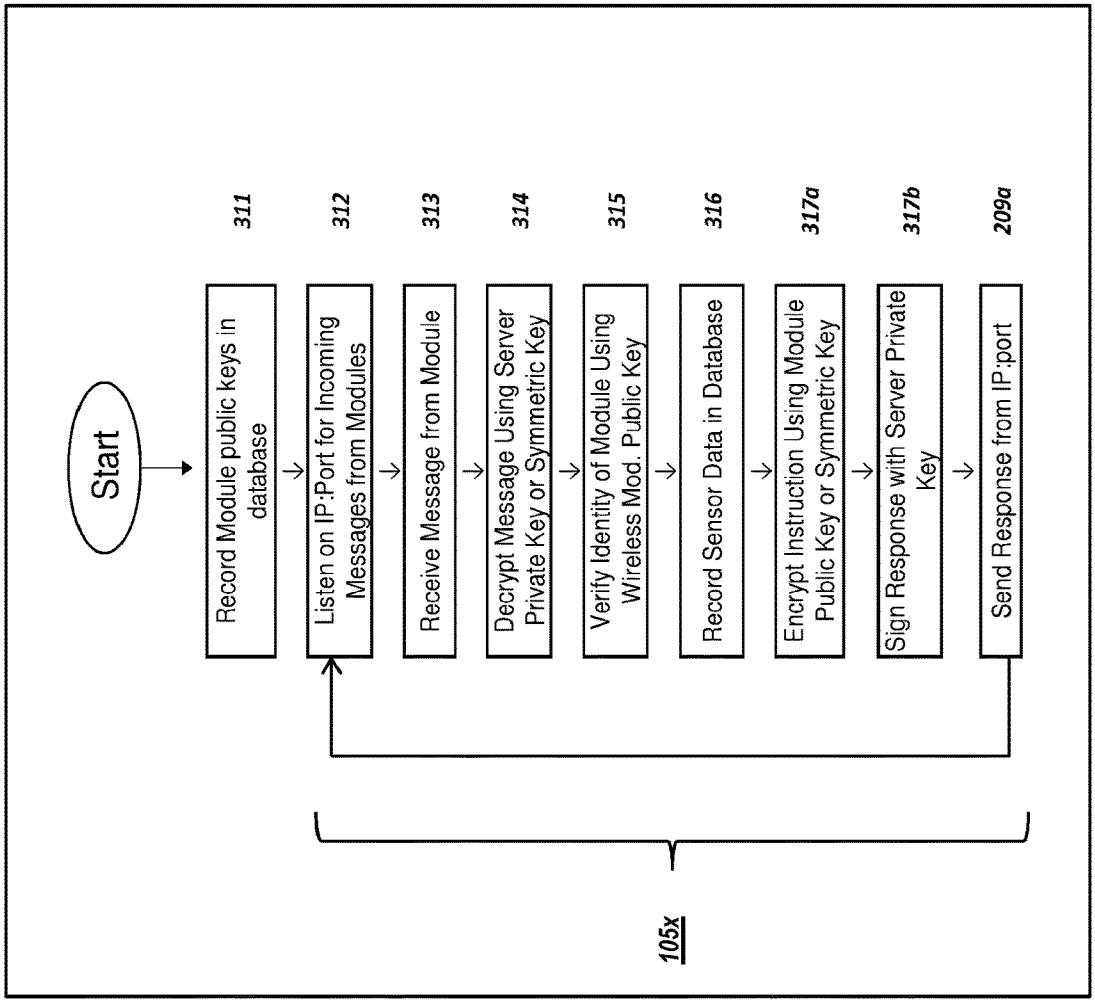
Start
Record Module public keys in database
311
Listen on IP:Port for Incoming Messages from Modules
312
Receive Message from Module
313
Decrypt Message Using Server Private Key or Symmetric Key
314
Verify Identity of Module Using Wireless Mod. Public Key
315
Record Sensor Data in Database
316
Encrypt Instruction Using Module Public Key or Symmetric Key
317a
Sign Response with Server Private Key
317b
Send Response from IP:port
209a
105x

Figure 3

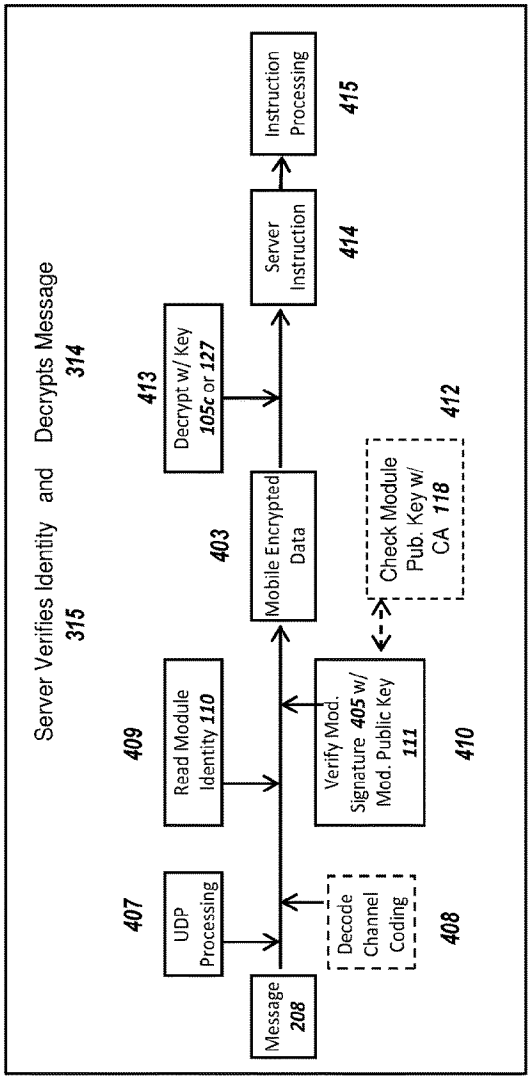

Figure 4

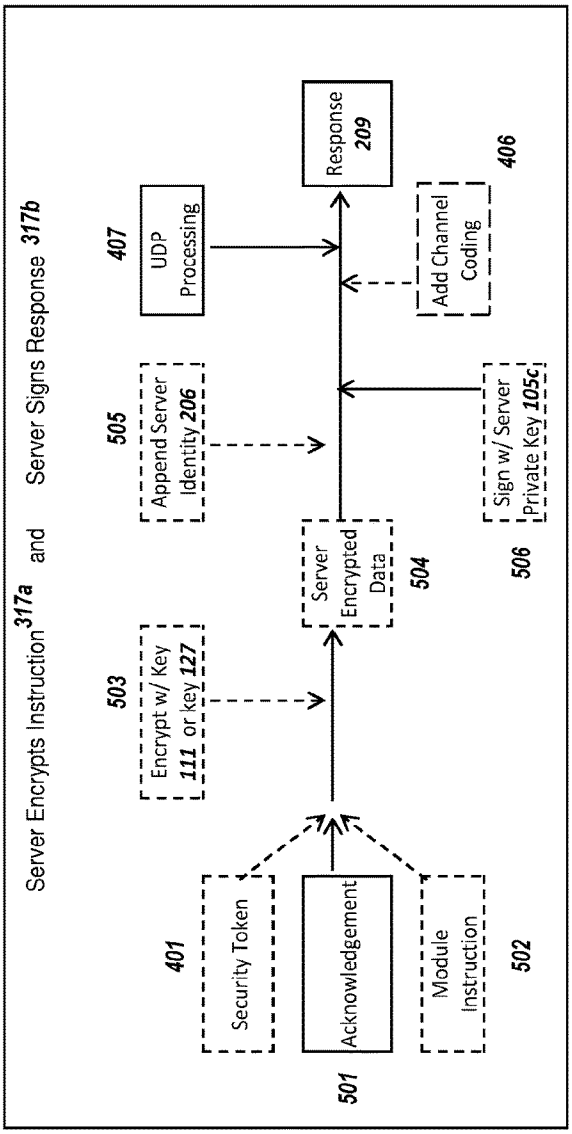

Figure 5a

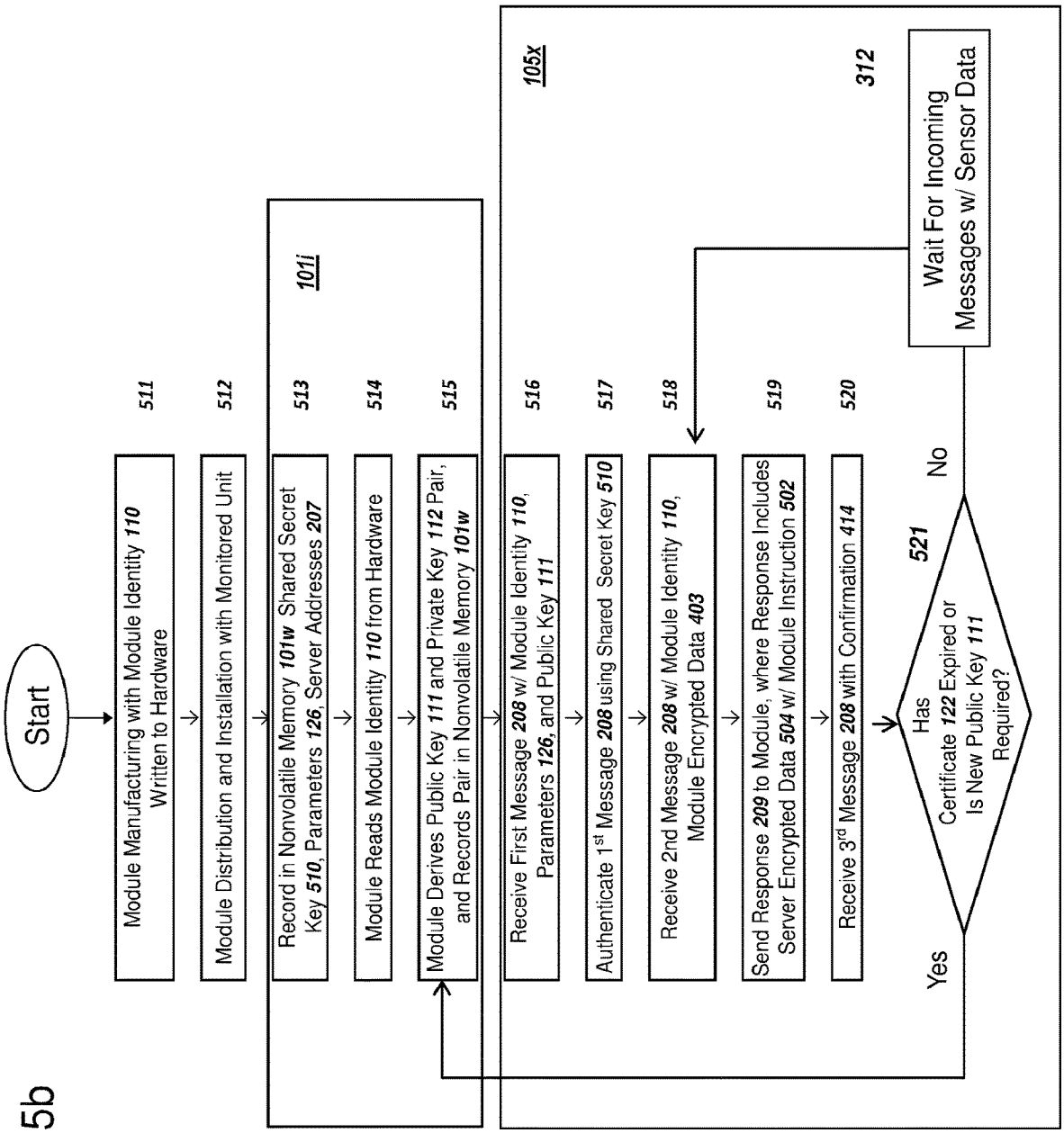
Start
Module Manufacturing with Module Identity 110 Written to Hardware
511
Module Distribution and Installation with Monitored Unit
512
101i
Record in Nonvolatile Memory 101w Shared Secret Key 510, Parameters 126, Server Addresses 207
513
Module Reads Module Identity 110 from Hardware
514
Module Derives Public Key 111 and Private Key 112 Pair, and Records Pair in Nonvolatile Memory 101w
515
105x
Receive First Message 208 w/ Module Identity 110, Parameters 126, and Public Key 111
516
Authenticate 1st Message 208 using Shared Secret Key 510
517
Receive 2nd Message 208 w/ Module Identity 110, Module Encrypted Data 403
518
Send Response 209 to Module, where Response Includes Server Encrypted Data 504 w/ Module Instruction 502
519
Receive 3rd Message 208 with Confirmation 414
520
Has Certificate 122 Expired or Is New Public Key 111 Required?
521
Yes
No
Wait For Incoming Messages w/ Sensor Data
312

Figure 5b

Figure 6a

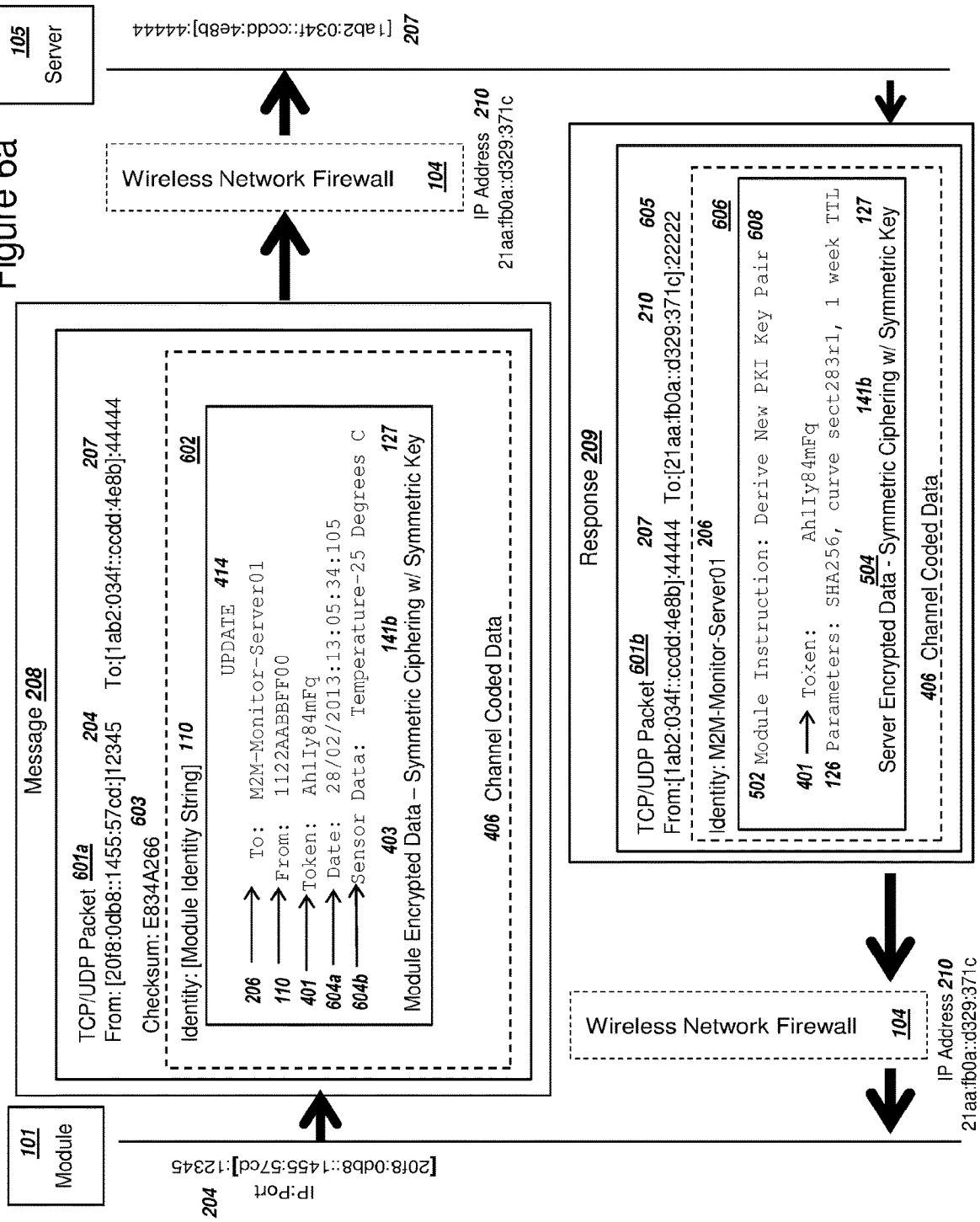
105 Server
[1ab2:034f::ccdd:4e8b]:44444
207
Wireless Network Firewall 104
IP Address 210
21aa:fb0a::d329:371c
Message 208
TCP/UDP Packet 601a 204 207
From: [20f8:0db8::1455:57cd:]12345 To:[1ab2:034f::ccdd:4e8b]:44444
Checksum: E834A266 603
Identity: [Module Identity String] 110 602
206 To: M2M-Monitor-Server01
110 From: 1122AABBFF00
401 Token: AhlIy84mFq
604a Date: 28/02/2013:13:05:34:105
604b Sensor Data: Temperature-25 Degrees C
UPDATE 414
403 141b 127
Module Encrypted Data – Symmetric Ciphering w/ Symmetric Key
406 Channel Coded Data
Response 209
TCP/UDP Packet 601b 207 210 605
From:[1ab2:034f::ccdd:4e8b]:44444 To:[21aa:fb0a::d329:371c]:22222
Identity: M2M-Monitor-Server01 206 606
502 Module Instruction: Derive New PKI Key Pair 608
401 Token: AhlIy84mFq
126 Parameters: SHA256, curve sect283r1, 1 week TTL
504 141b 127
Server Encrypted Data - Symmetric Ciphering w/ Symmetric Key
406 Channel Coded Data
Wireless Network Firewall 104
IP Address 210
21aa:fb0a::d329:371c
101 Module
IP:Port
[20f8:0db8::1455:57cd]:12345
204

Figure 6b

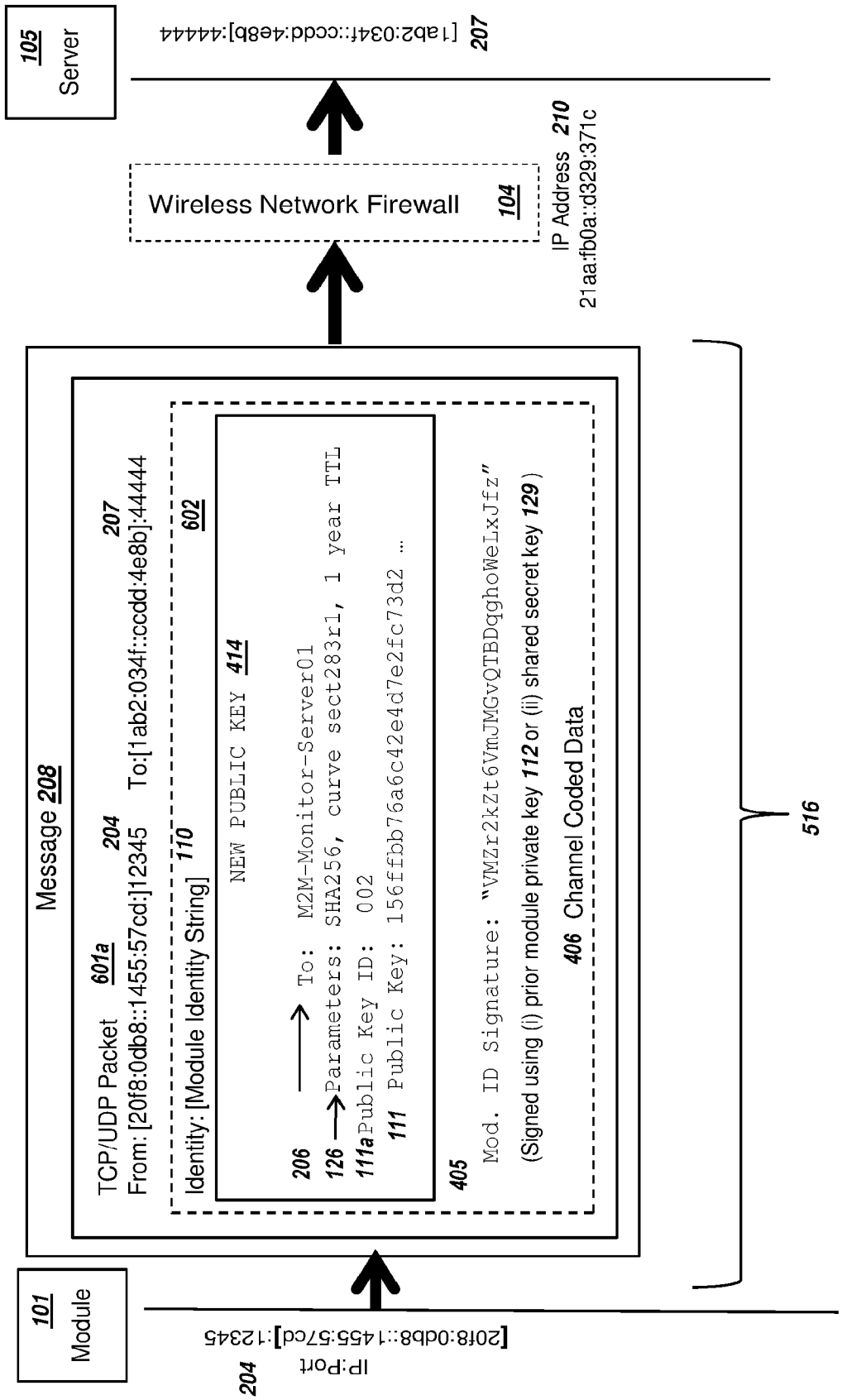
101
Module
204
IP:Port
[20f8:0db8::1455:57cd]:12345
Message 208
TCP/UDP Packet 601a
From: [20f8:0db8::1455:57cd:]12345 204
To:[1ab2:034f::ccdd:4e8b]:44444 207
Identity: [Module Identity String] 110
602
NEW PUBLIC KEY 414
206
126
To: M2M-Monitor-Server01
Parameters: SHA256, curve sect283r1, 1 year TTL
111a Public Key ID: 002
111 Public Key: 156ffbb76a6c42e4d7e2fc73d2 ...
405
Mod. ID Signature: "VMZr2kZt6VmJMGvQTBDqghoWeLxJfz"
(Signed using (i) prior module private key 112 or (ii) shared secret key 129)
406 Channel Coded Data
516
Wireless Network Firewall 104
IP Address 210
21aa:fb0a::d329:371c
105
Server
[1ab2:034f::ccdd:4e8b]:44444 207

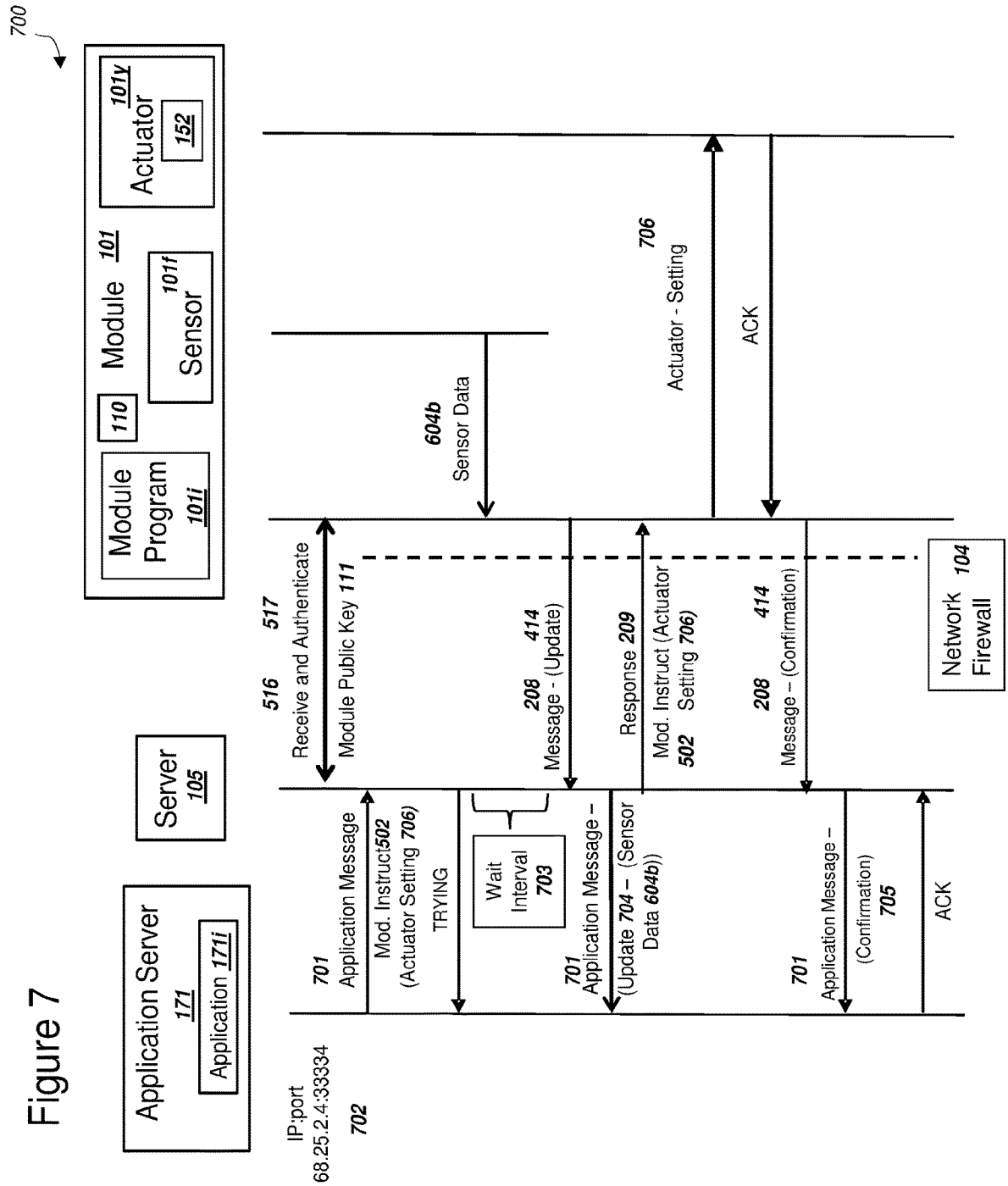
700
Module Program 101i
110
Module 101
Sensor 101f
Actuator 101y
152
Server 105
Application Server 171
Application 171i
IP:port 68.25.2.4:33334 702
701 Application Message
Mod. Instruct502 (Actuator Setting 706)
TRYING
516 Receive and Authenticate
517 Module Public Key 111
604b Sensor Data
Wait Interval 703
208 414 Message - (Update)
701 Application Message – (Update 704 – (Sensor Data 604b))
Response 209
Mod. Instruct (Actuator Setting 706) 502
706 Actuator - Setting
208 414 Message – (Confirmation)
701 Application Message – (Confirmation) 705
ACK
ACK
Network Firewall 104

Figure 7

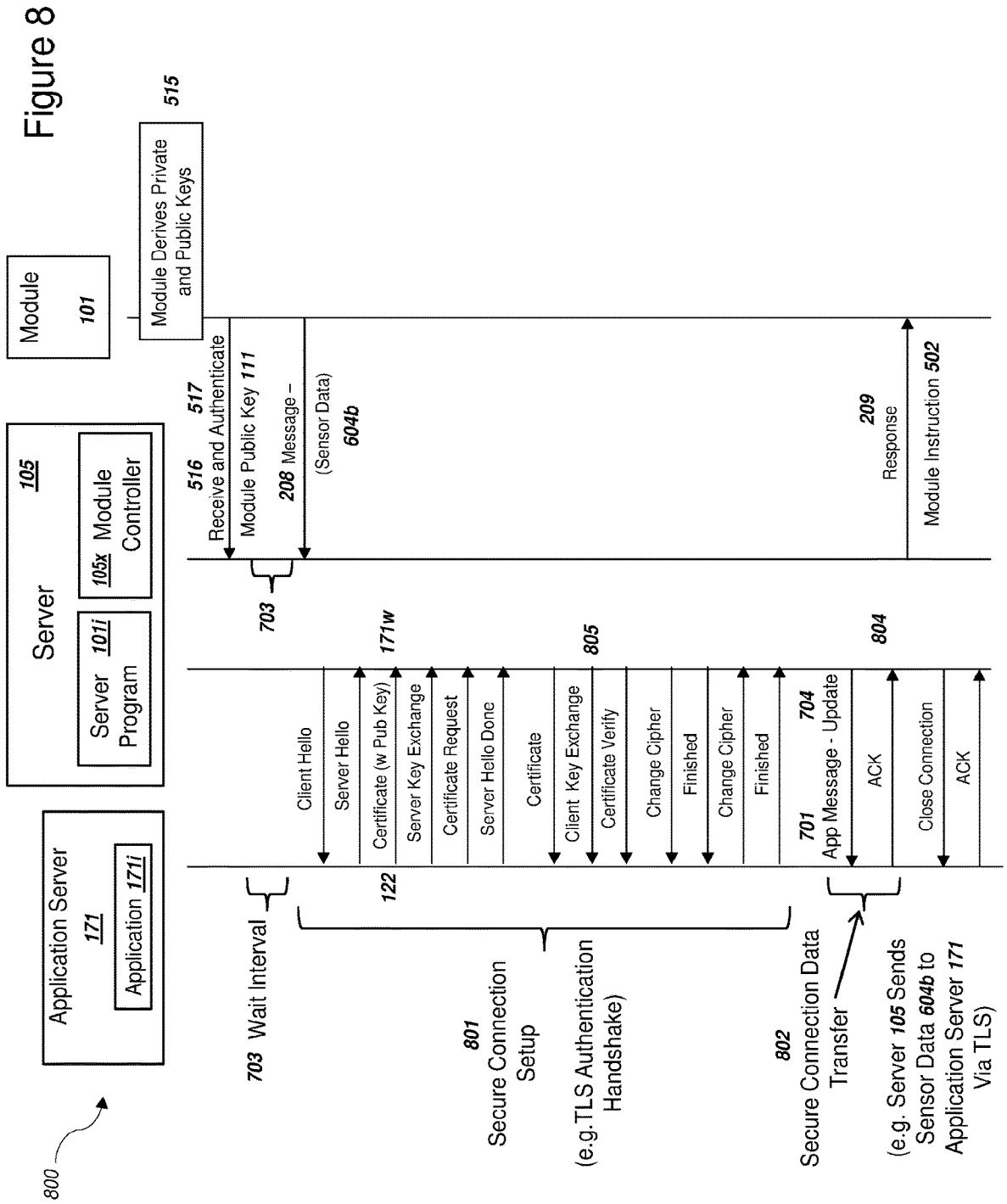
Figure 8
800
Application Server
171
Application 171i
Server
105
Server Program 101i
105x Module Controller
Module
101
Module Derives Private and Public Keys
515
516 Receive and Authenticate
517
Module Public Key 111
208 Message – (Sensor Data) 604b
703
209 Response
Module Instruction 502
703 Wait Interval
Client Hello
Server Hello
Certificate (w Pub Key)
171w
Server Key Exchange
Certificate Request
Server Hello Done
Certificate
Client Key Exchange
805
Certificate Verify
Change Cipher
Finished
Change Cipher
Finished
122
701 App Message - Update
704
ACK
804
Close Connection
ACK
801 Secure Connection Setup
(e.g.TLS Authentication Handshake)
802 Secure Connection Data Transfer
(e.g. Server 105 Sends Sensor Data 604b to Application Server 171 Via TLS)

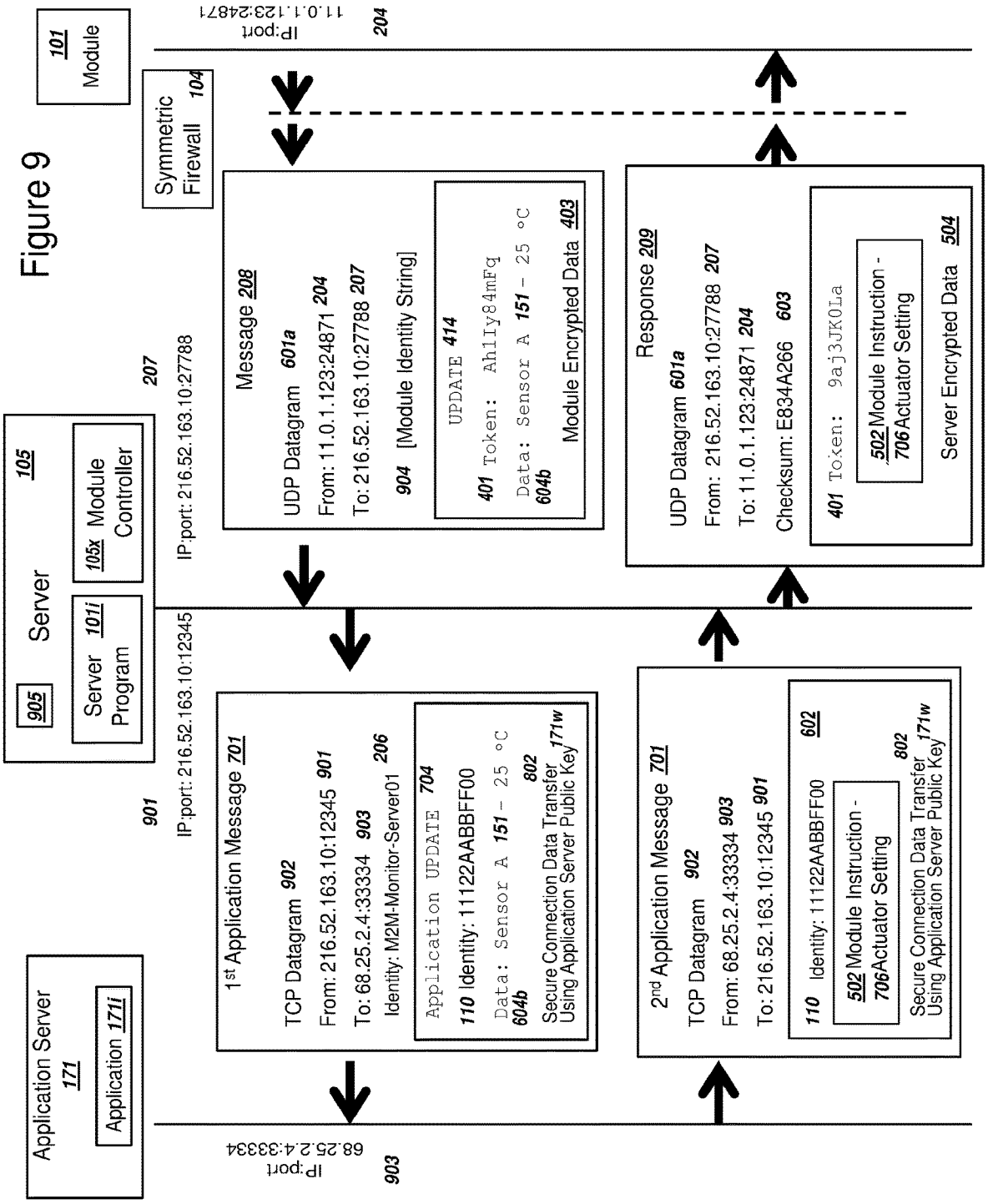
Figure 9
Application Server 171
Application 171i
IP:port 68.25.2.4:33334 903
1st Application Message 701
TCP Datagram 902
From: 216.52.163.10:12345 901
To: 68.25.2.4:33334 903
Identity: M2M-Monitor-Server01 206
Application UPDATE 704
110 Identity: 11122AABBFF00
Data: Sensor A 151 - 25 °C 604b
802 Secure Connection Data Transfer Using Application Server Public Key 171w
2nd Application Message 701
TCP Datagram 902
From: 68.25.2.4:33334 903
To: 216.52.163.10:12345 901
110 Identity: 11122AABBFF00 602
502 Module Instruction - 706 Actuator Setting
802 Secure Connection Data Transfer Using Application Server Public Key 171w
901
IP:port: 216.52.163.10:12345
905
Server 105
Server Program 101i
105x Module Controller
IP:port: 216.52.163.10:27788 207
Message 208
UDP Datagram 601a
From: 11.0.1.123:24871 204
To: 216.52.163.10:27788 207
904 [Module Identity String]
UPDATE 414
401 Token: Ah1Iy84mFq
Data: Sensor A 151 - 25 °C 604b
Module Encrypted Data 403
Response 209
UDP Datagram 601a
From: 216.52.163.10:27788 207
To: 11.0.1.123:24871 204
Checksum: E834A266 603
401 Token: 9aj3JK0La
502 Module Instruction - 706 Actuator Setting
Server Encrypted Data 504
Symmetric Firewall 104
IP:port 11.0.1.123:24871 204
101 Module

Figure 10

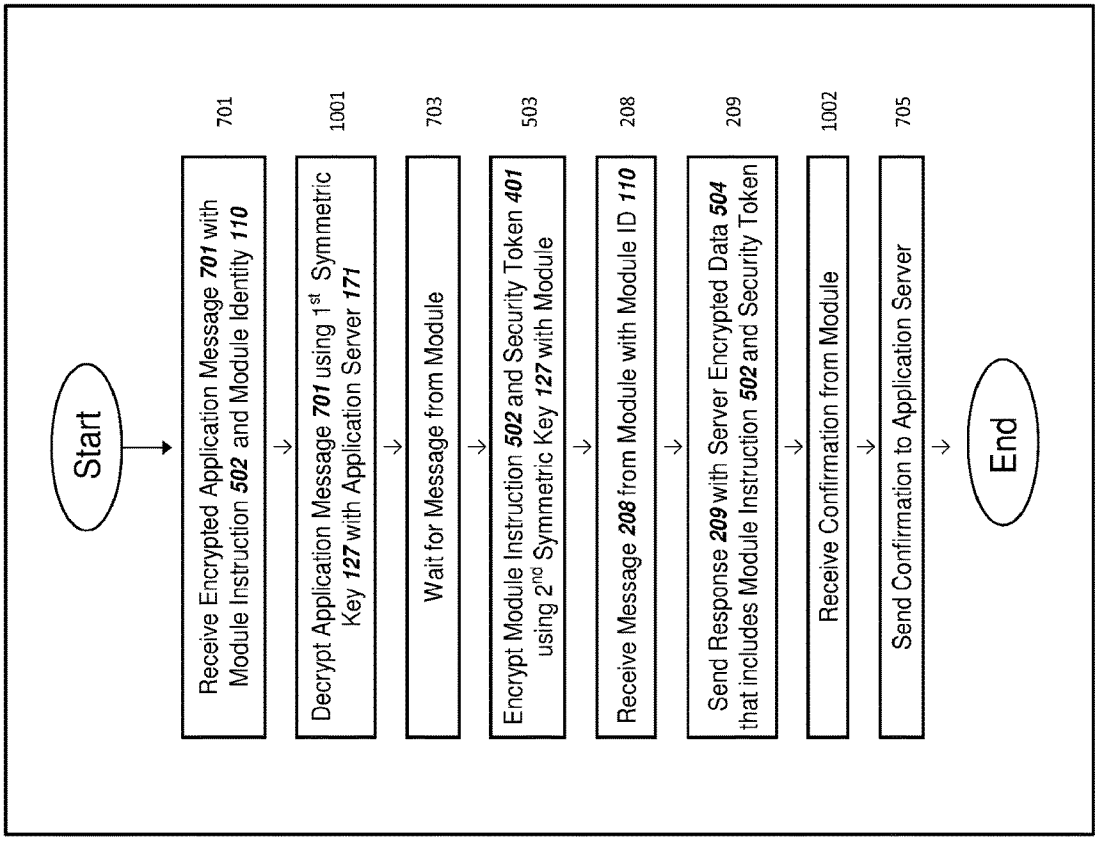
Start
Receive Encrypted Application Message 701 with Module Instruction 502 and Module Identity 110
701
Decrypt Application Message 701 using 1st Symmetric Key 127 with Application Server 171
1001
Wait for Message from Module
703
Encrypt Module Instruction 502 and Security Token 401 using 2nd Symmetric Key 127 with Module
503
Receive Message 208 from Module with Module ID 110
208
Send Response 209 with Server Encrypted Data 504 that includes Module Instruction 502 and Security Token
209
Receive Confirmation from Module
1002
Send Confirmation to Application Server
705
End

Figure 11

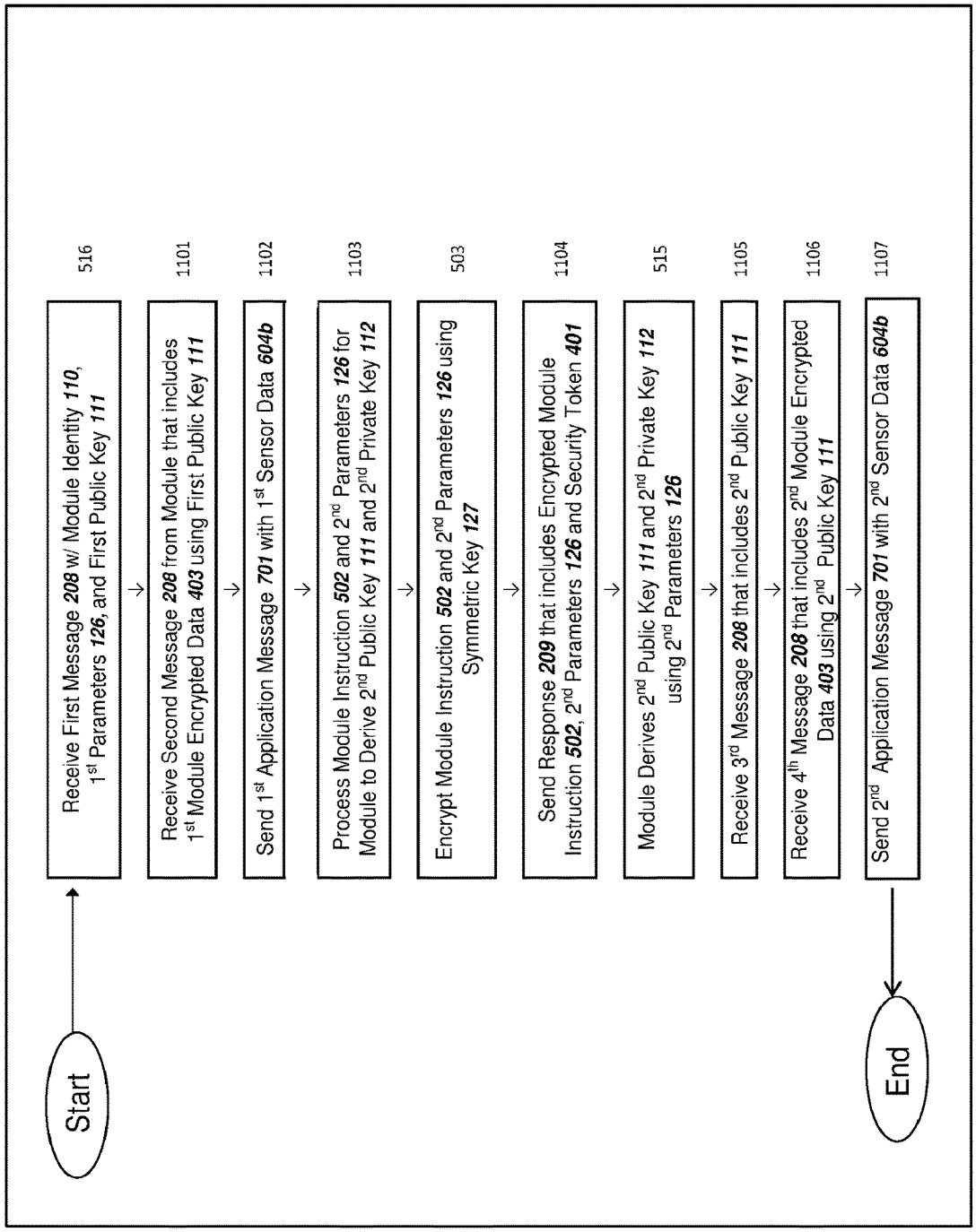
Start
Receive First Message 208 w/ Module Identity 110, 1st Parameters 126, and First Public Key 111
516
Receive Second Message 208 from Module that includes 1st Module Encrypted Data 403 using First Public Key 111
1101
Send 1st Application Message 701 with 1st Sensor Data 604b
1102
Process Module Instruction 502 and 2nd Parameters 126 for Module to Derive 2nd Public Key 111 and 2nd Private Key 112
1103
Encrypt Module Instruction 502 and 2nd Parameters 126 using Symmetric Key 127
503
Send Response 209 that includes Encrypted Module Instruction 502, 2nd Parameters 126 and Security Token 401
1104
Module Derives 2nd Public Key 111 and 2nd Private Key 112 using 2nd Parameters 126
515
Receive 3rd Message 208 that includes 2nd Public Key 111
1105
Receive 4th Message 208 that includes 2nd Module Encrypted Data 403 using 2nd Public Key 111
1106
Send 2nd Application Message 701 with 2nd Sensor Data 604b
1107
End

SYSTEMS AND METHODS FOR "MACHINE-TO-MACHINE" (M2M) COMMUNICATIONS BETWEEN MODULES, SERVERS, AND AN APPLICATION USING PUBLIC KEY INFRASTRUCTURE (PKI)

CROSS-REFERENCE TO RELATED APPLICATIONS

This is a continuation of U.S. patent application Ser. No. 17/647,812, filed on Jan. 12, 2022, U.S. patent application Ser. No. 16/593,561, filed Oct. 4, 2019, now U.S. Pat. No. 11,258,595, which is a continuation of U.S. patent application Ser. No. 16/036,506 filed Jul. 16, 2018, now U.S. Pat. No. 10,530,575, which is a continuation of U.S. patent application Ser. No. 15/583,968 filed May 1, 2017, now U.S. Pat. No. 10,057,059, which is a continuation of U.S. patent application Ser. No. 15/010,905 filed Jan. 29, 2016, now U.S. Pat. No. 9,641,327, which is a continuation of U.S. patent application Ser. No. 14/055,606 filed Oct. 16, 2013, now U.S. Pat. No. 9,276,740, each of which is fully incorporated by reference herein.

The subject matter of this application is related to the subject matter of U.S. patent application Ser. No. 14/023,181, filed Sep. 10, 2013, which issued as U.S. Pat. No. 9,350,550, in the name of John Nix, entitled "Power Management and Security for Wireless Modules in 'Machine-to-Machine' Communications," which is hereby incorporated by reference in its entirety.

The subject matter of this application is also related to the subject matter of U.S. patent application Ser. No. 14/039,401, filed Sep. 27, 2013, which issued as U.S. Pat. No. 9,288,059 in the name of John Nix, entitled "Secure PKI Communications for 'Machine-to-Machine' Modules, including Key Derivation by Modules and Authenticating Public Keys," which is hereby incorporated by reference in its entirety.

BACKGROUND

Technical Field

The present methods and systems relate to communications between wireless modules and a network, and more particularly, to efficient methods and systems for supporting secure, efficient, and flexible communications using Internet Protocol networks, where a server can communicate with both a "machine-to-machine" modules and an application.

Description of Related Art

The combination of "machine-to-machine" (M2M) communications and using low-cost sensors, Internet connections, and processors is a promising and growing field. Among many potential benefits, M2M technologies allow the remote monitoring of people, assets, or a location where manual monitoring is not economic, or costs can be significantly reduced by using automated monitoring as opposed to manual techniques. Prominent examples today include vending machines, automobiles, alarm systems, and remote sensors. Fast growing markets for M2M applications today include tracking devices for shipping containers or pallets, health applications such as the remote monitoring of a person's glucose levels or heartbeat, monitoring of industrial equipment deployed in the field, and security systems. Many M2M applications leverage either wired Internet connections or wireless connections, and both types of connections

continue to grow rapidly. M2M applications may also be referred to as "the Internet of things".

M2M communications can provide remote control over actuators that may be connected to a M2M device, such as turning on or off a power switch, locking or unlocking a door, adjusting a speed of a motor, or similar remote control. A decision to change or adjust an actuator associated with an M2M device can utilize one or a series of sensor measurements. An M2M device may also be referred to as a "wireless module" or also simply a module. As one example, if a building or room is too cold, then temperature can be reported to a central server by an M2M device and the server can instruct the M2M device to turn on a switch that activates heat or adjusts a thermostat. As the costs for computer and networking hardware continue to decline, together with the growing ease of obtaining either wired or wireless Internet access for small form-factor devices, the number of economically favorable applications for M2M communications grows.

Many M2M applications can leverage wireless networking technologies. Wireless technologies such as wireless local area networks and wireless wide area networks have proliferated around the world over the past 15 years, and usage of these wireless networks is also expected to continue to grow. Wireless local area network (LAN) technologies include WiFi and wireless wide area network (WAN) technologies include 3rd Generation Partnership Project's (3GPP) 3rd Generation (3G) Universal Mobile Telecommunications System (UMTS) and 4th Generation (4G) Long-term Evolution (LTE), LTE Advanced, and the Institute of Electrical and Electronics Engineers' (IEEE) 802.16 standard, also known as WiMax. The use of wireless technologies with "machine-to-machine" communications creates new opportunities for the deployment of M2M modules in locations without fixed-wire Internet access, but also creates a significant new class of problems that need to be solved. First, many wireless wide-area networking standards were designed and optimized for mobile phones, which may be continuously connected to the network during the day (i.e. non-sleeping hours for most subscribers while they may charge phones at night), in order to receive inbound phone calls and messages. In this case, the radio may be in an idle state but utilizing discontinuous reception, but the radio is still active and drawing power in order to receive and process incoming signaling from the network such as a Public Land Mobile Network (PLMN). A need exists in the art to make wireless M2M communications efficient in order to conserve battery life and radio-frequency spectrum resources.

Since the packets transmitted and received by a wireless module will likely traverse the public Internet for many applications, a need exists in the art to (i) prevent eavesdropping at intermediate points along the path of packets transmitted and received, (ii) allow endpoints to verify the identity of the source of packets received. A need exists in the art for a wireless module and a monitoring server to leverage established public key infrastructure (PKI) techniques and algorithms. A need exists in the art for communication to be secured without requiring the established, but relatively processing, bandwidth, and energy intensive security protocols, such as IPSec, Transport Layer Security (TLS), and Secure Socket Layer (SSL). The establishment of theses links requires extra overhead in the form of packet handshakes and/or key exchanges at levels including the network and transport layer of the traditional Open Systems Interconnection (OSI) model. M2M applications frequently require small, periodic messages sent between a wireless

module and a monitoring server, where the wireless module sleeps between the messages. M2M applications may leverage wired modules as well which also sleep between messages. During relatively long periods of sleep such as 30 minutes or more, the a wireless or wired network with intermediate firewalls will often tear down the network and/or transport layer connections, which means the wireless module would need to re-negotiate or reestablish the secure tunnels each time the wireless module wakes and seeks to send a relatively small message to a server. A need exists in the art for supporting established security protocols with an external application, without requiring them to be implemented on a module due to the relatively long periods of sleep and other complexities from inactivity in the module.

Next, a need exists in the art for the communication between a module and a monitoring server to be highly energy and bandwidth efficient in order to reduce energy consumption over the operating lifetime of a module. A limiting factor for a wireless module for M2M applications deployed or installed into the field is the lifetime of the battery of the wireless module. If the transmission techniques for the wireless module are not energy efficient, the system will require more frequent manual intervention for the replacement or recharging of batteries. If the battery becomes sufficiently low, then communication with the wireless module will be lost, or the frequency would have to be reduced for sensor measurements sent by the wireless module or actuator commands sent by a monitoring server. The energy saving techniques for transmitting and receiving data should leverage established Internet protocols, in order to utilize the public Internet, in addition to the need for secure communications noted above. For wired modules operating for years or decades, a significant cost will be the power consumed from land-line power.

Further, a need exists in the art for the secure, energy efficient communications that support Internet protocols to support intermediate firewalls that may exist along the path of packets sent and received by both a wireless module and a monitoring server. Without support for communication through an intermediate firewall, packets may be blocked by the firewall and the M2M application would not properly function in this case. A need exists in the art for techniques of secure and energy-efficient communications between modules and monitoring servers to support a wide variety of manufacturers of modules and M2M applications. Currently, there are dozens of manufacturers and form-factors of modules, and this diversity will continue to increase for the foreseeable future. By leveraging standards such as the Internet and PKI technologies, an efficient, secure, and highly scalable system of communicating could support the wide variety of modules.

In addition, the utilization of PKI technologies in modules can increase security, but a number of technical challenges must be addressed. These challenges increase if a deployed module required updated private/public key pairs after operation begins. The typical paradigm of "swapping out a SIM card" (which also depend on a pre-shared secret key Ki embedded in the card) with mobile phones may not be applicable or cost effective with modules, where swapping out the SIM card could be burdensome. A need exists in the art to allow for a deployed module to securely and automatically begin using new private and public keys (i.e. without human intervention such as swapping out a SIM card). Newer PKI technologies may offer a wide variety of algorithms for ciphering with public keys, and a need exists in the art for the utilization of new public and private keys to support the wide variety of algorithms, even after a module has been installed. In other words, a system should preferably both be highly secure and also flexible enough to adopt new security keys and standards. A need exists in the art for a scalable and secure method of associating a module identity with a module public key, when the module begins utilizing a new public key. A need exists in the art for a module to efficiently be able to utilize multiple public/private key pairs at the same time, such as with different service providers or different applications simultaneously.

Another desirable feature is for an M2M module to efficiently and securely communicate with applications. Applications can include a web-based interface for users to view status or input settings for a plurality of modules, and the modules may be associated with an M2M service provider. However, a set of PKI algorithms, keys, and communication protocols within used by the module for efficient communications module may not be directly compatible with an application. As one example, the application on a web server may prefer to use a transport layer security (TLS) protocol with transmission control protocol (TCP) datagrams, while for energy efficiency and to conserve battery life, an M2M module may prefer to use user datagram protocol (UDP). A need exists in the art for an intermediate server to securely translate secure communications to/from a module into secure communication from/to an application. As another example, it would be desirable for a module to support elliptic key cryptography (ECC), while the application may support RSA-based cryptography, and therefore a need exists in the art for a server to securely translate between the two cryptographic methods, thereby allowing the M2M module to communicate with the application.

And other needs exist in the art as well, as the list recited above is not meant to be exhaustive but rather illustrative.

SUMMARY

Methods and systems are provided for secure and efficient communication using a server to communicate with modules and an application. The modules and application can support "Machine to Machine" communications. The methods and systems contemplated herein can also support other applications as well, including mobile phone handsets connecting to a wireless network. An objective of the invention is to address the challenges noted above for securing the deployment of modules that utilize PKI algorithms and keys, as well as increasing efficiency in order to reduce power consumption, including extending the battery life of a module, if present. More efficient communication can also conserve valuable radio-frequency spectrum, among other benefits. Using a server for secure and reliable communication of data between an application and a module can increase the value and usefulness of modules for a user.

An exemplary embodiment may take the form of methods and systems for a server to securely receive data from a module and forward the data to an application server, and an application may operate on the application server. The application can include a graphical user interface for a user to visually see reports and/or control modules. The module, server, and application can preferably include a set of cryptographic algorithms for use in sending and receiving data. The cryptographic algorithms can include asymmetric ciphering algorithms, symmetric ciphering algorithms, secure hash algorithms, digital signature algorithms, key pair generation algorithms, a key derivation function, and/or a random number generator.

The module can utilize the set of cryptographic algorithms to securely generate or derive a module private key and a module public key. The module private key and module public key can be generated either (i) upon initial use or installation of the module, or (ii) at a subsequent time after initial use such as when a new set of key pairs are required or are useful for continued operation of the module. After deriving the module public key and module private key, the module private key is preferably recorded in a secure or protected location in a nonvolatile memory within the module. The module may then utilize the recorded pre-shared secret key to authenticate with a server that also records or has access to the pre-shared secret key. The authentication could comprise either using message digest with the pre-shared secret key, or using the pre-shared secret key as a symmetric ciphering key, and the authentication may also utilize a second key derived by both the module and the server using the pre-shared secret key. After authentication, the server can authoritatively record the derived module public key with the module identity in a database. Thus, the use of a pre-shared secret key can ensure the submitted module public key is validly associated with the module and module identity. The module can be associated with a monitored unit and the module can use a sensor to collect data regarding the monitored unit. The module may also optionally include an actuator for controlling a state of the monitored unit, although the actuator may optionally be omitted.

The server can include a private key associated with the server and the derived public key associated with the module. The server public key can leverage established public key infrastructure (PKI) standards, such as X.509 v3 certificates and RSA or elliptic curve cryptography (ECC) algorithms and include a digital signature from a certificate authority. The server can use a module controller and an operating system plus a connection to the Internet to monitor a socket for incoming messages from a module. After receiving the module public key, including potentially after a period of sleep or dormancy by the module, the server can receive a message, where the message includes a module identity and a module encrypted data. The module encrypted data can include a server instruction, a security token, and additional data such as a sensor measurement. The server can decrypt the module encrypted data using the received module public key and extract plaintext data from the module encrypted data.

The server can establish a secure connection with the application server using a secure connection setup, which could comprise the initial handshake messages for a transport-layer security protocol such as transport layer security (TLS) or IPSec. The secure connection setup can include the transfer of a server public key and an application server public key. The server can send an application message to the application server using a secure connection data transfer, where the application message includes data received from the module such as a sensor measurement or sensor data. The server can use (i) an RSA-based asymmetric ciphering algorithm and first public key with the application server to securely transfer a first symmetric key to the application server, and (ii) an ECC-based asymmetric ciphering algorithm and second public key with the module to securely transfer a second symmetric key to the module. The server may also preferably use a transmission control protocol (TCP) with the application server and a user datagram protocol (UDP) with the module. The application message to the application server can include a server identity, an encrypted update instruction, and the sensor data. The sensor data may also include a sensor identity. The server can use a first Internet protocol address and port (IP:port) number for receiving the message from the module and a second IP:port number for sending the application message to the application server. The application server can record the sensor data in an application database for subsequent processing and analysis for a user or other business or commercial needs.

In another embodiment, the module may be deployed within a wireless network such as a 4G LTE network or a WiFi network. The module can change state between a sleep state and an active state, wherein the sleep state may utilize a few milliwatts or less and the active state, including transmission of radio signals, may utilize several hundred milliwatts of power or more. After being installed next to a monitored unit, the wireless module can wake from a sleep or dormant state, utilize a sensor to collect data associated with the monitored unit, connect to the wireless network and the Internet, and send the sensor data to a server. During an active period, the module can use a UDP IP:port number to both send a message to the server and receive a response to the server. The message as a UDP datagram can be a UDP Lite datagram and with a checksum only applied to the packet header. A UDP Lite datagram with sensor data can include channel coding for the body of the datagram to mitigate the effect of bit errors. Or, a regular UDP packet could be sent in multiple copies in order to provide forward error correction.

In another embodiment of the present invention, the application server may send an application message to the server using a secure connection data transfer. The application message could be encrypted using a first server public key and could include a module identity and a module instruction. The module instruction can include an actuator setting, and also optionally an actuator identity (since the module may include multiple actuators). The server can decrypt encrypted data within the application message and record the module identity and module instruction in memory or a module database. Since the module can transition between periods of sleep and active states to conserve power, after receiving the application message the server can wait until a next message is received from the module with the module identity before sending the module instruction in a response. After waiting for the next message, the server can send the module instruction to the module in a server encrypted data using a second server public key. The first and second server public keys can use different cryptographic algorithms that are not directly compatible (i.e. the first server public key could be RSA-based and the second server public key could be ECC-based).

In another embodiment, the server can securely send the module a set of parameters, where the set of parameters includes values to define an equation for an elliptic curve. The values could comprise constants and variables such that the module can calculate a new elliptic curve, and the elliptic curve can be different than standard, published curves. The set of parameters could be sent from the server to the module in a server encrypted data, where the server encrypted data was processed using any of (i) a first module public key, (ii) a symmetric key, and (iii) a shared secret key. The module can use the set of parameters, a random number generator, and a key generation function within a cryptographic algorithms in order to generate a new key pair, which could comprise a second module public key and a second module private key. The module can securely and/or authoritatively

send the second module public key to the server, where the security includes the use of the first module public key and/or the shared secret key.

Continuing with this embodiment, after the server confirms the proper receipt of the second module public key in a response message, the server and the module can begin secure communications between them using the second module public key. By using this exemplary embodiment, security can be further increased with the server and module using an elliptic curve that can be unique, non-standard, or defined between them and security therefore increased. In this exemplary embodiment, the parameters to define the elliptic curve equation are sent securely to the module, so an observer along the flow of data could not observe the elliptic equation being used with a public key.

In yet another embodiment, the server can receive a first message with a module identity and a module encrypted data, where the first module encrypted data includes a first sensor measurement. The server can use a first module public key associated with a first module public key identity to decrypt the first module encrypted data. As one example, (a) the first module encrypted data could be ciphered with a symmetric key, and (b) the symmetric key could have been communicated using the first module public key (including using the first module public key to verify a module digital signature in a session where the symmetric key was transferred), and therefore (c) the module encrypted data could be encrypted using the first module public key. The server can also use a first server public key to decrypt the first module encrypted data, such as the symmetric key being derived using both the first module public key and the first server public key and a key derivation function within a cryptographic algorithms. The server can extract the first sensor measurement and send the data to an application server in an application message. The application message could be encrypted using a second server public key. The first and second server public keys can be different because they could each be associated with a different algorithm or defining equation.

Continuing with this embodiment, the server can send a module instruction and a set of parameters to the module, where the module is instructed to derive a new set of keys, and the module can subsequently derive a second module public key and a second module private key after receiving the module instruction. The module can then send the second module public key, a second module public key identity, and the module identity to the server. The server can receive a second module encrypted data that includes a second sensor data, where the second sensor data is encrypted using the second module public key. As one example, (a) the second module encrypted data could be ciphered with a symmetric key, and (b) the symmetric key could have been communicated using the second module public key (including using the second module public key to verify a module digital signature in a session where the symmetric key was transferred), and therefore (c) the module encrypted data could be encrypted using the second module public key. The server can extract the second sensor data using the second module public key. The server can use the second server public key to send a second application message with the second sensor data to the application server. Note that the module public key can change, but both (i) the second server public key used with the application server and also (ii) keys associated with the application server did not change. In this manner according to this embodiment, a module can derive a new public and private key while a server and application server can continue to communicate using existing public and private keys.

In another embodiment, the application server can use a module public key and an asymmetric ciphering algorithm to encrypt a module instruction. The application server can also include a digital signature of the module instruction using the application server private key. The encrypted module instruction and digital signature can be sent to a server in an application message, and the application message can also include an identity of the application server. The server can wait until a message is received from a module, and then send the encrypted module instruction and digital signature to the module in a response. The module can read receive the response, read the identity of the application server, select a public key of the application server, verify the digital signature of the module instruction, and decrypt the module instruction using the module private key. The module can then apply the module instruction and send a message with a confirmation. In this manner, the module may receive instructions from the application that are not decrypted by the server.

These as well as other aspects and advantages will become apparent to those of ordinary skill in the art by reading the following detailed description, with reference where appropriate to the accompanying drawings.

BRIEF DESCRIPTION OF THE DRAWINGS

Various exemplary embodiments are described herein with reference to the following drawings, wherein like numerals denote like entities.

FIG. **1***a* is a graphical illustration of an exemplary system, where a server and a module connect to the Internet, in accordance with exemplary embodiments;

FIG. **1***b* is a graphical illustration of hardware, firmware, and software components for a module, in accordance with exemplary embodiments;

FIG. **1***c* is a graphical illustration of hardware, firmware, and software components for a server, in accordance with exemplary embodiments;

FIG. **1***d* is a graphical illustration of hardware, firmware, and software components for an application server, in accordance with exemplary embodiments;

FIG. **1***e* is a graphical illustration of the components within a module, in accordance with exemplary embodiments;

FIG. **1***f* is a graphical illustration of the components within a server, in accordance with exemplary embodiments;

FIG. **1***g* is a graphical illustration of the components in a set of cryptographic algorithms, in accordance with exemplary embodiments;

FIG. **1***h* is an illustration of a certificate that includes a PKI public key, where the key comprises an elliptic curve cryptography (ECC) key, in accordance with exemplary embodiments;

FIG. **1***i* is a graphical illustration of an exemplary system that includes a user, an application, a set of servers, and a set of modules, in accordance with exemplary embodiments;

FIG. **2** is a graphical illustration of an exemplary system, where a module sends a message to a server, and where the server responds to the message, in accordance with exemplary embodiments;

FIG. **3** is a flow chart illustrating exemplary steps for a server to receive a message from a module, in accordance with exemplary embodiments;

FIG. **4** a is a flow chart illustrating exemplary steps for a server to process a message, including verifying a module's identity and decrypting data, in accordance with exemplary embodiments;

FIG. **5***a* is a flow chart illustrating exemplary steps for a server to process a response for a module, including sending and signing an module instruction, in accordance with exemplary embodiments;

FIG. **5***b* is a flow chart illustrating exemplary steps for a server to communicate with a module that has derived a public key and private key, in accordance with exemplary embodiments;

FIG. **6***a* is a simplified message flow diagram illustrating an exemplary message received by a server, and an exemplary response sent from the server, in accordance with exemplary embodiments;

FIG. **6***b* is a simplified message flow diagram illustrating an exemplary message received by a server, wherein the message includes a derived module public key, in accordance with exemplary embodiments;

FIG. **7** is a simplified message flow diagram illustrating an exemplary system with exemplary data transferred between a module and an application using a server, in accordance with exemplary embodiments;

FIG. **8** is a simplified message flow diagram illustrating an exemplary system with exemplary data transferred between a module and an application using a server, in accordance with exemplary embodiments;

FIG. **9** is a simplified message flow diagram illustrating exemplary data transferred between (i) a server and an application and between (ii) a server and a module, in accordance with exemplary embodiments;

FIG. **10** is a flow chart illustrating exemplary steps for a server to receive a module instruction within an application message, and for the server to send the module instruction to a module, in accordance with exemplary embodiments;

FIG. **11** is a flow chart illustrating exemplary steps for a server to communicate with an application and a module, in accordance with exemplary embodiments.

DETAILED DESCRIPTION OF EXEMPLARY EMBODIMENTS OF THE INVENTION

FIG. **1***a*

FIG. **1***a* is a graphical illustration of an exemplary system, where a server and a module connect to the Internet, in accordance with exemplary embodiments. The system **100** includes a module **101** operating within a wireless network **102**. System **100** can also include a module provider **109**, an Internet **107**, and an M2M service provider **108**, a certificate authority **118**, and a monitored unit **119**. M2M service provider **108** can include a server **105**. System **100** is illustrated without specific packet transmissions between module **101** and M2M service provider **108**. Examples of the communications and messages pertaining to the present invention will be illustrated in later Figures. As contemplated herein, machine-to-machine communications may comprise communication between a module **101** and a server **105**, such that data can be transferred between the two with minimal manual intervention, although manual intervention can be required to set up system **100** and any occasional manual maintenance required. As contemplated herein, machine-to-machine communications may also be referred to as "the Internet of things" (IoT). Also note that module **101** may comprise a wireless module, such that module **101** can communicate with wireless network **102** using a radio and an antenna. Thus, either a wireless or a wired configuration for module **101** can be utilized in the present invention.

If module **101** operates as a wireless module, module **101** and wireless network **102** can communicate using a base station **103**. Module **101** and wireless network **102** can utilize a variety of wireless technologies to communicate, including WiFi, WiMax, a 2nd generation wireless wide area network (WAN) technology such as General Packet Radio Services (GPRS) or Enhanced Data rates for GSM Evolution (EDGE), 3rd Generation Partnership Project (3GPP) technology such as 3G, 4G LTE, or 4G LTE Advanced, and other examples exist as well. A wired module **101** can connect to the Internet **107** via a wired connection such as an Ethernet, a fiber optic, or a Universal Serial Bus (USB) connection (not shown).

Generally, the communication techniques described herein can be independent of the network technologies utilized at the physical and data-link layers, so long as the underlying network provides access to the Internet **107** and supports Internet Protocols (IP). The Internet **107** can be an IPv4 or an IPv6 packet-switched based network that utilizes standards derived from the Internet Engineering Task Force, such as RFC 786 (User Datagram Protocol), RFC 793 (Transmission Control Protocol), and related protocols. The Internet **107** can be the public Internet comprising globally routable IP addresses, or a private network that utilizes private IP addresses. Although Internet **107** is illustrated as the globally routable public Internet in FIG. **1**, Internet **107** could also be a private Internet that is (i) not globally routable and (ii) only accessible to authorized modules and servers. As one example of a private Internet **107**, Internet **107** could use private IP addresses for nodes on the network, and in this case Internet **107** could be referred to as an intranet or private network. Alternatively, Internet **107** could be a private network layered on top of the publicly routable Internet via secured and encrypted connections. The specific numbers for IP addresses and port numbers shown in FIG. **1** and other figures are illustrative and any valid IP address or port number can be used, including an IPv4 and an IPv6 address.

When operating in a wireless network configuration, module **101** can access the Internet **107** via the wireless network **102**. In the wireless network configuration, module **101** can be a wireless handset, a cellular phone, a smartphone, a tablet computer, a laptop, a computer with a radio, a tracking device, or a circuit board with a radio that accesses wireless network **102**. Examples of wireless modules that utilize a wireless WAN such as 2G and 3G networking technologies include the Motorola® G24-1 and Huawei® MC323. Example manufacturers of wireless modules in 2012 include Sierra Wireless® and Telit®. In a wired configuration (not shown), module **101** can be a computer, security camera, security monitoring device, networked controller, etc. A more detailed depiction of exemplary components of a module **101** is included in FIG. **1***b* and FIG. **1***e* below. Module **101** could also comprise a "point of presence" payment terminal, such that a sensor associated with module **101** could collect payment information such as an account number from a credit card or similar payment card. Module **101** could communicate with the payment card via a magnetic reader or near-field wireless communications, and in this case the magnetic reader or antenna for near-field communications can function as a sensor. Module **101** could also operate as a "smartcard" such that an end user presents module **101** to merchants for payments.

Wireless network **102** may comprise either a wireless local area network (LAN) such as an 802.11 WLAN, Bluetooth, or Zigbee among other possibilities, and module **101** operating in wireless mode could communicate with a base station **103** of a wireless network **102** using a radio and an antenna. Wireless network **102** could operate as a Mode II device according to FCC Memorandum Opinion and Order (FC-12-36) and related white space regulation documents. If module **101** supports IEEE 802.15.4, then wireless network **102** could be a Zigbee network, an ISA100.11a standards-based network, or a 6LoWPAN network as described by IETF RFC 4944. Other possibilities exist as well for the wireless technology utilized by a wireless network **102** and module **101**, operating in a wireless mode, without departing from the scope of the present invention.

Module **101** can collect data regarding a monitored unit **119** and periodically report status to an M2M service provider **108** or a server **105**. Examples of a monitored unit **119** can include a vending machine, an alarm system, an automobile or truck, a standard 40-foot or 20-foot shipping container, or industrial equipment such as a transformer on an electrical grid or elevator in a building. Additional examples of a monitored unit **119** include can also include a pallet for shipping or receiving goods, an individual box of pharmaceuticals, a health monitoring device attached to a person such as a pacemaker or glucose monitor, and a gate or door for opening and closing. Other examples exist as well without departing from the scope of the present invention. Module **101** can utilize a sensor to measure and collect data regarding a parameter of monitored unit **119** such as temperature, physical location potentially including geographical coordinates from a Global Positioning System (GPS) receiver, radiation, humidity, surrounding light levels, surrounding RF signals, weight, vibration and/or shock, voltage, current, and/or similar measurements. If monitored unit **119** is a person or a health monitoring device associated with a person, then relevant health data could be recorded by module **101** in order to transmit to a M2M service provider **108**, which could be associated with a health service such as a hospital, doctor's office, or a similar health service. Module **101** could also periodically record a picture, image, or video of or around monitored unit **119**, using either visible or infrared light.

As illustrated in FIG. **1***a*, wireless network **102** may include a wireless network firewall **104** and M2M service provider **108** may include a server network firewall **124**. These firewalls may be used to secure communication at the data link, network, transport, and/or application layers of communications using the Internet **107**. Firewalls **104** and **124** could perform network address translation (NAT) routing or operate as symmetric firewalls, and selectively filter packets received through Internet **107** in order to secure system **100**. The firewall functionality of firewalls **104** and **124** could be of many possible types, including a symmetric firewall, a network-layer firewall that filters inbound packets according to pre-determined rules, an application-layer firewall, or a NAT router, as examples. Although a single firewall **104** and **124** is illustrated in wireless network **102** and with M2M service provider **108**, respectively, firewall **104** and **124** may each comprise multiple firewalls that operate in conjunction and the combined operation may be considered a single firewall **104** and **124**, respectively. Firewall **104** and/or firewall **124** can include a firewall port binding timeout value **117** (illustrated in FIG. **2**), which can represent the time allowed for an inbound packet from the Internet **107** to pass through firewall **104** or firewall **124** after module **101** or server **105**, respectively, sends a packet out. Firewall port binding timeout value **117** may be determined on a per-protocol basis, such as an exemplary time of 60 seconds for UDP packets and 8 minutes for TCP packets, although other time values for a firewall port binding timeout value **117** are possible as well. Inbound packets from Internet **107** to module **101** may be dropped by firewall **104** after a time exceeding firewall port binding timeout value **117** has transpired since the last packet transmitted by module **101**.

According to a preferred exemplary embodiment, module **101** may preferably record a module private key **112**. As described in additional figures below, module **112** can generate a key pair comprising a module private key **112** and a module public key **111**, where module private key **112** resides within module **101** and may not be shared or transmitted to other parties. Alternatively, the present invention also contemplates that module **101** does not derive its own module private key **112**, and rather module private key **112** is securely loaded or transmitted to module **101**. Module **101** may also be associated with a module provider **109**. Module provider **109** could be a manufacturer or distributor of module **101**, or may also be the company that installs and services module **101** or associates module **101** with monitored unit **119**. Although not illustrated in FIG. **1***a*, module provider **109** could deliver module **101** to an end-user, where the end-user associates module **101** with monitored unit **119**. Module provider **109** can record a module public key **111** and a certificate **122** (illustrated below in FIG. **1***e* and FIG. **1***h*) for module **101**. Module public key **111** may be associated with a module public key identity **11***a*, which could be an identifier of module public key **111**. Module **101** may utilize a plurality of module private keys **112** and module public keys **111** during the operation of a system **100**, although the use of a plurality of keys may not be required in order to use some embodiments of the invention contemplated herein.

As discussed below, a module **101** may utilize multiple module public keys **111** over the lifetime of module **101** (including multiple corresponding module private keys **112**), and module public key identity **111***a* can be used to select and/or identify the correct module public key **111**. Module public key identity **111***a* could be a string or sequence number uniquely associated with module public key **111**. As illustrated in FIG. **1***a*, module public key identity **11***a* may preferably not be included in the string or number comprising module public key **111**, but rather associated with the string or number comprising module public key **111**, and in this case the two together (module public key identity **11***a* and the string or number for module public key **111**) may be used to refer to module public key **111** as contemplated herein.

The module public key **111** can optionally be signed by a certificate authority **118** in order to confirm the identity of module **101** and/or the identity of module provider **109**. Alternatively, module provider **109** may have its own provider public key **120** and provider private key **121**. Module provider **109** may have its provider public key **120** signed by a certificate authority **118** and recorded in a certificate **122** (with an exemplary certificate **122** illustrated in FIG. **1***h* below), and then module provider **109** could sign module public key **111**. In this manner, module provider **109** can also function as a certificate authority **118** for module **101**. Thus, the validity of module public key **111** could be checked with module provider **109**, and the wireless module provider's **109** provider public key **120** could be checked against certificate authority **118**. Other configurations for signing

public keys and using certificates with public keys are possible as well without departing from the scope of the present invention.

Public keys and private keys as contemplated in the present invention, including module public key **111** and module private key **112** and additional keys described herein, may leverage established standards for Public Key Infrastructure (PKI). Public keys may be formatted according to the X.509 series of standards, such as X.509 v3 certificates, and subsequent or future versions, and these keys may be considered cryptographic keys. The keys can support standards such as the International Organization for Standardization (ISO) ISO/IEC 9594 series of standards (herein incorporated by reference) and the Internet Engineering Task Force (IETF) RFC 5280 titled "Internet X.509 Public Key Infrastructure Certificate and Certificate Revocation List (CRL) Profile" (herein incorporated by reference), including future updates to these standards.

Module public key **111** and module private key **112**, as well as the other private and public keys described within the present invention, could be generated using standard software tools such as Openssl, and other tools to generate public and private keys exist as well. Public and private keys as contemplated herein could be recorded in a file such as a *.pem file (Privacy-enhanced Electronic Mail), a file formatted according to Basic Encoding Rules (BER), Canonical Encoding Rules (CER), or Distinguished Encoding Rules (DER), or as text or binary file. Other formats for public and private keys may be utilized as well, including proprietary formats, without departing from the scope of the present invention. As contemplated herein, a key may also comprise either a public key or a private key. A public key as contemplated herein may also be considered a certificate or a public certificate. A private key as contemplated herein may also be considered a security key or a secret key.

Other configurations besides the one illustrated in FIG. **1***a* are possible as well. Server **105** could reside within wireless network **102** in a data center managed by wireless network **102**. Wireless network **102** could also operate as a module provider **109**. Although a single module **101** and server **105** are illustrated in FIG. **1***a*, system **100** could comprise a plurality of each of these elements. Module **101** could also record sensor data pertaining to a plurality of monitored units **119**. Module **101** could be mobile, such as physically attached to a truck or a pallet, and module **101** could connect to a series of different wireless networks **102** or base stations **103** as module **101** moves geographically. Other configurations are possible as well without departing from the scope of the present invention.

FIG. **1***b*

FIG. **1***b* is a graphical illustration of hardware, firmware, and software components for a module, in accordance with exemplary embodiments. FIG. **1***b* is illustrated to include many components that can be common within a module **101**, and module **101** may also operate in a wireless configuration in order to connect with a wireless network **102**. Module **101** may consist of multiple components in order to collect sensor data or control an actuator associated with a monitored unit **119**. In a wireless configuration, the physical interface **101***a* of module **101** may support radio-frequency (RF) communications with networks including a wireless network **102** via standards such as GSM, UMTS, mobile WiMax, CDMA, LTE, LTE Advanced, and/or other mobile-network technologies. In a wireless configuration, the physical interface **101***a* may also provide connectivity to local networks such as 802.11 WLAN, Bluetooth, or Zigbee among other possibilities. In a wireless configuration, module **101** could use a physical interface **101***a* be connected with both a wireless WAN and wireless LAN simultaneously. In a wired configuration, the physical interface **101***a* can provide connectivity to a wired network such as through an Ethernet connection or USB connection.

The physical interface **101***a* can include associated hardware to provide the connections such as radio-frequency (RF) chipsets, a power amplifier, an antenna, cable connectors, etc., and additional exemplary details regarding these components are described below in FIG. **1***e*. Device driver **101***g* can communicate with the physical interfaces **101***a*, providing hardware access to higher-level functions on module **101**. Device drivers **101***g* may also be embedded into hardware or combined with the physical interfaces. Module **101** may preferably include an operating system **101***h* to manage device drivers **101***g* and hardware resources within module **101**. The operating systems described herein can also manage other resources such as memory and may support multiple software programs operating on module **101** or server **105**, respectively, at the same time. The operating system **101***h* can include Internet protocol stacks such as a User Datagram Protocol (UDP) stack, Transmission Control Protocol (TCP) stack, a domain name system (DNS) stack, etc., and the operating system **101***h* may include timers and schedulers for managing the access of software to hardware resources. The operating system shown of **101***h* can be appropriate for a low-power device with limited memory and CPU resources (compared to a server **105**). An example operating system **101***h* for module **101** includes Linux, Android® from Google®, Windows® Mobile, or Open AT® from Sierra Wireless®. Additional example operating systems **101***h* for module **101** include eCos, uC/OS, LiteOs, and Contiki, and other possibilities exist as well without departing from the scope of the present invention.

A module program **101***i* may be an application programmed in a language such as C, C++, Java, and/or Python, and could provide functionality to support M2M applications such as remote monitoring of sensors and remote activation of actuators. Module program **101***i* could also be a software routine, subroutine, linked library, or software module, according to one preferred embodiment. As contemplated herein, a module program **101***i* may be an application operating within a smartphone, such as an iPhone® or Android®-based smartphone, and in this case module **101** could comprise the smartphone. The application functioning as a module program **101***i* could be downloaded from an "app store" associated with the smartphone. Module program **101***i* can include data reporting steps **101***x*, which can provide the functionality or CPU **101***b* instructions for collecting sensor data, sending messages to server **105**, and receiving responses from server **105**, as described in the present invention.

Many of the logical steps for operation of module **101** can be performed in software and hardware by various combinations of sensor **101***f*, actuator **101***y*, physical interface **101***a*, device driver **101***g*, operating system **101***h*, module program **101***i*, and data reporting steps **101***x*. When module **101** is described herein as performing various actions such as acquiring an IP address, connecting to the wireless network, monitoring a port, transmitting a packet, sending a message, receiving a response, or encrypting or signing data, specifying herein that module **101** performs an action can refer to software, hardware, and/or firmware operating within module **101** illustrated in FIG. **1***b* performing the action. Note that module **101** may also optionally include user interface **101***j* which may include one or more devices

for receiving inputs and/or one or more devices for conveying outputs. User interfaces are known in the art and generally are simple for modules such as a few LED lights or LCD display, and thus user interfaces are not described in detail here. User interface **101***j* could comprise a touch screen if module **101** operates as a smartphone or mobile phone. As illustrated in FIG. **1***b*, module **101** can optionally omit a user interface **101***j*, since no user input may be required for many M2M applications, although a user interface **101***j* could be included with module **101**.

Module **101** may be a computing device that includes computer components for the purposes of collecting data from a sensor **101***f* or triggering an action by an actuator **101***y*. Module **101** may include a central processing unit (CPU) **101***b*, a random access memory (RAM) **101***e*, and a system bus **101***d* that couples various system components including the random access memory **101***e* to the processing unit **101***b*. The system bus **101***d* may be any of several types of bus structures including a memory bus or memory controller, a peripheral bus, and a local bus using any of a variety of bus architectures including a data bus. Note that the computer components illustrated for the module **101** in FIG. **1***b* may be selected in order to minimize power consumption and thereby maximize battery life, if module **101** includes a battery and is not attached to external power. In addition, the computer components illustrated for the module **101** in FIG. **1***b* may also be selected in order to optimize the system for both long periods of sleep relative to active communications and also may be optimized for predominantly uplink (i.e. device to network) communications with small packets or messages. The computer components illustrated for the module **101** in FIG. **1***b* may also be general-purpose computing components, and specialized components are not required in order to utilize many of the embodiments contemplated herein.

Module **101** may include a read-only memory (ROM) **101***c* which can contain a boot loader program. Although ROM **101***c* is illustrated as "read-only memory", ROM **101***c* could comprise long-term memory storage chipsets or physical units that are designed for writing once and reading many times. As contemplated within the present invention, a read-only address could comprise a ROM **101***c* memory address or another hardware address for read-only operations accessible via bus **101***d*. Changing data recorded in a ROM **101***c* can require a technician have physical access to module **101**, such as removing a cover or part of an enclosure, where the technician can subsequently connect equipment to a circuit board in module **101**, including replacing ROM **101***c*. ROM **101***c* could also comprise a nonvolatile memory, such that data is stored within ROM **101***c* even if no electrical power is provided to ROM **101***c*. Although not illustrated in FIG. **1***b*, but illustrated in FIG. **1***e* below, module **101** could also include a flash memory **101***w*. A primary difference between flash memory **101***w* and RAM **101***e* may be that reading and writing operations to flash memory **101***w* can be slower whereas reading and writing operations to RAM **101***e* may be faster, and faster reading and writing operations to memory may be required for processing sensor **101***f* signals and securely communicating with a server **105**. For example, module program **101***i*, data reporting steps **101***x*, operating system **101***h*, or device driver **101***g* could be stored in flash memory **101***w* within module **101** when the module is powered off. These components and/or instructions could be moved from a flash memory **101***w* (not shown in FIG. **1***b* but shown in FIG. **1***e*) into RAM **101***e* when the module is powered on. In addition, portions of a RAM **101***e* can function as flash memory **101***w*, such that module program **101***i*, power control steps **101***x*, operating system **101***h*, or device driver **101***g* remain resident in random access memory even when the mobile module **101** is powered off, or powered off for the first time after module **101** is installed or becomes active in wireless network **102**. Note that ROM **101***c* could be optionally omitted or included in a memory unit within CPU **101***b* (not shown).

Although the exemplary environment described herein employs ROM **101***c* and RAM **101***e*, it should be appreciated by those skilled in the art that other types of computer readable media which can store data that is accessible by a module **101**, such as memory cards, subscriber identity module (SIM) cards, local miniaturized hard disks, and the like, may also be used in the exemplary operating environment without departing from the scope of the invention. The memory and associated hardware illustrated in FIG. **1***b* provide nonvolatile storage of computer-executable instructions, data structures, program modules, module program **101***i*, and other data for computer or module **101**. Note the module **101** may include a physical data connection at the physical interface **101***a* such as a miniaturized universal serial bus adapter, firewire, optical, or other another port and the computer executable instructions such as module program **101***i*, data reporting steps **101***x*, operating system **101***h*, or device driver **101***g* can be initially loaded into memory such as ROM **101***c* or RAM **101***e* through the physical interface **101***a* before module **101** is given to an end user, shipped by a manufacturer to a distribution channel, or installed by a technician. In addition, the computer executable instructions such as module program **101***i*, data reporting steps **101***x*, operating system **101***h* or device driver **101***g* could be transferred wirelessly to module **101**. In either case (wired or wireless transfer of computer executable instructions), the computer executable instructions such as module program **101***i*, data reporting steps **101***x*, operating system **101***h*, or device driver **101***g* could be stored remotely on a disk drive, solid state drive, or optical disk (external drives not shown).

A number of program modules may be stored in RAM **101***e*, ROM **101***c*, or possibly within CPU **101***b*, including an operating system **101***h*, device driver **101***g*, an http client (not shown), a DNS client, and related software. Program modules include routines, sub-routines, programs, objects, components, data structures, etc., which perform particular tasks or implement particular abstract data types. Aspects of the present invention may be implemented in the form of a module program **101***i* and/or data reporting steps **101***x* which are executed by the module **101** in order to provide remote monitoring using a sensor **101***f* and/or remote control using an actuator **101***y*. In addition, the module program **101***i* and/or data reporting steps **101***x* can include routines, sub-routines, and similar components to support secure and bandwidth and radio-frequency (RF) efficient communication with a server **105** utilizing the techniques described in the present invention. Further, the module program **101***i* and/or data reporting steps **101***x* can perform the various actions described in the present invention for the module **101** through instructions the module program **101***i* and/or data reporting steps **101***x* provide to the CPU **101***b*.

A user may enter commands and information into module **101** through an optional user interface **101***j*, such as a keypad, keyboard (possibly miniaturized for a mobile phone form-factor), and a pointing device. Pointing devices may include a trackball, an electronic pen, or a touch screen. A user interface **101***j* illustrated in FIG. **1***b* can also comprise the description of a user interface **101***j* within U.S. patent

application Ser. No. 14/039,401, filed Sep. 27, 2013 in the name of John Nix, which is herein incorporated in its entirety.

The module **101**, comprising a computer, may operate in a networked environment using logical connections to one or more remote computers, such as the server **105** illustrated in FIG. **1***a*. Server **105** can also function as a general purpose server to provide files, programs, disk storage, remote memory, and other resources to module **101** usually through a networked connection. Additional details regarding server **105** are provided in FIG. **1***c* below. Additional remote computers with which module **101** communicates may include another module **101** or mobile device, an M2M node within a capillary network, a personal computer, other servers, a client, a router, a network PC, a peer device, a base station **103**, or other common network node. The server **105** or a remote computer typically includes many of the elements described above relative to the module **101**, including a CPU, memory, and physical interfaces. It will be appreciated that the network connections shown throughout the present invention are exemplary and other means of establishing a wireless or wired communications link may be used between mobile devices, computers, servers, corresponding nodes, and similar computers.

The module program **101***i* and data reporting steps **101***x* operating within module **101** illustrated in FIG. **1***b* can provide computer executable instructions to hardware such as CPU **101***b* through a system bus **101***d* in order for a module **101** to (i) collect data from a sensor, (ii) change the state of an actuator **101***y*, and (iii) send or receive packets with a server **105**, thus allowing server **105** to remotely monitor or control a monitored unit **119**. The module program **101***i* and/or data reporting steps **101***x* can enable the module **101** to transmit or send data from sensor **101***f* or module **101** by recording data in memory such as RAM **101***e*, where the data can include sensor data, a destination IP:port number, a packet or packet header value, an encryption or ciphering algorithm and key, a digital signature algorithm and key, etc. The data recorded in RAM **101***e* can be subsequently read by the operating system **101***h* or the device driver **101***g*. The operating system **101***h* or the device driver **101***g* can write the data to a physical interface **101***a* using a system bus **101***d* in order to use a physical interface **101***a* to send data to a server **105** using the Internet **107**. Alternatively, the module program **101***i* and/or data reporting steps **101***x* can write the data directly to the physical interface **101***a* using the system bus **101***d*.

The module program **101***i* and/or data reporting steps **101***x*, or operating system **101***h* can include steps to process the data recorded in memory such as encrypting data, selecting a destination address, or encoding sensor data acquired by (i) a sensor **101***f* or (ii) through a physical interface **101***a* such as a thermocouple, shock or vibration sensor, light sensor, or global positioning system (GPS) receiver, etc. The module **101** can use the physical interface **101***a* such as a radio to transmit or send the data from a sensor to a base station **103**. For those skilled in the art, other steps are possible as well for a module program **101***i* or operating system **101***h* to collect data from a sensor **101***f* and send the data in a packet without departing from the scope of the present invention.

Conversely, in order for module **101** to receive a packet or response from server **105**, the physical interface **101***a* can use a radio to receive data from a base station **103**. The received data can include information from a server **105** and may comprise a datagram, a source IP:port number, a packet or header value, an instruction for module **101**, an acknowledgement to a packet that module **101** sent, a digital signature, and/or encrypted data. The operating system **101***h* or device driver **101***g* can use a system bus **101***d* and CPU **101***b* to record the received data in memory such as RAM **101***e*, and the module program **101***i* or operating system **101***h* may access the memory in order to process the received data and determine the next step for the module **101** after receiving the data. Processing the received data could include deciphering or decrypting received data with a key, verifying a digital signature with a key, reading an instruction from a server **105**, or similar transformations of the received data. The steps within this paragraph may also describe the steps a module program **101***i* or data reporting steps **101***x* can perform in order to receive a packet. For those skilled in the art, other steps are possible as well for a module program **101***i*, data reporting steps **101***x*, or module **101** to receive a packet or response from a server **105** without departing from the scope of the present invention.

Moreover, those skilled in the art will appreciate that the present invention may be implemented in other computer system configurations, including hand-held devices, netbooks, portable computers, multiprocessor systems, microprocessor based or programmable consumer electronics, network personal computers, minicomputers, mainframe computers, and the like. The invention may also be practiced in distributed computing environments, where tasks are performed by remote processing devices that are linked through a communications network. In a distributed computing environment, program modules may be located in both local and remote memory storage devices. In addition, the terms "mobile node", "mobile station", "mobile device", "M2M module", "M2M device", "networked sensor", or "industrial controller" can be used to refer to module **101** or its functional capabilities of (i) collecting sensor data regarding a monitored unit **119**, (ii) changing state of an actuator **101***y* associated with monitored unit **119**, and/or (iii) communicating the data associated with a monitored unit **119** with a wireless network **102**. The function of module **101** and sensor **101***f* could be integrated, and in this case module **101** could also be referred to as a "sensor", "intelligent sensor", or "networked sensor". Further, the term "module" or "monitoring device" can be used to refer to the module program **101***i* when module program **101***i* provides functional capabilities such as reporting data from a sensor **101***f* to a server **105** or receiving instructions for an actuator **101***y* from a server **105**. The device driver **101***i*, operating system **101***i*, and/or module program **101***i* could optionally be combined into an integrated system for providing the module **101** functionality. Other possibilities exist as well for the configuration or combination of components illustrated in FIG. **1***b* without departing from the scope of the present invention.

FIG. **1***c*

FIG. **1***c* is a graphical illustration of hardware, firmware, and software components for a server, in accordance with exemplary embodiments. The illustrated components for the server **105** in FIG. **1***c* include a central processing unit (CPU) **105***b*, a random access memory (RAM) **105***e*, a system bus **105***d*, storage **105***m*, an operating system **105***h*, and a module controller **105***x*. These elements can provide functions equivalent to the central processing unit (CPU) **101***b*, RAM **101***e*, system bus **101***d*, flash memory **101***w*, and an operating system **101***h* described above in FIG. **1***b*, respectively. In general, a server **105** can have higher-end components such as a larger CPU **105***b* and greater RAM **105***e* in order to support communications with a plurality of modules **101**. Server **105** can comprise a general purpose

computer such as a rack mounted server within a data center or rack, or could also comprise a desktop computer or laptop. Server **105** could also be a specialized computer, with hardware and software selected for supporting a plurality of modules **101** connecting and communicating simultaneously. Operating system **101***h* can comprise an operating system appropriate for a server such as Linux, Solaris®, or Windows® Server. Server **105** can preferably have a wired Ethernet connection with high bandwidth that is persistently connected to the Internet **107** illustrated in FIG. **1***a*, while the Internet **107** connection for module **101** may be transient as module **101** changes between sleep and active states. Module controller **105***x* can provide the server-side logic for managing communications and controlling module **101** using a module database **105***k*. Server program **105***i* can provide functionality for communicating with external servers or nodes, such as an application server **171** illustrated in FIG. **1***d*.

A module controller **101***x* and server program **105***i* may be applications programmed in a language such as C, C++, Java, or Python and could provide functionality to support M2M applications such as remote monitoring of sensors and remote activation of actuators. Module controller **105***x* and server program **105***i* could also be software routines, subroutines, linked libraries, or software modules, according to preferred embodiments. Many of the logical steps for operation of server **105**, module controller **105***x*, and/or server program **105***i* can be performed in software and hardware by various combinations of physical interface **105***a*, system bus **105***d*, device driver **105***g*, and operating system **105***h*. When server **105** is described herein as performing various actions such as acquiring an IP address, monitoring a port, transmitting or sending a packet, receiving a message, or encrypting or signing a message, specifying herein that server **105** performs an action can refer to software, hardware, and/or firmware operating within server **105** performing the action.

The server **105** may also include a user interface **105***j* such as a display (not shown) which could also comprise any type of display devices such as a liquid crystal display (LCD), a plasma display, and an organic light-emitting diode (OLED) display, or a cathode ray tube (CRT). A user interface **105***j* for the server **105** may optionally be provided remotely such as (i) via a web browser or a secure terminal such as secure shell (SSH) with (ii) another computer operated by an administrator (not shown). A user or administrator may enter commands and information into server **105** through a user interface **105***j*, such as a keypad, keyboard, and a pointing device. Pointing devices may include a trackball, an electronic pen, or a touch screen. In addition, the server **105** may store computer executable instructions such as module controller **105***x* or server program **105***i* on storage **105***m*. Storage **105***m* may comprise a disk drive, a solid-state drive, an optical drive, or a disk array. Module controller **101***x* can manage communications with module **101** and may be downloaded and installed on the server **105**. As noted previously and elsewhere herein, module program **101***i* and module controller **105***x* can preferably interoperate with each other in order to collect sensor data and control an actuator associated with a monitored unit **119**.

The server program **105***i* and/or module controller **101***x* operating within server **105** illustrated in FIG. **1***c* can provide computer executable instructions to hardware such as CPU **105***b* through a system bus **105***d* in order to (i) receive a message from the module **101** and (ii) send a response, wherein the message can include sensor **101***f* data and the response can include an acknowledgement of the message and/or an instruction to the module **101**. The module controller **105***x* can enable the server **105** to send a response to a message from module **101** by recording data associated with module **101** in memory such as RAM **105***e*, where the data can include an instruction from module **101**, a destination IP:port number, a packet or packet header value, and the data can be processed using an encryption or ciphering algorithm or key, a digital signature algorithm or key, etc.

The server program **105***i* can enable (a) the server **105** to send a datagram, packet, or an application message to an application server **171** by (b) recording data associated (i) a with module **101** or (ii) other M2M service control information in memory such as RAM **105***e*, where the data can include information from module **101**, a destination IP:port number, a packet or packet header value, and the information could be processed using an encryption or ciphering algorithm or key, a digital signature algorithm or key, etc. The operating system **105***h* or the device driver **105***g* can write the data from RAM **105***e* to a physical interface **105***a* using a system bus **105***d* and an Ethernet connection in order to send the data via the Internet **107** illustrated in FIG. **1***a*. Alternatively, the software program **105***i* and/or module controller **105***x* can write the data directly to the physical interface **105***a* using the system bus **105***d*.

The server **105** can utilize the physical interface **105***a* to receive data from a module **101** and/or application **171***i* using a local area network such as Ethernet, although the physical interface **105***a* of server **105** could also utilize a wireless connection. The server **105** can listen for data from the Internet **107** using port number and/or a TCP/UDP socket. The received data from a module **101** can be a message formatted according to an Internet packet or datagram or series of datagrams inside Ethernet packets and include information from a module **101** such as a source IP address and port number, an identity of the module, sensor data that may be encrypted, and/or a digital signature of the module. The received data from application **171***i* can comprise a series of datagrams formatted according to Internet Protocol and/or datagrams inside Ethernet packets. The received data or message from application **171***i* can include information regarding application **171***i* and/or server **105**, such as a source IP address and port number associated with application **171***i* or application server **171**, an identity of the server, actuator instructions or commands for a module **101** that may be encrypted, and a digital signature associated with the application **171***i*.

When server **105** receives messages or data, the operating system **105***h* or device driver **105***g* can record the received data from module **101** or application **171***i* via physical interface **105***a* into memory such as RAM **105***e*. The server program **105***i* or operating system **105***h* may subsequently access the memory in order to process the data received. The server program **105***i* and/or module controller **105***x*, or operating system **105***h* can include steps to process the data recorded in memory and received from the module **101** or application **171***i*, such as parsing the received packet, decrypting data, verifying a digital signature with a key, or decoding sensor data included in a message from the module.

The server **105** and/or server program **105***i* may communicate with application **171***i* by sending and receiving packets over a LAN or the Internet **107**, using a physical interface **105***a* and a wired connection such as Ethernet or possibly a wireless connection as well. The server **105** can use the physical interface **105***a* such as an Ethernet connection to send and receive the data from the Internet **107**. For those skilled in the art, other steps are possible as well for a server

program **105***i* or operating system **105***h* within a server **105** to (i) send/receive a packet or message to/from a module **101** and (ii) send/receive a packet or message to/from an application **171***i* without departing from the scope of the present invention. Server program **105***i* and module controller **105***x* may optionally be combined within a server **105**, or alternatively distributed across different physical computers and function in a coordinated manner using a network.

The device drivers **105***g*, operating systems **105***h*, and/or module controller **105***x* could also optionally be combined into an integrated system for providing the server **105** functionality. Although a single physical interface **105***a*, device-driver set **105***g*, operating system **105***h*, module controller **105***x*, server program **105***i*, and user interface **105***j* are illustrated in FIG. **1***c* for server **105**, server **105** may contain multiple physical interfaces, device drivers, operating systems, software programs, module programs, and/or user interfaces. Server **105** may operate in a distributed environment, such that multiple computers operate in conjunction through a network to provide the functionality of server **105**. Also, server **105** may operate in a "virtualized" environment, where server **105** shares physical resources such as a physical CPU **105***b* with other processes operating on the same computer. And other arrangements could be used as well, without departing from the invention.

FIG. **1***d*

FIG. **1***d* is a graphical illustration of hardware, firmware, and software components for an application server, in accordance with exemplary embodiments. Application server **171** can include application **171***i*. Application **171***i* can comprise a computer program or collection of computer programs, for managing a plurality of modules **101** using one or more servers **105**. Application **171***i* can include a web portal **171***j*, service controller **171***x*, an application database **171***k*, and cryptographic algorithms **141**. During operation, such as when application **171***i* processes data from/to modules **101** through server **105**, application **171***i* may reside in RAM **171***e* within an application server **171**. Application **171***i* and the associated computer programs may be recorded in storage **171***m* so that they may be loaded by operating system **171***h* upon the startup of application server **171**. Web portal **171***j* can comprise a web server such as Apache and can provide a user interface for a remote user accessing application **171***i* via an Internet **107**. The web portal **171***j* could include web pages for viewing reports from modules **101** and/or servers **105**, and also inputting settings for modules **101** by a user. The web pages could include PUP, active server pages, or Java components, in addition to other elements. Data input and stored by application **171***i* can be recorded in application database **171***k*. The data could be inserted or queried using structured query language (SQL) statements. Cryptographic algorithms **141** which may comprise a suite of algorithms or subroutines that can be utilized for (i) deriving a pair of keys comprising a public key and a private key, (ii) encrypting data using public keys, (iii) decrypting data using private keys, (iv) processing secure hash signatures using private keys, and (v) verifying secure hash signatures using public keys, and related software, firmware, or subroutines for implementing a cryptographic system, and cryptographic algorithms **141** are also depicted and described in connection with FIG. **1***g* below.

Application **171***i* may be processed by an application server **171** using a CPU **171***b*. The illustrated components for the application server **171** in FIG. **1***d* include a central processing unit (CPU) **171***b*, a random access memory (RAM) **171***e*, a system bus **171***d*, storage **171***m*, an operating system **171***h*, and an application **171***i*. These elements can provide functions equivalent to the central processing unit (CPU) **105***b*, RAM **105***e*, system bus **105***d*, storage **105***m*, and an operating system **105***h* described above in FIG. **1***c*, respectively. Application server **171** can comprise a general purpose computer such as a rack mounted server within a data center or rack, or could also comprise a desktop computer or laptop. Application server **171** could also be a specialized computer, with hardware and software selected for supporting a plurality of servers **105** or modules **101** connecting and communicating simultaneously. Operating system **171***h* can comprise an operating system appropriate for a server such as Linux, Solaris®, or Windows® Server. Application server **171** can preferably have a wired Ethernet connection with high bandwidth that is persistently connected to the Internet **107**.

An application **171***i* and/or service controller **171***x* may be an application programmed in a language such as C, C++, Java, or Python and could provide functionality to support M2M applications such as remote monitoring of sensors and remote activation of actuators. Application **171***i* can include a service controller **171***x*. Application **171***i* and/or service controller **171***x* could also be a software routine, subroutine, linked library, or software module, according to one preferred embodiment. Application **171***i* can include a service controller **171***x*, which can provide the functionality or CPU **171***b* instructions for the service controller **171***x* described in the present invention. Service controller **171***x* can include (i) logic for processing alarms from a module **101** (such as sending out and email or text message to a user), (ii) logic for adjusting actuator **101***y* settings based upon data from sensor **101***f*, (iii) accepting user input (possibly via web portal **171***j*) and then making an associated change in an actuator **101***y* setting. Service controller **171***x* can also accept input from external applications (not shown) in order to make decisions regarding module **101**, sensor **101***f*, and/or actuator **101***y*.

Service controller **171***x* could be included within an enterprise resource planning (ERP) solution such as SAP® or Oracle® ERP. An external application (not shown) can communicate with the application server **171**. As one example, a group of modules **101** could be installed within a manufacturing plant, and when a customer order was entered into the external application such as ERP, the service controller **171***x* could provide instructions for a group of modules **101** to server **105**, such as changing actuators **101***y* to operate a production line. Other possibilities for service controller **171***x* exist as well without departing from the scope of the present invention. In general, service controller **171***x* can manage the overall function of a group of modules **101** through server **105**. Service controller **171***x* may operate at the "user layer" and/or "application layer" of the traditional OSI model.

Many of the logical steps for operation of application server **171** or application **171***i* can be performed in software by various combinations of physical interface **171***a*, device driver **171***g*, operating system **171***h*, and module controller **105***i*, where application **171***i* communicates with module controller **105***i* over a network. Application **171***i* and module controller **105***i* can communicate using an application message **701** (illustrated in FIG. **7** below). When application **171***i* is described herein as performing various actions such as acquiring an IP address, monitoring a port, transmitting or sending a packet or message, or encrypting or signing a message, receiving a packet or message, specifying herein that application **171***i* and/or application server **171** performs an action can refer to software, hardware, and/or firmware operating within application server **171** performing the

action. Application server **171** or application **171***i* can send or transmit a message, packet, or data using the steps depicted and described in connection with FIG. **1***c* for a server **105** to send or transmit a message, packet, or data. Application server **171** or application **171***i* can receive a message, packet, or data using the steps depicted and described in connection with FIG. **1***c* for a server **105** to receive a message, packet, or data. Application server **171** can utilize hardware components similar to server **105**, such as storage **171***m* can be similar to storage **105***m*, CPU **171***b* can be similar to CPU **105***b*, and physical interface **171***a* can be similar to physical interface **105***a*. Application server **171** can use a system bus **171***d* to connect the hardware components shown within application server **171**, and system bus **171***d* can be similar to system bus **105***d* depicted and described in connection with FIG. **1***c* above.

Application server **171** may also comprise a collection of individual computers, where the individual computers could be either centrally located or geographically dispersed, but the individual computers may function in a coordinated manner over a network to operate as an application server **171**. In a similar manner, application **171***i* may be distributed across a plurality of computers, such as in a cloud computing configuration. Application server **171** may be a "virtualized" server, with computing resources shared with other processes operating on a computer.

FIG. **1***e*

FIG. **1***e* is a graphical illustration of the components within a module, in accordance with exemplary embodiments. FIG. **1***e* is illustrated to show a combination of components useful for leveraging the efficient and secure communication techniques described in the present invention. In addition to the components illustrated in FIG. **1***b* above, module **101** can include a battery **101***k*, a server public key **114**, a wireless module private key **112**, a connection to an actuator **101***y*, a USB interface **101***v*, a CPU wake controller **101***u*, a flash memory **101***w*, a symmetric key **127**, a pre-shared secret key **129***a*, a random number generator **128**, cryptographic algorithms **141**, a radio **101***z*, and other components illustrated in FIG. **1***e*. Not all of the components illustrated in FIG. **1***e* are required for many exemplary embodiments, and some of the components illustrated in FIG. **1***e* may also be optionally omitted in exemplary embodiments.

The CPU **101***b* can comprise a general purpose processor appropriate for the low power consumption requirements of a module **101**, and may also function as a microcontroller. In a preferred exemplary embodiment, the CPU **101***b* is responsible for maintaining a state machine for network and transport layer commands with an external network such as the wireless network **102** illustrated in FIG. **1***a*, where CPU **101***b* can manage the overall connection of radio **101***z* with a wireless network **102**. CPU **101***b* can include additional elements not shown, such as registers, cache memory, an arithmetic logic unit (ALU), which performs arithmetic and logical operations, and a control unit (CU), which extracts instructions from memory and decodes and executes them, calling on the ALU when necessary.

The CPU **101***b* wake and dormant or sleep states may be controlled by a CPU wake controller **101***u* to put the module **101** in a dormant state in order to conserve (i) battery life in battery **101***k*, or (ii) power consumption if land-line power is available, when sensor measurements, actuator control, or radio communications are not needed. The CPU wake controller **101***u* could optionally be integrated into CPU **101***b*. The CPU wake controller **101***u* can also include a timer to periodically wake the CPU **101***b* in order to perform sensor measurements or communicate with a wireless network **102** or server **105**. The flash memory **101***w* can be a non-volatile memory and may contain a bootloader program **125** and a module program **101***i*. Bootloader program **125** can comprise a software program or application that is initially read by CPU **101***b* upon power up of module **101** in order to configure interfaces and begin operations including loading module program **101***i*. Module program **101***i* is depicted and described in connection with FIG. **1***b* above. If module **101** operates as a payment card, then CPU wake controller **101***u* could wake CPU **101***b* when a radio **101***z* detects an RF signal from a payment terminal.

Note that CPU wake controller **101***u* can monitor sensor **101***f* in order to determine a wake condition for CPU **101***b*, wherein the CPU **101***b* remains dormant until sensor **101***f* reads a state that requires sending a message to a server **105**. An example could be sensor **101***f* comprising a shock and vibration detector or a temperature measuring device such as a thermocouple, and other examples exist as well. The CPU wake controller **101***u* can leave CPU **101***b* in a dormant state until a certain threshold of shock and vibration or temperature is recorded by the sensor **101***f*, and in this manner battery **101***k* can be conserved so that CPU **101***b* wakes when a threshold sensor measurement or an alarm condition is reported. The exemplary certain threshold of shock and vibration or temperature recorded by the sensor **101***f* can also comprise an alarm condition. When CPU **101***b* is dormant, CPU wake controller **101***u* can monitor a voltage level output by sensor **101***f*, and once a threshold voltage level is read by CPU wake controller **101***u*, CPU wake controller **101***u* can change CPU **101***b* from the dormant state to an active state in order to run a module program **101***i*.

Even without an alarm condition, CPU wake controller **101***u* can periodically wake CPU **101***b* to collect sensor data, connect to an external network such as a wireless network **102**, and send sensor data to server **105**. CPU **101***b* can include one or more cores of the processor, where each core is an independent actual central processing unit, and the cores can be the units that read and execute program instructions. The instructions can be ordinary CPU instructions such as add, move data, and branch. The dormant state of CPU **101***b* can comprise a sleep state where a power level used by a core in the processor is less than 0.010 milliwatts during a one second measurement sample, such as when the power supply is essentially removed from the core but power is supplied to memory **101***e* in order to allow a rapid waking of the CPU **101***b* or core.

Sensor **101***f* could be a device to collect environmental data or data regarding a monitored unit **119**. Sensor **101***f* could collect data such as temperature, humidity, pressure, visible light levels, radiation, shock and/or vibration, voltage, current, weight, pH levels, orientation/motion, or the presence of specific chemicals. Sensor **101***f* could also be a microphone. Sensor **101***f* could be a magnetic strip reader for credit cards and similar cards, or an antenna for either near-field RF communications, such as reading an RF identity tag. An antenna for a sensor **101***f* could also collect longer-range RF signals, such as reading long-range radio frequency identity tags. Sensor **101***f* could also collect biometric data such as heart rate, glucose levels, body temperature, or other health measurements and in this case monitored unit **119** could be a person. The sensor **101***f* can provide data to the CPU **101***b* in the form of analog or digital data, which can be communicated via a system bus **101***d* or physical interface **101***a* and other electrical interfaces are possible as well. A sensor measurement can comprise the

analog or digital data collected by CPU **101***b* from sensor **101***f*. A sensor measurement can include processing of the analog or digital data input CPU **101***b* by sensor **101***f*, such as averaging over time, using mathematic formulas to convert the raw data from sensor **101***f* into a usable form. Module **101** may also collect sensor data or sensor values using a sensor **101***f* and CPU **101***b*, where the data or values are derived from electrical signals output by a sensor **101***f*. A sensor measurement can comprise the sensor data or sensor values. If module **101** comprises a "point of presence" payment terminal, then a sensor measurement could comprise data read from a payment card.

As contemplated herein, the terms "sensor measurement" and "sensor data" can be used interchangeably, and can also be considered functionally equivalent. Although a single sensor **101***f* is shown in FIG. **1***e*, a module **101** could include multiple sensors. Each of the multiple sensors **101***f* could include a sensor identity **151**, which could comprise a number or string to identify the sensor **101***f*. Or, a sensor identity **151** could also be used with a single sensor **101***f*. In addition, although sensor **101***f* is shown as integrated into module **101**, sensor **101***f* could be external to module **101**, and connected via an external interface such as through a USB interface **101***v* or other wired or wireless configuration.

Note that sensor **101***f* could also connect to module **101** via a WiFi or similar wireless LAN connection such as Zigbee. Radio **101***z* within module **101** can operate as a WiFi base station (in addition to radio **101***z* connecting to a wireless network **102**), and sensor **101***f* could contain its own radio and WiFi chipset, such that sensor **101***f* could send sensor data to module **101** via the WiFi connection (or other wireless LAN connection). In this manner, by utilizing WiFi to connect with sensor **101***f*, module **101** could connect with a plurality of sensors **101***f* located in a vicinity of module **101**, such as within an exemplary 50 meters. In addition to the WiFi network described, sensor **101***f* and/or actuator **101***y* could connect with module **101** via any suitable wireless local area networking technology including, IEEE 802.11, IEEE 802.15.4, an ISA100.11a standards-based network, Bluetooth, and/or a 6LoWPAN.

Actuator **101***y* could be a device to control a parameter or state for a monitored unit **119**, such as changing a voltage or current, activating a switch or relay, turning on or off a microphone or speaker, activating or deactivating a light, and other examples are well known in the art. Actuator **101***y* could also be a speaker. Actuator **101***y* could be controlled by module **101** via a digital or analog output from CPU **101***b*, which could also be transmitted or sent via system bus **101***d* or a physical interface **101***a*. Although actuator **101***y* is illustrated as external to wireless module **101** in FIG. **1***e*, actuator **101***y* could also be internal to module **101**, and module **101** could include multiple actuators **101***y*.

Although a single actuator **101***y* is shown in FIG. **1***e*, a module **101** could include multiple actuators **101***y*. Each of the multiple actuators **101***y* could include an actuator identity **152**, which could comprise a number or string to identify the actuator **101***y*. Or, an actuator identity **152** could also be used with a single actuator **101***y*. If module **101** comprises a "point of presence" payment terminal, then an actuator **101***y* could be a printer for printing a receipt. If module **101** comprises a payment card for end users to make payments to merchants, then actuator **101***y* could be an LED light that turns on upon submission of a payment. Sensors and actuators are well known to those of ordinary skill in the art, and thus are not described in additional detail herein.

Module **101** can include a Universal Serial Bus (USB) interface **101***v*, which could provide a general and standards-based interface for external connection to a wide variety of sensors **101***f*, actuators **101***y*, and external computers such as laptops or mobile phones. Module **101** could also obtain power or recharge a battery **101***k* through the USB interface **101***v*. Software programs or instructions to wireless module **101** could be provided locally through USB interface **101***v*, including the initial loading of a pre-shared secret key **129***a* and/or shared secret key **510** described in FIG. **5***b* below. Module program **101***i*, operating system **101***h*, or module private key **112** could be loaded into module **101** via USB interface **101***v*, another physical interface **101***a*, or radio **101***z*. In order to support a preferred small form factor of a module **101**, the USB interface **101***v* could preferably utilize either a micro-USB or mini-USB physical interface, or future similar miniature USB interfaces related to these standard interfaces. Although a USB interface **101***v* is illustrated in FIG. **1***e*, alternative interfaces for external communication could be provided, such as a Joint Test Action Group (JTAG) connection, optical, or a proprietary interface such as a "Lightning" connection from Apple, Inc. USB interface **101***v* and similar hardware interfaces could also be optionally omitted. According to an exemplary embodiment, module **101** uses only a radio **101***z* to transmit and receive data externally to module **101**.

In accordance with an exemplary embodiment, module **101** can comprise a wireless module and include a radio **101***z*. Note that the use of a radio **101***z* is not required for module **101**, which could also obtain a connection to the Internet **107** via a wired line such as Ethernet. Although not illustrated, radio **101***z* could include antennas for reception and transmission of RF signals, and even multiple antennas could be used. Although a single radio **101***z* is illustrated in module **101**, module **101** could also contain multiple radios **101***z*, such that a first radio **101***z* connects with a WiFi network or functions as a WiFi base station or WiFi client, a second radio **101***z* connects with a PLMN mobile network such as a wireless network **102**, and a third radio **101***z* connects with a wireless network **102** operating in white-space spectrum, etc. Or, a single radio **101***z* could be utilized to connect with multiple wireless networks **102** operating in different frequencies with different RF modulation techniques and/or different RF standards.

Radio **101***z* could also comprise a software defined radio, such that radio **101***z* could be programmed to change RF protocols and modulation schemes without having to change hardware within a radio **101***z*. Thus, according to a preferred exemplary embodiment, module **101** can utilize a software defined radio for radio **101***z* in order allow module **101** to communicate with different wireless networks **102**, including new or future standards for a wireless network **102**, where the standard was not defined when module **101** was installed. In this manner, module **101** can continue to operate over an extended period such as years by upgrading the software defined radio in a radio **101***z* as standards used by a wireless network **102** changes, thereby reducing costs for changing a module **101** or a radio **101***z* within a module in a system **100**.

Radio **101***z* can support wireless LAN standards such as WiFi, Bluetooth, and Zigbee, or similar wireless LAN standards. Radio **101***z*, if present in a module **101**, could also support communication through "white space" spectrum white space spectrum recently approved for use by the Federal Communications Commission (FCC), and in this case radio **101***z* in module **101** could operate as a Mode I or Mode II device according to FCC Memorandum Opinion and Order (FC-12-36) and related white space regulation documents. Radio **101***z* illustrated in FIG. **1***e* can comprise

a radio **101***z* depicted and described in connection with FIG. **1***d* of U.S. patent application Ser. No. 14/039,401, filed Sep. 27, 2013 in the name of John Nix, the contents of which are herein incorporated in their entirety.

Note that module **101** may also operate as a base station in a wireless LAN, such as an 802.11 base station. When module **101** operates a wireless LAN, radio **101***z* can function as either a client/node or a base station **103** to support communication from other wireless nodes in physical proximity, such as other nodes within an exemplary 50 meters. The other wireless nodes could comprise a sensor **101***f* and/or actuator **101***y*, and in this case a sensor could be referred to as a "networked sensor" and an actuator could be referred to as a "networked actuator". When radio **101***z* functions as a base station **103**, module **101** can operate as a gateway, providing Internet access to these other nodes or modules **101** within the wireless LAN. Radio **101***z* can simultaneously function (i) as a base station in a wireless LAN, such as WiFi, and (ii) a client/subscriber on a wireless WAN such as a PLMN. Radio **101***z* can be selected to support multiple different wireless LAN technologies in addition to WiFi, such as the IEEE 802.15.4 standard or Bluetooth. If radio **101***z* supports IEEE 802.15.4, then wireless network **102** could be a Zigbee network, an ISA100.11a standards-based network, or a 6LoWPAN network as described by IETF RFC 4944.

In accordance with exemplary embodiments, module **101** can store module private key **112**, server public key **114**, and module identity **110**, and a symmetric key **127** in memory/RAM **101***e* during operation, such as when CPU **101***b* is active and the module **101** is connected to a network such as a wireless network **102** during data transmissions. Module private key **112** preferably is recorded in nonvolatile memory such as flash memory **101***w*, so that module **101** has access to its private key **112** after the private key has been derived or loaded, including times when a battery **101***k* has been fully drained or removed from module **101** (if module **101** does not utilize a persistent power source such as land-line power). Module private key **112** and module identity **110** could be written into ROM **101***c* upon manufacture or distribution of module **101**, although module **101** can also derive module private key **112** in accordance with exemplary embodiments and store the module private key **112** in a flash memory **101***w*.

The CPU **101***b* preferably moves module private key **112** and module identity **110** from nonvolatile memory into volatile memory, including possibly a cache memory within CPU **101***b*, before sending data through an Internet **107** illustrated in FIG. **1***a*, in order to speed computations. As a minimum, module private key **112** and module identity **110** will need to be loaded into registers of CPU **101***b* during computations or use of cryptographic algorithms **141** that require module private key **112** and/or module identity **110**, and this move of the data into registers of CPU **101***b* constitutes a move or copy of module private key **112** and module identity **110** into volatile memory.

Symmetric key **127** can be a secure, shared private key for use with symmetric encryption or symmetric ciphering algorithms **141***b* (in FIG. **1***g* below). Symmetric key **127** can be derived by using module public key **111** and/or server public key **114**, possibly through the use of a key derivation function **141***f* (also in FIG. **1***g* below). Symmetric key **127** can be used for both encryption and decryption with symmetric cryptographic algorithms **141***b* described in FIG. **1***g* below, where a shared secret key can be used to both encrypt/cipher and decrypt/decipher. Symmetric key **127** may also include an expiration time **133**, such that symmetric key **127** may only be used by module **101** during a limited period of time, such symmetric key **127** remaining only valid for a day, or a week, or during a session (where the session comprises multiple messages and/or responses between a module **101** and a server **105**), etc. Module **101** can also derive symmetric key **127** according the Elliptic Curve Integrated Encryption Scheme (ECIES) and/or ECDH **159**, discussed in FIG. **1***g* below, using module public key **111**, server public key **114**, and a random number from random number generator **128**. ECIES could be included in cryptographic algorithms **141**. A summary of ECIES shared key derivation is described the Wikipedia article "Integrated Encryption Scheme" from Sep. 18, 2013 (herein incorporated by reference). Other possibilities for shared key derivation function using public keys are possible as well, including a Diffie-Hellman key exchange. Using a derived symmetric key from the exemplary key derivation function ECIES, module **101** could derive a second symmetric key **127** after the expiration time **133** of the first symmetric key **127** had transpired.

Note that a key derivation function using public keys is not required to generate a shared symmetric key **127**, and alternatively a shared symmetric key **127** could be generated by any of module **101**, server **105**, module provider **109**, or M2M service provider **108**. If module **101** generates shared symmetric key **127** for symmetric ciphering **141***b* within a cryptographic algorithms **141**, then module **101** can send shared symmetric key **127** to server **105** using an asymmetric ciphering depicted and described in connection with FIG. **4** below. In this case, module **101** preferably uses a random number generator **128** to generate a random number **128***a* (illustrated in FIG. **1***g*) for input into cryptographic algorithms **141**, and the seed **129** in random number generator **128** could utilize data from a sensor **101***f* in order to generate a random number **128***a* with high entropy in the creation of symmetric key **127**. In exemplary embodiments, random number **128***a* can also comprise a string output of random number generator **128**, and thus random number **128***a* may be recorded in a format other than a number. Thus, the output of a random number generator **128** can comprise a string in addition to numbers, or the output of random number generator **128** could be a binary number or a series of binary numbers that could be encoded into a string. If server **105** or M2M service provider **108** generates the symmetric key **127**, server **105** can send module **101** the symmetric key **127** securely using asymmetric ciphering **141***a* depicted and described in connection with FIG. **5***a* and FIG. **1***g* below.

Module identity **110** is preferably a unique identifier of module **101**, and could comprise a number or string such as a serial number, an international mobile subscriber identity number (IMSI), international mobile equipment identity (IMEI), or an Ethernet media access control (MAC) address. According to an exemplary embodiment, module identity **110** can also comprise a serial number or string that is written into hardware of module **101** upon manufacturing or distribution of module **101**. In this case, module identity **110** could be recorded in a read only memory **101***c*, where read only memory **101***c* could not be easily erased or otherwise tampered with. Or, module **101** could read module identity **110**, which could be written into hardware by a manufacturer, distributor, or module provider **109**, by using a device driver **101***g* that reads a hardware address containing the module identity **110** using the bus **101***d*. Module **101** can read the module identity **110** by accessing a read-only address using the bus **101***d*. In either case, module identity **110** may preferably be permanently or persistently associated with the physical hardware of module **101**, which can

be helpful for the security procedures contemplated herein. Module identity **110** can function as a basic identifier for services from M2M service provider **108**, server **105**, and/or application **171***i* in order to properly identify module **101** among a plurality of modules. Module private key **112** and module public key **111** could be unique to module **101** and uniquely associated with module identity **110**, according to a preferred embodiment.

As contemplated herein, a module identity **110** can also have more than one use. A first module identity **110** could comprise a serial number for the physical hardware of module **101**, as described in the paragraph above. A second module identity **110** could also comprise a session identifier, for data sessions between module **101** and server **105**, where the session identifier can be uniquely associated by a server **105** to module **101**. In the case where module identity **110** has more than one use, format, or representation, the module identity **110** associated with or written into hardware of module **101** (and potentially read from a read-only address in module **101**) would preferably comprise the module identity **110** used in a certificate **122**. Since a module **101** may utilize multiple module public keys **111** and module private keys **112** over its lifetime, a certificate **122** for module **101** can preferably include both (i) the module identity **110** (such as a serial number for the physical hardware of module **101**) and (ii) a module public key identity **11***a* in order to specify the particular module public key **111** associated with certificate **122**. The use of a module public key identity **111***a* in a certificate **122** is also described in FIG. **1***h* below. Since a module **101** may also have multiple public keys **111** for different purposes (such as one for creating digital signatures, another for asymmetric ciphering, another for use with a second wireless network **102**, etc.), then module **101** may also potentially have multiple valid certificates **122** concurrently.

Further, as contemplated herein, a module identity **110** could also comprise more than one physical string or number, such as a first string when module **101** connects with a first M2M service provider **108** or first wireless network **102**, and module identity **110** could comprise a second string when module **101** connects with a second M2M service provider **108** or second wireless network **102**. The first M2M service provider **108** or first wireless network **102** may have a first requirement or specification for the format, length, structure, etc. of module identity **110**, and the second M2M service provider **108** or second wireless network **102** may have a second requirement or specification for the format, length, structure, etc. of module identity **110**.

Server public key **114** in module **101** could be obtained from downloading the key over the Internet **107**, or optionally also written into nonvolatile memory of module **101** upon manufacture or distribution. Server public key **114** could be obtained using a domain name or Internet address that is recorded in nonvolatile memory upon the configuration of module **101**, such as during installation or distribution, and module **101** could fetch the server public key **114** upon connecting to a wireless network **102** or other connection to the Internet **107**. Server public key **114** can be the public key associated with server **105** or M2M service provider **108**. Although a single server public key **114** is illustrated in FIG. **1***e*, module **101** could record a plurality of server public keys **114**, where each server public key **114** is associated with a different server **105**. Server public key **114** can optionally be signed by a certificate authority **118** in FIG. **1***a*, such that when module **101** communicates with server **105**, module **101** can verify a signature **123** (shown in FIG. **1***h*) within a certificate **122** associated with server **105**. Successful verification of the signature **123** can provide a high level of certainty that server **105** is properly identified and belongs to M2M service provider **108**, as opposed to being an imposter or part of a "man in the middle" attack.

Module **101** may also contain cryptographic algorithms **141**, which may comprise a suite of algorithms or subroutines that can be utilized for (i) deriving a pair of keys comprising a public key and a private key, (ii) encrypting data using public keys, (iii) decrypting data using private keys, (iv) processing secure hash signatures using private keys, and (v) verifying secure hash signatures using public keys, and related software, firmware, or subroutines for implementing a cryptographic system, including symmetric ciphering algorithms. Cryptographic algorithms **141** (also described below in FIG. **1***g*) could utilize publicly available software libraries within tools such as OpenSSL maintained by The OpenSSL Project (http://www.openssl.org/), libgecrypt maintained by The Free Software Foundation (http://www.gnu.org/software/libgecrypt/), and similar libraries such as libmcrypt and Crypto++. Note that cryptographic algorithms **141** could also use proprietary cryptographic libraries as well. In addition to implementing asymmetric encryption/ciphering, such as used with RSA and ECC cryptography, cryptographic algorithms **141** can provide symmetric ciphering where a shared private key is utilized to both encrypt and decrypt, such as with the Advanced Encryption Standard (AES) cipher suite.

As illustrated in FIG. **1***e*, module **101** may also contain a random number generator **128**. Random number generator **128** may contain a seed **129**. The creation of random numbers with a high degree of entropy may be important the use of cryptographic algorithms **141**. However, obtaining random numbers with high entropy in module **101** with limited processing resources may be a challenge using conventional technology. Since much of the operation of module **101** requires a CPU **101***b* following a pre-determined series of steps, such as the programmatic steps in an operating system **101***h*, module program **101***i*, etc., the random number generator seed **129** should preferably be populated with data that is close to random "noise" and not subject to replay. According to a preferred exemplary embodiment, module **101** utilizes data input from sensor **101***f* and/or radio **101***z* into a seed **129** within a random number generator **128**. As one example, the sensor data input into seed **129** could comprise the least significant digits of a sensor measurement or series of sensor measurements, where the least significant digits would otherwise be effectively considered "noise".

In this exemplary embodiment of using a sensor to collect a "noisy" signal for input into a random number generator **128** or seed **129**, if sensor **101***f* comprised a temperature measuring device such as a thermocouple or thermistor with a stated accuracy of 0.1 degrees, module **101** could take a series of measurements with 0.0001 degree resolution and utilize the last two digits appended from a series of measurements for input into a seed **129** in order to generate a random number **128***a*. Random number generator **128** could also utilize data input from the other components illustrated in FIG. **1***e* in order to generate a random number **128***a*, where the data input from the other components comprise a signal with a high level of "noise" or high entropy. The seed **129** could comprise multiple seeds **129** or also a random number generator **128** could derive a random number **128***a* using input from other components illustrated in FIG. **1***e* and without using a seed **129**.

Other possibilities exist as well, such as if sensor **101***f* was a camera, module **101** could take a series of pictures and

process the image to input data from the image into a seed **129**. Likewise, module **101** could utilize numerous radio-frequency (RF) measurements from radio **101***z* in order to populate seed **129**, including "noise" measurements on unused frequencies, or other data received by a radio **101***z*, including apparently random RF data. Although not illustrated in FIG. **1***e*, module **101** preferably includes a timing source such as a clock, and the clock could also be utilized to input data into a seed **129**. Data from radio **101***z*, a clock (not shown), and/or sensor **101***f*, and/or radio **101***z* could be combined in order to input data into a seed **129**. Additional input into the seed **129** could include measurements or states within memory **101***e* and **101***w*, operating system **101***h* states and files, and reading data from hardware through a bus **101***d*. A state can comprise a list or set of constants, variables, values, and/or data at a point in time or over an interval of time.

A plurality of the data as a source for a random number seed **129** could be appended together into a "module random seed file" **139** (illustrated in FIG. **1***g*) with a combined series or list of states (i.e. a plurality of sensor **101***f* measurements, radio **101***z* measurements, clock times, memory **101***e* or memory **101***w* states, operating system **101***h* states, actuator **101***y* states, and/or hardware **101***a* or **101***d* states). Note that values or data for each of the elements listed in the previous sentence could be utilized in a "module random seed file" **139** instead of or in addition to a state. The "module random seed file" **139** can then be input into the secure hash algorithm **141***c* described in FIG. **1***g* below, and the output of the secure hash algorithm **141***c* could then be used in the input as a seed **129** within random number generator **128**. Also, this combined data (including in the form of a "module random seed file" **139**) could be utilized by random number generator **128** directly in order to process a random number **128***a*. Other possibilities exist as well without departing from the scope of the present invention.

Note that the term "public key" as contemplated herein includes a key that may be shared with other elements, where the other elements may not be under the direct control of the same entity that holds the corresponding private key. However, the term "public key" as used herein does not require that the public key is made available to the general public or is publicly disclosed. An additional layer of security may be maintained in the present invention by preferably only sharing public keys on a confidential basis with other entities. For example, module public key **111** may be created by module **101** when generating module private key **112**, and module **101** may share module public key **111** with M2M service provider **108** in order to record module public key **111** in server **105**, but module **101** could choose to not share module public key **111** with other entities, such as wireless network **102** or make a certificate **122** with module public key **111** available on the Internet **107**. The benefits of confidentially sharing module public key **111** with server **105** are also further described in connection with FIG. **10** below.

Although a single public key and private key for (i) module **101** and (ii) server **105** are illustrated in FIG. **1***e* and also FIG. **1***f* below, respectively, both module **101** and server **105** may each utilize several different pairs of public keys and private keys. As one example, module **101** may record a first private key **112** used for creating a digital signature and a second private key **112** for decryption using asymmetric ciphering algorithms **141***a*. In this example, a server **105** could utilize a first module public key **111** to verify the digital signature, and a second module public key **111** could be utilized to encrypt messages sent to module **101**. Similarly, either module **101** or server **105** may use private key **112** or **105***c*, respectively, to derive secondary shared keys such as a derived shared key **129***b* below. Thus, one key pair could be used with digital signatures, a second key pair used for asymmetric ciphering, and a third key pair to derive shared secret keys. Each of the three illustrated pairs of keys could comprise a set of keys, and each of the illustrated pairs of keys could also use a different set of parameters **126**, although the parameters **126** for the various pairs of keys could also be the same.

In addition, module **101** could utilize a first set of keys to communicate with a first server **105** and a second set of keys to communicate with a second server **105**. The first set of keys could use or be associated with a first set of parameters **126** and the second set of keys could use or be associated with a second set of parameters **126**. Likewise, M2M service provider **108** illustrated in FIG. **1***a* could utilize a first pair of secondary private and public keys with a first server **105**, and a second pair of secondary private and public keys with a second server **105**. As contemplated herein, the term "private key" can also refer to secondary non-shared keys derived from a "parent" private key such as key **112** or key **105***c*, and the term "public key" can also refer to (i) secondary, shared keys derived using a private key such as key **112**, or (ii) secondary, shared keys associated with a public key such as key **111**. Other possibilities exist as well for a key to represent derived or associated keys without departing from the scope of the present invention.

According to exemplary embodiments, module **101** may also include a pre-shared secret key **129***a*. Pre-shared secret key **129***a* can comprise a secret key that is shared between module **101** and server **105** before module **101** begins (i) communicating with server **105** and/or a certificate authority **118**, (ii) or utilizing PKI-based encryption and authentication to communicate with M2M service provider **108**. As illustrated in FIG. **1***f* below, server **105** could also record the pre-shared secret key **129***a*, and a pre-shared secret key **129***a* can be associated with each module **101** using a module identity **110**. A pre-shared secret key **129***a* could be a secure key comprising a string or number loaded into a nonvolatile memory **101***w* of module **101** by a manufacturer, distributer, installer, or end user of module **101**. Pre-shared secret key **129***a* can be moved by CPU **101***b* from the nonvolatile memory **101***w* into a RAM **101***e* for further processing during the use of cryptographic algorithms **141**.

Note that pre-shared secret key **129***a* can be different than a pre-shared secret key used with conventional technology such as SIM cards in PLMN networks, such as the key Ki, where the pre-shared secret key in a SIM card is designed to not be available for movement or loading into a RAM **101***e* for processing by CPU **101***b*. Alternatively, pre-shared secret key **129***a* could be derived using a second pre-shared secret key Ki within a SIM card, but then server **105** would need to be able to derive the same pre-shared secret key **129***a*, even though server **105** may not have pre-shared secret key Ki available. Although not shown in FIG. **1***e*, a module **101** may also include a SIM card that includes a pre-shared secret key **129***a*, wherein the pre-shared secret key **129***a* in a SIM card is different than pre-shared secret key Ki, since the pre-shared secret key in the SIM card cannot be moved into RAM **101***e* for processing with a cryptographic algorithms.

Pre-shared secret key **129***a* as illustrated in FIG. **1***e* can be loaded by a manufacturer, distributor, installer, or end user of module **101** using a physical interface **101***a*, such as (i) a USB interface **101***v*, or (ii) a local WiFi network if module **101** includes a WiFi client. Pre-shared secret key **129***a* may

optionally be uniquely bound to module identity **110**, such that another module **101** with a different module identity **110** could not utilize pre-shared secret key **129***a*. Or, pre-shared secret key **129***a* could be used by any module **101**, but only used one time and thus a second module **101** could not utilize the exact same key within a pre-shared secret key **129***a* for authentication with server **105** at a subsequent time. Alternatively, pre-shared secret key **129***a* could be shared by a plurality of modules **101**, and for example compiled into a module program **101***i*, such that multiple modules utilize the same pre-shared secret key **129***a*.

Pre-shared secret key **129***a* could be obtained by a distributor, installer, or end user of module **101** by (i) using a local computer to access a web page from a web portal **171***j*, where the web page can be user password protected, (ii) entering, submitting, or typing information including a module identity **110** into the web page, and subsequently (iii) downloading pre-shared secret key **129***a* from the web portal **171***j*. A different web server could be utilized besides the web portal **171***j* illustrated in FIG. **1***d*. The web server could be operated by an entity such as module provider **109**, M2M service provider **108**, or even certificate authority **118** (since pre-shared secret key **129***a* could be used to authenticate the submission of module public key **111**). Note that the pre-shared secret key **129***a* could also be presented visually on a response web page to the submission, and the a manufacturer, distributor, installer, or end user could record the pre-shared secret key **129***a* visually presented on the response web page. Pre-shared secret key **129***a* could comprise a string of an exemplary set of characters or numbers such as 10-16 digits or characters, although other lengths for pre-shared secret key **129***a* could be possible as well.

According to a preferred exemplary embodiment, in order to obtain the pre-shared secret key **129***a* from a web page as described in the above paragraph, the distributor, installer, or end user of module **101** could read a pre-shared secret key code **134**. Pre-shared secret key code **134** could be physically printed on module **101**, such as next to a serial number printed on the enclosure of the device. Pre-shared secret key code **134** could be a unique and/or randomized string such as an exemplary 8 byte number or 10 character string (and other possibilities exist as well), where upon (a) successful submission to a web page of both the pre-shared secret key code **134** with a module identity **110**, then (b) the release of pre-shared secret key **129***a* would be authorized for the distributor, installer, or end user of module **101**. Pre-shared secret key **129***a* could be transmitted through a secure web session such as SSL or TLS from a web portal **171***j* to a computer operated by the distributor, installer, or end-user. The distributor, installer, or end-user could then load the pre-shared secret key **129***a* into the nonvolatile memory of the module using (i) a LAN connection such as WiFi to the module (and in this case radio **101***z* in module **101** could support an 802.11 type connection) or (ii) a USB interface **101***v*.

Pre-shared secret key **129***a* could be utilized by a module **101** (*i*) as a shared secret key **510** in FIG. **5***b*, or (ii) to derive a shared secret key **510** also recorded by a server **105** in FIG. **5***b* below. Note that module program **101***i* preferably includes a verification process for any pre-shared secret key **129***a* loaded by a distributor, installer, or end user, where a hash value or combination of the pre-shared secret key **129***a* and module identity **110** could be verified. As one example, the last few digits or characters in a pre-shared secret key **129***a* could comprise a checksum for a string comprising both module identity **110** and pre-shared secret key **129***a*, such that module **101** could calculate the checksum after entry of pre-shared secret key **129***a*, and module **101** can reject the pre-shared secret key **129***a* if the checksum failed. In this manner, or through the use of similar techniques, system **100** can be designed so that pre-shared secret key **129***a* can only reasonably be utilized by a correct module **101** with the correct module identity **110** for the pre-shared secret key **129***a*.

Since module **101** may have multiple module identities **110**, a first module identity **110** could be used with a pre-shared secret key code **134** and printed on an enclosure of module **101**, while a second and more secure (i.e. longer length or more randomized bits) module identity **110** could be used as a module identity **110** in a message **208** as described in FIG. **2** below. Note that when using the exemplary embodiment illustrated in FIG. **5***b* below, (x) the module identity **110** submitted with a web page and pre-shared secret key code **134** is preferably different than (y) an unencrypted module identity **110** within a message **208** illustrated in FIG. **6***a* and FIG. **6***b*. A module identity **110** submitted by a distributor, installer, or end user in a web page could preferably be easy to manually type into a web page, such as 10 or 12 decimal digits or characters, while an unencrypted module identity **110** within a message **208** could be significantly longer, such as 16 or 24 extended ASCI characters, and other possibilities exist as well without departing from the scope of the present invention.

Application server **171** running web portal **171***j* could (i) record a table of triplets including module identities **110**, pre-shared secret key codes **134**, and pre-shared secret keys **129***a*, and (ii) return via a web page the pre-shared secret key **129***a* upon a successful match and entry of the submitted pre-shared secret key code **134** and module identity **110**. Once the pre-shared secret key **129***a* has been utilized to authenticate or verify a module public key **111** with a server **105** (such as using subsequent steps **517** in FIG. **5***b* below), then that particular pre-shared secret key **129***a* may be "discarded" and not used again for security purposes contemplated herein. After module **101** obtains an initial secure connection to server **105**, using the techniques illustrated in FIG. **3** through FIG. **6***b*, then server **105** can securely send keys for use with future communication including a symmetric key **127** or other shared secret keys for authorizing any subsequent submission of a new module public key **111** with module identity **110** by module **101** in a step **517** illustrated in FIG. **5***b*.

Note that the use of a pre-shared secret key **129***a* and pre-shared secret key code **134** is also optional, such that a module program **101***i* could cipher of obfuscate the initial submission of a derived module public key **111** and module identity to a server **105**, so that server **105** could be reasonably assured only a valid module **101** submitted the module public key **111**. Alternatively, the module manufacturer could load the pre-shared secret key **129***a* in non-volatile memory such as flash **101***w* upon manufacturing, and in this case a distributor, installer, or end-user may not need to access or load the pre-shared secret key **129***a*. However, the steps for a distributor, installer, or end-user to read a pre-shared secret key code **134** and submit the code to a web portal **171***j* to obtain pre-shared secret key **129***a* may still be useful, such as if module **101** needs the equivalent of a "factory reset" after deployment, reconfiguration such as loading new firmware, or otherwise reset or returned to a default state.

Although (A) a pre-shared secret key **129***a* may be useful for sending module public key **111** to server **105** or other entities connected to the Internet **107**, such as a certificate authority **118**, (B) pre-shared secret key **129***a* could be used

for other purposes as well, such as input into a key derivation function **141***f* shown in FIG. **1***g* so that module **101** and server **105** could obtain common derived shared secret keys **129***b*. In this case, a derived shared secret key **129***b* could be utilized as a shared secret key **510** depicted and described in connection with FIG. **5***b* below. In addition, after the first use of pre-shared secret key **129***a*, a manufacturer, distributor, installer, or end user may also upload a second pre-shared key **129***a* into module **101** at a future date, such as upon reconfiguration of a module **101**.

According to a preferred exemplary embodiment, module **101** can derive its own module private key **112** and module public key **111**, and utilize pre-shared secret key **129***a* in order to securely and/or authoritatively communicate the derived module public key **111** with server **105** and/or a certificate authority **118**. The use of pre-shared secret key **129***a* can be particularly useful if module **101** has already been deployed with a monitored unit **119** and connects to server **105** though the Internet **107** for the very first time. Server **105** could preferably utilize pre-shared secret key **129***a* in order to confirm that a received module public key **111** and module identity **110** from module **101** authoritatively belong to module **101**, as opposed to being an unauthorized or even fraudulent submission of module public key **111** and module identity **110**.

Server **105** could utilize a pre-shared secret key **129***a* and the steps depicted and described in connection with FIG. **4** below in order to securely receive module public key **111** and module identity **110** from module **101**, including the first time module **101** sends module public key **111** to server **105**. As one example, pre-shared secret key **129***a* could be utilized as a symmetric ciphering **141***b* key, described in FIG. **1***g* below. After the first submission of module public key **111** to server **105**, any subsequent submissions of new module public keys **111** derived by module **101** could either (i) continue to use the pre-shared secret key **129***a*, or (ii) use a symmetric key **127** derived after the first module public key **111** has been received. Securing the submission of module public key **111** with server **105**, including both the first submission and subsequent submissions, is also depicted and described in connection with FIG. **5***b* below.

FIG. **1***f*

FIG. **1***f* is a graphical illustration of the components within a server, in accordance with exemplary embodiments. Server **105** can include a module database **105***k*, a sub-server **105***w*, and a message preprocessor **105***y*. In an exemplary embodiment, the elements illustrated within a server **105** in FIG. **1***f* may be stored in volatile memory such as RAM **105***e*, and/or storage **105***m*, and may also be accessible to a processor CPU **105***b*. In another exemplary embodiment, the module database **105***k*, sub-server **105***w*, and message processor **105***y* can comprise separate computers. Module database **105***k*, sub-server **105***w*, and message preprocessor **105***y* could represent either different processes or threads operating on a server **105**, or physically separate computers operating in conjunction over a network to perform the functions of a server **105**. Since server **105** can preferably support communications with a plurality of modules **101**, server **105** can utilize module database **105***k* to store and query data regarding a plurality of modules **101**, monitored units **119**, and the overall M2M service. The server **105** can store a plurality of module public keys **111** associated with a plurality of devices in the module database **105***k*. The server **105** can use the module identity **110** of device **101**, received in a message such as a UDP packet, to query the module database **105***k* and select the public key **111** or symmetric key **127** associated with the module **101**.

Although not illustrated in FIG. **1***f*, module database **105***k* can also record a pre-shared secret key code **134**, a set of parameters **126**, and a module identity **110** for each module **101**, along with the pre-shared secret key **129***a* shown in FIG. **1***f*. In addition, although not illustrated in FIG. **1***f*, module database **105***k* could store a symmetric key **127** for each module **101**, if cryptographic algorithms **141** utilize a symmetric cipher **141***b* such as AES for communication with module **101**. Examples of module database **105***k* could include MySQL, Oracle®, SQLite, hash tables, distributed hash tables, text files, etc. Module database **105***k* could reside within RAM **105***e* or storage **105***m*. Server **105** may also record a symmetric key **127**, where the symmetric key **127** can be associated with an expiration time **133**. Symmetric key **127** can also be recorded in a module database **105***k* or a sub-server **105***w*.

Message preprocessor **105***y* can process incoming packets and route them to an appropriate sub-server **105***w* using information contained in an incoming message, such as a module identity **110**, a server identity **206** illustrated in FIG. **2** below, and/or a destination IP address. Message preprocessor **105***y* can include rules for processing and routing, such a dropping malformed incoming messages or incoming messages without correct cryptographic data. Message preprocessor **105***y* could also optionally be combined with a server firewall **124** in order to provide firewall functionality and security at the network layer. Message preprocessor **105***y* may preferably remain "silent" to incoming packets without proper cryptographic data contained in an incoming message, such as one example of a properly formatted message **208** illustrated in FIG. **6***a* below.

Sub-server **105***w* can include a server private key **105***c* and cryptographic algorithms **141**. A plurality of sub-servers **105***w* can be utilized by a server **105** in order to support communication with a plurality of wireless modules **101**. The server private key **105***c* and module public key **111** can be utilized by server **105** to secure communication with module **101**, including the steps depicted and described in connection with FIG. **4** and FIG. **5***a* below. Cryptographic algorithms **141** may comprise a suite of algorithms or subroutines and can be utilized for (i) encrypting data using public keys, (ii) decrypting data using private keys, (iii) processing secure hash signatures using private keys, and (iv) verifying secure hash signatures using public keys.

A first sub-server **105***w* can process messages and responses with a first module **101** using a first set of security keys and algorithms, such as using RSA-based security, and a second sub-server **105***w* can process messages and responses with a second module **101** using a second set of security keys and algorithms, such as using ECC-based security. Consequently, message pre-processor **105***y* could route incoming messages to the appropriate sub-server **105***w* depending on the encryption algorithm used in the incoming message (which could be determined by message preprocessor **105***y* by querying the module database **105***k* using a module identity **110** in the incoming message **208**). Sub-servers **105***w* may utilize separate server private keys **105***c*, or the sub-servers **105***w* can share a common private key **105***c*. Sub-servers **105***w* may utilize separate cryptographic algorithms **141**, or the sub-servers **105***x* can share common cryptographic algorithms **141**. Although separate sub-servers **105***w* are illustrated in FIG. **1***f*, the sub-servers may optionally be combined with a server **105**, or omitted, with the corresponding server private key **105***c* and cryptographic algorithms **141** stored directly in a server **105**.

Server **105** may also comprise a collection of individual computers, where the individual computers could be either

centrally located or geographically dispersed, but the individual computers may function in a coordinated manner over a network to operate as a server **105**. Server **105** may be a "virtualized" server, with computing resources shared with other processes operating on a computer.

FIG. **1***g*

FIG. **1***g* is a graphical illustration of the components in a set of cryptographic algorithms, in accordance with exemplary embodiments. As contemplated herein, communications between (i) a module **101** and a server **105**, and (ii) between application **171***i* and server **105** can be secured by using cryptographic algorithms **141**. The cryptographic algorithms **141** used by module **101**, server **105**, application server **171**, and/or application **171***i* can comprise a set of steps, procedures, or software routines for accomplishing steps to cipher, decipher, sign, and verify messages, including the generation of public keys, private keys, and derived shared keys. Cryptographic algorithms **141** can be implemented in software operating on (i) module **101** in the form of a module program **101***i*, (ii) server **105** in the form of a module controller **105***x*, or (iii) application server **171** in the form of an application **171***i*. Example software for a cryptographic algorithms **141** includes the libraries within the openssl, libmcrypt, and/or and Crypto++ discussed in FIG. **1***e*. Other possibilities for the location of cryptographic algorithms within a module **101**, server **105**, or application **171***i* exist as well, including possibly module operating system **101***h*, server operating system **105***h*, and application server operating system **171***h*, respectively.

In addition, cryptographic algorithms **141** may be implemented in hardware or firmware on any of module **101**, server **105**, or application **171***i*. Note that module **101**, server **105** and application **171***i* could each utilize a different set of cryptographic algorithms **141**, although the sets of algorithms should preferably be fully interoperable (i.e. ciphering with a first symmetric ciphering algorithm **141***b* and a symmetric key **127** on module **101** could be deciphered by a second symmetric ciphering algorithm **141***b* on server **105** using the symmetric key **127**, etc.). As illustrated in FIG. **1***g*, cryptographic algorithms **141** may comprise an asymmetric ciphering algorithm **141***a*, a symmetric ciphering algorithm **141***b*, a secure hash algorithm **141***c*, a digital signature algorithm **141***d*, a key pair generation algorithm **141***e*, a key derivation function **141***f*, and a random number generator **128**.

Asymmetric ciphering algorithms **141***a* can comprise algorithms utilizing public key infrastructure (PKI) techniques for both (i) encrypting with a public key and (ii) decrypting with a private key. Example algorithms within asymmetric algorithms **141***a* include the RSA algorithms **153** and the Elliptic Curve Cryptography (ECC) algorithms **154**, and other asymmetric algorithms could be utilized as well. For example, either the ECC algorithms **154** or RSA algorithms **153** can be used for encryption and decryption, including (i) encryption element **503** discussed below, as well as (ii) decryption element **413** discussed below. A set of parameters **126** can include input into asymmetric ciphering algorithms **141***a*, such as specifying key lengths, elliptic curves to utilize (if ECC), modulus (if RSA) or other parameters or settings required. As contemplated herein and described in additional detail below, the algorithms illustrated in FIG. **1***g* can perform both ciphering and deciphering, using the appropriate keys.

The use and application of RSA algorithms and cryptography are described within IETF RFC 3447 titled "Public-Key Cryptography Standards (PKCS) #1: RSA Cryptography Specifications Version 2.1", herein incorporated by reference, among other published standards for the use of RSA algorithms **153**. The use of an RSA algorithm **153** for encryption and decryption, including with cryptographic algorithm and other description of encryption or decryption algorithms, can also be processed according to the description of the RSA algorithm according to the Wikipedia entry for "RSA (algorithm)" as of Sep. 9, 2013, which is incorporated by reference herein.

The use and application of ECC algorithms **154** for asymmetric ciphering algorithms **141***a* within cryptographic algorithms **141** are described within IETF RFC 6090 titled "Fundamental Elliptic Curve Cryptography Algorithms" (herein incorporated by reference), among other published standards using ECC. ECC algorithms **154** can also utilize elliptic curve cryptography algorithms to the Wikipedia entry for "Elliptic curve cryptography" as of Sep. 9, 2013, which is incorporated by reference herein. ECC algorithms **154** may utilized according to exemplary preferred embodiments in order to maintain high security with smaller key lengths, compared to RSA, thereby helping to comparably reduce the message lengths, radio frequency spectrum utilization, and processing power required by module **101**. Thus, the use of ECC algorithms **154** within various steps requiring ciphering or digital signatures may help conserve battery life of module **101** while maintaining the objective of securing system **100**. Note that as contemplated herein, other algorithms besides with ECC algorithms **154** and RSA algorithms **153** may be also be used in asymmetric algorithms **141***a*.

Cryptographic algorithms **141** may also include a set of symmetric ciphering algorithms **141***b*. Symmetric ciphering algorithms **141***b* can utilize a symmetric key **127** by one node such as a module **101** to encrypt or cipher data, and the encrypted data can be decrypted or deciphered by server **105** also using the symmetric key **127**. Examples of symmetric ciphers include Advanced Encryption Standard 155 (AES), as specified in Federal Information Processing Standards (FIPS) Publication 197, and Triple Data Encryption Standard (Triple DES), as described in NIST Special Publication 800-67 Revision 1, "Recommendation for the Triple Data Encryption Algorithm (TDEA) Block Cipher (Revised January 2012)". Parameters **126** input into symmetric ciphering algorithms **141***b* can include symmetric key **127** length, such as the selection of 128, 192, or 256 bits with AES **155** symmetric ciphering, and parameters **126** could also select a symmetric ciphering algorithm in a collections of symmetric ciphering algorithms **141***b*. Other examples of symmetric ciphering algorithms **141***b* may be utilized as well within cryptographic algorithms **141**. Also note that as contemplated herein, the term "symmetric ciphering" contemplates the use of a symmetric ciphering algorithm **141***b* in order to encrypt or cipher data with a symmetric ciphering algorithm **141***b*, and "asymmetric ciphering" contemplated the use of an asymmetric ciphering algorithm **141***a* to encrypt or cipher data with a public key, such as module public key **111** or server public key **114**.

Cryptographic algorithms **141** may also include a set of secure hash algorithms **141***c* in order to compute and output a secure hash value or number based on a string or file input into the secure hash algorithms **141***c*. Example secure hash algorithms include SHA256 **156** (also known as SHA-2) and SHA-3 **157**. SHA256 **156** is specified in the National Institute of Standards and Technology (NIST) Federal Information Processing Standards Publication (FIPS PUB) **180-2** titled "Secure Hash Standard". SHA-3 **157** is scheduled to be published in FIPS PUB **180-5**. Parameters **126** input into secure hash algorithms **141***c* can include the selection of the

length of the secure hash, such as using 224, 256, or 512 bits with either SHA-2 or SHA-3, and other possibilities exist as well.

Cryptographic algorithms **141** may also include a set of digital signature algorithms **141***d*, in order to sign and verify messages between (i) module **101** and server **105** or (ii) server **105** and application **171***i*. Digital signature algorithms **141***d* can also verify signatures such as comparing that (i) a first secure hash value in the form of a digital signature in a certificate (not shown) using a certificate authority public key **132** matches (ii) a second secure hash value in the certificate (not shown). Digital signature algorithms **141***d* can utilize algorithms in National Institute of Standards (NIST) "FIPS 186-4: Digital Signature Standard", or IETF RFC 6979 titled "Deterministic Usage of the Digital Signature Algorithm (DSA) and Elliptic Curve Digital Signature Algorithm (ECDSA)". The use of ECDSA algorithm **158** within a set of digital signature algorithms **141***d* may be preferred if keys such as module public key **111** and server public key **114** are based on elliptic curve cryptography. Other PKI standards or proprietary techniques for securely verifying digital signatures may be utilized as well in digital signature algorithms **141***d*. Parameters **126** input into digital signature algorithms **141***d* can include the selection of a secure hash algorithms **141***c* to utilize with digital signature algorithms **141***d*, or the algorithm to utilize, such as ECDSA shown or an RSA-based alternative for digital signatures is possible as well. Parameters input into digital signature algorithms **141***d* can also include a padding scheme for use with a digital signature algorithms **141***d*. Digital signature algorithms **141***d* could also include an RSA digital signature algorithm for use with RSA-based public and private keys.

Cryptographic algorithms **141** may also include key pair generation algorithms **141***e*, a key derivation function **141***f*, and a random number generator **128**. Key pair generation algorithms **141***e* can be utilized by module **101**, server **105**, or application **171***i* to securely generate private and public keys. The key pair generation algorithms **141***e* can also use input from a parameters **126**, such as the desired key lengths, or an ECC curve if the public key will support ECC algorithms **154**. According to an exemplary preferred embodiment, module **101** can derive a pair of module public key **111** and module private key **112** using key pair generation algorithms **141***e*. Software tools such as openssl and libcrypt include libraries for the generation key pairs, and these and similar libraries can be used in a key pair generation algorithm **141***e*.

Key derivation function **141***f* can be used by module **101**, server **105**, and/or application **171***i* in order to determine a common derived shared secret key **129**, using at least two respective public keys as input, and may also include the input of a private key. A key exchange to share a common symmetric key **127** can be performed using a key derivation function **141***f* and parameters **126**. An exemplary algorithm within a key derivation function **141***f* can be the Diffie-Hellman key exchange, which is used by tools such as secure socket layer (SSL) with RSA algorithms **153**. When using ECC algorithms **154**, module **101** and server **105** can utilize Elliptic Curve Diffie-Hellman (ECDH) algorithms **159**, and a summary of ECDH is included in the Wikipedia article titled "Elliptic Curve Diffie-Hellman" (http://en.wikipedia.org/wiki/Elliptic_curve_Diffie%E2%80%93Hellman" from Sep. 24, 2013, which is herein incorporated by reference. Other algorithms to derive a shared secret key **129***b* using public keys and a private key may also be utilized in a key derivation function **141***f*, such as the American National Standards Institute (ANSI) standard X-9.63 **160**. Parameters **126** used with key derivation function **141***f* with elliptic curve cryptography can include a common base point G for two node using the key derivation function **141***f* and public keys. The base point G in a parameters **126** can be transmitted or sent from a module **101** to a server **105** in a message **208**, and the base point G can be sent from a server **105** to a module **101** in a response **209**, and other possibilities exist as well. Parameters **126** can also include other or additional information for using a key derivation function **141***f* in order to derive a commonly shared symmetric key **127**.

Parameters **126** input into key pair generation algorithms **141***e* can include the type of asymmetric ciphering algorithms **141***a* used with the keys, the key length in bits, an elliptic curve utilized for ECC, a time-to-live for a public key that is derived, and similar settings. Additional parameters **126** for a public key can include a supported point formats extension, where the supported point formats extension could comprise uncompressed, compressed prime, or "compressed char2" formats, as specified in ANSI X-9.62. In other words, an ECC public key can have several formats and a set of parameters **126** can be useful to specify the format. Although a set of parameters **126** is illustrated in FIG. **1***g* as internal to cryptographic algorithms **141**, parameters **126** could be recorded in other locations in a module **101** or a system **100**. As one example, parameters **126** could be recorded in a server **105** and downloaded by module **101** using the Internet **107**. The various algorithms within cryptographic algorithms **141** may utilize a random number generator **128**, which is also depicted and described in connection with FIG. **1***e* above.

According to a preferred exemplary embodiment, parameters **126** can include values to define an elliptic curve and/or use ECC algorithms **154**. The values could be constants or variables in a defining equation for an elliptic curve, or the parameters could simply name an existing, defined curve such as the standard named curve illustrated in parameters **126** in FIG. **1***h*. Parameters **126** could include a set of ECC parameters **137** for using elliptic curve cryptography in ECC algorithms **154**, where the ECC parameters **137** can include the ECC parameters in section 3.3 of IETF RFC 6090, including: (i) a prime number p that indicates the order of a field Fp, (ii) a value "a" used in a curve equation, (iii) a value "b" used in the curve equation, (iii) a generator "g" of the subgroup, and (iv) an order "n" of the subgroup generated by "g". Further, the ECC parameters **137** could include values used for elliptic curve cryptography as specified in IETF RFC 5639 titled "Elliptic Curve Cryptography (ECC) Brainpool Standard Curves and Curve Generation", section 3: (i) a "p" value for the prime specifying the base field, (ii) "A" and "B" are coefficients for an equation such as y^2=x^3+A*x+B mod p defining the elliptic curve, (iii) "G"=(x,y) as the base point, i.e., a point in E of prime order, (iv) "q" as the prime order of the group generated by G, and (v) "h" as the cofactor of G in E, i.e., #E(GF(p))/q. Other possibilities exist as well for an ECC parameters **137** that can be used in a cryptographic algorithms. Parameters **126** could also include an ECC standard curve **138**, which could comprise a name and/or values for a standardized curve, such as the list of named curves included in section 5.1.1 of IETF RFC 4492 titled "Elliptic Curve Cryptography (ECC) Cipher Suites for Transport Layer Security (TLS)."

As contemplated herein, a set of cryptographic algorithms **141** may operate using either strings or numbers, and parameters **126** could include either strings or numbers as well. The processing of cryptographic algorithms within a module **101** can take place within a CPU **101***b*, or module

101 could also process cryptographic algorithms in a cryptographic processing unit (not shown) connected to the system bus 101*d*. According to an exemplary embodiment, a module 101 or a server 105 could include a cryptographic processing unit (not shown) separate from the CPU 101*b* in order to speed cryptographic computations and/or reduce energy required for supporting the use of cryptography through a system 100. Alternatively, cryptographic algorithms can be implemented entirely in software within a module 101 and/or server 105.

FIG. 1*h*

FIG. 1*h* is an illustration of a certificate that includes a PKI public key, where the key comprises an elliptic curve cryptography key, in accordance with exemplary embodiments. Public and private keys in system 100 can utilize PKI techniques other than RSA, such as the elliptic curve cryptography (ECC) public key 111 illustrated in FIG. 1*h*. One benefit of using ECC is that an equivalent level of security can be obtained for a much smaller key length. Also, energy may be conserved using ECC algorithms 154 compared to RSA algorithms 153. An analysis of the energy conserved for ciphering, deciphering, signing, and verifying messages using ECC versus RSA is included in the paper titled "Energy Analysis of Public-Key Cryptography on Small Wireless Devices" by Wander et al (herein incorporated by reference). Smaller key lengths save bandwidth, memory, processing resources, and power, which are all valuable for a module 101 to conserve a battery 101*k* and usage of radio-frequency spectrum. For example, an ECC key length of 283 bits provides security similar to an RSA key length of approximately 2048 bits. Module public key 111 can comprise an ECC key in an X.509 certificate, as illustrated in FIG. 1*h*. Another benefit of using ECC algorithms 154 is that many different defining equations for elliptic curves could be utilized, and the defining equations could also be kept confidential, such that a defining equation for an elliptic curve used in ECC algorithms may optionally be omitted from a certificate 122. In this case, if a public key such as module public key 111 is recorded in a certificate 122, a name or identifying value for the elliptic curve used with a public key could be recorded in a certificate 122, but the underlying defining curve for an elliptic curve could remain confidential. The values to determine an elliptic curve defining equation could be stored in a parameters 126, and the defining equation could also optionally be disclosed.

Certificate 122 could include a signature 123, where signature 123 can be signed using ECC signature techniques, such as the Elliptic Curve Digital Signature Algorithm (ECDSA) 158 with a secure hash such as SHA256 156. In order to generate signature 123, the private key associated with either CA 118 or module provider 109 may also be an ECC-based private key. Note that the public key 111 in a certificate 122 could use a different asymmetric ciphering algorithm 141*a* than the algorithm used for signing, such that the public key 111 can be an ECC key, while the signature 123 could be generated with RSA algorithm 153 and/or key. Certificate 122 may also include parameters 126, where parameters 126 can specify an elliptic curve utilized with the module public key 111. Parameters 126 could also include the start and end times for the validity of either public key 111 or certificate 122. Other parameters 126 can be utilized in a certificate 122 as well, and a parameters 126 may specify values that are not included or external to a certificate 122.

Certificate 122 illustrated in FIG. 1*h* also illustrates an exemplary embodiment of the present invention. Over the lifetime of a module 101, which could be a decade or longer, multiple module public keys 111 may be utilized. The potential use of multiple different module public keys 111 include (i) the expiration of a certificate 122 (including expiration of a public key associated with a certificate authority used in signature 123), (ii) a need to change an elliptic curve specified in a parameters 126, (iii) adding a new public/private key pair for connection with a different wireless network 102, (iv) as increasing a key length utilized in a public/private key pair, (v) the transfer of ownership or control of module 101, and/or (vi) module 101 connecting to a new server that utilizes a different asymmetric ciphering algorithm (i.e. RSA instead of ECC). Other possibilities exist as well for reasons a module to derive a new module public key 111. Note that the multiple module public keys 111 may also be utilized concurrently, such that (i) a first module public key 111 in a first certificate 122 can be utilized with a first server 105, and (ii) a second module public key 111 (possibly derived using a different set of parameters 126 including using a different elliptic curve) can be utilized with a second server 105 and/or wireless network 102.

In either case of (i) module 101 using multiple module public keys 111 concurrently, or (ii) module 101 using different module public keys 111 in sequence, a certificate 122 can preferably include a module public key identity 111*a* to specify the module public key 111 utilized in a certificate 122. As illustrated in FIG. 1*a*, the module public key identity 111*a* could be included in the "Common Name" (CN) field, and the module identity 110 can be included in the "Organizational Unit" (OU) field. Alternatively, the module public key identity 111*a* and module identity 110 can be appended together and used in the CN field. In this manner and according to preferred exemplary embodiments, a module public key identity 111*a* is utilized with both a module identity 110 and a module public key 111 within a certificate 122. Also, as noted previously herein, the use of a certificate 122 may optionally be omitted, such that module 101 and server 105 share public keys without using certificates 122. The module identity 110, or a value associated with the module identity 110 can also be included in certificate 122, such as the "Common Name" (CN) field of a X.509 certificate 122, as illustrated in FIG. 1*h*.

Note that the use of a certificate 122 is not required for the format of a public or shared key, and the public keys could optionally omit a signature from a certificate authority 118. In this case, the public keys such as module public key 111 and/or server public key 114 could be recorded in the format of a string, without the additional fields illustrated in FIG. 1*h*. Server public key 114 may also be recorded in a certificate 122 with a signature 123 from a certificate authority 118. Other possibilities exist as well without departing from the scope of the present invention.

FIG. 1*i*

FIG. 1*i* is a graphical illustration of an exemplary system that includes a user, an application, a set of servers, and a set of modules, in accordance with exemplary embodiments. System 199 illustrated in FIG. 1*i* can include a user 183, an application 171*i*, a set of servers 105, and a set of modules 101, which can communicate as illustrated using the Internet 107. Each of a server 105 A and server 105 B and additional servers can communicate with a plurality of modules. An application 171*i* can communicate with a plurality of servers 105. Although the servers 105 an application 171*i* in system 100 in FIG. 1*i* are illustrated as being separate, application 171*i* and server 105 may optionally be combined into a single node, such that the application 171*i* and server 105 operate as separate processes or programs on the same

computer, or on a computer operating in a distributed environment such as a cloud configuration. In addition, even though a single application **171***i* and a single user **183** are illustrated in FIG. **1***i*, a system **199** could include multiple applications **171***i* and multiple users **183**.

User **183** can comprise an individual, business manager, network engineer, systems administrator, other employee with functional responsibilities for a system **199** (or components within a system **199** or system **100**) accessing application **171***i* using a computer with a user interface such as a web browser **183***a*. Application **171***i* could also send an email or text message to user **183** if an alarm condition is detected in system **199**, such as if a sensor **101***f* measurement exceeds a prescribed threshold value. The web browser **183***a* could use a connection **184** to access a web portal **171***j* operating on application **171***i*. Connection **184** could include hypertext markup language (HTML) messages, and could be through a secure connection such as TLS or IPsec, although other possibilities exist as well to those of ordinary skill in the art. Any module **101**, such as Module **101** A, could use the Internet **107** and establish a primary connection **181** with server **105** A, and also module **101** A could establish a backup connection **182** with server **105** B if the primary connection **181** is not available. Alternatively, any module **101**, such as module **101** A, could communicate with more than one server **105** concurrently or in sequence, such that module **101** A communicates with both server **105** A and server **105** B. According to exemplary embodiments, during an active state between periods of sleep or being dormant, module **101** may communicate with more than one server **105**, such as a first server **105** A and a second server **105** B. Other possibilities for a plurality of modules **101** to communicate with a plurality of servers **105** exist without departing from the scope of the present invention.

FIG. **2**

FIG. **2** is a graphical illustration of an exemplary system, where a module sends a message to a server, and where the server responds to the message, in accordance with exemplary embodiments. Module **101** as depicted and described in FIG. **2** can operate as a wireless module **101**, although a wired connection to the Internet **107** could alternatively be utilized. System **100** as illustrated in FIG. **2** includes RF signals **201**, module IP address **202**, port number **203**, module IP:port **204**, server port number **205**, server ID **206**, server IP:port number **207**, message **208**, response **209**, wireless network firewall address **210**, and firewall port binding packet **211**. Many of the elements illustrated within system **100** in FIG. **2** are also depicted and described in connection with FIG. 2 of U.S. patent application Ser. No. 14/039,401 (the contents of which are hereby incorporated by reference in their entirety). As contemplated herein, a wireless module **101** can comprise a module **101**, or in other words a wireless module **101** may be a module **101** that is wireless. Functions described as being performed by a wireless module **101** may also be performed by a wired module **101** (where connection to a wired network would be used instead of connection to a wireless network **102**). Also as contemplated herein and illustrated in FIG. **2**, the wording "module **101** sends a message **208**" can also be considered equivalent to "server **105** receives a message **208**". Likewise, the wording "server **105** sends a response **209**" can be considered equivalent to "module **101** receives a response **209**".

A wireless module **101** can wake from a dormant state in order perform (i) remote and automated monitoring and (ii) control functions such as collecting a sensor **101***f* measurement, communicating with server **105**, and controlling an actuator **101***y*. If module **101** is connected to land-line power or a long-lasting external power source such solar power, then module **101** may remain in an active state and bypass a dormant state, although transmitting RF signals **201** may preferably only be utilized when communicating with wireless network **102** or sending data to and receiving data from server **105**. Upon waking from the dormant state and starting communication with a server **105**, a wireless module **101** can begin transmitting RF signals **201** to base station **103**. The wireless module can acquire an IP address **202** from the wireless network **102**. IP address **202** is illustrated as being an IPv6 address, but IP address **202** could also be an IPv4 address. IP address **202** could also be a subset of IPv6 addresses such as the last 32 or 64 bits in a full 128 bit IPv6 address, and wireless network **102** could append the beginning 96 or 64 bits, respectively, of the IPv6 address when wireless module **101** sends packets to the Internet **107**.

In order to transmit or send data from wireless module **101** to server **105**, a wireless module **101** can use module program **101***i* to collect data from a sensor **101***f* in order to update server **105**. Module program **101***i* can request a port number **203** from operating system **101***h* in order to have a source IP:port for sending data using IP protocols such as TCP and UDP. The terminology "IP:port" as described herein refers to combining an IP address with a port number. Wireless module IP address **202** and port number **203** can be combined to form IP:port number **204**. IP:port number **204** can be utilized as a source IP:port number for packets transmitted from wireless module **101**, as well as a destination IP:port number for packets received by wireless module **101**, when communicating with server **105**.

In order to utilize Internet **107**, module **101** may also need a destination IP address and port number in order to send packets to server **105**. Before sending data to server **105**, wireless module **101** preferably retrieves server IP address **106** and server port number **205** from RAM **101***e*. Server IP address **106** could be recorded in RAM **101***e* via (i) a DNS query using server name **206** or (ii) queries to M2M service provider **108** or wireless network **102**. CPU **101***b* may copy server IP address **106** and server port number **205** from nonvolatile memory into volatile memory such as a register for processing to send a packet to server **105**. Server name **206** could also be a server identity. (A) Server IP address **106** or server name **206** and (B) server port number **205** could be recorded in a nonvolatile memory such as flash memory **101***w* so that wireless module **101** can store the proper destination of packets transmitted or sent even when wireless module is dormant or shutdown, which avoids the processing and bandwidth requirements of obtaining server IP address **106** and server port number **205** every time the wireless module **101** wakes from the dormant or shutdown state. Server IP address **106** and server port number **205** can be combined into a server IP:port number **207**.

After collecting data from a sensor, module **101** can send a packet from IP:port **204** to IP:port **207**, and the packet could comprise a message **208** that may include the data from a sensor **101***f*. Note that message **208** does not need to include sensor data, and message could potentially be a periodic registration message or keep-alive message. As contemplated herein, the term "sensor measurement" can refer to data associated with or derived from a sensor **101***f* A sensor measurement, can comprise a string containing data regarding a parameter of a monitored unit **119** and collected by a sensor **101***f*. The sensor measurement as sent in a message **208** can also represent a string (alphanumeric, binary, text, hexadecimal, etc.), where the string comprises a transformation or processing of sensor data collected by a

CPU **101***b*, such including formatting, compressing, or encrypting, encoding, etc. of sensor data.

In order to minimize bandwidth and time required for RF signals **201** to be active, module **101** can send the message **208** as a single UDP datagram in accordance with a preferred exemplary embodiment. The single UDP datagram in this embodiment can preferably be the only packet sent from module **101** to server **105** or M2M service provider **108** during a wake state for the module **101** when the radio **101***z* is active and transmitting, such as in a radio resource control (RRC) connected state. In other words, according to this preferred exemplary embodiment, the message **208** sent by module **101** can preferably be the only message or packet sent by the wireless module to the server **105** between dormant periods of module **101**. By sending message **208** as a single UDP datagram, both a battery **101***k* is conserved and utilization of valuable RF spectrum is reduced. Message **208** could also comprise a series of associated UDP messages.

Also, as contemplated herein, message **208** could comprise a related series of packets, so that message **208** could comprise multiple datagrams. As one example, if TCP is utilized as the transport protocol for message **208**, then the series of TCP messages including the initial handshake, one or more packets of payload data, and the closing of the connection could together comprise message **208**. As another example, if UDP or UDP Lite is utilized for the transport protocol, and payload data exceeds a maximum transmission unit (MTU) size for the UDP packet and the payload data is spread across multiple packets, then the multiple packets would comprise a message **208**. Further, a related series of packets comprising a message **208** could be identified by using the same source port number for module **101**. In addition, a related series of packets comprising a first message **208** could be identified as a series of packets sent by module **101** before receiving a response **209** from a server, and packets sent after receiving a response **209** could comprise a second message **208**. Other possibilities for a message **208** to comprise multiple packets or datagrams may exist without departing from the scope of the present invention.

The UDP datagram for message **208** could also be formatted according to the UDP Lite protocol, as specified in IETF RFC 3828, which is also incorporated by reference herein. The term "UDP Lite" described in the present invention may also refer to any connectionless protocol widely supported on Internet **107** where checksums may be partially disabled, thereby supporting the transfer of bit errors within a datagram. The advantages of UDP over TCP is that UDP can be quickly sent, while TCP requires a "handshake" with the server which requires more time and bandwidth, which would utilize more energy from battery **101***k*. Weak or "noisy" RF signals between wireless module **101** and wireless network **102** may degrade or slow TCP transmissions, resulting in unwanted and unnecessary retransmission of individual TCP messages in the standard TCP "handshake" and connection close procedures. Also, the sensor data from a sensor **101***f* may be relatively small, such as a dozens of bytes in an exemplary embodiment, and UDP can provide significantly less signaling overhead than TCP, especially with small messages for the duration of the session. However, some M2M applications may prefer or require TCP and in this case message **208** can be formatted according to TCP. Thus, according to an exemplary embodiment, both message **208** and response **209** can be TCP messages. In this exemplary embodiment, message **208** and response **209** could each comprise a series of TCP messages that can include a TCP SYN, SYN ACK, ACK, ACK w/data, FIN ACK, etc.

According to an exemplary embodiment, module **101** sends the same sensor data in multiple copies of the same UDP packet. Each of the multiple copies of the same UDP packet can also optionally be formatted according to the UDP Lite protocol. As one example, wireless module sends three identical copies of the UDP or UDP Lite packet that include the same sensor data. The benefit of sending three copies of UDP Lite include (i) the RF signals **201** received by the base station **103** could include bit errors, which could result in a regular (RFC 768) UDP packet being dropped, since a bit error could result in a UDP checksum mismatch, as received and processed by wireless network **102**. Note that the use of checksums is mandatory in IPv6, and thus checksums cannot be fully disabled in IPv6. With UDP Lite packets transmitted by wireless module **101**, where the mandatory checksum for IPv6 can cover the packet header, wireless network **102** can forward all packets received, potentially including bit errors, to server **105** over the Internet **107**.

Server **105** can receive the multiple copies of the UDP or UDP Lite packets, which could include bit errors received, and server **105** could compare or combine the multiple copies or each individual UDP Lite packet in order to remove bit errors. Note that UDP Lite is not required, and wireless module **101** could send the message **208** using a single UDP packet, or multiple copies of a regular UDP (i.e. non UDP Lite) packet. However, using UDP Lite with multiple packets sent can provide benefits such as if the sensor data is encrypted in the packet, then a single bit error would normally break the receiver's ability to decipher the data using a cryptographic key, unless the encrypted data was channel coded and the channel coding could recover from the bit error in order to present an error-free input of the encrypted data to a deciphering algorithm.

Further, between periods of sleep when a wireless module **101** becomes active and transmits RF signals **201**, module **101**, which may also comprise a wireless module **101**, could send the sensor data in a single UDP Lite packet where the packet includes channel coding, which can also be referred to forward error correction. Forward error correction could also be implemented by sending multiple copies of the same UDP packet. Note that since large segments of message **208** could include encrypted or hashed data, those segments may not be appropriate for compression since the data is often similar to random strings which are not readily compressed. Channel coding techniques for the data in message **208** could include block codes and convolution codes. Block codes could include Reed-Solomon, Golay, BCH, Hamming, and turbo codes. According to a preferred exemplary embodiment, data within message **208** is sent as a UDP Lite packet using a turbo code to correct multiple bit errors within a packet or datagram sent by module **101** and received by server **105**.

In system **100** illustrated in FIG. **2**, server **105** can use IP:port **207** to receive the packet from wireless module **101** and sent from source IP:port **204** to IP:port **207**, and the packet could comprise a message **208** that may include the data from a sensor associated with module **101** or monitored unit **119**. As contemplated herein, a message **208** illustrated in FIG. **2** does not need to include sensor data and other data could be transmitted or sent, such as a server instruction **414** (described in FIG. **4** below), or other data pertaining to module **101** or a monitored unit **119**. Note that server **105** can use IP:port **207** to receive a plurality of messages **208**

from a plurality of wireless modules **101**. Server **105** preferably listens for UDP packets on IP:port **207** or monitors IP:port **207**, although TCP packets could be supported as well. If server **105** receives multiple copies of the same UDP packet from module **101**, server **105** preferably includes a timer. The timer can start when the first packet in the series of packets comprising a message **208** is received, and packets received outside the expiration of the timer would be discarded. In this manner, server **105** would be protected from replay attacks, even though module **101** may send multiple copies of the same packet in order to implement forward error correction. The timer used by a server **105** to drop duplicate packets received outside the timer window could be a relatively short value such as less than 5 seconds.

After receiving the message **208** and processing the message according to the techniques described below such as in FIG. **4**, server **105** can send a response **209**. Since module **101** may belong to a wireless network **102** which includes a firewall **104**, the source IP:port of the message **208** received by server **105** could be different from the source IP:port **204** utilized by wireless module **101**. The source IP:port in message **208** could be changed if firewall **104** performs network address translation (NAT), as one example. Server **105** may not readily know if a NAT translation has been performed on the message **208**. Alternatively, firewall **104** may not perform NAT, but could still block data from the Internet **107** which does not properly match the firewall rules. As one example, firewall **104** could be a symmetric firewall (but without NAT functionality), where only packets from IP:port **207** to IP:port **204** are allowed to pass the firewall after message **208** has been sent by module **101**.

In either case, where firewall **104** may or may not perform NAT routing, server **105** preferably sends the response **209** from the server IP:port **207** to the source IP:port it receives in message **208**. According to a preferred exemplary embodiment, response **209** is a UDP packet sent from server **105** with (i) a source IP:port **207** and (ii) a destination IP:port equal to the source IP:port received in message **208**, as illustrated in packet **209***a*. The example use of source and destination IP:ports in message **208** and response **209** are also illustrated in FIG. **6***a* below. In this manner, the UDP packet can traverse a firewall **104**, if firewall **104** is present. If firewall **104** is present and performs NAT routing, then firewall **104** can receive the response **209** and change the destination IP address and port within response **209** to equal IP:port **204**.

According to exemplary preferred embodiments, module **101** may also obtain power from a land-line source, such as a traditional 120 volt wall socket, or possibly power over Ethernet, and other non-transient power sources could be utilized as well. In this case, module **101** may remain persistently connected to the Internet through either a wireless network **102** or a wired connection such as Ethernet. In other words, module **101** may omit entering periods of sleep or dormancy where inbound packets from the Internet would not be received due to the sleep state of module **101**. Consequently in an exemplary embodiment, module **101** which does not sleep for periods longer than a minute may preferably periodically send a firewall port binding packet **211** from IP:port **204** to IP:port **207** in order to keep ports and addresses within a firewall **104** and/or firewall **124** open to communications between module **101** and server **105**. Firewall port binding packet **211** can comprise a packet that is sent periodically using a timer interval that is shorter than the port-binding timeout period **117** on a firewall **104** and firewall **124**.

Continuing with this exemplary embodiment where module **101** does not sleep for periods longer than approximately one minute, if UDP is utilized for message **208** and response **209**, then a small UDP packet comprising firewall port binding packet **211** can be sent periodically such as every 45 seconds. If TCP is utilized for message **208** and response **209**, then a small TCP packet comprising firewall port binding packet **211** can be sent periodically such as every 4 minutes. Other possibilities for the timing of sending firewall port binding packet **211** are possible as well. By sending firewall port binding packet **211** periodically, server **105** (*i*) can send module **101** a response **209**, which could include a module instruction **502** as explained in FIG. **5***a*, at (ii) time intervals between message **208** and response **209** that are longer than the firewall port binding timeout values **117** of firewall **104** and/or firewall **124**. Without firewall port binding packet **211**, if (A) a response **209** sent from server **105** at an exemplary 180 seconds after receiving message **208**, such as after a firewall port binding timeout value **117** of firewall **104** of an exemplary 60 seconds, then (B) response **209** would be dropped by firewall **104** and the response **209** would not be received by module **101**.

FIG. **3**

FIG. **3** is a flow chart illustrating exemplary steps for a server to receive a message from a module, in accordance with exemplary embodiments. As illustrated in FIG. **3**, FIG. **3** can include steps used by a module controller **105***x* in a server **105** as illustrated in FIG. **1***c*. The processes and operations, including steps for module controller **105***x*, described below with respect to all of the logic flow diagrams may include the manipulation of signals by a processor and the maintenance of these signals within data structures resident in one or more memory storage devices. For the purposes of this discussion, a process can be generally conceived to be a sequence of computer-executed steps leading to a desired result.

These steps usually require physical manipulations of physical quantities. Usually, though not necessarily, these quantities take the form of electrical, magnetic, or optical signals capable of being stored, transferred, combined, compared, or otherwise manipulated. It is convention for those skilled in the art to refer to representations of these signals as bits, bytes, words, information, elements, symbols, characters, numbers, points, data, entries, objects, images, files, or the like. It should be kept in mind, however, that these and similar terms are associated with appropriate physical quantities for computer operations, and that these terms are merely conventional labels applied to physical quantities that exist within and during operation of the computer.

It should also be understood that manipulations within the computer are often referred to in terms such as listing, creating, adding, calculating, comparing, moving, receiving, determining, configuring, identifying, populating, loading, performing, executing, storing etc. that are often associated with manual operations performed by a human operator. The operations described herein can be machine operations performed in conjunction with various input provided by a human operator or user that interacts with the computer.

In addition, it should be understood that the programs, processes, methods, etc. described herein are not related or limited to any particular computer or apparatus. Rather, various types of general purpose machines may be used with the following process in accordance with the teachings described herein.

The present invention may comprise a computer program or hardware or a combination thereof which embodies the functions described herein and illustrated in the appended

flow charts. However, it should be apparent that there could be many different ways of implementing the invention in computer programming or hardware design, and the invention should not be construed as limited to any one set of computer program instructions.

Further, a skilled programmer would be able to write such a computer program or identify the appropriate hardware circuits to implement the disclosed invention without difficulty based on the flow charts and associated description in the application text, for example. Therefore, disclosure of a particular set of program code instructions or detailed hardware devices is not considered necessary for an adequate understanding of how to make and use the invention. The inventive functionality of the claimed computer implemented processes will be explained in more detail in the following description in conjunction with the remaining Figures illustrating other process flows.

Further, certain steps in the processes or process flow described in all of the logic flow diagrams below must naturally precede others for the present invention to function as described. However, the present invention is not limited to the order of the steps described if such order or sequence does not alter the functionality of the present invention. That is, it is recognized that some steps may be performed before, after, or in parallel other steps without departing from the scope and spirit of the present invention.

The processes, operations, and steps performed by the hardware and software described in this document usually include the manipulation of signals by a CPU or remote server and the maintenance of these signals within data structures resident in one or more of the local or remote memory storage devices. Such data structures impose a physical organization upon the collection of data stored within a memory storage device and represent specific electrical or magnetic elements. These symbolic representations are the means used by those skilled in the art of computer programming and computer construction to most effectively convey teachings and discoveries to others skilled in the art.

At step **311**, the server **105** can record a module public key **111**, or a plurality of module keys **111** in a module database **105***k*. The module public key **111** could be received in a message **208** according to steps **516** and **517**, including authenticating the message **208**, as depicted and described in connection with FIG. **5***b* below. Module public key **111** could also be recorded at step **311** before module **101** connects to the Internet **107** the very first time, and in this case module public key **111** could be recorded in server **105** by M2M service provider **108** or module provider **109**. At step **312**, the server **105** can open a TCP/UDP socket associated with an IP:port number **207** and listen or monitor for incoming message from modules. At step **313**, server **105** can receive a message **208** sent by module **101**, using the IP:port number **207**. Although not illustrated in FIG. **3**, upon the first communication from module **101** by server **105** where the communication could include step **313**, according to an exemplary embodiment, module **101** can also send a certificate **122** to server **105**, where certificate **122** would normally include module public key **111** and module identity **110**. Server **105** could utilize a certificate **122** to verify a module identity **110**, as described in FIG. **4** below at step **412**.

An exemplary format of message **208** is depicted and described in connection with FIG. **6***a* below, and other possibilities for a message **208** exist as well. Although not illustrated in FIG. **3**, after receiving message **208**, server **105** may also process any channel coding present in message **208** in order to eliminate any bit errors received. The channel coding could be included in a message **208** that utilizes the UDP Lite protocol. At step **314**, server **105** can decrypt a message **208** using a cryptographic algorithm **141** and one of (i) server private key **105***c*, or (ii) a symmetric key **127**. Additional details regarding step **314** are depicted and described in connection with FIG. **4** below. At step **315**, server **105** can verify that message **208** was sent by module **101** using a module identity **110**, module public key **111**, and a cryptographic algorithm **141**. Additional details regarding step **315** are depicted and described in connection with FIG. **4** below. Note that step **315** can take place before step **314** if the module identity **110** and/or a digital signature is not encrypted within message **208** (i.e. a sensor measurement in message **208** could be encrypted but a module identity **110** or digital signature may not be encrypted). Step **315** may optionally be omitted, if a symmetric key **127** is used to cipher data within message **208**, such that a module digital signature from module **101** was previously verified when the symmetric key **127** was implemented.

After verifying the identity of module **101** in step **315**, at step **316** server **105** can record sensor data or sensor measurements within message **208** in a module database **105***k*, if message **208** has a sensor measurement. Note that message **208** may not have a sensor measurement, and in this case step **316** can be skipped, or message **208** may also include other data besides a sensor measurement. Sensor data recorded in module database **105***k* can be made available for subsequent processing by server **105** or other servers or applications associated with an M2M service provider **108** in order to manage the function and operation of module **101** or monitored unit **119**. As illustrated in FIG. **7** through FIG. **9**, received sensor data could also be forwarded by server **105** to an application server **171**. Although not illustrated in FIG. **3**, in an exemplary embodiment at step **316** server **105** could alternatively forward the sensor data to application **171***i* instead of recording the data in module database **105***k*.

After receiving message **208**, server **105** can process a response **209** at step **317***a*. Step **317***a* can comprise encrypting an instruction, where the instruction could include an acknowledgement of the message received, a command or setting for an actuator, and/or another control message for module **101**. Server **105** can utilize a module public key **111** and cryptographic algorithms **141** in order to encrypt the instruction. Step **317***b* can comprise creating a digital signature for the response **209** using the server private key **105***c* and cryptographic algorithms **141**.

Additional details regarding steps **317***a* and **317***b* are depicted and described in connection with FIG. **5***a* below. Note that step **317***a* and/or step **317***b* may optionally be omitted, such that response **209** is transmitted without encryption and/or a signature, and security could be obtained through other means, such as through firewalls **104** and **124**, or using a secured network link between module **101** and server **105**, such as setting up a virtual private network (VPN) or SSH tunnel between the two endpoints. These alternative means for security at the network layer would likely require additional bandwidth and power consumption for a module **101** and thus may not be adequately efficient. As one example, if module **101** is a wireless module that sleeps for relatively long periods such as every hour (and obtains a new IP address for every wake period), setting up a new VPN between module **101** and server **105** in order to receive send a message from module **101** may not be practical due to the extra drain on a battery **101***k* for re-establishing the VPN. Or, only portions of steps **317***a* and

317*b* could be used, such that a response **209** (or a message **208** received in step **313**) is not encrypted but a digital signature is used in the response **209** (or message **208**).

After completing steps **317***a* and **317***b*, at step **209***a*, server **105** can send response **209** from (a) the source port utilized to receive message **208** to (b) a destination IP:port. The destination IP:port can comprise the source IP:port in message **208** as received by server **105**, and the destination IP:port can represent the external interface of a firewall **104**. In other words, server **105** may send response **209** from server IP:port **207** to the source IP:port received in message **208**, which could represent the source IP:port on a wireless network firewall **104**, wherein the source IP:port on the wireless network firewall **104** contains the firewall IP address **210**. The wireless network firewall **104** could forward the response **209** to module IP:port **204**. As contemplated herein, server **105** can send response **209** as soon as practical after receiving message **208**, and in any case response **209** should be sent before the expiration of a firewall port binding timeout value **117** associated with firewall **104**. According to a preferred exemplary embodiment, response **209** is sent by server **105** within 1 second of receiving message **208**. After completing step **209***a* as illustrated in FIG. **3***b*, server **105** can return to step **312** and listen for or monitor for additional incoming messages **208** from modules **101**.

FIG. **4**

FIG. **4** is a flow chart illustrating exemplary steps for a server to process a message, including verifying a module's identity and decrypting data, in accordance with exemplary embodiments. The steps illustrated in FIG. **4** may comprise step **315** and step **316** illustrated in FIG. **3** above. Server **105** can receive message **208** using IP:port **207**, as illustrated in FIG. **2**. Message **208** can be formatted according to the UDP protocol or UDP Lite protocol, although other possibilities exist as well without departing from the scope of the present invention

At step **407**, server **105** can process the packet using the appropriate transport layer protocol, such as UDP. In this step **407**, the body of the packet comprising message **208** can be extracted, and a checksum, if any, can be calculated to verify the integrity. Note that if the UDP Lite protocol is utilized, the checksum may optionally only apply to the packet header. At step **408**, server **105** can remove channel coding, if present in message **208**. Channel coding techniques utilized in step **408** could include block codes and convolution codes, and can use the same channel coding algorithms used in channel coding algorithms implemented by module **101**, depicted and described in connection with FIG. **5***a* below. By processing channel coding in step **408**, server **105** can correct potential bit errors received in message **208**, although channel coding **408** may be optionally omitted. As noted above, the use of channel coding **408** can be preferred in an embodiment, since any bit errors received within module encrypted data **403** in message **208** could break (i) a cryptographic algorithms **141** used by server **105** at subsequent steps **413**, and/or (ii) the verification of module digital signature **405** at step **410** below.

At step **409**, the server **105** can read and record the module identity **110**, if module **110** is included in message **208** as external to module encrypted data **403** as illustrated in an exemplary message **208** in FIG. **6***a* below. Although not illustrated in FIG. **4**, server **105** can select a module public key **111** for module **101** by querying a module database **105***k* with module identity **110**. Module identity **110** could comprise a string or session identifier, whereby server **105** could derive or track a module identity **110** from one message **208** to the next message **208** using the string or session identifier. By including module identity **110** in a message **208**, but external to module encrypted data **403** such as illustrated in FIG. **6***a* below, a server **105** can utilize module identity **110** in order to select a server private key **105***c* or symmetric key **127** for decrypting module encrypted data **403**. According to an exemplary embodiment, a plurality of server private keys **105***c* could be utilized, where a first private key **105***c* is used with a first set of modules **101** and a second private key **105***c* is used with a second set of modules **101**. The first and second private keys **105***c* could use or be associated with different sets of parameters **126**. By reading the module identity **110** outside of module encrypted data **403**, the module identity **110** can be read before decryption, in order to identify which of the first or second set server private keys **105***c* that a module **101** sending message **208** is associated with, and thus server **105** can subsequently select the first or second set of server private keys **105***c* to use when decrypting module encrypted data **403**.

Alternatively according to an exemplary embodiment, if server **105** operates in a distributed environment (such as comprising multiple sub-servers **105***w* as illustrated in FIG. **1***f*), an unencrypted module identity **110**, including a possibly a session identifier for module identity **110** within a message **208**, can be utilized by a message preprocessor **105***y* to select the appropriate sub-server **105***w* to process the message **208**. Server **105** using message preprocessor **105***y* could forward the message **208** to the correct sub-server **105***w*. At step **410**, server **105** can validate and verify the module identity **110** using the module digital signature **405** inserted by module **101** in message **208**. As described in FIG. **4***a* above, module digital signature **405** can comprise a secure hash signature or tag, where module **101** generated the hash signature using the module private key **112** and digital signature algorithms **141***d*. As one example, server **105** can utilize the module public key **111** recorded in memory **105***e* to securely validate the module digital signature **405** receive in a message **208**.

The module digital signature **405** can be verified according to public key infrastructure (PKI) standards such as the National Institute of Standards (NIST) "FIPS 186-4: Digital Signature Standard", or IETF RFC 6979 titled "Deterministic Usage of the Digital Signature Algorithm (DSA) and Elliptic Curve Digital Signature Algorithm (ECDSA)". Other PKI standards or proprietary techniques for securely verifying a module digital signature **405** may be utilized as well. If message **208** comprises an initial communication from module **101**, at step **412** server **105** can verify that module public key **111** is associated with module identity **110** using a module certificate **122**, where certificate **122** includes a signature **123** from a certificate authority **118**, as illustrated in FIG. **1***h*. Server **105** could receive certificate **122** before module **101** sends message **208**, or server **105** could query module **101** or another server for certificate **122** after receiving message **208**. Server **105** could use digital signature algorithms **141***d* to compare a secure hash calculated using (i) a first certificate **122** and/or public key from module **101** and (ii) a second certificate and/or public key from certificate authority **118** or another server, in order to confirm that module public key **111** is associated with module identity **110**, where module identity **110** was read from message **208** in step **409**. The secure hash could also be calculated using module public key **111** and a public key from certificate authority **118**, and other possibilities using PKI exist as well for server **105** to confirm module public key **111** is associated with module identity **110** at step **412**.

Steps **409** and **410** are not required to utilize the efficient techniques described herein, and may optionally be omitted. As one example, security could be maintained at the network layer through the use of wireless network firewall **104** and server network firewall **124**, such that only an inbound message **208** to server **105** could be received by server **105** after security methods are applied at the network layer or application layer. Note that if (A) module encrypted data **403** includes module identity **110** and/or module digital signature **405**, then (B) steps **409** and/or **410** may also take place after step **413**, where server **105** (*i*) first decrypts module encrypted data **403** and can then (ii) verify module identity **110** by performing steps **409** and **410** after step **413**. If module encrypted data **403** utilizes a symmetric cipher **141***b*, then a module identity **110** can preferably be external to module encrypted data **403** so that server **105** can select the appropriate symmetric key **127** used by module **101** in order to decipher module encrypted data **403** (since a plurality of modules **101** may communicate with server **105** concurrently).

After verifying module digital signature **405** in step **410**, server **105** can record an authenticated module encrypted data **403** from module **101** received in message **208**. At step **413**, server **105** can decrypt module encrypted data **403** using cryptographic algorithms **141** and either (i) server private key **105***c* as a decryption key with asymmetric ciphering **141***a* or (ii) symmetric key **127** with symmetric ciphering **141***b*. A symmetric key **127** may be stored in a module database **105***k*, as noted in FIG. **1***f* above. If a symmetric key **127** is used at step **413**, the symmetric key **127** could be (i) sent by server **105** in a response **209** or (ii) received by server **105** in a prior message **208**, before the message **208** illustrated in FIG. **4** was received by server **105**.

With an asymmetric ciphering **141***a* scheme used in a module encrypted data **403** and by cryptographic algorithms **141** at step **413**, server **105** can decrypt module encrypted data **403** using (i) server private key **105***c* and (ii) RSA algorithms **153**, elliptic curve cryptography (ECC) algorithms **154**, or other algorithms for public key cryptography. The use and application of RSA algorithms **153** and cryptography are described within IETF RFC 3447, among other published standards. The use and application of ECC cryptography and algorithms are described within IETF RFC 6637, among other published standards. ECC algorithms **154** may be preferred in order to maintain high security with small key lengths, compared to RSA, in order to minimize the message lengths, radio frequency spectrum utilization, and processing power required by module **101**. Thus, the use of ECC algorithms within a decryption algorithm at step **413** may help conserve the life of a battery **101***k* of module **101** while maintaining the objective of securing system **100**. Note that module encrypted data **403** may also include a security token **401** (not shown in FIG. **4**, but shown in FIG. **5***a*), which could comprise a random string, and thus each module encrypted data **403** received by server **105** in message **208** may be reasonably considered unique and thus robust against replay attacks.

With a symmetric ciphering **141***b* scheme used in a module encrypted data **403** and by cryptographic algorithms **141** at step **413**, server **105** can decrypt module encrypted data **403** using (i) symmetric key **127** and (ii) a symmetric cipher **141***b* such as AES **155**, Triple DES, or similar secure symmetric ciphers. As one example, by using ECC cryptography and ECIES, server **105** could decrypt module encrypted data at step **413** by using the steps outlined in FIG. **3**, titled "ECIES Encryption Functional Diagram" in "A Survey of the Elliptic Curve Integrated Encryption Scheme" by Martinez et al in the Journal of Computer Science and Engineering, Volume 2, August 2010, page 11, (herein incorporated by reference). Other possibilities exist as well without departing from the scope of the present invention. Server **105** can utilize step **413** illustrated in FIG. **4** to extract the plaintext, or decrypted data within module encrypted data **403**.

After decrypting module encrypted data **403**, server **105** can read the resulting data within message **208**, which could comprise a server instruction **414**. The server instruction **414** can represent the purpose of the message **208** for server **105**. Server instruction **414** could comprise a plurality of different procedures for server **105**, such as an "update" with sensor data, a "query" for data or instructions from server **105** or M2M service provide **108**, a "notification" of state or condition at module **101** such as an alarm or error, a "configuration request" where module **101** seeks configuration parameters, a "software request" where module **101** request updated software or routines, a "registration" message where module **101** periodically registers with server **105**, etc. Thus, server instruction **414** can comprise the purpose module **101** sends message **208**. In addition, server instruction **414** could comprise a "confirmation", where module **101** sends a "confirmation" in a second message **208** after receipt of a response **209**, where response **209** could include a module instruction **502** (below), and the "confirmation" in this second message **208** could signal server **105** that the module instruction **502** had been properly executed. As contemplated herein, the term "Message (update)" can comprise a message **208** that includes a server instruction **414** of "update", and the term "Message (confirmation)" can comprise a message **208** that includes a server instruction **414** of "confirmation", etc.

As examples for server instruction **414**, an "update" could be used to periodically notify server **105** of regular, periodic sensor data **305** acquired by a sensor **101***f*. An "update" for server instruction **414** may also comprise a periodic report regarding monitored unit **119** or information regarding a state, condition, or level for an actuator **101***y*. A "query" for server instruction **414** could comprise module **101** querying server **105** for data from a module database **105***k*, where the data could be associated with monitored unit **119**, wireless network **102**, an element within module **101** such as an actuator setting. A "notification" for server instruction **414** could comprise module **101** notifying server **105** that an alarm or error condition has occurred, such as a sensor measurement exceeds a threshold value or another error condition such as loss of contact with monitored unit **119**. A "configuration request" for server instruction **414** could comprise module **101** requesting server **105** for configuration parameters or a configuration file. Other possibilities for server instruction **414** exist without departing from the scope of the present invention.

At step **415**, server **105** can process the server instruction **414**. If server instruction **414** comprises an "update", then sensor data, or other data in server instruction **414** including potentially a new symmetric key **127** generated by module **101**, could be recorded in module database **105***k*, Other applications may subsequently access the sensor data for generating reports or making decisions regarding monitored unit **119**. If server instruction **414** comprises a "query", then server **105** could execute the query at step **415**. If server instruction **414** comprises a "notification" of an alarm, then step **415** could initiate procedures for alarm notification to 3rd parties or alarm resolution. Other possibilities for pro-

cessing a server instruction **414** at step **415** exist without departing from the scope of the present invention.

FIG. **5***a*

FIG. **5***a* is a flow chart illustrating exemplary steps for a server to process a response for a module, including sending and signing a module instruction, in accordance with exemplary embodiments. The steps illustrated in FIG. **5***a* may comprise step **317***a* and step **317***b* illustrated in FIG. **3** above. Since message **208** and response **209** may traverse the public Internet **107**, a module **101** and a server **105** may prefer to take additional steps to sending plaintext in packets in order to maintain security of a system **100**. Server **105** can process a response **209** to a message **208** from module **101** using a module public key **111** and a server private key **105***c*, according to a preferred exemplary embodiment. If a symmetric cipher **141***b* is utilized within cryptographic algorithms **141**, then server **105** may also utilize a symmetric key **127** to encrypt data within a response **209**. Note that the security methods described herein are optional, and message **208** and response **208** can be sent without any or all of the additional security steps described herein, but the use of these security steps may be preferred.

After receiving message **208** as illustrated in FIG. **2**, server **105** can prepare an acknowledgement **501**. The acknowledgement **501** can be a simple text, binary, or hexadecimal string to confirm that message **208** has been received and/or processed by server **105**. Since message **208** may be transmitted via a UDP or UDP Lite packet, module **101** may preferably utilize a reply message from server **105** containing acknowledgement **501**, in order to confirm message **208** has been received by server **105**. Alternatively, if TCP is used to transmit message **208**, an acknowledgement **501** may be used at the application layer of the Open Systems Interconnection (OSI) model, wherein a simple TCP ACK message may operate at the lower transport layer than the application layer. UDP may be preferred over TCP in order to reduce processing resources for module **101** and server **105**, especially considering the relatively small and comparably infrequent messages sent between a module **101** and a server **105** (when compared to web browsing and considering module **101** may have a battery **101***k* that may preferably last for weeks or longer without recharging). In processing a response **209**, server **105** may optionally add a security token **401**, which could be a random number **128***a*, or a randomly generated text, binary, or hexadecimal string. Security token **401** could be a random number **128***a* or string that is included in response **209** in order to make each response **209** unique and thus avoid any replay attacks when response **209** traverses Internet **107**. Note that a message **208** may also preferably include a security token **401**.

In other words, the use of security token **401** can ensure to a high level of certainty that each response **209** will be different and thus the data within response **209** would not be sent more than once. Note that security token **401** may be generated by module **101** in message **208**, and in this case server **105** can use the same security token received in message **208**. Security token **401** can alternatively be generated by server **105** and different than any security token **401** received in message **208**. As one example, server **105** could use a first security token **401** received in message **208** to process a second security token **401**, where the second security token **401** is generated using (i) a pre-agreed algorithm between module **101** and server **105** and (ii) the first security token **401** as input into the pre-agreed algorithm. Security token **401** illustrated in FIG. **5***a* can be derived or processed by using message **208** in accordance with preferred exemplary embodiments.

Server **105** may also optionally add a module instruction **502** when preparing a response **209**. The module instruction **502** could be a string that contains instructions or configuration parameters for module **101**, such as an order to change state, parameters regarding the monitoring of monitored unit **119**, server names or addresses, radio frequency parameters, wireless network **102** authentication parameters or keys, keys for communication with server **105** or M2M service provider **108**, etc. Module instruction **502** may also comprise an instruction to change the state of actuator **101***y*, a timer value, a sensor threshold value, the threshold for an alarm state, and information for display at a user interface **101***j*, an instruction to sleep, etc. Module instruction **502** may further comprise an updated module private key **112**, and updated server public key **114**, or the address or name of a new server **105** added to M2M service provider **108**. According to an exemplary preferred embodiment, a module instruction **502** could comprise a "key generation" instruction, where module **101** generates a new pair of a module private key **112** and a module public key **111**, utilizing the exemplary steps and procedures illustrated in FIG. **5***b* below. The "key generation" **608** module instruction **502** (illustrated in FIG. **6***a* below) could be used to create new keys for a new purpose (such as connecting to a new wireless network **102** or communicating with a new server **105**), while the existing keys used to communicate with server **105** could remain operable or be deprecated at a later time. Alternatively, an existing module public key **111** could be deprecated or become invalid once server **105** sends a "key generation" module instruction **502**.

In order to control module **101**, server **105** would normally need to include module instruction **502** in the response **209** only after receiving message **208**, since the server **105** would normally not be able to send messages to a module **101** at arbitrary times, such as before a message **208** has been received by the server **105**. The reasons include (i) the module may normally be in a sleep or dormant state, in order to conserve battery life or power consumption, where an unsolicited incoming Internet packet from server **105** would not be received by module **101**, and (ii) a wireless network **102** (or equivalent wired network that a wired module **101** could connect with) may frequently include a firewall **104**. Firewall **104** could prevent packets from the Internet **107** from reaching module **101** unless module **101** had previously first sent a packet to server **105** within a firewall port-binding timeout period **117** of firewall **104**. The port-binding timeout period of a firewall **104** may be an exemplary period such as 20-60 seconds for UDP packets and several minutes for TCP packets. Note that module instruction **502** may optionally be omitted, such that (b) some response **209** messages may include module instruction **502**, and (b) other response **209** messages may omit module instruction **502**, but include an acknowledgement **501** to message **208**. Also note that according to an exemplary embodiment described herein, the use of optional strings or steps can be depicted in FIGS. **4** and **5***a* through the use of dashed lines for the various elements illustrated.

Server **105** may then use as input the acknowledgement **501**, security token **401**, and module instruction **502**, including optional data and parameters **126**, into cryptographic algorithms **141** at step **503**. The cryptographic algorithms **141** at step **503** can utilize either (i) module public key **111** as an encryption key if asymmetric ciphering **141***a* is utilized, or (ii) a shared symmetric key **127** if a symmetric cipher **141***b* is utilized, such as AES **155** ciphering. The output of cryptographic algorithms **141** at step **503**, using acknowledgement **501**, security token **401**, and module

instruction **502**, plus optional data and parameters **126**, as input, can be server encrypted data **504**, as illustrated in FIG. **5***a*. Server encrypted data **504** could be a string or number, including a text, binary, or hexadecimal string or series of numbers or bits, and other possibilities for the formal of server encrypted data **504** exist as well, including a file, without departing from the scope of the present invention. By using module public key **111** and/or symmetric key **127** in the cryptographic algorithms **141** at step **503**, server encrypted data **504** may only be reasonably decrypted by module **101** using module private key **112** and/or symmetric key **127**. Thus the response **209** transmitted across an Internet **107** may be reasonably considered secure and only reasonably decrypted by module **101**.

Server **105** can then process server encrypted data **504** by appending or including server identity **206**. Note that server identity **206** can be appended or included after the operation of step **503**, since the server identity **206** may optionally be openly readable within a response **209** transmitted or sent to module **101**. As one example, server identity **206** could comprise IP address **106** as a source IP address in response **209**, which would be openly readable on the Internet **107** since a valid packet must have a source and destination IP address. Additional details on an exemplary structure of response **209** are illustrated in FIG. **6***a* below. By including server identity **206** after encryption at step **503**, the module can read the server identity **206** and verify a digital signature within response **209** without having to first decrypt data within response **209** using the module private key **112** or symmetric key **127**. Note that server identity **206** could alternatively be included within server encrypted data **504**, such that step **505** takes place before step **504**. In other words, including server identity **206** external to a server encrypted data **504** can be used by module **101** to select the proper server public key **114** when verifying a digital signature in response **209**.

Server **105** can then process a server digital signature **506** using the server private key **105***c*. The server digital signature **506** can be processed according to public key infrastructure (PKI) standards such as the National Institute of Standards (NIST) "FIPS 186-4: Digital Signature Standard" (which is hereby incorporated herein by reference), or IETF RFC 6979 titled "Deterministic Usage of the Digital Signature Algorithm (DSA) and Elliptic Curve Digital Signature Algorithm (ECDSA)" (which is hereby incorporated herein by reference). The use of a server digital signature **506** can be processed according to the description of a digital signature according to the Wikipedia entry for "Digital Signature" as of Sep. 9, 2013, which is incorporated by reference herein in its entirety. Also note that other uses of a digital signature as contemplated within the present invention may refer to the above three references and related standard techniques for processing and creating digital signatures. Other PKI standards or proprietary methods for securely generating a server digital signature **506** may be utilized as well.

According to a preferred exemplary embodiment, ECC algorithms for generating server digital signature **506** may be utilized in order to minimize the key length compared to RSA algorithms. Server digital signature **506** may comprise a secure hash signature using a hash algorithm such as secure hash algorithm 1 (SHA-1), or subsequent standards such as SHA-2 and SHA-3, and other possibilities exist as well. Server digital signature **506** is illustrated in FIG. **5***a* as being processed after server encrypted data **504**, but server digital signature **506** may also optionally be included in server encrypted data **504**. Step **506** may also take place before step **505**.

Also note that server digital signature **506** may preferably be included in a response **209** before module **101** begins either (i) utilizing a symmetric key **127** shown in step **413** to encrypt a module encrypted data **403**, or (ii) accept or process a module instruction **502**. After including server digital signature **506** in a first response **209** that uses asymmetric ciphering **141***a*, server **105** may omit server digital signature **506** in a second subsequent response. The second subsequent response could be a case where (i) server encrypted data **504** utilizes a symmetric key **127** for ciphering (where server **105** received the symmetric key **127** in a message **208** that utilized asymmetric ciphering **141***a* as illustrated in FIG. **4** above) and (ii) expiration time **133** of symmetric key **127** has not transpired.

Although energy may be conserved for a module **101** utilizing the exemplary steps illustrated in FIG. **5***a* and elsewhere herein, a high level of security is desirable for many "machine-to-machine" applications. A module **101** may be utilized for industrial applications or health monitoring, where the receipt of unauthorized module instructions **502** from 3rd parties could results in damages or losses. Without proper security that can include the steps illustrated in FIG. **5***a*, response **209** could include a module instruction **502**, and module **101** could potentially receive commands or instructions from sources other than server **105**, such as hackers.

FIG. **5***b*

FIG. **5***b* is a flow chart illustrating exemplary steps for a server to communicate with a module that has derived a public key and private key, in accordance with exemplary embodiments. In order to utilize communications secured with PKI techniques such as private keys, public keys, certificates, and identities, a module **101** may preferably obtain or generate these keys and utilize a module identity **110** and/or a certificate **122** in a secure manner. Given that a plurality of modules **101** may be deployed in potentially remote places, without frequent contact with end users or technicians, the use of secure PKI techniques for a module **101** can create a significant set of challenges for the generation of module public key **111** and module private key **112**, as well as properly and securely obtaining a certificate **122** with an module identity **110**. Using conventional technology, significant challenges and costs can be incurred when (i) module **101** has already been deployed, such as collecting data from a monitored unit **119**, and (ii) module **101** needs to utilize a new set of module private key **112** and module public key **111**.

Exemplary embodiments that include derivation or processing of a new module private key **112** and module public key **111** may utilize the particular steps and procedures contemplated herein, in order to minimize any potential human intervention (with related costs) while continuing to maintain or also enhance security, compared either (i) externally generating module private key **112**, and/or (ii) continuing to use the same module private key **112** for the lifetime of module **101**. Over a long period of operating time for a module **101**, such as several years or longer, there may be many reasons module **101** may need a new pair of PKI keys, such as (i) expiration of a certificate **122**, or the certificate **122** of a parent signature authority, (ii) the transfer of ownership or control of module **101**, where the prior ownership could have direct or indirect access to the module private key **112**, (iii) supporting a new server **105** that has different security requirements or a different set of param-

eters **126** (longer keys, different ECC curves, different cryptographic algorithms **141**, etc.), and/or (iv) revocation of a public key in a chain of signatures **123** associated with a certificate **122**. In the case of (ii) above, new ownership of module **101** may require a module **101** to utilize a new module private key **112** since the old ownership may have access to an old module private key **122**. In the case of (iii) above, a new server **105** may require a pair of public/private keys incompatible with a prior set of public/private keys utilized by module **101** and/or a certificate **122** for module **101**.

Other possibilities exist as well for reasons why a module **101** and/or server **105** may prefer for a module **101** to utilize a new module public key **111** and new module private key **112**. In an exemplary embodiment, module **101** may generate a new public/private key periodically in order to enhance the security of a system **100**. A benefit of a system **100** supporting periodic generation of keys by module **101** is that the key length can be shortened in order to obtain a similar level of security, and the processing power and energy consumption, possibly from a battery **105***k*, can be reduced through the use of shorter key lengths. In other words, over time such as several months or years, the use of a plurality of different pairs of public/private keys for module **101** with shorter key lengths can be both more secure and energy efficient than using a single pair of public/private keys with a longer key length for the lifetime of module **101**. Shorter key lengths may also be more compatible with processing power constraints of a module **101**. Thus, in exemplary embodiments, module **101** and/or server **105** may prefer for module **101** to periodically generate new public and private keys.

The general approach adopted by most mobile phone networks over the past two decades has been founded upon the use of a pre-shared secret key recorded in SIM cards, such as the Ki pre-shared secret key in 2G and 3G networks. That approach may work for mobile phones, where the SIMs can often be easily replaced, but the use of a pre-shared secret key in a SIM may not be suitable for a module **101** and M2M service provider **108** for many circumstances. As one example, significant costs may be incurred by swapping out a SIM card for already deployed modules **101**, especially if they are in remote locations or continually moving such as a tracking device on a container, pallet, truck, or automobile. In an exemplary embodiment, a module **101** may preferably record multiple pairs of public/private keys **111**/**112** for various and different functions, such as connecting to different servers **105**, connecting to different wireless networks **102**, etc. As contemplated herein, recording more than one public/private key **111**/**112** can comprise module **101** recording a plurality of pairs of module public keys **111** and module private keys **112**. In exemplary embodiments, one pair comprising a first module public key **111** and a first module private key **112** can be identified or selected from a different pair comprising a second module public key **111** and a second module private key **112** using a module public key identity **111***a*.

The number of pairs of public/private keys useful to a module **101** concurrently could be several, such as an exemplary three or more actively used public/private keys, although other possibilities exist as well. Manually trying to change or add a new SIM card each time a new security key is required may not be efficient or feasible. Or in another exemplary embodiment, the multiple pairs of private and public keys could be used in sequence, such that module **101** with server **105** utilizes a single module public key **111** and module private key **112** at any given point in time. In the case where module **101** (*i*) uses more than one private key **112** and more than one public key **111** and (ii) derives at least one module private key **112** and one public key **111** during the lifetime of module **101**, this case may be considered module **101** using a plurality of module private keys **112** and using a plurality of module public keys **111**. In the case where module **101** derives or generates more than one module private key **112** and module public key **111** during the lifetime of module **101**, this case may be considered module **101** deriving a plurality of module private keys **112** and module public keys **111**, or also deriving a plurality of pairs of module public keys **111** and module private keys **112**. The various pairs in the plurality may use different sets of parameters **126** or the same set of parameters **126**. The plurality of module public keys **111** and module private keys **112** can be processed by a CPU **101***b* with key pair generation algorithms **141***e* and a random number generator **128**. The random number generator **128** can use input from a sensor **101***f*, a radio **101***z*, and/or temporary random seed file.

In exemplary embodiments, module **101** can use a module public key **111** for sending a module encrypted data **403** or receiving a server encrypted data **504** by either (i) sending the module public key **111** to a server **105** in order to allow the module encrypted data **403** to be decrypted (such as using a step **413**) or the server encrypted data **504** to be encrypted (such as using a step **503**), or (ii) inputting the module public key **111** into a key derivation function **141***f* in order to derive or process a derived shared secret key **129***b*, which could be used with a symmetric key **127**. Other possibilities exist as well for module **101** to use its own public key **111** with cryptographic algorithms for communicating with a server **105**.

FIG. **5***b* illustrates exemplary steps that can be performed with module **101**, including using a module program **101***i*, for generating, deriving, and/or updating a module public key **111** and module private key **112**. The steps illustrated in FIG. **5***b* include both (i) an "initial" or "startup" case where module **101** has not previously derived keys (or keys not internally derived may not have been loaded), and (ii) a subsequent or "follow on" time where module **101** can generate or derive keys after keys were initially obtained or derived. Note that efficient and secure methods and systems contemplated herein, including in FIG. **5***b*, may also be utilized with a regular consumer mobile phone, or smartphone, as a module **101**. Mobile phones as module **101** can benefit from (i) deriving a module public key **111** and a module private key **112**, (ii) sending module encrypted data **403** in a message **208** using the derived keys, and (iii) receiving a server encrypted data **504** in a response **209** also using the derived keys. In the exemplary embodiment where module **101** comprises a mobile phone, then sensor **101***f* may comprise a microphone and actuator **101***y* may comprise a speaker, and other possibilities exist as well to those of ordinary skill in the art for module **101** to comprise a mobile phone.

At step **511**, during manufacturing of module **101**, including manufacturing of subcomponents such as a circuit board, assembly of hardware components illustrated in FIG. **1***b*, etc., a module identity **110** could be written into the hardware, and could comprise a serial number, International Mobile Equipment Identity (IMEI) number, Ethernet MAC address, or a similar persistent identification for a module **101**. An IEMI number may be used with a mobile phone as module **101**, in a preferred embodiment. For security purposes, the module identity **110** may preferably be written into a read-only location, such as a readable location on a

system bus **101***d*, which could also comprise a ROM **101***c*. Recording and utilizing module identity **110** is also depicted and described in connection with FIG. **1***e*, FIG. **2**, and elsewhere herein. Alternatively, module identity **110** could be recorded in a non-volatile memory such as a flash memory **101***w*.

At step **512**, module **101** can be distributed to end users and also installed with a monitored unit **119**. If module **101** is a mobile phone, then monitored unit **119** could be a person that carries the mobile phone. Also note that a monitored unit **119** could be omitted, and a module **101** could use the techniques contemplated herein. At step **513**, a shared secret key **510**, parameters **126**, and a server address **207** can be recorded in a nonvolatile memory **101***w*. Parameters **126** may comprise settings for a cryptographic algorithms **141** as illustrated in FIG. **1***g*, including (i) key lengths, (ii) algorithms to utilize for key generation or ciphering, such as selecting RSA algorithms **153** or ECC algorithms **154**, (iii) a specific secure hash algorithm **141***c* to utilize, such as SHA-256 or SHA-3, (iv) an expiration date of the module public key **111**, (v) a maximum time value for an expiration time **133** associated with a symmetric key **127**, (vi) a ECC parameters **137** or an ECC standard curve **138** as parameters **126** in FIG. **1***h*, (vii) the specification of or values for a padding scheme for use with a digital signature algorithms **141***d*, and/or similar or related values for using cryptographic algorithms **141***d*. Although not illustrated in FIG. **5***b*, at step **512** a configuration file could also be loaded into non-volatile memory, where the configuration file includes a plurality of fields specifying the operation of module **101**. The shared secret key **510**, parameters **126**, and server address **207** could be included in a configuration file.

Continuing at step **513**, server identity **206** could be utilized in place of or in addition to server address **207**, and in this case module **101** can later perform a DNS or DNSSEC lookup using server identity **206** in order to obtain server address **207** for use in a message **208**, such as the destination address. Shared secret key **510** and server address **207** (or server identity **206**) could also be recorded in a ROM **101***c* at step **513**. Step **513** may also be performed concurrently with step **511** or step **512**. According to an exemplary embodiment, a manufacturer may perform step **513** and in this case step **513** could take place concurrently with step **511**. In another embodiment, a distributor of module **101** could perform step **513** and in this case step **513** could take place concurrently with step **512**. Alternatively, step **513** may be performed by a technician or end user after manufacturing and distribution and before module **101** begins collecting sensor data with a monitored unit. Other possibilities exist as well for the sequence of steps **511** through **513** illustrated in FIG. **5***b* without departing from the scope of the present invention.

Note that step **513** may take place multiple times during the lifetime of a module **101**, and in this case (a) the first time step **513** is conducted, step **513** could be conducted concurrent with steps **511** or **512**, and (b) a subsequent time step **513** is conducted, step **513** could be conducted after the receipt of a response **209**, where the response **209** includes a second shared secret key **510**, server address **207**, and also potentially a new module identity **110**. In other words, although not illustrated in FIG. **5***b*, a module **101** could return to step **513** from later steps upon the equivalent of a "factory reset", or similar command where flash memory **101***w* and other nonvolatile memory would be cleared. In an exemplary embodiment where step **513** takes place a second time may potentially be the transfer of ownership or control of module **101**, or a another embodiment where step **513** takes place a second time could be the upload of new firmware that is incompatible with a previous configuration file. In any case, shared secret key **510** can preferably be uniquely associated with module **101** (i.e. any given shared secret key **510** may belong only to an individual module **101**).

Shared secret key **510** may comprise a pre-shared secret key **129***a*, as described in FIG. **1***e*. If module **101** has already derived a module private key **112** and module public key **111** (such as when step **513** is being conducted at a second or additional time as contemplated in the previous paragraph), then shared secret key **510** may comprise (i) a key received in a server encrypted data **504** including possibly a symmetric key **127**, or (ii) a derived shared secret key **129***b*. Derived shared secret key **129***b* could be obtained from using a key derivation function **141***f* and module public key **111** and server public key **114**, using a module public key **111** that has already been derived or used by module **101** (such as if at least one module private key **112** and module public key **111** had already been used or derived before step **513**).

As contemplated herein in an exemplary embodiment, an first module private key **112** and first module public key **111** could be derived outside module **101** and loaded into a nonvolatile memory such as flash memory **101***w* at a prior time before step **513**, and the shared secret key **510** could be received by module **101** using the first module private key **112** and module public key **111** (such as receiving the shared secret key **510** in a server encrypted data **504** using the first module private key **112** which had been loaded). Step **513** could then comprise a later time after the server encrypted data **504** has been received that includes the shared secret key **510**, where module **101** may (i) prefer to begin utilizing keys that module **101** internally derives using cryptographic algorithms **141** instead of (ii) continuing to use the first module public key **111** and module private key **112** that were derived outside of the module **101**, such as possibly loaded into a nonvolatile memory from an external source.

In the embodiment where shared secret key **510** has not been received by module **101** in a server encrypted data **504**, shared secret key **510** could be obtained and loaded by a distributor, installer, or end user into a nonvolatile memory such as flash memory **101***w* in the form of a pre-shared secret key **129***a*, where pre-shared secret key **129***a* was obtained using a module identity **110** and pre-shared secret key code **134** as depicted and described in connection with FIG. **1***e* above. Module **101** could also utilize a first pre-shared secret key **129***a*, including a first pre-shared secret key **129***a* entered by potentially a distributor, installer, or end-user described in FIG. **1***e*, to derive shared secret key **510**. Other possibilities exist as well for shared secret key **510**, and shared secret key **510** can be useful for the proper identification and/or authentication of module **101** upon module **101**'s generation of a private key **112** and public key **111**, as described below including step **517**. If module **101** is a mobile phone, as contemplated herein, shared secret key **510** could be loaded by a distributor or company selling or servicing the mobile phone, or shared secret key **510** could be obtained by the end user or subscriber accessing a web page associated with a mobile operator for a wireless network **102** associated with the mobile phone and/or SIM card.

Also note that as contemplated herein, an initial module private key **112** and initial module public key **111** could be recorded into nonvolatile memory at step **513**. For example, a manufacturer, distributor, installer, technician, or end-user could load the initial module private key and initial module

public key **111**, where the initial module public key **111** would be utilized to authenticate at step **517** a subsequent set of public/private keys derived by module **101** at step **515**. In this case, the initial module public key **111** and/or initial module private key **112** described in the previous two sentences could comprise the shared secret key **510**. One reason the initial module private key **112** with the initial module public key **111** would comprise a shared secret key **510** may be that (i) the initial module private key **112** and initial module public key **111** together have been "shared" in the sense that the initial module private key **112** has been located outside module **101** and in possession of an entity such as the manufacturer, distributor, installer, technician, or end-user in order to load the initial module private key into a nonvolatile memory such as flash memory **101***w* (and initial module public key **111** is subsequently shared with server **105**), (ii) the initial module private key **112** and initial module public key **111** can be used to authenticate a subsequent message **208** containing a public key internally derived by the module at step **517** below, and (iii) the initial module private key **112** would remain "secret" in the sense that it is not publicly shared (i.e. an initial or "loaded" module private key **112** could preferably kept confidential and thus part of a "shared secret key"). Thus, FIG. **5***b* also contemplates an embodiment where shared secret key **510** at step **513** comprises an initial public/private key pair for module **101** that is not internally derived by module **101**, including keys derived at step **515**.

Note that the contemplation of the use of shared secret key **510** as a pre-shared secret key **129***a* within the present invention may be different than the use of a pre-shared secret key within a SIM card as commonly supported by wireless networks **102** with mobile phones in 2013. Specifically, as depicted and described in connection with FIG. **1***e* and elsewhere herein, the shared secret key **510**, either (i) comprising a pre-shared secret key **129***a* or (ii) derived from a pre-shared secret key **129***a*, may be moved by CPU **101***b* into a volatile memory such as RAM **101***e*, with subsequent access by cryptographic algorithms **141**. In contrast, the pre-shared secret key within a SIM card for mobile phones is usually designed to prevent movement of the pre-shared secret key within a SIM into RAM **101***e*.

If a SIM card is present within module **101**, and the SIM card contains a pre-shared secret key, such as Ki, then as contemplated herein, shared secret key **510** may be derived using the SIM card and Ki. As one example, module **101** could (i) utilize a RAND message, potentially received from a 3G or 4G mobile network such as wireless network **102**, and (ii) input the RAND into the SIM card and receive a response RES (or SRES), and utilize the string in RES to process or derive a shared secret key **510**. Response RES could also comprise a shared secret key **510**. Server **105** could also submit the same RAND associated with the SIM card and Ki to wireless network **102**, and receive the same RES as obtained by module **101**. By both module **101** and server **105** having the same RES value, they can follow a pre-agreed series of steps to use the same RES in order to derive a commonly shared secret key **510** (or the shared RES could comprise a shared secret key **510**). In one embodiment where module **101** includes a SIM card for a wireless network **102**, such as a 4G LTE network, module **101** and server **105** could both utilize a key derivation function **141***f*, using the same RES as input, in order to derive the same shared secret key **510**.

At step **514**, module **101** can read module identity **110** using a read-only address. Module **101** can read module identity **110** directly from read-only hardware address by using system bus **101***d*, including from a ROM **101***c*, or module **101** can read module identity **110** from a nonvolatile memory such as a flash memory **101***w*. Thus, the read-only address could comprise an address accessible on system bus **101***d* that is designated read-only for a period of time. The module identity **110** could be recorded into a flash memory **101***w* by module **110** after a prior read of module identity **110** from a read-only address. In this case (module **101** taking the step described in the previous sentence), reading module identity **110** from the nonvolatile memory at step **514** can also comprise module **101** reading module identity **110** using a read-only address. Thus, although module **101** may read module identity **110** from a flash memory **101***w*, if (a) module **101** initially utilized a read-only address to record the module identity **110** into the flash memory **101***w*, then (b) reading module identity **110** from the flash memory **101***w* could comprise using a read-only address to read module identity **110**. Other possibilities exist as well, such as the address that includes module identity **110** in either (i) a nonvolatile memory such as a ROM **101***c* or (ii) an address accessible on system bus **101***d*, could be designated for a period of time as available for a read-only operation. Step **514** could also take place after step **515** below.

At Step **515**, module **101** can derive module private key **112** and a corresponding module public key **111** using (i) random number generator **128**, (ii) parameters **126**, (iii) cryptographic algorithms **141**, and/or (iv) a key pair generation algorithm **141***e*. Module **101** at step **515** and elsewhere in the present invention can be a mobile phone such as a smartphone. Private key **112** and corresponding module public key **111** can be derived according to a wide range of parameters **126**, and can utilize different algorithms for different pairs of keys, such as RSA **153** or ECC **154**. Key derivation at step **515** could generate keys of various lengths, such as 2048 bits with RSA **153** or 283 bits with ECC **154**, and other possibilities exist as well. If using ECC **154** to derive a pair of keys for module **101**, step **515** could also accommodate the use of different elliptic curves for compatibility with server **105**, such as the use of odd-characteristic curves, Koblitz curves, and making sure the derived keys by module **101** use a compatible or identical elliptic curve or defined elliptic curve equation as server **105**, etc. Module **101** can use ECC parameters **137** or an ECC standard curve **138** in a parameters **126** to derive module private key **112** and/or module public key **111**.

Deriving keys in step **515** could also comprise using values such as constants or variables in a parameters **126** to define an elliptic curve equation for use with an ECC algorithm **154**. The values or constants to define an equation for an elliptic curve could be input into a key pair generation algorithms **141***e* in the form of ECC parameters **137** or an ECC standard curve **138**. In an exemplary embodiment, where a parameters **126** does not include constants and variables for defining an elliptic curve equation, a key pair generation algorithms **141***e* could use pre-defined elliptic curves with ECC algorithms **154** such as standardized, named curves in ECC standard curve **138** including exemplary values such as sect283k1, sect283r1, sect409k1, sect409r1, etc. Exemplary, standardized named curves, as opposed to module **101** and server **105** using an internally generated elliptic curve equation using parameters **126**, are also identified as example curves in IETF RFC 5480, titled "Elliptic Curve Cryptography Subject Public Key Information". Thus, module **101** could use either standardized elliptic curves, or a separate defined elliptic curve equation as specified in a parameters **126**.

The curve for module **101** to utilize in deriving module public key **111** and module private key **112** at step **515** could be specified in parameters **126**. Consequently, the parameters of keys generated by module **101** at step **515** (including key length or algorithms utilized) may be selected based upon the requirements of the application and can be included in a parameters **126**. When deriving keys at step **515**, module **101** may also preferably utilize data from sensor **101***f*, radio **101***z*, a bus **101***d*, a physical interface **101***a*, memory **101***e*, and/or a clock in order to generate a seed **129** for random number generator **128**, or random number generator **128** could utilize these inputs directly. A random number **128***a* can be input into key pair generation algorithm **141***e* in order to derive the module public key **111** and module private key **112**. Note that with ECC algorithms **154**, a module private key **112** can be a random number **128***a* in one embodiment, and the module public key **111** can be derived with a key pair generation algorithms **141***e* using the module private key **112** comprising the random number **128***a*.

Upon key derivation at step **515**, module private key **112** and module public key **111** can be recorded in a nonvolatile memory **101***w*. Module private key **112** is preferably not transmitted or sent outside module **101**. Note that module **101**'s internal derivation, or processing or creation, of module private key **112** and corresponding module public key **111** can have many benefits. First, module private key **112** does not need to be recorded in any other location than within module **101**, and thus may also be considered not shared. Recording module private key **112** only within module **101** avoids potential security risks of (i) storing or recording module private key **112** in other locations, such as with module provider **109**, M2M service provider **108**, or an installer or end user of module **101**, and (ii) transferring module private key **112** to and/or from these other locations. One security risk from storage of module private key **112** outside module **101** is that unauthorized 3rd parties may gain access to the module private key **112**.

Also note that over a potential lifetime of a decade or more of operation of module **101**, each time a new module private key **112** may be required (for various potential reasons outlined above), the external recording and/or transferring of module private key **112** incurs a potential security risk. Security risks can be compounded if the external location records private keys **112** for a plurality of modules **101**. Also, by internally generating private key **112** at step **515**, module **101** can overcome significant limitations and costs requiring the distribution of a pre-shared secret key Ki in the form of a SIM card or similar physical distribution of a pre-shared secret key, after module **101** begins operations. In comparison, the use of a shared secret key **510** in the present invention does not require physical distribution of a new shared secret key **510** after module **101** begins operations. Module **101**'s key derivation could be triggered by either (i) a bootloader program **125**, where the bootloader program **125** determines that memory within module **101** does not contain a module private key **112**, or (ii) via a module instruction **502** such as a "key generation" command in a response **209** from a server, and other possibilities exist as well.

Note that module **101**'s generation of keys after deployment and installation may create challenges for authentication of a new module public key **111** with module identity **110**, since module **101** may be connecting to server **105** or M2M service provider **108** via the Internet **107**. After module **101** creates new module public key **111** and module private key **112** at step **515**, at step **516** server **105** can receive a message **208** with the module identity **110**, the new module public key **111**, and parameters **126**. Parameters **126** in message **208** at step **516** can represent the parameters **126** used to generate the module public key **111**. The sub-steps for a server **105** to receive a message **208** are also depicted and described in connection with FIG. **2** above. Parameters **126** within a message **208** can comprise descriptive values for new module public key **111**. Note that at step **516**, server **105** does not need to receive new module public key **111** in the form of a certificate **122** (although it could be in the form of a certificate **122**). New module public key **111** could be received by server **105** within a string or field within a body **602** of a TCP/UDP packet **601***a*, illustrated in FIG. **6***b* below. As depicted in step **516** shown in FIG. **6***b* below, message **208** can also optionally include a module public key identity **111***a*, which can be recorded in module database **105***k* along with module identity **110** and module public key **111***a*.

According to an exemplary embodiment, a first source (IP:port) number received in a first message **208** at step **516** can be different than a second source IP:port number in a second message **208** at step **518** below, wherein a response **209** send in step **519** below can preferably be sent to the second source IP:port number received in the second message **208** at step **518** in order to traverse a firewall **104** (as depicted and described in connection with packet **209***a* in FIG. **2**). In other words, the proper destination IP:port for a response **209** to a module **101** can change over time, such as the proper destination IP:port changing due to the use of sleep states by module **101** and/or function of a firewall **104**. Consequently, according to an exemplary embodiment, a response **209** can utilize a destination IP:port number equal to the source IP:port number received in the last message **208** from module **101** received by server **105**.

At step **517**, server **105** can authenticate the message **208** received in step **516** using the shared secret key **510** described in step **513**. Server **105** could record the shared secret key **510**. If step **517** occurs for the first time in a lifetime of module **101**, then shared secret key **510** could comprise a pre-shared secret key **129***a* recorded by server **105** in a module database **105***k* illustrated in FIG. **1***f*. If step **517** occurs at subsequent time, then server **105** could have sent shared secret key **510** in a server encrypted data **504** and recorded shared secret key **510** in a module database **105***k* for later use (such as at step **517**). Server **105** can authenticate the message **208** according to message digest, or using the shared secret key **510** as a symmetric key **127** within a symmetric ciphering algorithm **141***b*, where the successful encryption and decryption of data within message **208** using the shared secret key **510** on both ends could be confirmation that message **208** is authenticated, since both parties would only be able to mutually encrypt and decrypt by sharing the same shared secret key **510**.

Other possibilities exist as well for server **105** to use a shared secret key **510** in order to authenticate a message **208** that contains a new module public key **111** (where module **101** contains a new module private key **112**). In one embodiment, message **208** in step **516** could include a module digital signature **405**, where the module **101** used the shared secret key **510** as a private key to generate the module digital signature **405**. After receiving authenticated new module public key **111** in steps **516** and **517**, according to a preferred exemplary embodiment, server **105** can preferably only accept and process (A) either incoming (i) a symmetric keys **127** ciphered with a asymmetric ciphering algorithm **141***a*, and/or (ii) incoming server instructions **414**, when (B) the next or a subsequent incoming message **208** from module **101** using module identity **110** also includes a valid module

digital signature **405** verified by using the new module public key **111**, received at step **516**.

According to an exemplary embodiment, shared secret key **510** can be associated with a module public key identity **11***a*, and shared secret key **510** can be used to authenticate a particular value for a module public key identity **111***a*. In this embodiment, (i) a message **208** with module public key **111** and a first module public key identity **11***a* may be authenticated using a shared secret key **510**, but (ii) a second message with module public key **111** and a second module public key identity **111***a* may not be authenticated using the same shared secret key **510**. Thus, in accordance with an exemplary embodiment, shared secret key **510** can be used for both (i) a single time for authenticating a module public key **111**, and (ii) authenticating a module public key **111** with a particular value for the module public key identity **111***a*. Note that module public key identity **111***a* can be particularly useful with key revocation, such that a key revocation could specify a particular module public key identity **111***a* (associated with a particular module public key **111**) to be revoked, but other module public keys **111** with different module public key identities **111***a* could remain valid and not revoked.

Although not illustrated in FIG. **5***b*, server **105** could operate with a certificate authority **118** in order to utilize a new module public key **111**, as described in this paragraph. At step **516**, new module public key **111** could be received by server **105** in the form of a uniform resource locator (URL) or domain name for download of a certificate **122** corresponding to the new module public key **111**. If new module public key **111** is included in a certificate **122** in this embodiment of step **517** (or a URL to the certificate **122**), then module **101** could send server **105** a URL or address on the Internet **107** where server **105** could download the new module public key **111**, such as if module **101** had a certificate authority **118** sign the new module public key **111**. In this case, (i) the certificate authority **118** (or a separate server than server **105**) could perform the steps of **516** and **516** before server **105** conducts step **518** below, and (ii) certificate authority **118** would need some confirmation module **101** using module identity **110** was the correct owner of new module public key **111**. Certificate authority **118** could authenticate module **101** using the shared secret key **510** (instead of server **105** authenticating module **101** directly with the shared secret key **510**). Other possibilities exist as well for module **101** to utilize shared secret key **510** to authenticate a module public key **111** that has been derived by module **101**.

After steps **516** and **517**, server **105** can update a module database **105***k* using the module identity **110** to insert or update the new module public key **111**, and parameters **126** associated with new module public key **111**. Server **105** may communicate with a plurality of modules **101**, and thus could utilize a module database **105***k* in order to record the new module public key **111** and parameters **126** with the module identity **110**. In one embodiment, the module identity **110** could preferably operate as an index within a table of module database **105***k* in order to speed reads and writes from the table used with module public key **111**, parameters **126**, and also selecting a symmetric key **127** for a symmetric ciphering algorithm **141***b* in later messages. As described in FIG. **1***g*, parameters **126** can include data useful for the operation of cryptographic algorithms **141** and module public key **111**. According to a preferred exemplary embodiment, some modules **101** in a system **100** could utilize a first elliptic curve, such as using a first set of ECC parameters **137** or first ECC standard curve **138** within a parameters **126**, and other modules **101** could utilize a second and different elliptic curve within a parameters **126**, such as a second set of ECC parameters **137** or second ECC standard curve **138**.

After updating the new module public key **111**, in step **518** of FIG. **5***b*, server **105** could receive a second message **208**, and the second message **208** can include a module identity **110** and module encrypted data **403**. Although not illustrated in FIG. **5***b*, the second message **208** could also include a module digital signature **405**, wherein the module digital signature is created with the new module public key **111** received in step **516**. Server **105** could then utilize the steps illustrated in FIG. **4** in order to process the incoming message **208** with the new module public key **111**, including using the module identity **110** received in the second message **208** to select the new module public key **111** and subsequently verify a module digital signature **405** using the new module public key **111** and digital signature algorithm **141***d*. Also as discussed in FIG. **4** in connection with processing a received message **208**, server **105** could decrypt the module encrypted data **403** in the second message **208** by using server private key **105***c*. In one embodiment, the second message **208** as illustrated in FIG. **5***b*, which could be the next message after authenticating module public key **111** in step **517**, could include a symmetric key **127**.

The module encrypted data **403** in step **518** could include a symmetric key **127** for utilization with a symmetric cipher **141***b*. Module **101** could also send sensor data in a module encrypted data **403** at step **518**. Or, at step **518** the second message **208** could be a signal for server **105** to use a key derivation function **141***f* with the server public key **114** and the new module public key **111** (received at step **516**) to create a new derived shared key **129***b* for use with symmetric ciphering algorithms **141***b* in subsequent messages **208**. If the second message **208** in step **518** comprises a signal for server **105** to derive a new derived shared key **129***b*, then this second message **208** could then optionally leave off module encrypted data **403** and/or a module digital signature **405**. The successful use of a new derived shared key **129***b* (using the new module public key **111** and existing server public key **114**) with symmetric ciphering algorithms **141***b* at subsequent steps by both module **101** and server **105** can indicate to each the communications are mutually authenticated. Second message **208** could also include a server instruction **414**, and other possibilities exist as well without departing from the scope of the present invention.

At step **519**, server **105** can send a response **209** to module **101**, where the response **209** includes server encrypted data **504** and a module instruction **502**. Server **105** could take the steps to create and send response **209** as depicted and described in connection with FIG. **5***a*. Response **209** could be formatted according to the exemplary response **209** illustrated in FIG. **6***a*. The module instruction **502** could be an acknowledgement **501** that the second message **208** sent in step **518** was received by server **105**. At step **520**, server **105** can receive a third message **208** with a confirmation **414** to server **105**. Confirmation **414** can be used to signal proper execution of module instruction **502**, if module instruction **502** comprised an instruction other than an "ACK" or acknowledgement **501**. If module instruction **502** in step **519** was an acknowledgement **501** from server **105**, then the confirmation **414** may omitted and in this case step **520** could be skipped.

At step **521** server **101** can determine or evaluate if a new module public key **111** and/or certificate **122** are required for continued operation. One reason for the need of new keys could be the expiration of a certificate **122** for module **101**,

or the desire to utilize a different set of parameters **126** such as a longer key length for increase security or the use of a different ECC parameters **137** or a different ECC standard curve **138** with cryptographic algorithms **141**. As described elsewhere herein, many other possibilities exist for reasons why module **101** and/or server **105** can prefer for module **101** to utilize a new module public key **111** and new module private key **112**. Either server **105** or module **101** may determine that the use of a new module public key **111** and new module private key **112** may be preferred at step **521**. If module **101** determines that the use of a new module public key **111** and new module private key **112** is preferred or desirable, module **101** could send server **105** a signal that new keys will be generated either before step **521** or at step **521**.

Upon determining new keys are desirable at step **521**, then server **105** could instruct module **101** to derive new private and public keys by returning to step **515**. Although not illustrated in FIG. **5***b*, upon determining "yes" at step **521**, server **105** could send a module instruction **502** of "new key generation" and also a new set of parameters **126** to utilize with the new module private key **112** and module public key **111**. In accordance with exemplary embodiments, module instruction **502**, including the "new key generation" instruction and set of parameters **126**, can be sent in a response **209** both (i) after module **101** wakes from a sleep or dormant state and sends a message **208** after waking from the sleep or dormant state, and (ii) before the expiration of a firewall port binding timeout value **117** after receiving the message **208**. If server **105** determines that new keys are not required or desirable at step **521**, server **105** can then proceed to step **312** and wait for additional incoming messages **208** from module **101** or other modules. Step **312** is also depicted and described in connection with FIG. **3**.

FIG. **6***a*

FIG. **6***a* is a simplified message flow diagram illustrating an exemplary message received by a server, and an exemplary response sent from the server, in accordance with exemplary embodiments. FIG. **6***a* illustrates exemplary details within message **208** received by server **105** and also response **209** sent by server **105**. Message **208** may comprise a TCP/UDP packet **601***a* sent from module **101** source IP:port **204** to server **105** destination IP:port **207**. According to an exemplary embodiment, UDP or UDP Lite formatting for TCP/UDP packet **601***a* may be preferred. Source IP:port **204** and destination IP:port **207** in message **208** may be included within a header in TCP/UDP packet **601***a*. Although a single message **208**, response **209**, module **101**, and server **105** are shown in FIG. **6***a*, system **100** as illustrated in FIG. **2** may comprise a plurality of each of these elements. As contemplated herein, the term "datagram" may also refer to a "packet", such that referring to an element as datagram **601***a* can be equivalent to referring to packet **601***a*.

TCP/UDP packet **601***a* may include a body **602**, which can represent the data payload of TCP/UDP packet **601***a*. The data payload of message **208** can optionally include channel coding **406** as described in FIG. **4** above, if the transport protocol for TCP/UDP packet **601***a* supports the transmission of bit errors in the body **602** (as opposed to entirely dropping the packet), such as with the UDP Lite protocol. Support for the transmission of bit errors in body **602** by wireless network **102** would be preferred over entirely discarding a packet, since the programs such as module controller **105***x* could include support for and utilization of channel coding **406**. Without UDP Lite formatting, message **208** can alternatively sent by module **101** as a UDP datagram, such as if wireless network **102** (or a wired connection) does not support the UDP Lite protocol. Note that in this case (no support for the transmission of bit errors in a body **602**), wireless network **102** and nodes within Internet **107** would preferably include channel coding on the data link layers of the OSI stack in order to maintain robustness to bit errors at the physical layers of various hops along the path between module **101** and server **105**.

Note that if (A) message **208** comprises (i) regular UDP or TCP formatting (i.e. not UDP Lite or similar variations) within an IPv6 network, or (ii) a UDP or TCP format within an IPv4 network with a **603** enabled, then (B) channel coding **406** may optionally be omitted. Checksum **603** can comprise a value to for an integrity check of a packet **601***a*, and the calculation and use of checksum **603** is defined in IETF standards for TCP and UDP packets. In accordance with a preferred exemplary embodiment, including the use of IPv6 for Internet **107** and a UDP datagram for message **208** and response **209**, a checksum **603** sent by module **101** in a message **208** does not equal a checksum **603** in the message **208** received by server **105**.

The body **602** can include a module identity **110**, module encrypted data **403**, and channel coding **406**. Although not illustrated in FIG. **6***a*, body **602** could also include a module digital signature **405**, as illustrated in FIG. 6 of U.S. patent application Ser. No. 14/039,401. Module identity **110** is illustrated in FIG. **6***a* as external to module encrypted data **403**, although module identity **110** may optionally only be included in module encrypted data **403**, and in this case module identity **110** would not be external to module encrypted data **403** in a body **602**. By including module identity **110** as external to module encrypted data **403**, server **105** can use the unencrypted module identity **110** in order to select either (i) the appropriate module public key **111** to verify module digital signature **405** if an asymmetric cipher **141***a* is used within cryptographic algorithms **141**, or (ii) the appropriate symmetric key **127** within cryptographic algorithms **141** to decrypt the module encrypted data **403**. Module public key **111** and symmetric key **127** may preferably be recorded in a database **105***d*, such that server **105** can access a plurality of public keys using module identity **110** in body **602** for a plurality of modules **101**.

Thus, by including module identity **110** external to module encrypted data **403**, server **105** can utilize the module identity **110** to query a database **105***d* and select the appropriate module public key **111** or symmetric key **127**. As noted previously, module identity **110** could comprise a string or number that is uniquely associated with module identity **110**, such as a session identity, as opposed to being a module identity **110** that is read from hardware in module **101** such as an IMEI number, Ethernet MAC address, etc. Module identity **110** is illustrated in FIG. **6***a* as a session identity that is a different representation of module identity **110** of a serial number such as in FIG. **2**, but in both cases the values can comprise a module identity **110** since the values can be uniquely associated with module **101** at any point in time.

According to an exemplary embodiment where asymmetric ciphering **141***a* of module encrypted data **403** is utilized, such as (i) the first message **208** sent by module **101** and (ii) where a symmetric key **127** had not been previously exchanged, module identity **110** can be (a) within module encrypted data and (b) not external to module encrypted data **403**. In this case, server **105** can utilize server private key **105***c* to, in sequence, decrypt module encrypted data **403**, extract module identity **110** from the decrypted module encrypted data **403**, and then used the module identity **110**

to select module public key **111** from module database **105***k* in order to verify a module digital signature **405**. Note that if a module identity **110** is in body **602** and external to module encrypted data **403**, then module identity **110** could be obfuscated or otherwise ciphered according to a pre-agreed algorithm with server **105**, such that server **105** can utilize the obfuscated or ciphered module identity **110** to select a module public key **111** from module database **105***k*. The value of "[Module Identity String]" shown in FIG. **6***a* could comprise an obfuscated module identity **110**. According to an exemplary embodiment where (i) symmetric ciphering of module encrypted data **403** is utilized, such as after a first message **208** had already been sent by module **101** and a symmetric key **127** had previously been exchanged, then (ii) module identity **110** can be external to module encrypted data **403** and in body **602** in order for server **105** to utilize module identity **110** and select symmetric key **127** from a module database **105***k*, thereby enabling server **105** to decrypt the module encrypted data **403** using the selected symmetric key **127**.

The module digital signature **405** can be calculated using the steps and algorithms described in FIG. **4** above. Module digital signature **405** can be a secure hash string or number, and can be calculated using module private key **112** and digital signature algorithms **141***d*. Server **105** can verify module digital signature **405** using module public key **111** according to the standard techniques for verifying digital signatures using PKI as described at step **410** in FIG. **4**. Note that module digital signature **405** can be useful for server **105** to maintain security, since server public key **114** may be shared and potentially other nodes besides module **101** could attempt to send in encrypted data using server public key **114**.

In addition, the module digital signature **405** may optionally be omitted from body **602** after module **101** has previously sent symmetric key **127** in a previous message **208** to the message **208** illustrated in FIG. **6***a*. In other words, in a series of messages **208**, module **101** can preferably change from (i) using asymmetric ciphering **141***a* with an initial message **208** that includes symmetric key **127** in a module encrypted data **403** (where the initial message **208** also includes module digital signature **405** and module identity **110**) to (ii) using symmetric ciphering **141***b* with subsequent messages **208** without module digital signature **405** in the series (where the subsequent messages **208** can include an obfuscated module identity **110** external to module encrypted data **403** for server **105** to select the appropriate symmetric key **127**). The series of messages **208** could begin when the initial message **208** is sent by module **101** and end when expiration time **133** of symmetric key **127** has transpired, and subsequently a new series of messages **208** could begin where the first message **208** in the new series of messages changes back to asymmetric ciphering **141***a* with initial message **208** that includes symmetric key **127** in a module encrypted data **403** (where the initial message **208** also includes a new module digital signature **405**). Other possibilities exist as well without departing from the scope of the present invention.

Using a message **208** with a module digital signature **405** can be both more efficient and overall more secure than digest authentication (such as the digest authentication described in IETF RFC 2069), although using digest-based authentication may be alternatively used. First, the use of a module digital signature **405** requires only a single packet for message **208** and a single packet for response **209** for secure communication between module **101** and server **105**. The alternative digest-based authentication would normally require at least 4 packets comprising: (i) message **208**, (ii) a challenge to message **208** from server **105** with a security token **401**, (iii) a second message from module **101** with a hashed string generated using (i) the challenge, (ii) cryptographic algorithms **141**, and (iii) the module private key **112**, and then (iv) an acknowledgement from server **105**. The additional messages with digest-based authentication would thereby drain battery life faster or utilize more energy compared to using module digital signature **405**.

Second, the use of module digital signature **405** allows a system **100** to be more highly secured since (i) server **105** may need to be connected to the Public Internet **107** and receive packets from a wide range of IP addresses that are not known before messages **208** arrive, and (ii) by using module digital signature **405**, server **105** can then preferably not respond to incoming packets and messages without first receiving a properly signed module digital signature **405** (where the module identity **110** associated with module digital signature **405** could also be verified using a certificate **122** and a certificate authority public key **131**). By server **105** remaining silent to all packets except packets with a properly signed module digital signature **405**, system **100** can thereby remain more secure. In other words, according to preferred exemplary embodiments, server **105** does not send a response **209** to a first message **208** in a series of messages **208** that does not include a validated module digital signature **405** (where the validated module digital signature **405** includes a verified module identity **110**), thereby increasing security. Once at least one module digital signature **405** has been received by server **105**, then server **105** could use a symmetric key **127** to verify a module identity until a timer expiration **133** for the symmetric key **127**. Server **105** could receive a symmetric key using the message **208** illustrated in FIG. 6 of U.S. patent application Ser. No. 14/039,401, and other possibilities exist as well for securely sending and receiving a symmetric key **127**.

Module encrypted data **403** can be processed using the steps and algorithms described in FIG. **4**. Note that module encrypted data **403** as illustrated in FIG. **6***a* is shown in a plaintext form for ease of illustration, but actual module encrypted data **403** within body **602** of a packet **601***a* could be transmitted as binary, hexadecimal, Base64 binary-to-text encoding, or other encoding rules. Note that encryption by module **101** may optionally be omitted, and the server instruction **414** with corresponding data could be included within a message **208** without encryption, such as if security could be maintained at the network level. As one example in this case without encryption, server instruction **414** could be included in body **602** as plaintext. The encryption and/or security could be applied through other means, such as a secure tunnel between module **101** and server **105**, although setting up and maintaining a secure tunnel and similar or other means of security may require more processing and bandwidth resources than the efficient techniques described herein.

Module encrypted data **403** can include a server instruction **414**, a server identity **206**, a module identity **110**, a security token **401**, a timestamp **604***a*, and a sensor measurement **604***b*. The server instruction **414** can represent the purpose of the message **208** for server **105**, and FIG. **6***a* illustrates an "update" for server instruction **414**. An update for server instruction **414** could be used to periodically notify server **105** of regular, periodic sensor measurements **604***b* acquired by a sensor **101***f*. An update for server instruction **414** may also comprise a periodic report regarding monitored unit **119**, and a server instruction **414** is described in FIG. **4**. Other server instructions **414** besides an

"update" may be included in a module encrypted data **403** within a body **602**. The "update" illustrated in message **208** in FIG. **6***a* can also include a new symmetric key **127**, and the module encrypted data **403** illustrated in FIG. **6***a* may comprise the use of either an asymmetric ciphering **141***a* with public/private keys, or (ii) symmetric ciphering **141***b* with a symmetric key **127**.

An initial transmission or negotiation of a symmetric key **127** may preferably utilize asymmetric ciphering **141***a* and the use of a public key as an encryption key and a private key as a decryption key. Subsequent transmission of a new symmetric key **127** may utilize either (i) a symmetric cipher **141***b* with a previously negotiated but still valid symmetric key **127** (i.e. expiration time **133** has not transpired), or (ii) asymmetric ciphering **141***a*. If the data within instruction **414** is longer than the maximum data length supported by a selected asymmetric ciphering algorithm **141***a* and the public/private key pair, then module encrypted data **403** within message **208** can be broken up into several sections, such that the data within each section is less than the maximum data length supported by the asymmetric ciphering algorithm **141***a* and key length.

Server identity **206** within module encrypted data **403** can be useful for properly identifying that server **105** is the proper recipient and final destination of message **208**. Server identity **206** can be useful if a plurality of servers **105** is utilized by an M2M service provider **108** with potentially hundreds of thousands or millions of modules **101**. In this case, with a plurality of servers **105**, server private key **105***c* may represent a private key that is shared among a plurality of servers **105**, since otherwise server **105** may not be able to decrypt module encrypted data **403** if each server **105** in the plurality of servers **105** did not share the common server private key **105***c*. Continuing in this example of a plurality of servers **105**, a server identity **206** may represent a server that associated with M2M service provider **108** but not the recipient of message **208**. In this case, (i) a first server **105** could receive message **208** and decrypt message **208** using a common server private key **105***c* or symmetric key **127**, and (ii) the first server **105** can forward message **208** to the second server **105** (not shown) with server identity **206**. In this case, the first server **105** can forward message **208** to the second server (not shown) without the encryption applied to module encrypted data **403**, since (i) the second server **105** may not have access to the server private key **105***c* and/or symmetric key **127**, or (ii) the first server **105** could have already decrypted the module encrypted data **403** in order to read server identity **206** within module encrypted data **403**.

Module identity **110** within module encrypted data **403** can represent the identity of module **110**, and could represent a serial number read by module **101** from a read-only hardware address. Module identity **110** is described in FIG. **1***c* and can represent a unique identifier of module **101**. Module identity **110** outside module encrypted data **403** can represent a string or number that is different than a serial number that can be used by module **101** within a module encrypted data **403**. Security token **401** within module encrypted data **403** can represent a random string in order to make message **208** reasonably unique and thus system **100** in FIG. **2** robust against replay attacks. If module encrypted data **403** includes symmetric key **127**, then security token **401** could optionally be omitted since symmetric key **127** can also function as a security token **401**. Security token **401** is described in FIG. **5***a*. Timestamp **604***a* can represent a time value that module **101** sends message **208** or a time value that module **101** acquired sensor data **604***b*. Sensor data **604***b* is described with the description of a sensor **101***f* in FIG. **1***e*, and sensor data **604***b* can represents data module **101** acquires using sensor **101***f*. Sensor data **604***b* within message **208** may be stored by server **105** in a module database **105***k*, or potentially forwarded to another server (not shown) for additional processing. Sensor data **604***b* can comprise a wide range of values for a sensor **101***f* besides the exemplary value of a temperature reading shown in FIG. **6***a*, including raw sensor data, compressed sensor data, and processed or averaged sensor data. The specific sensor data **604***b* shown in FIG. **6***a* is illustrated to be exemplary and not limiting for sending and receiving sensor data. Sensor data **604***b* may also be referred to as a sensor measurement **604***b*.

Although not illustrated in FIG. **6***a*, body **602** or module encrypted data **403** may also include an (i) identity of monitored unit **119**, which may be associated with sensor data **604***b*, and/or (ii) a sensor identity **151** associated with sensor data **604***b*, such that data from potentially multiple sensors **101***f* could be properly identified and recorded. As one example, module **101** could collect sensor data for a plurality of monitored units **119**, and in this case message **208** would preferably include an identity of monitored unit **119** associated with the sensor data **604***b*. Or, a sensor **101***f* could have a sensor identity **151**, and message **208** could include the sensor identity **151** with the corresponding sensor data **604***b* (also illustrated in FIG. 7 of U.S. patent application Ser. No. 14/039,401). As described above, message **208** could also include a symmetric key **127**, as illustrated in FIG. 6 of U.S. patent application Ser. No. 14/039,401.

Note that if (A) module encrypted data **403** exceeds an acceptable length for input or output into asymmetric ciphering algorithms **141***a*, such as data within a module encrypted data **403** comprising an exemplary 3000 bits but only a 2048 bit key length is utilized in an exemplary module private key **112** processed with an RSA algorithm **153**, then (B) module encrypted data **403** within body **602** could comprise multiple separate sub-sections for module encrypted data **403**. In this case, each sub-section could comprise data less than the maximum acceptable length for encryption, and the sub-sections could be combined in order to form a module encrypted data **403** within body **602**.

FIG. **6***a* also illustrates exemplary details within response **209** sent by server **105**. Response **209** may comprise a TCP/UDP packet **601***b* sent from server **105** IP:port **207** the IP address **210** and port number **605**, where IP address **210** represents the external IP address of wireless network firewall **104** and port number **605** is the source port in message **208** as received by server **105** (i.e. the source port in message **208** after traversing the firewall **104** illustrated in FIG. **6***a*). Thus, IP:port with IP address **210** and port number **605** may be different than IP:port **204** in response **209**, since the presence of a wireless network firewall **104** may perform NAT routing, which could change the source IP address and source port number from IP:port **204** to IP address **210** and port number **605** in message **208**, as received by server **105**. The use of wireless network firewall **104** in wireless network **102** may require that response **209** be sent from IP:port **207** to IP address **210** and port number **605** in order to be properly processed by firewall **104** and forwarded to module **101** at IP:port **204**. Source IP:port **207** and destination IP address **210** and port number **605** in response **209** may be included within a header in TCP/UDP packet **601***b*. TCP/UDP packet **601***b* could comprise a regular UDP packet, a UDP Lite packet, or a TCP datagram, or similar protocols supported by an Internet **107**. TCP/UDP packet **601***a* and TCP/UDP packet **601***b* can preferably utilize the same protocol.

As noted previously, the use of checksums may be mandatory in IPv6 networks, and thus a response **209** comprising a packet **601***b* can include a checksum value **603** (illustrated in message **208** but not response **209**) for the header. The use of firewalls such as firewall **104** can change the header values in a packet **601***b*. In accordance with a preferred exemplary embodiment, a first checksum value **603** within a response **209** sent by server **105** can be different and/or not equal to a second checksum value **603** within the response **209** received by module **101**. Likewise, in an exemplary embodiment, a first checksum value **603** within a message **208** sent by a module **101** can be different and/or not equal to a second checksum value **603** within the message **208** received by server **105**.

A UDP, TCP, or UDP Lite datagram as a TCP/UDP packet **601***b* within response **209** may include a body **606**. Body **606** may comprise the payload or data within a UDP, TCP, or UDP Lite packet. Body **606** can include a server identity **206**, a server digital signature **506**, server encrypted data **504**, and channel coding **406**. Server identity **206** is illustrated in FIG. **6***a* as external to server encrypted data **504** within body **606**, but server identity **206** may optionally be included in server encrypted data **504** instead. Module **101** may communicate with a plurality of servers **105**, and server identity **206** as external to server encrypted data **504** can allow module **101** to select the appropriate symmetric key **127** to utilize for decrypting server encrypted data **504** (since each of the multiple servers **105** that module **101** communicates with may utilize a different symmetric key **127**).

Also note that the server identity **206** can be similar to module identity **110**, such that multiple different values for server identity **206** could be utilized in a system **100**, but each of the different values could preferably be uniquely associated with server **105**. As one example, server identity **206**, outside server encrypted data **504** as illustrated in FIG. **6***a*, may comprise a session identity or session identifier, as opposed to a different server identity **206** that could comprise a hardware serial number or domain name for server **105**. Thus, server identity **206** outside a server encrypted data **504** may be a different string or representation than server identity **206** within server encrypted data **504**, but both strings/numbers used for server identity **206** in response **209** could be associated with server **105**.

Server digital signature **506** in body **606** can comprise a secure hash signature of a subset of body **606**, where the subset of body **606** can comprise server encrypted data **504**, and/or server identity **206** as illustrated in FIG. **6***a*. In other words, processing the secure hash signature can omit (i) server digital signature **506** itself and (ii) channel coding **406** as input into the cryptographic algorithms **141** used to process or verify server digital signature **506**. In this manner, module **101** can utilize server digital signature **506** to authenticate that response **209** was sent by server **105**. Channel coding **406** in body **606** is also depicted and described in connection with FIG. **5***a* above.

Body **606** may include server encrypted data **504**. Server encrypted data **504** is depicted and described in connection with FIG. **5***a* above. Server encrypted data **504** may include an acknowledgement **501**, wherein acknowledgement **501** can notify module **101** that message **208** has been received by server **105**. As illustrated in FIG. **6***a*, server encrypted data **504** may optionally also include a module instruction **502** for module **101**. The module instruction **502** could be a string that contains instructions or configuration parameters for module **101**, such as an order to change state, parameters regarding the monitoring of monitored unit **119**, server names or addresses, radio frequency parameters, timer values, settings for actuator **101***y*, etc. A module instruction **502** is depicted and described in connection with FIG. **5***a* above. The exemplary module instruction **502** illustrated in FIG. **6***a* comprises a "key generation" **608** instruction for module **101** derive a new set of keys. The use of a "key generation" **608** instruction was also depicted and described in connection with FIG. **5***b* above. Other possibilities for a module instruction **502** within a response **209** are possible as well without departing from the scope of the present invention. Although not depicted in FIG. **6***a* or FIG. **2**, if response **209** includes a module instruction **502**, according to an exemplary embodiment, module **101** can preferably send a second message **208** to server **105**, where the second message **208** includes a confirmation that module instruction **502** was successfully executed or implemented by module **101**. This confirmation could be included in a server instruction **414** for server **105** within a second message **208**.

Also, although a server encrypted data **504** may preferably be included within a body **606**, body **606** may optionally omit server encrypted data **504** and include data from server **105** that is not encrypted, such as plaintext. As one example in this case, acknowledgement **501** could be included in body **606** as plaintext. In addition, although a server digital signature **506** is not illustrated in FIG. **6***a*, a server digital signature **506** could be included in body **606** and external to server encrypted data **504**. In an exemplary embodiment, the inclusion of a server digital signature **506** in a response **209** is illustrated in FIG. 6 of U.S. patent application Ser. No. 14/039,401. The server digital signature **506** may (i) optionally be omitted as well, or (ii) included within server encrypted data **504**.

Also, although not illustrated in FIG. **6***a*, server encrypted data **504** could include a symmetric key **127** for module **101** to utilize with symmetric ciphering **141***b* in cryptographic algorithms **141** for processing a module encrypted data **403** in subsequent messages **208** and/or responses **209**. If server encrypted data **504** includes a symmetric key **127**, then server **105** preferably can utilize an asymmetric ciphering **141***a* with cryptographic algorithms **141** to process the server encrypted data **504** containing the symmetric key **127**. An example for the previous sentence could be if message **208** was received without a symmetric key **127** and server **105** can issue the symmetric key **127**. As contemplated herein, more than one symmetric key **127** may be used concurrently in a system **100**, such as a first symmetric key **127** utilized in symmetric ciphering **141***b* for a message **208**, and a second symmetric key **127** utilized in symmetric ciphering **141***b* for a response **209**. Other possibilities exist as well without departing from the scope of the present invention.

Server encrypted data **504** in a response **209** may include a security token **401**. Security token **401** may be a random string and may also be generated by either server **105** or module **101**. If security token **401** is generated by module **101**, then security token **401** may be included in message **208** and also utilized by server **105** in response **209**, as illustrated in FIG. **6**. By including security token **401** in acknowledgement **501**, system **100** can be made robust to replay attacks since each response **209** can be reasonably unique for each response **209** sent by server **105**.

FIG. **6***b*

FIG. **6***b* is a simplified message flow diagram illustrating an exemplary message received by a server, wherein the message includes a derived module public key, in accordance with exemplary embodiments. As discussed in FIG. **5***b*, there can be cases where module **101** derives a new module public key **111** and new module private key **112**. On

example would be the initial creation of the key pairs by module **101**, and many other examples could exist as well. FIG. **6***b* can illustrate an exemplary format and contents of a message **208** for steps **516** and **517** of FIG. **5***b*. This exemplary message **208** can also help to illustrate the significant differences from conventional technology and improvements for efficient and secure communications by utilizing embodiments contemplated herein.

A message **208** illustrated in FIG. **6***b* using steps **516** and **517** can include (i) sending new module public key **111**, a module public key identity **111***a*, a module identity **110**, a server instruction **414**, and a set of parameters **126** associated with the new module public key **111** and/or cryptographic algorithms **141** for using the new module public key **111**. Exemplary parameters **126** illustrated in FIG. **11** include (i) a secure hash algorithm **141***c* to utilize in signatures, which could comprise the SHA 256 algorithm as shown (which may also be known as the SHA-2 algorithm), (ii) a selected elliptic curve for use with ECC algorithms **154** or a modulus to use with RSA algorithms **153**, and (iii) a time-to-live value for the public key, such as the illustrated "time to live" value of 1 year shown in FIG. **6***b*. The time value for the validity of new module public key **111** could alternatively be specified in a set expiration date. Other values associated with cryptographic algorithms **141** could be included in parameters **126** as well, and the illustrated values are intended to be exemplary instead of limiting. Other possibilities for data with a message **208** illustrated in FIG. **6***b* include a parameters **126** including a set of ECC parameters **126**, or a specified secure hash algorithm **141***c* comprising SHA-3 or SHA-512.

Additional values or fields within a message **208** associated with communicating a new module public key **111** with server **105** could include a server instruction **414** of "new public key". This server instruction **414** could inform server **105** to utilize the new module public key **111** within the message **208**. Module public key identity **111***a* can include a sequence number or identity for the new module public key **111**, such that module **101** or server **105** can properly reference and/or select the key from a plurality of module public keys **111** that could be associated with module identity **110**. Although module public key identity **111***a* is illustrated as a separate field in server instruction **414**, module public key sequence number **111***a* could optionally be included in parameters **126**, such that the value within parameters **126** specifies the current sequence number or module public key identity **111***a* for the new module public key **111** included in a message **208**.

Other fields and features within a message **208** as illustrated in a FIG. **11** can be similar to the fields presented in FIG. **6***a*. Since (a) FIG. **6***a* can also illustrate a first message **208** sent by a module **101** to a server **105**, such as after keys are derived in a step **515**, then (b) module **101** can read multiple values from RAM **101***e* or a nonvolatile memory **101***w* or **101***c* in order properly construct or format message **208**. Each of (i) destination IP:port number **207**, (ii) parameters **126**, and (iii) shared secret key **510** can preferably be written into nonvolatile memory at step **512** of FIG. **5***b*, if message **208** in FIG. **6***b* represents the first message **208** sent by module **101**. The source IP:port number **204** can represent a number assigned by an operating system **101***h*.

If message **208** in FIG. **6***b* comprises a subsequent time message **208** is received by server **105** (i.e. not a first time module **101** sends a module public key **111**), such as after step **521** illustrated in FIG. **5***b*, then each of (i) destination IP:port number, (ii) parameters **126**, and (iii) shared secret key **510** could be updated by server **105** using a module instruction **502** within a server encrypted data **504** before message **208** illustrated in FIG. **6***a* is received by server **105**. In this manner, shared secret key **510** could change from (i) comprising a pre-shared secret key **129***a* (for a first message **208** after module key derivation) to (ii) comprising a shared secret key that is sent by server **105** within a server encrypted data **504** (for a subsequent message **208** after module key derivation).

After receiving message **208**, server **105** can use the unencrypted module identity **110** illustrated in a body **602** of FIG. **6***b* to select the shared secret key **510** in order authenticate message **208**. As described in step **517** of FIG. **5***b*, server **105** may preferably authenticate message **208** that includes module public key **111** in order to confirm that module public key **111** originated from physical module **101** with a hardware module identity **110** (as opposed to being an imposter submitting the module public key **111**). The use of a channel coding **406** is described in connection with FIGS. **4** and **5***a*, and channel coding may optionally be omitted. If message **208** comprises a UDP Lite packet, then channel coding may optionally be applied within the body **602**. If message **208** comprises a UDP packet, then channel coding may comprise sending the exact same UDP packet **601***a* multiple times, such as an exemplary 3 packets **601***a* sent at the same time.

Although not illustrated in FIG. **6***b*, in an exemplary embodiment module public key **111** could also be received in a message **208**, where the module public key **111** and parameters **126** can be included in an encrypted format within a module encrypted data **403**. As depicted and described in connection with steps **1001** and **1002** of FIG. **10**, and also FIG. 11 of U.S. patent application Ser. No. 14/039,401, the security of a system **100** can be further increased by both (i) ciphering module public key **111** and parameters **126**, and (ii) only sharing the module public key **111** in a confidential manner with server **105**. If module **101** needed a module public key **111** for other purposes, such as obtaining a certificate, then a second, publicly disclosed module public key **111** could be utilized, where the second module public key **111** is different than a module public key **111** using parameters **126** that is sent to a server **105** in a module encrypted data **403**.

FIG. **6***b* also illustrates an exemplary embodiment, where module public key **111** can be authenticated with server **105** using a module digital signature **405**. If message **208** comprises a first time module **101** utilizes a step **516** and step **517**, such that a module public key **111** has not previously been sent to server **105**, then message **208** could include a module digital signature **405** using the shared secret key **510**, which could comprise the pre-shared secret key **129***a*. If message **208** comprises a subsequent time module **101** utilizes a step **516** and step **517**, such that a module public key **111** has previously been sent to server **105**, then message **208** could include a module digital signature **405** using the previous module private key **112** (i.e. not the new module private key associated with the new module public key **111** in the message **208** shown in FIG. **6***b*). As noted in FIG. **5***b*, module digital signature **405** could be omitted, and message **208** with module public key **111** could be authenticated using a message digest algorithm and the shared secret key **129***a*.

FIG. **7**

FIG. **7** is a simplified message flow diagram illustrating exemplary data transferred between a module and an application using a server, in accordance with exemplary embodiments. FIG. **7** includes a system **700** and illustrates an exemplary message **208** from a module **101** to a server **105**

and also an exemplary application message **701** between an application **171***i* and server **105**. Note that application message **701** could also be considered as transferred between, sent to, or received from server **105** and application server **171**. System **700** can comprise a module **101**, a server **105**, and an application **171***i* operating on an application server **171**, and these elements may communicate over a network such as the Internet **107**. For example, application server **171** may utilize an IP:port number **702** for sending and receiving messages with server **105**. The IP address within IP:port number **702** is illustrated as an IPv4 address, but an IPv6 address could be utilized as well, or other addressing schemes are possible. Message flows within a module **101** from a sensor **101***f* and to an actuator **101***y* are also included in a system **700** as illustrated in FIG. **7**. Message flows within a module **101** could utilize a system bus **101***d*.

Although not illustrated in FIG. **7**, before module **101** sends a module public key **111** to server **105**, possibly by using step **516** as illustrated in FIG. **7**, module **101** can derive the public and private keys using step **515** and a set of parameters **126**. Alternatively, module **101** may have the module public key **111** and module private key **112** generated outside module **101** and loaded into a non-volatile memory **101***w*. Server **105** can utilize step **516** to receive a module public key **111** from module **101**. Server **105** can utilize a step **517** and a shared secret key **510** to authenticate a message **208** that contains the module public key **111** from step **516**. Authentication of module public key **111** may be preferred in order to ensure that the module public key **111** is properly associated with the correct physical module **101**, and prevent an imposter, hacker, etc. from sending in a fake module public key **111** for module **101**. After using step **517** to authenticate module public key **111**, server **105** can record module public key **111** and associated module identity **110** (plus optionally a module public key identity **110***a*) in a module database **105***k*. Although not illustrated in FIG. **7**, server **105** can also send an application message **701** to application **171***i* after successfully recording module public key **111**.

Application **171***i* operating within an application server **171** can send an application message **701** to server **105**, and server **105** can receive the application message **701**. Application message **701** could include a module instruction **502**, where the module instruction **502** could comprise an actuator setting **706**. Although not illustrated in FIG. **7**, module instruction **502** as transmitted or sent by application **171***i* or application server **171** could include a module identity **110** and/or an actuator identity **152**. Actuator setting **706** could include a setting value and an actuator identity **152**. As one exemplary embodiment, module **101** may have a plurality of actuators **101***y* that comprise thermostats. Actuator setting **706**, where one actuator **101***y* had an actuator identity **152** of "Left", could comprise an exemplary string like "Left, 25.5", where module **101** would set the "left" thermostat/actuator **101***y* to 25.5 degrees C. The value "left" could also comprise the actuator identity **152**. Other possibilities exist as well without departing from the scope of the present invention, and a thermostat, temperature settings, or actuator identities are not required to use the methods and systems contemplated herein. As discussed below in connection with FIG. **8**, actuator setting **706** within an application message **701** could be received within a secure connection data transfer **802** from application server **171**. Thus, in an exemplary embodiment, the actuator setting **706** may preferably not be plaintext as transmitted across a network such as the Internet **107** between server **105** and application server **171** in an application message **701**.

A module instruction **502** (*i*) from an application **171***i* or application server **171**, and (ii) within an application message **701** could include other exemplary values or instructions for a module **101**, besides the exemplary actuator setting. According to exemplary embodiments, a module instruction **502** could comprise information for module **101** such as (i) sleep timers or instructions or values for a CPU wake controller **101***u*, (ii) server address **106** or server identity **206** for communicating with a server **105** (such as sending a different server address **106** for module **101** to utilize in future communications), (iii) a new or updated values for set of data reporting steps **101***x*, (iv) a new or updated module program **101***i*, (v) software or firmware for operating system **101***h* and device driver **101***g*, (vi) a calibration value for sensor **101***f* or actuator **101***y*, (vii) values for a set of parameters **126**, (viii) software or settings for radio **101***z*, (ix) updated cryptographic algorithms **141**, (x) a new module private key **112**, (xi) a symmetric key **127**, (xii) a pre-shared secret key value **129***a* for use in communicating with a wireless network **102** (where the pre-shared secret key value **129***a* can be the equivalent of a Ki value in a network supporting ETSI/3GPP standards), (xii) a value for a module identity **101**, (xiii) a value to use in a channel coding **406**, or (xiv) a security token **401** or settings for using security tokens. Other possibilities exist as well for a module instruction **502** without departing from the scope of the present invention. After receiving module instruction **502** in a response **209** from server **105**, module **101** could record the data in module instruction **502** within a nonvolatile memory **101***w* or RAM **101***e*.

After receiving application message **701**, server **105** can wait for wait interval **703**. As depicted and described in connection with FIGS. **2** and **6***a*, firewall **104** may be present in a system **700** and/or system **100**, which could block the transmission or sending of packets from server **105** to module **101** at arbitrary times. In addition, according to exemplary preferred embodiments, module **101** can enter periods of sleep or dormancy using a CPU wake controller **101***u* in order to conserve energy or the life of a battery **101***k*, if present. During periods of sleep or dormancy, module **101** may not be able to receive packets from server **105**. Consequently, server **105** can preferably wait for the wait interval **703** as illustrated in FIG. **7**, before sending response **209** which could include the module instruction **502**. As illustrated in FIG. **7**, the module instruction **502** could include an actuator setting **706**, but module instruction **502** could include other data as well such as the exemplary module instructions **502** described in the previous paragraph.

According to exemplary embodiments, wait interval **703** can vary depending upon module **101** and monitored unit **119**, and wait interval **703** could comprise a wide range of values. Module **101** could send a sensor data **604***b* or a report or a message **208** at exemplary reporting intervals such as every minute, 10 minutes, hour, 6 hours, daily, or longer. Wait interval **703** could be associated with the reporting interval, and the wait interval **703** would end when the next message **208** from module **101** is received. If server **105** supports a plurality of modules **101**, wait interval **703** can be associated with the specific module **101** associated with the module instruction **502**, possibly by using a module identity **110** in both a message **208** and an application message **701**. In other words, server **105** can preferably wait for a message **208** from the specific module **101** associated with the module instruction **502** before sending the response **209** which could include the module instruction **502**. Response

209 could be sent using the source and destination IP:port numbers depicted and described in connection with FIG. 2.

Upon the receipt of message 208 from module 101 with module identity 110, the wait interval 703 can end. As illustrated in FIG. 7, message 208 could include a server instruction 414. The server instruction 414 in the exemplary embodiment illustrated in FIG. 7 comprises an "update" server instruction 414, and could include a sensor measurement 604*b*. Sensor measurement 604*b* could be obtained by module 101 from sensor 101*f* before sending message 208, and possibly after module 101 wakes from a dormant state using a CPU wake controller 101*u*. Sensor measurement 604*b* could be collected by a module program 101*i* using a system bus 101*d*. As illustrated in FIG. 6*a*, a server instruction 414 with sensor data 604*b* could be within a module encrypted data 403 and received by server 105. Server 105 could utilize the steps illustrated in FIG. 4 to process the received message 208 at the end of wait interval 703. Sensor measurement 604*b* as used by module program 101*i*, server 105, application 171*i*, and/or application server 171 could represent a different string or number at each element, depending upon encoding rules or encoding schemes utilized by each element, but sensor measurement 604*b* at each location can represent data or a value collected by a sensor 101*f*.

After processing the received message 208 that could include sensor data 604*b*, server 105 can send application 171*i* operating on application server 171 an application message 701 that includes an update instruction 704, where update instruction 704 could include sensor data 604*b*, module identity 110, and sensor identity 151, if present. Update instruction 704 could include data other than sensor data 604, such as data pertaining to the state of module 101, including subcomponents illustrated in FIGS. 1*b* and 1*e*. Using update instruction 704 or a plurality of update instructions 704, application 171*i* can aggregate data to generate reports for presentation to user 183 or make decisions using service controller 171*x*. Based on data input in update instruction 704, application 171*i* could output module instruction 502 in an application message 701. Application 171*i* could record data received in update instruction 704 within an application database 171*k*.

After receiving message 208 with server instruction 414, server 105 can send a response 209 to module 101. Note that response 209 is illustrated in FIG. 7 as being sent after sending update instruction 704 to application server 171, but response 209 could also be sent to module 101 before sending update instruction 704 to application server 171. Response 209 can include module instruction 502, where module instruction 502 could comprise actuator setting 706, according to an exemplary embodiment. Module instruction 502 could also comprise other data for module 101 in other exemplary embodiments, as outlined above. Although not illustrated in FIG. 7, response 209 could include module instruction 502 within a server encrypted data 503 using the steps depicted and described in connection with FIG. 5*a*. Module instruction 502 could also include actuator identity 152 associated with actuator setting 706. Response 209 can be formatted as depicted and described in FIGS. 2 and 6*a*, such that response 209 can traverse a firewall 104 and be received by module 101 using IP address 204. Network firewall 104 is illustrated as a dashed line in FIG. 7, and may be optionally not be present. But, the use of network firewall 104 may be included in a system 100 and/or system 700 and network firewall 104 may be beyond the control of a module 101, server 105, module provider 109, M2M service provider 108, etc.

After receiving response 209 with the module instruction 502 and actuator setting 706, module 101 can process the response 209, which could also include server encrypted data 503. Module 101 could extract actuator setting 706 from the module instruction 502. Module instruction 502 could include an actuator identity 152. Module 101 can use a module program 101*i* to send the actuator setting 706 to the actuator 101*y* with actuator identity 152. Actuator setting 706 as sent by module program 101*i* may be in a different format or data structure than actuator setting 706 as sent by application 171*i*, but both sets of data can achieve the same objective of having an actuator 101*y* apply a setting. According to one exemplary embodiment, actuator setting 706 as sent by module program 101*i* could be an analog voltage along a system bus 101*d*, while actuator setting 706 as sent by application 171*i* could be a string or number. Or, actuator setting 706 as sent by module program 101*i* to actuator 101*y* could be a number in a different format than a number in actuator setting 706 sent by application 171*i*, application server 171, and/or server 105. Note that as contemplated herein, the term "actuator data" can include or comprise "actuator setting".

After applying actuator setting 706, actuator 101*y* can send an acknowledgement to module program 101*i*. Module program 101*i* can then send a second message 208 to server 105, where message 208 includes a server instruction 414 of "confirmation". The server instruction 414 of "confirmation" could be included in a module encrypted data 403 according to a preferred exemplary embodiment. Server 105 can receive the second message 208 with the module encrypted data 403 and decrypt the module encrypted data 403 using a step 413 to extract the server instruction 414 of "confirmation". The second message 208 may include the actuator identity 152 and/or also the module identity 110. Server 105 can send an application message 701 that includes a confirmation 705, where the confirmation can (i) inform application 171*i* that the actuator setting 706 sent to server 105 has been properly and/or successfully applied by module 101 and/or actuator 101*y*. Confirmation 705 could also include module identity 110 and/or actuator identity 152. Application 171*i* could then send an acknowledgement back to server 105 after receiving the confirmation 705.

According to preferred exemplary embodiments, actuator identity 152 is preferably globally unique, such that that including an actuator identity 152 in any packet would allow a server 105 or application 171*i* to lookup a module identity 110 and/or module 101 using the actuator identity 152 and a database such as module database 105*k*. Similarly, a sensor identity 151 may be globally unique, according to preferred exemplary embodiments such that a sensor identity 151 in any packet would allow a server 105 or application 171*i* to lookup a module identity 110 and/or module 101 using the sensor identity 151 and a database such as application database 171*k*.

FIG. 8

FIG. 8 is a simplified message flow diagram illustrating exemplary data transferred between a module and an application using a server, in accordance with exemplary embodiments. System 800 can include an application server 171, a server 105, and a module 101 in connected via a network. The network could comprise the Internet 107. Application server 171 could include an application 171*i*, where application 171*i* can include logic, algorithms, databases, user interfaces, and programs for managing a plurality of modules 101 with a plurality of users 183. Application server 171 and application 171*i* may be associated with an M2M service provider 108, and M2M service provider 108 could

use application **171***i* to provide and manage a service with distributed modules **101** associated with a plurality of monitored units **119**.

Module **101** can derive a public key **111** and a private key **112** using step **515**. Module **101** can derive the public and private keys using step **515** and a set of parameters **126**. Alternatively, module **101** may have the module public key **111** and module private key **112** generated outside module **101** and loaded into a non-volatile memory **101***w*. Server **105** can utilize step **516** to receive a module public key **111** from module **101**. Server **105** can utilize a step **517** to authenticate a message **208** that contains the module public key **111** in step **516**. Authentication of module public key **111** may be preferred in order to ensure that the module public key **111** is properly associated with the correct physical module **101** with a module identity **110**, and prevent an imposter, hacker, etc. from sending in a fake module public key **111** for module **101**. After using step **517** to authenticate module public key **111**, server **105** can record module public key **111** in a module database **105***k*. Although not illustrated in FIG. **8**, server **105** can also send an application message **701** to application **171***i* after successfully recording an authenticated module public key **111**. Although not illustrated in FIG. **8**, a module public key **111** received in step **516** may also include a module public key identity **111***a* in order to track which of a plurality of potential module public keys **111** for a module **101** may be used.

Also, server **105** is not required to receive module public key **111** from module **101** in order to utilize the methods and systems contemplated herein. Instead of receiving module public key **111** in a message **208** from module **101**, server **105** could alternatively query another server such as application server **171** or a server associated with certificate authority **118** for either module public key **112** or a certificate **122** associated with module **101** using a module identity **110**. In addition, server **105** could have a list or database table of module identities **110** and module public keys **111** loaded into a module database **105***k*.

After recording module public key **111** and module identity **110**, possibly including a module public key identity **111***a*, server **105** can wait for wait interval **703**. Wait interval **703** could represent the time between reports or messages **208** submitted by module **101**, and wait interval **703** for an individual module **101** could comprise a wide range of values from several times a second to several days or longer, depending upon the application and/or monitored unit **119**. The wait interval **703** can end when server **105** receives a message **208** from module **101** with a module identity **110**.

Module controller **105***x* within server **105** can receive a message **208** that includes a server instruction **414** with sensor data **604***b*. The sensor data **604***b* and/or server instruction **414** could be included in a module encrypted data **403**, where the module encrypted data **403** can use the module public key **111** submitted in step **516** above and derived by module **101** in step **515**. According to one exemplary embodiment, module encrypted data **403** could be ciphered with a symmetric key **127** that is derived shared key **129***b* from a key derivation function **141***f* and module public key **111** received in step **516** (and also server public key **114**). Module controller **105***x* can process message **208** using the steps depicted and described in connection with FIG. **4** in order to decrypt the module encrypted data **403** and obtain the plaintext server instruction **414** and plaintext sensor data **604***b*. Although sensor data **604***b* is illustrated as the server instruction **414** in FIG. **8**, server instruction **414** could have other values such data associated with any of the components for module **101** illustrated in FIG. **1***b* and FIG. **1***e*. Server instruction **414** could be a "query" where module **101** queries for information from server **105** or application **171***i*, or server instruction **414** could be an alarm or error notification outside a regular reporting interval. Other possibilities for server instruction **414** exist without departing from the scope of the present invention. Server instruction **414** could also be a periodic "registration" message with no subsystem data for module **101**, and a "registration" could be a message for server **105** indicating module **101** is awake and online with Internet **107**.

Server **105** can establish a secure connection with application server **171** and application **171***i* using a secure connection setup **801** and a secure connection data transfer **802**. Server **105** can utilize a server program **101***i* to manage the communication with application **171***i* and/or application server **171**, while a module controller **105***x* can manage communication with a module **101**. Alternatively, server program **101***i* and module controller **105***x* can be optionally combined or omitted, such that server **105** performs the actions illustrated in FIG. **8** for server programs **101***i* and module controller **105***x*. Likewise, server **105** and application **171** could be combined or operate on the same local area network (LAN) and thus not be connected via the Internet **107**. If server **105** and application **171** are nodes within the same LAN or virtual private network (VPN), then the network connection can also be considered a secure connection (without using encryption between the nodes), since packets routed between the nodes may not need to traverse the Internet **107** and thus the network layer could provide security. Although secure connection setup **801** is illustrated in FIG. **8** as occurring after message **208** is received by server **105**, secure connection setup **801** could take place before message **208** is received by server **105**. Secure connection setup **801** could utilize a secure protocol such as TLS, IPSec, or VPN to establish a secure connection between server **105** and application **171***i* and/or application server **171**, such that data transferred between the two nodes is encrypted and also not subject to replay attacks. As contemplated herein, a secure connection can comprise any of a TLS connection, an IPSec connection, a VPN connection, or a LAN connection between server **105** and application server **171** and/or application **171***i*, and other possibilities exist as well without departing from the scope of the present invention.

Other secure connections may be utilized as well, including a secure shell (SSH) tunnel, future versions of standard secure connections, or also a proprietary protocol for a secure connection. Secure connection setup **801** as illustrated in FIG. **8** may utilize a TLS protocol, such as TLS version 1.2. Secure connection setup **801** can include the transfer of a certificate **122** for application server **171**, and also the transfer of an application public key **171***w*. Server **105** can utilize application public key **171***w* to encrypt data received from module **101** in a message **208**, such as sensor data **604***b*. According to one exemplary embodiment, application message **701** could be ciphered with a symmetric key **127** that comprises a derived shared key **129***b* from (i) a key derivation function **141***f* (ii) application public key **171***w* and server public key **114**.

The message flow in a secure connection setup **801** also illustrates one benefit of the present invention, where a message **208** can be securely transferred between module **101** and server **105** using a single UDP datagram, while secure connection setup **801** may require a plurality of TCP messages in both directions. In other words, using a secure connection setup **801** between module **101** and server **105**

may not be energy efficient for module **101**, while using secure connection setup **801** between server **105** and application server **171** can be efficient, since the data from a plurality of modules **101** can be shared over the secure connection setup **801**. Also note that since module **101** may sleep for relatively long periods such as 30 minutes or longer, a new secure connection setup **801** would likely be required to support a firewall **104** after each period of sleep, and completing the process of a secure connection setup **801** each time module **101** wakes may not be energy or bandwidth efficient for a module **101**.

After completing server connection setup **801**, server **105** can use a secure connection data transfer **802** to send a first application message **701**, where the first application message **701** could include update instruction **704** that includes sensor data **604***b* that server **105** received in a message **208**. Data within the first application message **701** containing update instruction **704** could be ciphered according to the specifications of the secure connection, such as TLS or IPSec, and other possibilities exist as well. Note that server **105** can decrypt a module encrypted data **403** that includes sensor data **604***b* and subsequently encrypt the sensor data **604***b* according to the format required by secure connection setup **801** for transfer to application **171***i* using secure connection data transfer **802**. Server **105** can use two different server public keys **114**, recorded in the form of a certificate **122** in one embodiment, to with a first server public key **114** used decrypt module encrypted data **403** and a second server public key **114** used encrypt update instruction **704**. Server public keys **114** can be used by server **105** in a key derivation function **141***f* to derive a shared public keys **129***b* used in a symmetric ciphering algorithm **141***b* for both secure connection data transfer **802** and module encrypted data **403** (with a different derived shared public key **129***b* with module **101** and application server **171**, respectively).

In another embodiment, server **105** can use the same server public key **114** to both decrypt module encrypted data **403** and encrypt update instruction **704**. Other possibilities exist as well for server **105** to use a server public key **114** to (i) encrypt update instruction **704**, such as using an asymmetric ciphering algorithm **141***a*, and (ii) decrypt module encrypted data **403** without departing from the scope of the present invention. As illustrated in FIG. **8**, server **105** can receive an acknowledgement **804** after sending the first application message **701**, with update instruction **704** that includes sensor data **604***b*, where acknowledgement **804** can signal that application message **701** with update instruction **704** has been received by application **171***i* and/or application server **171**. Although not illustrated in FIG. **8**, the acknowledgement **804** could optionally include a module instruction **502** for module **101**.

After receiving message **208**, server **105** can then send a response **209**. Response **209** could be sent before or after server **105** sends update instruction **704** to application **171***i* using secure connection data transfer **802**. Response **209** can include a server encrypted data **504** that includes a module instruction **502**. Module instruction **502** could be processed by server **105**, or could be obtained by server **105** from application **171***i* in an application instruction **701**. In other words, a secure connection data transfer **802** may be utilized by a server **105** and an application server **171** to send a second application message **701** to server **105**, and be received by server **105**, in addition to the sending the first application message **701** from server **105** to application server **171** that is illustrated in FIG. **8**.

According to an exemplary preferred embodiment, server **105** waits for a response or acknowledgement **804** from application **171***i* to application message **701** before sending response **209** to module **101**. One reason for waiting for a response or acknowledgement **804** from application **171***i* is that response or acknowledgement **804** from application **171***i* could include a module instruction **502**, and the module instruction **502** may preferably be included in a response **209**. Other possibilities exist as well without departing from the scope of the present invention.

FIG. **8** can also illustrate a benefit of an exemplary embodiment contemplated herein. According to an exemplary embodiment, (i) server **105** and application server **171** can utilize a first set of cryptographic algorithms **141** for sending and receiving data between server **105** and application server **171**, such as with a secure connection data transfer **802**, and (ii) server **105** and module **101** can utilize a second set of cryptographic algorithms **141** for sending and receiving data between server **105** and module **101**, such as using the second set of cryptographic algorithms **141** for a module encrypted data **403** and/or server encrypted data **504**. In an exemplary embodiment, server **105** and application server **171** can use RSA algorithms **153** in the first set of cryptographic algorithms **141**, while server **105** and module **101** can use ECC algorithms **154** in the second set of cryptographic algorithms **141**. As one example, server **105** can use an (i) RSA-based asymmetric ciphering algorithm **141***b* and first server public key **114** with the application server **171** to securely transfer a first symmetric key **127** with application server **171**, and (ii) an ECC-based asymmetric ciphering algorithm **141***b* and second server public key **114** with the module **101** to securely transfer a second symmetric key **127** with a module **101**.

Other possibilities exist as well for a server **105** to use a different cryptographic algorithms **141** or parameters **126** for each of application server **171** and module **101**. (A) Server **105** and application server **171** could use a first set of parameters **126** for use with cryptographic algorithms **141** for an application message **701** with related server digital signatures, while (B) server **105** and module **101** could use a second set of parameters **126** for use with cryptographic algorithms **141** for a module encrypted data **403** and/or server encrypted data **504** and related digital signatures. In order to maximize security between servers such as server **105** and application server **171**, the first set of parameters **126** could specify (i) a longer public and private key length, (ii) a shorter key expiration time **133**, (iii) a longer secure hash algorithm (such as an exemplary 512 bits), (iv) a longer symmetric ciphering key **127** length (such as an exemplary 192 or 256 bits), (v) the use of or values for RSA algorithm **153** and a modulus, (vi) the use of Diffie Hellman key exchange or a first key exchange algorithm for a key derivation function **141***f* and key exchange, (vii) the use of or values for a second symmetric ciphering algorithm **141***b* for symmetric ciphering, (viii) the use of or values for an RSA digital signature algorithm or a second digital signature algorithm, and similar settings.

In accordance with a preferred exemplary embodiment, in order to minimize processing power and/or energy usage required for a module **101**, the second set of parameters **126** could specify (i) a shorter public and private key length, (ii) a longer key expiration time **133**, (iii) a shorter secure hash algorithm (such as an exemplary 256 bits), (iv) a shorter symmetric ciphering key **127** length (such as an exemplary 128 bits), and (v) the use of an ECC algorithm **154**, (vi) the use of or values for an ECC standard curve **138** and/or ECC parameters **137**, (vii) the use of or values for ECDH **159** or

a second key exchange algorithm for key derivation and exchange, (vii) the use of or values for of a second symmetric ciphering algorithm **141***b* for symmetric ciphering, (viii) the use of or values for of ECDSA **158** or a second digital signature algorithm for digital signatures, and similar settings. In an embodiment, the first set of parameters **126** (which can be used by server **105** and application server **171**) and the second set of parameters **126** (which can be used by server **105** and module **101**) can both specify the use of elliptic curve cryptographic algorithms **141**, but with different sets of parameters **126** such that the first set of parameters **126** is selected for server to server communications, and the second set of parameters **126** is selected for communications between a server **105** and a module **101**. In another embodiment, the first set of parameters **126** and the second set of parameters **126** can both specify the use of RSA based cryptographic algorithms **141**, but with different sets of parameters **126** such that the first set of parameters **126** is selected for server to server communications, and the second set of parameters **126** is selected for communications between a server **105** and a module **101**.

In this manner, the use of cryptographic algorithms **141** between (i) server **105** and application server **171** and (ii) server **105** and module **101** can be optimized given different constraints for processing power and energy consumption for server **105**, application server **171**, and a module **101**. In addition, an application server **171** may use cryptographic algorithms **141** and parameters **126** that may not be compatible with cryptographic algorithms **141** and parameters **126** used by a module **101**, and server **105** can use cryptographic algorithms **141** and parameters **126** to enable a translation or conversion of encrypted data and digital signatures between a module **101** and an application server **171**, thereby establishing connectivity between a module **101** and an application server **171** through a server **105**. According to an exemplary embodiment, server **105** can function as a gateway between application server **171** and/or application **171***i* and a plurality of modules **101**.

FIG. **9**

FIG. **9** is a simplified message flow diagram illustrating exemplary data transferred between (i) a server and an application and between (ii) a server and a module, in accordance with exemplary embodiments. An application server **171**, a server **105**, and a module **101** can send and receive data illustrated in FIG. **9**. Application server **171** can include application **171***i* and use an Internet Protocol address and port (IP:port) number **903** for sending and receiving data with server **105**. Server **105** can include a server program **101***i* and a module controller **105***x*, where server program **101***i* can access a first server IP:port number **901** for communicating with application server **171**, and module controller **105***x* can access a second server IP:port number **207** for communication with module **101**. In accordance with a preferred exemplary embodiment, multiple modules **101** can send data to server IP:port number **207**, and thus server **105** and/or a module controller **105***x* can use a single IP:port number **207** to communicate with a plurality of modules **101**. In addition, server **105** could specify that one subset of modules **101** communicate with a first IP:port number **207**, and a second subset of modules **101** communicate with a second IP:port number **207**, etc. In another embodiment, server **105** could use multiple Internet Protocol addresses for sending and receiving data with a module **101**, although a given module **101** can preferably send a message **208** to IP:port number **207** and receive a response **209** from the IP:port number **207**, and a different module **101** could use a different value for IP:port number **207**, including potentially a different IP address **106**. Module **101** can utilize an IP:port number **204** for sending and receiving data with server **105**.

As illustrated in FIG. **9**, a symmetric firewall **104** could be included between module **101** and server **105**, and the of IP addresses and port numbers in packets between server **105** and module **101** illustrated in FIG. **9** could also represent routing if a firewall **104** is present and functions as a symmetric firewall without NAT routing. In this case, firewall **104** may not perform network address translation on source and destination IP addresses, but rather filter packets based on pre-determined rules. For example, a firewall **104** that is a symmetric firewall could drop inbound packets from IP:port number **207** to module **101** unless module **101** had previously sent a packet to IP:port number **207** within a firewall port binding timeout value **117**. Alternatively, a firewall **104** may be optionally omitted, and in this case the destination address in packets sent from server **105** to module **101** could include the IP address **202** of module **101**, which is also the case illustrated in FIG. **9**. In other words, FIG. **9** illustrates an exemplary routing of packets in the cases that (i) firewall **104** is a symmetric firewall, and (ii) firewall **104** is optionally not present.

Server **105** can receive a message **208** from a module **101**. Server **105** can use a module controller **105***x* to receive the message, and module controller **105***x* could also be identified as a process operating on server **105** that binds to the port number in IP:port **207**, which could include a port number **205**. Message **208** could include module identity string **904**, which could represent a temporary or transient string or number used by module **101** and server **105** to associate and identify message **208** with module identity **110**. Module identity string **904** could also comprise a module identity **110**. Server **105** can use module identity string **904** to select a symmetric key **127** in order to decrypt module encrypted data **403**, since module identity string **904** may preferably be not encrypted. Server **105** and module **101** could use an algorithm within cryptographic algorithms **141** in order to process a module identity string **904**, whereby the module identity string **904** can be converted between (i) a module identity **110** in a form such as a serial number or IMEI within module **101** and/or server **102**, and (ii) a module identity string **904** in a message **208** that can traverse the Internet **107**.

Message **208** as received by server **105** can also include a server instruction **414** within a module encrypted data **403**, where the module encrypted data **403** could be ciphered using a symmetric key **127**. The server instruction **414** illustrated in FIG. **9** can be an exemplary "update" instruction, where the "update" instruction can include a security token **401** and sensor data **604***b*. Sensor data **604***b* can include a sensor identity **151** and a sensor measurement. Server instruction **414** within a message **208** could include many other values besides an update, including a registration, a query, an alarm or error notification, configuration request, software request, confirmation, or other values also depicted and described in connection with a server instruction **414** in FIG. **4**. Although message **208** is illustrated as a UDP datagram **601***a* in FIG. **9**, message **208** could also be transmitted as a TCP datagram or other Internet transport protocols including Datagram Congestion Control Protocol (DCCP) and Stream Control Transmission Protocol (SCTP). A security token **401** can comprise a random number **128***a* processed by a random number generator **128** and can be preferably not reused and therefore can keep message **208** unique and not subject to replay attacks. Since a UDP protocol may be implemented for message **208**, and the

connectionless UDP protocol may require a module **101** to send retransmissions of a UDP datagram **601***a* for message **208**, if module **101** does not receive a response **209** within a specified timer period.

According to an exemplary preferred embodiment, server **105** can include a timer **905**, such that multiple UDP datagrams **601***a* received within the timer **905** period may be processed, but datagrams received outside the expiration of the timer **905** would be dropped. Note timer **905** can be particularly useful for security of a system **100** when module **101** may transmit multiple copies of UDP datagram **601***a*. Module **101** may transmit multiple copies of a UDP datagram **601***a* in order to implement forward error correction and compensate for any packet loss on the Internet **107** or possibly with wireless network **102**. The UDP datagram **601***a* may also be sent as a UDP Lite datagram with channel coding **406**. Server **105** can start timer **905** when the first UDP datagram **601***a* in message **208** is received, and discard UDP datagrams **601***a* for message **208** after the timer **905** expires, such as after an exemplary 2 seconds although other possibilities exist as well. In this manner (i) module **101** can securely send multiple copies of the same UDP datagram **601***a* in message **208**, and (ii) server **105** can remain robust against replay attacks. Server **105** can also reset the timer **905** to a zero value upon sending response **209**, and the timer value **905** could start again upon the receipt of a first UPD datagram **601***a* in the next message **208**.

If the UDP Lite protocol is utilized for message **208** with multiple copies of UDP Lite datagram **601***a* received, then each UDP Lite datagram **601***a* could be different, depending on the presence of bit errors in the datagram, and thus server **105** can use timer **905** to collect the multiple copies of UDP Lite datagram **601***a* within the timer **905** period and process the multiple packets received, including combining the data across multiple packets, in order to eliminate bit errors within the datagrams and collect an error-free message **208**.

After receiving message **208**, server **105** use the steps outlined in FIG. **5***a* to process message **208** and read the plaintext server instruction **414**, such as the sensor data **604***b* illustrated in FIG. **9**. Other possibilities exist as well for sensor data **604***b* or values or information inside a server instruction **414**. Server **105** can then send or transmit a first application message **701** to application server **171** that includes data received from the server instruction **414** from module **101** in message **208**. The data received in the server instruction **414** from module **101** could be included by server **105** in an update instruction **704**. An application **171***i* operating within application server **171** or associated with application server **171** could receive the first application message **701**. The first application message **701** could be formatted according to a TCP datagram **902**, although other possibilities exist as well including UDP.

In accordance with an exemplary preferred embodiment, the first application message **701** may include an update instruction **704** with sensor data **604***b*, although update instruction **704** could also contain or include other data pertaining to module **101** besides sensor data **604***b*, such as a state of a component with module **101**, a state of a software routine, variable, or parameter associated with module **101**. The first application message **701** sent from server **105** to application server **171** could be a datagram within a secure connection data transfer **802** as illustrated in FIG. **8**. Sensor data **604***b* could be sent by server **105** using application server public key **171***w*, such as either (i) mutually deriving a common shared key **129***b* between server **105** and application **171***i* using a key derivation function **141***f*, where the shared key **129***b* could function as a symmetric key **127** with a symmetric ciphering algorithm **141***b*, or (ii) server **105** sending a symmetric key **127** to application server **171** using an asymmetric ciphering algorithm **141***a* and the application server public key **171***w*. Message **805** in FIG. **8** with the label of "Client Key Exchange" can comprise server **105** sending a symmetric key **127** (or value or parameter **126** for deriving symmetric key **127**) to application server **171**, where the symmetric key **127** can be used by server **105** to encrypt update instruction **704** illustrated in FIG. **9**.

In accordance with an exemplary preferred embodiment, application message **701** may include (i) module identity **110** encrypted within secure connection data transfer **802** and also a server identity **206** that is not encrypted. In this manner, application server **171** can use server identity **206** to select a symmetric key **127** (possibly sent in message **805** as described in the paragraph above) in order to decrypt the encrypted data in update instruction **704**. Although not illustrated in FIG. **9**, in accordance with another exemplary embodiment, both a message **208** and the first application message **701** may also include a module digital signature **405**. Server **105** can forward the module digital signature **405** received in a message **208** with sensor data **604***b* to the application server **171** in the first application message **701** illustrated in FIG. **9**. The module digital signature **405** in a first application message **701** does not need to be encrypted. The application server **171** can verify the module digital signature **405** using step **411** of FIG. **4** (using a module public key **111**). In this manner, application **171** can verify that module **101** originated the sensor data **604***b*, even though application server **171** received the application message **701** from server **105**.

Application server **171** can receive the first application message **701** sent by server **105** and process the message. The message processing by application server **171** could use steps similar or equivalent to the steps utilized by server **105** illustrated in FIG. **4**, in order to extract a plaintext application instruction **704**. Although not illustrated in FIG. **9**, application **171***i* could record data received within application instruction **704** and record the data in an application database **171***k*. Application **171***i* could use the data received in application instruction **704** or a plurality of application instructions **704** to generate reports, graphs, emails, or other user information for a user **183**.

Upon processing the information within application instruction **704**, application **171***i* or application server **171** could send a second application message **701** to server **105**, as illustrated in FIG. **9**. The second application message **701** could be sent using a secure connection data transfer **802**, and could include a module instruction **502** and a module identity **110**. The second application message **701** can use the IP:port number **903** as a source IP:port number for the second application message **701**, where IP:port number **903** also represented a destination IP:port number for the first application message **701**. The second application message **701** can use the IP:port number **901** as the destination IP:port number, where IP:port number **901** was the source port number in the first application message **701**. The module instruction **502** within the second application message **701** can comprise could include an actuator setting **706**. The module instruction **502** within the second application message **701** can comprise other data or module instructions **502** for a module **101** that do not include an actuator setting **706**, such as the exemplary data depicted and described in connection with FIG. **5***a*.

Either server **105** or application server **171** could use the application server public key **171***w* to process the second application message **701**. As one example, server **105** and/or

application server **171** could use a key derivation function **141***f* to derive a key, where key derivation function **141***f* used application server public key **171***w*. The derived key could be used to encrypt and/or decrypt the module instruction **502** in the second application message **701**. Other possibilities exists as well for the second application message **701** to use the application server public key **171***w*, such as server **105** sending a symmetric key **127** (used to encrypt and/or decrypt module instruction **502** in the second application message **701**), where they symmetric key **127** was ciphered using the application server public key **171***w*.

Server **105** can received the second application message **701**, and the message could be received using an IP:port number **901**. Although an IPv4 address is shown in FIG. **9**, and IPv6 address could be utilized as well. Server **105** could decrypt a body **602**, that contains module identity **110** and a module instruction **502**, using algorithms specified according to a secure connection data transfer **802**. According to an exemplary embodiment, a secure connection data transfer **802** between a server **105** and an application server **171** could also comprise the steps for encrypting/decrypting and signing/verifying that are depicted and described in connection with FIG. **4** and FIG. **5***a*, and thus secure connection data transfer **802** could also optionally use the same steps and procedures between server **105** and application server **171** that are contemplated between server **105** and module **101**. As one example, the application message **701** packets illustrated in FIG. **9** sent between server **105** and application **171** could be formatted to UDP and include a server encrypted data **504**. As depicted and described in FIG. **8**, a first set of parameters with cryptographic algorithms **141** could be used with an application message **701** and a second set of parameters **126** with cryptographic algorithms **141** could be used with server encrypted data **504** and/or module encrypted data **403**.

After extracting a plaintext module instruction **502** and module identity **110** from a body **602** in the second application message **701**, server **105** can take steps to process the data within a response **209** for module **101**. Server **105** can record or query for information pertaining to module **101** using module identity **110** in a module database **105***k*. In accordance with exemplary embodiments, server **105** can use module identity **110** received in the second application message **701** to select (i) a symmetric key **127** used by module **101** for encrypting and/or decrypting a server encrypted data **504** that can include the module instruction **502**, (ii) a destination IP:port number **204** for sending a response **209**, (iii) a source IP:port number **207** for sending a response **209**, (iv) a determination if a wait interval **703** is required before sending response **209**, (v) a security token **401**, and (vi) a set of parameters **126** for use with a cryptographic algorithms **141** in communications with module **101**. In one embodiment, different modules **101** connected to server **105** may use different parameters **126**, and server **105** can select the parameters **126** using (i) the module identity **110** received in the second application message and (ii) a module database **105***k*. Server **105** can also use module identity **110** received in the second application message **701** to select (vii) a transport protocol for a response **209**, such as TCP, UDP, or UDP Light, and (viii) a channel coding **406** parameter such as a block code, turbo code, or forward error correction coding scheme. Server **105** can use module identity **110** received in application message **701** to format and/or send a response **209** to module **101**.

According to a preferred exemplary embodiment, server **105** may receive an application message **701** with data for a module **101** at arbitrary times. Server **105** could also receive an application message **701** at a time when a first application message **701** with module identity **110** has not (i) previously been sent by server **105**, (ii) or sent in a comparably long time such as a day or a week. As noted previously, server **105** may not be able to send a module instruction **502** to module **101** at arbitrary times, because of either (i) a sleep or dormant period for module **101**, and/or (ii) the presence of a firewall **104**. Thus, server **105** may need to (i) receive a message **208** from module **101** (such as upon waking after a sleep period after a firewall port binding timeout value **117** period since the last message **208**) before (ii) sending a module instruction **502**. Consequently, according to a preferred exemplary embodiment, server **105** can use module identity **110** received within an application message **701** to determine (i) if server **105** should wait until a wait interval **703** expires before sending response **209** (where the wait interval **703** can end upon receipt of a message **208** from a module **101** with the module identity **110** received in the application message **701**) or (ii) if server **105** can send response **209** right away (such as a firewall port binding timeout period **117** has not expired), where response **209** includes the module instruction **502** received in the application message **701**.

After (A) using module identity **110** received within application message **701** to select values within a response **209** and timing for sending a response **209**, then (B) server **105** can send response **209** as illustrated in FIG. **9**, where the specific response **209** in FIG. **9** is exemplary. Response **209** can include a server encrypted data **504**. Server encrypted data **504** can include module instruction **502**. The exemplary response **209** illustrated in FIG. **9** includes an actuator setting **706** within module instruction **502**, but other possibilities exist as well. Note that the use of server encrypted data **504** is optional within a response **209**, and server **105** could send module instruction **502** as plaintext. However, in this case of module instruction **502** being sent as plaintext, server **105** can preferably include a server digital signature **506** such that module **101** can verify the server digital signature **506** using the server public key **114** and confirm the module instruction **502** was transmitted by server **105**. In accordance with exemplary preferred embodiments, (i) a message from module **101** to server **105** that does not include a module encrypted data **403** preferably includes a module digital signature **405**, and (ii) a response **209**, message sent back, datagram, or packet from server **105** to module **101** that does not include a server encrypted data **504** preferably includes a server digital signature **506**. If data is not encrypted within a packet and the packet includes plaintext instructions such as a module instruction **502** or a server instruction **414**, then, in accordance with preferred exemplary embodiments, the receiving node can preferably verify the identity of a sender using a digital signature included in the packet.

Response **209** sent from server **105** to module **101** could include a checksum **603**. Since firewall **104** may comprise a symmetric firewall **104** (that may not perform network address translation routing), the destination address within IP:port **204** in response **209** illustrated in FIG. **9** may match the IP address **202** used by module **101**. In this case, where the destination IP:port in response **209** includes IP address **202**, a checksum **603** sent by server **105** can be equal to a checksum **603** received by module **101**. In accordance with exemplary embodiments, response **209** is transmitted or sent by server **105** within a firewall port binding timeout value **117** after message **208** was received by server **105**. In other words, if a firewall port binding timeout value **117** was equal to an exemplary 20 seconds for UDP packets, the response

209 illustrated in FIG. 9 would preferably be sent in less than 20 seconds after receiving the last message 208.

FIG. 10

FIG. 10 is a flow chart illustrating exemplary steps for a server to receive a module instruction within an application message, and for the server to send the module instruction to a module, in accordance with exemplary embodiments. Since an application 171*i* operating with an application server 171 may utilize a different set of protocols for communications than a module 101, server 105 can provide connectivity between module 101 and application 171*i*. As illustrated in FIG. 8 and FIG. 9 above, a server 105 can receive an application message 701 from an application server 171. The application server 171 and/or application 171*i* could be identified by the source IP address in an application message 701 received by server 105. Application message 701 could include encrypted data using a secure connection data transfer 802, where a body 602 within a packet could include a module instruction 502 and a module identity 110. As illustrated in system 199 in FIG. 1*i*, server 105 can support a network with a plurality of modules 101, and thus a module identity 110 within an application message 701 can be useful to (i) select the proper destination of module instruction 502, and (ii) other values for sending a response 209 to module 101 as depicted and described in connection with FIG. 9 above.

At step 1001, server 105 can preferably utilize the protocol for the secure connection data transfer 802 (such as TLS illustrated in FIG. 8) to extract the plaintext module instruction 502 and module identity 110. Server 105 could use a first symmetric key 127 with application server 171, such as (i) a first symmetric key 127 derived or transmitted with message 805 and (ii) a symmetric ciphering algorithm 141*b*. After extracting plaintext from application message 701, server 105 can record the data in a module database 105*k*, or simply store the data for further processing in a memory 101*e*. Although not depicted in FIG. 10, server 105 could use a message pre-processor 105*y* to send and receive data with application server 171, where the message pre-processor could comprise a program or library such as a TLS library, and IPSec library, an SSH library, etc.

Server 105 can then wait for a wait interval 703, where server 105 waits for an incoming message from module 101. Server 105 may need to wait for the wait interval 703 because the module may sleep or be dormant, and also a firewall 104 may block inbound packets or datagrams from server 105 to module 101 if module 101 had not previously sent a packet within a firewall port binding timeout value 117. After the wait interval 703, server 105 can use step 503 to encrypt module instruction 502 using a second symmetric key 127 and a security token 401, where the second symmetric key 127 is different than the first symmetric key 127. As illustrated in FIG. 5*a*, the output of step 503 can be a server encrypted data 504. Although step 503 is illustrated as after wait interval 703 in FIG. 10, step 503 could also take place either (i) before wait interval 503 or (ii) concurrently with wait interval 703.

According to exemplary embodiments, a first symmetric key 127 used by server 105 and application server 171 is different than a second symmetric key 127 used by module 101 and server 105. In addition, according to an exemplary embodiment, server 105 may use an RSA algorithm 153 for asymmetric ciphering 141*a* in packets with application server 171 and an ECC algorithm 154 for asymmetric ciphering 141*a* in packets with a module 101. Thus, according to an exemplary preferred embodiment, server 105 can utilize (i) a first certificate 122 with an RSA-based server public key 114 for use in communication with application server 171*i* and (ii) a second certificate 122 with an ECC-based server public key 114 for use in communication with a module 101. In an exemplary embodiment, the first symmetric key 127 is associated with a first symmetric ciphering algorithm 141*b* between server 105 and application server 171, and the second symmetric key 127 is associated with a second symmetric ciphering algorithm 141*b* between server 105 and module 101, and the first and second symmetric ciphering algorithms 141*b* are different. As depicted and described in connection with FIG. 8, the first and second symmetric ciphering algorithms 141*b* may use different parameters 126, such as a first set of parameters 126 with the first symmetric ciphering algorithms 141*b* and a second set of parameters 126 with the second symmetric ciphering algorithms 141*b*.

Server 105 can receive a message 208 from module 101, where the module identity 110 or module identity string 904 in message 208 could represent a number or string associated with the module identity 110 in application message 701. Note that the exact string, number, or digits in module identity 110 or module identity string 904 in message 208 does not need to match the exact string, number, or digits for module identity 110 in application message 701, and the two messages could use different encoding schemes or values for module identity 110. As one example, module identity 110 in application message 701 could represent a serial number for module 101, while module identity 110 in message 208 could represent a session identity. Other possibilities exist as well for a string or number within a module identity 110. Server 105 can preferably uniquely associate module identity 110 in an application message 701 with module identity 110 in a message 208.

After receiving message 208, server 105 can send the server encrypted data 504 processed in step 503 above within a response 209. A server encrypted data 504 within response 209 could include the module instruction 502, where module instruction 502 was received in the application message 701. Note that module instruction 502 within response 209 does not need to be the exact same string, number, or binary digits as module instruction 502 received by server 105 in application message 701. As one example, application message 701 and response 209 could use different coding schemes (such as ASN.1 for response 209, and plaintext for application message 701, although other possibilities exist as well). As illustrated in FIG. 10, module instruction 502 within an application message 701 can preferably represent an equivalent action for module 101 as a module instruction 502 within response 209. For example, module instruction 502 in both application message 701 and response 209 could instruct module 101 to (i) throw a switch, (ii) sleep for an interval, (iii) adjust a power level, and other possibilities exist as well. As described above in FIG. 9, the use of encryption within response 209 could optionally be omitted, but in this case response 209 may include a server digital signature 506 with module instruction 502.

After sending response 209, at step 1002 the server 105 may preferably receive a confirmation from module 101 that the module instruction 502 had been successfully received and/or successfully applied. The confirmation could be received in the format of a second message 208 from module 101 with a server instruction 414, where the server instruction 414 is a "confirmation". Other data regarding the execution of module instruction 502 by module 101 could be included in the confirmation at step 1002, such as a timestamp 604*a* when the module instruction 502 was executed.

After receiving the confirmation from the module **101**, server **105** can preferably send a second application message **701** to an application server **171** and/or application **171***i* with a confirmation **705**. The confirmation **705** could be sent using a secure connection data transfer **802**. In accordance with exemplary embodiments, the application message **701** sent from server **105** to application server **171** in the form of a confirmation **705** can include the timestamp **604***a*.

In an exemplary embodiment, the reliable and secure transmission of timestamp **604***a* from module **101** to application server **171** through server **105** may be useful for proper management of a monitored unit **119**. Due to any sleep or dormant states of module **101**, plus periodic outages and recovery of wireless network **102**, a first time value that module **101** executes module instruction **502** may be significantly different than a second time value that application server **171** sent the module instruction **502**. Consequently, application server **171** may preferably receive a timestamp **604***a* sent by module **101** in an application message **701** from server **105**, and the application message **701** could comprise a confirmation **705**.

Although not illustrated in FIG. **10**, server **105** could then continue listening on or monitoring (i) IP:port **901** for additional incoming application messages **901** from application server **171**, and (ii) IP:port **207** for additional incoming messages **208** from a module **101**. Although not illustrated in FIG. **10**, module instruction **502** may optionally be encrypted such that server **105** may not be able to read plaintext within module instruction **502**, and in this case step **1001** illustrated in FIG. **10** would be bypassed. For example, module instruction **502** may be encrypted with the module public key **111**, and thus module instruction **502** may only reasonably be read by module **101**. Even if module instruction **502** cannot be read in plaintext form by server **105** upon receiving application message **701**, module identity **110** within application message **701** would preferably be in a form where server **105** can (i) process the module identity **110** into plaintext (as a minimum in order to route the message to module **101** among a plurality of modules **101**), or (ii) simply read the module identity **110** from a body **602** in the application message **701**.

In this embodiment where step **1001** is omitted in FIG. **10**, the application server **171** can use a module public key **111** and an asymmetric ciphering algorithm **141***a* to encrypt the module instruction **502** shown in the body **602** of the application message **701** illustrated in FIG. **9**. The application server **171** can also include a digital signature of the module instruction **502** using the application server private key **171***t* and a digital signature algorithms **141***d*. The encrypted module instruction **502**, module identity **110**, and digital signature can be sent to the server **105** in an application message **701** using the first step shown in FIG. **10**. The application message **701** can also include an identity of the application server.

Continuing in this embodiment where step **1001** is omitted in FIG. **10**, the server **105** can then use the waiting interval **703** until a message **208** is received from a module **101**. In this case where step **1001** is omitted in FIG. **10**, then step **503** can also be omitted since the module instruction **502** is already encrypted with the module public key **111** (by the application server **171**). After skipping step **503** and receiving the message **208**, the server **105** can then send the encrypted module instruction **502** and digital signature (signed by the application server **171**) to the module **101** in a response **209**, as shown in FIG. **10**. The module **101** can read receive the response **209**, read the identity of the application server, select a public key **171***w* of the application server **171**, verify the digital signature of the module instruction **502**, and decrypt the module instruction **502** using the module private key **112** and an asymmetric ciphering algorithms **141***a*. The module **101** can then apply the module instruction **502** and send a message **208** with a confirmation at step **1002**. The confirmation at step **1002** can include a timestamp **604***b*, which the server **105** can send to the application server **171**. In this manner, the module **101** may receive instructions from the application server **171***i* that are not encrypted by the server **105**.

FIG. **11**

FIG. **11** is a flow chart illustrating exemplary steps for a server to communicate with an application and a module, in accordance with exemplary embodiments. FIG. **11** includes a combination of different exemplary embodiments contemplated in the present invention, including (i) receiving a first module encrypted data **403** with a first sensor data **604***b* from a module **101** using a first public key **111**, (ii) sending the first sensor data **604***b* in a first application message **701**, (iii) sending a module instruction **502** for a module **101** to derive a new public and private key pair using a set of parameters **126**, (iv) receiving a second module encrypted data **403** with a second sensor data **604***b* from module **101** using the second public key, and (iv) sending the second sensor data **604***b* in a second application message **701**.

Server **105** can receive a first module public key **111** at step **516**. The first module public key **111** can be in a message **208** that includes a module identity **110** and first parameters **126**, where the parameters can provide values associated with the first module public key **111** such as an elliptic curve name or defining equation, a modulus for an RSA key, a time-to-live value, a certificate authority **118** name, etc. According to an exemplary embodiment, a set of parameters **126** can include a module public key identity **111***a*, in addition to other values. Server **105** can receive the first module public key **111** at step **516** in the form of a certificate **122**, although a certificate **122** is not required. Although not illustrated in FIG. **11**, module public key **111** could optionally be encrypted in a module encrypted data **403**, as depicted and described in connection with Step **1001** of FIG. 10 in U.S. patent application Ser. No. 14/039,401. In addition, the submission of the first module public key **111** at step **516** could be authenticated using step **517** of FIG. **5***b* of the present invention. In this manner, server **105** can ensure that the first module public key **111** is properly associated with module identity **110** and/or module **101** (i.e. prevent an incorrect submission of the first module public key **111** or even the potential malicious submission of the first module public key **111**). In accordance with a preferred exemplary embodiment, the first message **208** received at step **516** can also include a module public key identity **111***a*, so that server **105** can properly keep track of multiple different module public keys **111** used by a module **101** over time, such as module **101** periodically rotating public/private key pairs in order to enhance security.

At step **1101**, server **105** can receive a second message **208** that includes a first module encrypted data **403**, where the first module encrypted data **403** was processed by server **105** using the first module public key **111** and first set of parameters **126** received in step **516**. In accordance with an exemplary preferred embodiment, server **105** can use the first module public key **111** to process the first module encrypted data **403** by (i) mutually deriving a common shared secret key **129***b* as a symmetric key **127** for use between server **105** and module **101** using a key derivation function **141***f* with the first module public key **111** as an input into the key derivation function **141***f*, and (ii) server

105 sending a symmetric key 127 to module 101 where (ii.a) the symmetric key 127 was ciphered using an asymmetric ciphering algorithm 141*a* and the first module public key 111 and (ii.b) the first module encrypted data 403 was ciphered using the symmetric key 127. Note that the second message 208 could be optionally sent without ciphering or encryption, and in this case the second message 208 could use the first module public key 111 to include a module digital signature 405 in the second message 208. The second message 208 can include a sensor data 604*b* or other server instruction 414. According to an exemplary embodiment, the second message 208 may also preferably include a module identity 110 or a module identity string 904 outside of the module encrypted data 403, so that server 105 can select the proper key in order to decrypt the module encrypted data 403.

At step 1102, server 105 can use an application message 701 to send the sensor data 604*b* from a sensor 101*f* with module 101 to an application server 171 and/or an application 171*i*. As illustrated in FIG. 8 and FIG. 9, the application message 701 can use a secure connection data transfer 802, and could comprise an update instruction 704. The application message 701 can include both a module identity 101 and a server identity 206, and the server identity 206 can be useful for application server 171 since the application server 171 could receive a plurality of application messages 701 from a plurality of servers 105, each using a different key for ciphering. Although not illustrated in FIG. 11, steps 1101 and 1102 could be completed in series multiple times before proceeding to step 1103, such as module 101 sending multiple messages 208 with sensor data 604*b* over several days or longer, and server 105 can correspondingly send the data to an application server 171.

At step 1103, server 105 can process a module instruction 502 for module 101 to derive a second module public key 111 and a second private key 112. Potential reasons for the use of a new public and private key by module 101 are described in connection with FIG. 5*b* and elsewhere herein, and could include the expiration the validity of a certificate 122 with the first module public key 111 among many possible reasons. Although server 105 is illustrated as processing the module instruction 502 at steps 1103, an application server 171 or another server associated with M2M service provider 108 or module provider 109 could send a signal to server 105 for module 101 to derive new keys, and server 105 could then send module 101 a module instruction 502 to derive new keys at step 1103. In an exemplary embodiment, any module instructions 502 originated outside server 105 in a system 100 illustrated in FIG. 1 may preferably be sent to server 105 before sending to module 101, since other servers besides server 105 in a system 100 illustrated in FIG. 1 would not normally be able to send a packet to module 101 due to the presence of firewall 104. In accordance with an exemplary preferred embodiment, (i) module 101 may only receive a module instruction 502 from a server 105, where server 105 had previously received a message 208, (ii) before module 101 receives the module instruction 502. Further, module 101 may only receive a module instruction 502 both (i) after sending a message 208 and (ii) before the expiration of a firewall port binding timeout value 117 after sending the message 208.

Server 105 can then use step 503 illustrated in FIG. 5*a* to encrypt (i) the module instruction 502 and (ii) the second parameters 126 in a server encrypted data 504, where the module instruction 502 comprises an instruction for module 101 to derive a new pair of keys. Server 105 can use a symmetric key 127 and a symmetric ciphering algorithm 141*b* to encrypt the module instruction 502 and second parameters 126. The symmetric key 127 used in step 503 illustrated in FIG. 11 could be processed using the first module public key 111, where server 105 had (i) verified the identity of module 101 using a module digital signature 405 using the first module public key 111, and then (ii) subsequently sent or received the symmetric key 127 with module 101 after the module digital signature 405 was verified using the first module public key 111. Alternatively, server 105 could have sent the symmetric key 127 to module 101 in a response 209 using an asymmetric ciphering algorithm 141*a* and the first module public key 111. Although not illustrated in FIG. 11, in a different but related embodiment to FIG. 11, step 506 can be substituted for step 503, such that module instruction 502 and/or second parameters 126 are not encrypted but rather a server digital signature 506 processed for inclusion in a response at step 1104 below.

At step 1104, server 105 can then send a response 209 that includes the module instruction 502 and second parameters 126, where the module instruction 502 could be included in a server encrypted data 504. The response 209 could be formatted according to the exemplary response 209 illustrated in FIG. 6*a*, where the response 209 can include a module instruction 502 for the module 101 to derive a new key pair. The response 209 could be to (i) the second message 208 received at step 1101, or (ii) a subsequent message 208 received by server 105 after the second message 208 received in step 1101 and not shown in FIG. 11. The response 209 at step 1104 can also include a second set of parameters 126 and a security token 401. As contemplated herein, the terms "parameters" and "set of parameters" may be considered equivalent. If response 209 at step 1104 does not include a server encrypted data 504, then response 209 at step 1104 may preferably include a server digital signature 506.

The second set of parameters 126 at step 1104 could be related to the first set of parameters 126 at step 516 illustrated in FIG. 11, or may be different. As one example, a second set of parameters 126 could include a different expiration date or time-to-live value for a new module public key 111. The second set of parameters 126 could include a new elliptic curve name or values for a defining equation, including a new elliptic curve for a cryptographic algorithms 141 to be utilized by module 101. Thus, according to a preferred exemplary embodiment, a set of parameters 126 sent to a module in a response 209 can include values for an elliptic curve defining equation. In this manner, module 101 and server 105 can utilize an elliptic curve for an ECC algorithms 154 that is different than an ECC standard curve 138. For example, module 101 and server 105 may prefer to use an elliptic curve for ECC algorithms 154 that is different than defined curves in standards such the list of curve names in section 5.1.1 of IETF RFC 4492 entitled "Elliptic Curve Cryptography (ECC) Cipher Suites for Transport Layer Security (TLS)", and other related curves such as defined curves published by NIST.

One benefit of utilizing a non-standard elliptic curve (where the curve can be defined using a ECC parameters 137 in a parameters 126) is that security can be increased, since attempts to break encryption with standard elliptic curves could not be readily applied to non-standard elliptic curves used in an ECC algorithm 154 (i.e. rainbow tables and the like generated for one elliptic curve would not normally be applicable for a sufficiently different elliptic curve). In accordance with a preferred exemplary embodiment, at step 1104 the second set of parameters 126, which can include values for a defining equation and/or ECC parameters 137,

can be sent to a module **101** in a response **209**, where the parameters **126** are within a server encrypted data **504**. The security of a system **100** can be increased by keeping confidential the elliptic curve used in an ECC algorithm **154**. By sending ECC parameters **137** (possibly within the second set of parameters **126**) in a server encrypted data **504** in a response **209**, where ECC parameters **137** include values for a different elliptic curve for module **101** to utilize in a cryptographic algorithms, the security of a system **100** can be further increased since the underlying elliptic curves used with public and private keys can change over time.

Module **101** can receive the response **209** sent in step **1104** with the module instruction **502** instructing module **101** to derive a new key pair using the second set of parameters **126**. Note the second set of parameters **126** could be omitted in the response **209** sent in step **1104** and in this case module **101** can use the first set of parameters from step **516** illustrated in FIG. **11**. Module **101** can decrypt the server encrypted data **504** in a response **209** using a symmetric key **127** and/or the first module public key **111** sent in the first message at step **516** shown in FIG. **11**. At step **515**, module **101** can derive the new key pair using the second set of parameters **126**. As depicted and described in connection with FIG. **5***b*, module **101** can use the second set of parameters **126**, cryptographic algorithms **141**, a key pair generation algorithms **141***e*, and a random number generator **128** to derive a second module public key **111** and a second module private key **112**. The random number generator **128** could use input from a sensor **101***f*, radio **101***z*, and other hardware in order to input "noisy" data into a seed **129** used by random number generator **128**, including using a module random seed file **139**.

At step **1105**, server **105** can receive the second module public key **111** from module **101** in a third message **208**. The third message **208** could include a module identity **110**, and the second module public key **112** could be authenticated by server **105** using step **517** depicted and described in connection with FIG. **5***b* above. Note that the third message **208** may also preferably include a module public key identity **111***a*, so that server **105** can properly track and identify which of a plurality of module public keys **111** may be used. Module public key identity **111***a* and module public key **111** could be received by server **105** in the form of a certificate **122**, although the use of a certificate **122** is not required. Server **105** can authenticate the second module public key **111** at step **1105** using the first module public key **111** received in step **516** in FIG. **11**. In one embodiment, the second module public key **111** could be authenticated by server **105**, where the third message included a module digital signature **405** that module **101** processed using the first module private key **112**. Server **105** could use the first module public key **111** and the first set of parameters **126** received in (or used with) step **516** of FIG. **11** to verify the module digital signature **405**. In this manner, the second module public key **111** could be authenticated with or after step **1105** by server **105**.

Upon receiving and authenticating the second module public key **111**, server **105** can record the second module public key **111** in a module database **105***k* or store the key in other memory. After recording the second module public key **111**, at step **1106** server **105** can receive a fourth message **208** that includes (i) a module identity, and (ii) a second module encrypted data **403**, where the second module encrypted data **403** may be encrypted using the second module public key **111** received at step **1105**. The second module encrypted data **403** could include second sensor data **604***b* or other data as well. Server **105** can decrypt the second module encrypted data **403** in order to extract the plaintext sensor data **604***b*, or other data for a server **105** or application **171***i*, including a server instruction **414** different than an "update" message.

At step **1107**, server **105** can then send a second application message **701** to an application server **171** and/or application **171***i*, were the second application message could include the sensor data **604** received in step **1105** and the module identity **110**. Server **105** can utilize a secure connection data transfer **802** to send the sensor data **604***b* and the module identity **110** received in step **1106**. In an exemplary embodiment, the keys used for a secure connection data transfer **802** at step **1107** could be the same as used in the secure connection data transfer **802** at step **1102**. In this manner, server **105** can support a change in public and private keys for module **101**, while no change in public and private keys are required for application server **171** and/or application **171***i*. Further, application **171***i* may require a valid certificate **122** for server **105**, while server **105** may not require a certificate **122** for each module **101**. Although not illustrated in FIG. **11**, steps **1106** and **1107** could repeat in sequence as server **105** continues to receive additional messages **208** from module **101** overtime, and server **105** could continue to update application server **171** and/or application **171***i* by sending additional application messages **701**. Application **171***i* can use the plurality of sensor data **604***b* received in FIG. **11** to update an application database **171***k* and information presented to a user **183** though a web portal **171***j*.

CONCLUSION

Various exemplary embodiments have been described above. Those skilled in the art will understand, however, that changes and modifications may be made to those examples without departing from the scope of the claims.

What is claimed is:

1. A method comprising:

(1) storing a server public key, a module identity, cryptographic algorithms, and a pre-shared secret key, wherein the module identity comprises a permanent identifier for a mobile device and the cryptographic algorithms includes a symmetric ciphering algorithm;

(2) deriving a module private key and a corresponding module public key associated with the mobile device using the cryptographic algorithms;

(3) deriving a symmetric ciphering key using (i) an elliptic curve integrated encryption scheme with the server public key and the module private key and (ii) an American National Standards Institute standard X-9.63 key derivation function;

(4) generating module encrypted data using the symmetric ciphering key and the symmetric ciphering algorithm, wherein the module encrypted data includes the module identity;

(5) sending a message to a server for a wireless network, the message comprising the module encrypted data and the corresponding module public key, wherein the server mutually derives the symmetric ciphering key using at least the module public key, and wherein the wireless network selects the pre-shared secret key for the mobile device using the module identity; and

(6) authenticating the mobile device with the wireless network using a message digest with the pre-shared secret key.

2. The method of claim 1, wherein the message further comprises a module identity string, the module identity string comprising a temporary identification for the mobile device.

3. The method of claim 1, wherein the pre-shared secret key comprises a key K, wherein the mobile device and the wireless network mutually derive a response from (i) a random value and (ii) the key K, and wherein the mobile device receives the random value from the wireless network.

4. The method of claim 1, wherein, in step (1), the pre-shared secret key is stored within a subscriber identity module card, the pre-shared secret key comprising a key K.

5. The method of claim 1, wherein, in step (1), the pre-shared secret key is stored before the mobile device communicates with the wireless network.

6. The method of claim 1, further comprising, in step (1), storing parameters for the cryptographic algorithms, the parameters comprising a standard curve for elliptic curve cryptography, and wherein, in step (2), the module public key and the module private key are derived using the standard curve.

7. The method of claim 6, wherein, in step (5), the message further comprises the parameters for the cryptographic algorithms, and wherein the server mutually derives the symmetric ciphering key using at least the module public key and the parameters for the cryptographic algorithms.

8. The method of claim 1, wherein the mobile device receives the pre-shared secret key via a wireless 802.11 connection to a web portal after a user for the mobile device submits a pre-shared secret key code for the mobile device to the web portal.

9. The method of claim 1, further comprising, in step (2), deriving (i) the module private key from a random number generator and (ii) the module public key from a key pair generation algorithm, wherein the module private key comprises a random number.

10. The method of claim 9, wherein the random number generator is configured to generate the random number from a seed value, and wherein the seed value comprises data from at least one of a sensor and a radio for the mobile device.

11. The method of claim 1, wherein, in step (1), the server public key is stored in a nonvolatile memory of the mobile device.

12. The method of claim 1, wherein the server comprises a plurality of computers, wherein the plurality of computers includes at least one sub-server and at least one database.

13. The method of claim 1, wherein the server comprises at least one virtualized server operating on at least one computer.

14. The method of claim 1, wherein the wireless network includes the server.

15. The method of claim 1, wherein, in step (1), the module identity is stored in a read-only nonvolatile memory address, wherein the mobile device designates the read-only nonvolatile memory address as read-only for a time interval.

16. The method of claim 1, wherein the wireless network comprises at least one base station communicating with a 3GPP wireless technology.

17. The method of claim 1, wherein the message comprises a single user datagram protocol packet.

18. The method of claim 1, wherein the symmetric ciphering algorithm comprises an Advanced Encryption Standard algorithm and has a length of 128 bits.

19. The method of claim 1, wherein the module identity comprises a number for an international mobile subscriber identity number.

20. The method of claim 1, wherein the mobile device comprises a smartphone.

* * * * *