US 20140219443A1

(19) United States

(12) Patent Application Publication

Brainis et al.

(10) Pub. No.: US 2014/0219443 A1

(43) Pub. Date: Aug. 7, 2014

(54) GENERATION OF CRYPTOGRAPHIC KEYS

(75) Inventors: **Edouard Brainis**, Brussels (BE); **Juilen Niset**, Brussels (BE); **Louis-Philippe Lamoureux**, Brussels (BE)

(73) Assignee: **UNIVERSITE LIBRE DE BRUXELLES**, Brussels (BE)

(21) Appl. No.: **14/127,016**

(22) PCT Filed: **Jun. 15, 2012**

(86) PCT No.: **PCT/EP2012/061508**

§ 371 (c)(1), (2), (4) Date: **Apr. 16, 2014**

(30) **Foreign Application Priority Data**

Jun. 17, 2011 (GB) 1110290.2

Publication Classification

(51) **Int. Cl.**
H04L 9/08 (2006.01)

(52) **U.S. Cl.**
CPC ***H04L 9/0816*** (2013.01); *H04L 2209/24* (2013.01)
USPC **380/46**

(57) **ABSTRACT**

A method is provided of generating and distributing secret random data. The method requires a plurality of participating parties each to own an identical private-key generation device and to request a random signal over a shared publication communication network. At each iteration of the method, the parties process the public random signal with the internal states of their secret-key generation devices using two functions, the output of the first function being generated secret random data and the output of the second function being a new internal state.

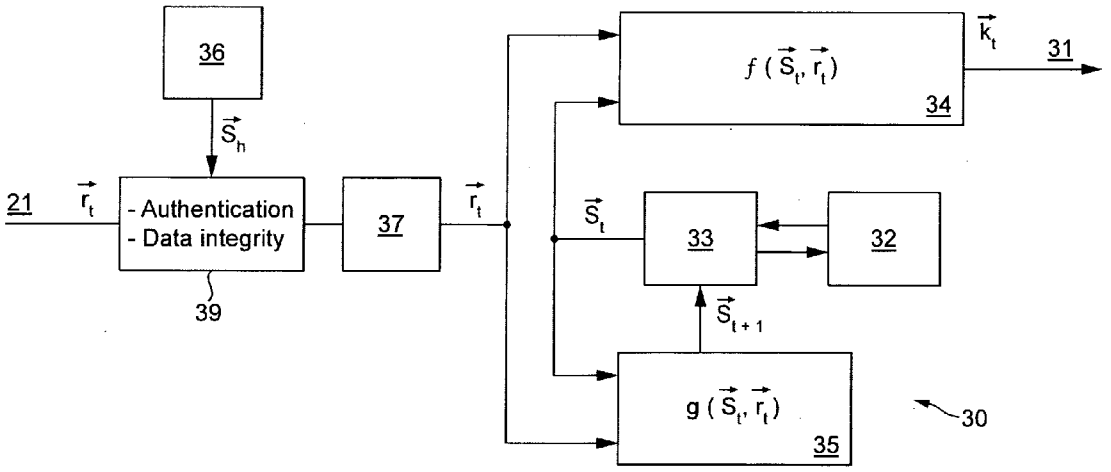

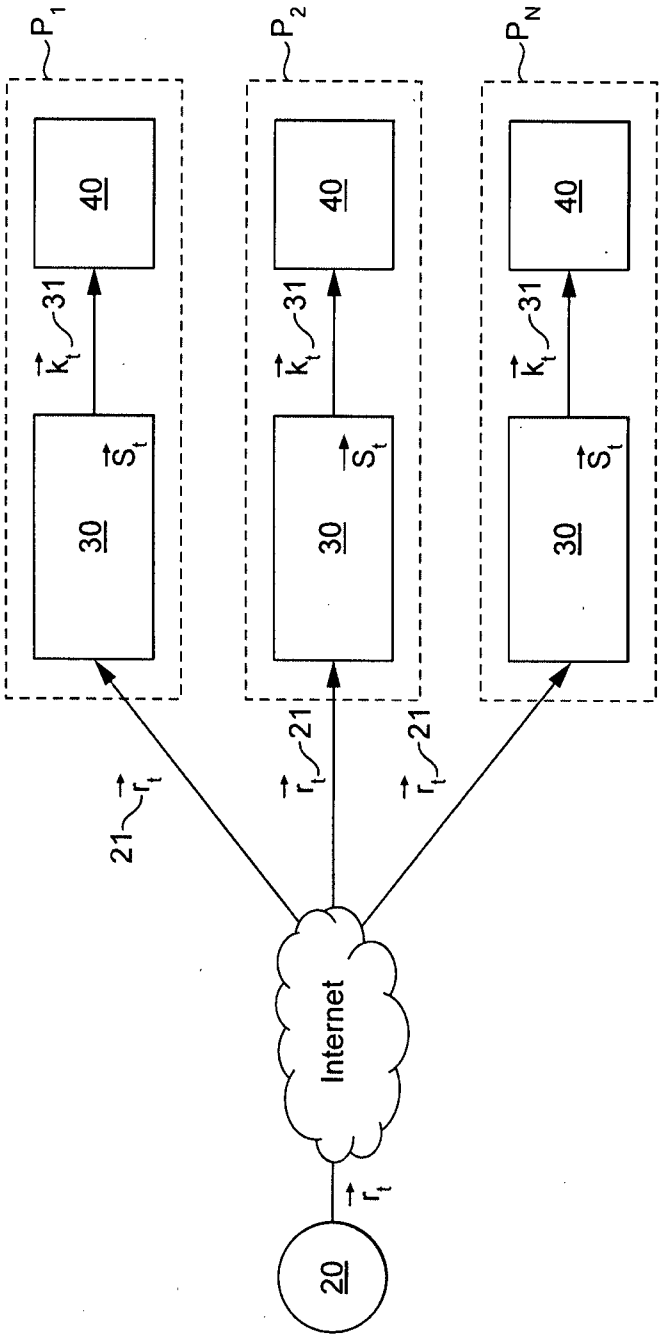

FIG. 1

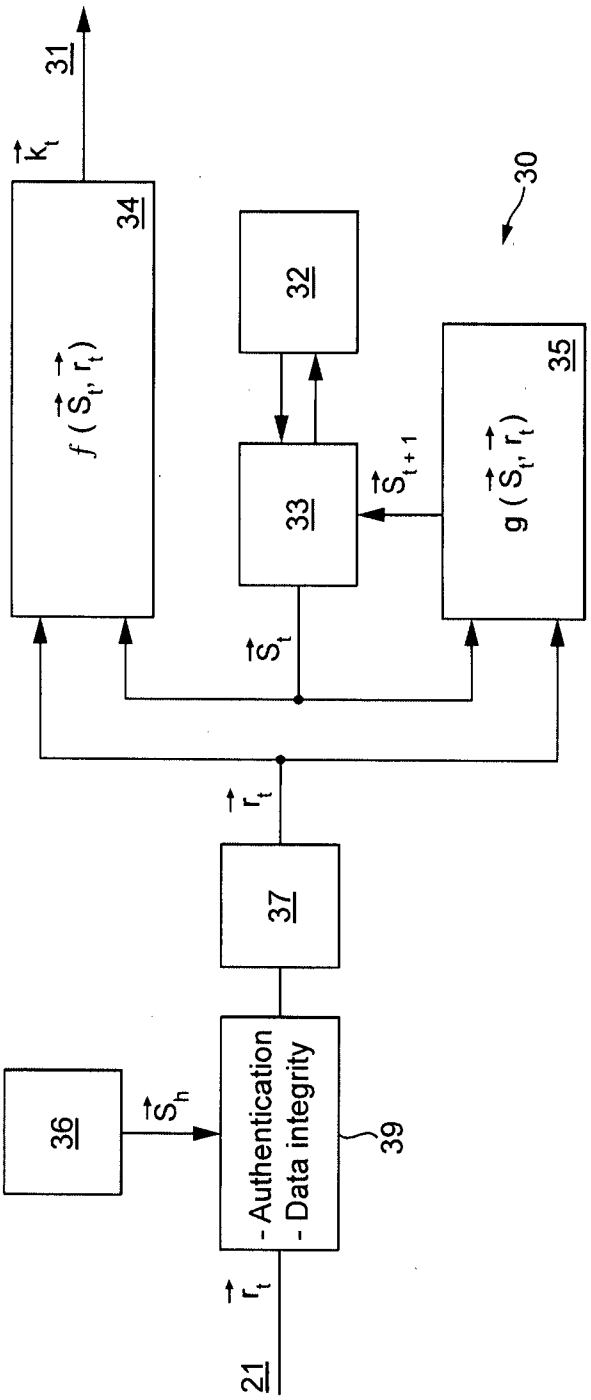
31
$\vec{k}_t$
34
$f(\vec{S}_t, \vec{r}_t)$
32
33
$\vec{S}_t$
$\vec{S}_{t+1}$
35
$g(\vec{S}_t, \vec{r}_t)$
30
$\vec{r}_t$
37
36
$\vec{S}_h$
- Authentication
- Data integrity
39
21
$\vec{r}_t$

FIG. 2

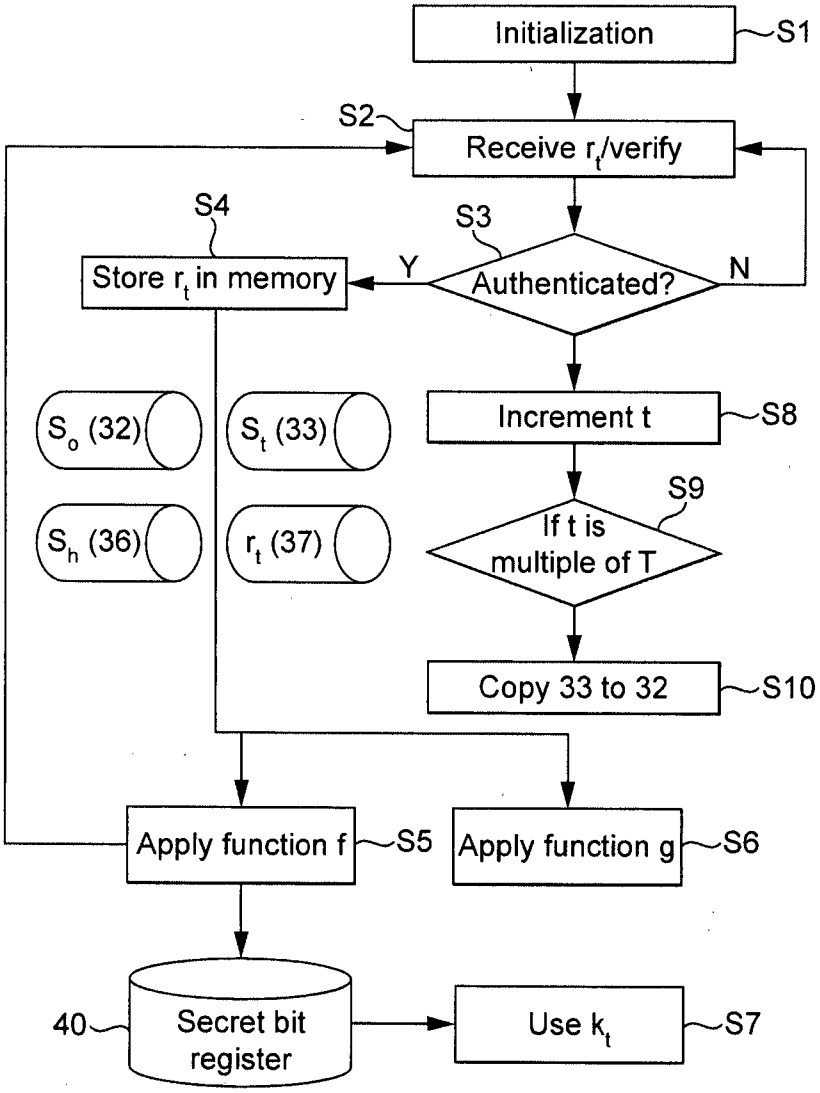
Initialization
S1
S2
Receive r_t/verify
S4
S3
Store r_t in memory
Y
Authenticated?
N
S_o (32)
S_t (33)
Increment t
S8
S9
S_h (36)
r_t (37)
If t is multiple of T
Copy 33 to 32
S10
Apply function f
S5
Apply function g
S6
40
Secret bit register
Use k_t
S7

FIG. 2a

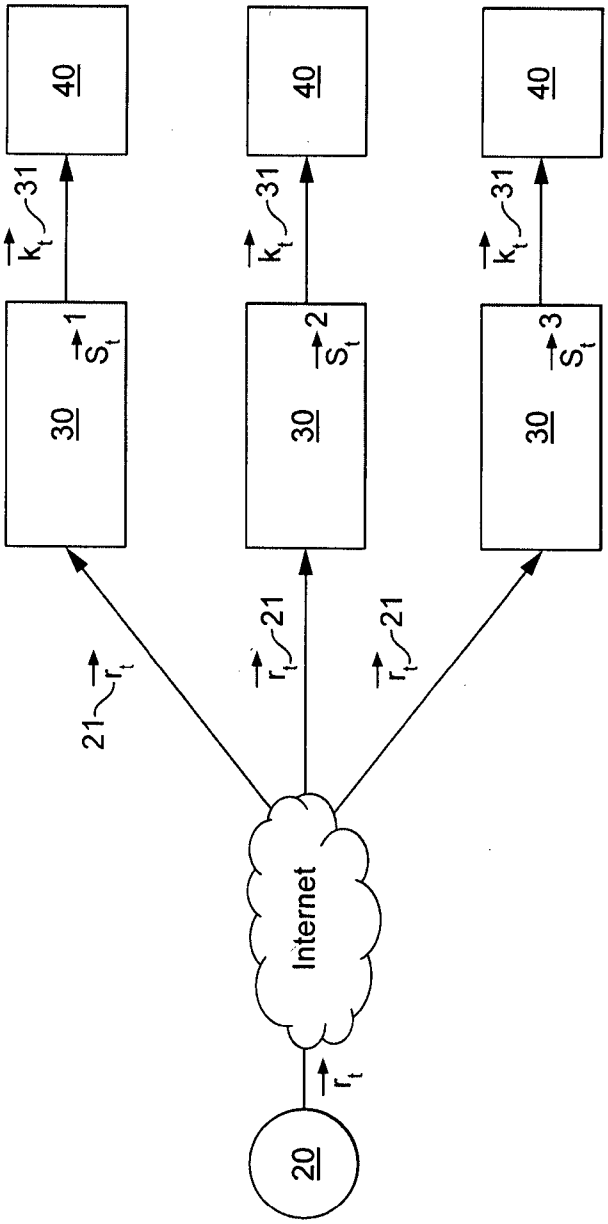
20
r_t
Internet
21
r_t
21
r_t
21
r_t
30
s_t^1
30
s_t^2
30
s_t^3
31
k_t
31
k_t
31
k_t
40
40
40

FIG. 3

GENERATION OF CRYPTOGRAPHIC KEYS

FIELD OF THE INVENTION

[0001] The present invention relates to the generation of private keys for encrypting messages.

BACKGROUND OF THE INVENTION

[0002] Transmission networks using the RSA public-key algorithm (for example as disclosed in U.S. Pat. No. 4,405,829) have been in use throughout the world for more than 10 years. RSA is the first algorithm known to be suitable for signing as well as encryption, and was one of the first great advances in public key cryptography. In particular, the RSA algorithm is one of the building block of the Transport Layer Security (TLS) protocol that provides security for communication systems (such as media players, laptop computers, smartphones and servers) over networks like the Internet. More precisely, the RSA algorithm provides the required security necessary to exchange a secret key between separated parties. This exchanged key can ultimately be used in a symmetric cipher (e.g. AES, 3DES, etc) for encrypted communication.

[0003] The RSA algorithm is based on the assumption that factoring large numbers is difficult and is believed to be secure given sufficiently long private/public key pairs and the use of up-to-date implementations. Similar public key algorithms are based on other difficulties such as the discrete log problem, i.e. DSA (U.S. Pat. No. 5,231,668) and Diffie-Hellman (U.S. Pat. No. 4,200,770) while others, i.e. Elliptic Curve Cryptography (e.g. U.S. Pat. No. 6,563,928), are based on the intractability of finding the discrete logarithm of an elliptic curve element. However, it is possible that algorithms faster than those currently available for factoring large numbers (or finding discrete logarithms) will be discovered. Other methods to break certain implementations of public key algorithms have also been discovered. For example, recent experiments (Pelligrini A. et al, "Fault-based attack of RSA authentication" 2010 Proceedings of the Conference on Design, Automation and Test in Europe) have demonstrated the ability to crack RSA's 1024 bit private key, using a hardware attack, in less than 100 hours and without leaving a single trace.

[0004] Quantum key distribution (QKD) is an alternative to public key distribution to exchange secret keys between authorized parties. QKD is based on the idea that key bits are encoded in quantum systems (e.g. single photons) and exchanged between the parties. An important and unique property of QKD is the ability of the two communicating users to detect the presence of any third party trying to gain knowledge of the key. This results from a fundamental aspect of quantum mechanics: the process of measuring a quantum system in general disturbs the system. A third party trying to eavesdrop on the key must in some way measure it, thus introducing detectable anomalies. In contrast to traditional public key distribution protocols that rely on mathematical hypotheses, QKD elegantly relies on the laws of nature being correct. The most practical implementation of QKD today implies sending weak photon pulses in optical fibres (see e.g., U.S. Pat. No. 6,438,234 and U.S. Pat. No. 7,403,623). However, since it requires information to travel on passive optical channels, its implementation on regenerative and mixed opto-electronical transmission networks such as the Internet is impossible. Furthermore the private-key generation rate is limited by optical attenuation on optical fibres for which no practical solution is currently available. Also, serious flaws of commercial QKD implementations have been demonstrated rendering the systems completely vulnerable to eavesdropping (Lydersen L. et. al., "Hacking commercial quantum cryptography systems by tailored bright illumination", Nature Photonics, Vol. 4, PP. 686-689 (2010)).

[0005] New trends in network data processing, especially cloud computing, video delivery, and multi-party communications, impose new constraints in terms of the computational resources required to achieve the security levels which are deemed acceptable to prevent unlawful breaches. These new trends will require high-rate key-distribution methods that are not only secure but also scalable.

[0006] Since none of the previous protocols enable high-rate secret-key distribution, modern cryptography relies on symmetric cipher algorithms (such as AES, 3DES, etc) that use keys which are much shorter than the plain-text message. They are not information-theoretically secure.

SUMMARY OF THE INVENTION

[0007] According to an aspect of the present invention, there is provided a method of generating secret-keys at a user station comprising:

- **[0008]** receiving a random bit stream at the user station;
- **[0009]** processing a vector of the random bit stream with an internal state according to a first function to generate a first secret key;
- **[0010]** processing the vector of the random bit stream with the internal state according to a second function to generate an updated internal state;
- **[0011]** processing another vector of the random bit stream with the updated internal state to generate a new secret key.

[0012] A further aspect of the invention provides a user station comprising:

- **[0013]** means for receiving a random bit stream;
- **[0014]** means for storing an internal state;
- **[0015]** a first function for processing vectors of the random bit stream with the internal state stored in the storing means to generate secret keys;
- **[0016]** a second function for processing vectors of the random bit stream with the internal state stored in the storing means to generate an updated internal state, which replaces the internal state of the storing means for generating subsequent secret keys.

[0017] The invention is useful in the context where there is a community of user stations as defined above, wherein each user station in the community shares a common secret of the internal state. In this way, secret keys can be commonly simultaneously generated at each user station of the community.

[0018] As an alternative, each user station can have a unique internal state which allows for the generation of private random data for cryptographic protocols. Private random data is an essential ingredient of many cryptographic protocols in use today. Internet protocols such as SSL/TLS or IPSec, which are used to secure the communication channel between a client computer and a server, depend on the existence of such private random data on both sides of the channel. The adoption of new technologies such as cloud computing and virtualization are imposing new constraints on the servers of datacenters. In particular, private random data is becoming a scarce resource in modern datacenters and this method

could be used to, e.g., distribute independent and private random data to the servers of a datacenter.

[0019] Another aspect of the invention provides a computer program product comprising program code means which when executed by a processor at a user station implement the steps of the above-defined method.

[0020] For a better understanding of the present invention and to show how the same may be carried into effect, reference will now be made by way of example to the accompanying drawings.

BRIEF DESCRIPTION OF THE DRAWINGS

[0021] FIG. **1** is a general diagram representing a secret key distribution method for N=3 participating parties, based on the present invention;

[0022] FIG. **2** is a diagram representing the local operations performed by each participating party for a secret key distribution method based on the present invention;

[0023] FIG. **2**A is a flow chart of a key distribution method; and

[0024] FIG. **3** is a general diagram representing a private random-data derivation method for N=3 independent parties, based on the present invention.

DESCRIPTION OF THE PREFERRED EMBODIMENTS

[0025] Before discussing the embodiments of the present invention, some cryptographic background will be set out. According to cryptographic theory, an ideal encryption/decryption protocol was theorized in 1917, known as the one-time pad. This provides in theory proven unconditional security and relies on the exclusive or (XOR) of each bit of a message with a corresponding bit of a key. To provide the necessary security requirements, the key must be truly unpredictable and must be as long as the message. To date this has not been commercially implemented because of technological limitations.

[0026] In contrast, another piece of research focused on showing that asymptotic security can be achieved even with a short secret key provided that a sufficiently large amount of public random data be available to the communicating parties. This is discussed by Maurer in his paper "Conditionally perfect secrecy and approvable secure randomised cipher" in the Journal of Cryptography 5: 53-56 (1992). While the theory is sound, in practice Maurer's randomised cipher suffers from an impractical ratio between the required public random data and the size of the plain text message.

[0027] The embodiments of the present invention presented below illustrate a key distribution protocol which are based on the restrictions of a potential hacker's memory capacity, and computing power. By combining these ideas, and making use of a recent new development in the field of high rate true random number generators, some of Maurer's constraints can be relaxed, thus providing a fast and scalable secret key generation scheme that is suitable for demanding multi-user's applications.

[0028] The following described embodiments of the present invention provide a novel method to generate and distribute secret random data. In summary, the method requires that N participating parties own an identical secret-key generation device and request an identical ultra-high-rate, unpredictable, random signal over a shared public communication network. The method works iteratively. At each iteration, the parties process the public random signal with the internal states of their secret-key generation devices using two publicly known, highly nonlinear functions with strong confusion and diffusion properties. The output of the first function is the generated secret random data, while the output of the second function is the new internal state of the secret-key generation device.

[0029] In a first embodiment, the present invention provides a key distribution method. Unlike the RSA or Diffie-Hellman public-key distribution methods that only rely on computational limitations, the present method also relies on one's inability to store a vast amount of information. This is an improvement over existing protocols and it could be introduced as a replacement for communications demanding high security. The presently described key-distribution method provides participating parties with a vast amount of shared secret random data to be used as secret keys for cryptographic purposes and is well suited for groups containing a fixed number of parties. The number of parties can be arbitrarily large and has no effect on the generation rate of the shared secret randomness. This important feature renders the method scalable.

[0030] The key distribution method starts with an "initialization" phase. First the N parties exchange a shared common secret referred to as the "master key". The master key takes the form of a bit-string of fixed length. This initial exchange of the master key can be implemented with any secure key establishment technique. Next, the participating parties initialize the internal state of their secret-key generation device using all or part of the master key. When only part of the master key is used to initialize the internal state of the secret-key generation device, the remaining part can be used to, e.g., provide authentication or message integrity over the shared public communication network. The initialization phase is preferably performed only once and can be used to generate an arbitrarily large number of secret keys as long as the number of parties remains constant. If a new party enters or a current party leaves the secret sharing group, the key-distribution method should preferably be reinitialized.

[0031] Following initialization is the subsequent "key generation" phase of the present key-distribution method. This phase works iteratively. The N encrypting parties request an identical ultra-high-rate, unpredictable, random signal over the public communication network. In a preferred embodiment, this random signal is a stream of random bits. Each party then process this public random signal with the internal state of his/her secret-key generation device using first and second functions. The functions are publicly known, highly nonlinear functions with strong confusion and diffusion properties. The output of the first function is the generated common secret key, while the output of the second function is the new internal state of the secret-key generation device. The new internal state is then used to generate a next secret key by applying the first function to a subsequent received portion of the random signal and the new internal state. Provided that the N participating parties have initialized their secret-key generation device with the same master key, the presently described key generation phase can generate arbitrary large amount of common secret keys.

[0032] In a second embodiment, the initialization phase is slightly modified such that the participating parties initialize the internal state of their secret-key generation device with independent and private secrets. Thus, no shared common master key needs to be established. The subsequent key gen-

eration phase works identically. However, since the secret-key generation device of each party was initialized with an independent and private secret, each party will generate independent and private random data. Accordingly, the present invention also provides a method to distribute independent and private random data over a public channel. This method for distributing random data is compatible with groups containing an undefined number of parties and is therefore suitable to distribute private random data over a public network such as the Internet.

[0033] To implement embodiments of the invention with high security depends upon two properties of the public random signal. First, the public random signal must be unpredictable, and second it must be of ultra-high rate. New designs of high-bandwidth physical true random number generators (TRNG), e.g. as described in PCT/EP2010/061320, fulfill both requirements. Together with the correct choice of first and second functions, these two properties guarantee that an eavesdropper cannot gain information on the initial state of the private-key generation devices of the parties, nor the subsequently generated secret keys or random data.

[0034] The present invention bears similarities with "key derivation" (e.g. as specified in NIST Special Publication 800-108) since secret keys are generated from an initial shared master key. However it differs from that class of algorithms by the fact that the internal state of the secret-key generation device changes in time. The present invention also differs from "key derivation" by the vast entropy input to the secret-key generation device received from the public random bit stream.

[0035] In the first embodiment, the present invention allows N spatially separated authorized parties to generate shared secret keys from an identical ultra-high-rate, unpredictable, random bit-stream distributed over a public communication network. The generated secret keys can be subsequently used for cryptographic purposes with, e.g., private-key ciphering algorithms such as AES or the information theoretically secure one-time-pad.

[0036] FIG. **1** shows a representation of such a shared communication network for N=3. Each party P**1**, P**2** . . . PN can be located at a specially separate user terminal. Each authorized party P**1**, P**2** . . . PN in the network owns an identical secret-key-generation device **30** that receives a random-bit stream **21** from an ultra-fast TRNG **20**. The random bit stream **21** can be considered to constitute a sequence of random bit vectors r_t. There is no restriction on the physical location of the TRNG **20**. In alternative but equivalent embodiments, the TRNG is owned by one of the parties or stand alone. The TRNG **20** is connected to each secret-key-generation device by a public channel, such as the Internet, meaning that it can be monitored by a potential eavesdropper. The device **30** works iteratively. The period of one iteration is derived from the random-bit vector r_t of predefined length [r] which also serves as a clock. At each new time-step t, starting with the initial time step t=0, the public random-bit vector r_t is injected in device **30** and combined with its internal state s_t of length [s] to output a random and secret bit sequence **31** represented by the binary vector k_t of length [k]. Depending on the cryptographic needs, the random sequence **31** can either be directly used as a shared secret key or feed a register **40** that serves as a random-bit reservoir for subsequent production of longer secret keys.

[0037] FIG. **2** shows a representation of the structure of the algorithm that is implemented inside each secret-key-generation device **30**. FIG. **2** is shown in block form for ease of reference. It will readily be appreciated that the algorithm can be implemented by hardware, software or firmware or any suitable combination thereof. It is expected that the most likely implementation of the algorithm would be by a code sequence held in memory and executed on a processor at each participating party P**1** . . . PN. The algorithm first requires the exchange of a shared common secret referred as the "master key" between the N participating parties. The master key is the combination of binary vectors s_0 of length [s] and s_h, of arbitrary length. The vector s_0 is used to initialize the internal state vector s_t of the secret-key-generation device **30**, and is therefore copied to memory block **33** which holds the current instant of the internal state. The current instance of s_t is stored in memory block **33**. The binary vector s_h (**36** in FIG. **2**) can be used to verify both the authenticity and the data integrity of the public random bit-stream **21** with e.g. Message Authentication Code (MAC) or Hash-based Message Authentication Code (HMAC). After verification the random input vector r_t is stored in register **37**. From time to time, a copy of the internal state s_t is saved in the memory block **32**. This state can be subsequently used as a new s_0 for reinitializing the system if, e.g., one of the participating party lost synchronization with the others.

[0038] Subsequent to this initialization the key-generation starts. At each time step t, the random bit vector r_t and internal state vector s_t are processed by function modules **34** and **35** implementing the functions $k_t=f(s_t,r_t)$ and $s_{t+1}=g(s_t,r_t)$. The functions $f(s_t,r_t)$ and $g(s_t,r_t)$ are public and used to generate the shared key k_t and update the internal state of the secret-key-generation device, respectively. At the next time step, the next random bit vector is processed with the updated internal state, to generate a new secret key. This takes place in a synchronized fashion at each of the participating parties such that any time step t they are each generating the same new secret key, and same updated internal state. Although described herein as key distribution, the method can more accurately be considered as simultaneous generation of common (shared) secret keys by multiple participating parties.

[0039] The security level and execution speed of the presently described key-distribution method highly depends on the properties of the functions f and g. It is the objective of the following paragraphs to briefly discuss some of these properties and their choice for a preferred embodiment.

[0040] The purpose of first function $f(s_t,r_t)$ is to generate the random bit vector to act as secret key $k_t=f(s_t,r_t)$ by mixing the current values of the public random bit vector r_t and secret internal state vector s_t in such a way that the resulting key k_t is both random and secret. The purpose of the second function $g(s_t,r_t)$ is to update the internal state vector $s_{t+1}=g(s_t,r_t)$ of the secret-key-generation device **30**. In a preferred embodiment, both functions are chosen to be balanced (such that all possible outputs k_t are equiprobable and the internal state s_t is unbiased) and fast to compute (to take advantage of the speed of the true random number generator). To insure the privacy of the internal state s_t under plain text attacks and the back-tracking resistance (i.e. the property that if the internal state s_t at time-step t is ever discovered, the private sequences k_T generated at previous time-steps T<t cannot be deduced), both functions should also be hard to invert.

[0041] An important feature of the present invention is the fact that the output k_t at some time-step t depends not only on the current random vector r_t but also on all its previous values, and the initial shared secret s_0 according to the relation 1:

$$k_t=f(s_t,r_t)=f(g(s_{t-1},r_{t-1}),r_t)=f(g(g(s_{t-2},r_{t-2}),r_{t-1}),r_t)=\ldots=f(g(g(g(\ldots g(s_0r_0),\ldots),r_{t-2},r_{t-1}),r_t) \quad (1)$$

[0042] A malicious eavesdropper having access to part or all of some private sequences k_T generated at previous time-steps T<t may wish to exploit the deterministic nature of Eq. (1) to reveal the internal value s_{T0} of device **30** at an earlier time-step T_0. Eq. (1) shows that he may do so by solving a set of [s] binary nonlinear equations for [s] binary variables. To make such an algebraic attack ineffective, the functions f and g must be chosen so that the resulting system has the highest possible non linearity where non linearity is defined as the Hamming distance between the considered function and the closest linear one. With a proper choice of functions f and g, the time required for an eavesdropper to reverse engineer the device **30** would imply to simultaneously record and store an impracticable amount of random data from the TRNG. In a preferred embodiment, f and g are provably secure cryptographic hash functions such as those specified in SHA-2 (see NIST FIPS PUB 180-2 publication).

[0043] The properties of the present invention also depend upon the chosen sizes of the vectors s, r and k. In particular, to avoid brute force attacks, the condition |s|>>|k| must be satisfied. If function f is chosen to be a HMAC based on SHA-256, as defined in RFC 2104, then a preferred choice of vector sizes is |s|=512, |r|=256, and |k|=256.

[0044] FIG. **2***a* is a flow chart illustrating the main steps of the method.

[0045] The method comprises an initialization step S**1** wherein a master key is shared. In initialization step the following takes place: receive the master key $[s_0s_h]$; initialize the state vector by storing s_0 into the memory block (**33**) and store the string s_h into the memory block (**36**); initialize a time counter t to zero. In the subsequent key generation stage, the random stream (**21**) is received from the true random number generator (**20**). Its authenticity and data integrity is verified using s_h. This carried out in step S**2**.

[0046] Step S**3** denotes the step of confirming if the random bit vector is authenticated. If not, it is returned to the verify step of S**2**. If it confirmed, it is stored in the memory (**37**) (S**4**).

[0047] The state of the memory blocks is shown diagrammatically below step S**4** in FIG. **2***a* at this point.

[0048] Step S**5** illustrates that function F is applied on the contents of memories (**33** and **37**) s_t and r_t packets to computer a new secret-key vector k_t (**31**) and place it in a secret bit register (**40**). The secret bit register can be used for cryptography (step S**7**).

[0049] Step S**6** denotes that function G is applied on the contents of memory (**37**) and (**33**) (s_t and r_t) to renew the state vector s_t and store it back into memory (**33**).

[0050] FIG. **2***a* also illustrates a periodic update feature in steps S**8**, S**9** and S**10**. According to step S**8** the time counter t is incremented. Step S**9** determines if t is a multiple oft and, if so, copies the contents of memory **33** to memory **32**.

[0051] A second embodiment is illustrated in FIG. **3**. It is identical to the first embodiment with the exception that the participating parties initialize the internal state of their secret-key generation device with independent and private secrets (s_o^i, i=1,2, . . .). Since the secret-key generation device of each party was initialized with an independent and private secret, each party will generate independent and private true random data without the need for a local true random number generator.

[0052] By combining the technology of a true random number generator as described for example in PCT/EP2010/061320 which can provide true random numbers based on unpredictable quantum fluctuations at a very high speed, for example 4 GB per second with distribution of a random stream, shared secret keys can be simultaneously generated (i.e. distributed) at very high speed, for example around 4 GB per second.

[0053] Moreover, as there is no restriction on the length of the key, one-time pad cryptography can be applied to messages at very high rates, for example 4 GB per second.

[0054] The first embodiment described above thus provides a key distribution method which uses the following components:

[0055] a true random number generator;

[0056] a network capable of transporting generated random numbers;

[0057] a plurality of authorised stations capable of receiving and processing generated random numbers;

[0058] and a common secret shared by the authorised stations, wherein the security simultaneously relies on an eavesdropper's computational memory restrictions.

[0059] In particular, eavesdropping requires to memorise the generated random numbers in order to guess the value of the shared secret keys and/or the value of the common secret. The random number generation rate is preferably so high that the amount of random data to be recorded renders eavesdropping intractable.

[0060] The second embodiment of the present invention provides a private random number derivation method using the following components:

[0061] a true random number generator;

[0062] a network capable of transporting generated random numbers;

[0063] independent stations capable of receiving and processing generated random numbers and owning an independent and private secret;

[0064] wherein the privacy of the resulting derived private data relies on a eavesdropper's computational and memory restrictions.

[0065] In particular, eavesdropping requires to memorise the generated random numbers in order to guess the value of the independent secret of a given independent station and/or the private random data derived by a given independent station. The random number generation rate is preferably so high that the amount of random data to be recorded renders eavesdropping intractable.

[0066] While preferred embodiments of the present invention have been described and disclosed, it will be recognized with those with skills in the art, that modifications are within the true spirit and scope of the invention. The appended claims are intended to cover all such modifications.

1-16. (canceled)

17. A method of generating common secret-keys at a plurality of participating user stations comprising:

receiving a common public random bit stream at each of the participating user stations;

at each user station, processing a vector of the random bit stream with an internal state according to a first function to generate a first secret key wherein the participating user stations share a common secret as said internal state;

processing the vector of the random bit stream with the internal state according to a second function to generate an updated internal state; and

processing another vector of the random bit stream with the updated internal state to generate a new secret key, whereby each of the participating user stations generate the same new secret key and same updated internal state, and the number of participating stations has no effect on the generation rate of common secret keys.

18. A method according to claim **17**, wherein the participating user stations exchange a master key to act as the common secret in an initialization phase.

19. A method according to claim **17**, comprising the step of generating the random bit stream using a true random number generator.

20. A method according to claim **17**, comprising the step of generating the random bit stream using a quantum random number generator.

21. A method according to claim **17**, wherein the random bit stream is received at a rate of around 4 GB per second.

22. A method according to claim **17**, wherein the random bit stream is received at each of the participating user stations from a common random number generator.

23. A method according to claim **17**, wherein the participating user stations are spatially separated and connected by a public network.

24. A method according to claim **17**, comprising the step of encrypting a message having a bit length equal to that of the secret key, the encryption step comprising processing each bit of the message with a corresponding bit of the secret key.

25. A computer program product comprising a non-transitory computer-readable medium having computer program instructions recorded thereon which when executed by a processor at a user station cause the user station to perform the method according to claim **17**.

26. A method according to claim **17**, wherein the time (Ti) taken to invert the first and second functions using state of the art technology, and the rate (R) of the random bit stream are related such that storing (R*Ti) bits exceeds state of the art data storage capacity and makes the protocol secure.

27. A method according to claim **17**, that allows to establish an arbitrarily large amount of private keys to authorized user stations.

28. A user station for use in a community of user stations connected via a public network comprising:

means for exchanging a master key to act as a common secret with other user stations in the community;

means for receiving a random bit stream;

means for storing the common secret as an internal state;

a first function for processing vectors of the random bit stream with the internal state stored in the storing means to generate secret keys;

a second function for processing vectors of the random bit stream with the internal state stored in the storing means to generate an updated internal state, which replaces the internal state of the storing means for generating subsequent secret keys.

29. A community of user stations according to claim **28**, wherein each user station in the community shares the common secret as the internal state.

30. A user station according to claim **28**, comprising encryption means for encrypting a message having a bit length equal to that of the secret key, the encryption means comprising means for processing each bit of the message with a corresponding bit of the secret key.

31. A user station according to claim **28**, which operates such that R×Ti (wherein R is the rate of the random bit stream and Ti is the time taken to invert the first and second functions using state of the art technology) exceeds state of the art data storage capacity.

* * * * *