US 20090068985A1

(19) United States

(12) Patent Application Publication

NGUYEN et al.

(10) Pub. No.: US 2009/0068985 A1

(43) Pub. Date: Mar. 12, 2009

(54) METHOD AND APPARATUS FOR END-TO-END MOBILE USER SECURITY

(75) Inventors: NAM NGUYEN, SAN JOSE, CA (US); DONGGEN ZHANG, FREMONT, CA (US); PAUL TOMALENAS, ALAMO, CA (US)

Correspondence Address:
AKERMAN SENTERFITT
P.O. BOX 3188
WEST PALM BEACH, FL 33402-3188 (US)

(73) Assignee: AT&T KNOWLEDGE VENTURES, L.P., RENO, NV (US)

(21) Appl. No.: 11/854,058

(22) Filed: Sep. 12, 2007

Publication Classification

(51) Int. Cl.
H04M 1/66 (2006.01)

(52) U.S. Cl. 455/411

(57) ABSTRACT

A system that incorporates teachings of the present disclosure may include, for example, a server having a controller to implement an Elliptic Curve Diffie-Hellman (ECDH) cryptosystem and manage a key exchange, authentication, and certificate exchange with a communication device also implementing the ECDH cryptosystem, wherein the server communicates over a network that provides an encrypted communication link for the communication device. Other embodiments are disclosed.

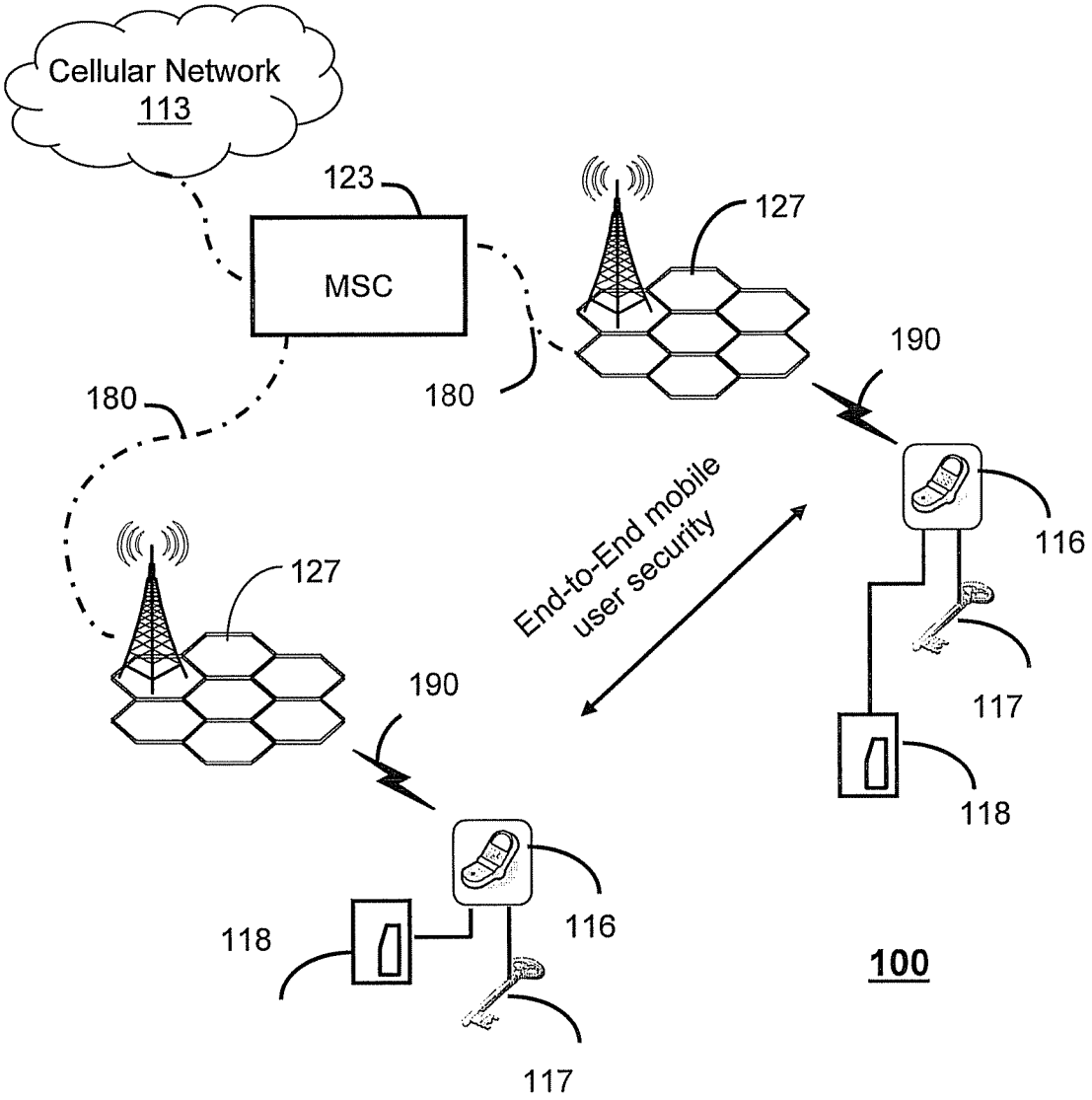

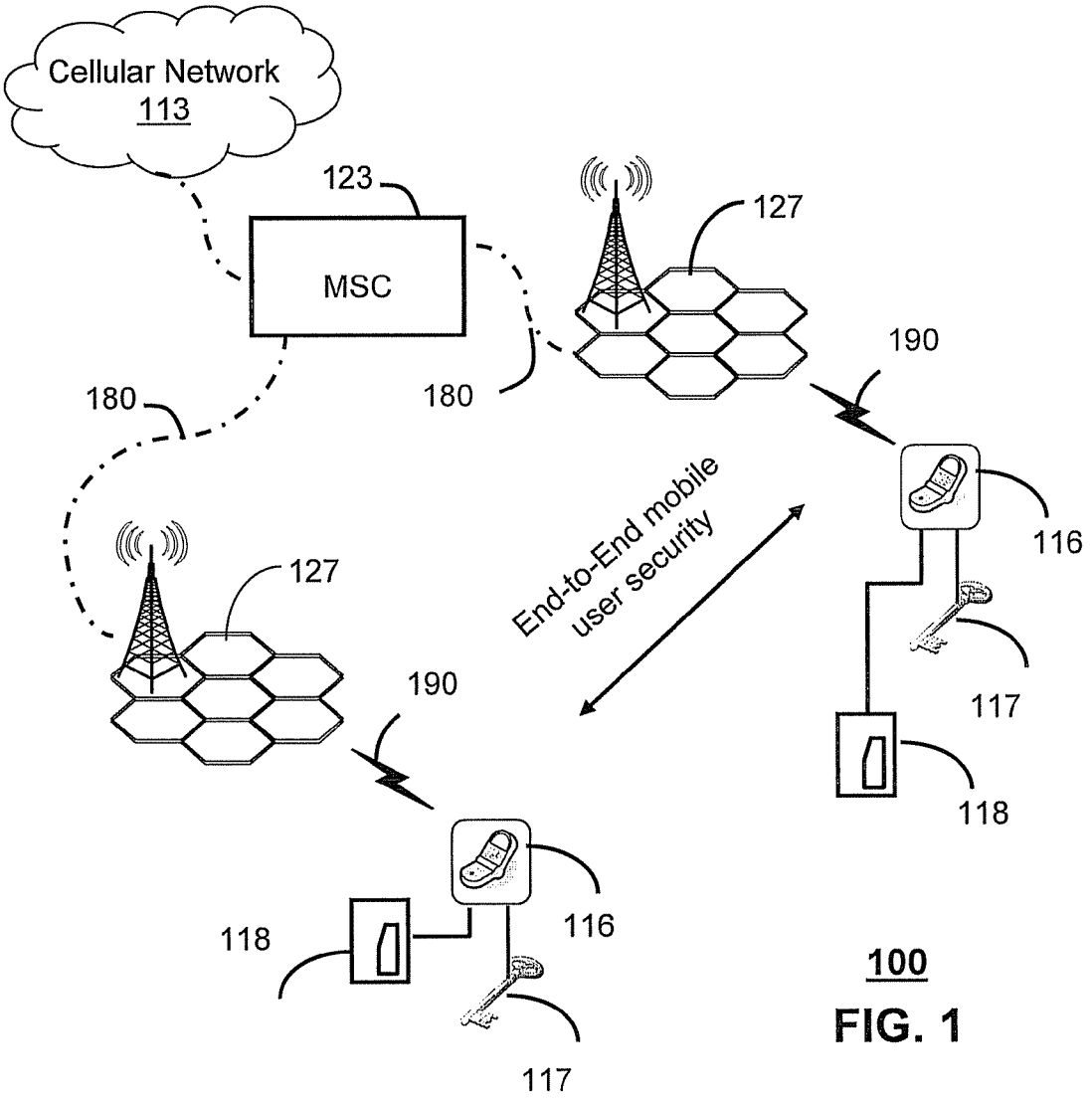
Cellular Network
113
123
MSC
127
180
180
190
116
End-to-End mobile
user security
127
190
117
118
118
116
117
100

FIG. 1

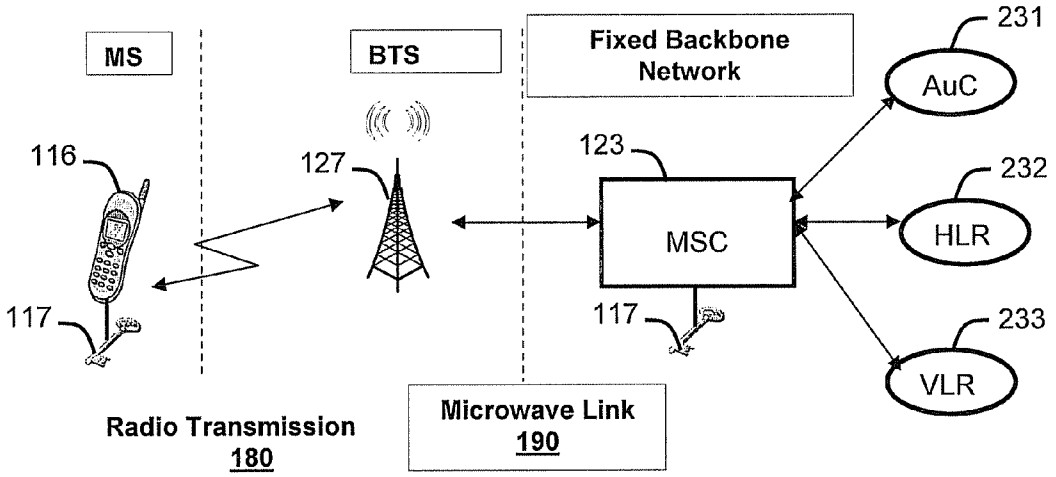

200

FIG. 2

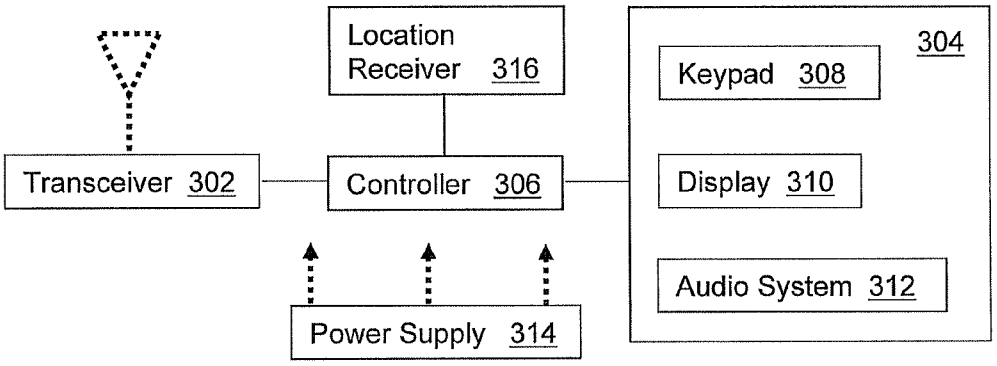

116

FIG. 3

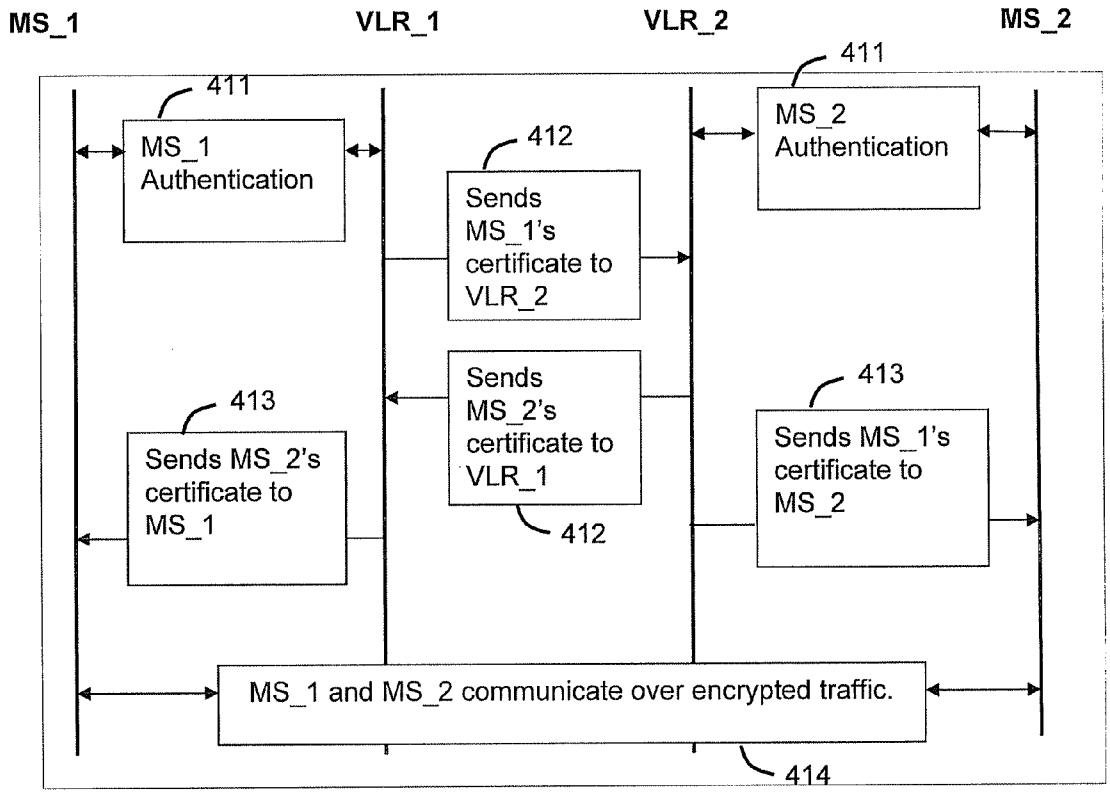
MS_1
VLR_1
VLR_2
MS_2
411
MS_1 Authentication
412
Sends MS_1's certificate to VLR_2
411
MS_2 Authentication
Sends MS_2's certificate to VLR_1
412
413
Sends MS_2's certificate to MS_1
413
Sends MS_1's certificate to MS_2
MS_1 and MS_2 communicate over encrypted traffic.
414

400

FIG. 4

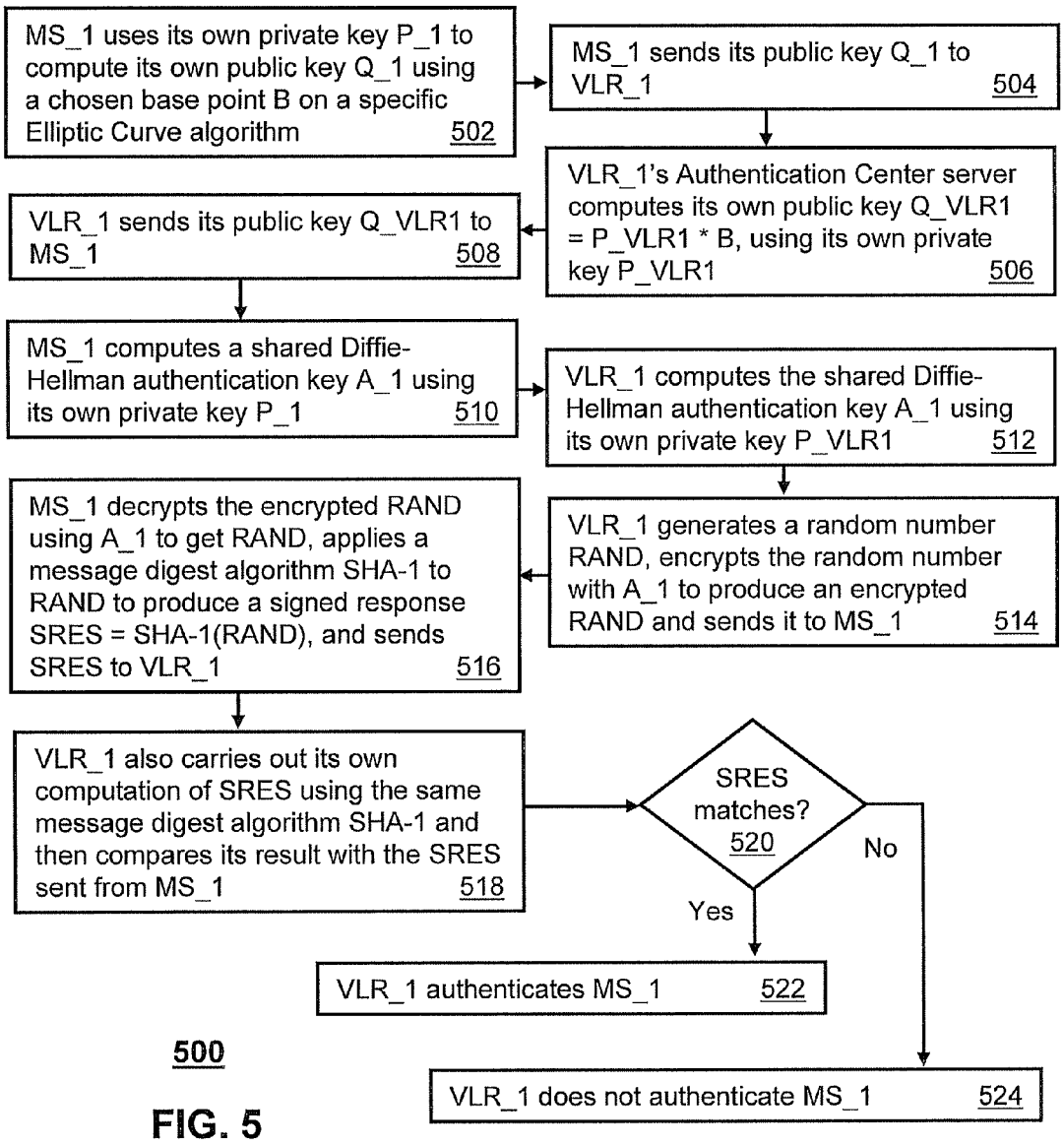
MS_1 uses its own private key P_1 to compute its own public key Q_1 using a chosen base point B on a specific Elliptic Curve algorithm 502
MS_1 sends its public key Q_1 to VLR_1 504
VLR_1's Authentication Center server computes its own public key Q_VLR1 = P_VLR1 * B, using its own private key P_VLR1 506
VLR_1 sends its public key Q_VLR1 to MS_1 508
MS_1 computes a shared Diffie-Hellman authentication key A_1 using its own private key P_1 510
VLR_1 computes the shared Diffie-Hellman authentication key A_1 using its own private key P_VLR1 512
VLR_1 generates a random number RAND, encrypts the random number with A_1 to produce an encrypted RAND and sends it to MS_1 514
MS_1 decrypts the encrypted RAND using A_1 to get RAND, applies a message digest algorithm SHA-1 to RAND to produce a signed response SRES = SHA-1(RAND), and sends SRES to VLR_1 516
VLR_1 also carries out its own computation of SRES using the same message digest algorithm SHA-1 and then compares its result with the SRES sent from MS_1 518
SRES matches? 520
No
Yes
VLR_1 authenticates MS_1 522
VLR_1 does not authenticate MS_1 524

500

FIG. 5

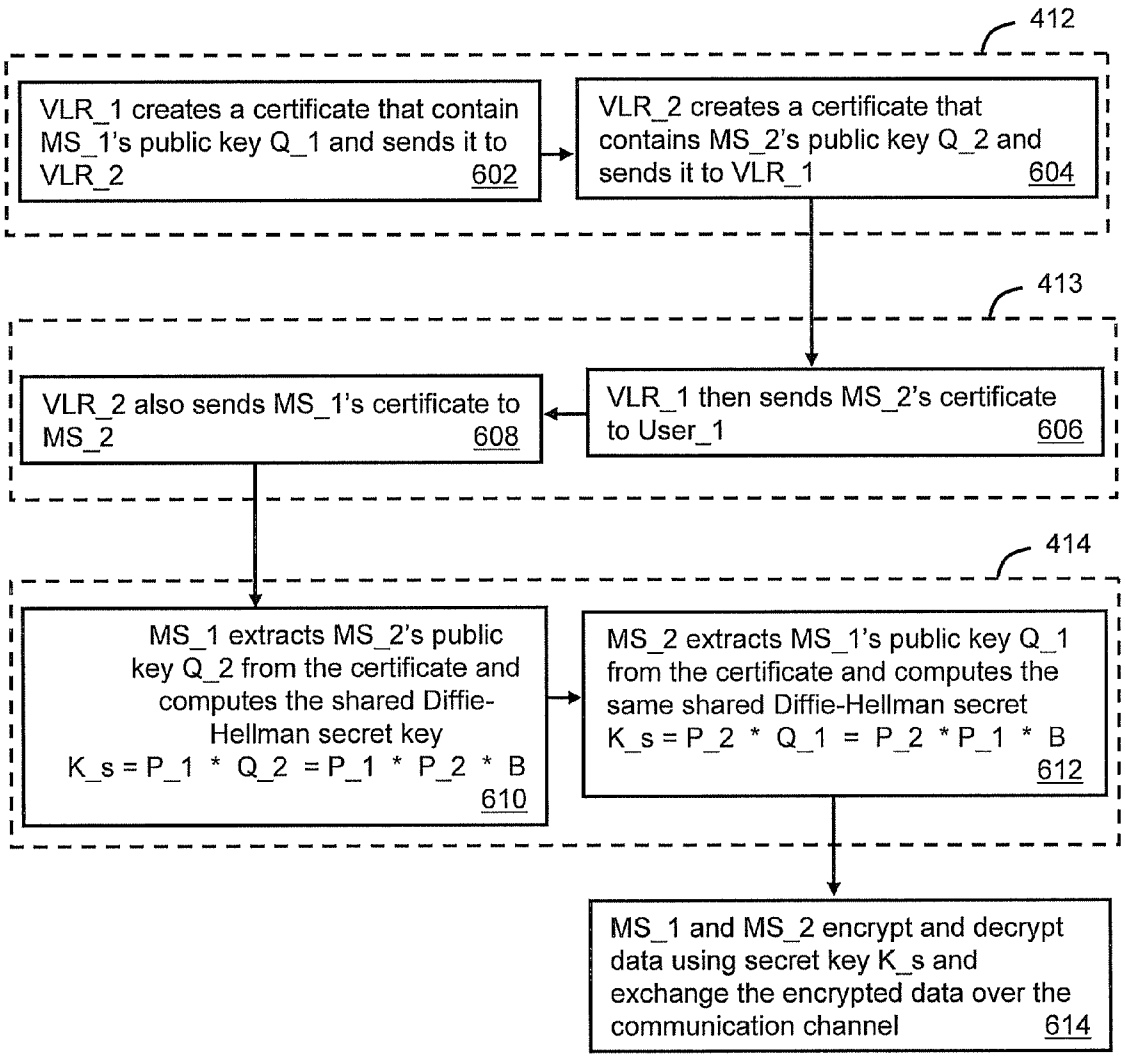
412
VLR_1 creates a certificate that contain MS_1's public key Q_1 and sends it to VLR_2 602
VLR_2 creates a certificate that contains MS_2's public key Q_2 and sends it to VLR_1 604
413
VLR_1 then sends MS_2's certificate to User_1 606
VLR_2 also sends MS_1's certificate to MS_2 608
414
MS_1 extracts MS_2's public key Q_2 from the certificate and computes the shared Diffie-Hellman secret key K_s = P_1 * Q_2 = P_1 * P_2 * B 610
MS_2 extracts MS_1's public key Q_1 from the certificate and computes the same shared Diffie-Hellman secret K_s = P_2 * Q_1 = P_2 * P_1 * B 612
MS_1 and MS_2 encrypt and decrypt data using secret key K_s and exchange the encrypted data over the communication channel 614

FIG. 6 600

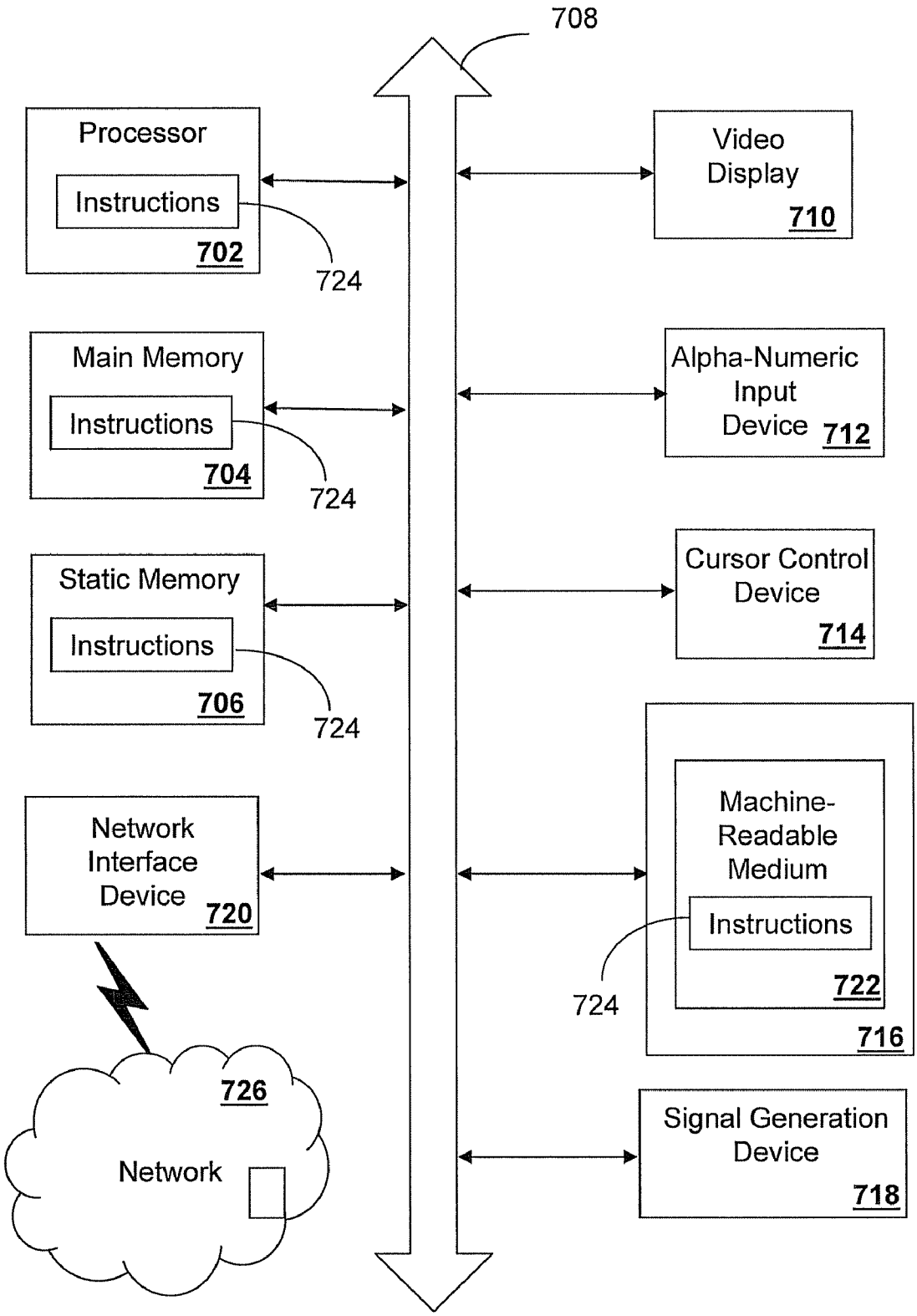
708
Processor
Instructions
702
724
Main Memory
Instructions
704
724
Static Memory
Instructions
706
724
Network Interface Device
720
726
Network
Video Display
710
Alpha-Numeric Input Device
712
Cursor Control Device
714
Machine-Readable Medium
Instructions
722
724
716
Signal Generation Device
718

FIG. 7 700

METHOD AND APPARATUS FOR END-TO-END MOBILE USER SECURITY

FIELD OF THE DISCLOSURE

[0001] The present disclosure relates generally to communication systems and more specifically to a method and apparatus for end-to-end mobile user security in a network.

BACKGROUND

[0002] Most current mobile phones connect to a cellular network of base stations which are in turn interconnected to the public switched telephone network (PSTN). Global System for Mobile Communications (GSM) is the most popular standard for mobile phones in the world. GSM technology operates over a cellular network and due to certain technological advances is considered a second generation mobile phone system.

[0003] Although GSM differs significantly from its predecessor technologies with regard to signaling and speech channels, GSM is still vulnerable to basic forms of passive security attack, such as eavesdropping. This is mainly due to a signaling link within the fixed infrastructure part of the GSM signaling network which can expose users' unencrypted phone calls and data to an attacker if the attacker can manage to gain direct access to the signaling network.

[0004] GSM communications today are encrypted at the RF link between the cell phone and base station. The fixed link between the GSM base station and a mobile switching center providing the backbone of GSM network is however unencrypted.

BRIEF DESCRIPTION OF THE DRAWINGS

[0005] FIG. **1** depict an exemplary embodiment of a communication system;

[0006] FIG. **2** depicts an exemplary communication channel of the communication system;

[0007] FIG. **3** depicts an exemplary embodiment of a mobile communication device;

[0008] FIGS. **4-6** depict exemplary flow diagrams corresponding to methods operating in portions of the communication system; and

[0009] FIG. **7** is a diagrammatic representation of a machine in the form of a computer system within which a set of instructions, when executed, may cause the machine to perform any one or more of the methodologies discussed herein.

DETAILED DESCRIPTION

[0010] In one embodiment of the present disclosure, a computer readable storage medium can have instructions for providing information associated with an Elliptic Curve Diffie-Hellman (ECDH) cryptosystem to a group of Mobile Stations (MSs) using a base transceiver station, authenticating a first MS of the group of MSs using a first Visitor Location Register (VLR) of a Mobile Switching Center (MSC) and authenticating a second MS of the group of MSs with a second VLR of the MSC, sending a first certificate of the first MS from the first VLR to the second VLR and sending a second certificate of the second MS from the second VLR to the first VLR, and sending the first certificate from the second VLR to the second MS and sending the second certificate from the first VLR to the first MS, wherein data communicated between the first MS and the second MS is encrypted with a secret key computed individually by both the first MS and the second MS from the first certificate and the second certificate, respectively.

[0011] In another embodiment of the present disclosure, a network element can have a controller to establish connectivity between at least two Mobile Stations (MSs) that are implementing a key exchange algorithm with a Mobile Switching Center (MSC), wherein the at least two MSs each compute their own secret keys using the key exchange algorithm individually with their own private keys, wherein the at least two MSs encrypt data transmitted by the network element with their own secret keys, and wherein the at least two MSs communicate with each other using the encrypted data.

[0012] In another embodiment of the present disclosure, a server can have a controller to implement an Elliptic Curve Diffie-Hellman (ECDH) cryptosystem and manage a key exchange, authentication, and certificate exchange with a communication device also implementing the ECDH cryptosystem, wherein the server communicates over a network that provides an encrypted communication link for the communication device.

[0013] In another embodiment of the present disclosure, a method can involve implementing an Elliptic Curve Diffie-Hellman (ECDH) cryptosystem on at least two Mobile Stations (MSs) and a Mobile Switching Center (MSC), wherein each of the at least two MSs produces its own secret key used for data encryption from its own respective private keys during a key exchange, and providing an encrypted communication link between the at least two MSs using the ECDH cryptosystem.

[0014] FIG. **1** depicts an exemplary embodiment of a communication system **100**. The communication system **100** can comprise a cellular network **113**, a mobile switching center (MSC) **123**, at least one base station **127**, and at least one mobile station (MS). The BTS **127** can provide connectivity between the MS **116** and the MSC **123** via one or more modes of communication, such as radio interface **180** and microwave link **190**. The MS **116** can be a cell phone device or any other communication device. The present disclosure also contemplates the use of other types of communication devices, including other types of voice, video and data devices. The foregoing components of the communication system **100** can utilize common computing and communications technologies to support circuit-switched and/or packet-switched communications.

[0015] The cellular network **113** can support voice and data services over a number of access technologies such as GSM, GSM-GPRS, EDGE, CDMA-1X, UMTS, WiMAX, software defined radio (SDR), and other known and future technologies. In one arrangement, the cellular network **113** can be coupled to base stations **127** under a frequency-reuse plan for communicating over-the-air with roaming MS **116**. The communication system **100** can also comprise a packet-switched network (not shown), which can be an Internet Service Provider (ISP) network

[0016] The MS **116** can include an identification module **118**, such as a secure identification or identity module (e.g., a SIM card), containing subscription information, account data, personal information, and private/public key information. The identification module **118** can have an associated memory (not shown) for storing data associated with a private key. The private key can be used to generate a public key which can be used to securely encrypt data. The private key is kept secret, while the public key may be widely distributed.

The keys are related mathematically, but the private key cannot be practically derived from the public key. Data encrypted with the public key can be decrypted only with the corresponding private key. This can be used to ensure confidentiality. Data signed with the sender's private key can be verified by anyone who has access to the sender's public key, thereby proving that the sender signed it and that the message has not been tampered with. This can be used to ensure authenticity.

[0017] The communication system **100** can provide an end-to-end mobile user security. As an example, at least two MSs **116** in the communication system **100** can implement a key exchange algorithm **117** for secret key generation. Each MS **116** can generate a secret key that can be used to encrypt data exchanged between the two MSs **116**. In one embodiment, only the two MSs **116** can compute the secret key used for data encryption. This can ensure that the encrypted data transmitted through out the entire cellular network **113** (both radio link **180** and fixed signaling portion of the microwave link **190**) can be decrypted only by the two communicating users and hence mitigate eavesdropping.

[0018] FIG. **2** depicts an exemplary communication channel **200** for a portion of the communication system **100**. The communication channel **200** is composed of three main components: the mobile station (MS) **116**, the base transceiver station (BTS) **127**, and the mobile switching center (MSC) **123**. The radio link **180** is shown between the MS **116** and the BTS **127**. The signaling portion of the microwave link **190** is shown between the BTS **127** and the MSC **123**. The MS **116** and the MSC **123** each implement the key exchange algorithm **117** to encrypt the entire communication channel **200** and ensure security across the radio link **180** and the signaling link **190**.

[0019] The MSC **123** can include an authentication center (AuC) **231**, a Home Location Register (HLR) **232**, and/or a Visitor Location Register (VLR) **232** each implementing the key exchange algorithm **117**. The key exchange algorithm **117** protects the security of the entire communication channel between any two mobile users. The key exchange algorithm can be based on the Elliptic Curve Diffie-Hellman (ECDH) cryptosystem, which itself is a key exchange algorithm that is based on Elliptic Curve Cryptography (ECC) for public/private key generation

[0020] ECC is an approach to public-key cryptography based on an algebraic structure of elliptic curves over finite fields. An elliptic curve is a plane curve defined by an equation of the form $y^2=x^3+ax+b$. The set of points on such a curve can be shown to form a commutative group G, such that a*b=b*a for all a and b in G. Elliptic Curve Diffie-Hellman (ECDH) is a key agreement protocol that allows the two MSs to establish a shared secret key over an insecure channel. The secret key can then be used to encrypt subsequent communications using a symmetric key cipher.

[0021] In a GSM network, the key exchange algorithm **117** can replace ciphering algorithms GSM uses for authenticating the MS (which is called A3), secret key generation (called A8), and data encryption of radio traffic (called A5). The A3-A8 algorithms are proprietary algorithms which have not been thoroughly evaluated by the public cryptography community, in part due to proprietary reasons. As noted in the current field of cryptography research, A3, A5, and A8 are all vulnerable to crypto-analytical attacks and can compromise the exchange of sensitive information between MSs **116** in the communication system **100**.

[0022] In one exemplary configuration, the A3, A5, and A8 algorithms can be replaced with the ECDH algorithm **117** in both the GSM users' SIM cards **118** and the GSM AuC **231** server to achieve high-level security. Due to the inherent nature of ECDH cryptosystem, the secret key used in data encryption can only be computed by the two MSs **116** of the communicating users using their own private keys. No one else in the communication system **100** can compute the secret key, including the GSM authentication center **231**. This ensures that the encrypted data transmitted through out the entire GSM network—both radio link **210** and fixed signaling link **220**—can be decrypted only by the two communicating MSs.

[0023] The authentication center **231** can compute its own authentication key using its own private key separately from the MSs. The authentication key used to authenticate a user with the GSM network. This prevents the GSM authentication center **231** from having to store users' authentication keys in it's database. This eliminates any chance of an intruder hacking the database for authentication keys. Furthermore, the ECC is more efficient compared to other available public-key cryptosystems (such as RSA and DSA). ECC provides equivalent security as others cryptosystems but with smaller key sizes. Implementing ECC as the key encryption algorithm **117** on MS **116** and MSC **123** as shown in FIG. **2** leads to a new wireless security architecture that has higher speeds, lower power consumption, bandwidth savings, storage efficiencies, and smaller certificates.

[0024] FIG. **3** depicts an exemplary embodiment of the communication device **116**. The communication device **116** can comprise a wired and/or wireless transceiver **302**, a user interface (UI) **304**, a power supply **314**, a location receiver **316**, and a controller **306** for managing operations thereof. In an embodiment where the communication device **116** operates in a landline environment, the transceiver **302** can utilize common wireline access technology to support POTS or VoIP services.

[0025] In a wireless communications setting, the transceiver **302** can utilize common technologies to support singly or in combination any number of wireless access technologies including without limitation cordless phone technology (e.g., DECT), Bluetooth™, Wireless Fidelity (WiFi), Worldwide Interoperability for Microwave Access (WiMAX), Ultra Wide Band (UWB), software defined radio (SDR), and cellular access technologies such as CDMA-1X, W-CDMA/HSDPA, GSM/GPRS, TDMA/EDGE, and EVDO. SDR can be utilized for accessing a public or private communication spectrum according to any number of communication protocols that can be dynamically downloaded over-the-air to the terminal device. It should be noted also that next generation wireless access technologies can be applied to the present disclosure.

[0026] The UI **304** can include a keypad **308** with depressible or touch sensitive navigation disk and keys for manipulating operations of the communication device **116**. The UI **304** can further include a display **310** such as monochrome or color LCD (Liquid Crystal Display) for conveying images to the end user of the terminal device, and an audio system **312** that utilizes common audio technology for conveying and intercepting audible signals of the end user.

[0027] The power supply **314** can utilize common power management technologies such as replaceable batteries, supply regulation technologies, and charging system technologies for supplying energy to the components of the terminal

device and to facilitate portable applications. In stationary applications, the power supply **314** can be modified so as to extract energy from a common wall outlet and thereby supply DC power to the components of the communication device **116**.

[0028] The location receiver **316** can utilize common technology such as a common GPS (Global Positioning System) receiver that can intercept satellite signals and therefrom determine a location fix of the communication device **116**.

[0029] The controller **306** can utilize computing technologies such as a microprocessor and/or digital signal processor (DSP) with associated storage memory such a Flash, ROM, RAM, SRAM, DRAM or other like technologies for controlling operations of the aforementioned components of the terminal device.

[0030] FIG. **4** depicts an exemplary diagram **400** illustrating method steps for encrypting an end-to-end communication channel between at least two mobile stations (MSs). Diagram **400** illustrates steps associated with user authentication, certificate exchange, and data encryption between two end users operating two MSs in the communication system **100**.

[0031] Briefly, each MS can be associated with a corresponding VLR to provide network authorization. For example, MS_**1** can be associated with VLR_**1**, and MS_**2** can be associated with VLR_**2**. At step **411**, user authentication is performed for each of the at least two MSs. For example, VLR_**1** can authenticate MS_**1** on the GSM network. At approximately the same time, VLR_**2** can authenticate MS_**2** on the GSM network. User authentication can be a first step for both MSs and can ensure that the user is authorized to register on the network. During step **411**, MS_**1** and MS_**2** can also each generate and send a public key to their corresponding VLR as will be explained later in method **500** of FIG. **5**. In particular, a private key for each MS is used to generate the corresponding public key which is exchanged between MSs and VLRs.

[0032] At step **412**, VLR_**1** can generate and send MS_**1**'s certificate to VLR_**2**, responsive to authenticating the MS_**1**. Notably, VLR_**1** can generate the certificate from MS_**1**'s public key. Upon receiving MS_**1**'s certificate, VLR_**2** can proceed to send MS_**2**'s certificate to VLR_**1**, responsive to authenticating the MS_**2**. VLR_**2** generates the certificate from MS_**2**'s public key.

[0033] At step **413**, VLR_**2** can then proceed to send MS_**1**'s certificate to the second user operating MS_**2**. At approximately the same time, VLR_**1** can proceed to send MS_**2**'s certificate to the first user operating MS_**1**. Each MS can then proceed to extract the other MS's public key from the received certificate to compute the shared secret key. At step **414**, MS_**1** and MS_**2** can each user their own computed shared secret key to encrypt data communications between the two MSs.

[0034] FIG. **5** depicts an exemplary method **500** operating in portions of the communication systems **100**. Briefly, method **500** is directed to authenticating a user of a mobile station (MS) by way of a VLR, for example, in a GSM network. The method **500** shown corresponds to a particular embodiment for user authorization **411** presented in FIG. **4**, though other steps can be included. When describing the method **500**, reference will be made to FIG. **1** through **3**, although it must be noted that the method **500** can be practiced in any other suitable system or device.

[0035] In the following example, a GSM subscriber User_**1** operating MS_**1** can roam into a visitor domain controlled by the visitor Location Register **1** (VLR_**1**). MS_**1** can go through the following steps of method **500** to authenticate itself with the GSM network via VLR_**1**. It would be apparent to an artisan with ordinary skill in the art that other embodiments not depicted in FIG. **5** are possible without departing from the scope of the claims described below.

[0036] Method **500** begins with step **502** in which MS_**1** can use its own private key P_**1** to compute its own public key Q_**1** using a chosen base point B on a specific Elliptic Curve algorithm. The base point "B" can be a random value selected from an elliptic curve algorithm. B does no need to be a secret value and can be available to devices within the communication system **100**. In practice, providers within the communication system **100** can determine how the base point B is calculated and distributed among MSs and VLR's. For instance, in one embodiment a unique base point can be used for the entire GSM network that is pre-built into MSs' SIM cards and VLRs. Another implementation option provides a distinct and temporary base point B for each communication session.

[0037] At step **504**, MS_**1** can send its public key Q_**1** to VLR_**1**, for example over the communication system **100**, using packet based or circuit based communication. As another example, the public key Q_**1** can be transmitted to VLR_**1** over an Internet Protocol (IP) communication link. At step **506**, VLR_**1**'s Authentication Center server can compute its own public key Q_VLR**1**=P_VLR**1***B, using its own private key P_VLR**1**. Notably, VLR_**1** also can use the same base point B which is made available prior to the communication. VLR_**1** can then send its public key Q_VLR**1** to MS_**1** as shown in step **508**. At this point, both MS_**1** and VLR_**1** have each generated their own public key from their own respective private key, and exchanged the public keys with one another.

[0038] Each MS can use the public key received from the other MS along with its own private key to generate a shared Diffie-Hellman authentication key. For instance, at step **510**, MS_**1** computes the shared Diffie-Hellman authentication key A_**1** using its own private key P_**1**:

$$\begin{aligned} A_1 &= P_1 * Q_VLR1 = P_1 * P_VLR1 * B \\ &= P_VLR1 * Q_1 = P_VLR1 * P_1 * B \end{aligned}$$

Note that the authentication key A_**1** can be computed dynamically and individually by MS_**1** and VLR_**1** and it does not need to be stored in the VLR_**1**'s Authentication Center database.

[0039] Similarly, at step **512**, VLR_**1** can compute the shared Diffie-Hellman authentication key A_**1** using its own private key P_VLR**1**, in accordance with the same method steps above. As a result of the elliptic curve algorithm, the authentication key A_**1** generated by MS_**1** should be the same as the authentication key generated by VLR_**1**, as shown in the equation above. Although, neither MS_**1** nor VLR_**1** is aware of the authentication key A_**1** value generated by the other, each can perform a subsequent operation together to validate the value.

[0040] For example, VLR_**1** at step **514** can generate a random number RAND and then encrypt the random number with A_**1** to produce an encrypted RAND. VLR_**1** can then

proceed to send the encrypted RAND to MS_1. At step **516**, MS_1 decrypts the encrypted RAND using A_1 to get RAND. MS_1, can apply a message digest algorithm SHA-1 to RAND to produce a signed response SRES=SHA-1 (RAND), and then sends SRES to VLR_1. VLR_1 can also carry out its own computation of SRES using the same message digest algorithm SHA-1 and then compares its result with the SRES sent from MS_1 at step **518**.

[0041] If at step **520**, the SRES generated by VLR_1 matches the SRES received from MS_1, VLR_1 can then authenticate MS_1 with VLR_1, as shown in step **522**. That is, VLR_1 authenticates that MS_1 does in fact hold the private key P_1 it claims, and authorizes MS_1 for communication through VLR_1. If however, the SRES generated by VLR_1 does not match the SRES received from MS_1, VLR_1 does not authenticate MS_1 with VLR_1, as shown in step **524**. In such regard, VLR_1 cannot confirm that MS_1 does in fact have the private key P_1 it claims to have. Accordingly, VLR_1 cannot confirm to a second VLR_2 desiring to securely communicate with MS_1, that MS_1 is authorized to communicate on the cellular network **113**. After authenticating User_1 of MS_1 and User_2 of MS_2, VLR_1, VLR_2 and each MS has the public key of its own subscriber User_1 and User_2, respectively

[0042] Method **500** can further continue to method **600** shown in FIG. **6**. Briefly, method **600** of FIG. **6** corresponds to one particular embodiment of the steps **412-414** previously presented in FIG. **4**. It should be noted that method **600** can include more or less than the number of steps shown. When describing the method **600**, reference will be made to FIGS. **1** through **3**, although it must be noted that the method **600** can be practiced in any other suitable system or device.

[0043] At step **602**, VLR_1 can create a certificate that contains MS_1's public key Q_1 and sends it to VLR_2. The certificate is an electronic document which can incorporate a digital signature to bind together the public key with an identity, for example information such as the name of a person or an organization, and/or their address. Similarly, at step **604**, VLR_2 can create a certificate that contains MS_2's public key Q_2 and send it to VLR_1. It should also be noted that further means of security can be presented upon completion of steps **602** and **604** to protect the privacy of the certificate contents while they are being sent between VLRs. As one example, the signature can be endorsed by a certificate authority. Notably, the network providers or operators within the communication system **100** can determine a specific implementation for adding certificate privacy.

[0044] At step **606**, VLR_1 can then send MS_2's certificate to User_1. Similarly, at step **608**, VLR_2 can send MS_1's certificate to MS_2. MS_1 can extract MS_2's public key Q_2 from the certificate at step **610** and can compute the shared Diffie-Hellman secret key:

$$K_s=P_1*Q_2=P_1*P_2*B$$

[0045] Similarly, MS_2 can extract MS_1's public key Q_1 from the certificate at step **612** and can compute the same shared Diffie-Hellman secret:

$$K_s=P_2*Q_1=P_2*P_1*B$$

[0046] It should be noted that K_s is the same for both computations performed by MS_1 and MS_2. At step **614**, MS_1 and MS_2 can encrypt and decrypt data using secret key K_s and can exchange the encrypted data over the communication channel. Notably, no other entity except MS_1 and MS_2 can compute K_s since no one other than MS_1 and MS_2 have the private keys P_1 and P_2, respectively.

[0047] The methods proposed herein improve the end-to-end security of the entire network, including the radio interface as well as the fixed signaling backbone network in multiple ways. For example, the communication channel between any two GSM subscribers can be entirely encrypted and hence eavesdropping attacks on the network can be suppressed, or entirely prevented and eliminated. As another example, authentication mechanisms can be secured without having to store subscribers' authentication keys in the GSM Authentication Center database. This prevents any type of masquerade attack on the network. As yet another example, Elliptic Curve Cryptosystem (ECC) are a public algorithm and have been intensively tested by many public cryptographic groups and have been proven to provide high security with much smaller key sizes as compared to others existing public-key algorithms. ECC can replace current GSM proprietary algorithms such as A3, A5, A8. Also, due to its highly efficient computational power, ECC in addition to use in GSM networks, can be applied as well to any other wireless network architectures that demand high security, low power and bandwidth consumption, storage efficiency, and smaller footprints.

[0048] Upon reviewing the aforementioned embodiments, it would be evident to an artisan with ordinary skill in the art that said embodiments can be modified, reduced, or enhanced without departing from the scope and spirit of the claims described below. As an example, wireless providers can replace all of their subscribers' old mobile station (MS) SIM cards with the new ones having a built-in or embedded Elliptic Curve Cryptosystem. During the transition to the ECC, the wireless providers can implement an interim solution to track all subscribers still using the former SIM cards. The wireless providers can continue to use the former security mechanism for legacy GSM users until the subscribers' SIM cards are replaced. Also, other embodiments target end-end security for mobile to mobile users across a PSTN network, or IP based network.

[0049] These are but a few examples of modifications that can be applied to the present disclosure without departing from the scope of the claims. Accordingly, the reader is directed to the claims section for a fuller understanding of the breadth and scope of the present disclosure.

[0050] FIG. **7** depicts an exemplary diagrammatic representation of a machine in the form of a computer system **700** within which a set of instructions, when executed, may cause the machine to perform any one or more of the methodologies discussed above. In some embodiments, the machine operates as a standalone device. In some embodiments, the machine may be connected (e.g., using a network) to other machines. In a networked deployment, the machine may operate in the capacity of a server or a client user machine in server-client user network environment, or as a peer machine in a peer-to-peer (or distributed) network environment.

[0051] The machine may comprise a server computer, a client user computer, a personal computer (PC), a tablet PC, a laptop computer, a desktop computer, a control system, a network router, switch or bridge, or any machine capable of executing a set of instructions (sequential or otherwise) that specify actions to be taken by that machine. It will be understood that a device of the present disclosure includes broadly any electronic device that provides voice, video or data communication. Further, while a single machine is illustrated, the

term "machine" shall also be taken to include any collection of machines that individually or jointly execute a set (or multiple sets) of instructions to perform any one or more of the methodologies discussed herein.

[0052] The computer system **700** may include a processor **702** (e.g., a central processing unit (CPU), a graphics processing unit (GPU, or both), a main memory **704** and a static memory **706**, which communicate with each other via a bus **708**. The computer system **700** may further include a video display unit **710** (e.g., a liquid crystal display (LCD), a flat panel, a solid state display, or a cathode ray tube (CRT)). The computer system **700** may include an input device **712** (e.g., a keyboard), a cursor control device **714** (e.g., a mouse), a mass storage medium **716**, a signal generation device **718** (e.g., a speaker or remote control) and a network interface device **720**.

[0053] The mass storage medium **716** may include a computer-readable storage medium **722** on which is stored one or more sets of instructions (e.g., software **724**) embodying any one or more of the methodologies or functions described herein, including those methods illustrated above. The computer-readable storage medium **722** can be an electromechanical medium such as a common disk drive, or a mass storage medium with no moving parts such as Flash or like non-volatile memories. The instructions **724** may also reside, completely or at least partially, within the main memory **704**, the static memory **706**, and/or within the processor **702** during execution thereof by the computer system **700**. The main memory **704** and the processor **702** also may constitute computer-readable storage media.

[0054] Dedicated hardware implementations including, but not limited to, application specific integrated circuits, programmable logic arrays and other hardware devices can likewise be constructed to implement the methods described herein. Applications that may include the apparatus and systems of various embodiments broadly include a variety of electronic and computer systems. Some embodiments implement functions in two or more specific interconnected hardware modules or devices with related control and data signals communicated between and through the modules, or as portions of an application-specific integrated circuit. Thus, the example system is applicable to software, firmware, and hardware implementations.

[0055] In accordance with various embodiments of the present disclosure, the methods described herein are intended for operation as software programs running on a computer processor. Furthermore, software implementations can include, but not limited to, distributed processing or component/object distributed processing, parallel processing, or virtual machine processing can also be constructed to implement the methods described herein.

[0056] The present disclosure contemplates a machine readable medium containing instructions **724**, or that which receives and executes instructions **724** from a propagated signal so that a device connected to a network environment **726** can send or receive voice, video or data, and to communicate over the network **726** using the instructions **724**. The instructions **724** may further be transmitted or received over a network **726** via the network interface device **720**.

[0057] While the computer-readable storage medium **722** is shown in an example embodiment to be a single medium, the term "computer-readable storage medium" should be taken to include a single medium or multiple media (e.g., a centralized or distributed database, and/or associated caches and servers) that store the one or more sets of instructions. The term "computer-readable storage medium" shall also be taken to include any medium that is capable of storing, encoding or carrying a set of instructions for execution by the machine and that cause the machine to perform any one or more of the methodologies of the present disclosure.

[0058] The term "computer-readable storage medium" shall accordingly be taken to include, but not be limited to: solid-state memories such as a memory card or other package that houses one or more read-only (non-volatile) memories, random access memories, or other re-writable (volatile) memories; magneto-optical or optical medium such as a disk or tape; and carrier wave signals such as a signal embodying computer instructions in a transmission medium; and/or a digital file attachment to e-mail or other self-contained information archive or set of archives is considered a distribution medium equivalent to a tangible storage medium. Accordingly, the disclosure is considered to include any one or more of a computer-readable storage medium or a distribution medium, as listed herein and including art-recognized equivalents and successor media, in which the software implementations herein are stored.

[0059] Although the present specification describes components and functions implemented in the embodiments with reference to particular standards and protocols, the disclosure is not limited to such standards and protocols. Each of the standards for cellular communications (SM-GPRS, EDGE, CDMA-1X, UMTS, WiMAX, SDR) and other packet switched network transmission (e.g., TCP/IP, UDP/IP, HTML, HTTP) represent examples of the state of the art. Such standards are periodically superseded by faster or more efficient equivalents having essentially the same functions. Accordingly, replacement standards and protocols having the same functions are considered equivalents.

[0060] The illustrations of embodiments described herein are intended to provide a general understanding of the structure of various embodiments, and they are not intended to serve as a complete description of all the elements and features of apparatus and systems that might make use of the structures described herein. Many other embodiments will be apparent to those of skill in the art upon reviewing the above description. Other embodiments may be utilized and derived therefrom, such that structural and logical substitutions and changes may be made without departing from the scope of this disclosure. Figures are also merely representational and may not be drawn to scale. Certain proportions thereof may be exaggerated, while others may be minimized. Accordingly, the specification and drawings are to be regarded in an illustrative rather than a restrictive sense.

[0061] Such embodiments of the inventive subject matter may be referred to herein, individually and/or collectively, by the term "invention" merely for convenience and without intending to voluntarily limit the scope of this application to any single invention or inventive concept if more than one is in fact disclosed. Thus, although specific embodiments have been illustrated and described herein, it should be appreciated that any arrangement calculated to achieve the same purpose may be substituted for the specific embodiments shown. This disclosure is intended to cover any and all adaptations or variations of various embodiments. Combinations of the above embodiments, and other embodiments not specifically described herein, will be apparent to those of skill in the art upon reviewing the above description.

[0062] The Abstract of the Disclosure is provided to comply with 37 C.F.R. §1.72(b), requiring an abstract that will allow the reader to quickly ascertain the nature of the technical disclosure. It is submitted with the understanding that it will not be used to interpret or limit the scope or meaning of the claims. In addition, in the foregoing Detailed Description, it can be seen that various features are grouped together in a single embodiment for the purpose of streamlining the disclosure. This method of disclosure is not to be interpreted as reflecting an intention that the claimed embodiments require more features than are expressly recited in each claim. Rather, as the following claims reflect, inventive subject matter lies in less than all features of a single disclosed embodiment. Thus the following claims are hereby incorporated into the Detailed Description, with each claim standing on its own as a separately claimed subject matter.

What is claimed is:

1. A computer readable storage medium, comprising computer instructions for:

providing information associated with an Elliptic Curve Diffie-Hellman (ECDH) cryptosystem to a group of Mobile Stations (MSs) using a base transceiver station;

authenticating a first MS of the group of MSs using a first Visitor Location Register (VLR) of a Mobile Switching Center (MSC) and authenticating a second MS of the group of MSs with a second VLR of the MSC;

sending a first certificate of the first MS from the first VLR to the second VLR and sending a second certificate of the second MS from the second VLR to the first VLR; and

sending the first certificate from the second VLR to the second MS and sending the second certificate from the first VLR to the first MS, wherein data communicated between the first MS and the second MS is encrypted with a secret key computed individually by both the first MS and the second MS from the first certificate and the second certificate, respectively.

2. The storage medium claim **1**, wherein the information associated with the ECDH cryptosystem is provided to the base transceiver station using a first mode of communication, and wherein the information associated with the ECDH cryptosystem is provided to the group of Mobile Stations (MSs) using a second mode of communication.

3. The storage medium claim **1**, wherein at least one of the first VLR and the second VLR generates a random number RAND, encrypts the random number using the secret key, and sends the encrypted random number to at least one of the first MS and the second MS.

4. A network element comprising a controller to establish connectivity between at least two Mobile Stations (MSs) that are implementing a key exchange algorithm with a Mobile Switching Center (MSC), wherein the at least two MSs each compute their own secret keys using the key exchange algorithm individually with their own private keys, wherein the at least two MSs encrypt data transmitted by the network element with their own secret keys, and wherein the at least two MSs communicate with each other using the encrypted data.

5. The network element of claim **4**, wherein the key exchange algorithm is an Elliptic Curve Diffie-Hellman cryptosystem that provides public key and private key generation.

6. The network element of claim **4**, wherein at least one MS of the at least two MSs includes an identity module storing information associated with the key exchange algorithm.

7. The network element of claim **4**, wherein the MSC includes an authentication center, a Home Location Register or a Visitor Location Register implementing the key exchange algorithm.

8. The network element of claim **4**, wherein at least one MS of the at least two MSs communicates with the network element over a Radio Frequency (RF) link, and the MSC communicates with the network element over a signaling link, both the RF link and the signaling link providing secure encryption between the at least two MSs.

9. The network element of claim **4**, wherein the MSC supports communication access over at least one among Global Systems Mobile, Code Division Multiple Access, Orthogonal Frequency Division Multiple Access and Universal Mobile Telecommunication System.

10. A server comprising a controller to implement an Elliptic Curve Diffie-Hellman (ECDH) cryptosystem and manage a key exchange, authentication, and certificate exchange with a communication device also implementing the ECDH cryptosystem, wherein the server communicates over a network that provides an encrypted communication link for the communication device.

11. The server of claim **10**, wherein the controller is adapted to compute an authentication key using its own private key, send the authentication key to the communication device, generate a random number, encrypts the random number with the authentication key, and send the encrypted random number to the communication device.

12. The server of claim **10**, wherein communication device generates a signed response that is sent back to the controller, and the controller authenticates the communication device on the network if the signed response received from the communication device matches its own computed signed response.

13. The server of claim **12**, wherein the authentication key is created dynamically for authentication, such that it is not stored in a database associated with the communication device or a Mobile Switching Center (MSC) associated with the server.

14. The server of claim **13**, wherein the MSC includes an authentication center (AuC), a Home Location Register (HLR), or a Visitor Location Register (VLR) implementing the Elliptic Curve Diffie-Hellman (ECDH) cryptosystem.

15. A method comprising: implementing an Elliptic Curve Diffie-Hellman (ECDH) cryptosystem on at least two Mobile Stations (MSs) and a Mobile Switching Center (MSC), wherein each of the at least two MSs produces its own secret key used for data encryption from its own respective private keys during a key exchange; and providing an encrypted communication link between the at least two MSs using the ECDH cryptosystem.

16. The method of claim **15**, comprising replacing A3, A5, and A8 GSM ciphering algorithms with the Elliptic Curve Diffie-Hellman (ECDH) cryptosystem in both the at least two MSs and the MSC.

17. The method of claim **15**, comprising:

authenticating a first Mobile Station (MS) of the at least two MSs with a first VLR of the MSC and authenticating a second MS of the at least two MSs with a second VLR of the MSC;

sending a first certificate of the first MS from the first VLR to the second VLR and sending a second certificate of the second MS from the second VLR to the first VLR;

sending the first certificate from the second VLR to the second MS and sending the second certificate from the first VLR to the first MS; and

encrypting data communicated between the first MS and the second MS with a secret key computed individually by both the first MS and the second MS from the first certificate and the second certificate, respectively.

18. The method of claim **17**, wherein the first MS uses its own private key P_**1** to compute its own public key Q_**1** using a chosen base point B on an Elliptic Curve algorithm Q=P_**1***B_**1**, and sends its public key Q_**1** to the first VLR that computes its own public key Q_VLR**1** using its own private key P_VLR**1** and sends its own public key Q_VLR**1** to the first MS.

19. The method of claim **18**, wherein the first MS computes a shared authentication key A_**1** from its own private key P_**1** and the public key Q_VLR**1** received from the first VLR, and the first VLR computes the shared authentication key A_**1** from its own private key P_VLR**1** and the public key Q_**1** received from the MS.

20. The method of claim **19**, wherein the first VLR generates a random number RAND, encrypts the random number with the shared authentication key A_**1** to produce an encrypted random number, and sends the encrypted random number to the first MS, and the first MS decrypts the encrypted random number using its shared authentication key A_**1** to produce the RAND.

21. The method of claim **20**, wherein the first MS applies a message digest algorithm SHA to the random number RAND to produce a signed response SRES, and sends the signed response SRES to the first VLR, and the first VLR carries out its own computation of the signed response SRES using the message digest algorithm SHA, and authenticates the first MS if its own computation of the signed response SRES matches the signed response SRES from the first MS.

22. The method of claim **17**, wherein

the first VLR creates a first certificate that contains a public key P_**1** of the first MS, and sends the first certificate to the second VLR which sends the first certificate to the second MS, and

the second VLR creates a second certificate that contains a public key P_**2** of the second MS, and sends the second certificate to the first VLR which sends the second certificate to the first MS.

23. The method of claim **20**, wherein

the first MS extracts the public key P_**2** of the second MS from the second certificate and computes its own secret key;

the second MS extracts the public key P_**1** of the first MS from the first certificate and computes its own secret key;

and the first MS and the second MS encrypt data exchanged between the first MS and the second MS individually each using their own secret key.

* * * * *