US012166869B2

(12) **United States Patent**
Nix

(10) **Patent No.: US 12,166,869 B2**
(45) **Date of Patent: *Dec. 10, 2024**

(54) **KEY DERIVATION FOR A MODULE USING AN EMBEDDED UNIVERSAL INTEGRATED CIRCUIT CARD**

(71) Applicant: **Network-1 Technologies, Inc.**, New York, NY (US)

(72) Inventor: **John A. Nix**, Evanston, IL (US)

(73) Assignee: **Network-1 Technologies, Inc.**, New York, NY (US)

(*) Notice: Subject to any disclaimer, the term of this patent is extended or adjusted under 35 U.S.C. 154(b) by 0 days.

This patent is subject to a terminal disclaimer.

(21) Appl. No.: **18/229,907**

(22) Filed: **Aug. 3, 2023**

(65) **Prior Publication Data**

US 2023/0379148 A1 Nov. 23, 2023

Related U.S. Application Data

(63) Continuation of application No. 17/304,922, filed on Jun. 28, 2021, now Pat. No. 11,736,283, which is a

(Continued)

(51) **Int. Cl.**
H04L 9/08 (2006.01)
G06F 21/33 (2013.01)

(Continued)

(52) **U.S. Cl.**
CPC ***H04L 9/0861*** (2013.01); ***G06F 21/33*** (2013.01); ***G06F 21/35*** (2013.01); ***H04J 11/00*** (2013.01);

(Continued)

(58) **Field of Classification Search**
CPC H04L 9/0861; H04L 9/006; H04L 9/0662; H04L 9/0816; H04L 9/0841;

(Continued)

(56) **References Cited**

U.S. PATENT DOCUMENTS

5,216,715 A * 6/1993 Markwitz H04L 9/321 713/181
5,642,420 A * 6/1997 Kuroda H04L 9/40 380/30

(Continued)

FOREIGN PATENT DOCUMENTS

CA 3110641 A1 10/2019
CA 3110468 A1 11/2019

(Continued)

OTHER PUBLICATIONS

U.S. Appl. No. 18/229,907, filed Aug. 3, 2023, (Present Application) Pending—Case Docketed to Examiner.

(Continued)

Primary Examiner — David Garcia Cervetti
(74) *Attorney, Agent, or Firm* — Amster, Rothstein & Ebenstein LLP

(57) **ABSTRACT**

A module with an embedded universal integrated circuit card (eUICC) can include a received eUICC profile and a set of cryptographic algorithms. The received eUICC profile can include an initial shared secret key for authentication with a wireless network. The module can receive a key K network token and send a key K module token to the wireless network. The module can use the key K network token, a derived module private key, and a key derivation function to derive a secret shared network key K that supports communication with the wireless network. The wireless network can use the received key K module token, a network private key, and the key derivation function in order to derive the same secret shared network key K derived by the module. The module and the wireless network can subsequently use the mutually derived key K to communicate using traditional wireless network standards.

20 Claims, 19 Drawing Sheets

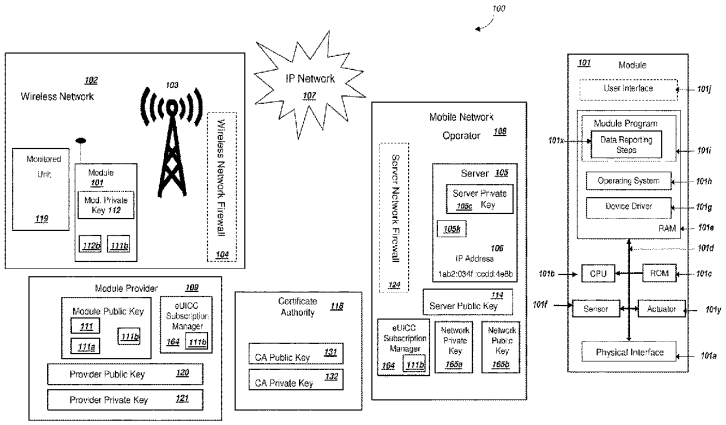

Related U.S. Application Data

continuation of application No. 16/879,325, filed on May 20, 2020, now Pat. No. 11,082,218, which is a continuation of application No. 16/201,401, filed on Nov. 27, 2018, now Pat. No. 10,700,856, which is a continuation of application No. 15/680,758, filed on Aug. 18, 2017, now Pat. No. 10,187,206, which is a continuation of application No. 15/130,146, filed on Apr. 15, 2016, now Pat. No. 9,742,562, which is a continuation of application No. 14/084,141, filed on Nov. 19, 2013, now Pat. No. 9,319,223.

(51) **Int. Cl.**

G06F 21/35	(2013.01)
H04J 11/00	(2006.01)
H04L 9/00	(2022.01)
H04L 9/06	(2006.01)
H04L 9/14	(2006.01)
H04L 9/30	(2006.01)
H04L 9/32	(2006.01)
H04L 9/40	(2022.01)
H04L 12/28	(2006.01)
H04L 67/04	(2022.01)
H04W 4/70	(2018.01)
H04W 8/08	(2009.01)
H04W 12/02	(2009.01)
H04W 12/03	(2021.01)
H04W 12/04	(2021.01)
H04W 12/041	(2021.01)
H04W 12/06	(2021.01)
H04W 40/00	(2009.01)
H04W 52/02	(2009.01)
H04W 76/27	(2018.01)
H04W 80/04	(2009.01)
H04W 84/12	(2009.01)
H04W 88/12	(2009.01)

(52) **U.S. Cl.**

CPC ***H04L 9/006*** (2013.01); ***H04L 9/0662*** (2013.01); ***H04L 9/0816*** (2013.01); ***H04L 9/0841*** (2013.01); ***H04L 9/0844*** (2013.01); ***H04L 9/085*** (2013.01); ***H04L 9/088*** (2013.01); ***H04L 9/0891*** (2013.01); ***H04L 9/0894*** (2013.01); ***H04L 9/14*** (2013.01); ***H04L 9/30*** (2013.01); ***H04L 9/3066*** (2013.01); ***H04L 9/32*** (2013.01); ***H04L 9/321*** (2013.01); ***H04L 9/3239*** (2013.01); ***H04L 9/3247*** (2013.01); ***H04L 9/3249*** (2013.01); ***H04L 9/3263*** (2013.01); ***H04L 12/2854*** (2013.01); ***H04L 63/0272*** (2013.01); ***H04L 63/0435*** (2013.01); ***H04L 63/0442*** (2013.01); ***H04L 63/045*** (2013.01); ***H04L 63/06*** (2013.01); ***H04L 63/061*** (2013.01); ***H04L 63/0807*** (2013.01); ***H04L 63/123*** (2013.01); ***H04L 63/166*** (2013.01); ***H04L 67/04*** (2013.01); ***H04W 4/70*** (2018.02); ***H04W 8/082*** (2013.01); ***H04W 12/02*** (2013.01); ***H04W 12/03*** (2021.01); ***H04W 12/04*** (2013.01); ***H04W 12/041*** (2021.01); ***H04W 12/06*** (2013.01); ***H04W 40/005*** (2013.01); ***H04W 52/0216*** (2013.01); ***H04W 52/0235*** (2013.01); ***H04W 52/0277*** (2013.01); ***H04W 76/27*** (2018.02); ***H04W 80/04*** (2013.01); *G06F 2221/2105* (2013.01); *G06F 2221/2107* (2013.01); *G06F 2221/2115* (2013.01); *H04L 63/0464* (2013.01); *H04L 2209/24* (2013.01); *H04L 2209/56* (2013.01); *H04L 2209/72* (2013.01); *H04L 2209/80* (2013.01); *H04L 2209/805* (2013.01); *H04W 84/12* (2013.01); *H04W 88/12* (2013.01); *Y02D 30/70* (2020.08)

(58) **Field of Classification Search**

CPC H04L 9/0844; H04L 9/085; H04L 9/088; H04L 9/0891; H04L 9/0894; H04L 9/14; H04L 9/30; H04L 9/3239; H04L 9/3247; H04L 9/3249; H04L 9/3263; H04L 63/061; H04L 63/0442; H04W 12/03; H04W 12/041; H04W 12/06

See application file for complete search history.

(56) **References Cited**

U.S. PATENT DOCUMENTS

5,664,017	A *	9/1997	Gressel	H04L 9/0833	380/30
5,852,665	A *	12/1998	Gressel	H04L 9/0894	380/45
5,995,625	A *	11/1999	Sudia	G06F 21/6209	713/181
6,256,733	B1 *	7/2001	Thakkar	H04L 63/065	380/279
6,721,886	B1 *	4/2004	Uskela	H04L 9/3271	713/168
6,804,357	B1 *	10/2004	Ikonen	H04N 21/42204	348/14.05
6,842,628	B1 *	1/2005	Arnold	H04L 51/224	713/181
7,715,822	B2 *	5/2010	Semple	H04L 63/0853	455/433
8,352,739	B2 *	1/2013	Park	H04L 63/06	713/169
8,452,017	B2 *	5/2013	Sherkin	H04L 9/0844	713/168
8,577,337	B2 *	11/2013	O'Leary	H04W 12/068	455/410
8,874,915	B1 *	10/2014	Rodoper	H04L 9/0838	380/278
8,887,257	B2 *	11/2014	Haggerty	H04W 12/04	726/9
8,965,366	B1 *	2/2015	Somayajula	H04W 60/00	455/418
9,020,479	B1 *	4/2015	Somayajula	H04W 48/18	455/418
9,037,112	B2 *	5/2015	Rajadurai	H04W 12/35	713/168
9,247,424	B2 *	1/2016	Haggerty	H04L 63/10	
9,270,653	B2 *	2/2016	Maria	H04L 63/062	
9,332,129	B2 *	5/2016	Li	H04W 4/50	
9,426,654	B2 *	8/2016	Lee	H04L 63/0853	
9,451,459	B2 *	9/2016	Lee	H04W 12/35	
9,572,016	B2 *	2/2017	Cormier	H04W 8/183	
9,628,981	B2 *	4/2017	Park	H04W 8/205	
9,674,690	B2 *	6/2017	Lee	H04W 8/183	
9,712,996	B2 *	7/2017	Park	H04W 12/04	
9,794,775	B2 *	10/2017	Huber	H04W 8/265	
9,800,993	B2 *	10/2017	Lee	H04W 12/126	
9,807,605	B2 *	10/2017	Gao	H04L 63/0428	
9,843,585	B2 *	12/2017	Haggerty	H04W 12/06	
9,923,724	B2 *	3/2018	Lee	H04L 9/0825	
10,091,653	B2 *	10/2018	Lee	H04W 12/06	
10,169,587	B1	1/2019	Nix		
10,462,668	B2 *	10/2019	Lee	H04L 63/0823	
10,621,352	B2	4/2020	NIx		
10,743,176	B1 *	8/2020	Khan	H04W 12/48	
11,258,595	B2 *	2/2022	Nix	H04W 12/04	
11,281,813	B1 *	3/2022	Morgan	G06F 21/72	
2004/0146015	A1 *	7/2004	Cross	H04L 9/0894	370/328
2005/0058294	A1 *	3/2005	Chen	H04L 9/0847	380/277

(56) **References Cited**

U.S. PATENT DOCUMENTS

2005/0246529 A1* 11/2005 Hunt H04L 9/3263 713/168
2006/0021063 A1 1/2006 Hori
2006/0034494 A1* 2/2006 Holloran H04L 9/3231 382/116
2006/0129848 A1* 6/2006 Paksoy G06F 21/35 713/193
2006/0179309 A1* 8/2006 Cross G06F 21/6281 713/168
2006/0235795 A1* 10/2006 Johnson G06Q 20/02 705/26.1
2006/0235796 A1* 10/2006 Johnson G06Q 20/12 705/26.1
2007/0050622 A1* 3/2007 Rager G06F 21/445 713/168
2007/0241182 A1* 10/2007 Buer H04L 63/0853 235/380
2008/0044032 A1* 2/2008 Lou H04L 65/40 380/284
2008/0130879 A1* 6/2008 Heinonen H04L 9/006 380/44
2008/0170697 A1* 7/2008 Heinonen H04L 63/0823 380/277
2008/0260149 A1* 10/2008 Gehrmann G06Q 20/3821 380/247
2008/0288773 A1* 11/2008 Nguyen H04L 9/321 713/155
2010/0093347 A1 4/2010 Hahn et al.
2010/0174907 A1* 7/2010 Semple H04W 12/0431 713/169
2011/0035604 A1* 2/2011 Habraken G07F 7/1016 235/382
2011/0158411 A1 6/2011 Medvinsky et al.
2011/0167272 A1 7/2011 Kolesnikov
2011/0213959 A1* 9/2011 Bodi H04W 12/06 713/155
2011/0268022 A1* 11/2011 Xu H04Q 3/0025 370/328
2011/0269422 A1* 11/2011 Xu H04M 17/20 455/411
2011/0269461 A1* 11/2011 Xu H04W 8/183 455/435.2
2011/0269472 A1* 11/2011 Xu H04W 40/02 455/445
2011/0270747 A1* 11/2011 Xu H04M 15/67 705/40
2012/0011362 A1* 1/2012 Lambert H04L 9/0844 713/168
2012/0023568 A1* 1/2012 Cha H04L 63/0807 726/10
2012/0028608 A1* 2/2012 Su H04W 12/08 455/411
2012/0072979 A1* 3/2012 Cha H04W 12/069 726/8
2012/0084565 A1* 4/2012 Wittenberg H04L 9/3226 713/172
2012/0087493 A1* 4/2012 Chidambaram H04L 9/0841 713/182
2012/0190354 A1* 7/2012 Merrien H04L 63/083 455/422.1
2012/0263298 A1* 10/2012 Suh H04W 4/50 380/255
2012/0284194 A1* 11/2012 Liu G07F 7/08 705/66
2013/0012168 A1* 1/2013 Rajadurai H04W 12/04 455/411
2013/0067552 A1* 3/2013 Hawkes H04W 12/08 726/7
2013/0122864 A1* 5/2013 Haggerty G06F 21/34 455/411
2013/0157673 A1* 6/2013 Brusilovsky H04W 12/02 455/450
2013/0159710 A1* 6/2013 Khan H04L 9/0891 713/168
2013/0227646 A1* 8/2013 Haggerty H04L 63/10 726/3
2013/0283047 A1* 10/2013 Merrien H04L 67/306 713/164
2013/0290714 A1* 10/2013 Hans H04L 9/3273 713/168
2013/0294602 A1* 11/2013 Huxham H04L 63/0853 380/255
2013/0301828 A1* 11/2013 Gouget H04L 9/0844 380/44
2013/0340040 A1* 12/2013 Park H04L 63/08 726/3
2013/0344864 A1* 12/2013 Park H04W 8/18 455/432.3
2014/0003604 A1* 1/2014 Campagna H04W 12/069 380/247
2014/0004824 A1* 1/2014 Campagna H04L 9/0866 455/411
2014/0006786 A1* 1/2014 Campagna H04W 12/04 713/171
2014/0032898 A1* 1/2014 Yu H04N 21/4181 713/159
2014/0082358 A1* 3/2014 Nakhjiri H04L 9/0822 713/168
2014/0082359 A1* 3/2014 Nakhjiri H04L 9/3066 713/168
2014/0120874 A1* 5/2014 Kang H04W 12/069 455/411
2014/0140507 A1* 5/2014 Park H04W 8/183 380/247
2014/0219447 A1* 8/2014 Park H04W 12/35 380/247
2014/0219448 A1* 8/2014 Froels H04L 9/14 380/255
2014/0235210 A1* 8/2014 Park H04W 12/35 455/411
2014/0237101 A1* 8/2014 Park H04W 8/205 709/223
2014/0287725 A1* 9/2014 Lee H04W 12/35 455/411
2014/0308991 A1* 10/2014 Lee H04W 12/35 455/558
2014/0329502 A1* 11/2014 Lee H04W 12/04 455/411
2014/0357229 A1* 12/2014 Lee H04W 8/245 455/411
2015/0058632 A1* 2/2015 Beyer H04L 65/1073 713/171
2015/0121495 A1* 4/2015 Gao H04W 12/04 726/6
2015/0126153 A1* 5/2015 Spitz H04W 12/06 455/26.1
2015/0143125 A1* 5/2015 Nix H04L 9/3066 713/171
2015/0163209 A1* 6/2015 Kawamoto H04L 63/08 726/6
2015/0281964 A1* 10/2015 Seo H04W 8/183 726/9
2015/0350881 A1* 12/2015 Weiss H04W 12/04 455/558
2016/0034707 A1* 2/2016 Sahu H04L 9/0866 713/168
2016/0057725 A1* 2/2016 Suh H04W 60/06 455/435.1
2016/0088096 A1* 3/2016 Quiriconi H04W 4/50 709/219
2016/0127132 A1* 5/2016 Lee H04L 9/0819 713/156
2016/0149903 A1* 5/2016 Suh H04L 63/0428 713/156
2016/0226877 A1* 8/2016 Haggerty H04W 8/183
2016/0330624 A1* 11/2016 Lee H04L 63/0853
2017/0289792 A1* 10/2017 Park H04L 67/306
2017/0338954 A1* 11/2017 Yang H04W 12/35

(56) **References Cited**

U.S. PATENT DOCUMENTS

2018/0123803	A1*	5/2018	Park	H04L 9/14
2018/0144147	A1*	5/2018	Nix	H04W 12/35
2018/0176223	A1*	6/2018	Hutchinson	H04L 9/16
2018/0242153	A1*	8/2018	Lee	H04L 63/0853
2018/0276358	A1*	9/2018	Sawamura	G06K 19/07
2018/0351945	A1*	12/2018	Li	H04W 8/205
2019/0097794	A1*	3/2019	Nix	H04L 9/3249
2019/0140837	A1*	5/2019	Cheng	H04W 8/20
2019/0190723	A1*	6/2019	Lee	H04L 9/3231
2019/0208417	A1*	7/2019	Kang	H04W 12/35
2019/0230087	A1*	7/2019	Gharout	H04W 12/35
2019/0313246	A1	10/2019	Nix	
2019/0332774	A1	10/2019	Nix	
2019/0356482	A1	11/2019	Nix	
2019/0373471	A1*	12/2019	Li	H04L 9/3247
2019/0394053	A1*	12/2019	Yu	H04W 12/041
2020/0021993	A1*	1/2020	Yang	H04L 63/123
2020/0089488	A1*	3/2020	Yu	G06F 16/148
2020/0137572	A1*	4/2020	Lee	H04W 12/35
2020/0162247	A1	5/2020	Nix	
2020/0162269	A1*	5/2020	Nix	H04L 9/14
2020/0226258	A1	7/2020	Nix	
2020/0280436	A1	9/2020	Nix	
2020/0351656	A1*	11/2020	Johansson	H04W 4/70
2021/0126801	A1	4/2021	Nix	
2021/0144551	A1*	5/2021	Lee	H04W 12/043
2021/0152359	A1*	5/2021	Kim	H04L 9/0819
2021/0184842	A1	6/2021	Nix	
2021/0194681	A1	6/2021	Nix	
2021/0203488	A1*	7/2021	Ståhl	H04L 9/0631
2021/0211279	A1	7/2021	Nix	
2021/0218560	A1	7/2021	Nix	
2021/0226781	A1*	7/2021	Arkko	H04L 9/085
2021/0314148	A1*	10/2021	Yang	H04L 9/0822
2022/0046409	A1*	2/2022	Lim	H04W 12/40
2022/0095095	A1*	3/2022	Lim	H04W 8/24
2022/0295288	A1*	9/2022	Stahl	H04L 67/303
2024/0022397	A1*	1/2024	Naito	G06F 21/6209
2024/0022404	A1*	1/2024	Nepstad	H04L 9/50

FOREIGN PATENT DOCUMENTS

DE	19803936	A1	8/1999
EP	3766222	A1	1/2021
GB	2518976	A	4/2015
KR	20130026351	A	3/2013
WO	2013/048084	A2	4/2013
WO	2019178312	A1	9/2019
WO	2019209598	A1	10/2019
WO	2019222319	A1	11/2019
WO	2019246206	A1	12/2019
WO	2020006162	A1	1/2020
WO	2020061023	A1	3/2020
WO	2020123959	A1	6/2020
WO	2020223319	A1	11/2020
WO	2021007235	A1	1/2021
WO	2021087221	A1	5/2021

OTHER PUBLICATIONS

U.S. Appl. No. 18/111,669, filed Feb. 20, 2023, Non-Final OA mailed Oct. 2, 2023.
U.S. Appl. No. 17/647,812, filed Jan. 13, 2022, U.S. Pat. No. 11,606,204.
U.S. Appl. No. 17/547,990, filed Dec. 10, 2021, U.S. Pat. No. 11,736,283.
U.S. Appl. No. 17/304,922, filed Jun. 28, 2021, U.S. Pat. No. 11,763,283.
U.S. Appl. No. 17/249,242, filed Feb. 24, 2021, Response to Non-Final OA filed Nov. 13, 2023.
U.S. Appl. No. 16/879,325, filed May 20, 2020, U.S. Pat. No. 11,082,218.
U.S. Appl. No. 16/843,107, filed Apr. 8, 2020, U.S. Pat. No. 11,283,603.
U.S. Appl. No. 16/721,153, filed Dec. 19, 2019, U.S. Pat. No. 11,539,681.
U.S. Appl. No. 16/593,561, filed Oct. 4, 2019, U.S. Pat. No. 11,258,595.
U.S. Appl. No. 16/453,682, filed Jun. 26, 2019, U.S. Pat. No. 11,233,780.
U.S. Appl. No. 16/271,455, filed Feb. 8, 2019, U.S. Pat. No. 10,594,679.
U.S. Appl. No. 16/271,428, filed Feb. 8, 2019, U.S. Pat. No. 10,523,432.
U.S. Appl. No. 16/201,401, filed Nov. 27, 2018, U.S. Pat. No. 10,700,856.
U.S. Appl. No. 16/200,118, filed Nov. 26, 2018, U.S. Pat. No. 10,498,530.
U.S. Appl. No. 16/110,804, filed Aug. 23, 2018, U.S. Pat. No. 10,382,422.
U.S. Appl. No. 16/036,506, filed Jul. 16, 2018, U.S. Pat. No. 10,530,575.
U.S. Appl. No. 15/983,957, filed May 18, 2018, U.S. Pat. No. 10,177,911.
U.S. Appl. No. 15/973,012, filed May 7, 2018, U.S. Pat. No. 10,250,386.
U.S. Appl. No. 15/972,914, filed May 7, 2018, U.S. Pat. No. 10,652,017.
U.S. Appl. No. 15/928,848, filed Mar. 22, 2018, U.S. Pat. No. 10,084,768.
U.S. Appl. No. 15/010,905, filed Jan. 29, 2016, U.S. Pat. No. 9,641,327.
U.S. Appl. No. 15/680,758, filed Aug. 18, 2017, U.S. Pat. No. 10,187,206.
U.S. Appl. No. 15/162,292, filed May 23, 2016, U.S. Pat. No. 10,362,012.
U.S. Appl. No. 14/751,119, filed Jun. 25, 2015, U.S. Pat. No. 9,961,060.
U.S. Appl. No. 15/457,700, filed Mar. 13, 2017, U.S. Pat. No. 9,998,281.
U.S. Appl. No. 15/583,968, filed May 1, 2017, U.S. Pat. No. 10,057,059.
U.S. Appl. No. 15/043,293, filed Feb. 12, 2016, U.S. Pat. No. 9,998,280.
U.S. Appl. No. 15/642,088, filed Jul. 5, 2017, U.S. Pat. No. 10,003,461.
U.S. Appl. No. 15/130,146, filed Apr. 15, 2016, U.S. Pat. No. 9,742,562.
U.S. Appl. No. 15/162,302, filed May 23, 2016, U.S. Pat. No. 9,698,981.
U.S. Appl. No. 14/789,255, filed Jul. 1, 2015, U.S. Pat. No. 9,596,078.
U.S. Appl. No. 14/139,419, filed Dec. 23, 2013, U.S. Pat. No. 9,351,162.
U.S. Appl. No. 14/136,711, filed Dec. 20, 2013, U.S. Pat. No. 9,300,473.
U.S. Appl. No. 14/099,329, filed Dec. 6, 2013, U.S. Pat. No. 9,100,175.
U.S. Appl. No. 14/084,141, filed Nov. 19, 2013, U.S. Pat. No. 9,319,223.
U.S. Appl. No. 14/064,618, filed Oct. 28, 2013, U.S. Pat. No. 9,118,464.
U.S. Appl. No. 14/055,606, filed Oct. 16, 2013, U.S. Pat. No. 9,276,740.
U.S. Appl. No. 14/039,401, filed Sep. 27, 2013, U.S. Pat. No. 9,288,059.
U.S. Appl. No. 14/023,181, filed Sep. 10, 2013, U.S. Pat. No. 9,350,550.
AU 2019246774, Oct. 8, 2019, AU2019246774A1 Issued Sep. 23, 2021.
GB 1608573, Oct. 27, 2014, Published on Aug. 3, 2016.
GB 2100530, Oct. 27, 2014, Published May 12, 2021.
CA 2,965,119, Oct. 27, 2014, Published May 7, 2015.
HK 17101082.8, Oct. 27, 2014, Published on OCt. 20, 2017.
EU 14868381.6, Dec. 4, 2014, Published on Jan. 4, 2017.

(56) **References Cited**

OTHER PUBLICATIONS

CA 2,969,829, Dec. 4, 2014, Published on Jun. 11, 2015.
HK 17106540.3, Dec. 4, 2014, Published on Jan. 19, 2018.
Search Report issued in UK Application No. GB2108534.5 dated Jul. 7, 2021.
European Patent Office Communication with European Search Report and European Search Opinion issued in EP 21182424.8 dated Oct. 12, 2021.
European Patent Office Communication with European Search Report and European Search Opinion issued in EP 21182451.1 dated Oct. 12, 2021.
European Patent Office Communication with European Search Report and European Search Opinion issued in EP 21182432.1 dated Oct. 12, 2021.
TLS 1.3 Wish List Presentation, IETF 87 (Eric Rescorla), dated Aug. 1, 2013.

* cited by examiner

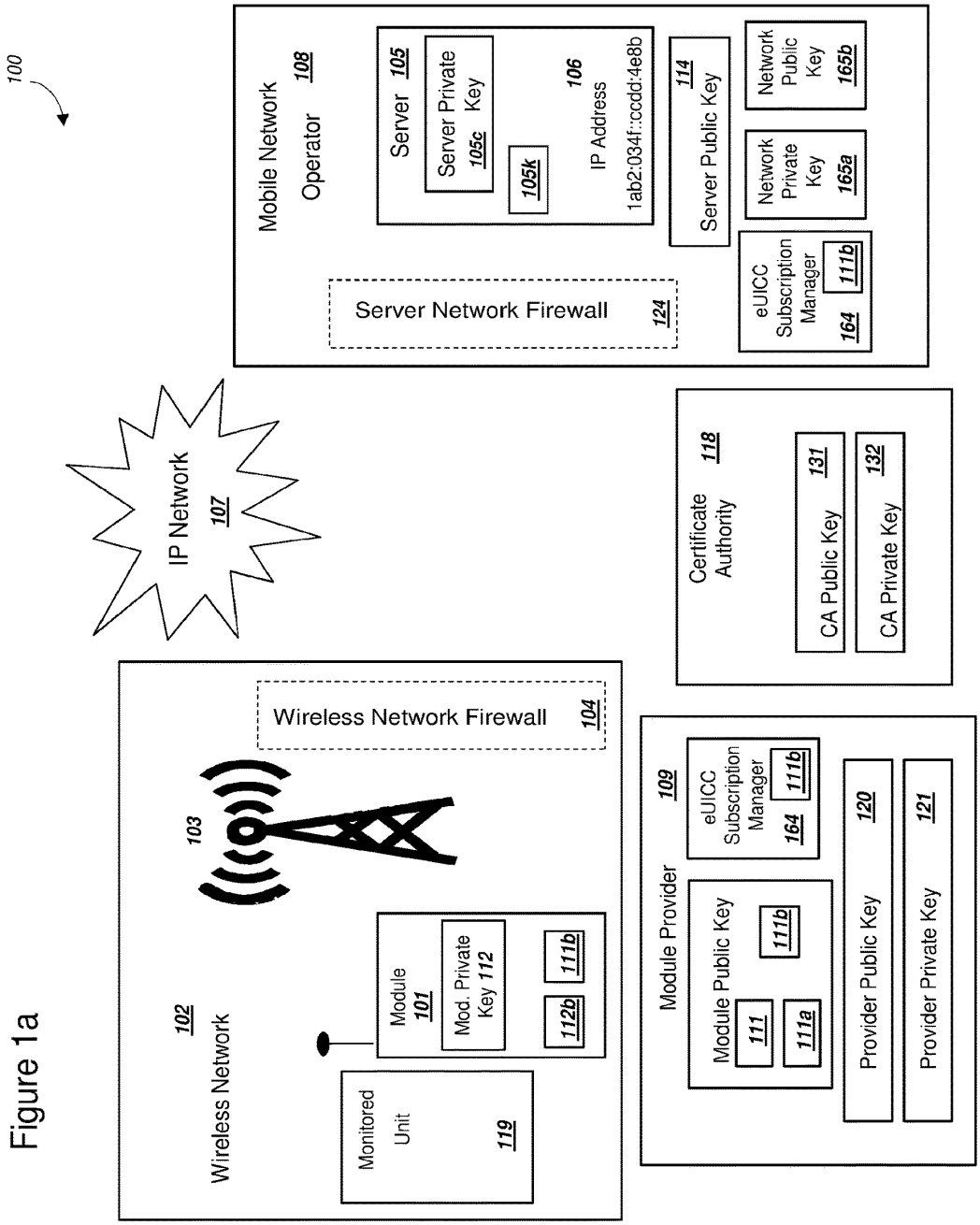
100
Mobile Network Operator 108
Server 105
Server Private Key 105c
105k
106
IP Address
1ab2:034f::ccdd:4e8b
114
Server Public Key
Network Public Key 165b
Network Private Key 165a
eUICC Subscription Manager 164
111b
Server Network Firewall 124
IP Network 107
Certificate Authority 118
CA Public Key 131
CA Private Key 132
Wireless Network Firewall 104
103
102
Wireless Network
Module 101
Mod. Private Key 112
112b
111b
Monitored Unit 119
Module Provider 109
eUICC Subscription Manager 164
111b
Module Public Key
111
111a
Provider Public Key 120
Provider Private Key 121

Figure 1a

Figure 1c

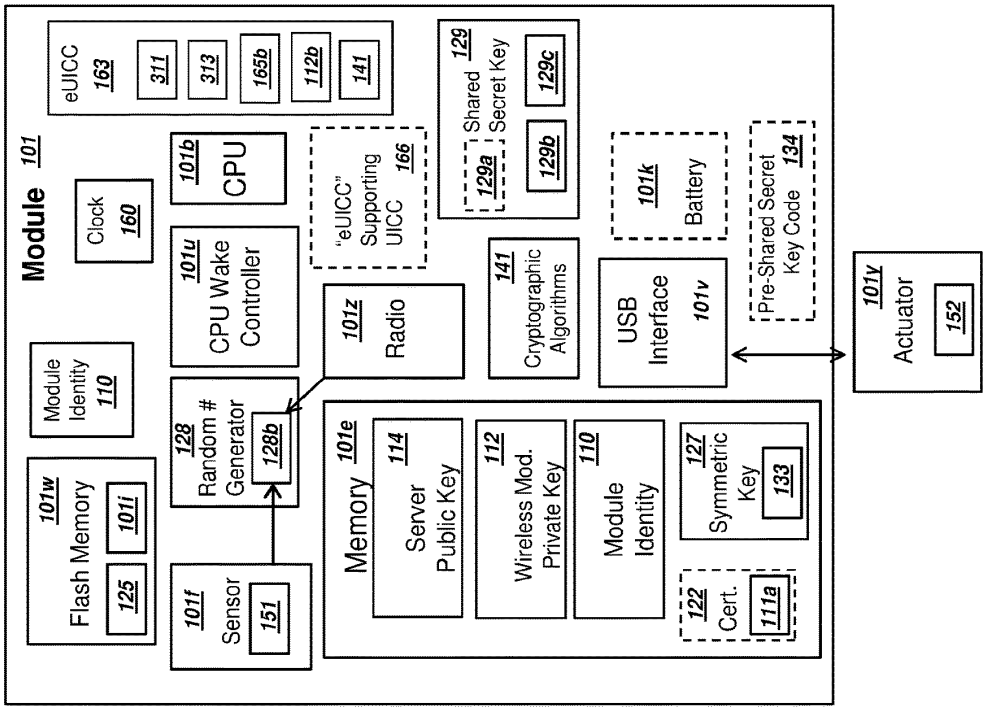

Figure 1b

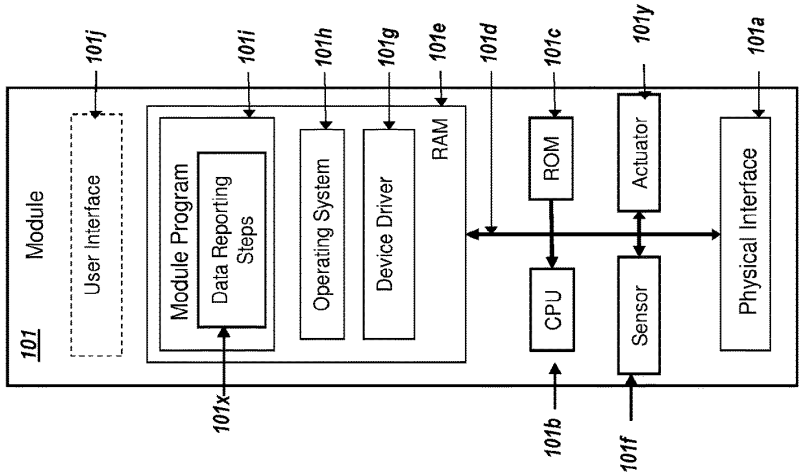

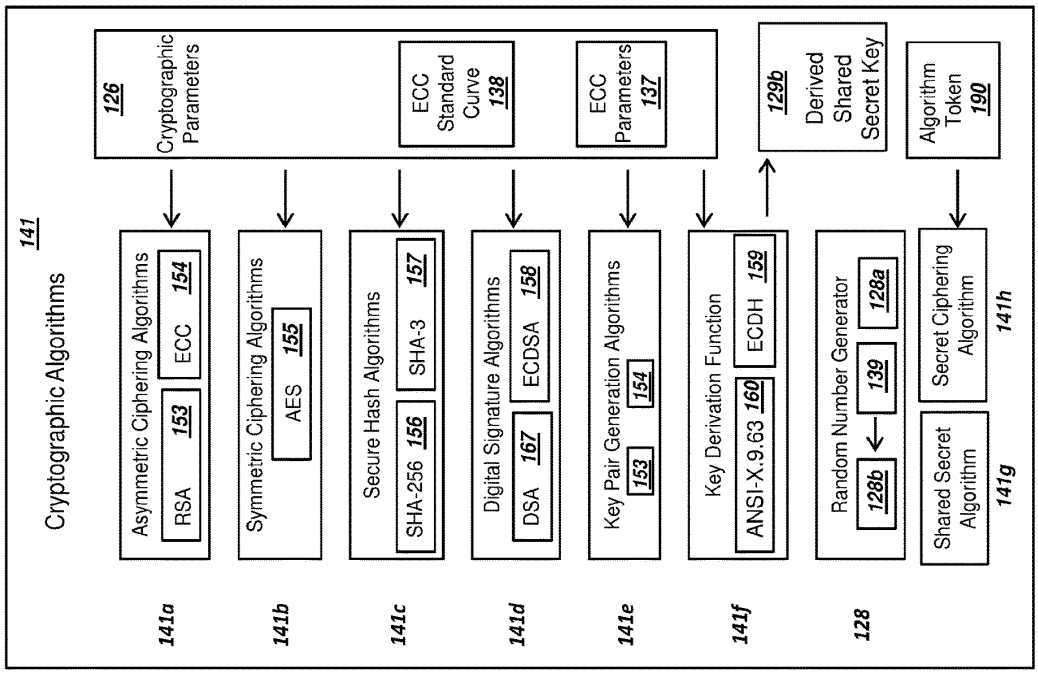
141
Cryptographic Algorithms
126
Cryptographic Parameters
Asymmetric Ciphering Algorithms
RSA 153
ECC 154
Symmetric Ciphering Algorithms
AES 155
Secure Hash Algorithms
SHA-256 156
SHA-3 157
Digital Signature Algorithms
DSA 167
ECDSA 158
Key Pair Generation Algorithms
153
154
Key Derivation Function
ANSI-X.9.63 160
ECDH 159
Random Number Generator
128b
139
128a
Shared Secret Algorithm
Secret Ciphering Algorithm
ECC Standard Curve 138
ECC Parameters 137
129b
Derived Shared Secret Key
Algorithm Token 190
141a
141b
141c
141d
141e
141f
128
141g
141h

Figure 1d

Figure 1e

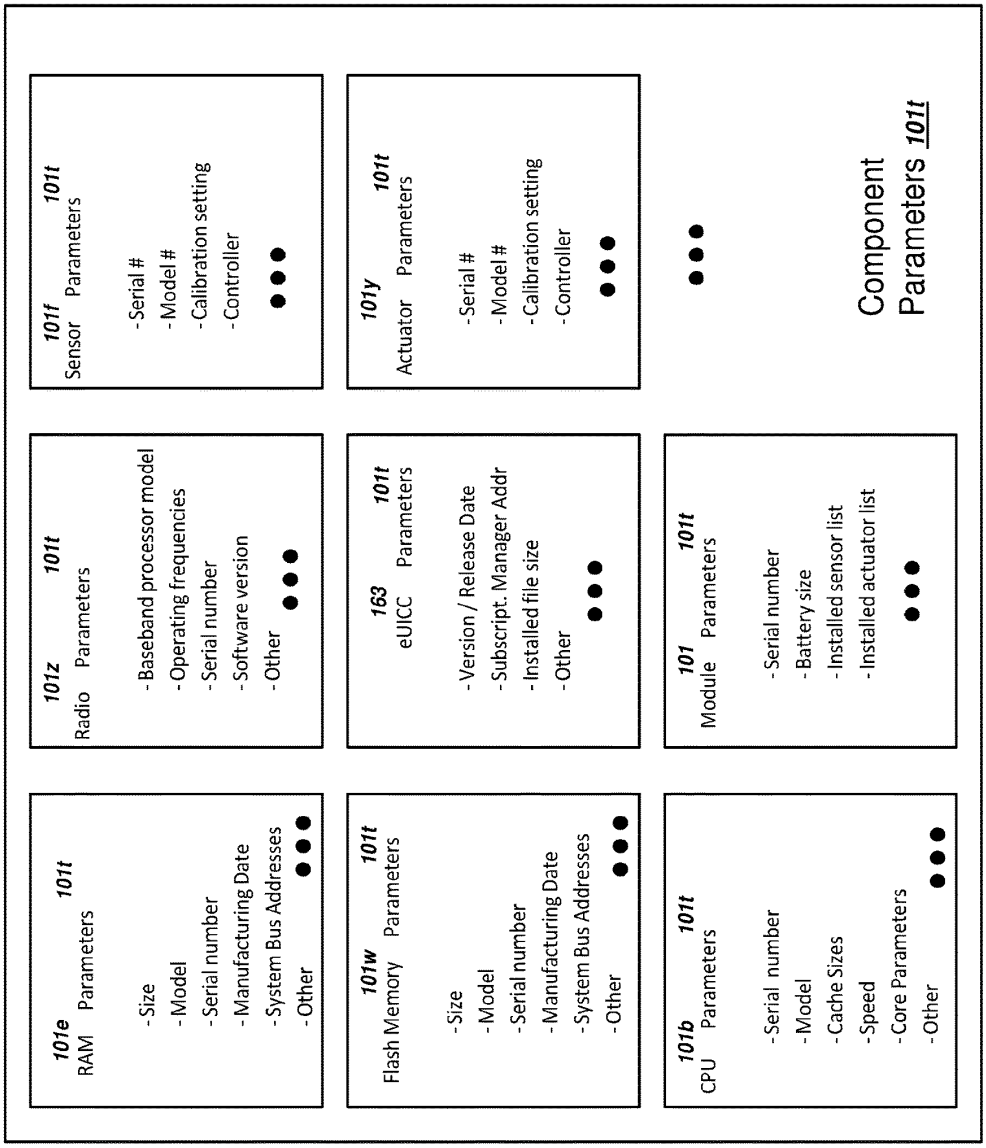
101e
RAM Parameters
101t
-Size
-Model
-Serial number
-Manufacturing Date
-System Bus Addresses
-Other
101z
Radio Parameters
101t
-Baseband processor model
-Operating frequencies
-Serial number
-Software version
-Other
101f
Sensor Parameters
101t
-Serial #
-Model #
-Calibration setting
-Controller
101w
Flash Memory Parameters
101t
-Size
-Model
-Serial number
-Manufacturing Date
-System Bus Addresses
-Other
163
eUICC Parameters
101t
-Version / Release Date
-Subscript. Manager Addr
-Installed file size
-Other
101y
Actuator Parameters
101t
-Serial #
-Model #
-Calibration setting
-Controller
101b
CPU Parameters
101t
-Serial number
-Model
-Cache Sizes
-Speed
-Core Parameters
-Other
101
Module Parameters
101t
-Serial number
-Battery size
-Installed sensor list
-Installed actuator list
Component Parameters 101t

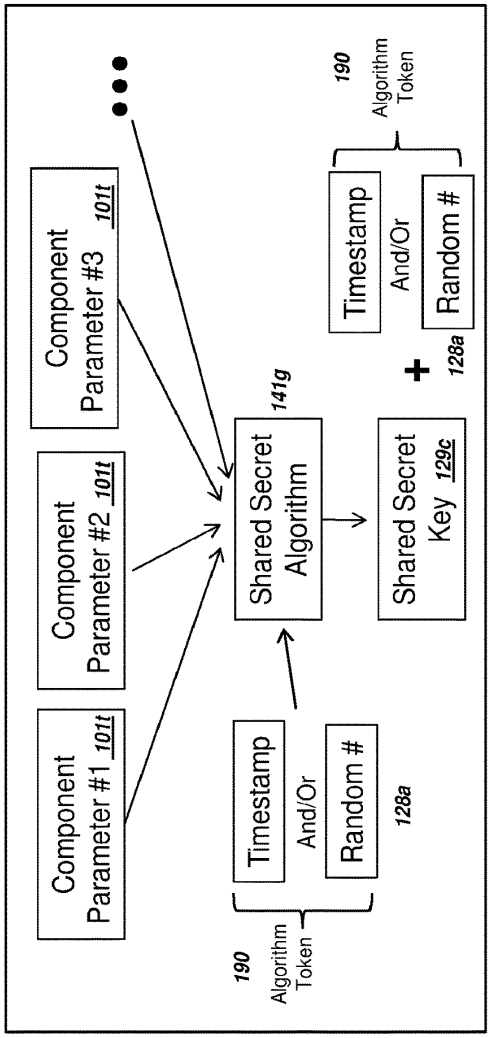

Figure 1f

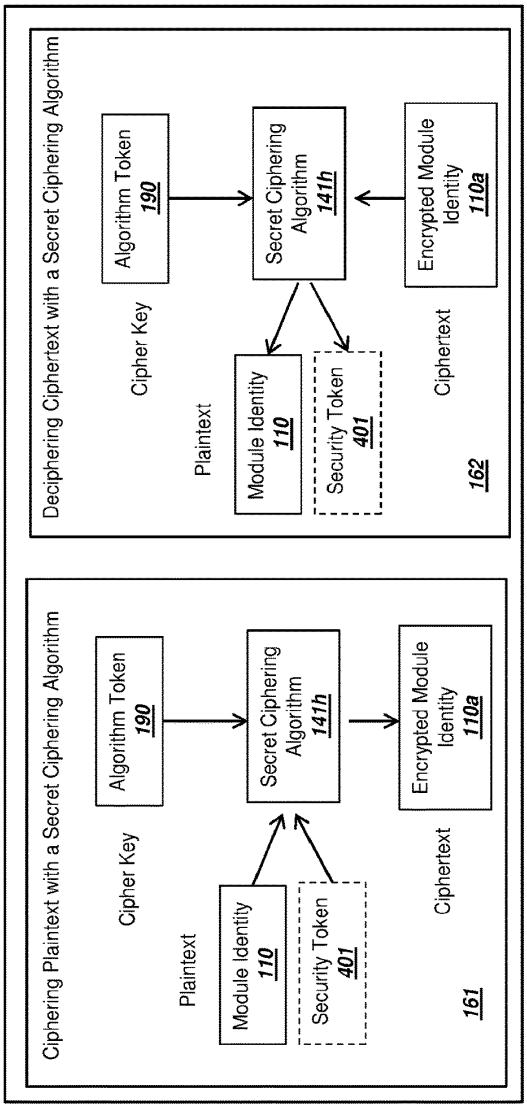

Figure 1g

Figure 1h

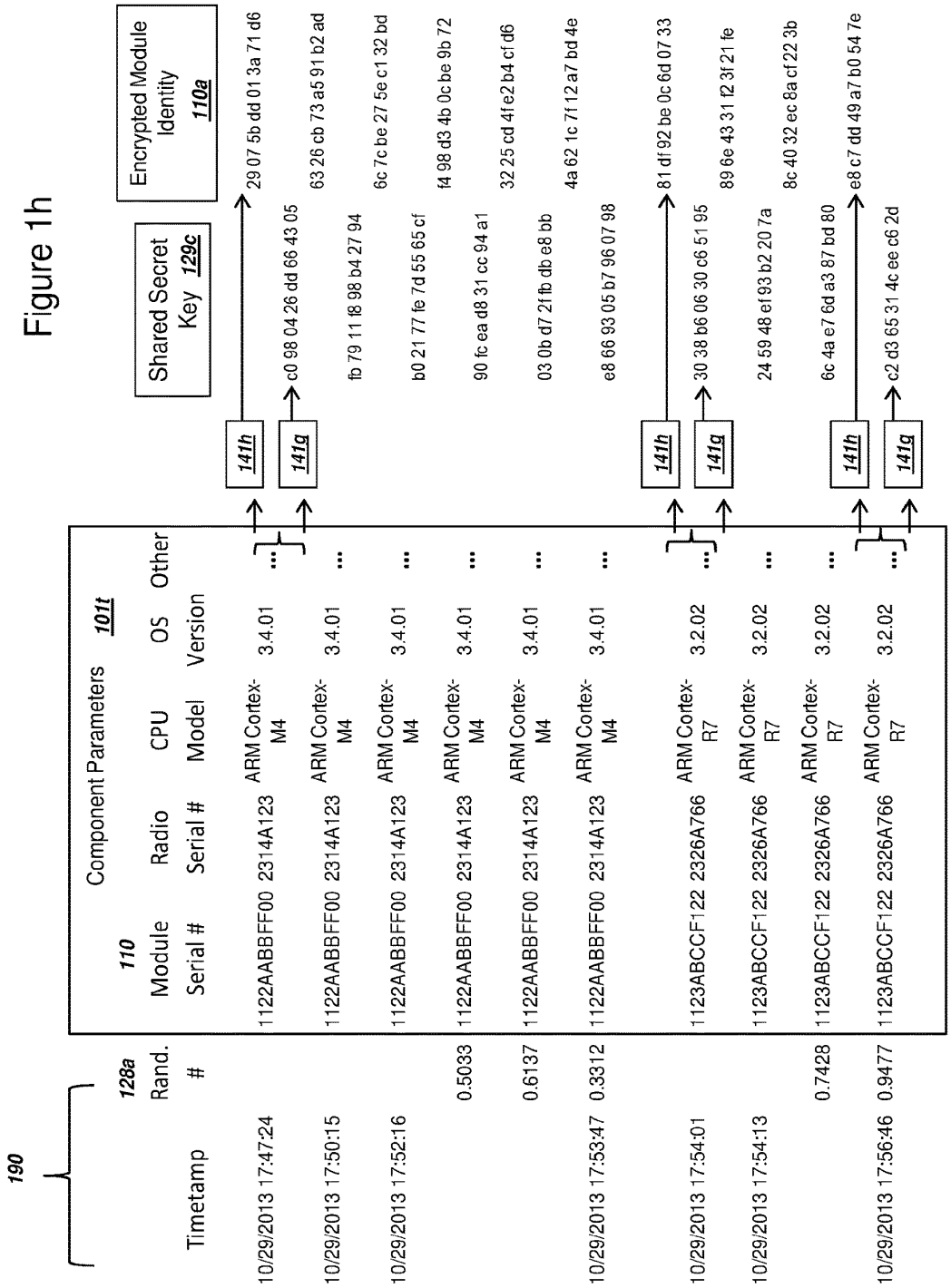
190
128a
Rand. #
Timetamp
110
Module Serial #
Radio Serial #
CPU Model
OS Version
Other
Component Parameters 101t
Shared Secret Key 129c
Encrypted Module Identity 110a
141h
141g
10/29/2013 17:47:24
0.5033
0.6137
0.3312
0.7428
0.9477
1122AABBFF00 2314A123 ARM Cortex-M4 3.4.01
1123ABCCF122 2326A766 ARM Cortex-R7 3.2.02
29 07 5b dd 01 3a 71 d6
c0 98 04 26 dd 66 43 05
fb 79 11 f8 98 b4 27 94
b0 21 77 fe 7d 55 65 cf
90 fc ea d8 31 cc 94 a1
03 0b d7 2f fb db e8 bb
e8 66 93 05 b7 96 07 98
63 26 cb 73 a5 91 b2 ad
6c 7c be 27 5e c1 32 bd
f4 98 d3 4b 0c be 9b 72
32 25 cd 4f e2 b4 cf d6
4a 62 1c 7f 12 a7 bd 4e
81 df 92 be 0c 6d 07 33
30 38 b6 06 30 c6 51 95
24 59 48 ef 93 b2 20 7a
89 6e 43 31 f2 3f 21 fe
8c 40 32 ec 8a cf 22 3b
6c 4a e7 6d a3 87 bd 80
e8 c7 dd 49 a7 b0 54 7e
c2 d3 65 31 4c ee c6 2d

Figure 1i

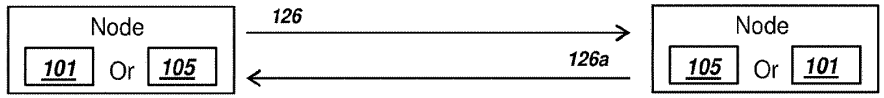

Set of Cryptographic Parameters 126

Assymetric Ciphering Algorithms
- Standard Equations: 138 sect239k1, sect283k1, sect283r1
- Custom Equation: Allowed
  - Equation Values: p, a, b, g, n 137
- Points formats: ansiX962_compr_prime, uncompressed

Symmetric Ciphering Algorithms
- Ciphers, key length: AES - 128, 3TDEA, Serpent - 128
- Symmetric key vailidity: > 1 day, <30 days

Secure Hash Algorithms
- Algorithms, length: SHA-224, SHA-256, SHA-384, SHA-3-512

Digital Signature Algorithms
- Hash: Any above
- Algorithm: ECDSA, DSA
- Encoding Rules: ASN.1 DER

Key Pair Generation Algorithm

Algorithms:	ECC	RSA
Length:	160-320;	2048 - 3072
Key pair validity:	>180 days, <730 Days	

General

Security Token:	Mandatory		
Security Token Length:	>7 bytes, <20 bytes		
Module Identity:	Obfuscated - XOR, Algorithm A		
Certificate Required:	No		
Certificate Format:	X.509 v3		
Public key identity:	Yes		
Public key Authentication:	Last private key		
Public key encrypted:	Yes		
Padding:	Bit, ANSI X.923, PKCS7, other		
Padding For:	Hash, Digital Signature		126c
Key encoding:	ASN.1,	CSN.1	Set "A"
Encoding Rules:	BER	DER	

Subset of Cryptographic Parameters 126a

141a Assymetric Ciphering Algorithms
- Standard Equations: sect239k1
- Custom Equation: No
  - Equation Values: NA
- Points formats: uncompressed

141b Symmetric Ciphering Algorithms
- Ciphers, key length: AES - 128 ← 155
- Symmetric key vailidity: 15 days ← 133

141c Secure Hash Algorithms
- Algorithms, length: SHA-256

141d Digital Signature Algorithms
- Hash: SHA-256
- Algorithm: ECDSA ← 158
- Encoding Rules: ASN.1 DER

141e Key Pair Generation Algorithm
- Algorithms: ECC ← 154
- Length: 239 bits ← 126e
- Key pair validity: 365 days

126b General

401'	Security Token:	Yes
	Security Token Length:	8 bytes
110a'	Module Identity:	Obfuscasted - Algorithm A
122'	Certificate Required:	No
	Certificate Format:	NA
111a'	Public key identity:	Yes
517'	Public key Authentication:	Last private key
	Public key encrypted:	Yes
126c'	Padding:	Bit
	Padding For:	Hash, Digital Signature
126d'	Key encoding:	ASN.1
	Encoding Rules:	DER

Figure 1j

283 bit Elliptic Curve Key with SHA 256 Signature ("..." is long text removed)

```
Certificate:
  Data:
    Version: 3 (0x2)
    Serial Number: 1234931064 (0x499c6c20)
    Signature Algorithm: SHA-256 ECDSA-256.                                   110
    Issuer: OU=JNIX, CN=server01
    Validity
      Not Before: Feb 01 20:15:24 2009 GMT
126a  Not After : Jul 01 20:15:24 2019 GMT
    Subject: C=US, ST=Illinois, L=Chicago, O=Module Provider, OU=1122AABBFF00
111a  CN=456
  Subject Public Key Info:
      Public Key Algorithm: id-ecPublicKey
        EC Public Key:
         pub:
           a7:a0:8a:0e:27:8f:8f:67:7f:05:36:0c:7e:f4:18:
111        ...
           67:60:2d:57:87:8d:cd:0b:e1:f5:3f:ac:aa:81:ea:
126a    ASN1 OID: sect283r1
    X509v3 extensions:
      X509v3 Subject Key Identifier:
        8D:F4:51:AB:B9:41:1F:FC:73:B3:DB:77:45:96:15:54:1A:52:85:25
122   X509v3 Authority Key Identifier:
        keyid:FC:99:74:45:56:10:F1:87:AD:EA:56:70:67:A2:26:0E:3D:9E:D6:66
        DirName:/OU=JNIX/CN=server41
        serial:49:9C:6A:ED
      X509v3 CRL Distribution Points:
        Full Name:
          URI:URI:http://www.inchargesys.com/ca/crl/ics_root_ca.crl
      X509v3 Key Usage:
        Digital Signature
  Signature Algorithm: ECDSA with SHA256
    83:08:20:2a:79:e3:c3:60:b0:2f:c2:89:d4:a2:b7:57:3e:b6:
123           ...
    05:ce:d3:e4:34:cf:d2:e1:e3:c3:60:b0:2f:c2:25
-----BEGIN CERTIFICATE-----
BggqgRzXYwzjCCAYKgAwIBAgIESZxsIDKnnjw2CwL8KJ1K
...
EBAQUAMCIxDTALMIIBegwggK3Vz62JQ==
-----END CERTIFICATE-----
```

Figure 1m

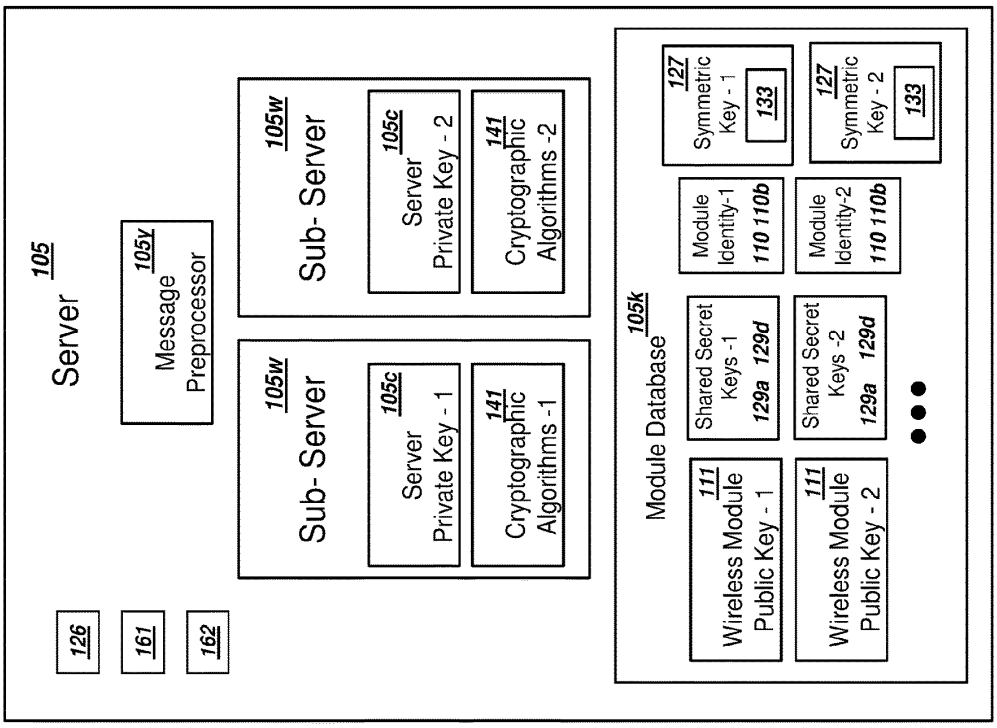

Figure 1k

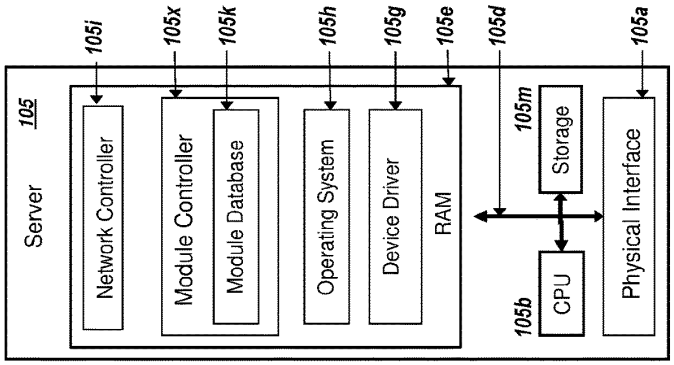

Figure 2

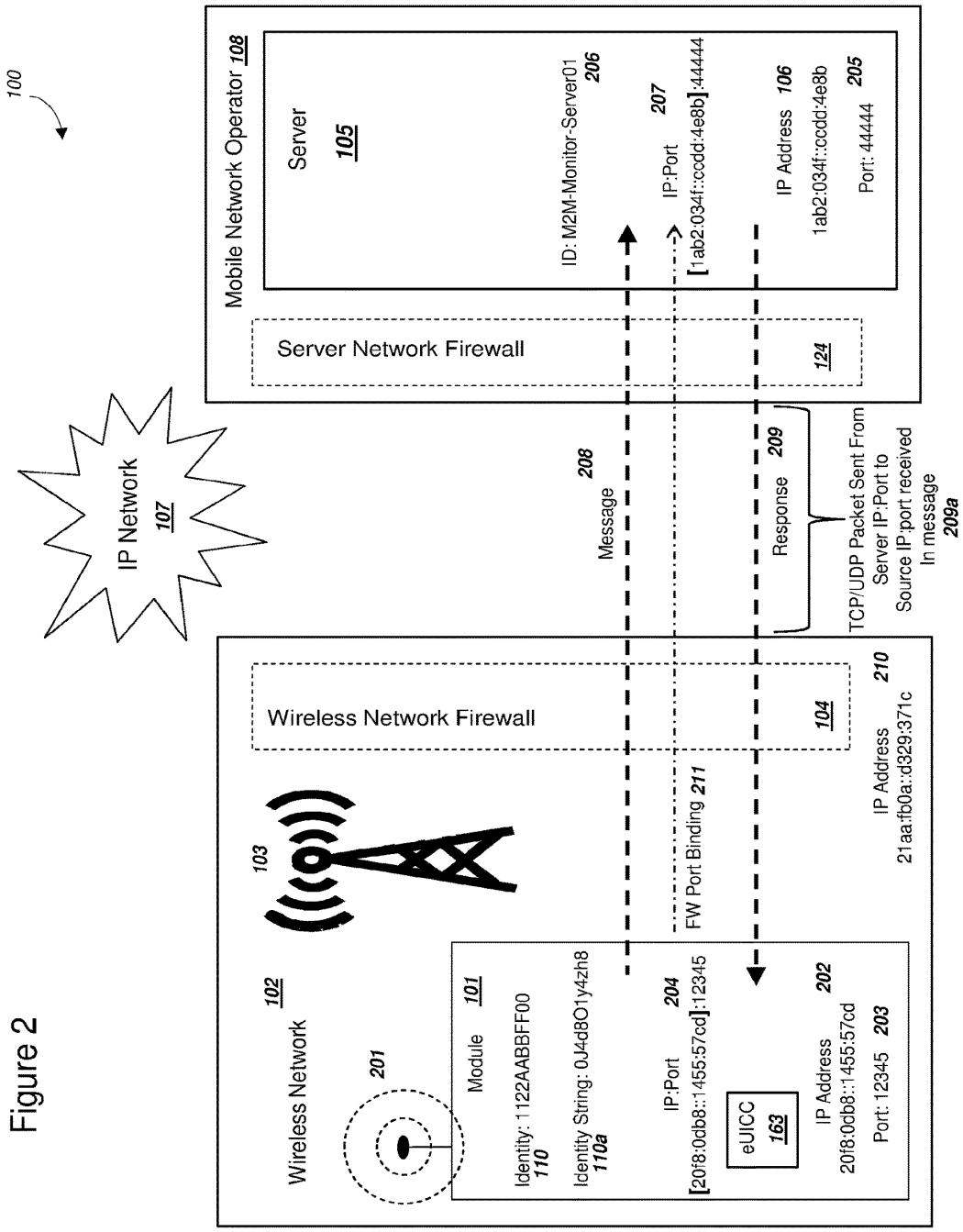
100
Mobile Network Operator 108
Server
105
ID: M2M-Monitor-Server01
206
IP:Port
207
[1ab2:034f::ccdd:4e8b]:44444
IP Address 106
1ab2:034f::ccdd:4e8b
Port: 44444
205
Server Network Firewall
124
IP Network
107
208
Message
Response
209
TCP/UDP Packet Sent From
Server IP:Port to
Source IP:port received
In message
209a
Wireless Network Firewall
104
103
IP Address
210
21aa:fb0a::d329:371c
FW Port Binding 211
102
Wireless Network
201
Module
101
Identity: 1122AABBFF00
110
Identity String: 0J4d8O1y4zh8
110a
IP:Port
204
[20f8:0db8::1455:57cd]:12345
eUICC
163
IP Address
202
20f8:0db8::1455:57cd
Port: 12345
203

Figure 3b

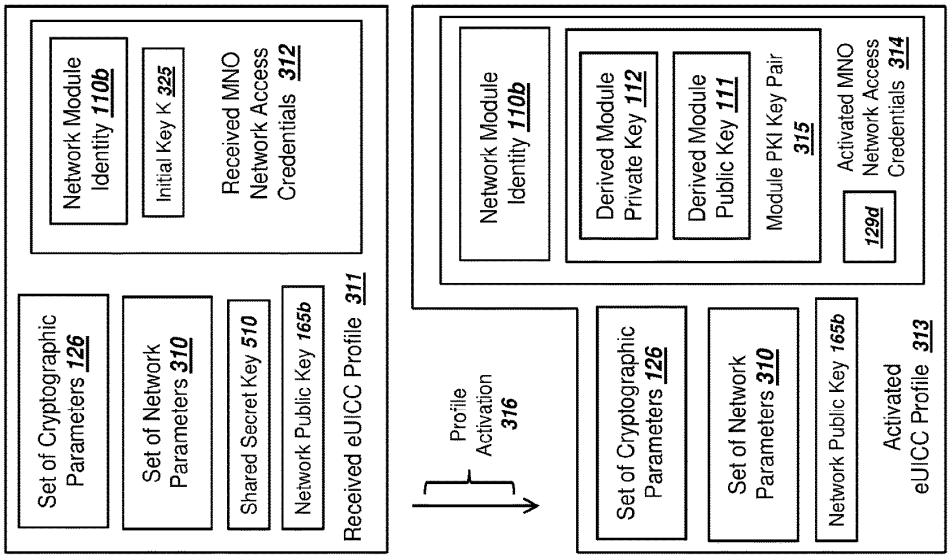

Figure 3a

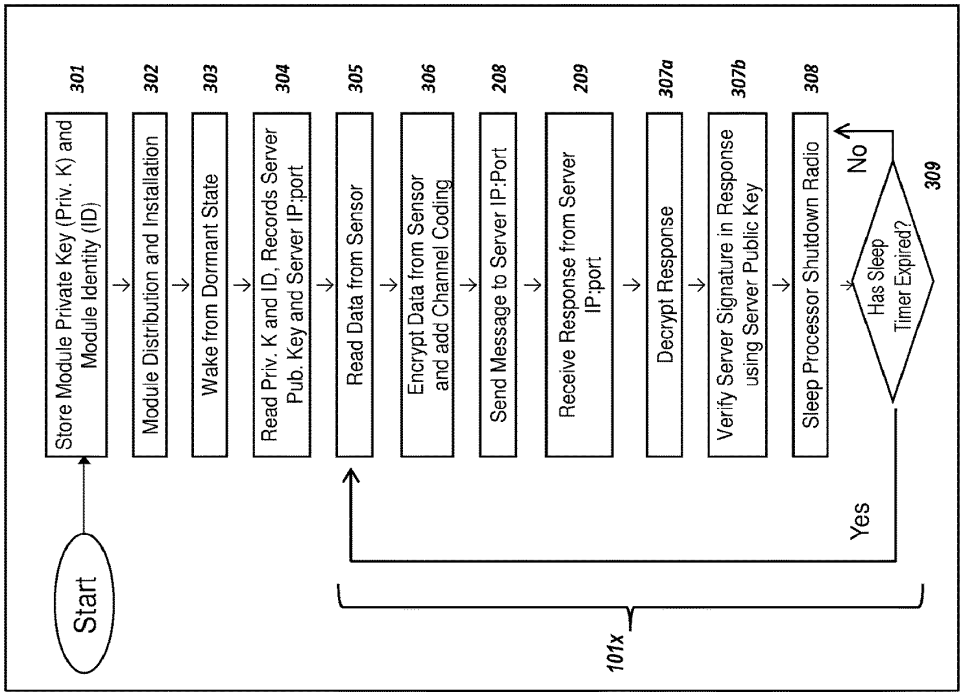

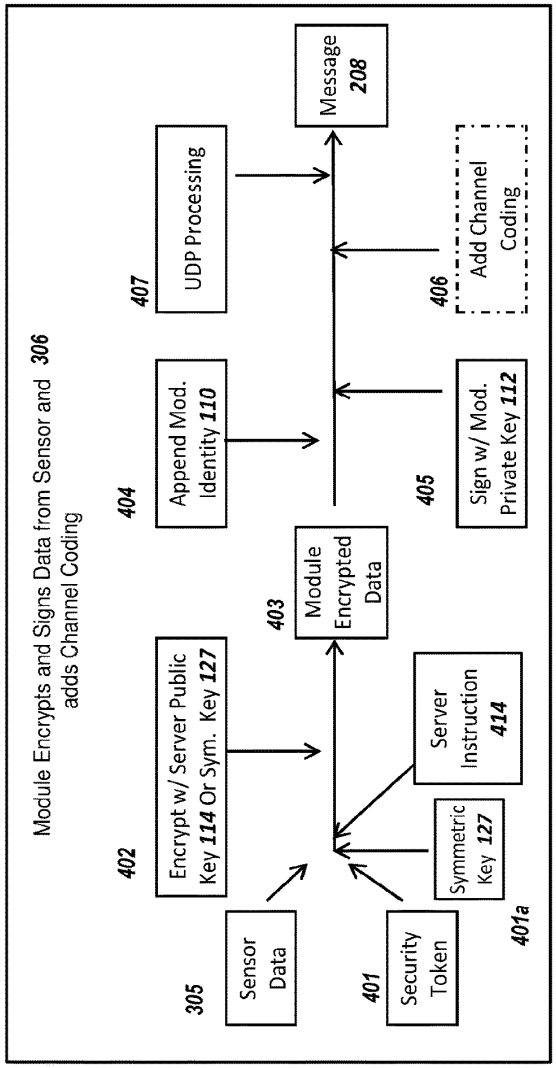

Figure 4

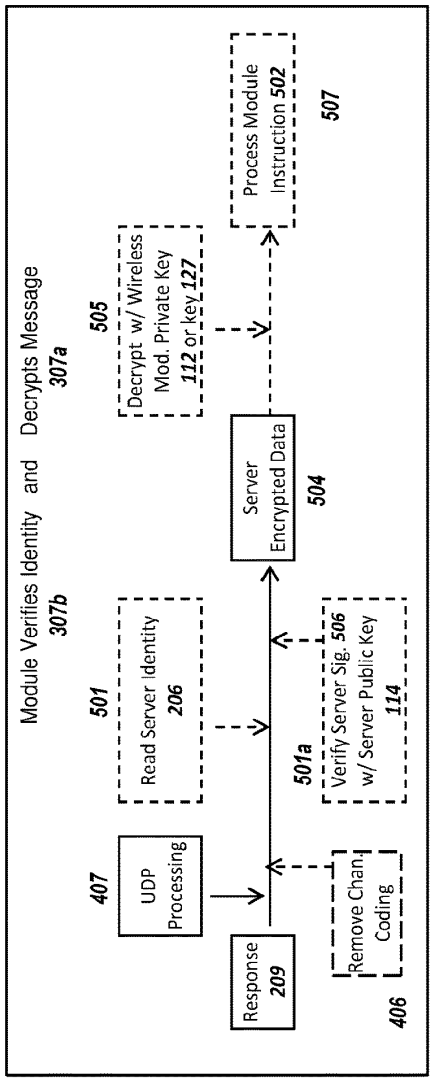

Figure 5a

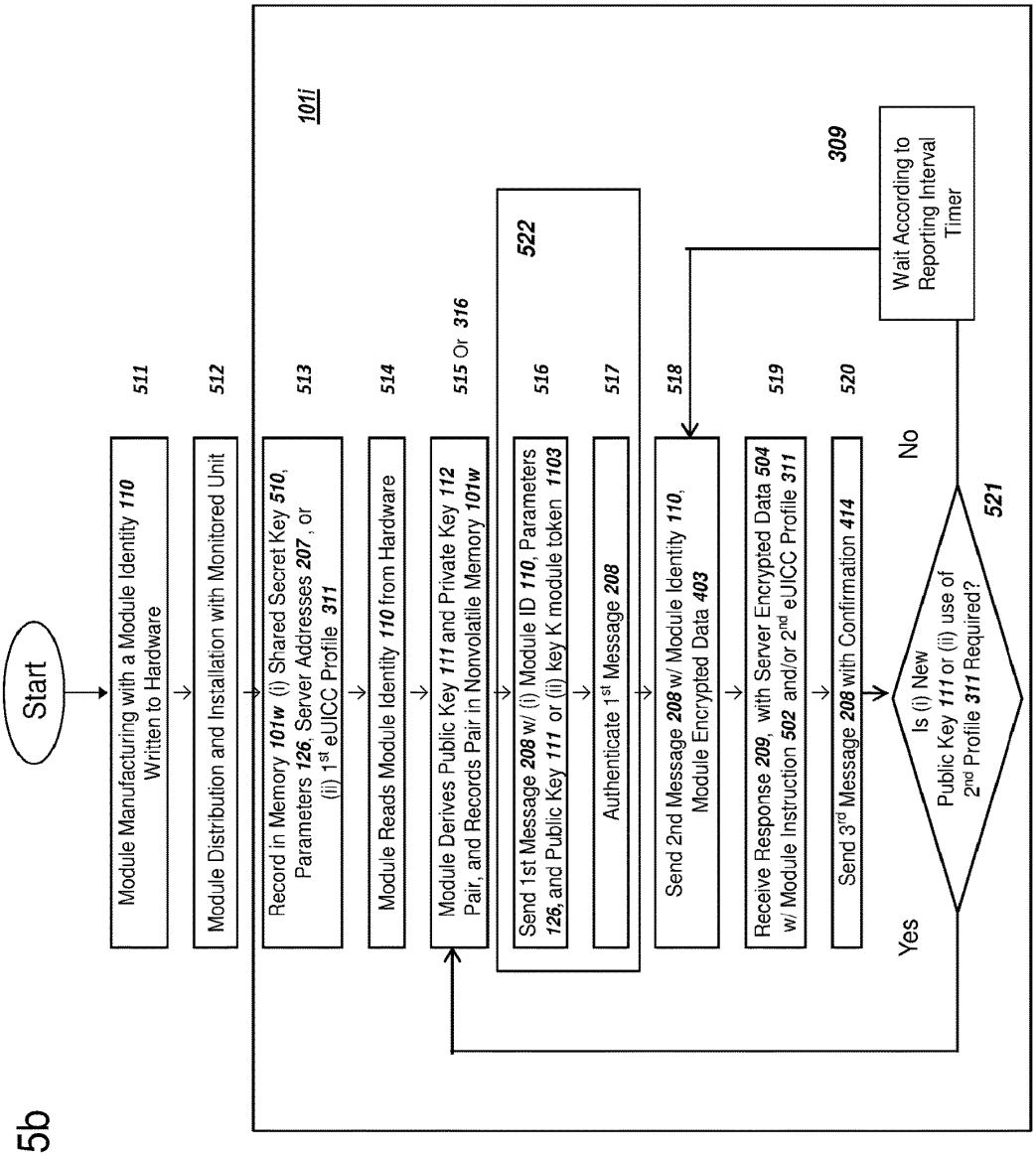
Start
Module Manufacturing with a Module Identity 110 Written to Hardware
511
Module Distribution and Installation with Monitored Unit
512
101i
Record in Memory 101w (i) Shared Secret Key 510, Parameters 126, Server Addresses 207, or (ii) 1st eUICC Profile 311
513
Module Reads Module Identity 110 from Hardware
514
Module Derives Public Key 111 and Private Key 112 Pair, and Records Pair in Nonvolatile Memory 101w
515 Or 316
522
Send 1st Message 208 w/ (i) Module ID 110, Parameters 126, and Public Key 111 or (ii) key K module token 1103
516
Authenticate 1st Message 208
517
Send 2nd Message 208 w/ Module Identity 110, Module Encrypted Data 403
518
309
Wait According to Reporting Interval Timer
Receive Response 209, with Server Encrypted Data 504 w/ Module Instruction 502 and/or 2nd eUICC Profile 311
519
Send 3rd Message 208 with Confirmation 414
520
No
Yes
Is (i) New Public Key 111 or (ii) use of 2nd Profile 311 Required?
521

Figure 5b

Figure 6

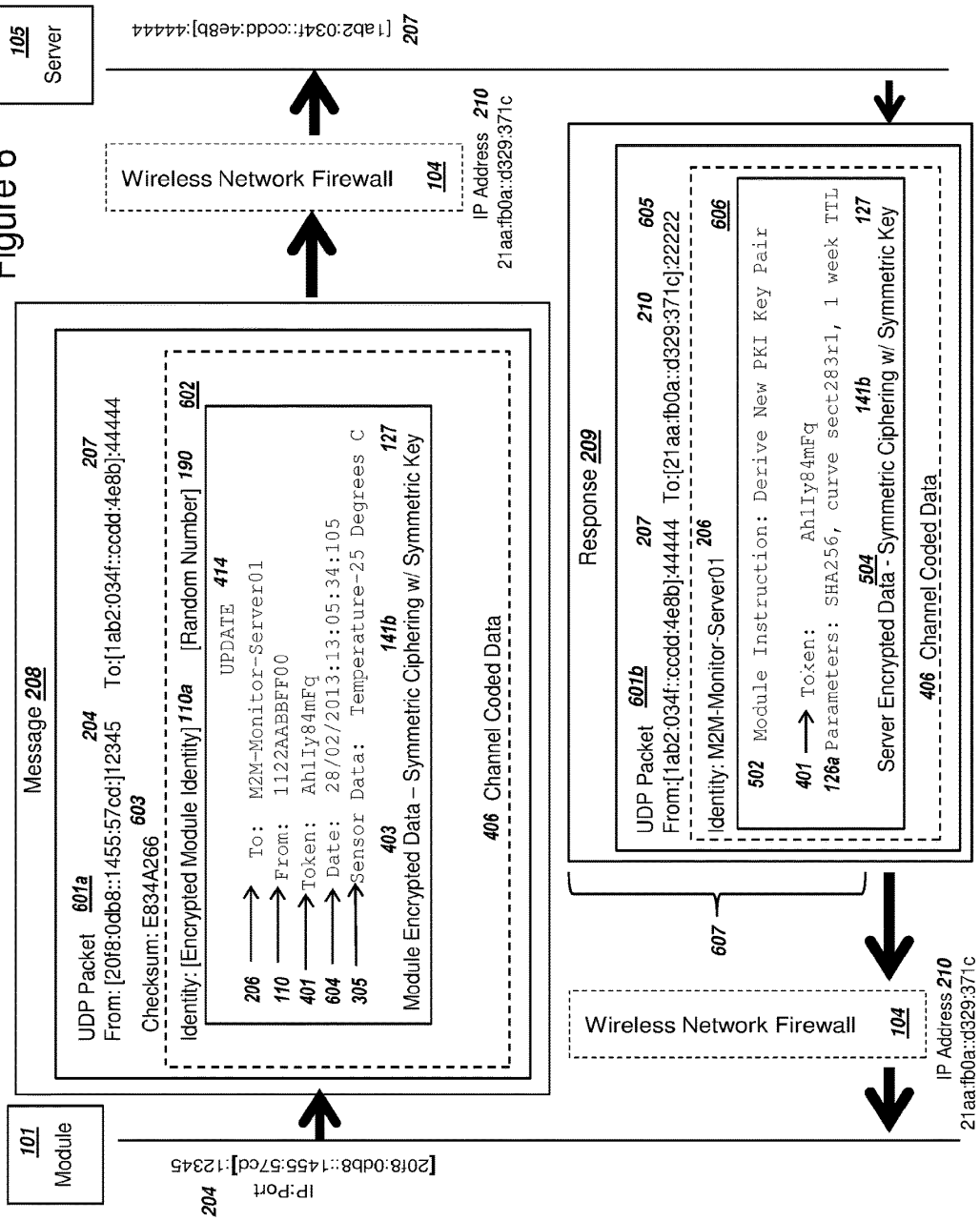
105
Server
[1ab2:034f::ccdd:4e8b]:44444
207
Wireless Network Firewall
104
IP Address 210
21aa:fb0a::d329:371c
Message 208
UDP Packet 601a
From: [20f8:0db8::1455:57cd:]12345 204
To:[1ab2:034f::ccdd:4e8b]:44444 207
Checksum: E834A266 603
Identity: [Encrypted Module Identity] 110a [Random Number] 190 602
UPDATE 414
206 To: M2M-Monitor-Server01
110 From: 1122AABBFF00
401 Token: AhlIy84mFq
604 Date: 28/02/2013:13:05:34:105
305 Sensor Data: Temperature-25 Degrees C
Module Encrypted Data – Symmetric Ciphering w/ Symmetric Key 403 141b 127
406 Channel Coded Data
Response 209
UDP Packet 601b
From:[1ab2:034f::ccdd:4e8b]:44444 207
To:[21aa:fb0a::d329:371c]:22222 210 605
Identity: M2M-Monitor-Server01 206
606
502 Module Instruction: Derive New PKI Key Pair
401 Token: AhlIy84mFq
126a Parameters: SHA256, curve sect283r1, 1 week TTL
Server Encrypted Data - Symmetric Ciphering w/ Symmetric Key 504 141b 127
406 Channel Coded Data
607
Wireless Network Firewall
104
IP Address 210
21aa:fb0a::d329:371c
101
Module
IP:Port
[20f8:0db8::1455:57cd]:12345
204

Figure 7

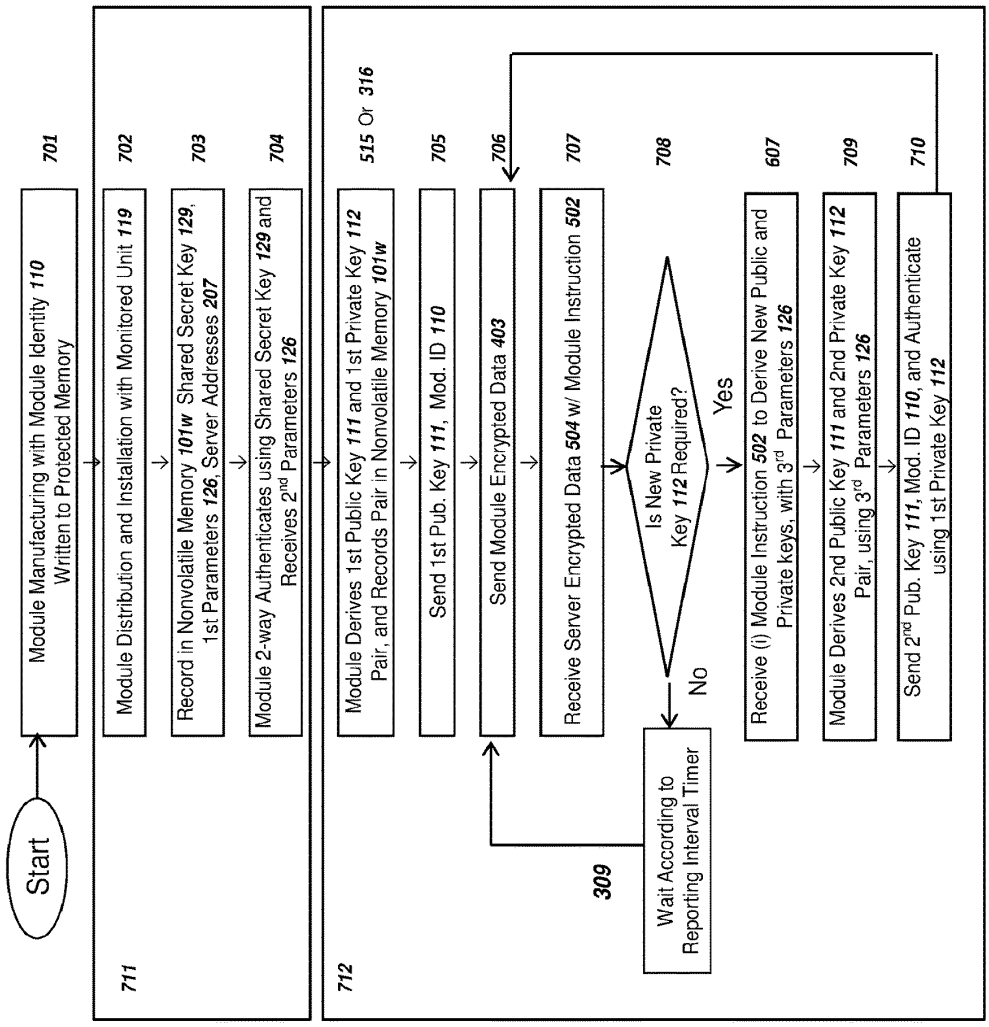
Start
Module Manufacturing with Module Identity 110 Written to Protected Memory
701
711
Module Distribution and Installation with Monitored Unit 119
702
Record in Nonvolatile Memory 101w Shared Secret Key 129, 1st Parameters 126, Server Addresses 207
703
Module 2-way Authenticates using Shared Secret Key 129 and Receives 2nd Parameters 126
704
712
Module Derives 1st Public Key 111 and 1st Private Key 112 Pair, and Records Pair in Nonvolatile Memory 101w
515 Or 316
Send 1st Pub. Key 111, Mod. ID 110
705
Send Module Encrypted Data 403
706
Receive Server Encrypted Data 504 w/ Module Instruction 502
707
Is New Private Key 112 Required?
708
No
Yes
Wait According to Reporting Interval Timer
309
Receive (i) Module Instruction 502 to Derive New Public and Private keys, with 3rd Parameters 126
607
Module Derives 2nd Public Key 111 and 2nd Private Key 112 Pair, using 3rd Parameters 126
709
Send 2nd Pub. Key 111, Mod. ID 110, and Authenticate using 1st Private Key 112
710

Figure 8

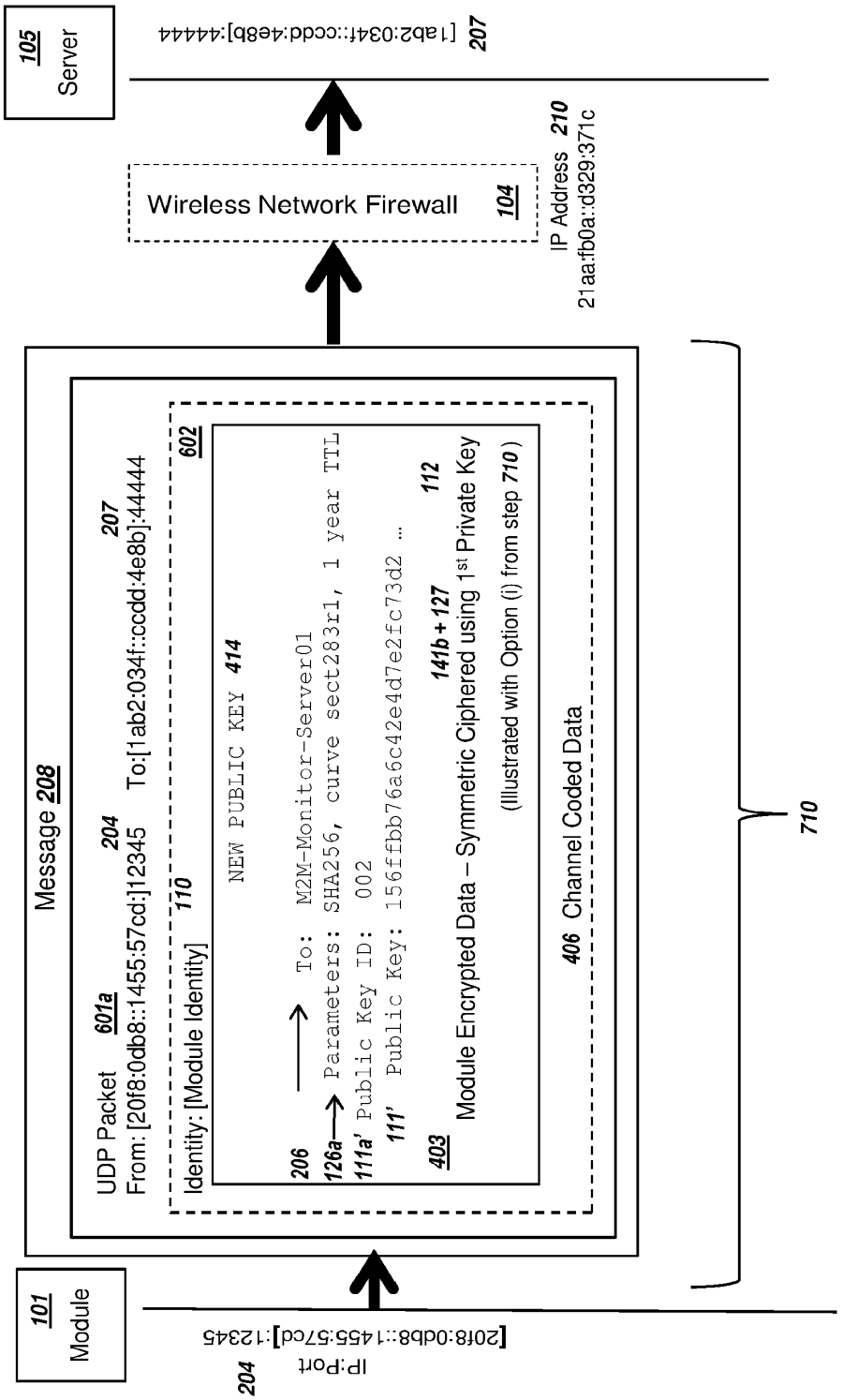
105
Server
[1ab2:034f::ccdd:4e8b]:44444
207
Wireless Network Firewall
104
IP Address 210
21aa:fb0a::d329:371c
Message 208
UDP Packet 601a
From: [20f8:0db8::1455:57cd:]12345
204
To:[1ab2:034f::ccdd:4e8b]:44444
207
Identity: [Module Identity] 110
602
NEW PUBLIC KEY 414
206
To: M2M-Monitor-Server01
126a
Parameters: SHA256, curve sect283r1, 1 year TTL
111a'
Public Key ID: 002
111'
Public Key: 156ffbb76a6c42e4d7e2fc73d2 ...
403
141b + 127
112
Module Encrypted Data – Symmetric Ciphered using 1st Private Key
(Illustrated with Option (i) from step 710)
406
Channel Coded Data
710
101
Module
IP:Port
[20f8:0db8::1455:57cd]:12345
204

Figure 9b

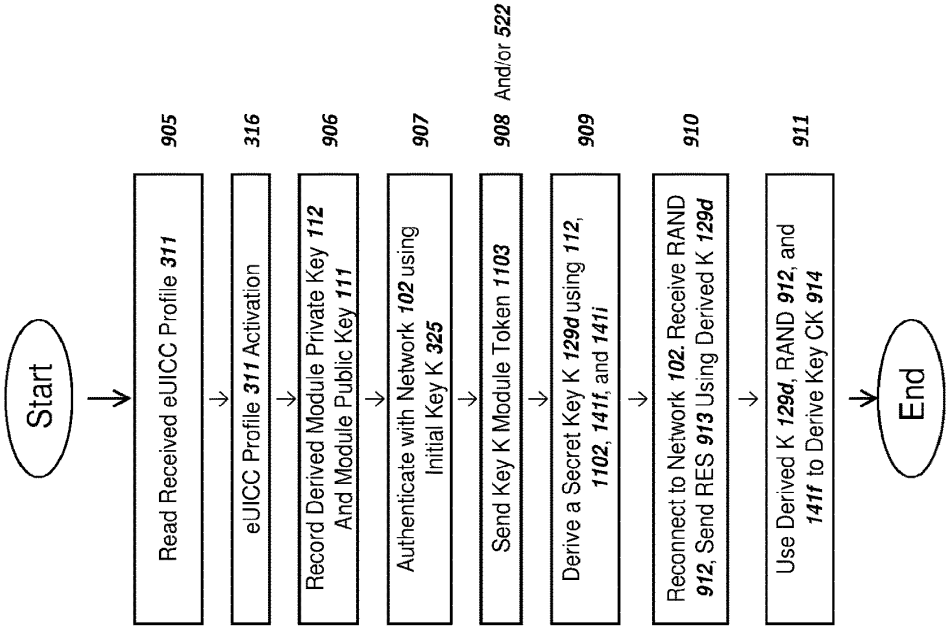

Figure 9a

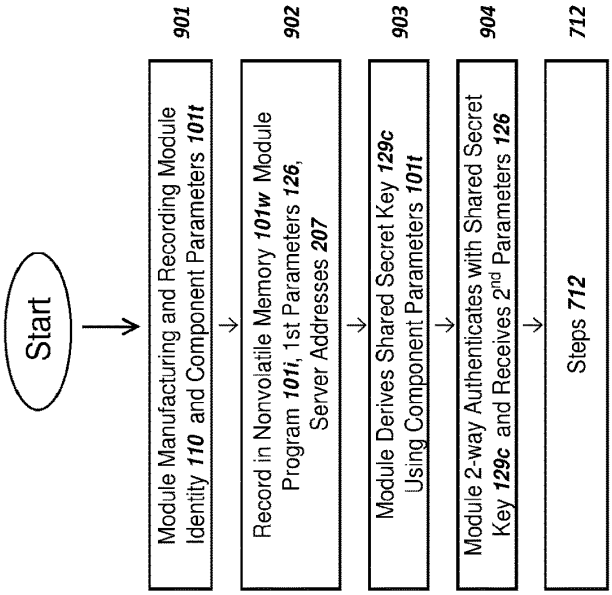

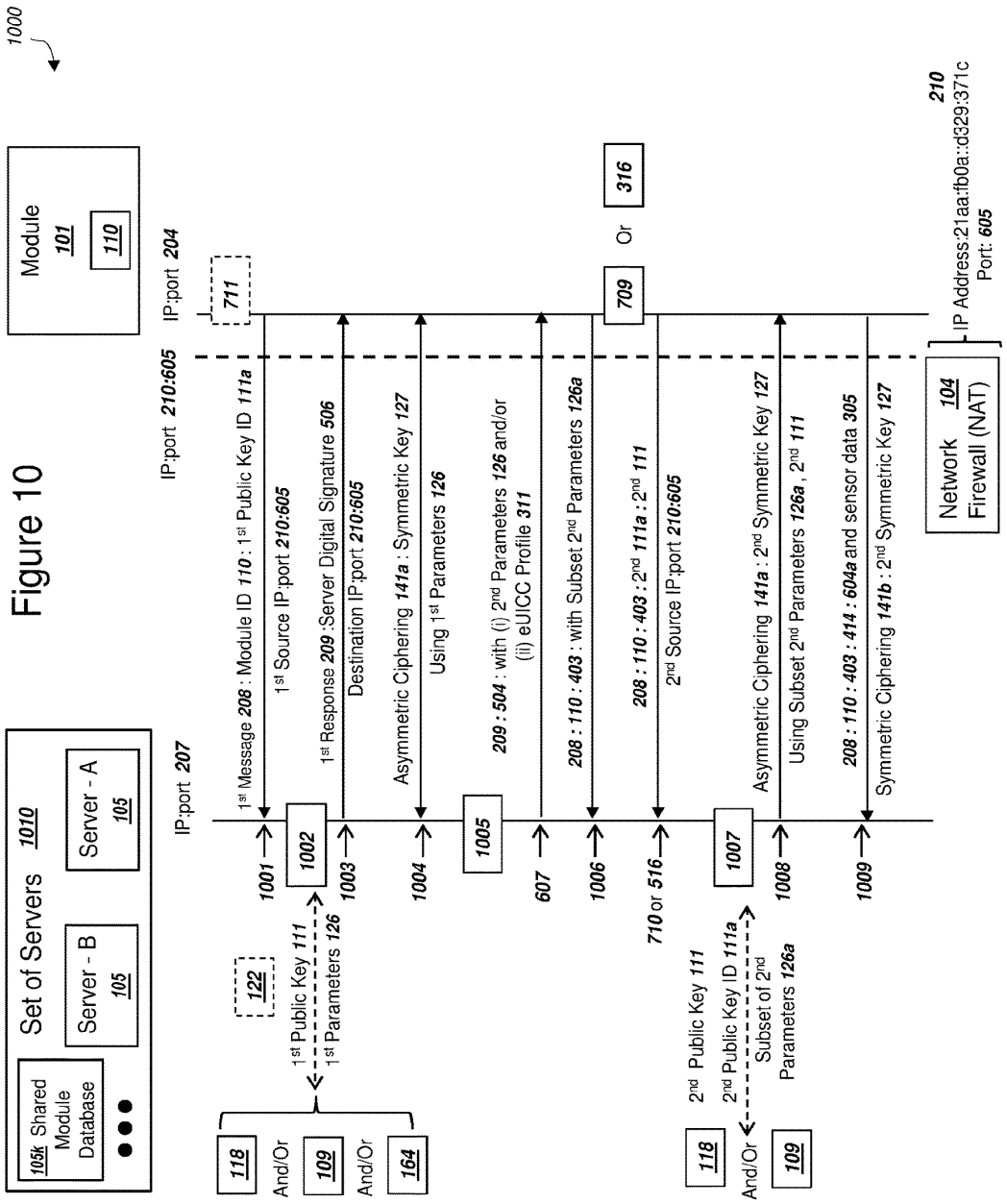
1000
Module
101
110
Set of Servers 1010
105k Shared Module Database
Server - B 105
Server - A 105
IP:port 207
IP:port 210:605
IP:port 204
711
709
Or
316
210
IP Address:21aa:fb0a::d329:371c
Port: 605
Network 104
Firewall (NAT)
1st Message 208 : Module ID 110 : 1st Public Key ID 111a
1001
1002
1st Source IP:port 210:605
1st Response 209 :Server Digital Signature 506
1003
Destination IP:port 210:605
1004
Asymmetric Ciphering 141a : Symmetric Key 127
Using 1st Parameters 126
1005
607
209 : 504 : with (i) 2nd Parameters 126 and/or (ii) eUICC Profile 311
1006
208 : 110 : 403 : with Subset 2nd Parameters 126a
710 or 516
208 : 110 : 403 : 2nd 111a : 2nd 111
2nd Source IP:port 210:605
1007
Asymmetric Ciphering 141a : 2nd Symmetric Key 127
1008
Using Subset 2nd Parameters 126a , 2nd 111
1009
208 : 110 : 403 : 414 : 604a and sensor data 305
Symmetric Ciphering 141b : 2nd Symmetric Key 127
122
1st Public Key 111
1st Parameters 126
118
And/Or
109
And/Or
164
2nd Public Key 111
2nd Public Key ID 111a
Subset of 2nd Parameters 126a
118
And/Or
109

Figure 10

Figure 11

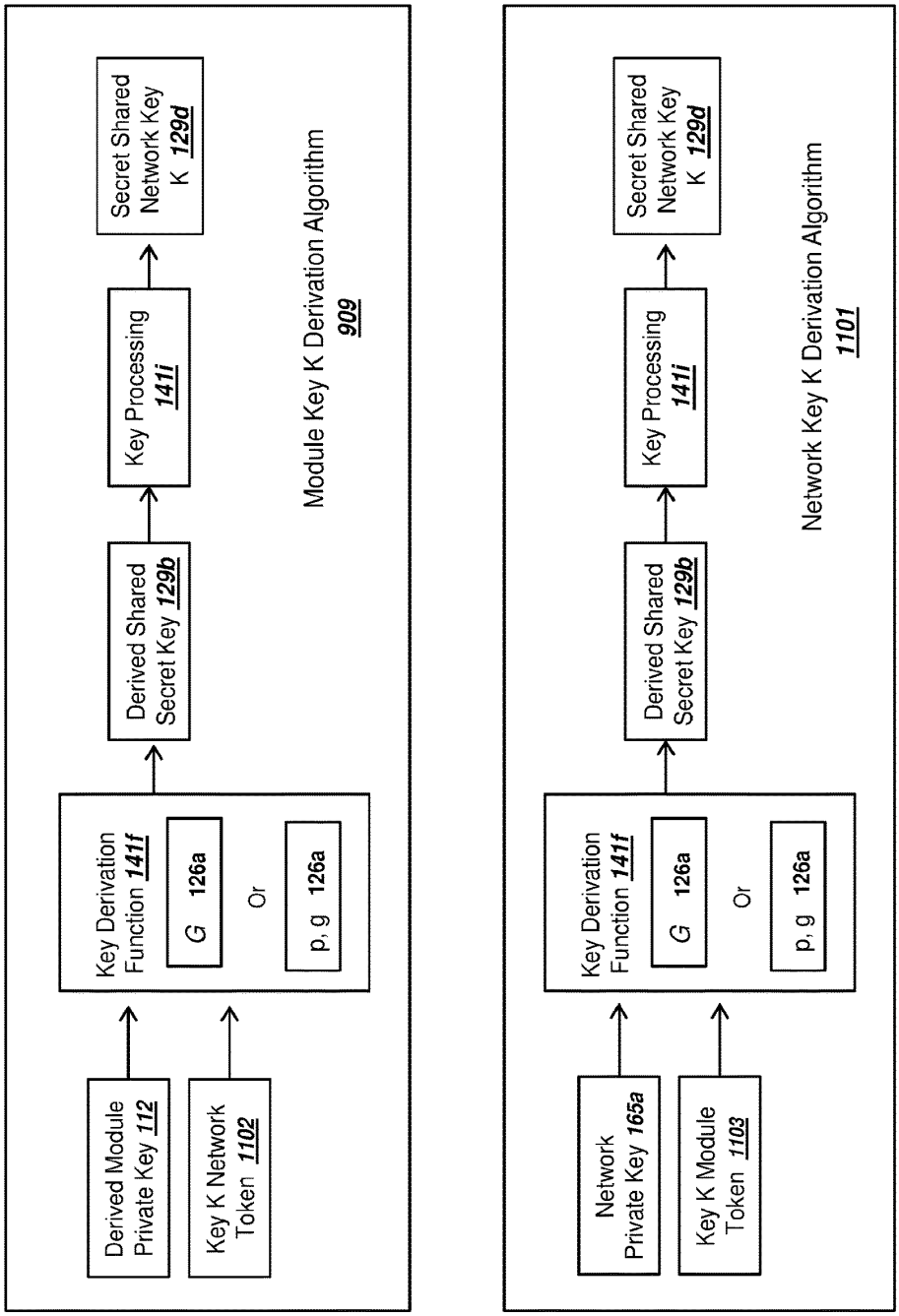
Derived Module Private Key 112
Key K Network Token 1102
Key Derivation Function 141f
G 126a
Or
p, g 126a
Derived Shared Secret Key 129b
Key Processing 141i
Secret Shared Network Key K 129d
Module Key K Derivation Algorithm 909
Network Private Key 165a
Key K Module Token 1103
Key Derivation Function 141f
G 126a
Or
p, g 126a
Derived Shared Secret Key 129b
Key Processing 141i
Secret Shared Network Key K 129d
Network Key K Derivation Algorithm 1101

KEY DERIVATION FOR A MODULE USING AN EMBEDDED UNIVERSAL INTEGRATED CIRCUIT CARD

CROSS-REFERENCE TO RELATED APPLICATIONS

This is a continuation of U.S. patent application Ser. No. 17/304,922, filed Jun. 28, 2021, which is a continuation of U.S. patent application Ser. No. 16/879,325, filed May 20, 2020, which is a continuation of U.S. patent application Ser. No. 16/201,401, filed Nov. 27, 2018, and which issued as U.S. Pat. No. 10,700,856, which is a continuation of U.S. patent application Ser. No. 15/680,758, filed Aug. 18, 2017, and which issued as U.S. Pat. No. 10,187,206, which is a continuation of U.S. patent application Ser. No. 15/130,146, filed Apr. 15, 2016, and which issued as U.S. Pat. No. 9,742,562, which is a continuation of U.S. patent application Ser. No. 14/084,141, filed Nov. 19, 2013, and which issued as U.S. Pat. No. 9,319,223, each of which is fully incorporated by reference herein.

The subject matter of this application is related to the subject matter of U.S. patent application Ser. No. 14/023,181, filed Sep. 10, 2013 in the name of John Nix, entitled "Power Management and Security for Wireless Modules in 'Machine-to-Machine' Communications," which is hereby incorporated by reference in its entirety.

The subject matter of this application is also related to the subject matter of U.S. patent application Ser. No. 14/039,401, filed Sep. 27, 2013 in the name of John Nix, entitled "Secure PM Communications for 'Machine-to-Machine' Modules, including Key Derivation by Modules and Authenticating Public Keys," which is hereby incorporated by reference in its entirety.

The subject matter of this application is also related to the subject matter of U.S. patent application Ser. No. 14/055,606, filed Oct. 16, 2013 in the name of John Nix, entitled "Systems and Methods for 'Machine-to-Machine' (M2M) Communications Between Modules, Servers, and an Application using Public Key Infrastructure (PM)," which is hereby incorporated by reference in its entirety.

The subject matter of this application is also related to the subject matter of U.S. patent application Ser. No. 14/064,618, filed Oct. 28, 2013 in the name of John Nix, entitled "A Set of Servers for "Machine-to-Machine" Communications using Public Key Infrastructure," which is hereby incorporated by reference in its entirety.

BACKGROUND

Technical Field

The present methods and systems relate to communications for a module, and more particularly, to methods and systems for supporting an embedded universal integrated circuit card (eUICC) in a module, where the module can securely and efficiently derive keys for communicating with a server and a wireless network, including shared secret keys and key pairs for use with public key infrastructure (PM).

Description of Related Art

The combination of "machine-to-machine" (M2M) communications and using low-cost sensors, Internet connections, and processors is a promising and growing field. Among many potential benefits, M2M technologies allow the remote monitoring and/or control of people, assets, or a

location where manual monitoring is not economic, or costs can be significantly reduced by using automated monitoring as opposed to manual techniques. Prominent examples today include vending machines, automobiles, alarm systems, and remote sensors. Fast growing markets for M2M applications today include tracking devices for shipping containers or pallets, health applications such as, but not limited to, the remote monitoring of a person's glucose levels or heartbeat, monitoring of industrial equipment deployed in the field, and security systems. Many M2M applications leverage either wired Internet connections or wireless connections, and both types of connections continue to grow rapidly. M2M applications may also be referred to as "the Internet of things".

M2M communications can provide remote control over actuators that may be connected to a M2M device, such as, but not limited to, turning on or off a power switch, locking or unlocking a door, adjusting a speed of a motor, or similar remote control. A decision to change or adjust an actuator associated with an M2M device can utilize one or a series of sensor measurements. An M2M device may also be referred to as a "wireless module" or also simply a module. As one example, if a building or room is too cold, then temperature can be reported to a central server by an M2M device and the server can instruct the M2M device to turn on a switch that activates heat or adjusts a thermostat. As the costs for computer and networking hardware continue to decline, together with the growing ease of obtaining either wired or wireless Internet access for small form-factor devices, the number of economically favorable applications for M2M communications grows.

Many M2M applications can leverage wireless networking technologies. Wireless technologies such as, but not limited to, wireless local area networks and wireless wide area networks have proliferated around the world over the past 15 years, and usage of these wireless networks is also expected to continue to grow. Wireless local area network (LAN) technologies include WiFi and wireless wide area network (WAN) technologies include 3rd Generation Partnership Project's (3GPP) 3rd Generation (3G) Universal Mobile Telecommunications System (UMTS) and 4th Generation (4G) Long-term Evolution (LTE), LTE Advanced, and the Institute of Electrical and Electronics Engineers' (IEEE) 802.16 standard, also known as WiMax. The use of wireless technologies with "machine-to-machine" communications creates new opportunities for the deployment of M2M modules in locations less suitable for fixed-wire Internet access, but also creates a significant new class of problems that need to be solved.

One class of problems for using M2M modules with traditional wireless networks results from basic design considerations for the wireless networks, where many wireless wide-area networking standards were designed and optimized for mobile phones, including smart phones. A core element of traditional wireless WAN technologies such as 3GPP and ETSI standards over the past 20 years has included the use of a subscriber identity module (SIM) card within 2G networks and a related universal integrated circuit card (UICC) for 3G and 4G networks, including LTE networks. ETSI standards for a physical UICC as of 2013 include ETSI TR 102 216. Traditionally, these cards have been supplied by a mobile network operator (MNO) and contain a pre-shared secret key K in addition to a set of parameters for a mobile phone or user equipment to connect with the wireless network operated by the MNO. The parameters could include (i) an identity such as an IMSI, (ii) a set of frequencies for a mobile phone to scan in order to

locate a beacon signal from the MNO, (iii) a preferred access list of other MNOs in order to support roaming in locations where the MNI associated with the IMSI is not available, and (iv) many other related parameters as well. The physical media and cards in the form of a UICC can be appropriate or suitable for a mobile phone or mobile handset, where an end user can readily replace or "swap out" the physical card as the mobile phone changes geographical locations or due to other preferences for the subscriber or end-user. Distributors of either mobile handsets or mobile phone service can physically insert or change an appropriate UICC for the mobile phones as well.

However, the rapid growth for "machine-to-machine" applications has created significant challenges to the traditional model of utilizing physical media such as a UICC in order to provide data and parameters for a module's connectivity to a MNO. Exemplary reasons for potential difficulties with physical media such as a UICC in M2M applications include (i) the modules may be installed in remote locations that are difficult or expensive to reach after installation, such as, but not limited to, tracking devices on shipping containers that can move globally, (ii) a manufacturer or service provider may prefer for the module to be hermetically sealed for business or technical reasons, including the physical UICC may not be easily tampered with, and (iii) a module (such as a tracking device on a 40 foot shipping container) may move between several different countries, and the lowest costs for Internet or data connectivity through the wireless WAN may be through utilizing different UICC cards from different operators, but the cost of swapping the UICC card could be prohibitive.

Other needs for changing a preferred network or network credentials without physically changing a UICC exist as well. These needs have been one motivation for the industry, including ETSI and 3GPP standards bodies, to consider an embedded UICC, also known as an "eUICC". With an eUICC, the operation of an UICC can be essentially "virtualized", such that the data and algorithms within a UICC can be processed in software and distributed through electronic media (such as, but not limited to, a file transfer or file download). Exemplary benefits and technical considerations for using an eUICC in M2M applications as of November 2013 is outlined in ETSI TS 103 383 v12.1, entitled "Smart Cards; Embedded UICC; Requirements Specification," which is herein incorporated by reference in its entirety. Note that this published standard from September 2013, and the standard is primarily in the requirements definition phase, and many of the technical specifications for implementation and operation of an eUICC will be defined in the future.

Although the use of an embedded eUICC can solve many of the issues for distributing and managing physical media such as a UICC, many additional challenges remain. Many open and remaining challenges for a eUICC pertain to securely and electronically transferring a new set of MNO network access credentials (such as an IMSI and network key K) to a module in a secure and efficient manner. A need exists in the art for a module to securely obtain network access credentials. Another need exists in the art for the obtained credentials in a eUICC to be fully compatible with the significant installed and legacy base of networks that use a pre-shared secret key K, where the key K serves as the foundation for authentication and ciphering of data for a mobile phone or user equipment, including modules using conventional technology. A successful solution to these needs for M2M applications in the form of an eUICC can also provide a working solution of the needs for regular mobile phones as well, such that a consumer mobile phone could implement and utilize an eUICC in order to eliminate the costs and complexity of dealing with a physical UICC.

A need exists in the art for module and a mobile network operator to securely share a pre-shared secret key K without depending on physical distribution of the key K or electronic distribution of the key K through 3rd parties, even in an encrypted form. As currently contemplated in November of 2013 by eUICC standards discussed above, a pre-shared secret key K and related network access credentials are transmitted to a module in an encrypted form, including multiple potential layers of encryption and authentication. The pre-shared secret key K is also known as key K in 4G LTE and related networks and key Ki in 3G networks. The resulting security for the electronically transferred, pre-shared secret key K is no stronger than (i) the encryption on the channel used to transfer key K, and (ii) the security and chain of control for keys used to encrypt the communications channel transferring key K to a module or a mobile phone. The MNO using an electronically transferred key K for network access credentials is dependent on the communications channel for transferring key K, even though that communications channel may be outside the control of the MNO (such as at a time when key K is transferred using another MNO or a different network).

In addition, over an extended period of time such as several years, a mobile network operator could prefer for the key K to periodically rotate or change for an individual module or mobile phone in order to increase security. The continued and extended use of a single key K for all communications with a module or mobile phone can be a security risk, especially with a large volume of data transferred that could be subject to analysis for cryptographic weaknesses by potential attackers. Additionally, in the future a standard key length for key K may increase from today's current 128 bits to a longer key length such as an exemplary 256 bits. With conventional technology where key K is recorded in physical media such as a UICC, the only feasible way to change key K for a module or mobile phone is to physically distribute a new UICC card, with resulting costs and business complexities. A need exists in the art for a module, including a mobile phone, and a MNO to securely and efficiently support a change in network access credentials, including a key K for the module connecting to the MNO, without requiring a physical replacement of a UICC or equivalent physical media recording a key K.

And other needs exist in the art as well, as the list recited above is not meant to be exhaustive but rather illustrative.

SUMMARY

Methods and systems are provided for secure and efficient communication using a module to communicate with a server and a mobile operator network. The module can support "Machine to Machine" (M2M) communications, also known as "the Internet of things". The methods and systems contemplated herein can also support other applications as well, including mobile phone handsets connecting to a wireless network, where the wireless network can be associated with or the radio access portion of a mobile operator network. A module in the present invention can comprise a mobile phone such as a smartphone. An objective of the invention is to address the challenges noted above for securing the deployment of modules that can utilize an embedded universal integrated circuit card (eUICC) and/or also PM algorithms and keys. The methods and systems contemplated herein can reduce the need for manual inter-

vention with a module in order to automatically and remotely change network access credentials in order for the module to utilize new or different keys in order to connect and authenticate with a wireless network. By using an eUICC, such as an eUICC supporting the derivation of keys for secure communication of data between a module and a server, the value and usefulness of modules can be increased for a user and a mobile operator network.

Exemplary embodiments may take the form of methods and systems for a module. The module and a server associated with a wireless network or a mobile network operator can include a set of cryptographic algorithms for use in sending and receiving data. The cryptographic algorithms can include asymmetric ciphering algorithms, symmetric ciphering algorithms, secure hash algorithms, digital signature algorithms, key pair generation algorithms, a key derivation function, and a random number generator. The module can utilize a set of cryptographic parameters with the set of cryptographic algorithms. In exemplary embodiments, the module and the server can also include a shared secret algorithm and a secret ciphering algorithm.

The module can utilize the set of cryptographic algorithms and the set of cryptographic parameters to securely generate or derive module private keys and module public keys. A module private key and module public key can be generated either (i) upon manufacturing, distribution, installation, or an initial use of the module, or (ii) at subsequent times after initial use such as when a new set of key pairs are required or are useful for continued operation of the module. A module private key that is loaded into a module by a manufacturer, distributor, technician, or end user can comprise an initial module private key, and a private key that is derived by a module after installation or distribution can comprise a derived module private key. After deriving the module public key and module private key, the module private key can be preferably recorded in a nonvolatile memory within the module.

In a first embodiment, the module can connect with a wireless network operated by a module network operator. The wireless network could comprise a network based upon wireless wide area networking (WAN) standards such as a wireless network that utilizes Long-Term Evolution (LTE) standards, LTE Advanced, or related networks where authentication and encryption of data utilizes conventional technology with a pre-shared secret key K as defined in the wireless network standards. With conventional technology and these exemplary standards-based networks, the pre-shared secret key K is normally recorded in a universal integrated circuit card (UICC) that is distributed to end users for insertion into modules and mobile phones. This physical distribution of a UICC can create challenges and costs for modules supporting M2M applications. For example, with conventional technology the replacement of the UICC in order to connect with a different wireless network can be difficult or incur higher costs than the electronic generation and/or distribution of a profile for an eUICC. The profile can include data for (i) appropriate network access credentials and also (ii) network parameters for connecting a module with a wireless network associated with a mobile operator network. The MNO can process or create data or values in the profile for initial network access credentials and the network parameters. A first exemplary embodiment supports a module using a network module identity to securely change a key K used for authentication without either (i) receiving a new physical UICC or (ii) receiving a new eUICC profile.

In a first exemplary embodiment, the module can store an initial key K in at least one of a physical UICC or a "virtual" UICC in the form of an eUICC. The eUICC can record a profile with the initial key K. The module could receive the physical UICC or the profile for the eUICC with the initial key K from either (i) a manufacturer, distributor, installer, or end user, or (ii) via a network. In the case where the profile for the eUICC is received via a network (which could comprise a different wireless network than the wireless network for the module to use the eUICC profile), the network could be a prior network the module connects with before applying and using the profile for the eUICC. The profile for an eUICC can include the equivalent data that is recorded in a physical UICC, such that the eUICC operating with an activated eUICC profile can provide functionality to a module that is equivalent to a physical UICC. After recording the initial key K and related network access credentials and network parameters, the module can connect and authenticate with the wireless network using the initial key K. The authentication could comprise steps established in standards including sending a network module identity (which could be an IMSI or related identity), receiving a RAND value, inputting the RAND into the UICC or eUICC, receiving a RES value from the UICC or eUICC, and sending the RES to the wireless network.

Either before or after authentication with the wireless network using the initial key K, the module can use the set of cryptographic parameters and the set of cryptographic algorithms to derive a module private key and a module public key, which can comprise a module PM key pair. The module PM key pair could be processed according to a variety of cryptographic algorithms, including the use of RSA-based algorithms and elliptic curve cryptography (ECC) algorithms. In an exemplary embodiment, the module can derive the module PM key pair with ECC algorithms in order to reduce the processing power and bandwidth required, where a similar level of security can be achieved with shorter key lengths using ECC algorithms compared to RSA algorithms. In another embodiment, RSA algorithms can be used to derive the module PM key pair in order to support legacy software and systems that utilize RSA algorithms for public and private keys, and related cryptographic operations including signatures with the digital signature algorithm (DSA). The module can also derive a key K module token using the derived module private key. For embodiments where ECC algorithms are used to derive the module PM key pair, the key K module token can comprise the module public key, although different values for the key K module token can be utilized as well.

Continuing with the first exemplary embodiment, after authentication with the wireless network using the initial key K, the module can send the derived key K module token to the wireless network. The module can send the key K module token to a server associated with or operated by the mobile network operator. The mobile network operator can record that the key K module token is associated with the network module identity, in order to track a plurality of modules and key K module tokens. The module can derive a secret shared network key K using a key derivation function. The key derivation function can use as input the derived module private key, the set of cryptographic parameters, and a key K network token. The key K network token and the set of cryptographic parameters for the key derivation function could be (i) recorded in the UICC or eUICC profile, or (ii) received by the module from the wireless network after connecting with the initial key K. The secret shared network key K can comprise a second key K,

different than the initial key K, for the module to authenticate with the wireless network, and also encrypt/decrypt data with the wireless network. A server operated by a mobile network operator and associated with the wireless network can use the key K module token received from the module to also derive the secret shared network key K.

Continuing with the first exemplary embodiment, after both the module and the server have derived the secret shared network key K, the module can subsequently authenticate with the wireless network using the mutually derived secret shared network key K. The authentication could comprise steps established in standards, including sending the network module identity (including using the same network module identity as with initial key K, although the module could also change the network module identity), receiving a RAND value, inputting the RAND and the derived secret shared network key K into a set of cryptographic algorithms, calculating a RES value using the set of cryptographic algorithms, and sending the RES to the wireless network. Additional keys such as cipher keys, integrity keys, and symmetric ciphering keys can further be derived by both the module and the wireless network using the secret shared network key K and the RAND value. In this manner, a module and a mobile network operator can mutually derive a secret shared network key K instead of requiring the physical or electronic distribution of key K, thereby increasing security and flexibility for communications between a module and a wireless network.

A second exemplary embodiment can support a module changing a key K used to (i) authenticate with a wireless network and (i) cipher/decipher data with a wireless network. The module can change key K without requiring the manual exchange of a UICC or other physical intervention. The module can use an eUICC profile and change key K while using the same eUICC profile. The module, could also comprise a mobile phone such as, but not limited to, a smart phone. The module can include a module identity which is recorded into a read-only or protected address upon manufacturing or distribution of the module. The module can receive eUICC profiles from an eUICC subscription manager. The module can use the module identity to identify the module with the eUICC subscription manager and also an initial private key to authenticate and/or cipher data with the eUICC subscription manager. The eUICC subscription manager can use a server in order to communicate with the module. After connecting with a first network, which could comprise a first wireless WAN, wireless LAN, or wired connection, the module can receive a eUICC profile for an eUICC in the module, where the eUICC profile includes a network module identity and a first key K. The first key K can be a standards-based key K used with wireless networks, and be equivalent to a pre-shared secret key K recorded in physical UICC, and may also be similar or equivalent to an initial key K from the first exemplary embodiment outlined above.

Continuing with this second exemplary embodiment, the module can use the eUICC, the network module identity, and the first key K to authenticate with the wireless network. The authentication could comprise steps established in wireless networking standards including sending a network module identity (which could be an IMSI or related identity), receiving a RAND value, inputting the RAND into the eUICC, receiving a RES value from the eUICC (where the eUICC uses the first key K to calculate the RES), and sending the RES to the wireless network. After authenticating with the wireless network using the first key K, the module can send a key K module token to the wireless network. The key K module token can comprise a number or a string for a module network operator associated with the wireless network to utilize in a key derivation function. Data for the authentication and related steps in this second embodiment can be communicated between a module and a set of servers, where the set of servers are associated with the wireless network and mobile network operator. The wireless network can comprise the radio access portion or segment for the mobile network operator.

Continuing with this second embodiment, after authenticating with the wireless network using the first key K, the module can receive a set of cryptographic parameters. The module can use the received set of cryptographic parameters and a key derivation function in order to derive a second key K. A server associated with the mobile network operator can use the received key K module token, the set of cryptographic parameters, and the key derivation function in order to derive the same second key K. The second key K derived by the module can be recorded in the eUICC profile for the wireless network. The module can disconnect from the wireless network after attaching using the first key K, and then reconnect using the second key K which has now been mutually derived by both the module and the mobile network operator. The module can reconnect using the eUICC, the received eUICC profile, and either (i) the network module identity used with the first key K, or (ii) a second network module identity sent or received by the module after connecting with the first key K. In this manner, a module can change the key K used to authenticate and cipher/decipher data with a wireless network from a first key K to a second key K. This can increase flexibility of the system and reduce costs of physically distributing a new UICC to the module (or electronically sending new eUICC profiles) in order to change a key K. Also note that the second key K does not need to be transmitted, even in an encrypted form through third parties such as an eUICC subscription manager, and thus the security of a system using an eUICC can be increased as well.

A third exemplary embodiment can comprise a method for a module to securely and efficiently send sensor data to a server. The module can include a sensor for automatically collecting data regarding a monitored unit. The module can comprise a wireless module that connects to a wireless network, including a wireless WAN such as a public land mobile network (PLMN). The module and the network can use standards that include Internet Protocol (IP) at the network and transport layers of the open systems interconnection (OSI) stack. The module can record an initial module private key and a module identity in a non-volatile memory, and the initial module private key and module identity could be recorded by a module manufacturer, or the module identity could be recorded by a module manufacturer and a distributor or end user could record the initial module private key. An eUICC subscription manager could also provide the initial module private key. The module manufacturer, distributor, mobile network operator, and/or module provider could operate as an eUICC subscription manager. Upon connecting with a first network, the module can receive a set of cryptographic parameters and a profile for an eUICC from the eUICC subscription manager, and the module can decrypt the profile using the initial module private key.

Continuing with this third exemplary embodiment, the module can derive a module private key and a module public key using the set of cryptographic parameters and a set of cryptographic algorithms. The module can select the received eUICC profile, activate the profile, and authenticate

and connect with a wireless network using the eUICC profile. The module can send a message with the derived module public key and the module identity to a server and the module can authenticate the message using the initial module private key. A server could record or have access to an initial module public key associated with the initial module private key, and the server can use the initial module public key to authenticate the message sent by the module. In this manner of a module using the initial module private key and the server using the initial module public key, the module can authoritatively send the derived module public key, such that a fraudulent or otherwise unauthorized module could not feasibly submit a public key for the module with the module identity. After sending and authenticating the derived module public key, the module can send a sensor measurement with a module identity in a message to the server, and the message could contain a module encrypted data. The module can use the derived module private key to encrypt the module encrypted data. The server can use the received, authenticated module public key to decrypt the module encrypted data. The server can record or forward the sensor data, and the module can repeat the process of collecting sensor data and using the derived module private key to send the sensor data.

In another embodiment, the module may be deployed within a wireless network such as, but not limited to, a 4G LTE network, a LTE Advanced network, or a WiFi network, and the module may comprise a wireless module. After being installed next to a monitored unit, the wireless module can (i) wake from a sleep or dormant state, (ii) utilize a sensor to collect data associated with a monitored unit, (iii) connect to the wireless network using Internet Protocol standards, and (iv) send the sensor data to a server. During an active state, the module can use a UDP IP:port number to both send a message to the server and receive a response to the server. The message as a UDP datagram can be a UDP Lite datagram and with a checksum only applied to the packet header. A UDP Lite datagram with sensor data can include channel coding for the body of the datagram to mitigate the effect of bit errors. In this embodiment, the wireless network can preferably support the UDP Lite protocol.

In exemplary embodiments, a module can use a first module private key and a server can use a first module public key to establish communication between the two nodes. The server can belong to a mobile network operator and be associated with a wireless network. The server can securely send the module a set of cryptographic parameters, where the set of cryptographic parameters includes values to define an equation for an elliptic curve. The values could comprise constants and variables such that the module can calculate an elliptic curve, and the elliptic curve can be different than standard, published curves. The set of cryptographic parameters could be sent from the server to the module in a server encrypted data, where the server encrypted data is decrypted by the module using any of (i) the first module private key, (ii) a symmetric key, and (iii) a shared secret key. The module can use the set of cryptographic parameters, a random number generator, and a key pair generation algorithm within a set of cryptographic algorithms in order to generate a new, second module key pair, which could comprise a second module public key and a second module private key. The module can securely and/or authoritatively send the second module public key to the server, where the steps to implement security for sending the second module public key can include using of the first module public key and/or the shared secret key.

In another embodiment, a module with a module identity can derive its own public and private keys after distribution of the module using a first set of cryptographic parameters. A module can send a message that includes a module identity, where the module identity can be verified using at least one of a module digital signature and a shared secret key. A set of servers can send the module with the module identity a second set of cryptographic parameters, which can be different than the first set of cryptographic parameters. Over time, the module can use at least a subset of the second set of cryptographic parameters to derive multiple pairs of module public and private keys. Over time, the module can (i) send a series of module public keys with the module identity and (ii) use a previous module public key in the series to verify and/or authenticate a message with a module public key sent by the module to the server.

In exemplary embodiments, the module can use a shared secret algorithm in order to derive a shared secret key without sending or receiving the shared secret key. A set of component parameters and an algorithm token can also be input into the shared secret algorithm. A server could record the same component parameters, the same shared secret algorithm, and also receive the algorithm token from the module. The server can derive the same shared secret key as the module. The module and the server can then use the same shared secret key as a symmetric key for symmetric ciphering algorithms, for authentication where both the module and a server mutually authenticate using a message digest and the shared secret key.

These as well as other aspects and advantages will become apparent to those of ordinary skill in the art by reading the following detailed description, with reference where appropriate to the accompanying drawings.

BRIEF DESCRIPTION OF THE DRAWINGS

Various exemplary embodiments are described herein with reference to the following drawings, wherein like numerals denote like entities.

FIG. **1***a* is a graphical illustration of an exemplary system, where a server and a module connect using a wireless network, in accordance with exemplary embodiments;

FIG. **1***b* is a graphical illustration of hardware, firmware, and software components for a module, in accordance with exemplary embodiments;

FIG. **1***c* is a graphical illustration of components within a module, in accordance with exemplary embodiments;

FIG. **1***d* is a graphical illustration of components in a set of cryptographic algorithms, in accordance with exemplary embodiments;

FIG. **1***e* is a graphical illustration of a set of components for a module and a set of component parameters, in accordance with exemplary embodiments; Figure if is a graphical illustration for deriving a shared secret key using a shared secret algorithm, an algorithm token, and component parameters, in accordance with exemplary embodiments;

FIG. **1***g* is a graphical illustration for ciphering and deciphering plaintext using a secret ciphering algorithm with input of ciphertext and a key, in accordance with exemplary embodiments;

FIG. **1***h* is a graphical illustration for deriving a shared secret key and an encrypted module identity, in accordance with exemplary embodiments;

FIG. **1***i* is a graphical illustration of an exemplary system, where a module and a server exchange a set of cryptographic parameters and a subset of the set of cryptographic parameters, in accordance with exemplary embodiments;

FIG. **1***j* is an illustration of a certificate that includes a PM public key, where the key comprises an elliptic curve cryptography (ECC) key, in accordance with exemplary embodiments;

FIG. **1***k* is a graphical illustration of hardware, firmware, and software components for a server, in accordance with exemplary embodiments;

FIG. **1***m* is a graphical illustration of components within a server, in accordance with exemplary embodiments;

FIG. **2** is a graphical illustration of an exemplary system, where a module sends a message to a server, and where the module receives a response to the message, in accordance with exemplary embodiments;

FIG. **3***a* is a flow chart illustrating exemplary steps for a module to send sensor data to a server, in accordance with exemplary embodiments;

FIG. **3***b* is a graphical illustration of components within a received profile and an activated profile for an embedded universal integrated circuit card (eUICC), in accordance with exemplary embodiments;

FIG. **4** a is a flow chart illustrating exemplary steps for a module to process a message, including encrypting sensor data and sending a digital signature, in accordance with exemplary embodiments;

FIG. **5***a* a is a flow chart illustrating exemplary steps for a module to process a response from the server, including verifying a server's identity and decrypting instructions, in accordance with exemplary embodiments;

FIG. **5***b* is a flow chart illustrating exemplary steps for a module to communicate with a server, including the module deriving public and private keys, in accordance with exemplary embodiments;

FIG. **6** is a simplified message flow diagram illustrating an exemplary message sent by a module, and an exemplary response received by the module, in accordance with exemplary embodiments;

FIG. **7** is a flow chart illustrating exemplary steps for a module to derive a series of public keys and private keys, including sending and authenticating the derived public keys, in accordance with exemplary embodiments;

FIG. **8** is a simplified message flow diagram illustrating an exemplary message sent by a module, wherein the message includes a derived module public key, in accordance with exemplary embodiments;

FIG. **9***a* is a flow chart illustrating exemplary steps for a module to use a shared secret key to authenticate with a server, in accordance with exemplary embodiments;

FIG. **9***b* is a flow chart illustrating exemplary steps for a module to derive a shared secret key K using a derived module PM key, in accordance with exemplary embodiments;

FIG. **10** is a simplified message flow diagram illustrating an exemplary system with exemplary data transferred between a module and a set of servers, in accordance with exemplary embodiments;

FIG. **11** is a graphical illustration for a module and a network to mutually derive a shared secret key K, in accordance with exemplary embodiments.

DETAILED DESCRIPTION OF EXEMPLARY EMBODIMENTS OF THE INVENTION

FIG. **1***a*

FIG. **1***a* is a graphical illustration of an exemplary system, where a server and a module connect over a wireless network, in accordance with exemplary embodiments. The system **100** includes a module **101** operating within a wireless network **102**. System **100** can also include a module provider **109**, an IP Network **107**, and a mobile network operator **108**, a certificate authority **118**, and a monitored unit **119**. Mobile network operator (MNO) **108** can include a server **105**. For embodiments where the MNO **108** uses 4G LTE and LTE Advanced networks, server **105** could comprise a home subscriber server (HSS). Server **105** could be a server with related functionality for a MNO **108** that uses different wireless network standards than those based on 4G LTE. System **100** is illustrated without specific packet transmissions between module **101** and mobile network operator **108**. Examples of the communications and messages pertaining to the present invention will be illustrated in later Figures. As contemplated herein, machine-to-machine communications may comprise communication between a module **101** and a server **105**, such that data can be transferred between the two with minimal manual intervention, although manual intervention can be required to set up system **100** and any occasional manual maintenance required. As contemplated herein, machine-to-machine communications may also be referred to as "the Internet of things" (IoT). Also note that module **101** may comprise a wireless module, such that module **101** can communicate with wireless network **102** using a radio and an antenna. A wireless or a wired configuration for module **101** can be utilized in the present invention.

If module **101** operates as a wireless module, module **101** and wireless network **102** can communicate using a base station **103**. Module **101** and wireless network **102** can utilize a variety of wireless technologies to communicate, including WiFi, WiMax, a 2nd generation wireless wide area network (WAN) technology such as, but not limited to, General Packet Radio Services (GPRS) or Enhanced Data rates for GSM Evolution (EDGE), 3rd Generation Partnership Project (3GPP) technology such as, but not limited to, 3G, 4G LTE, or 4G LTE Advanced, and other examples exist as well. A wired module **101** can connect to the IP Network **107** via a wired connection such as, but not limited to, an Ethernet, a fiber optic, or a Universal Serial Bus (USB) connection (not shown).

Generally, the communication techniques described herein can be independent of the network technologies utilized at the physical and data-link layers, so long as the underlying network provides access to the IP Network **107** and supports Internet Protocols (IP). The IP Network **107** can be an IPv4 or an IPv6 packet-switched based network that utilizes standards derived from the Internet Engineering Task Force, such as, but not limited to, RFC 786 (User Datagram Protocol), RFC 793 (Transmission Control Protocol), and related protocols. The IP Network **107** can be the public Internet comprising globally routable IP addresses, or a private network that utilizes private IP addresses. IP Network **107** as illustrated in FIG. **1***a* could comprise the globally routable public Internet, or IP Network **107** could also be a private Internet that is (i) not globally routable and (ii) only accessible to authorized modules and servers. As one example of a private IP Network **107**, IP Network **107** could use private IP addresses for nodes on the network, and in this case IP Network **107** could be referred to as an intranet or private network. Alternatively, IP Network **107** could be a private network layered on top of the publicly routable Internet via secured and encrypted connections. The specific numbers for IP addresses and port numbers shown in FIG. **1***a* and other figures are illustrative and any valid IP address or port number can be used, including an IPv4 and an IPv6 address. Server **105** within mobile network operator **108** can communicate with the module **101** using IP

network **107**, where IP network **107** can comprise a private network that utilizes Internet Protocol standards. Module **101** can access the public Internet after authenticating with the server **105** associated with the MNO **108**.

When operating in a wireless network configuration, module **101** can access the IP Network **107** via the wireless network **102**. In the wireless network configuration, module **101** can be a wireless handset, a cellular phone, a smartphone, a tablet computer, a laptop, a computer with a radio, a tracking device, or a circuit board with a radio that accesses wireless network **102**. Examples of wireless modules that utilize a wireless WAN such as, but not limited to, 2G and 3G networking technologies include the Motorola® G24-1 and Huawei® MC323. Example manufacturers of wireless modules in 2012 include Sierra Wireless® and Telit®. Example leading manufacturers of mobile phones in 2013 include Apple® and Samsung®. In a wired configuration (not shown), module **101** can be a computer, security camera, security monitoring device, networked controller, etc. A more detailed depiction of exemplary components of a module **101** is included in FIG. **1***b* and FIG. **1***c* below. Module **101** could also comprise a "point of presence" payment terminal, such that a sensor **101***f* associated with module **101** could collect payment information such as, but not limited to, an account number from a credit card or similar payment card. Module **101** could communicate with the payment card via a magnetic reader or near-field wireless communications, and in this case the magnetic reader or antenna for near-field communications can function as a sensor. Module **101** could also operate as a "smartcard" such that an end user presents module **101** to merchants for payments.

Wireless network **102** may comprise either a wireless local area network (LAN) or a wireless WAN such as a public land mobile network (PLMN). Examples for technologies used in wireless LANs include an 802.11 WLAN, Bluetooth, or Zigbee among other possibilities. Module **101** operating in wireless mode could communicate with a base station **103** of a wireless network **102** using a radio and an antenna. Wireless network **102** could operate as a Mode II device according to FCC Memorandum Opinion and Order (FC-12-36) and related white space regulation documents. If module **101** supports IEEE 802.15.4, then wireless network **102** could be a Zigbee network, an ISA100.11a standards-based network, or a 6LoWPAN network as described by IETF RFC 4944. Other possibilities exist as well for the wireless technology utilized by a wireless network **102** and module **101**, operating in a wireless mode, without departing from the scope of the present invention.

Module **101** can collect data regarding a monitored unit **119** and periodically report status to a mobile network operator **108** or a server **105**. Examples of a monitored unit **119** can include a vending machine, an alarm system, an automobile or truck, a standard 40-foot or 20-foot shipping container, or industrial equipment such as, but not limited to, a transformer on an electrical grid or elevator in a building. Additional examples of a monitored unit **119** include can also include a pallet for shipping or receiving goods, an individual box of pharmaceuticals, a health monitoring device attached to a person such as, but not limited to, a pacemaker or glucose monitor, and a gate or door for opening and closing. Other examples exist as well without departing from the scope of the present invention. Module **101** can utilize a sensor to measure and collect data regarding a parameter of monitored unit **119** such as, but not limited to, temperature, physical location potentially including geographical coordinates from a Global Positioning System (GPS) receiver, radiation, humidity, surrounding light levels, surrounding RF signals, weight, vibration and/or shock, voltage, current, and/or similar measurements.

As illustrated in FIG. **1***a*, wireless network **102** may include a wireless network firewall **104** and mobile network operator **108** may include a server network firewall **124**. These firewalls may be used to secure communication at the data link, network, transport, and/or application layers of communications using the IP Network **107**. Firewalls **104** and **124** could perform network address translation (NAT) routing or operate as symmetric firewalls, and/or selectively filter packets received through IP Network **107** in order to secure system **100**. The firewall functionality of firewalls **104** and **124** could be of many possible types, including a symmetric firewall, a network-layer firewall that filters inbound packets according to pre-determined rules, an application-layer firewall, or a NAT router, as examples. Firewalls **104** and **124** could also implement an IPSec tunnel between the two firewalls. Although a single firewall **104** and **124** is illustrated in wireless network **102** (or a wired network **102** or simply "network **102**") and with mobile network operator **108**, respectively, firewall **104** and **124** may each comprise multiple firewalls that operate in conjunction and the combined operation may be considered a single firewall **104** and **124**, respectively.

According to a preferred exemplary embodiment, module **101** may preferably record a module private key **112**. As described in additional figures below, module **112** can generate a key pair comprising a module private key **112** and a module public key **111**, where module private key **112** resides within module **101** and may not be shared or transmitted to other parties. Alternatively, the present invention also contemplates that module **101** does not derive its own module private key **112**, and rather module private key **112** can be securely loaded or transmitted to module **101**, and in this case the loaded module private key **112** can comprise an initial module private key **112***b*. Module **101** may also be associated with a module provider **109**. Module provider **109** could be a manufacturer or distributor of module **101**, or may also be the company that installs and services module **101** or associates module **101** with monitored unit **119**. Module provider **109** can record a module public key **111** and a certificate **122** (illustrated below in FIG. **1***j*) for module **101**. Module public key **111** may be associated with a module public key identity **111***a*, which could be an identifier of module public key **111**.

Either module provider **109** or mobile network operator **108** could function as a eUICC subscription manager **164**, where an eUICC subscription manager **164** can manage the recording and secure distribution of eUICC profiles to a module **101**. Other entities could operate as an eUICC subscription manager **164** as well. An eUICC subscription manager is described in ETSI TS 103 383 v12.1, entitled "Smart Cards; Embedded UICC; Requirements Specification," which is herein incorporated by reference in its entirety. An eUICC subscription manager **164** can also use a server **105** and record private keys and public keys for the server/subscription manager operation. In embodiments, eUICC subscription manager **164** can use a module public key **111** to cipher an eUICC profile (such as, but not limited to, a received eUICC profile **311** depicted and described in connection with FIG. **3***b* below), such that only module **101** with module public key **111** could reasonably decipher the eUICC profile. In this manner, the eUICC profile **311** can remain reasonably secured. The eUICC subscription manager **164** can use either symmetric ciphering **141***b* or asymmetric ciphering **141***a* to encrypt the eUICC profile. The

module public key **111** used by an eUICC subscription manager **164** can comprise an initial module public key **111***b*, where the initial module public key **111***b* can be derived outside module **101** and loaded into module **101**. Or, the eUICC subscription manager **164** can use a module public key **111** derived by the module **101** (such that derived module public key **111** has been transferred to the eUICC subscription manager **164** in a secure and reliably manner).

In embodiments, a module **101** may utilize multiple module public keys **111** over the lifetime of module **101** (including multiple corresponding module private keys **112**), and module public key identity **111***a* can be used to select and/or identify the correct module public key **111**. Module public key identity **111***a* could be a string or sequence number uniquely associated with module public key **111** for a given module **101** (i.e. module public key identity **111***a* does not need to be globally unique). As illustrated in FIG. **1***a*, module public key identity **111***a* may preferably not be included in the string or number comprising module public key **111**, but rather associated with the string or number comprising module public key **111**, and in this case the two together (module public key identity **111***a* and the string or number for module public key **111**) can refer to module public key **111** as contemplated herein. In addition, module **101** can record an initial module private key **112***b* and an initial module public key **111***b*. These initial keys can be different from a module private key **112** and a module public key **111** since the "initial" keys can be derived from an outside source and loaded into a module **101**, and module private key **112** and module public key **111** can be derived by module **101**.

The module public key **111** can optionally be signed by a certificate authority **118** in order to confirm the identity of module **101** and/or the identity of module provider **109**. Module provider **109** can also function as a certificate authority **118** for module **101**. Thus, the validity of module public key **111**, possibly recorded in a certificate **122** (illustrated in FIG. **1***j*) could be checked with module provider **109**, and the wireless module provider's **109** provider public key **120** could be checked against certificate authority **118**. Other configurations for signing public keys and using certificates with public keys are possible as well without departing from the scope of the present invention.

Public keys and private keys as contemplated in the present invention, including module public key **111** and module private key **112** and additional keys described herein, may leverage established standards for Public Key Infrastructure (PM). Public keys may be formatted according to the X.509 series of standards, such as, but not limited to, X.509 v3 certificates, and subsequent or future versions, and these keys may be considered cryptographic keys. The keys can support standards such as, but not limited to, the International Organization for Standardization (ISO) ISO/IEC 9594 series of standards (herein incorporated by reference) and the Internet Engineering Task Force (IETF) RFC 5280 titled "Internet X.509 Public Key Infrastructure Certificate and Certificate Revocation List (CRL) Profile" (herein incorporated by reference), including future updates to these standards.

Module public key **111** and module private key **112**, as well as the other private and public keys described within the present invention, could be generated using standard software tools such as, but not limited to, Openssl, and other tools to generate public and private keys exist as well. Public and private keys as contemplated herein could be recorded in a file such as, but not limited to, a *.pem file (Privacy-enhanced Electronic Mail), a file formatted according to Basic Encoding Rules (BER), Canonical Encoding Rules (CER), or Distinguished Encoding Rules (DER), or as text or binary file. Other formats for public and private keys may be utilized as well, including proprietary formats, without departing from the scope of the present invention. As contemplated herein, a key may also comprise a public key, a private key, or a shared key including a secret shared key. A public key as contemplated herein may also be considered a certificate or a public certificate. A private key as contemplated herein may also be considered a secret key.

Server **105** can include a module database **105***k*, and server **105** will also be described in additional detail below in FIG. **1***k* and FIG. **1***m*. Server **105** can operate as an HSS in 4G LTE networks, including recording network access credentials **314** (described in FIG. **3***b* below) for a plurality of modules **101** in a module database **105***k*. Server **105** could be a plurality of individual computers operating in a coordinated manner through a network in order to function as a server **105**. Server **105** can include a server public key **114** and a server private key **105***c*. Mobile network operator **108** can also include a network private key **165***a* and a network public key **165***b*. Additional details regarding the various public and private keys illustrated in FIG. **1***a* will be provided in Figures below.

Other configurations besides the one illustrated in FIG. **1***a* are possible as well. Wireless network **102** could be included in mobile network operator **108**. In many common commercial relationships for the operation of mobile phone service in the United States in 2013, wireless network **102** could represent a portion of the radio access network used by a mobile network operator **108**. MNO **108** could outsource the operation and maintenance of a radio access network, such as a wireless network **102**, to 3rd parties. In this configuration, wireless network **102** could represent a network operated by a first company specializing in the operation of radio towers and BTS equipment. This first company could be contracted with the mobile network operator **108** in order to support mobile phone service or data services to modules **101**.

In addition, server **105** could reside within wireless network **102** in a data center managed by wireless network **102**. Wireless network **102** could also operate as a module provider **109**. Although a single module **101**, server **105**, wireless network **102**, and mobile network operator **108** are illustrated in FIG. **1***a*, system **100** could comprise a plurality of each of these elements. Module **101** could also record sensor data pertaining to a plurality of monitored units **119**. Module **101** could be mobile, such as physically attached to a truck or a pallet, and module **101** could connect to a series of different wireless networks **102** or base stations **103** as module **101** moves geographically. Other configurations are possible as well for the elements illustrated in FIG. **1***a* without departing from the scope of the present invention.

FIG. **1***b*

FIG. **1***b* is a graphical illustration of hardware, firmware, and software components for a module, in accordance with exemplary embodiments. FIG. **1***b* is illustrated to include many components that can be common within a module **101**, and module **101** may also operate in a wireless configuration in order to connect with a wireless network **102**. Module **101** may consist of multiple components in order to collect sensor data or control an actuator associated with a monitored unit **119**. In a wireless configuration, the physical interface **101***a* of module **101** may support radio-frequency (RF) communications with networks including a wireless network **102** via standards such as, but not limited to, GSM, UNITS, mobile WiMax, CDMA, LTE, LTE Advanced,

and/or other mobile-network technologies. In a wireless configuration, the physical interface **101***a* may also provide connectivity to local networks such as, but not limited to, 802.11 WLAN, Bluetooth, or Zigbee among other possibilities. In a wireless configuration, module **101** could use a physical interface **101***a* be connected with both a wireless WAN and wireless LAN simultaneously. In a wired configuration, the physical interface **101***a* can provide connectivity to a wired network such as, but not limited to, through an Ethernet connection or USB connection.

The physical interface **101***a* can include associated hardware to provide the connections such as, but not limited to, radio-frequency (RF) chipsets, a power amplifier, an antenna, cable connectors, etc., and additional exemplary details regarding these components are described below in FIG. **1***c*. Device driver **101***g* can communicate with the physical interfaces **101***a*, providing hardware access to higher-level functions on module **101**. Device drivers **101***g* may also be embedded into hardware or combined with the physical interfaces. Module **101** may preferably include an operating system **101***h* to manage device drivers **101***g* and hardware resources within module **101**. The operating systems described herein can also manage other resources such as, but not limited to, memory and may support multiple software programs operating on module **101** or server **105**, respectively, at the same time. The operating system **101***h* can include Internet protocol stacks such as, but not limited to, a User Datagram Protocol (UDP) stack, Transmission Control Protocol (TCP) stack, a domain name system (DNS) stack, etc., and the operating system **101***h* may include timers and schedulers for managing the access of software to hardware resources. The operating system shown of **101***h* can be appropriate for a low-power device with limited memory and CPU resources (compared to a server **105**). An example operating system **101***h* for module **101** includes Linux, Android® from Google®, Windows® Mobile, or Open AT® from Sierra Wireless®. Additional example operating systems **101***h* for module **101** include eCos, uC/OS, LiteOs, and Contiki, and other possibilities exist as well without departing from the scope of the present invention.

A module program **101***i* may be an application programmed in a language such as, but not limited to, C, C++, Java, and/or Python, and could provide functionality to support M2M applications such as, but not limited to, remote monitoring of sensors and remote activation of actuators. Module program **101***i* could also be a software routine, subroutine, linked library, or software module, according to one preferred embodiment. As contemplated herein, a module program **101***i* may be an application operating within a smartphone, such as, but not limited to, an iPhone® or Android®-based smartphone, and in this case module **101** could comprise the smartphone. The application functioning as a module program **101***i* could be downloaded from an "app store" associated with the smartphone. Module program **101***i* can include data reporting steps **101***x*, which can provide the functionality or CPU **101***b* instructions for collecting sensor data, sending messages to server **105**, and receiving responses from server **105**, as described in the present invention.

Many of the logical steps for operation of module **101** can be performed in software and hardware by various combinations of sensor **101***f*, actuator **101***y*, physical interface **101***a*, device driver **101***g*, operating system **101***h*, module program **101***i*, and data reporting steps **101***x*. When module **101** is described herein as performing various actions such as acquiring an IP address, connecting to the wireless network, monitoring a port, transmitting a packet, sending a message, receiving a response, or encrypting or signing data, specifying herein that module **101** performs an action can refer to software, hardware, and/or firmware operating within module **101** illustrated in FIG. **1***b* or FIG. **1***c* performing the action. Note that module **101** may also optionally include user interface **101***j* which may include one or more devices for receiving inputs and/or one or more devices for conveying outputs. User interfaces are known in the art and generally are simple for modules such as, but not limited to, a few LED lights or LCD display, and thus user interfaces are not described in detail here. User interface **101***j* could comprise a touch screen if module **101** operates as a smartphone or mobile phone. As illustrated in FIG. **1***b*, module **101** can optionally omit a user interface **101***j*, since no user input may be required for many M2M applications, although a user interface **101***j* could be included with module **101**.

Module **101** may be a computing device that includes computer components for the purposes of collecting data from a sensor **101***f* or triggering an action by an actuator **101***y*. Module **101** may include a central processing unit (CPU) **101***b*, a random access memory (RANI) **101***e*, and a system bus **101***d* that couples various system components including the random access memory **101***e* to the processing unit **101***b*. The system bus **101***d* may be any of several types of bus structures including a memory bus or memory controller, a peripheral bus, and a local bus using any of a variety of bus architectures including a data bus. Note that the computer components illustrated for the module **101** in FIG. **1***b* may be selected in order to minimize power consumption and thereby maximize battery life, if module **101** includes a battery and is not attached to external power. In addition, the computer components illustrated for the module **101** in FIG. **1***b* may also be selected in order to optimize the system for both long periods of sleep or idle states relative to active communications and also may be optimized for predominantly uplink (i.e. device to network) communications with small packets or messages. The computer components illustrated for the module **101** in FIG. **1***b* may also be general-purpose computing components, and specialized components are not required in order to utilize many of the embodiments contemplated herein.

Module **101** may include a read-only memory (ROM) **101***c* which can contain a boot loader program. Although ROM **101***c* is illustrated as "read-only memory", ROM **101***c* could comprise long-term memory storage chipsets or physical units that are designed for writing once and reading many times. As contemplated within the present invention, a read-only address could comprise a ROM **101***c* memory address or another hardware address for read-only operations accessible via bus **101***d*. Changing data recorded in a ROM **101***c* can require a technician have physical access to module **101**, such as, but not limited to, removing a cover or part of an enclosure, where the technician can subsequently connect equipment to a circuit board in module **101**, including replacing ROM **101***c*. ROM **101***c* could also comprise a nonvolatile memory, such that data is stored within ROM **101***c* even if no electrical power is provided to ROM **101***c*. Although not illustrated in FIG. **1***b*, but illustrated in FIG. **1***c* below, module **101** could also include a flash memory **101***w*. Module program **101***i*, data reporting steps **101***x*, operating system **101***h*, or device driver **101***g* could be stored in flash memory **101***w* within module **101** when the module is powered off. These components and/or instructions could be moved from a flash memory **101***w* (not shown in FIG. **1***b* but shown in FIG. **1***c*) into RAM **101***e* when the module is

powered on. Note that ROM **101***c* could be optionally omitted or included in a memory unit within CPU **101***b* (not shown).

Although the exemplary environment described herein employs ROM **101***c* and RAM **101***e*, it should be appreciated by those skilled in the art that other types of computer readable media which can store data that is accessible by a module **101**, such as, but not limited to, memory cards, subscriber identity module (SIM) cards, local miniaturized hard disks, and the like, may also be used in the exemplary operating environment without departing from the scope of the invention. The memory and associated hardware illustrated in FIG. **1***b* provide nonvolatile storage of computer-executable instructions, data structures, program modules, module program **101***i*, and other data for computer or module **101**. Note the module **101** may include a physical data connection at the physical interface **101***a* such as, but not limited to, a miniaturized universal serial bus adapter **101***v* (illustrated in FIG. **1***c*), firewire, optical, or other another port. The computer executable instructions such as, but not limited to, module program **101***i*, data reporting steps **101***x*, operating system **101***h*, or device driver **101***g* can be initially loaded into memory such as, but not limited to, ROM **101***c* or RAM **101***e* through the physical interface **101***a* before module **101** is given to an end user, shipped by a manufacturer to a distribution channel, or installed by a technician. In addition, the computer executable instructions such as, but not limited to, module program **101***i*, data reporting steps **101***x*, operating system **101***h* or device driver **101***g* could be transferred wirelessly to module **101**. In either case (wired or wireless transfer of computer executable instructions), the computer executable instructions such as module program **101***i*, data reporting steps **101***x*, operating system **101***h*, or device driver **101***g* could be stored remotely on a disk drive, solid state drive, or optical disk (external drives not shown).

A number of program modules may be stored in RAM **101***e*, ROM **101***c*, or possibly within CPU **101***b*, including an operating system **101***h*, device driver **101***g*, an http client (not shown), a DNS client, and related software. Further, the module program **101***i* and/or data reporting steps **101***x* can perform the various actions described in the present invention for the module **101** through instructions the module program **101***i* and/or data reporting steps **101***x* provide to the CPU **101***b*. A user may enter commands and information into module **101** through an optional user interface **101***j*, such as a keypad, keyboard (possibly miniaturized for a mobile phone form-factor), and a pointing device. Pointing devices may include a trackball, an electronic pen, or a touch screen. A user interface **101***j* illustrated in FIG. **1***b* can also comprise the description of a user interface **101***j* within U.S. patent application Ser. No. 14/039,401, filed Sep. 27, 2013 in the name of John Nix, which is herein incorporated in its entirety.

The module **101**, comprising a computer, may operate in a networked environment using logical connections to one or more remote computers, such as the server **105** illustrated in FIG. **1***a*. Server **105** can also function as a general purpose server to provide files, programs, disk storage, remote memory, and other resources to module **101** usually through a networked connection. Additional details regarding server **105** are provided in FIG. **1***k* and FIG. **1***m* below. Additional remote computers with which module **101** communicates may include another module **101** or mobile device, an M2M node within a capillary network, a personal computer, other servers, a client, a router, a network PC, a peer device, a base station **103**, or other common network node. It will be appreciated that the network connections shown throughout the present invention are exemplary and other means of establishing a wireless or wired communications link may be used between mobile devices, computers, servers, corresponding nodes, and similar computers.

The module program **101***i* and data reporting steps **101***x* operating within module **101** illustrated in FIG. **1***b* can provide computer executable instructions to hardware such as CPU **101***b* through a system bus **101***d* in order for a module **101** to (i) collect data from a sensor, (ii) change the state of an actuator **101***y*, and (iii) send or receive packets with a server **105**, thus allowing server **105** to remotely monitor or control a monitored unit **119**. The module program **101***i* and/or data reporting steps **101***x* can enable the module **101** to transmit or send data from sensor **101***f* or module **101** by recording data in memory such as RAM **101***e*, where the data can include sensor data, a destination IP:port number, a packet or packet header value, an encryption or ciphering algorithm and key, a digital signature algorithm and key, etc. The data recorded in RAM **101***e* can be subsequently read by the operating system **101***h* or the device driver **101***g*. The operating system **101***h* or the device driver **101***g* can write the data to a physical interface **101***a* using a system bus **101***d* in order to use a physical interface **101***a* to send data to a server **105** using the IP Network **107**. Alternatively, the module program **101***i* and/or data reporting steps **101***x* can write the data directly to the physical interface **101***a* using the system bus **101***d*.

The module program **101***i* and/or data reporting steps **101***x*, or operating system **101***h* can include steps to process the data recorded in memory such as, but not limited to, encrypting data, selecting a destination address, or encoding sensor data acquired by (i) a sensor **101***f* or (ii) through a physical interface **101***a* such as, but not limited to, a thermocouple, shock or vibration sensor, light sensor, or global positioning system (GPS) receiver, etc. The module **101** can use the physical interface **101***a* such as, but not limited to, a radio to transmit or send the data from a sensor to a base station **103**. For those skilled in the art, other steps are possible as well for a module program **101***i* or operating system **101***h* to collect data from a sensor **101***f* and send the data in a packet without departing from the scope of the present invention.

Conversely, in order for module **101** to receive a packet or response from server **105**, the physical interface **101***a* can use a radio to receive data from a base station **103**. The received data can include information from a server **105** and may comprise a datagram, a source IP:port number, a packet or header value, an instruction for module **101**, an acknowledgement to a packet that module **101** sent, a digital signature, and/or encrypted data. The operating system **101***h* or device driver **101***g* can use a system bus **101***d* and CPU **101***b* to record the received data in memory such as RAM **101***e*, and the module program **101***i* or operating system **101***h* may access the memory in order to process the received data and determine the next step for the module **101** after receiving the data. The steps within this paragraph may also describe the steps a module program **101***i* or data reporting steps **101***x* can perform in order to receive a packet or a response **209** below. For those skilled in the art, other steps are possible as well for a module program **101***i*, data reporting steps **101***x*, or module **101** to receive a packet or response from a server **105** within the scope of the present invention.

Moreover, those skilled in the art will appreciate that the present invention may be implemented in other computer system configurations, including hand-held devices, netbooks, portable computers, multiprocessor systems, micro-

processor based or programmable consumer electronics, network personal computers, minicomputers, mainframe computers, and the like. The invention may also be practiced in distributed computing environments, where tasks are performed by remote processing devices that are linked through a communications network. In a distributed computing environment, program modules may be located in both local and remote memory storage devices. In addition, the terms "mobile node", "mobile station", "mobile device", "M2M module", "M2M device", "networked sensor", or "industrial controller" can be used to refer to module **101** or its functional capabilities of (i) collecting sensor data regarding a monitored unit **119**, (ii) changing state of an actuator **101***y* associated with monitored unit **119**, and/or (iii) communicating the data associated with a monitored unit **119** with a wireless network **102**. The function of module **101** and sensor **101***f* could be integrated, and in this case module **101** could also be referred to as a "sensor", "intelligent sensor", or "networked sensor". Further, the term "module" or "monitoring device" can be used to refer to the module program **101***i* when module program **101***i* provides functional capabilities such as reporting data from a sensor **101***f* to a server **105** or receiving instructions for an actuator **101***y* from a server **105**. Other possibilities exist as well for the configuration or combination of components illustrated in FIG. **1***b* without departing from the scope of the present invention.

FIG. **1***c*

FIG. **1***c* is a graphical illustration of components within a module, in accordance with exemplary embodiments. FIG. **1***c* is illustrated to show a combination of components useful for leveraging the efficient and secure communication techniques described in the present invention. In addition to the components illustrated in FIG. **1***b* above, module **101** can include a an eUICC **163**, a battery **101***k*, a server public key **114**, a wireless module private key **112**, a connection to an actuator **101***y*, a USB interface **101***v*, a CPU wake controller **101***u*, a flash memory **101***w*, a symmetric key **127**, a pre-shared secret key **129**, a random number generator **128**, cryptographic algorithms **141**, a radio **101***z*, and other components illustrated in FIG. **1***c*. Not all of the components illustrated in FIG. **1***c* are required for many exemplary embodiments, and some of the components illustrated in FIG. **1***c* may also be optionally omitted in some exemplary embodiments.

The CPU **101***b* can comprise a general purpose processor appropriate for the low power consumption requirements of a module **101**, and may also function as a microcontroller. A CPU **101***b* and a CPU wake controller **101***u* are depicted and described in connection with FIG. **1***b* of U.S. patent application Ser. No. 14/055,606, filed Oct. 16, 2013 in the name of John Nix, entitled "Systems and Methods for 'Machine-to-Machine' (M2M) Communications Between Modules, Servers, and an Application using Public Key Infrastructure (PM)," which is hereby incorporated by reference in its entirety. Clock **160** can comprise a crystal oscillator generating sine or square wave outputs at a frequency to drive a system bus **101***d*, CPU **101***b*, and RAM **101***e*, in addition to other functionality. In exemplary embodiments, clock **160** can comprise a temperature-compensated crystal oscillator (TCXO), a voltage-controlled crystal oscillator (VCXO), or a voltage-controlled temperature-compensated crystal oscillator (VCTCXO), and other possibilities exist as well. Clock **160** could include circuits and logic to keep time while module **101** is both in an active state and a dormant state.

An eUICC **163** within module **101** can comprise an embedded universal integrated circuit card **163**. An eUICC **163** can provide the equivalent functionality as physical UICC, where definitions for a physical UICC are included in ETSI TR 102 216 and ETSI TS 102 221 V11.0.0. An eUICC **163** in FIG. **1***c* can support exemplary requirements for an eUICC outlined in ETSI TS 103 383 v12.2, entitled "Smart Cards; Embedded UICC; Requirements Specification," which is herein incorporated by reference in its entirety. An eUICC **163** as illustrated in FIG. **1***c* can be implemented within module **101** in several different ways, including (i) as a module program **101***i* recorded in a nonvolatile memory, such as, but not limited to, either flash memory **101***w* or ROM **101***c*, (ii) firmware within CPU **101***b* or another specialized processing unit within module **101**, (iii) a physical UICC within module **101** that contains the eUICC **163**, or (iv) a specialized circuit within a surface mount package that is soldered directly onto a circuit board of the module **101**, including an 8-lead small outline non-leaded (SON-8) package. For the embodiment where an eUICC **163** comprises a module program **101***i*, the eUICC **163** could be loaded and installed within nonvolatile memory **101***w* in module **101** using the steps and procedures described for a module program **101***i* in FIG. **1***b*. Other possibilities exist as well for the physical implementation of an eUICC **163** within a module **101** without departing from the scope of the present invention. An eUICC **163** may also be referred to as an "electronic UICC", an "electronic SIM" (eSIM), or an "embedded SIM" (also eSIM).

For embodiments where an eUICC **163** can be loaded into a RAM **101***e* or flash **101***w* memory, a CPU **101***b* could designate the RAM **101***e* or flash **101***w* memory containing the instructions and data for an eUICC **163** to be a protected memory. When (i) loaded with appropriate data (such as, but not limited to an activated eUICC profile **313** described in FIG. **3***b* below), and (ii) a profile for a MNO **108** is selected and activated, then an eUICC **163** can provide the equivalent functionality of a physical UICC. The eUICC **163**, using an activated eUICC profile **313**, can provide the module **101** with (i) network access credentials **314**, and (ii) network parameters **310** in order to connect with wireless network **102**. The eUICC **163**, using an activated eUICC profile **313**, can record a secret shared network key K (described in FIGS. **9***b* and **11** below and related Figures) and also a network module identity **110***b* (described in FIG. **3***b* below and related Figures). The eUICC **163** can support standard steps by module **101** for network authentication contemplated in 3GPP TS 33.401 V12.9.0 and related standards, including inputting a RAND **912** (depicted and described in FIG. **9***b*) and outputting an RES **913** (also depicted and described in FIG. **9***b*).

According to an exemplary embodiment, an eUICC **163** can be recorded and operate within a "eUICC supporting" physical universal integrated circuit card (UICC) **166** within module **101**. This "eUICC supporting", physical UICC **166** can include a processing unit, RAM memory, ROM memory, EEPROM memory, a bus, and a physical interface in order to support a profile activation **316** of multiple different received eUICC profiles **311** (where profile activation **316** and profile **311** are in FIG. **3***b* below). The processing unit, RAM memory, ROM memory, EEPROM memory, and bus in an "eUICC supporting" UICC **166** could comprise smaller versions with similar or equivalent functionality of the CPU **101***b*, RAM **101***e*, ROM **101***c*, flash memory **101***w*, and bus **101***d*, respectively, depicted and described in FIG. **1***b* below for a module **101**. In other words, a module **101** could include a connection and slot for a physical UICC card, and (i) a manufacturer, distributor, or

end user could load an "eUICC supporting" UICC **166** into the slot, and (ii) the eUICC **163** could operate on the physical UICC.

The physical form-factor for an "eUICC supporting" UICC **166** could be identical to a UICC, and a difference between the two may not even be apparent upon visual inspection without special markings on the card. The physical form-factor for an "eUICC supporting" UICC **166** could comprise a "micro-SIM" or a "nano-SIM" as defined in ETSI TS 102 221 V11.0.0, which is herein incorporated by reference. When the module **101** detects a "eUICC supporting" UICC **166**, the module **101** could send received eUICC profiles **311** to the "eUICC supporting" UICC **166**, and also select, deselect, activate, and deactivate the different received eUICC provides **311** recorded in the "eUICC supporting" UICC **166**. When a module **101** detects that a regular UICC (i.e. not an "eUICC supporting" UICC **166**) has been loaded into a slot for UICCs, the module **101** could access the UICC in a regular manner implemented by mobile phones and modules for connecting to existing wireless networks in 2013, such as LTE or 3G networks.

In addition to recording a received profile **311** and an activated profile **313**, an eUICC **163** can record an initial module private key **112***b* and a network public key **165***b*. An eUICC **163** can also record a plurality of received eUICC profiles **311**. As illustrated in FIG. **3***b* below, the network public key **165***b* could be recorded in the received eUICC profile **311**, where different profiles **311** and different network public keys **165***b* can be associated with different wireless networks **102**. The initial module private key **112***b* can be associated with an initial module public key **111***b*, as illustrated in FIG. **1***a* above. An eUICC subscription manager **164** could use the initial module public key **111***b* to encrypt the eUICC profile **311**, and a module **101** could use the initial module private key **112***b* to decrypt the eUICC profile received from the subscription manager **164**. The eUICC subscription manager **164**, assuming the eUICC subscription manager **164** is associated with MNO **108**, could sign the eUICC profile **311** using the network private key **165***a* (such as creating a server digital signature **506** as described in FIG. **5***a* below), and module **101** could verify the server digital signature **506** with the network public key **165***b*. The network public key **165***b* could be recorded in either (i) the eUICC **163** directly, and/or (ii) within the profile **311**. In either case, the initial module private key **112***b*, initial module public key **111***b*, an network PM keys **165***a* and **165***b* (as illustrated in FIG. **1***a*) can be useful for module **101** to authoritatively and securely receive eUICC profiles **311**.

Sensor **101***f* could be a device to collect environmental data or data regarding a monitored unit **119**. Sensor **101***f* could collect data such as, but not limited to, temperature, humidity, pressure, visible light levels, radiation, shock and/or vibration, voltage, current, weight, pH levels, orientation/motion, or the presence of specific chemicals. Sensor **101***f* could also be a microphone. Sensor **101***f* could be a magnetic strip reader for credit cards and similar cards, or an antenna for either near-field RF communications, such as, but not limited to, reading an RF identity tag. An antenna for a sensor **101***f* could also collect longer-range RF signals, such as, but not limited to, reading long-range radio frequency identity tags. Sensor **101***f* could also collect biometric data such as, but not limited to, heart rate, glucose levels, body temperature, or other health measurements and in this case monitored unit **119** could be a person. The sensor **101***f* can provide data to the CPU **101***b* in the form of analog or digital data, which can be communicated via a system bus **101***d* or physical interface **101***a* and other electrical interfaces are possible as well. A sensor measurement can comprise the analog or digital data collected by CPU **101***b* from sensor **101***f*. A sensor measurement can include processing of the analog or digital data input CPU **101***b* by sensor **101***f*, such as, but not limited to, averaging over time, using mathematic formulas to convert the raw data from sensor **101***f* into a usable form. Module **101** may also collect sensor data or sensor values using a sensor **101***f* and CPU **101***b*, where the data or values are derived from electrical signals output by a sensor **101***f*. A sensor measurement can comprise the sensor data or sensor values. If module **101** comprises a "point of presence" payment terminal, then a sensor measurement could comprise data read from a payment card.

As contemplated herein, the terms "sensor measurement" and "sensor data" can be used interchangeably, and can also be considered functionally equivalent. Although a single sensor **101***f* is shown in FIG. **1***c*, a module **101** could include multiple sensors. Each of the multiple sensors **101***f* could include a sensor identity **151**, which could comprise a number or string to identify the sensor **101***f*. A sensor **101***f* could be external to module **101**, and also a plurality of sensors **101***f* may be used and they also can connect to module **101** when module **101** uses radio **101***z* as a base station for a WiFi network. An exemplary embodiment where sensor **101***f* connects to module **101** using a radio **101***z* is also depicted and described in connection with FIG. **1***e* of U.S. patent application Ser. No. 14/055,606, filed Oct. 16, 2013 in the name of John Nix, which is hereby incorporated by reference in its entirety.

Actuator **101***y* could be a device to control a parameter or state for a monitored unit **119**, such as, but not limited to, changing a voltage or current, activating a switch or relay, turning on or off a microphone or speaker, activating or deactivating a light, and other examples are well known in the art. Actuator **101***y* could also be a speaker. Actuator **101***y* could be controlled by module **101** via a digital or analog output from CPU **101***b*, which could also be transmitted or sent via system bus **101***d* or a physical interface **101***a*. Although actuator **101***y* is illustrated as external to wireless module **101** in FIG. **1***c*, actuator **101***y* could also be internal to module **101**, and module **101** could include multiple actuators **101***y*. The use of multiple actuators **101***y* each with an actuator identity **152** is also depicted and described in connection with FIG. **1***e* of U.S. patent application Ser. No. 14/055,606, filed Oct. 16, 2013 in the name of John Nix, which is hereby incorporated by reference in its entirety. Sensors and actuators are well known to those of ordinary skill in the art, and thus are not described in additional detail herein.

Module **101** can include a Universal Serial Bus (USB) interface **101***v*. In accordance with an exemplary embodiment, module **101** can comprise a wireless module and include a radio **101***z*. Note that the use of a radio **101***z* is not required for module **101**, which could also obtain a connection to the IP Network **107** via a wired line such as Ethernet. Although not illustrated, radio **101***z* could include antennas for reception and transmission of RF signals, and even multiple antennas could be used. Although a single radio **101***z* is illustrated in module **101**, module **101** could also contain multiple radios **101***z*. Radio **101***z* can support wireless LAN standards such as, but not limited to, WiFi, Bluetooth, and Zigbee, or similar wireless LAN standards. Radio **101***z* illustrated in FIG. **1***c* can comprise a radio **101***z* depicted and described in connection with FIG. **1***d* of U.S.

patent application Ser. No. 14/039,401, filed Sep. 27, 2013 in the name of John Nix, the contents of which are herein incorporated in their entirety.

Note that module **101** may also operate as a base station in a wireless LAN, such as, but not limited to, an 802.11 base station. When module **101** operates a wireless LAN, radio **101***z* can function as either a client/node and/or a base station **103** to support communication from other wireless nodes in physical proximity, such as, but not limited to, other nodes within an exemplary 50 meters. The other wireless nodes could comprise a sensor **101***f* and/or actuator **101***y*, and in this case a sensor could be referred to as a "networked sensor" and an actuator could be referred to as a "networked actuator". Radio **101***z* functioning as a base station is depicted and described as a base station **103** is depicted and described in connection with FIG. **1***d* of U.S. patent application Ser. No. 14/039,401, filed Sep. 27, 2013 in the name of John Nix, the contents of which are herein incorporated in their entirety.

In accordance with exemplary embodiments, module **101** can store module private key **112**, server public key **114**, and module identity **110**, and a symmetric key **127** in memory/RAM **101***e* during operation, such as when CPU **101***b* is active and the module **101** is connected to a network such as a wireless network **102** during data transmissions. Module private key **112** preferably is recorded in nonvolatile memory such as, but not limited to, flash memory **101***w*, so that module **101** has access to its private key **112** after the private key has been derived or loaded, including times when a battery **101***k* has been fully drained or removed from module **101** (if module **101** does not utilize a persistent power source such as land-line power).

Symmetric key **127** can be a secure, shared private key for use with symmetric encryption or symmetric ciphering algorithms **141***b* (in FIG. **1***g* below). Symmetric key **127** can be derived by using module public key **111** and/or server public key **114**, possibly through the use of a key derivation function **141***f* (described in FIG. **1***d* below). Symmetric key **127** can be used for both encryption and decryption with symmetric cryptographic algorithms **141***b* described in FIG. **1***d* below, where a shared secret key can be used to encrypt/cipher and/or decrypt/decipher. Symmetric key **127** may also include an expiration time **133**, such that symmetric key **127** may only be used by module **101** and/or server **105** during a limited period of time, such symmetric key **127** remaining only valid for a day, or a week, or during a session (where the session comprises multiple messages and/or responses between a module **101** and a server **105**), etc. Module **101** can also derive symmetric key **127** according the Elliptic Curve Integrated Encryption Scheme (ECIES) and/or ECDH **159**, discussed in FIG. **1***d* below, using module public key **111**, server public key **114**, and a random number **128***a* from random number generator **128**. ECIES could be included in cryptographic algorithms **141**. A summary of ECIES shared key derivation is described the Wikipedia article "Integrated Encryption Scheme" from Sep. 18, 2013 (herein incorporated by reference). Other possibilities for shared key derivation function using public keys are possible as well, including a Diffie—Hellman key exchange. Using a derived symmetric key from the exemplary key derivation function ECIES, module **101** and/or server **105** could derive a second symmetric key **127** after the expiration time **133** of the first symmetric key **127** had transpired. As contemplated herein, a symmetric key **127** can also comprise a session key, or the use of a "session key" with a symmetric ciphering algorithm **141***b* can comprise a symmetric key **127**.

In an exemplary embodiment, a key derivation function **141***f* using public keys is not required to generate a shared symmetric key **127**, and alternatively a shared symmetric key **127** could be generated by any of module **101**, server **105**, module provider **109**, mobile network operator **108**, or wireless network **102**. If module **101** generates shared symmetric key **127** for symmetric ciphering **141***b* within a cryptographic algorithms **141**, then module **101** can send shared symmetric key **127** to server **105** using an asymmetric ciphering depicted and described in connection with FIG. **4** below. In accordance with a preferred exemplary embodiment, module **101** preferably uses a random number generator **128** to generate a random number **128***a* (illustrated in FIG. **1***d*) for input into cryptographic algorithms **141**, and the seed **128***b* in random number generator **128** could utilize data from a sensor **101***f* in order to generate a random number **128***a* with high entropy in the creation of symmetric key **127**. Random number generator **128** and random number **128***a* are also depicted and described in connection with FIG. **1***d* of U.S. patent application Ser. No. 14/039,401, filed Sep. 27, 2013 in the name of John Nix, the contents of which are herein incorporated in their entirety.

Module identity **110** is preferably a unique identifier of module **101**, and could comprise a number or string such as, but not limited to, a serial number, an international mobile subscriber identity number (IMSI), international mobile equipment identity (IMEI), or an Ethernet media access control (MAC) address. According to an exemplary embodiment, module identity **110** can also comprise a serial number or string that is written into hardware of module **101** upon manufacturing or distribution of module **101** (also depicted and described in connection with a step **511** in FIG. **5***b* below). In this case, module identity **110** could be recorded in a read only memory **101***c*, where read only memory **101***c* could not be easily erased or otherwise tampered with. Read only memory **101***c* could also comprise a protected memory and the address for accessing the module identity **101** within the ROM **101***c* could comprise a protected address. A protected address can comprise an address accessible to a CPU **101***b* and readable by CPU **101***b* where the data within the protected address is not modified, changed, or updated by a CPU **101***b* under normal operating conditions. Also note that the protected address can comprise one form of a nonvolatile memory, where a memory records data. Or, module **101** could read module identity **110**, which could be written into hardware by a manufacturer, distributor, or module provider **109**, by using a device driver **101***g* that reads a hardware address containing the module identity **110** using the system bus **101***d*. In this case, the hardware address can comprise a protected address, as contemplated herein. Module **101** can read the module identity **110** by accessing a read-only address using the bus **101***d*. In either case, in many embodiments module identity **110** may preferably be permanently or persistently associated with the physical hardware of module **101**, which can be helpful for the security procedures contemplated herein. Module identity **110** can function as a basic identifier for services from mobile network operator **108**, wireless network **102**, eUICC subscription manager **164**, and/or server **105** in order to properly identify module **101** among a plurality of modules. Module private key **112** and module public key **111** could be unique to module **101** and uniquely associated with module identity **110**, according to a preferred embodiment.

As contemplated herein, a module identity **110** can also have more than one use. A first module identity **110** could comprise a serial number for the physical hardware of module **101**, as described in the paragraph above. A second

module identity **110** could also comprise a session identifier, for data sessions between module **101** and server **105**, where the session identifier can be uniquely associated by a server **105** to module **101**. A third module identity **110** could comprise a network module identity **110***b* within a set of network access credential **314** described in FIG. **3***b* below. A fourth module identity **110** can be associated with the eUICC **163**. In embodiments where module identity **110** has more than one use, format, or representation, the module identity **110** associated with or written into hardware of module **101** (and potentially read from a read-only address in module **101**) may preferably comprise the module identity **110** used in a certificate **122**. Since a module **101** may utilize multiple module public keys **111** and module private keys **112** over its lifetime, a certificate **122** for module **101** can preferably include both (i) the module identity **110** (such as, but not limited to, a serial number for the physical hardware of module **101**) and (ii) a module public key identity **111***a* in order to specify the particular module public key **111** associated with certificate **122**. The use of a module public key identity **111***a* in a certificate **122** is also depicted and described in connection with FIG. **1***h* of U.S. patent application Ser. No. 14/055,606, filed Oct. 16, 2013 in the name of John Nix. Since a module **101** may also have multiple public keys **111** for different purposes (such as, but not limited to, one for creating digital signatures, another for asymmetric ciphering, another for use with a second wireless network **102**, etc.), then module **101** may also potentially have multiple valid certificates **122** concurrently each with different module public key identities **111***a*.

Further, as contemplated herein, a module identity **110** could also comprise more than one physical string or number, such as, but not limited to, a first string when module **101** connects with a first mobile network operator **108** or first wireless network **102**, and module identity **110** could comprise a second string when module **101** connects with a second mobile network operator **108** or second wireless network **102**. The first mobile network operator **108** or first wireless network **102** may have a first requirement or specification for the format, length, structure, etc. of module identity **110**, and the second mobile network operator **108** or second wireless network **102** may have a second requirement or specification for the format, length, structure, etc. of module identity **110**. In this manner, even though more than one string or number is used to identify a module **101**, the two different strings or numbers could comprise a module identity **110**.

Server public key **114** in module **101** could be obtained from downloading the key over the IP Network **107**, or optionally also written into nonvolatile memory of module **101** upon manufacture or distribution. Server public key **114** could be obtained using a domain name or Internet address that is recorded in nonvolatile memory upon the configuration of module **101**, such as, but not limited to, during installation or distribution, and module **101** could fetch the server public key **114** upon connecting to a wireless network **102** or other connection to the IP Network **107**. Additional elements besides those depicted in FIG. **1***c* could also be recorded in volatile memory **101***e*, which could comprise a RAM **101***e*. For example, cryptographic algorithms **141**, the shared secret keys **129**, and the pre-shared secret key code **134** could also be recorded in RAM **101***e* as well. Note that values and related data can also be recorded in both RAM **101***e* and nonvolatile memory **101***w* at the same time, such that data in nonvolatile memory **101***w* allows module **101** to access the data after a shutdown state, but moving the same data into RAM **101***e* during an active state allows module **101** to more quickly perform operations using a CPU **101***b*. Other possibilities exist as well for the storage location of various values and data elements illustrated in FIG. **1***e* without departing from the scope of the present invention.

Module **101** may also contain cryptographic algorithms **141**, which may comprise a suite of algorithms or subroutines that can be utilized for (i) deriving a pair of keys comprising a public key and a private key, (ii) encrypting data using public keys, (iii) decrypting data using private keys, (iv) processing secure hash signatures using private keys, and (v) verifying secure hash signatures using public keys, and related software, firmware, or subroutines for implementing a cryptographic system, including symmetric ciphering algorithms. Cryptographic algorithms **141** (also described below in FIG. **1***d*) could utilize publicly available software libraries within tools such as, but not limited to, OpenSSL maintained by The OpenSSL Project (http://www.openssl.org/), libgcrypt maintained by The Free Software Foundation (http://www.gnu.org/software/libgcrypt/), and similar libraries such as, but not limited to, libmcrypt and Crypto++. Note that cryptographic algorithms **141** could also use proprietary cryptographic libraries as well. In addition to implementing asymmetric encryption/ciphering, such as, but not limited to, used with RSA and

ECC cryptography, cryptographic algorithms **141** can provide symmetric ciphering where a shared private key is utilized to both encrypt and decrypt, such as, but not limited to, with the Advanced Encryption Standard (AES) cipher suite.

As illustrated in FIG. **1***c*, module **101** may also contain a random number generator **128**. Random number generator **128** may contain a seed **128***b*. The creation of random numbers with a high degree of entropy may be important the use of cryptographic algorithms **141**. A plurality of the data as a source for a random number seed **128***b* could be appended together into a "module random seed file" **139** (illustrated in FIG. **1***d*) with a combined series or list of states (i.e. a plurality of sensor **101***f* measurements, radio **101***z* measurements, clock **160** times or values, memory **101***e* or memory **101***w* states, operating system **101***h* states, actuator **101***y* states, and/or hardware **101***a* or **101***d* states). Note that values or data for each of the elements listed in the previous sentence could be utilized in a "module random seed file" **139** instead of or in addition to a state. The "module random seed file" is also depicted and described in connection with FIG. **1***e* of U.S. patent application Ser. No. 14/055,606, filed Oct. 16, 2013 in the name of John Nix, which is hereby incorporated by reference in its entirety

Note that the term "public key" as contemplated herein includes a key that may be shared with other elements, where the other elements may not be under the direct control of the same entity that holds the corresponding private key. However, the term "public key" as used herein does not require that the public key is made available to the general public or is publicly disclosed. An additional layer of security may be maintained in the present invention by preferably only sharing public keys on a confidential basis with other entities. For example, module public key **111** may be created by module **101** when generating module private key **112**, and module **101** may share module public key **111** with mobile network operator **108** in order to record module public key **111** in server **105**, but module **101** could choose to not (i) share module public key **111** with other entities, such as module provider **109** or (ii) provide a certificate **122** with module public key **111** publicly available on the IP

Network **107**. The benefits of confidentially sharing module public key **111** with server **105** are also further described below.

Although a single public key and private key for module **101** is illustrated in FIG. **1***c*, both module **101** and server **105** may each utilize several different pairs of public keys and private keys. As one example, module **101** may record a first private key **112** used for creating a digital signature and a second private key **112** for decryption using asymmetric ciphering algorithms **141***a*. In this example, a server **105** could utilize a first module public key **111** to verify the digital signature, and a second module public key **111** could be utilized to encrypt messages sent to module **101**. Similarly, either module **101** or server **105** may use private key **112** or **105***c*, respectively, to derive secondary shared keys such as, but not limited to, a derived shared key **129***b* below. Thus, one key pair could be used with digital signatures, a second key pair used for asymmetric ciphering, and a third key pair to derive shared secret keys. Each of the three illustrated pairs of keys could comprise a set of keys, and each of the illustrated pairs of keys could also use a different set of cryptographic parameters **126** (illustrated in FIG. **1***g* below), although the cryptographic parameters **126** for the various pairs of keys could also be the same.

In addition, module **101** could utilize a first set of keys to communicate with a first MNO **108** and a second set of keys to communicate with a second MNO **108**. The first set of keys could use or be associated with a first set of cryptographic parameters **126** and the second set of keys could use or be associated with a second set of cryptographic parameters **126**. According to exemplary embodiments, module **101** may also include a pre-shared secret key **129***a*. Pre-shared secret key **129***a* can comprise a secret key that is shared between module **101** and server **105** before module **101** begins (i) communicating with server **105** and/or a certificate authority **118**, (ii) or utilizing PM-based encryption and authentication to communicate with mobile network operator **108**. As illustrated in Figure if below, server **105** could also record the pre-shared secret key **129***a*, and a pre-shared secret key **129***a* can be associated with each module **101** using a module identity **110**. A pre-shared secret key **129***a* is also depicted and described in connection with U.S. patent application Ser. No. 14/055,606, filed Oct. 16, 2013 in the name of John Nix, which is hereby incorporated by reference in its entirety. In an exemplary embodiment, once the pre-shared secret key **129***a* has been utilized to authenticate or verify a module public key **111** with a server **105** (such as, but not limited to, using subsequent steps **517** in FIG. **5***b* below), then that particular pre-shared secret key **129***a* may be "discarded" and not used again for security purposes contemplated herein.

Note that the use of a pre-shared secret key **129***a* and pre-shared secret key code **134** is also optional, such that a module program **101***i* could cipher of obfuscate the initial submission of a derived module public key **111** and module identity to a server **105**, so that server **105** could be reasonably assured only a valid module **101** submitted the module public key **111**. According to a preferred exemplary embodiment, module **101** can derive its own module private key **112** and module public key **111**, and utilize pre-shared secret key **129***a* in order to securely and/or authoritatively communicate the derived module public key **111** with server **105** and/or a certificate authority **118**. The use of pre-shared secret key **129***a* can be particularly useful if module **101** has already been deployed with a monitored unit **119** and connects to server **105** though the IP Network **107** for the very first time. Server **105** could preferably utilize pre-shared secret key **129***a* in order to confirm that a received module public key **111** and module identity **110** from module **101** authoritatively belong to module **101**, as opposed to being an unauthorized or even fraudulent submission of module public key **111** and module identity **110**.

Server **105** could utilize a pre-shared secret key **129***a* and the steps depicted and described in connection with FIG. **4** below in order to securely receive module public key **111** and module identity **110** from module **101**, including the first time module **101** sends module public key **111** to server **105**. As one example, pre-shared secret key **129***a* could be utilized as a symmetric ciphering **141***b* key, described in FIG. **1***d* below. After the first submission of module public key **111** to server **105**, any subsequent submissions of new module public keys **111** derived by module **101** could either (i) continue to use the pre-shared secret key **129***a*, or (ii) use a symmetric key **127** derived after the first module public key **111** has been received. Securing the submission of module public key **111** with server **105**, including both the first submission and subsequent submissions, is also depicted and described in connection with FIG. **5***b* below.

FIG. **1***d*

FIG. **1***d* is a graphical illustration of components in a set of cryptographic algorithms, in accordance with exemplary embodiments. As contemplated herein, communications with module **101** can be secured by using cryptographic algorithms **141**. The cryptographic algorithms **141** used by module **101**, server **105**, or other servers can comprise a set of steps, procedures, or software routines for accomplishing steps to cipher, decipher, sign, and verify messages, including the generation of public keys, private keys, and derived shared keys, including symmetric keys. Cryptographic algorithms **141** can be implemented in software or firmware operating on (i) module **101** in the form of a module program **101***i* or an eUICC **163**, (ii) server **105** in the form of a module controller **105***x*, or (iii) wireless network **102** or MNO **108** in the form of a server **105**, where server **105** generates tokens for the authentication of a module **101** and mobile phones connecting with wireless network **102**. Example software for a cryptographic algorithms **141** includes the libraries within the openssl, libmcrypt, and/or and Crypto++ discussed in FIG. **1***c*. Other possibilities for the location of cryptographic algorithms **141** within a module **101**, server **105**, or wireless network **102** exist as well, including possibly module operating system **101***h* and a server operating system **105***h* (described in FIG. **1***k* below).

In addition, cryptographic algorithms **141** may be implemented in hardware or firmware on any of module **101**, server **105**, or MNO **108**. Note that module **101**, server **105** and MNO **108** could each utilize a different set of cryptographic algorithms **141**, although the sets of algorithms should preferably be fully interoperable (i.e. ciphering with a first symmetric ciphering algorithm **141***b* and a symmetric key **127** on module **101** could be deciphered by a second symmetric ciphering algorithm **141***b* on server **105** using the symmetric key **127**, etc.). As illustrated in FIG. **1***d*, cryptographic algorithms **141** may comprise an asymmetric ciphering algorithm **141***a*, a symmetric ciphering algorithm **141***b*, a secure hash algorithm **141***c*, a digital signature algorithm **141***d*, a key pair generation algorithm **141***e*, a key derivation function **141***f*, a random number generator **128**, and the other algorithms depicted in FIG. **1***d*.

Asymmetric ciphering algorithms **141***a* can comprise algorithms utilizing public key infrastructure (PM) techniques for both (i) encrypting with a public key and (ii) decrypting with a private key. Example algorithms within asymmetric algorithms **141***a* include the RSA algorithms

153 and the Elliptic Curve Cryptography (ECC) algorithms 154, and other asymmetric algorithms could be utilized as well. For example, either the ECC algorithms 154 or RSA algorithms 153 can be used for encryption and decryption, including (i) encryption step 402 discussed below in FIG. 4, as well as (ii) decryption step 514 discussed below in FIG. 5*a*. A set of cryptographic parameters 126 can include input into asymmetric ciphering algorithms 141*a*, such as, but not limited to, specifying key lengths, elliptic curves to utilize (if ECC), modulus (if RSA) or other parameters or settings required. As contemplated herein and described in additional detail below, the algorithms illustrated in FIG. 1*d* can perform both ciphering and deciphering, using the appropriate keys. Although RSA algorithms 153 and ECC algorithms 154 are illustrated within an asymmetric ciphering algorithm 141*a*, a RSA algorithm 153 and ECC algorithm 154 could also be associated with a key pair generation algorithm 141*e* and other elements within a set of cryptographic algorithms 141, and thus not exclusively used within a set of cryptographic algorithms 141 by an asymmetric ciphering algorithm 141*a*.

The use and application of RSA algorithms and cryptography are described within IETF RFC 3447 titled "Public-Key Cryptography Standards (PKCS) #1: RSA Cryptography Specifications Version 2.1", herein incorporated by reference, among other published standards for the use of RSA algorithms 153. The use of an RSA algorithm 153 for encryption and decryption, including with cryptographic algorithms 141 and other description of encryption or decryption algorithms, can also be processed according to the description of the RSA algorithm according to the Wikipedia entry for "RSA (algorithm)" as of Sep. 9, 2013, which is incorporated by reference herein.

The use and application of ECC algorithms 154 for asymmetric ciphering algorithms 141*a* within cryptographic algorithms 141 are described within IETF RFC 6090 titled "Fundamental Elliptic Curve Cryptography Algorithms" (herein incorporated by reference), among other published standards using ECC. ECC algorithms 154 can also utilize elliptic curve cryptography algorithms to the Wikipedia entry for "Elliptic curve cryptography" as of Sep. 9, 2013, which is incorporated by reference herein. ECC algorithms 154 may utilized according to exemplary preferred embodiments in order to maintain high security with smaller key lengths, compared to RSA, thereby helping to comparably reduce the message lengths, radio frequency spectrum utilization, and processing power required by module 101. Thus, the use of ECC algorithms 154 within various steps requiring ciphering or digital signatures may help conserve battery life of module 101 while maintaining the objective of securing system 100 and other systems illustrated herein. Note that as contemplated herein, other algorithms besides with ECC algorithms 154 and RSA algorithms 153 may be also be used in asymmetric algorithms 141*a* and also a key pair generation algorithm 141*e*.

Cryptographic algorithms 141 may also include a set of symmetric ciphering algorithms 141*b*. Symmetric ciphering algorithms 141*b* can utilize a symmetric key 127 by one node such as a module 101 to encrypt or cipher data, and the encrypted data can be decrypted or deciphered by server 105 also using the symmetric key 127. Examples of symmetric ciphers include Advanced Encryption Standard 155 (AES), as specified in Federal Information Processing Standards (FIPS) Publication 197, and Triple Data Encryption Standard (Triple DES), as described in MST Special Publication 800-67 Revision 1, "Recommendation for the Triple Data Encryption Algorithm (TDEA) Block Cipher (Revised January 2012)". Cryptographic parameters 126 input into symmetric ciphering algorithms 141*b* can include symmetric key 127 length, such as, but not limited to, the selection of 128, 192, or 256 bits with AES 155 symmetric ciphering, and cryptographic parameters 126 could also select a symmetric ciphering algorithm in a collection of symmetric ciphering algorithms 141*b*. Other examples of symmetric ciphering algorithms 141*b* may be utilized as well within cryptographic algorithms 141. Also note that as contemplated herein, the term "symmetric ciphering" contemplates the use of a symmetric key 127 in order to encrypt or cipher data with a symmetric ciphering algorithm 141*b*, and "asymmetric ciphering" contemplated the use of an asymmetric ciphering algorithm 141*a* to encrypt or cipher data with a public key, such as module public key 111 or server public key 114.

Cryptographic algorithms 141 may also include a set of secure hash algorithms 141*c* in order to compute and output a secure hash value or number based on a string or file input into the secure hash algorithms 141*c*. Example secure hash algorithms include SHA256 156 (also known as SHA-2) and SHA-3 157. SHA256 156 is specified in the National Institute of Standards and Technology (NIST) Federal Information Processing Standards Publication (FIPS PUB) 180-2 titled "Secure Hash Standard". SHA-3 157 is scheduled to be published in FIPS PUB 180-5. Cryptographic parameters 126 input into secure hash algorithms 141*c* can include the selection of the length of the secure hash, such as, but not limited to, using 224, 256, or 512 bits with either SHA-2 or SHA-3, and other possibilities exist as well.

Cryptographic algorithms 141 may also include a set of digital signature algorithms 141*d*, in order to sign and verify messages between (i) module 101 and server 105 or (ii) server 105 and wireless network 102. Digital signature algorithms 141*d* can also verify signatures such as, but not limited to, comparing that (i) a first secure hash value in the form of a digital signature in a certificate (not shown) using a certificate authority public key matches (ii) a second secure hash value in the certificate (not shown). Digital signature algorithms 141*d* can utilize algorithms in National Institute of Standards (MST) "FIPS 186-4: Digital Signature Standard", or IETF RFC 6979 titled "Deterministic Usage of the Digital Signature Algorithm (DSA) and Elliptic Curve Digital Signature Algorithm (ECDSA)". The use of ECDSA algorithm 158 within a set of digital signature algorithms 141*d* may be preferred if keys such as, but not limited to, module public key 111 and server public key 114 are based on elliptic curve cryptography. The use of the Digital Signature Standard can comprise a DSA algorithm 167. Other PM standards or proprietary techniques for securely verifying digital signatures may be utilized as well in digital signature algorithms 141*d*. Cryptographic parameters 126 input into digital signature algorithms 141*d* can include the selection of a secure hash algorithms 141*c* to utilize with digital signature algorithms 141*d*, or the algorithm to utilize, such as, but not limited to, ECDSA 158 shown or an RSA-based alternative for digital signatures is possible as well. Cryptographic parameters 126 input into digital signature algorithms 141*d* can also include a padding scheme for use with a digital signature algorithms 141*d*. Digital signature algorithms 141*d* could also include an RSA digital signature algorithm for use with RSA-based public and private keys.

Cryptographic algorithms 141 may also include key pair generation algorithms 141*e*, a key derivation function 141*f*, and a random number generator 128. Key pair generation algorithms 141*e* can be utilized by module 101, server 105,

or network **102** to securely generate private and public keys. The key pair generation algorithms **141***e* can also use input from a cryptographic parameters **126**, such as, but not limited to, the desired key lengths, or a value for an ECC curve if the public key will support ECC algorithms **154**. According to an exemplary preferred embodiment, module **101** can derive a pair of module public key **111** and module private key **112** using key pair generation algorithms **141***e*. Software tools such as, but not limited to, openssl and libcrypt include libraries for the generation key pairs, and these and similar libraries can be used in a key pair generation algorithm **141***e*.

Key derivation function **141***f* can be used by module **101**, server **105**, and/or wireless network **102** in order to determine a common derived shared secret key **129***b*, using at least two numbers as input. In exemplary embodiments, one of the two numbers as input can comprise one of (i) a private key, or (ii) a secret shared key **129**. The other of the two numbers input into a key derivation function **141***f* could comprise at least one number from (i) a set of cryptographic algorithms **126** or (ii) a random number **128** that is commonly shared between two nodes utilizing a key derivation function **141***f* in order to process or obtain the same derived shared secret key **129***b*. A key exchange to share a common symmetric key **127** can be performed using a key derivation function **141***f* and cryptographic parameters **126**, in addition to using public and/or private keys in some embodiments. In exemplary embodiments, three values comprising (i) a private key, (ii) a token such as a public key or a random number, and (iii) values from a set of cryptographic parameters **126** can be input into the key derivation function **141***f* in order to output a derived shared secret key **129***b*.

An exemplary algorithm within a key derivation function **141***f* can be the Diffie-Hellman key exchange, which is used by tools such as, but not limited to, secure socket layer (SSL) with RSA algorithms **153**. When using ECC algorithms **154**, module **101** and server **105** can utilize Elliptic Curve Diffie-Hellman (ECDH) algorithms **159**, and a summary of ECDH is included in the Wikipedia article titled "Elliptic Curve Diffie-Hellman" (http://en.wikipedia.org/wiki/Elliptic_curve_Diffie % E2%80%93Hellman from Sep. 24, 2013, which is herein incorporated by reference. Other algorithms to derive a shared secret key **129***b* using public keys, private keys, and tokens may also be utilized in a key derivation function **141***f*, such as, but not limited to, the American National Standards Institute (ANSI) standard X-9.63 160. Cryptographic parameters **126** used with key derivation function **141***f* with elliptic curve cryptography can include a common base point G for two nodes using the key derivation function **141***f* and public keys. The base point G in a cryptographic parameters **126** can be transmitted or sent from a module **101** to a server **105** in a message **208**, and the base point G can be sent from a server **105** to a module **101** in a response **209**, and other possibilities exist as well, including recording the base point G within a received eUICC profile **311**. Cryptographic parameters **126** can also include other or additional information for using a key derivation function **141***f* in order to derive either (i) a commonly shared symmetric key **127**, or (ii) a commonly shared secret key **129***b*. The use of a key derivation function **141***f* with a Diffie Helmman key exchange is also depicted and described in connection with FIG. **11** below. Other possibilities for a key derivation function **141***f* exist as well without departing from the scope of the present invention.

Cryptographic parameters **126** input into key pair generation algorithms **141***e* can include the type of asymmetric ciphering algorithms **141***a* used with the keys, the key length in bits, an elliptic curve utilized for ECC, a time-to-live for a public key that is derived, and similar settings. Additional cryptographic parameters **126** for a public key can include a supported point formats extension, where the supported point formats extension could comprise uncompressed, compressed prime, or "compressed char2" formats, as specified in ANSI X-9.62. In other words, an ECC public key can have several formats and a set of cryptographic parameters **126** can be useful to specify the format. Although a set of cryptographic parameters **126** is illustrated in FIG. **1***d* as internal to cryptographic algorithms **141**, parameters **126** could be recorded in other locations in a module **101** or a system **100**. As one example, a set of cryptographic parameters **126** could be recorded in a server **105** and downloaded by module **101** using the IP Network **107**. The various algorithms within cryptographic algorithms **141** may utilize a random number generator **128**, which is also depicted and described in connection with FIG. **1***c* above. As contemplated herein, the term "cryptographic parameters" **126** may be considered equivalent to a "set of cryptographic parameters" **126**, and also use of the terms "parameters" **126** and "set of parameters" **126** can both refer to the cryptographic parameters **126** illustrated in FIG. **1***d* and FIG. **1***i*. Cryptographic parameters **126** are also further depicted and described in connection with FIG. **1***i* below.

According to a preferred exemplary embodiment, cryptographic parameters **126** can include values to define an elliptic curve and/or use ECC algorithms **154**. A set of ECC parameters **137** could comprise values or numbers for an elliptic curve defining equation. ECC parameters **137** are also depicted and described in FIG. **1***g* of U.S. patent application Ser. No. 14/055,606, filed Oct. 16, 2013 in the name of John Nix, which is hereby incorporated by reference in its entirety. Cryptographic parameters **126** could also include an ECC standard curve **138**, which could comprise a name and/or values for a standardized curve, such as, but not limited to, the list of named curves included in section 5.1.1 of IETF RFC 4492 titled "Elliptic Curve Cryptography (ECC) Cipher Suites for Transport Layer Security (TLS)."

As contemplated herein, a set of cryptographic algorithms **141** may operate using either strings or numbers, and cryptographic parameters **126** could include either strings or numbers as well. As contemplated herein (i) a collection, sequence, and/or series of numbers could comprise a string, (ii) a string can include a mixture of numbers and characters, or (iii) a string can comprise a collection, sequence, and/or series of characters or bits. The processing of cryptographic algorithms **141** within a module **101** can take place within a CPU **101***b*, or module **101** could also process cryptographic algorithms in a cryptographic processing unit (not shown) connected to the system bus **101***d*. An eUICC **163** could also include a set of cryptographic algorithms **141**, in addition to a separate set of cryptographic algorithms **141** being recorded in a flash memory **101***w* for module **101**. According to an exemplary embodiment, a module **101** or a server **105** could include a cryptographic processing unit (not shown) separate from the CPU **101***b* or CPU **105***b* in order to increase efficiency or security for supporting the use of cryptography through a system **100**. An eUICC **163** could comprise the separate cryptographic processing unit. Alternatively, in exemplary embodiments cryptographic algorithms **141** can be implemented entirely in software within a module **101** and/or server **105**, and also utilized by a module controller **105***x* and network controller **101***i*. A shared secret algorithm **141***g* is depicted and described in connection with Figure if below. In an exemplary embodiment, a shared secret algorithm **141***g* can comprise an

algorithm to accept input from (i) a set of component parameters **101***t* and (ii) an algorithm token **190**, which are both depicted and described in connection with FIG. **1***e* and FIG. **1***f*, and the shared secret algorithm **141***g* can output a shared secret key **129***c*. A secret ciphering algorithm **141***h* is depicted and described in connection with FIG. **1***g* below. In an exemplary embodiment, a secret ciphering algorithm **141***h* can comprise an algorithm to accept input from (i) a module identity **110** and (ii) an algorithm token **190** as a key, which are both depicted and described in connection with FIG. **1***f*, and the secret ciphering algorithm **141***h* can output an encrypted module identity **110***a*. A secret ciphering algorithm **141***h* can also be used as a symmetric ciphering algorithm **141***b*, where the logic and/or steps for using a key such as, but not limited to an algorithm token **190**, remain secret and/or are not publicly shared. In an exemplary embodiment, a secret ciphering algorithm **141***h* can be similar to AES **155**, but with a different and confidential series of steps for mixing and substituting data input in order to output encrypted data. A server **105** or other servers can use a secret ciphering algorithm **141***h* and input of a ciphertext and a key to derive or process plaintext. In an exemplary embodiment, a server **105** or other servers can use a secret ciphering algorithm **141***h* and input of (i) ciphertext of an encrypted module identity **110***a* and (ii) an algorithm token **190** in order to output a module identity **110**.

FIG. **1***e* FIG. **1***e* is a graphical illustration of a set of components for a module and a set of component parameters, in accordance with exemplary embodiments. A module **101** can comprise a plurality of hardware and software components for operating in a system **100** and other exemplary systems illustrated herein. The hardware components can be manufactured and assembled into a housing or enclosure for distribution to module providers **109** and/or distributors or end users of a module **101**. Hardware components illustrated in FIG. **1***e* can include a RAM **101***e*, a flash memory **101***w*, a CPU **101***b*, a radio **101***z*, an eUICC **163**, a sensor **101***f*, and an actuator **101***y*. Software and/or firmware components can include operating system **101***h* and also a module program **101***i* (not shown). Module **101** can also include a plurality of any of these components. Any of the components can include a set of component parameters **101***t*, including a model number, size or capacity, a serial number, a manufacturing date (or release date), a system bus **101***d* address, a speed or capacity, an operating frequency, a software or firmware version for the component, a file size, an associated battery size **101***k*, and/or a list of values, etc. The overall assembled and/or manufactured module **101** can include component parameters **101***t* as well, including a serial number, version number, list of supported sensors and/or actuators, etc. Component parameters **101***t* are depicted in FIG. **1***e* as illustrative as opposed to being limiting, and other component parameters can be utilized as well for a set of component parameters **101***t*, in addition to the use of different components than those illustrated in FIG. **1***e*.

In exemplary embodiments, component parameters **101***t* can include many values that remain persistent over the lifetime of a module **101**, although in some embodiments a component for a module **101** could be changed after manufacturing. As one example, a technician could change a memory unit such as a RAM **101***e* for upgrade or other purposes, and the new RAM **101***e* could subsequently utilize different component parameters **101***t*. In exemplary embodiments other entities besides the module **101** could record or store a set of component parameters **101***t* for a module **101**, including module provider **109**, mobile network operator **108**, and/or a server **105**. A server **105** or the other entities could record a set of component parameters **101***t* in a database with a module identity **110**, and the database that includes component parameters **101***t* for the module **101** could be updated if the component parameters **101***t* change after manufacturing. As contemplated herein, a set of component parameters **101***t* can comprise any of the component parameters **101***t* for each of the hardware and/or software elements within a module **101**, including component parameters **101***t* for the overall module **101**. A set of component parameters can comprise either numbers or strings, including a mix of numbers and strings. As contemplated herein, the term "set of component parameters" **101***t* can also refer to component parameters **101***t*. Since each module **101** in a plurality of modules **101** can be different, such as using different serial numbers for individual components, a set of component parameters **101***t* for a module **101** can be unique in exemplary embodiments. Other possibilities exist as well for a set of component parameters **101***t* to be unique for a module **101** without departing from the scope of the present invention.

FIG. **1***f*

Figure if is a graphical illustration for deriving a shared secret key using a shared secret algorithm, an algorithm token, and component parameters, in accordance with exemplary embodiments. A module **101** and/or server **105** can use a shared secret algorithm **141***g* to process or derive a shared secret key **129***c* using as input (i) a set of component parameters **101***t* and an algorithm token **190**. A set of component parameters **101***t* for a module **101** are depicted and described in connection with FIG. **1***e* above. The component parameters **101***t* for a module **101** can include a list of values input into the shared secret algorithm **141***g* such as one or more component or system serial numbers, system bus **101***d* addresses, component model numbers, component sizes, date or time values for component manufacturing or release dates, and/or other similar data. In an exemplary embodiment, the set of parameters **101***t* input into a shared secret algorithm **141***g* can be persistent or relatively long-lived, such that the list of values from a set of component parameters **101***t* do not frequently change. In another embodiment, the list or values for a module **101** comprising a set of component parameters **101***t* can change over time, and in this case, both module **101** and a server **105** (or other servers using the shared secret algorithm **141***g*) would also record any updated or changed values for a set of component parameters **101***t* in order to utilize the same input. In other words, a set of component parameters **101***t* used by a module **101** and a server **105** (or other servers associated with server **105**) can keep the set of component parameters **101***t* for a module **101** synchronized.

An algorithm token **190** input into a shared secret algorithm **141***g* can comprise a temporary value or a number or a string that may preferably only be used once in exemplary embodiments. As illustrated in FIG. **1***f*, an algorithm token **190** can comprise a timestamp and/or a random number **128***a*. The timestamp can be calculated using a clock **160** and the random number **128***a* may comprise a random number **128***a* processed with a random number generator **128**. The random number generator **128** could use a "module random seed file" **139** in order to populate a seed **128***b* with a number or value that comprises a high level of "noise" or information entropy. As contemplated herein, a random number **128***a* can comprise a pseudo-random number such that the number output by a random number generator **128** may not completely mathematically random, but for the purposes contemplated herein a pseudo-random number can

comprise a random number **128***a*. In an exemplary embodiment, an algorithm token **190** can comprise a time value, a random number **128***a* alone, or a combination of a time value and a random number **128***a*. In an exemplary embodiment, the time value and/or random number **128** may preferably have a sufficient number of digits or resolution such that the probability of using the same random number **128***a* and/or time value as an algorithm token **190** input into a shared secret algorithm **141***g* would be sufficiently small or negligible. Note that other values besides a time value or a random number **128***a* could be used in an algorithm token **190**, where the other values also have a low probability of being reused and/or also contain a high level of information entropy. As contemplated herein, an algorithm token **190** can also be used with other algorithms in a set of cryptographic algorithms **141** in addition to a shared secret algorithm **141***g*, including a secret ciphering algorithm **141***h* depicted and described in connection with FIG. **1***g* below.

Shared secret algorithm **141***g* can use the algorithm token **190** and set of component parameters **101***t* as input and output a shared secret key **129***c*. Another element in a system **100** besides a module **101** can obtain or process the same shared secret key **129***c* using an equivalent value for an algorithm token **190** and set of component parameters **101***t*. Consequently in preferred embodiments module **101** and the other element such as, but not limited to server **105**, could determine the same or equivalent value for an output shared secret key **129***c* without having to send or receive the shared secret key **129***c* output from the shared secret algorithm **141***g*. Shared secret algorithm **141***g* could use logic or a set of programmatic steps for taking the values input and generating the output of a shared secret key **129***c*. In an exemplary embodiment, shared secret algorithm **141***g* could select, mix, and append values from the series of component parameters **101***t* and the time value and/or random number **128***a* into a string or number. A shared secret algorithm **141***g* could also use data from the algorithm token **190** to determine or process data from the set of component parameters **101***t* in order to output at least one shared secret key **129***c*.

In an exemplary embodiment, a string or number resulting from processing the set of component parameters **101***t* and algorithm token **190** could be input into a secure hash algorithm **141***c* with a shared secret algorithm **141***g*, and the output of the secure hash algorithm **141***c* could be used for a shared secret key **129***c*. Other possibilities for the logic of a shared secret algorithm **141***g*, including using a set of component parameters **101***t* and an algorithm token **190** to create a shared secret key **129***c*, are possible as well without departing from the scope of the present invention. Although a single algorithm token **190** and single shared secret key **129***c* are illustrated in FIG. **1***f*, a module **101** and server **105** could use a plurality of single algorithm tokens **190** with a shared secret algorithm **141***g*. In an exemplary embodiment, shared secret algorithm **141***g* could also output a plurality of shared secret keys **129***c*, and other logic could specify the use of one or several of the plurality of shared secret keys **129***c* output by a shared secret algorithm **141***g*.

In an exemplary embodiment, the values from the series of component parameters **101***t* and the algorithm token **190**, such as, but not limited to a time value and/or random number **128***a*, both (i) input into a shared secret algorithm **141***g* and (ii) including possibility using a secure hash algorithm **141***c* with a shared secret algorithm **141***g*, can be longer (or comprise more bits) than the output of a shared secret algorithm **141***g*. The logic for processing the set of component parameters **101***t* and algorithm token **190** as input into the shared secret algorithm **141***g* can include rules, steps, and/or logic for selecting subsets of the input data, mixing the input data, and ordering the input data. In an exemplary embodiment, the rules, steps, and/or logic for processing the input data in a shared secret algorithm **141***g* may preferably remain confidential or not publicly shared, in order for the output of shared secret key **129***c* to reasonably remain "secret" and not reasonably obtainable by third parties who might also have the set of component parameters **101***t* and the algorithm token **190**.

In exemplary embodiments where a secure hash algorithm **141***c* is used in or with a shared secret algorithm **141***g*, a processed subset of the output from the secure hash algorithm **141***c* could be used for the shared secret key **129***c*. For example, if (A) the secure hash algorithm **141***c* outputs 256 bits, but a smaller key is needed such as an exemplary 128 bits for a shared secret key **129***c* that comprises a symmetric key **127** for use with AES ciphering **155**, then (B) shared secret algorithm **141***g* could also contain logic to select or derive the shared secret key **129***c* of the appropriate length from the output of a secure hash algorithm **141***c*, including truncating, parsing, or selecting a subset the output from a secure hash algorithm **141***c*. Multiple instances or rounds of one or many of a secure hash algorithm **141***c* could also be used with a shared secret algorithm **141***g* such that data input is processed in a shared secret algorithm **141***g* using a secure hash algorithm **141***c* more than once. In exemplary embodiments, as described below in FIG. **1***g*, the algorithm token **190** for a shared secret algorithm **141***g* can be shared by module **101** with other parties or nodes, including a server **105**, in order for the server **105** to calculate the same shared secret key **129***c* using the shared secret algorithm **141***g* and the same set of recorded component parameters **101***t*. In these embodiments mentioned in the previous sentence, the module **101** could send the algorithm token to a server **105** in a message **208**, as illustrated in FIG. **6** below.

As contemplated herein, a shared secret key **129***c* output from a shared secret algorithm **141***g* may have multiple different uses, where a first shared secret key **129***c* can be used in a module identity string ciphering algorithm **161** (FIG. **1***g* below) and a second shared secret key **129***c* could be used as a symmetric key **127**. Also, a shared secret algorithm **141***g* can comprise one embodiment of a key derivation function **141***f*, where the shared secret key **129***c* can also comprise a derived shared secret key **129***b*. Other possibilities exist as well without departing from the scope of the present invention.

FIG. **1***g*

FIG. **1***g* is a graphical illustration for ciphering and deciphering plaintext using a secret ciphering algorithm with input of ciphertext and a key, in accordance with exemplary embodiments. FIG. **1***g* illustrates an exemplary secret ciphering algorithm ciphering **161** and an exemplary secret ciphering algorithm deciphering **162**. In the exemplary secret ciphering algorithm ciphering **161**, a secret ciphering algorithm **141***h* can process or derive output of ciphertext as encrypted module identity **110***a* using input of (i) an algorithm token **190** as a cipher key and (ii) plaintext in the form of a module identity **110**. In the exemplary secret ciphering algorithm deciphering **162**, a secret ciphering algorithm **141***h* can process or derive plaintext output of a module identity **110** using input of (i) an algorithm token **190** as a cipher key and (ii) ciphertext in the form of an encrypted module identity **110***a*. As contemplated herein, a secret ciphering algorithm **141***h* as one form of a symmetric ciphering algorithm **141***b* can also process other ciphertext and plaintext besides an encrypted module identity **110***a* and a module identity **110**, respectively. In addition, a secret

ciphering algorithm **141***h* can use a different key besides an algorithm token **190** as a cipher key, such as, but not limited to, a random number **128***a* as a cipher key.

The communication of a module identity **110** in a system **100** and other systems illustrated herein can include the transmission of an encrypted module identity **110***a* with the cipher key in the form of an algorithm token **190**. The transmission of an encrypted module identity **110***a* with the cipher key in the form of an algorithm token **190** can remain reasonably secure, since the symmetric ciphering algorithm **141***b* used in a secret ciphering algorithm **141***h* to process ciphertext transmitted can remain secret or confidential. The secret symmetric ciphering algorithm **141***b* can comprise a secret ciphering algorithm **141***h*. A secret ciphering algorithm **141***h* is also depicted and described in connection with FIG. **1***d*. In an exemplary embodiment, secret ciphering algorithm **141***h*, and other cryptographic algorithms **141**, can be included in a module program **101***i* and a program, library, or subroutine in a server **105**.

In an exemplary embodiment, in order for the secret ciphering algorithm **141***h* to remain reasonably secure and/or confidential, the secret ciphering algorithm **141***h* can either (i) not be transmitted across a network such as, but not limited to, the IP Network **107** and recorded in module **101** upon manufacturing and/or distribution, or (ii) transmitted across a network such as, but not limited to, the IP Network **107** in an encrypted or ciphered format. In exemplary embodiments, a cipher key used in a secret ciphering algorithm ciphering **161** and a secret ciphering algorithm deciphering **162** can also comprise any of a shared secret key **129***c*, a symmetric key **127**, a derived shared key **129***b*, or a pre-shared secret key **129***a*. With the use of a cipher key such as a shared secret key **129***c*, a symmetric key **127**, a derived shared key **129***b*, or a pre-shared secret key **129***a*, these keys may optionally not be transmitted with the ciphertext output of secret ciphering algorithm **141***h*, when the other node also can derive or obtain the cipher key through secure means. Other possibilities exist as well, in order for a module **101** and a server **105** to use the same cipher key with a secret ciphering algorithm **141***h* to decrypt or resolve the ciphertext possibly in the form of an encrypted module identity **110***a* into plaintext possibly in the form of a module identity **110**. A secret ciphering algorithm **141***h* could select, mix, and append values from the cipher key and the plaintext in a secret or confidential manner in a plurality of rounds, such that an observer with the cipher key and the ciphertext would not reasonably be able to read or determine the plaintext.

In exemplary embodiments, a module identity **110** can be sent or transmitted in the form of an encrypted module identity **110***a* in order to protect the identity of module **101** from third parties along the path of communications between a module **101** and a server **105**. The algorithm token **190** sent with the encrypted module identity **110***a* can be a cipher key used by a secret ciphering algorithm **141***h* to decipher the encrypted module identity **110***a* into a module identity **110**. A module **101** can use a secret ciphering algorithm ciphering **161** to convert a module identity **110** into an encrypted module identity string **110***a* with an algorithm token **190** as a cipher key. In a secret ciphering algorithm ciphering **161**, the module identity **110** and the algorithm token **190** as a cipher key can be input in to a secret ciphering algorithm **141***g* in order to output a encrypted module identity **110***a* string or number. The algorithm token **190** can comprise or use a random number **128***a*. A module **101** sending a message with an encrypted module identity **110***a* and an algorithm token **190** is depicted and described in connection with FIG. **6** below. In an exemplary embodiment, the plaintext can include a security token **401** in order to prevent replay or reuse of the encrypted module identity **110***a*, where a security token **401** is depicted and described in connection with FIG. **4** below. Note that the use of a security token **401** is optional and may be omitted, and replay or reuse of an encrypted module identity **110***a* can also be implemented by changing the algorithm token **190** used as a cipher key.

A node such as a server **105** could use a secret ciphering algorithm deciphering **162** in order to read plaintext from a received ciphertext and also a received algorithm token **190**. When used with an encrypted module identity **110***a*, a server **105** could process or input the encrypted module identity **110***a* into a secret ciphering algorithm **141***h*, along with inputting the algorithm token **190**, in order to extract the plaintext. A secret ciphering algorithm deciphering **162** can comprise the reverse or inverse operation of secret ciphering algorithm ciphering **161**. Note that the plaintext could include a security token **401** in order to prevent replay or reuse of the ciphertext, and a security token **401** is depicted and described in connection with FIG. **4** below and could comprise a random number or string. In order to decrypt an encrypted module identity **110***a*, a server **105** would preferably use the same secret ciphering algorithm **141***h* implemented by the module **101** sending the encrypted module identity **110***a*. The module **101** can use a secret ciphering algorithm ciphering **161** to cipher or encrypt the module identity **110** as the encrypted module identity **110***a*. The server **105** can also receive the algorithm token **190** along with a message that contains the encrypted module identity **110***a*. Although illustrated in FIG. **6** below as both encrypted module identity **110***a* and algorithm token **190** being received by a server **105** in the same message, the two values could be sent in separate messages.

An algorithm token **190** as a cipher key input into a secret ciphering algorithm **141***h* can comprise a temporary value or a number or a string that may preferably only be used once in exemplary embodiments, and can include a random number **128***a*. As illustrated in FIG. **1***h*, an algorithm token **190** for a secret ciphering algorithm **141***h* can comprise a timestamp and/or a random number **128***a*. The timestamp can be calculated using a clock **160** and the random number **128***a* may comprise a random number **128***a* processed with a random number generator **128**. The random number generator **128** could use a "module random seed file" **139** in order to populate a seed **128***b* with a number or value that comprises a high level of "noise" or information entropy. In an exemplary embodiment, an algorithm token **190** can comprise a time value alone, a random number **128***a* alone, or a combination of a time value and a random number **128***a*. In an exemplary embodiment, the time value and/or random number **128** may preferably have a sufficient number of digits or resolution such that the probability of using the same random number **128***a* and/or time value as an algorithm token **190** input into a secret ciphering algorithm **141***h* would be sufficiently small or negligible. Note that other values besides a time value or a random number **128***a* could be used in an algorithm token **190**, where the other values also have a low probability of being reused and also contain a high level of information entropy.

In an exemplary embodiment, for a system **100** with a plurality of modules **101**, different modules **101** could utilize different secret ciphering algorithms **141***h*. Other identifying information besides a module identity **110** within a module encrypted data **110***a* could be used by a set of servers **105** in order to determine which secret ciphering algorithm **141***h* is used for any given module **101**. A first set of modules **101**

using a first secret ciphering algorithm **141***h*, possibly to encrypt a module identity **110**, could send data to a first IP address or port number. The receipt of data at the port number or address by the server could signal or determine for the server **105** which secret ciphering algorithm **141***h* was used to encrypt the plaintext, thereby allowing the server **105** to select the appropriate secret ciphering algorithm **141***h* in order to decrypt the received ciphertext. Or, module **101** could send a value in a message that would specify which secret ciphering algorithm **141***h* is used with ciphertext sent by module **101**, such as an encrypted module identity **110***a*. Other possibilities exist as well for the use of a plurality of secret ciphering algorithms **141***h* as well, without departing from the scope of the present invention.

In exemplary embodiments, where a module identity **110** may be obfuscated or encrypted in an encrypted module identity **110***a* sent to a server **105** in a message, the packet may also contain other encrypted data such as a module encrypted data **403** depicted and described below in FIG. **4**. The packet can also include the algorithm token **190**. A module encrypted data **403** can be ciphered with a symmetric key **127** and a different symmetric ciphering algorithm **141***b* than secret ciphering algorithm **141***h*. A server **105** receiving a packet containing a module encrypted data **403** should preferably be able to select a symmetric key **127** using a module identity **110** in order to decrypt the module encrypted data **403**. Since the module identity **110** may be transmitted as an encrypted module identity **110***a*, the server **105** can use the algorithm token **190** and a secret ciphering algorithm deciphering **162** in order to read the plaintext module identity **110**. Upon reading the plaintext module identity **110**, the server can select the symmetric key **127** from a module database **105***k* in order to decrypt the module encrypted data **403** into plaintext.

FIG. **111**

FIG. **1***h* is a graphical illustration for deriving a shared secret key and an encrypted module identity, in accordance with exemplary embodiments. As depicted and described in connection with FIG. **1***f*, a shared secret key **129***c* can be calculated or derived by a shared secret algorithm **141***g*, where the shared secret algorithm **141***g* can use input from a set of component parameters **101***t* and an algorithm token **190**. The set component parameters **101***t* depicted in FIG. **1***h* are shown as illustrative as opposed to limiting, and other component parameters **101***t* could be utilized as well by a shared secret algorithm **141***g*. The values for a set of component parameters **101***t* could be encoded in different formats than plaintext as well. The algorithm token **190** can also comprise different data, such as a random number **128***a* in the form of binary or hexadecimal data and also with a longer set of digits than those shown in FIG. **1***h*. A timestamp can be in other formats, such as, but not limited to, a number corresponding to unix epoch time. A module **101** and a server **105** could calculate the same or equivalent shared secret key **129***c* using the same or equivalent input from the algorithm token **190** and the set of component parameters **101***t*. The module **101** and server **105** could use the same share secret algorithm **141***g* to determine the same shared secret key **129***c*. The server **105** could record the set of component parameters **101***t* in a module database **105***k*, and the server **105** could select the set of component parameters **101***t* using a module identity **110** received in a message. A shared secret key **129***c* could also comprise a number longer than the number illustrated in FIG. **1***h*, such as an exemplary 128 bits for use as a symmetric key **127** with a symmetric ciphering algorithm **141***b* that requires a key of 128 bits, and other possibilities exist as well.

In order to output shared secret key **129***c*, shared secret algorithm **141***g* can use the logic and/or steps for a shared secret algorithm **141***g* depicted and described in connection with Figure if to process the input data from the set of component parameters **101***t* and the algorithm token **190** in order to calculate the shared secret key **129***c*. Different values for a shared secret key **129***c* could be calculated using different values for the set of component parameters **101***t* and the algorithm token **190**. As illustrated in FIG. **1***h*, a first module **101** associated with a first module identity **110** could use a first set of component parameters **101***t* and different values for an algorithm token **190** in order to obtain different shared secret keys **129***c* over time, and a server **105** could calculate the same shared secret keys **129***c* by receiving the algorithm token **190** in a message. As illustrated in FIG. **1***h*, a second module **101** associated with a second module identity **110** could use a second set of component parameters **101***t* and different values for an algorithm token **190** in order to obtain different shared secret keys **129***c* associated with the second module **101** over time. A server **105** could calculate the corresponding shared secret keys **129***c* for the second module **101** by receiving the algorithm token **190** in a message, and use the second set of component parameters **101***t*.

Encrypted module identity **110***a* can be calculated by a module **101** using a secret ciphering algorithm ciphering **161** and a key in the form of an algorithm token **190**. The algorithm token **190** can preferably include a random number **128***a* in an exemplary embodiment. As illustrated in FIG. **1***h*, a set of component parameters **101***t* can also be used in a ciphering key in a secret ciphering algorithm ciphering **161**, but the use of component parameters **101***t* with a secret ciphering algorithm ciphering **161** can optionally be omitted, and in this case the ciphering key for a secret ciphering algorithm ciphering **161** can comprise an algorithm token **190**. The encrypted module identity **110***a* and algorithm token **190** could be sent to a server **105** in an exemplary message illustrated in FIG. **6** below. A server **105** or set of servers **1010** (illustrated in FIG. **10**) could receive the encrypted module identity **110***a* and algorithm token **190**, and the server **105** could use a secret ciphering algorithm deciphering **162** and the algorithm token **190** to decrypt the encrypted module identity **110***a* in order to read the plaintext module identity **110**. By using different values for the algorithm token **190** with a secret ciphering algorithm ciphering **161**, a module **101** can calculate different values for encrypted module identity **110***a* over time.

FIG. **1***i*

FIG. **1***i* is a graphical illustration of an exemplary system, where a module and a server exchange a set of cryptographic parameters and a subset of the set of cryptographic parameters, in accordance with exemplary embodiments. In exemplary embodiments, a first node can send a set of cryptographic parameters **126** to a second node, and the second node can send a subset of cryptographic parameters **126***a* to the first node. In an exemplary embodiment, a server **105** can send the set of cryptographic parameters **126** to a module **101**, and the module **101** can send the subset of the cryptographic parameters **126***a* to the server **105**. The module can select the subset of cryptographic parameters **126***a* according to the capabilities of a module program **101***i* and/or a set of cryptographic parameters **141** recorded in the module **101**. In another exemplary embodiment, a module **101** can send the set of cryptographic parameters **126** to a server **105** (or a set of servers **1010** illustrated in FIG. **10**), and the server **105** can send the subset of the cryptographic parameters **126***a* to the module **101**.

In this manner, using the steps illustrated in FIG. **1***i*, the two nodes can select and agree on a subset of cryptographic parameters **126***a* for use with a set of cryptographic algorithms **141**. The exemplary values for a set of cryptographic parameters **126** are shown in FIG. **1***i* to be illustrative as opposed to limiting, and other values or fields for a set of cryptographic parameters **126** are possible as well without departing from the scope of the present invention. As contemplated herein, a subset of cryptographic parameters **126***a* can also comprise a set of cryptographic parameters **126**. Although not illustrated in FIG. **1***i*, a node receiving a subset of cryptographic parameters **126***a* could send an acknowledgement upon receipt to signal the subset of cryptographic parameters **126***a* had been properly received in a valid or acceptable format and also implemented in communication with the other node.

In addition, both the set of cryptographic parameters **126** and the subset of cryptographic parameters **126***a* can be transmitted in a ciphertext form in order to increase security. In an exemplary embodiment, server **105** can send the set of cryptographic parameters **126** in a server encrypted data **504** (depicted and described in connection with FIG. **5***a* below), and the module **101** can respond with a subset of cryptographic parameters **126***a* in a module encrypted data **403** (depicted and described in connection with FIG. **4** below). The set of cryptographic parameters **126** or **126***a* could be encrypted with a symmetric key **127**, where in an exemplary embodiment the symmetric key **127** could comprise a pre-shared secret key **129***a* depicted and described in connection with FIG. **1***d* of U.S. patent application Ser. No. 14/039,401, filed Sep. 27, 2013 in the name of John Nix, which is incorporated by reference in its entirety. Or, the symmetric key **127** for encrypting a set of cryptographic parameters **126** or **126***a* could comprise a shared secret key **129***c* as described in Figure if and FIG. **1***h* herein.

In exemplary embodiments, module **101** and server **105** could pre-agree to a base set of cryptographic parameters **126** different than the set of cryptographic parameters **126** illustrated in FIG. **1***i*, and the pre-agreed base set of cryptographic parameters **126** could be used with a set of cryptographic algorithms **141** to establish a symmetric key **127** in order to encrypt the set of cryptographic parameters **126** or **126***a*. In addition, the set of cryptographic parameters **126** or **126***a* could be ciphered using an asymmetric ciphering algorithm **141***a* and a public key of the other node, and sent to the receiving node to decrypt using the private key of the receiving node. The algorithms used to cipher a set of cryptographic parameters **126** in an asymmetric ciphering algorithm **141***a* could be pre-agreed, and a different set of asymmetric ciphering algorithms **141***a* could be selected after processing the received set of cryptographic parameters **126**. Other possibilities for encrypting a set of cryptographic parameters **126** or **126***a* exist as well without departing from the scope of the present invention. Alternatively, the set of cryptographic parameters **126** and/or **126***a* could be sent between two nodes as plaintext within an IP packet.

The set of cryptographic parameters **126** can include a list of available options for a set of asymmetric ciphering algorithms **141***a*, symmetric ciphering algorithms **141***b*, secure hash algorithms **141***c*, digital signature algorithms **141***d*, a key pair generation algorithm **141***e*, and also general cryptographic parameters **126***b*. Although not illustrated in FIG. **1***i*, a set of cryptographic parameters **126** could also include parameters for a key derivation function **141***f*, a shared secret algorithm **141***g*, and a secret ciphering algorithm **141***h*. In an exemplary embodiment, the list of available options for a set of asymmetric ciphering algorithms **141***a* could comprise a list of ECC standard curves **138** and also ECC parameters **137** which could comprise a list of numbers or values for an elliptic curve defining equation. A module **101** and a server **105** could utilize a custom or non-standard elliptic curve defining equation by sending and/or receiving a set of ECC parameters **137** in a set of cryptographic parameters **126**. Or, as illustrated in FIG. **1***i*, a node could select an ECC standard curve **138** from a list in a set of cryptographic parameters **126**. A set of cryptographic parameters **126** could include a private key length **126***e* for deriving a module private key **112**. A node could take similar steps for selecting an option from a list of available options for other fields as well in a set of cryptographic parameters **126** such as, but not limited to, symmetric ciphering algorithms **141***b*, secured hash algorithms **141***c*, etc. as illustrated in FIG. **1***i*, in order to derive a subset of cryptographic parameters **126***a*.

General parameters **126***b* can include a list of values that can be utilized in a set of cryptographic algorithms **141**. General parameters **126** could specify values for using and/or the format of (i) a security token **410**, (ii) an algorithm for processing an encrypted module identity string **110***a*, (iii) a certificate **122**, (iv) a public key identity **111***a*, (v) the authentication means of a derived public key **111** in a step **517** depicted and described below in connection with FIG. **5***b*, (vi) a padding scheme **126***c* for the set of cryptographic algorithms **141**, and/or (vii) key encoding rules **126***d*. Key encoding rules **126***d* can specify the format for sending and receiving a public key, such as the format of a derived module public key **111** sent to a server **105** in a step **516** depicted and described in connection with FIG. **5***b* below. Numerals depicted in FIG. **1***i* with a general parameters **126***b* include a "'" so show an association with the fields shown, as opposed to comprising the elements themselves. For example, the value of "security token length: 8 bytes" in a general parameters **126***b* with a label of "**401**'" illustrates the value of "security token length: 8 bytes" is associated with a security token **401** as opposed to being an exemplary the value for a security token **401**. Likewise, the value of "Public Key Identity: yes" with a label of **111***a*' illustrates that a general parameters **126***b* can specify a value for using a public key identity **111***a* as opposed to a public key identity **111***a* comprising a value of "Public Key Identity: yes", etc.

Within a general parameters **126***b* in a set or subset of a cryptographic parameters **126**, a field associated with module identity **110**, illustrated as "**110**'", can specify an algorithm to use for ciphering or obfuscating a module identity **110**. A general parameters **126***b* could specify the use of a secret ciphering algorithm ciphering **161** for encrypting a module identity **110**. In an exemplary embodiment, the general parameters **126***b* can specify the method of authentication for a derived module public key **111**, where the module **101** could use a step **517** below. Exemplary values in a general parameters **126***b* for the authentication of a derived module public key **111** include, but are not limited to, message digest with a secret key, ciphering with a symmetric key **127**, authenticating with a pre-shared public key, and module **101** sending a module digital signature **405** depicted and described in connection with FIG. **4** below. In accordance with preferred exemplary embodiments, a set of cryptographic parameters **126**, possibly in a set of general parameters **126***b*, can include both (i) values for a module **101** to use with a set of cryptographic parameters **141** for deriving a new module public key **111** and new module

private key **112**, and (ii) steps or values for a module **101** to authenticate the new, derived module public key **111** with a server **105**.

The set of cryptographic parameters **126** illustrated in FIG. **1***i* for a module **101** and the subset of cryptographic parameters **126***a* may be different than conventional technology, since the module **101** can select appropriate parameters or values for deriving its own module public key **111** and module private key **112**, as well as changing the parameters or values over time for the generation of subsequent or new module public keys **111** and module private keys **112**. Although not illustrated in FIG. **1***i*, general parameters **126***b* could also include a time value for module **101** to refresh the set of cryptographic parameters **126** with server **105**, such as periodically checking for a change in a preferred set of cryptographic parameters **126**. In order to minimize bandwidth and also power consumption for a module **101**, an exemplary time value for module **101** to check with server **105** for a new set of cryptographic parameters **126** could be an exemplary every 30 days. In another embodiment, server **105** could simply send a new set of cryptographic parameters **126** to module **101** each time new values may applicable.

As contemplated herein, a module **101** may be deployed with a monitored unit **119** for an extended period such as several years or longer, and a module public key **111** with a limited validity date could expire. In this case, after an extended period such as years, a preferred set of cryptographic parameters **126** could change, such as movement to longer private key lengths **126***e*, or the use of a new set of ECC standard curves **138**. In this case, when a new module public key **111** is required, possibly due to the expiration of a prior module public key **111**, module **101** could receive a new set of cryptographic parameters **126** and send a subset of the cryptographic parameters **126***a* before deriving a new module private key **112** and a new module public key **111** using the subset of cryptographic parameters **126***a* and a set of cryptographic algorithms **141**. In exemplary embodiments, a set of cryptographic parameters **126** or subset of cryptographic parameters **126***a* used by a module **101** can change over time.

A set of cryptographic parameters **126** could specify additional information to the exemplary data shown in FIG. **1***i*. Within a set of general parameters **126***b*, a name or address of a certificate authority **118** could be included, where module **101** could send a module public key **111** derived using a step **515** depicted and described in connection with FIG. **5***b*. A set of cryptographic parameters **126** could include other names and addresses of servers, such as a first server **105** in a set of servers **1010** where module **101** would first authenticate module identity **110** and obtain a symmetric key **127**, and module **101** could then communicate with a second server **105** using the symmetric key **127**. A set of cryptographic parameters **126** could specify that the source of new module private key **112** and module public key **111** could be internally derived by module **101**, as opposed to module **101** seeking a new module private key **112** from a local source, such as via a local network or a physical interface such as USB interface **101***v*. In addition, a set of cryptographic parameters **126** could include values for a random number generator **128**, such as specifying the use of a seed **128***b*, or a module seed file **139**, or the minimum length of a random number **128***a*. In addition, a plurality of different shared secret algorithms **141***g* and secret ciphering algorithms **141***h* could be used by a module **101** and a server **105**, and specific shared secret algorithms **141***g* and secret ciphering algorithms **141***h* can be selected in a set of cryptographic parameters **126**.

In exemplary embodiments, although not illustrated in FIG. **1***i*, a set of cryptographic parameters **126** or **126***a* can specify the use of multiple module private keys **112** and module public keys **111** concurrently. In an exemplary embodiment, a module **101** could use a first module private key **111** with asymmetric ciphering algorithms **141***a* for receiving symmetric keys **127**, and a second module private key **111** for deriving or calculating a module digital signature **405** (in FIG. **4** below). Further, a module **101** could communicate with a plurality of servers **105**, where a first server **105** could use a first set of cryptographic parameters **126** and a second server could use a second and different set of cryptographic parameters **126**. In order to maintain compatibility with the different servers **105**, a module **101** could use (i) a first module private key **112** and first module public key **111** that was derived using the first set of cryptographic parameters **126** for communicating with the first server **105**, and (ii) a second module private key **112** and second module public key **111** that was derived using the second set of cryptographic parameters **126** for communicating with the second server **105**. In order to keep track of potentially multiple sets of cryptographic parameters **126** and/or subsets of cryptographic parameters **126***a*, a module **101** and/or a server **105** could implement a set of cryptographic parameters token **126***c*. The token **126***c*, illustrated as an exemplary "Set A" in FIG. **1***i*, can be a value to represent a collection of cryptographic parameters **126**, and subsequently either module **101** or server **105** could refer to the set of cryptographic parameters **126** using the set of cryptographic parameters token **126***c* instead of communicating the full set of cryptographic parameters **126**.

As contemplated herein, a set of cryptographic parameters **126** could also include values for a module **101** to authenticate or communicate with one or multiple wireless networks **102**. In an embodiment, a wireless network **102** could require a specific symmetric ciphering algorithm **141***b*, and also a specific key derivation function **141***f* for generating derived shared keys **129***b*, and the specific values needed for module **101** to communicate with a wireless network **102** could be sent in a set of cryptographic parameters **126**. Other possibilities exist as well to those of ordinary skill in the art without departing from the scope of the present invention.

FIG. **1***j*

FIG. **1***j* is an illustration of a certificate that includes a PM public key, where the key comprises an elliptic curve cryptography key, in accordance with exemplary embodiments. Public and private keys in system **100** and other systems contemplated herein can utilize PM techniques other than RSA, such as the elliptic curve cryptography (ECC) public key **111** illustrated in FIG. **1***h*. One benefit of using ECC is that an equivalent level of security can be obtained for a much smaller key length. Also, energy may be conserved using ECC algorithms **154** compared to RSA algorithms **153**. An analysis of the energy conserved for ciphering, deciphering, signing, and verifying messages using ECC versus RSA is included in the paper titled "Energy Analysis of Public-Key Cryptography on Small Wireless Devices" by Wander et al (herein incorporated by reference). Smaller key lengths save bandwidth, memory, processing resources, and power, which are all valuable for a module **101** to conserve a battery **101***k* and usage of radio-frequency spectrum. For example, an ECC key length of 283 bits provides security similar to an RSA key length

of approximately 2048 bits. Module public key **111** can comprise an ECC key in an X.509 certificate, as illustrated in FIG. **1***g*.

Certificate **122** could include a signature **123**, where signature **123** can be signed using ECC signature techniques, such as the Elliptic Curve Digital Signature Algorithm (ECDSA) **158** with a secure hash such as SHA256 156. A signature **123** in a certificate **122** containing an elliptic public key **111** could also be signed using a DSA algorithm **167**. In order to generate signature **123**, the private key associated with either CA **118** or module provider **109** may also be an ECC-based private key (for ECDSA **158**). Note that the public key **111** in a certificate **122** could use a different asymmetric ciphering algorithm **141***a* than the algorithm used for signing, such that the public key **111** can be an ECC key, while the signature **123** could be generated with RSA algorithm **153** and/or key. Certificate **122** may also include a subset of cryptographic parameters **126***a* (or "parameters **126***a*"), where parameters **126***a* can specify an elliptic curve utilized with the module public key **111**. Parameters **126***a* could also include the start and end times for the validity of either public key **111** or certificate **122**. Other parameters **126***a* can be utilized in a certificate **122** as well, including parameters **126***a* recording a modulus for an RSA algorithm **153**.

Certificate **122** illustrated in FIG. **1***g* also illustrates an exemplary embodiment of the present invention. Over the lifetime of a module **101**, which could be a decade or longer, multiple module public keys **111** may be utilized. Exemplary reasons for the potential use of multiple different module public keys **111** include (i) the expiration of a certificate **122** (including expiration of a public key associated with a certificate authority **118** used in signature **123**), (ii) a need to change an elliptic curve specified in a parameters **126**, (iii) adding a new public/private key pair for connection with a different wireless network **102**, (iv) as increasing a key length utilized in a public/private key pair, (v) the transfer of ownership or control of module **101**, and/or (vi) module **101** connecting to a new server **105** that utilizes a different asymmetric ciphering algorithm (i.e. RSA instead of ECC). Other possibilities exist as well for reasons a module to derive a new module public key **111**. Note that the multiple module public keys **111** may also be utilized concurrently, such that (i) a first module public key **111** in a first certificate **102** can be utilized with a first server **105**, and (ii) a second module public key **111** (possibly derived using a different set of parameters **126** including using a different elliptic curve or asymmetric ciphering algorithm) can be utilized with a second server **105** and/or wireless network **102**.

In either case of (i) module **101** using multiple module public keys **111** concurrently, or (ii) module **101** using different module public keys **111** in sequence, a certificate **122** can preferably include a module public key identity **111***a* to specify the module public key **111** utilized in a certificate **122**. As illustrated in FIG. **1***j*, the module public key identity **111***a* could be included in the CN field, and the module identity **110** can be included in the OU field. Alternatively, the module public key identity **111***a* and module identity **110** can be appended together and used in the CN field. In this manner and according to preferred exemplary embodiments, a module public key identity **111***a* is utilized with both a module identity **110** and a module public key **111** within a certificate **122**. Also, as noted previously herein, the use of a certificate **122** may optionally be omitted, such that module **101** and server **105** share public keys without using certificates **122**, or a server **105** could use a certificate **122** and module **101** may omit a certificate **122** and other possibilities exist as well.

FIG. **1***k*

FIG. **1***k* is a graphical illustration of hardware, firmware, and software components for a server, in accordance with exemplary embodiments. The illustrated components for the server **105** in FIG. **1***k* include a central processing unit (CPU) **105***b*, a random access memory (RAM) **105***e*, a system bus **105***d*, storage **105***m*, an operating system **105***h*, and a module controller **105***x*. These elements can provide functions equivalent to the central processing unit (CPU) **101***b*, RAM **101***e*, system bus **101***d*, flash memory **101***w*, and an operating system **101***h* described above in FIG. **1***b*, respectively. In general, a server **105** can have higher-end components such as, but not limited to, a larger CPU **105***b* and greater RANI **105***e* in order to support communications with a plurality of modules **101**. Server **105** can comprise a general purpose computer such as, but not limited to, a rack mounted server within a data center or rack, or could also comprise a desktop computer or laptop. Server **105** could also be a specialized computer, with hardware and software selected for supporting a plurality of modules **101** connecting and communicating simultaneously. Operating system **101***h* can comprise an operating system appropriate for a server such as, but not limited to, Linux, Solaris®, or Windows® Server. Server **105** can preferably include at least one wired Ethernet connection with high bandwidth that is persistently connected to the IP Network **107**, while the IP Network **107** connection for module **101** may be transient as module **101** changes between sleep and active states. Module controller **105***x* can provide the server-side logic for managing communications and controlling module **101** using a module database **105***k*. Network controller **105***i* can provide functionality for communicating with external servers or nodes, such as, but not limited to, a wireless network **102** illustrated in FIG. **1***a*.

A module controller **105***x* and network controller **105***i* may be applications programmed in a language such as, but not limited to, C, C++, Java, or Python and could provide functionality to support authentication and communication with modules **101**, including M2M applications such as, but not limited to, remote monitoring of sensors and remote activation of actuators. Module controller **105***x* and network controller **105***i* could also be software routines, subroutines, linked libraries, or software modules, according to preferred embodiments. Many of the logical steps for operation of server **105**, module controller **105***x*, and/or network controller **105***i* can be performed in software and hardware by various combinations of physical interface **105***a*, system bus **105***d*, device driver **105***g*, and operating system **105***h*. A module controller **105***x* and network controller **105***i* can also access a set of cryptographic algorithms **141** (in FIG. **1***d* above) in order (i) to encrypt and decrypt data, and also (ii) process or generate a digital signature and verify received digital signatures, including message digest authentication. When server **105** is described herein as performing various actions such as, but not limited to, acquiring an IP address, monitoring a port, transmitting or sending a packet, receiving a message, or encrypting or signing a message, specifying herein that server **105** performs an action can refer to software, hardware, and/or firmware operating within server **105** performing the action. As contemplated herein, when a server **105** is described as performing an action such as, but not limited to, sending a response, receiving a message, verifying a digital signature, decrypting data, etc., in some embodiments a set of servers **1010** (illustrated in FIG. **10**)

can perform the actions for the server **105**. In this case, a server **105** could be a member of the set of servers **1010**.

The server **105** may store computer executable instructions such as, but not limited to, module controller **105***x* or network controller **105***i* on storage **105***m*. Storage **105***m* may comprise a disk drive, a solid-state drive, an optical drive, or a disk array. Module controller **105***x* (i) can manage communications with module **101** or a plurality of modules **101** and (ii) may be downloaded and installed on the server **105**. As noted previously and elsewhere herein, module program **101***i* and module controller **105***x* can preferably interoperate with each other in order to collect sensor data and control an actuator associated with a monitored unit **119**.

The network controller **105***i* and/or module controller **105***x* operating within server **105** illustrated in FIG. **1***k* can provide computer executable instructions to hardware such as CPU **105***b* through a system bus **105***d* in order to (i) receive a message from the module **101** and (ii) send a response, wherein the message can include sensor **101***f* data and the response can include an acknowledgement of the message and/or an instruction to the module **101**. The module controller **105***x* can enable the server **105** to send a response to a message from module **101** by recording data associated with module **101** in memory such as RANI **105***e*, where the data can include an instruction from module **101**, a destination IP:port number, a packet or packet header value, and the data can be processed using an encryption or ciphering algorithm or key, a digital signature algorithm or key, etc. The operating system **105***h* or the device driver **105***g* can write the data from RAM **105***e* to a physical interface **105***a* using a system bus **105***d* and an Ethernet connection in order to send the data via the IP Network **107** illustrated in FIG. **1***a*. Alternatively, the software program **105***i* and/or module controller **105***x* can write the data directly to the physical interface **105***a* using the system bus **105***d*.

The server **105** can utilize the physical interface **105***a* to receive data from a module **101** and/or wireless network **102** using a local area network such as Ethernet, although the physical interface **105***a* of server **105** could also utilize a wireless connection. The server **105** can listen or monitor for data from the IP Network **107** using port number and/or a TCP/UDP socket. The received data from a module **101** can be a message formatted according to an Internet packet or datagram or series of datagrams inside Ethernet packets and include information from a module **101** such as, but not limited to, a source IP address and port number, an identity of the module, sensor data that may be encrypted, and/or a digital signature of the module. The received data from wireless network **102** can comprise a series of datagrams formatted according to Internet Protocol and/or datagrams inside Ethernet packets. The received data or message from wireless network **102** can include information regarding wireless network **102** and/or server **105**, such as a source IP address and port number associated with wireless network **102**, an identity of the server, actuator instructions or commands for a module **101** that may be encrypted, and a digital signature associated with the wireless network **102**.

When server **105** receives messages or data, the operating system **105***h* or device driver **105***g* can record the received data from module **101** or wireless network **102** via physical interface **105***a* into memory such as RAM **105***e*. The network controller **105***i* or operating system **105***h* may subsequently access the memory in order to process the data received. The network controller **105***i* and/or module controller **105***x*, or operating system **105***h* can include steps to process the data recorded in memory and received from the module **101** or wireless network **102**, such as, but not limited to, parsing the received packet, decrypting data, verifying a digital signature with a key, or decoding sensor data included in a message from the module.

The server **105** and/or network controller **105***i* may communicate with wireless network **102** by sending and receiving packets over a LAN or the IP Network **107**, using a physical interface **105***a* and a wired connection such as Ethernet or possibly a wireless connection as well. The server **105** can use the physical interface **105***a* such as an Ethernet connection to send and receive the data from the IP Network **107**. For those skilled in the art, other steps are possible as well for an network controller **105***i* or operating system **105***h* within a server **105** to (i) send/receive a packet or message to/from a module **101** and (ii) send/receive a packet or message to/from an wireless network **102** without departing from the scope of the present invention. Network controller **105***i* and module controller **105***x* may optionally be combined within a server **105**, or alternatively distributed across different physical computers and function in a coordinated manner using a network.

The device drivers **105***g*, operating systems **105***h*, and/or module controller **105***x* could also optionally be combined into an integrated system for providing the server **105** functionality. Although a single physical interface **105***a*, device-driver set **105***g*, operating system **105***h*, module controller **105***x*, and network controller **105***i* are illustrated in FIG. **1***k* for server **105**, server **105** may contain multiple physical interfaces, device drivers, operating systems, software programs, module programs, and/or user interfaces. Server **105** may operate in a distributed environment, such that multiple computers operate in conjunction through a network to provide the functionality of server **105**. Also, server **105** may operate in a "virtualized" environment, where server **105** shares physical resources such as a physical CPU **105***b* with other processes operating on the same computer. And other arrangements could be used as well, without departing from the invention.

FIG. **1***m*

FIG. **1***m* is a graphical illustration of components within a server, in accordance with exemplary embodiments. Server **105** can include a module database **105***k*, a sub-server **105***w*, and a message preprocessor **105***y*. Server **105** can also include one or many sets of cryptographic parameters **126**, a secret ciphering algorithm ciphering **161**, and a secret ciphering algorithm deciphering **162**. In an exemplary embodiment, the elements illustrated within a server **105** in FIG. **1***m* may be stored in volatile memory such as RAM **105***e*, and/or storage **105***m*, and may also be accessible to a processor CPU **105***b* via a system bus **105***d*. In another exemplary embodiment, the module database **105***k*, sub-server **105***w*, and message processor **105***y* can comprise separate computers. Module database **105***k*, sub-server **105***w*, and message preprocessor **105***y* could represent either different processes or threads operating on a server **105**, or physically separate computers operating in conjunction over a network to perform the functions of a server **105**. Since server **105** can preferably support communications with a plurality of modules **101**, server **105** can utilize module database **105***k* to store and query data regarding a plurality of modules **101**, monitored units **119**, and the overall M2M service. The server **105** can store a plurality of module public keys **111** associated with each of a plurality of devices in the module database **105***k*. The server **105** can also store a plurality of shared secret network keys K **129***d* associated with each of a plurality of modules, where secret shared network key K **129***d* is also depicted and described in

connection with FIGS. **9***b* and **11**. The server **105** can use a module identity **110**, possibly in the form of a network module identity **110***b*, for a module **101**, received in a message to query the module database **105***k* and select the public key **111**, secret shared network key K **129***d*, a symmetric key **127**, and other data associated with the module **101**.

Although not illustrated in FIG. **1***m*, module database **105***k* can also record a pre-shared secret key code **134**, a set of cryptographic parameters **126** or **126***a*, and a module identity **110** for each module **101**, along with the pre-shared secret key **129***a* shown in FIG. **1***m*. In embodiments where server **105** functions as a home subscriber server (HSS), module database **105** could record authentication triplets of a RAND **912**, an RES **913** (both described in FIG. **9***b* below), and also a network authentication token. Examples of module database **105***k* could include MySQL, Oracle®, SQLite, hash tables, distributed hash tables, text files, etc. Module database **105***k* could reside within RAM **105***e* or storage **105***m*. Server **105** may also record a symmetric key **127**, where the symmetric key **127** can be associated with an expiration time **133**. Symmetric key **127** can also be recorded in a module database **105***k* or a sub-server **105***w*.

Message preprocessor **105***y* can process incoming packets and route them to an appropriate sub-server **105***w* using information contained in an incoming message, such as, but not limited to, a module identity **110** or **110***b*, a server identity **206** illustrated in FIG. **2** below, and/or a destination IP address. Sub-server **105***w* can include a server private key **105***c* and cryptographic algorithms **141**. A plurality of sub-servers **105***w* can be utilized by a server **105** in order to support communication with a plurality of modules **101**. The server private key **105***c* and module public key **111** can be utilized by module **101** to secure communication with server **105**, including the steps depicted and described in connection with FIG. **4** and FIG. **5***a* below. Cryptographic algorithms **141** may comprise a suite of algorithms or subroutines and are depicted and described in connection with FIG. **1***d*.

Server **105** may also comprise a collection of individual computers, where the individual computers could be either centrally located or geographically dispersed, but the individual computers may function in a coordinated manner over a network to operate as a server **105**. Server **105** may be a "virtualized" server, with computing resources shared with other processes operating on a computer. A server **105** as illustrated in FIG. **1***k* and FIG. **1***m* may also be operated by a wireless network **102**. Wireless network **102** could belong to or be associated with a mobile network operator **108**. The mobile network operator (MNO) could control and/or own a public land mobile network (PLMN), and exemplary large MNOs in the United States in 2013 include AT&T® and Verizon®. The wireless network **102** as illustrated in FIG. **1***a* could comprise the radio access portion of a mobile network operator's network, and a server **105** as illustrated in FIG. **1***k* and FIG. **1***m* could reside within the network portion for a mobile network operator. In the embodiments where server **105** is located on a mobile network operator's **108** network, the firewall **104** could optionally be omitted, such that a server **105** can directly communicate with module **101** when module **101** is attached or connected to, or attempts to attach or connect to wireless network **102**. Other possibilities exist as well for a server **105** to reside within a mobile network operator's **108** network without departing from the scope of the present invention.

FIG. **2**

FIG. **2** is a graphical illustration of an exemplary system, where a module sends a message to a server, and where the module receives a response to the message, in accordance with exemplary embodiments. Module **101** as depicted and described in FIG. **2** can operate as a wireless module **101**, although a wired connection to the IP Network **107** could alternatively be utilized. System **100** as illustrated in FIG. **2** includes RF signals **201**, module IP address **202**, port number **203**, module IP:port **204**, server port number **205**, server ID **206**, server IP:port number **207**, message **208**, response **209**, wireless network firewall address **210**, and firewall port binding packet **211**. Many of the elements illustrated within system **100** in FIG. **2** are also depicted and described in connection with FIG. 2 of U.S. patent application Ser. No. 14/039,401 (the contents of which are hereby incorporated by reference in their entirety). As contemplated herein, a wireless module **101** can comprise a module **101**, or in other words a wireless module **101** may be a module **101** that is wireless. Functions described as being performed by a wireless module **101** may also be performed by a wired module **101** (where connection to a wired network would be used instead of connection to a wireless network **102**). Also as contemplated herein and illustrated in FIG. **2**, the wording "module **101** sends a message **208**" can also be considered equivalent to "server **105** receives a message **208**". Likewise, the wording "server **105** sends a response **209**" can be considered equivalent to "module **101** receives a response **209**".

A wireless module **101** can wake from a dormant state in order perform (i) remote and automated monitoring and (ii) control functions such as, but not limited to, collecting a sensor **101***f* measurement, communicating with server **105**, and controlling an actuator **101***y*. If module **101** is connected to land-line power or a long-lasting external power source such solar power, then module **101** may remain in an active state and bypass a dormant state, although transmitting RF signals **201** may preferably only be utilized when communicating with wireless network **102** or sending data to and receiving data from wireless network **102** and/or mobile network operator **108**. The wireless module **101** can acquire an IP address **202** from the wireless network **102**. IP address **202** is illustrated as being an IPv6 address, but IP address **202** could also be an IPv4 address.

In order to transmit or send data from wireless module **101** to server **105**, a wireless module **101** can use module program **101***i* to collect data from a sensor **101***f* in order to update server **105**. Module program **101***i* can request a port number **203** from operating system **101***h* in order to have a source IP:port for sending data using IP protocols such as, but not limited to, TCP and UDP. The terminology "IP:port" as described herein refers to combining an IP address with a port number. Wireless module IP address **202** and port number **203** can be combined to form IP:port number **204**. IP:port number **204** can be utilized as a source IP:port number for packets transmitted from wireless module **101**, as well as a destination IP:port number for packets received by wireless module **101**, when communicating with server **105**.

In order to utilize IP Network **107**, module **101** may also need a destination IP address and port number in order to send packets to server **105**. Before sending data to server **105**, wireless module **101** preferably retrieves server IP address **106** and server port number **205** from RAM **101***e*. Server IP address **106** could be recorded in RAM **101***e* via (i) a DNS query using server name **206** or (ii) queries to mobile network operator **108** or wireless network **102**. CPU **101***b* may copy server IP address **106** and server port

number **205** from nonvolatile memory into volatile memory such as, but not limited to, a register for processing to send a packet to server **105**. Server name **206** could also be a server identity. (A) Server IP address **106** or server name **206** and (B) server port number **205** could be recorded in a nonvolatile memory such as, but not limited to, flash memory **101***w* and/or an eUICC **163** so that wireless module **101** can store the proper destination of packets transmitted or sent even when wireless module is dormant or shutdown. Server IP address **106** and server port number **205** can be combined into a server IP:port number **207**.

After collecting data from a sensor, module **101** can send a packet from IP:port **204** to IP:port **207**, and the packet could comprise a message **208** that may include the data from a sensor **101***f*. Note that message **208** does not need to include sensor data, and message could potentially be a periodic registration message or keep-alive message. As contemplated herein, the term "sensor measurement" can refer to data associated with or derived from a sensor **101***f*. A sensor measurement, can comprise a string containing data regarding a parameter of a monitored unit **119** and collected by a sensor **101***f*. The sensor measurement as sent in a message **208** can also represent a string (alphanumeric, binary, text, hexadecimal, etc.), where the string comprises a transformation or processing of sensor data collected by a CPU **101***b*, such including formatting, compressing, or encrypting, encoding, etc. of sensor data. A "sensor measurement" could comprise a plurality of data from a sensor **101***f*.

In order to minimize bandwidth and time required for RF signals **201** to be active, module **101** can send the message **208** as a single UDP datagram in accordance with a preferred exemplary embodiment. The single UDP datagram in this embodiment can preferably be the only packet sent from module **101** to server **105** or mobile network operator **108** during a wake state for the module **101** when the radio **101***z* is active and transmitting, such as, but not limited to, in a radio resource control (RRC) connected state. In other words, according to this preferred exemplary embodiment, the message **208** sent by module **101** can preferably be the only message or packet sent by the wireless module to the server **105** between dormant periods of module **101**. By sending message **208** as a single UDP datagram, both a battery **101***k* is conserved and utilization of valuable RF spectrum is reduced. Message **208** could also comprise a series of associated UDP messages.

Also, as contemplated herein, message **208** could comprise a related series of packets, so that message **208** could comprise multiple datagrams. As one example, if TCP is utilized as the transport protocol for message **208**, then the series of TCP messages including the initial handshake, one or more packets of payload data, and the closing of the connection could together comprise message **208**. As another example, if UDP or UDP Lite is utilized for the transport protocol, and payload data exceeds a maximum transmission unit (MTU) size for the UDP packet and the payload data is spread across multiple packets, then the multiple packets would comprise a message **208**. Further, a related series of packets comprising a message **208** could be identified by using the same source IP:port number as either (i) received by server **105** or (ii) sent by module **101**. In addition, a related series of packets comprising a first message **208** could be identified as a series of packets sent by module **101** before receiving a response **209** from a server, and packets sent after receiving a response **209** could comprise a second message **208**. Other possibilities for a message **208** to comprise multiple packets or datagrams may exist without departing from the scope of the present invention.

The UDP datagram for message **208** could also be formatted according to the UDP Lite protocol, as specified in IETF RFC 3828, which is also incorporated by reference herein. The term "UDP Lite" described in the present invention may also refer to any connectionless protocol widely supported on IP Network **107** where checksums may be partially disabled, thereby supporting the transfer of bit errors within a datagram. The advantages of UDP over TCP is that UDP can be quickly sent, while TCP requires a "handshake" with the server which requires more time and bandwidth, which would utilize more energy from battery **101***k*. According to an exemplary embodiment, both message **208** and response **209** can be TCP messages. In this exemplary embodiment, message **208** and response **209** could each comprise a series of TCP messages that can include a TCP SYN, SYN ACK, ACK, ACK w/data, FIN ACK, etc.

According to an exemplary embodiment, module **101** sends (and server **105** receives) the same sensor data in multiple copies of the same UDP packet. Each of the multiple copies of the same UDP packet can also optionally be formatted according to the UDP Lite protocol. As one example, wireless module sends three identical copies of the UDP or UDP Lite packet that include the same sensor data. The benefit of sending three copies of UDP Lite include (i) the RF signals **201** received by the base station **103** could include bit errors, which could result in a regular (RFC 768) UDP packet being dropped, since a bit error could result in a UDP checksum mismatch, as received and processed by wireless network **102**. Note that the use of checksums is mandatory in IPv6, and thus checksums cannot be fully disabled in IPv6. With UDP Lite packets transmitted by wireless module **101**, where the mandatory checksum for IPv6 can cover the packet header, wireless network **102** can forward all packets received, potentially including bit errors, to server **105** over the IP Network **107**.

Server **105** can receive the multiple copies of the UDP or UDP Lite packets, which could include bit errors received, and server **105** could compare or combine the multiple copies or each individual UDP Lite packet in order to remove bit errors. Note that UDP Lite is not required, and wireless module **101** could send the message **208** using a single UDP packet, or multiple copies of a regular UDP (i.e. non UDP Lite) packet. However, using UDP Lite with multiple packets sent can provide benefits such as if the sensor data is encrypted in the packet, then a single bit error would normally break the receiver's ability to decipher the data using a cryptographic key, unless the encrypted data was channel coded and the channel coding could recover from the bit error in order to present an error-free input of the encrypted data to a deciphering algorithm.

Further, between periods of sleep when a wireless module **101** becomes active and transmits RF signals **201**, module **101**, which may also comprise a wireless module **101**, could send the sensor data in a single UDP Lite packet where the packet includes channel coding, which can also be referred to forward error correction. Forward error correction could also be implemented by sending multiple copies of the same UDP packet. Note that since large segments of message **208** could include encrypted or hashed data, those segments may not be appropriate for compression since the data is often similar to random strings which are not readily compressed. Channel coding techniques for the data in message **208** could include block codes and convolution codes. Block

codes could include Reed-Solomon, Golay, BCH, Hamming, and turbo codes. According to a preferred exemplary embodiment, data within message **208** is sent as a UDP Lite packet using a turbo code to correct multiple bit errors within a packet or datagram sent by module **101** and received by server **105**.

In system **100** illustrated in FIG. **2**, server **105** can use IP:port **207** to receive the packet from wireless module **101** and sent from source IP:port **204** to IP:port **207**, and the packet could comprise a message **208** that may include the data from a sensor associated with module **101** or monitored unit **119**. As contemplated herein, a message **208** illustrated in FIG. **2** does not need to include sensor data and other data could be transmitted or sent, such as, but not limited to, a server instruction **414** (described in FIG. **4** below), or other data pertaining to module **101** or a monitored unit **119**. Note that server **105** can use IP:port **207** to receive a plurality of messages **208** from a plurality of wireless modules **101**. Server **105** preferably listens for UDP packets on IP:port **207** or monitors IP:port **207**, although TCP packets could be supported as well. If server **105** receives multiple copies of the same UDP packet from module **101**, server **105** preferably includes a timer to drop duplicate packets received outside a timer window such as, but not limited to, an exemplary 5 seconds.

After receiving the message **208** and processing the message according to the techniques described below such as, but not limited to, in FIG. **4**, server **105** can send a response **209**. Since module **101** may belong to a wireless network **102** which includes a firewall **104**, the source IP:port of the message **208** received by server **105** could be different from the source IP:port **204** utilized by wireless module **101**. The source IP:port in message **208** could be changed if firewall **104** performs network address translation (NAT), as one example. Server **105** may not readily know if a NAT translation has been performed on the message **208**. Alternatively, firewall **104** may not perform NAT, but could still block data from the IP Network **107** which does not properly match the firewall rules. As one example, firewall **104** could be a symmetric firewall (but without NAT functionality), where only packets from IP:port **207** to IP:port **204** are allowed to pass the firewall after message **208** has been sent by module **101**.

In either case, where firewall **104** may or may not perform NAT routing, server **105** preferably sends the response **209** from the server IP:port **207** to the source IP:port it receives in message **208**. According to a preferred exemplary embodiment, response **209** is a UDP packet sent from server **105** with (i) a source IP:port **207** and (ii) a destination IP:port equal to the source IP:port received in message **208**, as illustrated in packet **209***a*. The example use of source and destination IP:ports in message **208** and response **209** are also illustrated in FIG. **6***a* below. In this manner, the UDP packet can traverse a firewall **104**, if firewall **104** is present. If firewall **104** is present and performs NAT routing, then firewall **104** can receive the response **209** and change the destination IP address and port within response **209** to equal IP:port **204**.

According to exemplary preferred embodiments, module **101** may also obtain power from a land-line source, such as, but not limited to, a traditional 120 volt wall socket, or possibly power over Ethernet, and other non-transient power sources could be utilized as well. In this case, module **101** may remain persistently connected to the Internet through either a wireless network **102** or a wired connection such as, but not limited to, Ethernet. In other words, module **101** may omit entering periods of sleep or dormancy where inbound packets from the Internet would not be received due to the sleep state of module **101**. Consequently in an exemplary embodiment, module **101**, which does not sleep for periods longer than a minute, may preferably periodically send a firewall port binding packet **211** from IP:port **204** to IP:port **207** in order to keep ports and addresses within a firewall **104** and/or firewall **124** open to communications between module **101** and server **105**. Firewall port binding packet **211** can comprise a packet that is sent periodically using a timer interval that is shorter than the port-binding timeout period **117** on a firewall **104** and firewall **124**.

Continuing with this exemplary embodiment where module **101** does not sleep for periods longer than approximately one minute, if UDP is utilized for message **208** and response **209**, then a small UDP packet comprising firewall port binding packet **211** can be sent periodically such as, but not limited to, every seconds. If TCP is utilized for message **208** and response **209**, then a small TCP packet comprising firewall port binding packet **211** can be sent periodically such as, but not limited to, every 4 minutes. Other possibilities for the timing of sending firewall port binding packet **211** are possible as well. By sending firewall port binding packet **211** periodically, server **105** can send module **101** a response **209**, (i) which could include a module instruction **502** as explained in FIG. **5***a*, at (ii) time intervals between message **208** and response **209** that are longer than the firewall port binding timeout values **117** of firewall **104** and/or firewall **124**. Without firewall port binding packet **211**, if (A) a response **209** sent from server **105** at an exemplary 180 seconds after receiving message **208**, such as, but not limited to, after a firewall port binding timeout value **117** of firewall **104** of an exemplary 60 seconds transpired, then (B) response **209** would be dropped by firewall **104** and the response **209** would not be received by module **101**.

FIG. **3***a*

FIG. **3***a* is a flow chart illustrating exemplary steps for a module to send sensor data to a server, in accordance with exemplary embodiments. As illustrated in FIG. **3***a*, FIG. **3***a* may include the data reporting steps **101***x* used by a module **101** in a module program **101***i*, where data reporting steps **101***x* and a module program **101***i* are depicted and described in connection with FIG. **1***b* above. The processes and operations, including data reporting steps **101***x*, described below with respect to all of the logic flow diagrams may include the manipulation of signals by a processor and the maintenance of these signals within data structures resident in one or more memory storage devices. For the purposes of this discussion, a process can be generally conceived to be a sequence of computer-executed steps leading to a desired result. These steps usually require physical manipulations of physical quantities. Usually, though not necessarily, these quantities take the form of electrical, magnetic, or optical signals capable of being stored, transferred, combined, compared, or otherwise manipulated. It is convention for those skilled in the art to refer to representations of these signals as bits, bytes, words, information, elements, symbols, characters, numbers, points, data, entries, objects, images, files, or the like. It should be kept in mind, however, that these and similar terms are associated with appropriate physical quantities for computer operations, and that these terms are merely conventional labels applied to physical quantities that exist within and during operation of the computer.

It should also be understood that manipulations within the computer are often referred to in terms such as listing, creating, adding, calculating, comparing, moving, receiving, determining, configuring, identifying, populating, loading,

performing, executing, storing etc. that are often associated with manual operations performed by a human operator. The operations described herein can be machine operations performed in conjunction with various input provided by a human operator or user that interacts with the computer.

In addition, it should be understood that the programs, processes, methods, etc. described herein are not related or limited to any particular computer or apparatus. Rather, various types of general purpose machines may be used with the following process in accordance with the teachings described herein.

The present invention may comprise a computer program or hardware or a combination thereof which embodies the functions described herein and illustrated in the appended flow charts. However, it should be apparent that there could be many different ways of implementing the invention in computer programming or hardware design, and the invention should not be construed as limited to any one set of computer program instructions.

Further, a skilled programmer would be able to write such a computer program or identify the appropriate hardware circuits to implement the disclosed invention without difficulty based on the flow charts and associated description in the application text, for example. Therefore, disclosure of a particular set of program code instructions or detailed hardware devices is not considered necessary for an adequate understanding of how to make and use the invention. The inventive functionality of the claimed computer implemented processes will be explained in more detail in the following description in conjunction with the remaining Figures illustrating other process flows.

Further, certain steps in the processes or process flow described in all of the logic flow diagrams below must naturally precede others for the present invention to function as described. However, the present invention is not limited to the order of the steps described if such order or sequence does not alter the functionality of the present invention. That is, it is recognized that some steps may be performed before, after, or in parallel other steps without departing from the scope and spirit of the present invention.

The processes, operations, and steps performed by the hardware and software described in this document usually include the manipulation of signals by a CPU or remote server and the maintenance of these signals within data structures resident in one or more of the local or remote memory storage devices. Such data structures impose a physical organization upon the collection of data stored within a memory storage device and represent specific electrical or magnetic elements. These symbolic representations are the means used by those skilled in the art of computer programming and computer construction to most effectively convey teachings and discoveries to others skilled in the art.

At step **301**, before final distribution of the module to a sales channel, equipment distributors, or end users, a module private key **112** and module identity **110** could be recorded in non-volatile memory **101***w* of the module **101**. The module private key **112** could be a private key formatted according to the X.500 series of standards published by the International Organization for Standardization (ISO) in ISO/IEC 9594 or similar and subsequent standards, or alternatively according to another format including a propriety format. The module private key **112** could be formatted using RSA encryption algorithms or ECC encryption algorithms, and other possibilities exist as well for the format of encryption and/or decryption keys without departing from the scope of the present invention. Note that step **301** contemplates an alternative to the case where a module **101** derives its own public and private keys using key pair generation algorithms **141***e*. Thus, the present invention also contemplates that a module private key **112** is derived outside module **101** and loaded into nonvolatile memory **101***w*. Note that in this case, where module private key **112** is loaded from an external source to module **101**, that module **101** could still utilize other features contemplated herein, such as if module **101** needed to derive public and private keys in the future after the initial step **301**.

Module identity **110** can be a unique identifier associated with module **101**, and can represent a number or a string. The module private key **112** and module identity **110** could be recorded in non-volatile memory **101***w* by the manufacturer, or a service provider. Alternatively, the module private key **112** and module identity **110** could be recorded in non-volatile memory **101***c* by the end users. At step **302**, the module is distributed and installed in physical proximity to a monitored unit **119**. Although step **301** is illustrated as occurring before step **302** according to an exemplary embodiment, step **301** can take place after step **302** or concurrently with step **302**, and other possibilities exist as well without departing from the scope of the present invention.

After installation of the module **101**, module **101** can wake from a dormant state in step **303**. The dormant state can comprise a state of low power usage as described in FIG. **1***c*, in order to conserve battery life and wired bandwidth or wireless spectrum resources. As noted in FIG. **1***c*, module **101** can utilize a bootloader program **125** in order to initiate operations from a sleep or dormant state. At step **303**, the module private key **112**, module identity **110**, server identity **206**, and/or server address **106** could be moved from non-volatile memory **101***w* into RAM **101***e*. At step **304**, the module **101** can read the module private key **112** and module identity **110** recorded in RAM **101***e*, and also record the server public key **114** and server IP:port **207**. The server public key **114** and server IP:port **207** could also be either locally stored previous to step **304** in a non-volatile memory **101***w*, or obtained through the IP Network **107** via a query to mobile network operator **108**. As one example, module **101** could obtain the server public key **114** by establishing an Internet connection through a network such as a wireless network **102** and downloading the server public key **114** from server **105**.

If module **101** utilizes a sleep or dormant state (according to exemplary sleep or dormant states depicted and described in connection with FIG. **1***c* of U.S. patent application Ser. No. 14/023,181, which is herein incorporated by reference) in order to conserve power consumption or energy utilization, then according to a preferred exemplary embodiment at step **304**, after waking, module **101** can preferably read from nonvolatile such as a flash memory **101***w* each of (i) module private key **112**, (ii) module identity **110**, (iii) the server public key **114**, (iv) server IP:port **207**, and (v) data reporting steps **101***x*. The location of server **105** could be obtained via a DNS query using the server identity **206**. Although not illustrated in FIG. **3***a*, server identity **206** and server IP:port **207** could also be recorded in non-volatile memory at step **301**. Other means are possible as well for module **101** to obtain server public key **114** and server IP:port **207**.

At step **305**, the module **101** can read data from a sensor **101***f* The data can comprise information regarding a monitored unit **119**, as illustrated in FIG. **1***a*. As referenced herein, the data collected at step **305** may comprise a sensor measurement **305** or sensor data **305**. At step **306**, the module can utilize cryptographic algorithms **141** to (i)

encrypt the data from sensor **101***f* using the server public key **114** and (ii) sign the encrypted data using the module private key **112**. Note that a symmetric ciphering algorithm **141***b* may be used at step **306**, but since the symmetric key **127** may be derived using the server public key **114**, the sensor data **305** can be encrypted using the server public key (indirectly) at step **306**. According to a preferred exemplary embodiment, the module can add channel coding to the data resulting from the steps taken in the previous sentence, although the channel coding can optionally be omitted. A more detailed description of the steps for encrypting and signing data from the sensor are included in FIG. **4***a* below.

After encrypting and signing sensor data, the module can send the data to the server **105** in message **208**, where message **208** is formatted and sent according to a either a TCP or UDP packet. An exemplary format of message **208** is also depicted and described in connection with FIG. **6** below. Message **208** could be sent using the UDP Lite protocol, although the message could also be sent in a TCP datagram, after completing the initial TCP "handshakes" with server **105**. Message **208** in the form of a UDP or TCP datagram can be sent from the module IP:port **204** to the server IP:port **207**. Message **208** can also comprise sending the sensor data in multiple datagrams, including two or more copies of the same data. Although not illustrated in FIG. **3***a*, upon the first communication with a server **105**, according to an exemplary embodiment, module **101** can send a certificate **122** to server **105**, where certificate **122** would normally include module public key **111**. Server **105** could utilize a certificate **122** to verify a module identity **110**.

As illustrated in FIG. **3**, the module **101** can then receive reply from server **105** to the message **208** in the form of a response **209**. Response **209** can be encrypted with the module public key **111** and signed with the server private key **105***c*, as depicted and described in connection with FIG. **5***a* below. An exemplary format of the response **209** is also depicted and described in connection with FIG. **6** below. The module **101** can receive the encrypted response **209** to message **208** in a datagram **209***a* that is sent from server IP:port **207** and received at module IP:port **204**.

At step **307***a*, the module **101** can process the response **209** by decrypting the response **209** using the module private key **112** and cryptographic algorithms **141**. At step **307***b*, module **101** can verify a digital signature of response **209** using the server public key **114** and cryptographic algorithms **141**. Additional details regarding step **307***a* and **307***b* are depicted and described in connection with FIG. **5***a* below. Note that encryption of response **209** may be optionally omitted and a digital signature in response **209** may also be optionally omitted. Although not shown in FIG. **3***a*, if the module **101** cannot decrypt the response **209** or verify the digital signature of response **209**, then the module **101** can drop the response **209** and optionally send message **208** again.

After the module **101** successfully processes response **209** in steps **307***a* and **307***b*, as shown in step **308**, the module **101** can sleep the CPU **101***b* and/or shutdown the radio **101***z*. Step **308** could comprise the module **101** entering the "radio off" state **505***a* as depicted and described in connection with FIG. **6***b* of U.S. patent application Ser. No. 14/023,181 (the contents of which are hereby incorporated by reference in their entirety), and/or entering the "CPU off" state **505***b* as described in FIG. **6***c* of U.S. patent application Ser. No. 14/023,181. Step **308** could also comprise the module **101** sending a detach message to a wireless network **102** as depicted and described in connection with FIG. **6***a* of U.S. patent application Ser. No. 14/023,181. Thus, according to a preferred exemplary embodiment, module **101** can omit sending or receiving any further radio resource control messages after processing the encrypted and/or signed response **209**, when completing step **308**.

After entering the sleep state in step **308**, the module can then periodically check a sleep timer at step **309**, and wake from sleep if the timer has expired and report subsequent data from a sensor **101***f* to a server **105** by returning to step **305**.

FIG. **3***b*

FIG. **3***b* is a graphical illustration of components within a received profile and an activated profile for an embedded universal integrated circuit card (eUICC), in accordance with exemplary embodiments. The need for supporting M2M applications, where swapping out a SIM card or UICC card may not be practical, supports the use of an alternative embedded universal integrated circuit card (eUICC). Note that the development of an eUICC for M2M applications could extend to mobile phones and smart phones generally in the future, such that a SIM card or UICC would not need to be distributed to end users for insertion into mobile phones or M2M devices, thereby reducing costs and increasing the flexibility of modules **101** to quickly and easily connect with different wireless networks **102**. In September of 2013, ETSI published an outline of the requirements for an eUICC specification in ETSI TS 103 383 v12.2.0, while many of the implementation details remain under study and review as of November 2013. ETSI technical specification TS 103 383 v12.2.0 is herein incorporated by reference in its entirety.

A primary feature of an eUICC **163** can be the automated and remote handling of network access credentials. An eUICC **163** can support subscriber and user equipment access a wireless network **102** such as a PLMN that supports ETSI standards such as LTE and future mobile operator networks. The electronic distribution of network access credentials such as the traditional Ki or K pre-shared secret key in mobile networks faces significant security challenges in the form of a profile for an eUICC **163**. FIG. **3***b* illustrates an exemplary embodiment, where the internal derivation of a module private key **112** and a module public key **111** in the present invention can provide in a secure and flexible manner either (i) essential network access credentials directly (where network access credentials can use a module private key **112** and module public key **111**), or (ii) the support of the derivation of a secret shared network key K **129***d* (thereby allowing network access credentials to remain both secure and fully compatible with deployed wireless networks reliant on key K).

A received eUICC profile **311** could provide information for connecting to a wireless network **102**. A received eUICC profile **311** can include much or all of the same information available to a module **101** from a traditional physical SIM card or UICC. The received eUICC profile **311** can comprise a profile for the eUICC **163** that is received by module **101**. The module **101** can receive the profile **311** via a radio **101***z* or a network interface **101***a* such as a usb interface **101***v* (in embodiments where a manufacturers, distributor, module provider **109**, or end user load an initial received profile **311**). An eUICC **163** can support multiple profiles in order for a module **101** to connect with multiple different wireless networks **102** that support ETSI and similar standards for wireless WANs. A received eUICC profile **311** could also comprise a file or a set of data that is encrypted using any of a symmetric ciphering algorithm **141***b*, an asymmetric ciphering algorithm **141***a*, or potentially a secret ciphering algorithm **141***h*. The file or set of data which includes

network access credentials **312** for a wireless network **102** can comprise a received eUICC profile **311**. The encryption of a received eUICC profile **311** is not illustrated in FIG. **3***b*, and for clarity the received eUICC profile **311** is illustrated in FIG. **3***b* in plaintext form. As contemplated herein, received eUICC profile **311** may be referred to as profile **311**, and activated eUICC profile **311** may be referred to as profile **313**. Profile **311** can be a file or set of data that is (i) received by module **101** and (ii) includes network access credentials **312**. Profile **313** can be a file or set of data that is (i) selected and/or activated by module **101** in a profile activation step **316**, and (ii) includes network access credentials **314**.

In addition, according to a preferred exemplary embodiment, a received eUICC profile **311** is encrypted with a symmetric ciphering algorithm **141***b* and a derived shared secret key **129***b* as a symmetric key **127** for the symmetric ciphering algorithm **141***b*. The derived shared secret key **129***b* could be derived using a key derivation function **141***f* and input of at least an initial module private key **112***b*. The key derivation function **141***f* could comprise an ECDH **159** key exchange, such that the network public key **165***b* could also be input into the key derivation function, where the cryptographic parameters for an ECDH **159** comprise a base point G. Consequently, in an exemplary embodiment, module **101** can receive the profile **311** and decrypt the profile **311** using the initial module private key **112***b*. In other words, the initial module private key **112***b* can be input into an ECDH **159**, and the resulting derived shared secret key **129***b* (which would be mutually derived by a server **105**) could be used with a symmetric ciphering algorithm **141***b* for a module **101** to decrypt the received profile **311**. In another embodiment, the initial module private key **112***b* could comprise a symmetric ciphering key **127**, such that module **101** can decrypt the profile **311** directly using the initial module private key **112***b* and a symmetric ciphering algorithm **141***b* (and a server **105** associated with an eUICC subscription manager **164** could encrypt the profile **311** using the initial module private key **112***b*.

In exemplary embodiments, the received eUICC profile **311** can include a shared secret key **510**, where the shared secret key **510** can be used to authenticate a derived module public key **111** in a set of activated mobile network operator (MNO) network access credentials **314** after a profile activation step **316**. A shared secret key **510** is also depicted and described in further detail in connection with FIG. **5***b* below. A shared secret key **510** within a received eUICC profile **311** may be optionally omitted, and an initial key K **325** could be used by module **101** to securely and/or authoritatively send a derived module public key **111** (and/or a key K module token **1103**) to a wireless network **102**, as depicted and described in FIG. **5***b*, FIG. **7**, and FIG. **9***b* below.

In exemplary embodiments, the received eUICC profile **311** can include an initial key K **325**, which could comprise a standard shared secret key K for accessing wireless network **102** (such as a key K contemplated in 3GPP TS 33.401 V12.9.0 FIGS. **6.2-1** and related standards). The initial key K **325** with network module identity **110***b* can be used by module **101** to initially connect with wireless network **102**. Upon or after the initial connection from module **101**, wireless network **102** can receive cryptographic data from module **101** such as, but not limited to, a derived module public key **111** and/or a key K module token **1103** (depicted and described in connection with FIG. **11** below). After sending the cryptographic data using the initial key K **325**, module **101** and mobile network operator **108** could mutually derive the new secret shared network key K **129***d* illustrated in FIG. **3***b* (using steps depicted and described in connection with FIG. **9***b* and FIG. **11** below). Module **101** and mobile network operator **108** could subsequently (i) record the derived, secret shared network key K **129***d* recorded by a module **101** within an activated eUICC profile **313** in an eUICC **163**, and (ii) use the derived, secret shared network key K **129***d* with the network module identity **110***b* as a set of activated mobile network operator network access credentials **314**. Additional details for using a module private key **112**, module public key **111**, and a key K module token **1103** in order to derive a mutually shared secret shared network key K **129***d* is depicted and described in additional Figures below.

As contemplated herein, a received eUICC profile **311** and an activated eUICC profile **313** can comprise versions or subsets of profiles for an eUICC contemplated in ETSI specification TS 103 383 v12.2.0 and related standards. Also as contemplated herein, a received eUICC profile **311** can be referred to as a "received profile", and likewise an activated eUICC profile **313** below can be referred to as an "activated profile". A received eUICC profile **311** can include a set of cryptographic parameters **126**, a set of network parameters **310**, and a received mobile network operator (MNO) network access credentials **312**. The received MNO network access credentials **312** could include a network module identity **110***b*, and the network module identity **110***b* could comprise an IMSI number or similar network identifier. In an exemplary preferred embodiment, the received MNO network access credentials **312** does not include a module private key **112** and corresponding module public key **111**, and these keys can be derived by a module **101** and subsequently included in an activated eUICC profile **313** below. The received MNO network access credentials **312** can include an initial key K **325** for initial communication with a wireless network **102** for a mobile network operator **108**. A set of cryptographic parameters **126** are depicted and described in connection with FIG. **1***d* and FIG. **1***i* and other Figures herein.

The set of network parameters **310** could comprise a list of values and settings for a module **101** to utilize in connecting with a mobile network **101**. The settings could include a list of numbers or strings for values such as (i) allowed frequencies or frequency bands to scan, (ii) preferred access lists for roaming onto other wireless networks, (iii) criteria for a module **101** to select base stations in idle mode, (iv) support for emergency services, (v) supported languages or character encoding, etc. While a received eUICC profile **311** is activated, the network module identity **110***b* can be uniquely associated with a module identity **110**, and thus a network module identity **110***b* could comprise a module identity **110**, in order to identify module **101** with a wireless network **102**. A received eUICC profile **311** could also include a network public key **165***b*, which could provide functionality equivalent for a server public key **114**, with additional differences between a network public key **165***b* and a server public key **114** could be (i) network public key **165***b* can be associated with entities such as MNO **108** or eUICC subscription manager **164**, and (ii) network public key **165***b* can be associated with network private key **165***a*. Network public key **165***b* could also be associated with a plurality or collection of servers **105**, such as the set of servers **1010** illustrated in FIG. **10**, while a server public key **114** could be associated with a particular server **105**. As illustrated in FIG. **1***c*, the network public key **165***b* can be recorded in the eUICC **163** directly instead of within a

received eUICC profile **313**, and other possibilities exist as well without departing from the scope of the present invention.

In exemplary embodiments, a received eUICC profile **311** could be stored or recorded in a nonvolatile memory of module **101** such as, but not limited to, a flash memory **101***w*. An initial, first received eUICC profile **311** could be loaded into an eUICC **163** of module **101** by a manufacturer during manufacturing of module **101**, a distributor during distribution of module **101**, or a technician or end-user upon installation or receipt of module **101**. The initial, first received eUICC profile **311** could also be recorded in a nonvolatile memory such as a ROM **101***c*, and a manufacturer or module provider **109** could write the initial, first received eUICC profile into the ROM **101***c* before distribution, and other possibilities exist as well. Note that and additional, second received eUICC profile **311** (or a plurality of received eUICC profiles **311**) could be received by a module **101** after connection to an initial wireless network **102** using the initial, first received eUICC profile **311**. Other possibilities exist as well for a module **101** to receive and record a received eUICC profile **311** without departing from the scope of the present invention. The second, received eUICC profile **311** could be received by a module **101** from an eUICC subscription manager **164** (such as in a response **209** from a server **105** operated by a subscription manager **164**).

A module **101** could convert a received eUICC profile **311** into an activated eUICC profile **313**, after waking from a dormant state in order to connect with an initial wireless network **102** using a profile activation **316** step. For a profile activation **316** step, a module **101** could populate or provide the received MNO network access credentials **312** with a derived module private key **112** and a derived module public key **111**. In this manner, a profile activation step **316** can take a step to convert a received eUICC profile **311** into an activated eUICC profile **313**, and other steps for activation of a received eUICC profile **311** may be required as well. Within a profile activation step **316**, a module **101** could use the set of cryptographic parameters **126** within the received eUICC profile **311** and a set of cryptographic algorithms **141**, including a key pair generation algorithm **141***e* and a random number generator **128** in order to derive the module private key **112** and a corresponding module public key **111**. The processing, generation, and/or derivation by a module **101** of a module PM key pair **315** in a profile activation step **316** is also depicted and described in further detail along with a step **515** in FIG. **5***b* below.

The derived module private key **112** and derived module public key **111** could comprise a first derived module PM key pair **315**. By populating or associating the received MNO network access credentials **312** with a derived module private key **112** and a corresponding module public key **111** in a profile activation step **316**, the module **101** can convert, transform, or process the received MNO network access credentials **312** into an activated MNO network access credentials **314** within an activated eUICC profile **313**, whereby the activated eUICC profile **313** can include or be associated with the derived module private key **112** and a corresponding module public key **111**. Within an activated eUICC profile **313**, the derived module private key **112** and a corresponding module public key **111** could be recorded or associated with a set of activated MNO network access credentials **314**. The activated eUICC profile **313** could be recorded in an eUICC **163**. In another exemplary embodiment, the recording by a module **101** of a derived module private key **112** and a corresponding module public key **111** can occur at a separate time than a profile activation step **316**, although the module PM key pair **315** may preferably be recorded by a module **101** before module **101** completes a connection to a wireless network **102**. For example, the module **101** could potentially "pre-populate" or "pre-associate" the received MNO network access credentials **312** with a derived module PM key pair **315** before a profile activation step **316**. Note that a derived module private key **112** and a corresponding module public key **111** may optionally not be recorded directly within an activated eUICC profile **313**, but rather can be separately associated by a module **101** or an eUICC **163** with an activated eUICC profile **313**.

In exemplary embodiments, the first activated eUICC profile **313** could be deactivated and continued to be recorded by a module **101**, along with the first derived module PM key pair **315**, for potential later use. The module **101** could subsequently activate a second received eUICC profile **311**, including populating or associating the second received eUICC profile **311** with a second, different, derived module PM key pair **315** (i.e. different than the first derived module PM key pair **315**) in order to connect with a second wireless network **102** for a second mobile network operator **108** using a second activated MNO network access credentials **314** with the second, different, derived module PM key pair **315**. In other words, a module **101** could use a profile activation step **316** a second time with the second received eUICC profile **311**, resulting a second activated eUICC profile **313** where the first activated eUICC profile **313** had been deactivated. Although not illustrated in FIG. **3***b*, an activated eUICC profile **313** can optionally continue to record the initial key K **325** from the received eUICC profile **311** before a profile activation step **316**.

Upon reactivation of the first activated eUICC profile **313** (which could be deactivated in order to use the second received eUICC profile **311** as described in the paragraph above) in order to connect with the initial wireless network **102** a second time, the module **101** could either (i) reuse the first derived module PM key pair **315**, or (ii) derive a new derived module PM key pair **315**. Thus, a profile activation step **316** could populate a received eUICC profile **311** with a derived module PM key pair **315** if the received eUICC profile **311** does not already include a derived module PM key pair **315**, but a profile activation step **316** could reuse an existing derived module PM key pair **315** for reactivating a previously used (but deactivated) activated eUICC profile **313**. In another embodiment, a profile activation step **316** could repopulate a previously used (but deactivated) activated eUICC profile **313** with a new derived module PM key pair **315**.

In exemplary embodiments, a module **101** and a wireless network **102** could perform many additional steps in order for a module **101** to utilize a received eUICC profile **311** and an activated eUICC profile **313**, including: populating an activated eUICC profile **313** with other data, encrypting and decrypting a received eUICC profile **311**, providing access to a wireless network **102** to control or update an activated eUICC profile **313** or a received eUICC profile **311**, implementing policies for the remote management of an eUICC **163**, installing or loading an eUICC profile, deleting an eUICC profile. Profiles received and activated by a module **101** using an eUICC **163** could be provided and managed by an eUICC subscription manager **164**, in addition to many other steps and procedures. These additional steps and procedures for the utilization of an eUICC **163**, other than steps and elements described in FIG. **3***b* including (i) the use of a derived module PM key pair **315**, (ii) deriving a secret

shared network key K **129***d*, and (iii) using an initial key K **325** but then subsequently the secret shared network key K **129***d*, are known to those of ordinary skill in the art and thus are not described in additional detail herein. Additional steps related to a module **101** using a profile activation **316** step to derive and utilize a module PM key pair **315** as a basis for (i) network access credentials, (ii) the secure authentication and verification of a module identity **110** (possibly comprising a network module identity **110***b*), and (iii) encryption or ciphering of data transmitted from or received by a module **101**, are depicted and described in additional Figures below.

FIG. **4**

FIG. **4** a is a flow chart illustrating exemplary steps for a module to process a message, including encrypting sensor data and sending a digital signature, in accordance with exemplary embodiments. The steps illustrated in FIG. **4** may comprise step **306** illustrated in FIG. **3***a* above. Since message **208** and response **209** may traverse the wireless network **102** and IP Network **107**, according to an exemplary preferred embodiment, a module **101** and a server **105** can take additional steps in order to maintain security of a system **100**. Since module **101** could connect from a wide variety of networks, such as LAN, wireless LAN, wireless WAN, etc., server **105** may optionally support module **101** connecting from any valid IP address, including addresses outside of a mobile network operator's **108** wireless network **102**. Module **101** can process a message **208** using the sequence of steps illustrated in FIG. **4**. For additional clarification, an exemplary format of a message **208**, using the exemplary steps of FIG. **4**, is illustrated in FIG. **6** below. Note that the security methods described herein are optional, and message **208** and response **208** can be sent without the additional security steps described herein, but the use of these security steps may be preferred. FIG. **4** can contain the messages and steps shown within step **306** of FIG. **3***a*, where a module **101** processes message **208** before sending it to server **105** through the wireless network **102** and IP Network **107**.

As illustrated in FIG. **4**, in preparing a message **208** to send to server **105**, module **101** can utilize a sensor measurement **305**, where the sensor measurement **305** comprises sensor data acquired by a sensor **101***f* associated with module **101**. A sensor measurement **305** is also depicted and described in connection with FIG. **1***c* above, and may comprise a string or number containing data regarding a parameter of a monitored unit **119**. Sensor measurement **305** can also comprise a plurality of measurements or processed sensor measurements **305** such as an average value over time, high and low values, etc. Sensor measurement **305** could be either raw or processed data collected by a sensor **101***f*. As illustrated in FIG. **4**, module **101** could also include a server instruction **414**, which could be a command for server **105** such as an update, query, or notification. A server instruction **414** could also be used by module **101** as input into step **402** below, where the server instruction **414** can be encrypted.

Module **101** may optionally add a security token **401**, which could also be a random number, or a randomly generated text, binary, or hexadecimal string. Security token **401** could be created using random number generator **128** and included in message **208** in order to make each message **208** unique and thus avoid any replay attacks when message **208** traverses wireless network **102** and IP Network **107** in order to securely reach server **105**. A random number in security token **401** could be processed by module **101** using a seed **128***b* in a random number generator **128**, where the seed utilizes data from sensor **101***f* as input into the seed, as illustrated in FIG. **1***c* above. Security token **401** could alternatively be a non-random number used to make message **208** unique, such as a timestamp with significant digits to milliseconds or microseconds, and other possibilities for security token **401** exist as well. In other words, the use of security token **401** can ensure to a high level of certainty that each message **208** will be different and thus the same data within message **208** would not be sent more than once (other than a short timeframe such as within a few seconds where the same UDP packet for a message **208** could be intentionally sent more than once in order to implement and support forward error correction).

At step **401***a*, if (i) module **101** is sending message **208** to server **105** for the first time, or (ii) expiration time **133** for a previous symmetric key **127** has transpired, then module **101** may preferably include a symmetric key **127** within message **208**, where the symmetric key **127** would be encrypted using an asymmetric ciphering algorithm **141***a* with the module private key **112** at step **402**. In this case of (i) or (ii) in the previous sentence, module **101** can securely send the symmetric key **127** to server **105**, which could then utilize symmetric key **127** in a symmetric ciphering algorithms **141***b* at later steps. As noted in FIG. **1***d*, symmetric key **127** could be derived using cryptographic algorithms **141** and a random number from random number generator **128**. If (a) module **101** has already sent a message **208** to server **105**, or (b) expiration time **133** for a symmetric key **127** has not transpired (and thus symmetric key **127** would remain valid), then module **101** can omit including symmetric key **127** at step **401***a*.

At step **402**, module **101** could utilize the sensor data **305**, security token **401**, server public key **114**, server instruction **414** (not shown) and the cryptographic algorithms **141** to encrypt the sensor data **305** and security token **401**. A step **402** could utilize either a symmetric ciphering algorithm **141***b* with a symmetric key **127** or an asymmetric ciphering algorithm **141***a* with the server public key **114**. Symmetric ciphering **141***b* may be used to encrypt sensor data **305**, and asymmetric ciphering **141***a* may be used to encrypt a symmetric key **127**. The output of step **402** can be module encrypted data **403**. If a symmetric key **127** is included within message **208**, then module **101** preferably utilizes asymmetric ciphering **141***a* with server public key **114** at step **402**. The asymmetric ciphering **141***a* at step **402** may be processed according to RSA algorithms **153**, elliptic curve cryptography (ECC) algorithms **154**, or other asymmetric ciphering algorithms for either public key cryptography or proprietary methods.

Note that if (A) a symmetric key **127** is utilized for symmetric ciphering **141***b* between module **101** and server **105** at step **402**, such utilizing as a symmetric key **127** which could be derived using ECDH **159**, then (B) AES **155**, Triple DES, or other symmetric ciphering algorithms **141***b* can be used at step **402** to generate module encrypted data **403**. If symmetric ciphering **141***b* is utilized in step **402**, exemplary symmetric ciphers AES **155** and Triple DES are depicted and described in connection with FIG. **1***d* above. If symmetric ciphering **141***b* with ECIES is utilized in step **402**, then step **402** could utilize the steps outlined in FIG. **2**, titled "ECIES Encryption Functional Diagram" in "A Survey of the Elliptic Curve Integrated Encryption Scheme" by Martinez et al in the Journal of Computer Science and Engineering, Volume 2, August 2010, page **10**, (herein incorporated by reference). The use of (i) symmetric ciphering algorithms **141***b*, such as with AES **155**, Triple DES, and

similar secure symmetric ciphers, with (ii) symmetric key **127** may be preferred at step **402**, if symmetric key **127** is available.

After processing module encrypted data **403**, module **101** can add or append a module identity **110**. Module identity **110** is illustrated in FIG. **4** as being added after the module **101** processes module encrypted data **403**, although module identity **110** may optionally only be included in module encrypted data **403** if symmetric ciphering **141***b* with cryptographic algorithms **141** and symmetric key **127** is utilized, (i.e. module identity **110** could be included before step **402**, where module identity could be included as an input into step **402** as opposed to being added after step **402**). By including module identity **110**, possibly in the form of an encrypted module identity **110***a*, as external to module encrypted data **403** as illustrated in FIG. **4** at step **404**, server **105** can use the module identity **110** to pre-process or route a message before decrypting module encrypted data **403**. For example, server **105** could utilize a message preprocessor **105***y* and module identity **110** outside of module encrypted data **403** to select a sub-server **105***w*. By including module identity **110**, possibly in the form of an encrypted module identity **110***a*, as external to module encrypted data **403**, server **105** can use the module identity **110** to select either (i) a module public key **111** or (ii) a symmetric key **127** from a database **105***k* in order to decrypt module encrypted data **403** or verify a digital signature. The exemplary message **208** illustrated in FIG. **6** below shows one example of a message **208** where module identity **110** in the form of an encrypted module identity **110***a* is included as external to module encrypted data **403**, which is also illustrated in FIG. **4**.

Module identity **110** in a message **208** can represent the use of multiple unique strings or numbers over time that are uniquely associated with module **101**, such as a first string for module identity **110** as recorded by module **101** and a second string for module identity **110** as recorded by a server **105**. Module identity **110** could also comprise a session identifier, where the session identifier is uniquely associated with module identity **110** for a limited period of time, and a new session identifier is periodically generated by either module **101** or server **105**. Thus, the use of a module identity **110** in a message **208** may comprise a different format or string than the module identity **110** preferably read from hardware, where the module identity **110** read from hardware could be a serial number, Ethernet MAC address, IMEI, etc. However, both can be utilized to uniquely identify a module **101** and thus are referred to herein as a "module identity" **110**.

For cases where module **101** either (i) uses asymmetric ciphering **141***a* in a step **402**, such as sending a symmetric key **127**, or (ii) sends data without symmetric ciphering **141***b* (i.e. sends plaintext) module **101** can generate a module digital signature **405** for the message **208** using the module private key **112**. The module digital signature **405** can be processed according to public key infrastructure (PM) standards such as the National Institute of Standards (MST) "FIPS 186-4: Digital Signature Standard" (which is hereby incorporated herein by reference), or IETF RFC 6979 titled "Deterministic Usage of the Digital Signature Algorithm (DSA) and Elliptic Curve Digital Signature Algorithm (ECDSA)" (which is hereby incorporated herein by reference). The use of a module digital signature **405** can be processed according to the description of a digital signature according to the Wikipedia entry for "Digital Signature" as of Sep. 9, 2013, which is incorporated by reference herein in its entirety. Module digital signature **405** may also comprise a Message Authentication Code (MAC) or tag. Also note that other uses of a digital signature as contemplated within the present invention may refer to the above three references and related standard techniques for processing and creating digital signatures.

Other PM standards or proprietary methods for securely generating a module digital signature **405** may be utilized as well. According to a preferred exemplary embodiment, ECC algorithms for generating module digital signature **405** may be utilized in order to minimize the key length compared to RSA algorithms. Module digital signature **405** may comprise a secure hash signature using a secure hash algorithm **141***c* related to the secure hash algorithm **1** (SHA-1), or subsequent standards such as SHA-2 156 and SHA-3 157, and other possibilities exist as well. Module digital signature **405** is illustrated in FIG. **4** as being processed after module encrypted data **403**, but module digital signature **405** may also optionally be included in module encrypted data **403**. However, since module digital signature **403** can represent a secured hash signature that can contain limited useful information to a potential eavesdropper, module processing resources and energy can be conserved by including module digital signature **405** after and external to module encrypted data **403** (i.e. the benefits of encrypting module digital signature **405** may be limited). Also note that module digital signature **405** and the other secure digital signatures contemplated herein may be calculated with input from either (i) the plaintext in an encrypted message such as module encrypted data **403** or (ii) the ciphered data before conversion to plaintext, such as module encrypted data **403** before decryption at step **413**.

Module **101** can then continue processing message **208** by including channel coding **406**. Channel coding techniques for channel coding **406** could include block codes and convolution codes. Block codes could include Reed-Solomon, Golay, BCH, Hamming, and turbo codes. According to a preferred exemplary embodiment, channel coding **406** can utilize a turbo code, so that server **105** can correct bit errors received by server **105** in message **208**. Alternatively, module **101** could implement channel coding by simply transmitting the same packet more than once and the use of block codes or convolution codes could be bypassed. Or, module **101** could implement channel coding by both transmitting the same packet more than once and also using a block code or convolution code in the body of the packet. The use of channel coding **406** can be preferred, since any bit errors received by server **105** within module encrypted data **403** or module digital signature **405** in message **208** could break a decryption or signature verification algorithm such as cryptographic algorithms **141** used by server **105**. Thus, the use of channel coding **406** (with a transport protocol that supports the transmission of bit errors such as UDP with checksums disabled in IPv4 or UDP Lite) can ensure the decryption of message **208** is robust to bit errors. Bit errors may potentially generated by intermediate network links and nodes as message **208** traverses a wireless network **102** or IP Network **107**. Channel coding **406** may optionally be omitted.

As illustrated in FIG. **4**, module **101** can then format message **208** according to a transport protocol such as UDP within UDP processing **407** to create message **208**. Other options besides the UDP processing illustrated in FIG. **4** are available as well, including TCP formatting, but UDP formatting may be preferred in order to minimize the number of packets transmitted as well as TCP overhead. Note that TCP overhead when using IPv6 can be significant, since the full series of TCP messages to establish a TCP session and

transmit the message **208** may include about 4-6 packets, where each packet in the message includes a TCP header and a full 128 bit address for both the source IP address and the destination IP address. In contrast, UDP may preferably require only a single packet for message **208** and a single packet for response **209**, thus significantly reducing the overhead and conserving either (i) a battery **101***k* life or (ii) energy usage by module **101** by reducing the data transmitted and received by module **101**.

According to a preferred exemplary embodiment, UDP formatting **407** can be formatted according to the UDP Lite protocol (IETF RFC 3828) with IPv6, whereby UDP checksums can be partially disabled and channel coding **406** can be included in the UDP datagram to correct for bit errors. Note that the UDP and UDP Lite protocols may be updated in the future with subsequent standards, but the UDP formatting **407** may preferably continue to include both (i) partially or fully omitted packet checksums within the packet header and (ii) channel coding within the packet body. Also note that if IPv4 is utilized by module **101** and server **105**, regular UDP (i.e. according to RFC 768) formatting may be utilized with channel coding **406** and checksums in the packet header may be disabled.

As illustrated in FIG. **4**, after adding UDP formatting **407**, module **101** may record a fully formatted message **208**. As illustrated in FIG. **2**, message **208** can be sent by module **101** using a physical interface **101***a* such as radio **101***z* and a wireless network **102** and the IP Network **107**. Additional details regarding the structure of message **208** after taking exemplary steps in FIG. **4** are shown in FIG. **6** below. The security and efficiency features of message **208** can be useful for module **101** to efficiently balance potentially competing priorities of conserving battery life/bandwidth utilization/energy while maintaining security.

FIG. **5***a*

FIG. **5***a* a is a flow chart illustrating exemplary steps for a module to process a response from the server, including verifying a server's identity and decrypting instructions, in accordance with exemplary embodiments. Module **101** can perform the steps illustrated in FIG. **5***a* in order to securely and efficiently process a response **209** from server **105**. The steps illustrated in FIG. **5***b* may comprise steps **307***a* and **307***b* illustrated in FIG. **3**. Module **101** can receive response **209** using IP:port **204**, as illustrated in FIG. **2**. Response **209** can be formatted according to the UDP protocol or UDP Lite protocol, although other possibilities exist as well for the transport layer formatting of response **209**, including TCP.

At step **407**, module **101** can process the packet using the appropriate transport layer protocol, such as UDP. In this step **407**, the body of the packet comprising response **209** can be extracted, and a checksum, if any, can be calculated to verify the integrity. An exemplary format of response **209** is depicted and described in connection with FIG. **6** below. Note that if the UDP Lite protocol is utilized, the checksum may optionally only apply to the packet header. At step **406**, module **101** can process and remove channel coding, if channel coding is present in response **209**. Note that if a wireless network **102** comprises a IEEE 802.15.4 network, then UDP Lite may preferably utilized, and UDP Lite may preferably be utilized if wireless network **102** is a PLMN mobile network and the PLMN mobile network supports UDP Lite protocol. Channel coding techniques utilized in step **406** could include block codes and convolution codes, and can use related algorithms as used in channel coding **406** in FIG. **4**. By processing channel coding in step **406**, module **101** can correct potential bit errors received in response **209**. As noted above, the use of channel coding **406** can be preferred, since any bit errors received within server encrypted data **504** in response **209** could break (i) a cryptographic algorithms **141** used by module **101** at subsequent step **514**, and/or (ii) the verification of a server digital signature **506** at step **501***a*.

At step **501**, module **101** can read and record the server identity **206**. Server identity **206** may preferably be a string that is external to server encrypted data **504** within response **209**, as illustrated in FIG. **6** below. The server identity **206** can preferably match a server identity **206** used in message **208**. The server identity **206** could also comprise the source IP address **106** of response **209**, or a domain name resolving to the source IP address **106**, or a domain name associated with IP address **206**. Server identity **206** may also be uniquely associated with an identity in the "Common Name" (CN) field of a certificate **122** for server **105**. Receiving or processing a server identity within a response **206** may optionally be omitted, if module **101** can select the appropriate server public key **114** without first obtaining server identity **206**. At step **501***a*, module **101** can validate and verify the server identity **206** using the server digital signature **506** inserted by server **105** in response **209**. Server digital signature **506** can comprise a secure hash signature, where server **105** generated the hash signature using as input into a digital signature algorithms **141***d* (i) the server private key **105***c* and (ii) at least a portion of the server encrypted data **504**. Module **101** can utilize the server public key **114** recorded in memory to securely validate the server digital signature **504**, also by using digital signature algorithms **141***d*.

The server digital signature **504** can be verified according to public key infrastructure (PM) standards such as the National Institute of Standards (NIST) "FIPS 186-4: Digital Signature Standard", or IETF RFC 6979 titled "Deterministic Usage of the Digital Signature Algorithm (DSA) and Elliptic Curve Digital Signature Algorithm (ECDSA)". Other PM standards or proprietary methods for securely verifying a server digital signature **504** may be utilized as well. Also, server digital signature **506** could optionally be included in server encrypted data **504**, where step **501***a* could take place after step **505**. But, since server digital signature **506** may comprise a secure hash signature, any benefits from ciphering the secure hash may be small while requiring additional processor resources.

Note that if module **101** had previously received server digital signature **506** in a previous response **209**, then steps **501** and **502** may optionally be omitted within a subsequent response **209**. In other words, after module **101** receives a valid server digital signature **504**, server **105** may then transmit a subsequent server digital signature **506** periodically according to rules based upon the security requirements of the application. As one example, if (a) after sending a symmetric key **127** in a message **208** to server **105** and receiving a response **209** to the message **208** with (i) a valid server digital signature **506** and (ii) a server encrypted data **503** using symmetric key **127**, then (b) module **101** can subsequently have reasonable assurance that subsequent responses **209** using symmetric key **127** are also from server **105**. According to a preferred exemplary embodiment, when module **101** sends a new symmetric key **127** using an asymmetric ciphering algorithms **141***b*, the response **209** from server **105** with server encrypted data **504** (where the server encrypted data **504** was created using the new symmetric key **127**) can preferably include or be associated with a server digital signature **506** in either the response **209** or another packet from server **105**.

Although not illustrated in FIG. **5***b*, upon completing step **501***a*, module **101** may also optionally verify the server identity **206** of server **105** using a certificate **122** associated with server **105** and the public key of a certificate authority **118**. Module **101** could request a certificate **122** associated with server **105** and calculate a secure hash signature **123** using cryptographic algorithms **141** and a certificate authority public key **131** (illustrated in FIG. **1***a*). Other possibilities exist as well for module **101** to verify the identity of server **105** without departing from the scope of the present invention. As one alternative, module **101** could utilize Domain Name System Security Extensions (DNSSEC), as specified in multiple IETF RFCs including RFC 4033, 4034, and 4035 to securely resolve server identity **206** into IP address **106**. For example, module **101** could verify that the source IP address within response **209** matches a DNSSEC record for server name **206**.

After verifying server digital signature **506** in step **501***a*, module **101** can record an authenticated server encrypted data **504** from server **105**. Authenticated server encrypted data **504** may comprise an acknowledgement that server **105** received message **208**. Authenticated server encrypted data **504** may be useful if the UDP or UDP Lite protocol is used to send message **208**, since UDP is a connectionless protocol and module **101** may need confirmation that server **105** received message **208**. Note that if steps **501** and **501***a* are omitted, then authenticated server encrypted data **504** may comprise a simple acknowledgement that server **105** received message **208**. Although not illustrated in FIG. **5***a*, if module **101** does not receive response **209** or server encrypted data **504** before a timer expires, such as within an exemplary duration of 2 seconds, then module **101** can resend message **208**.

At step **505**, module **101** can decrypt server encrypted data **504** using either (i) module private key **112** as a decryption key if asymmetric ciphering **141***a* is utilized to process server encrypted data **504**, or (ii) symmetric key **127** if symmetric ciphering **141***b* is utilized to process server encrypted data **504**. Module **101** can utilize cryptographic algorithms **141** and the key in order to decrypt the server encrypted data **504** at step **505**. Module **101** can utilize techniques to decrypt server encrypted data **504** that are described in connection with creating module encrypted data **403** described in FIG. **4** above. If server encrypted data **504** uses an asymmetric ciphering, the cryptographic algorithms **141** used in step **505** may be processed according to RSA algorithms **153**, elliptic curve cryptography (ECC) algorithms **154**, or other algorithms for public key cryptography, as described previously herein. ECC algorithms **154** may be preferred with asymmetric ciphering in order to maintain high security with small key lengths, compared to RSA, in order to minimize the message lengths, radio frequency spectrum utilization, and processing power required by wireless module **101**. If server encrypted data **504** uses symmetric ciphering **141***b*, the cryptographic algorithms **141** can use symmetric key **127** to decrypt server encrypted data **504** at step **505**.

Module **101** and server **105** could utilize a pre-agreed protocol in order to select the use of asymmetric ciphering **141***a* or symmetric ciphering **141***b* in a response **209**. According to an exemplary embodiment, module **101** and server **105** (*i*) utilize asymmetric ciphering **141***a* when transmitting symmetric keys **127** or other keys such as pre-shared secret keys, new private keys, etc., and (ii) utilize symmetric ciphering **141***b* at other times (i.e. when not sending/receiving a key). Since the exemplary response **209** illustrated in FIG. **6** does not contain a symmetric key, module **101** can utilize symmetric ciphering **141***b* in a step **505** with symmetric key **127** to decrypt server encrypted data **504** at step **505**.

Response **209** may include a module instruction **502**. By including module instruction **502** in server encrypted data **504** and response **209**, the module instruction **502** can be read and processed by device **101** at step **507**, after the server encrypted data **504** is decrypted at step **505**. Module **101** can subsequently perform the module instruction **502** in step **507**. Note that server encrypted data **504** may optionally include an acknowledgement that message **208** was received by server **105**. In this manner, an "ACK" response to message **208** can be securely transmitted by server **105** and received by module **101**. Additional details for exemplary module instruction **502** and the processing of a module instruction **502** by module **101** are depicted and described in connection with FIG. 4 of U.S. patent application Ser. No. 14/064,618, filed Oct. 28, 2013 in the name of John Nix, entitled "A Set of Servers for "Machine-to-Machine" Communications using Public Key Infrastructure," which is hereby incorporated by reference in its entirety. Upon completion of the processing of response **209** illustrated in FIG. **5***b*, module **101** can perform functions such entering the sleep or dormant states illustrated at step **308** in FIG. **3***a*, thus conserving battery life (if present in module **101**) or energy while maintaining a secure, robust, and highly scalable system **100**.

FIG. **5***b*

FIG. **5***b* is a flow chart illustrating exemplary steps for a module to communicate with a server, including the module deriving public and private keys, in accordance with exemplary embodiments. In order to utilize communications secured with PM techniques such as, but not limited to, private keys, public keys, certificates, and identities, a module **101** may preferably obtain or generate the keys and utilize a module identity **110** and/or a certificate **122** in a secure manner. Given that a plurality of modules **101** may be deployed in potentially remote places or inconvenient locations for manually changing a SIM card or UICC card, also potentially without frequent contact with end users and/or technicians, the use of secure PM techniques for a module **101** can create a significant set of challenges for the generation of module public key **111** and module private key **112**, as well as properly and securely obtaining a certificate **122** with an module identity **110**. Using conventional technology, significant challenges and costs can be incurred when (i) module **101** has already been deployed, such as collecting data from a monitored unit **119**, and (ii) module **101** needs to utilize a new set of module private key **112** and module public key **111**. The steps depicted and described for a module **101** to securely derive and implement module PM keys may also be used with an eUICC **163** in order to for an eUICC **163** to securely establish a derived module private key **112** and derived module public key **111** within an activated eUICC profile **313**, as depicted in FIG. **3***b* above.

Exemplary embodiments that include derivation or processing of a new module private key **112** and module public key **111** may utilize the particular steps and procedures contemplated herein, in order to minimize any potential human intervention (with related costs) while continuing to maintain or also enhance security, compared either (i) externally generating module private key **112**, and/or (ii) continuing to use the same module private key **112** for the lifetime of module **101**. Over a long period of operating time for a module **101**, such as, but not limited to, several years or longer, there may be many reasons module **101** may need a new pair of PM keys, such as, but not limited to, (i)

expiration of a certificate **122**, or the certificate **122** of a parent signature authority, (ii) the transfer of ownership or control of module **101**, where the prior ownership could have direct or indirect access to the module private key **112**, (iii) supporting a new server **105** that has different security requirements or a different set of cryptographic parameters **126** (longer keys, different ECC curves, different cryptographic algorithms **141**, etc.), (iv) revocation of a public key in a chain of signatures associated with a certificate **122**, (v) in the event of a "factory reset" condition or similar circumstances where a prior key pair previously recorded in a nonvolatile memory may no longer be available, and (vi) the use of a module PM key pair **314** within network credentials **314** for activated eUICC profiles **313**, where (a) the network credentials **314** are used to access a wireless network **102**, and (b) module **101** may prefer to connect with multiple different wireless networks **102** over time using different network credentials **314**. In the case of (ii) above, new ownership of module **101** may require a module **101** to utilize a new module private key **112** since the old ownership may have access to an old module private key **112**. In the case of (iii) above, a new server **105** may require a pair of public/private keys incompatible with a prior set of public/private keys utilized by module **101** and/or a certificate **122** for module **101**.

Other possibilities exist as well for reasons why a module **101** and/or server **105** may prefer for a module **101** to utilize a new module public key **111** and new module private key **112**. In an exemplary embodiment, module **101** may generate a new public/private key periodically in order to enhance the security of a system **100**. A benefit of a system **100** supporting periodic generation of keys by module **101** is that the key length can be shortened in order to obtain a similar level of security, and the processing power and energy consumption, with energy possibly supplied by a battery **105***k*, can be reduced through the use of shorter key lengths. In other words, over time such as, but not limited to, several months or years, the use of a plurality of different pairs of public/private keys for module **101** with shorter key lengths can be both more secure and energy efficient than using a single pair of public/private keys with a longer key length for the lifetime of module **101**. Shorter key lengths may also be more compatible with processing power constraints of a module **101**. Or, a longer key length for public/private keys could also be utilized and periodically rotated for increased security. In exemplary embodiments, module **101** and/or server **105** may prefer for module **101** to periodically generate new public and private keys. In addition, a mobile network operator **108** may prefer for a module **101** with an eUICC to periodically rotate, change, or lengthen a key K for accessing a wireless network **102**, and the periodic generation of a new module PM key pair **315** can support a periodic derivation of a new secret shared network key K **129***d* (as described in FIG. **9***b* and FIG. **11**), which could be used to connect with wireless network **102**.

The general approach adopted by most mobile phone networks over the past two decades has been founded upon the use of a pre-shared secret key (i.e. a "PSK") recorded in subscriber identity module (SIM) or UICC cards, such as the Ki pre-shared secret key in 2G or 3G networks, secret key K in 4G LTE networks, and specified in related standards. The use of a pre-shared secret key recorded in transferred physical media may work or be sufficient for mobile phones, where the SIMs can often be easily replaced, but the use of a pre-shared secret key K or Ki in a SIM or UICC may not be suitable for a module **101** and mobile network operator **108** for many circumstances. As one example, significant costs may be incurred by swapping out a SIM card for already deployed modules **101**, especially if they are in remote locations or continually moving such as, but not limited to, a tracking device on a container, pallet, truck, or automobile. In an exemplary embodiment, a module **101** may preferably record multiple pairs of public/private keys **111**/**112** for various and different functions, such as, but not limited to, connecting to different servers **105**, connecting to different wireless networks **102**, using different module PM key pairs **315** for different network access credentials **315** in different activated eUICC profiles **313**, etc. As contemplated herein, recording more than one public/private key **111**/**112** can comprise module **101** recording a plurality of pairs of module public keys **111** and module private keys **112**. Also as contemplated herein the module private key **112** for a module **101** can be different than a private key in a Diffie-Hellman key exchange, since the module private key **112** can be used to process a module digital signature **405**, where a receiving node for a message with a module digital signature **405** can verify the signature using a module public key **111**. In exemplary embodiments, one pair comprising a first module public key **111** and a first module private key **112** can be identified or selected from a different pair comprising a second module public key **111** and a second module private key **112** using a module public key identity **111***a*.

The number of pairs of public/private keys useful to a module **101** concurrently could be several, such as, but not limited to, an exemplary three or more actively used public/private keys, although other possibilities exist as well. Manually trying to change or add a new SIM card each time a new security key is required may not be efficient or feasible. Or in another exemplary embodiment, the multiple pairs of private and public keys could be used in sequence, such that module **101** with server **105** or wireless network **102** utilizes a single module public key **111** and module private key **112** at any given point in time. In the case where module **101** with a module identity **110** derives or generates more than one module private key **112** and module public key **111** during the lifetime of module **101** and sends the derived module public keys **111** over time to a set of servers **1010** (illustrated in FIG. **10** below) or a wireless network **102**, this case may be considered a module **101** sending a series of module public keys for a module identity **110**. The various PM key pairs in the series may also use either different sets of cryptographic parameters **126** or the same set of cryptographic parameters **126**. A first pair of PKI keys could be associated with a mobile network operator **108** and a second pair of PM keys could be associated with a wireless network **102**. The series of module public keys **111** (with corresponding module private keys **112**) can be processed, generated, calculated, and/or derived by a CPU **101***b* with key pair generation algorithms **141***e* and a random number generator **128**. The random number generator **128** can use input from a sensor **101***f*, a radio **101***z*, a clock **160**, and/or a temporary random seed file **139**.

In exemplary embodiments, module **101** can use a module public key **111** for sending a module encrypted data **403** or receiving a server encrypted data **504** by sending the module public key **111** to a server **105** in order to support (i) the module encrypted data **403** to be decrypted (such as, but not limited to, using a step **413** as depicted and described in connection with FIG. 4 of U.S. patent application Ser. No. 14/064,618, filed Oct. 28, 2013 in the name of John Nix), or (ii) the server encrypted data **504** to be encrypted (such as, but not limited to, using a step **503** as depicted and described in connection with FIG. **5***a* of U.S. patent application Ser.

No. 14/064,618, filed Oct. 28, 2013 in the name of John Nix). In addition, a server **105** can use a module public key **111** for sending a module encrypted data **403** or receiving a server encrypted data **504** by inputting the module public key **111** into a key derivation function **141***f* in order to derive or process a derived shared secret key **129***b*, which could be used with a symmetric key **127**. Other possibilities exist as well for module **101** to use its own module public key **111** with cryptographic algorithms for communicating with a server **105**.

FIG. **5***b* illustrates exemplary steps that can be performed with module **101**, including using a module program **101***i*, for generating, deriving, and/or updating a module public key **111** and module private key **112**. The steps illustrated in FIG. **5***b* include both (i) an "initial" or "startup" case where module **101** has not previously derived keys (or keys not internally derived may not have been loaded), and (ii) a subsequent or "follow on" time where module **101** can generate or derive keys after keys were initially obtained or derived. Note that efficient and secure methods and systems contemplated herein, including in FIG. **5***b*, may also be utilized with a regular consumer mobile phone, or smartphone, as a module **101**. Mobile phones as module **101** can benefit from (i) deriving a module public key **111** and a module private key **112**, (ii) sending module encrypted data **403** in a message **208** using the derived keys, and (iii) receiving a server encrypted data **504** in a response **209** also using the derived keys.

In exemplary embodiments where module **101** comprises a mobile phone, then sensor **101***f* may comprise a microphone and actuator **101***y* may comprise a speaker, and other possibilities exist as well to those of ordinary skill in the art for module **101** to comprise a mobile phone. In addition, a mobile phone as a module **101** could utilize an eUICC **163**, and the derived module public key **111** and module private key **112** could be used for network credentials **314** in an activated eUICC profile **313**. In other words, an embodiment illustrated in FIG. **5***b* contemplates that an eUICC **163** can use a derived module PM key pair **315** as network access credentials **314** in future wireless networks **102** and related standards, such that the mobile operator network **108** does not depend on, or require a pre-shared secret key K for access to the wireless network **102**. Alternatively, and as illustrated in FIG. **9***b* and FIG. **11**, a derived module PM key pair **315** could be used in an eUICC **163** to derive a secret shared network key K **129***d*, which could be used as the primary key for authenticating with a wireless network **102**. The present invention contemplates both embodiments discussed in the previous two sentences, including an eUICC **163** with a first activated eUICC profile **313** where the network access credentials **314** use a module PM key pair **315**, and a second activated eUICC profile **313** where the network access credentials **314** use a derived secret shared network key K **129***d*. The first activated eUICC profile **313** could be used by a module **101** for connecting with a first wireless network **102** (which could comprise a WiMAX network that utilizes a module PM key pair **315** for authentication), and the second eUICC profile **313** could be used by a module **101** for connecting with a second wireless network **102** (which could comprise an LTE Advanced network that utilizes a shared secret key K for authentication).

At step **511**, during manufacturing of module **101**, including manufacturing of sub-components such as, but not limited to, a circuit board, assembly of hardware components illustrated in FIG. **1***c*, etc., a module identity **110** could be written into the hardware, and could comprise a serial number, International Mobile Equipment Identity (IMEI) number, Ethernet MAC address, or a similar persistent identification for a module **101**. An IEMI number may be used with a mobile phone as module **101**, in a preferred embodiment. For security purposes, the module identity **110** may preferably be written into a read-only location or protected location or protected memory or protected address, such as, but not limited to, a readable location on a system bus **101***d*, which could also comprise a ROM **101***c*. Recording and utilizing module identity **110** is also depicted and described in connection with FIG. **1***c*, FIG. **2**, and elsewhere herein. Alternatively, module identity **110** could be recorded in a non-volatile memory such as, but not limited to, a flash memory **101***w*.

At step **512**, module **101** can be distributed to end users and also installed with a monitored unit **119**. If module **101** is a mobile phone, then monitored unit **119** could be a person that carries the mobile phone. Also note that a monitored unit **119** could be omitted, and a module **101** could use the techniques contemplated herein. At step **513**, a shared secret key **510**, parameters **126**, and a server address **207** can be recorded in a nonvolatile memory **101***w*. As depicted in FIG. **5***b* at a step **513**, in an exemplary embodiment a first received eUICC profile **311** could alternatively be recorded in a nonvolatile memory **101***w*, and the first received eUICC profile **311** could include the shared secret key **510**, the set of cryptographic parameters **126**, and the server address **207**. As contemplated herein, for an embodiment that utilizes an eUICC **163** for module **101**, the shared secret key **510** in a received eUICC profile **311** can comprise an initial key K **325** for connecting with a wireless network **102**.

Parameters **126** may comprise settings for a cryptographic algorithms **141** as illustrated in FIG. **1***i* and FIG. **1***d*, including (i) key lengths, (ii) algorithms to utilize for key generation or ciphering, such as, but not limited to, selecting RSA algorithms **153** or ECC algorithms **154**, (iii) a specific secure hash algorithm **141***c* to utilize, such as, but not limited to, SHA-256 or SHA-3, (iv) an expiration date of the module public key **111**, (v) a maximum time value for an expiration time **133** associated with a symmetric key **127**, (vi) a ECC parameters **137** or an ECC standard curve **138** as parameters **126** in FIG. **1***h* of U.S. patent application Ser. No. 14/055,606, filed Oct. 16, 2013 in the name of John Nix, (vii) the specification of or values for a padding scheme for use with a digital signature algorithms **141***d*, and/or similar or related values for using cryptographic algorithms **141***d*. Although not illustrated in FIG. **5***b*, at step **513** a configuration file could also be loaded into non-volatile memory, where the configuration file includes a plurality of fields specifying the operation of module **101**. The shared secret key **510**, parameters **126**, and server address **207** could be included in a configuration file.

Continuing at step **513**, server identity **206** could be utilized in place of or in addition to server address **207**, and in this case module **101** can later perform a DNS or DNSSEC lookup using server identity **206** in order to obtain server address **207** for use in a message **208**, such as the destination address. Shared secret key **510** and server address **207** (or server identity **206**) could also be recorded in a ROM **101***c* at step **513**. Step **513** may also be performed concurrently with step **511** or step **512**. According to an exemplary embodiment, a manufacturer may perform step **513** and in this case step **513** could take place concurrently with step **511**. A manufacturer or distributor could load an initial eUICC profile into an eUICC **163** of module **101**, such as a first received eUICC profile **311** illustrated at step **513** in FIG. **5***b*, and in this case step **513** could take place before step **512**. In another embodiment, a distributor of

module **101** could perform step **513** and in this case step **513** could take place concurrently with step **512**. Alternatively, step **513** may be performed by a technician or end user after manufacturing and distribution and before module **101** begins collecting sensor data with a monitored unit. Other possibilities exist as well for the sequence of steps **511** through **513** illustrated in FIG. **5***b* without departing from the scope of the present invention. In general, the order of steps illustrated in various exemplary flow charts contemplated herein can be changed if the revised order or sequence of steps can obtain the same or equivalent end result for the sequence of steps in the exemplary flow charts.

Note that step **513** may take place multiple times during the lifetime of a module **101**, and in this case (a) the first time step **513** is conducted, step **513** could be conducted concurrent with steps **511** or **512**, and (b) a subsequent time step **513** is conducted, step **513** could be conducted after the receipt of a response **209**, where the response **209** includes either (i) a second shared secret key **510**, server address **207**, and also potentially a new module identity **110** or (ii) a new received eUICC profile **311**. In other words, although not illustrated in FIG. **5***b*, a module **101** could return to step **513** from later steps upon the equivalent of a "factory reset", or similar command where flash memory **101***w* and other nonvolatile memory would be cleared. In an exemplary embodiment where step **513** takes place a second time may potentially be the transfer of ownership or control of module **101**, or a another embodiment where step **513** takes place a second time could be the upload of new firmware that is incompatible with a previous configuration file. In any case, (i) shared secret key **510** can preferably be uniquely associated with module **101** (i.e. any given shared secret key **510** may belong only to an individual module **101**), or (ii) a module **101** could record another received eUICC profile **311** a second time that a step **513** could occur during the lifetime of a module **101**.

Shared secret key **510** may comprise a pre-shared secret key **129***a*, as described in FIG. **1***c*. Shared secret key **510** may be recorded in a received eUICC profile **311** if an eUICC **163** and related profiles are utilized, but the use of an eUICC **163** is not required in some embodiments of the present invention. In an exemplary embodiment, a module **101** could also utilize a eUICC **163** for connection to a wireless network **102**, but a module **101** (*i*) does not need to use any keys associated with the eUICC **163** in order to communicate with a server **105** or set of servers **1010** and (ii) can separately utilize the techniques, module PM keys, and other aspects of various embodiments contemplated herein. In other words, for some embodiments of the present invention contemplated herein, a module **101** can use an eUICC **163** for the purposes of connecting with a wireless network **102** (possibly without deriving a module PM key pair **315** for an activated eUICC profile **313**), but the module **101** can separately and independently use steps illustrated in FIG. **5***b* and other Figures to communicate with a server **105**. If (A), (i) module **101** has already derived a module private key **112** and module public key **111** and (ii) a module **101** is not utilizing an eUICC **163** and related profiles (including times when step **513** is being conducted at a second or additional time as contemplated in the previous paragraph), then (B) shared secret key **510** may comprise (i) a key received in a server encrypted data **504** including possibly a symmetric key **127**, or (ii) a derived shared secret key **129***b*. Derived shared secret key **129***b* could be obtained by server **105** from using a key derivation function **141***f* such as ECDH **159** and module public key **111** and server private key **105***c*, using a module public key **111** that has already been derived or used by module **101** (such as if at least one module private key **112** and module public key **111** had already been used or derived before step **513**).

As contemplated herein in an exemplary embodiment where an eUICC **163** is not being utilized by a module **101** for encrypting data with a server **105** (but an eUICC **163** could be used for access to a wireless network **102**), an initial module private key **112***b* and initial module public key **111***b* could be derived outside module **101** and loaded into a nonvolatile memory such as flash memory **101***w* at a prior time before step **513**, and the shared secret key **510** could be received by module **101** using the initial module private key **112***b* and initial module public key **111***b* (such as, but not limited to, receiving the shared secret key **510** in a server encrypted data **504** using the initial module private key **112***b* which had been loaded). Step **513** could then comprise a later time after the server encrypted data **504** has been received that includes the shared secret key **510**, where module **101** may (i) prefer to begin utilizing keys that module **101** internally derives using cryptographic algorithms **141** at a subsequent step **515** or step **316** instead of (ii) continuing to use the initial module public key **111***b* and initial module private key **112***b* that were derived outside of the module **101**, such as, but not limited to, possibly loaded into a nonvolatile memory from an external source. In other words, module **101** could begin operation with PM keys that are initially loaded, but then change to using PM keys derived by module **101**.

In the embodiment where (i) shared secret key **510** has not been received by module **101** in a server encrypted data **504**, and (ii) a module **101** is not utilizing an eUICC **163** for the purposes of communicating with a server **105** (but could use an eUICC **163** for separate purposes of gaining access to a wireless network **102**), shared secret key **510** for a step **513** could be obtained and loaded by a distributor, installer, or end user into a nonvolatile memory such as, but not limited to, flash memory **101***w* in the form of a pre-shared secret key **129***a*, where pre-shared secret key **129***a* was obtained using a module identity **110** and pre-shared secret key code **134** as depicted and described in connection with FIG. **1***e* of U.S. patent application Ser. No. 14/055,606, filed Oct. 16, 2013 in the name of John Nix. Module **101** could also utilize a first pre-shared secret key **129***a*, including a first pre-shared secret key **129***a* entered by potentially a distributor, installer, or end-user described in FIG. **1***e*, to derive shared secret key **510**. Other possibilities exist as well for shared secret key **510** in a step **513**, and shared secret key **510** can be useful for the proper identification and/or authentication of module **101** upon module **101**'s generation of a private key **112** and public key **111**, as described below including step **517**.

If module **101** is a mobile phone, as contemplated herein, shared secret key **510** could be loaded by a distributor or company selling or servicing the mobile phone, or shared secret key **510** in a step **513** could be obtained by the end user or subscriber accessing a web page associated with a mobile operator for a wireless network **102** associated with the mobile phone and/or SIM card. In an exemplary embodiment where module **101** is a mobile phone and an eUICC **163** is being utilized by a module **101**, the shared secret key **510** could be recorded in a received eUICC profile **311**, as illustrated in FIG. **3***b*. In another exemplary embodiment where module **101** is a mobile phone and an eUICC **163** is being utilized by a module **101**, the shared secret key **510** could comprise an initial key K **325** recorded in a set of received MNO network access credentials **312**.

Also note that as contemplated herein, an initial module private key **112***b* and initial module public key **111***b* could be

recorded into nonvolatile memory at step **513**. For example, a manufacturer, distributor, installer, technician, or end-user could load the initial module private key **112***b* and initial module public key **111***b*, where the initial module public key **111***b* would be utilized to authenticate at step **517** below a subsequent set of public/private keys derived by module **101** at step **515** below. In this case, the initial module public key **111***b* and/or initial module private key **112***b* described in the previous two sentences could comprise the shared secret key **510**. In another embodiment, the initial module public key **111***b* and initial module private key **112***b* could be recorded in a SIM or UICC, and the SIM or UICC could be either virtual or physical such as, but not limited to, a SIM card, including a Universal Integrated Circuit Card (UICC) or an embedded UICC (eUICC). A set of servers **1010** (as illustrated in FIG. **10**) could also record the initial module public key **111***b* recorded in the SIM (including an eUICC), and the set of servers **1010** could authenticate a message or a subsequent module public key **111***b* derived by module **101** (such as in a step **515** below) using the initial module public key **111***b*. In other words, for an exemplary embodiment, an eUICC **163** or a profile within an eUICC **163** could record an initial module public key **111***b* and initial module private key **112***b*, and (i) the eUICC **163** could use the initial PM keys for authenticating a subsequent, derived module public key **111**, and (ii) the derived module public key **111** could be recorded within an activated MNO network access credentials **314** associated with an activated eUICC profile **313**.

The use of an initial module public key **111***b* and/or initial module private key **112***b* are also depicted and described in connection with FIG. **5***b* of U.S. patent application Ser. No. 14/055,606, filed Oct. 16, 2013 in the name of John Nix, which is hereby incorporated by reference in its entirety. Thus, FIG. **5***b* also contemplates an embodiment where shared secret key **510** at step **513** comprises an initial public/private key pair for module **101** that is not internally derived by module **101**, including keys derived at step **515**. Note that the contemplation of the use of shared secret key **510** as a pre-shared secret key **129***a* within the present invention may be different than the use of a pre-shared secret key within a subscriber identity module (SIM) card as commonly supported by wireless networks **102** with mobile phones in 2013, one reason being the shared secret key **510** can be used by a server **105** and a module **101** to authenticate a derived module public key **111**, but conventional technology does not contemplate that a pre-shared secret key within a SIM or UICC could be directly read (i.e. moved into a RAM memory **101***e*) by a module **101** in order to authenticate a derived module public key **111**.

At step **514**, module **101** can read module identity **110** using a read-only address. Module **101** can read module identity **110** directly from read-only hardware address by using system bus **101***d*, including from a ROM **101***c*, or module **101** can read module identity **110** from a nonvolatile memory such as a flash memory **101***w*. A step **514** may also be optionally omitted in embodiments where module **101** utilizes an eUICC **163**, and in this case the module **101** can read the network module identity **101***b* from the received eUICC profile **311** acquired in a step **513** above. Step **514** could also take place after step **515** below. At step **515** or a profile activation **316** step, module **101** can derive module private key **112** and a corresponding module public key **111** using (i) random number generator **128**, (ii) cryptographic parameters **126**, (iii) cryptographic algorithms **141**, and/or (iv) a key pair generation algorithm **141***e*. The derived module private key **112** and module public key **111** can comprise a module PM key pair **315**. As contemplated herein, a step **515** could also comprise a profile activation **316** step, such that a received eUICC profile **311** without a module PM key pair **315** can be converted or transformed into an activated eUICC profile **313** with a module PM key pair **315**. Module **101** at step **515** or a step **316** and elsewhere in the present invention can be a mobile phone such as, but not limited to, a smartphone, and the mobile phone could include an eUICC **163**. Module private key **112** and corresponding module public key **111** can be derived using a key pair generation algorithm **141***e* according to a wide range of parameters **126**, and can utilize different algorithms for different pairs of keys, such as, but not limited to, RSA **153** or ECC **154**.

Key derivation at a step **515**, including the use of a profile activation step **316**, could generate keys of various lengths, such as, but not limited to, 2048 bits with RSA **153** or 283 bits with ECC **154**, and other possibilities exist as well. If using ECC **154** to derive a pair of keys for module **101**, step **515** could also accommodate the use of different elliptic curves for compatibility with server **105**, such as, but not limited to, the use of odd-characteristic curves, Koblitz curves. The use of the set of parameters from a step **513** in a step **515** or step **316** can ensure the derived keys by module **101** use a compatible or identical elliptic curve or defined elliptic curve equation as server **105**, etc. In a step **513** or a step **316** in FIG. **5***b*, module **101** can use ECC parameters **137** or an ECC standard curve **138** in a parameters **126** to derive module private key **112** and/or module public key **111**. Note that the use of an eUICC **163** is not required for some embodiments, and a step **515** can be used to derive a module private key **112** and a module public key **112** for the purposes of communicating with a server **105** without using or depending upon an eUICC **163** and related profiles.

Deriving keys in step **515** or a profile activation step **316** could also comprise using values such as constants or variables in a set of cryptographic parameters **126** to define an elliptic curve equation for use with an ECC algorithm **154**. For the embodiment where module **101** derives module PM key pair **315** within an activated network credentials **314**, a profile activation step **316** can utilize the set of cryptographic parameters **126** within a received eUICC profile **311**, and the set of cryptographic parameters **126** could be used with a key pair generation algorithm **141***e* to derive the module PM key pair **315**. The values or constants to define an equation for an elliptic curve could be input into a key pair generation algorithms **141***e* in the form of ECC parameters **137** or an ECC standard curve **138**. In alternative embodiments, an RSA algorithm **153** can be used for deriving module PM keys instead of ECC algorithms **154**. In an exemplary embodiment, where a parameters **126** does not include constants and variables for defining an elliptic curve equation, a key pair generation algorithms **141***e* could use pre-defined elliptic curves with ECC algorithms **154** such as, but not limited to, standardized, named curves in ECC standard curve **138** including exemplary values such as, but not limited to, sect283k1, sect283r1, sect409k1, sect409r1, etc. Exemplary, standardized named curves, as opposed to module **101** and server **105** using an internally generated elliptic curve equation using cryptographic parameters **126**, are also identified as example curves in IETF RFC 5480, titled "Elliptic Curve Cryptography Subject Public Key Information". Thus, module **101** could use either standardized elliptic curves, or a separate defined elliptic curve equation as specified in a set of cryptographic parameters **126**. Or, module **101** could use RSA algorithms **153** with key pair generation algorithms **141***e* such that derived keys for module **101** can be used with RSA algorithms **153** within a

set of cryptographic algorithms **141**. In embodiments where module **101** uses an RSA algorithm **153** to derive a module private key **112** and a module public key **111** in a step **515** or a step **316**, the set of cryptographic parameters **126** can include a modulus for the RSA algorithm **153**.

For embodiments where elliptic curve cryptography is used by a module **101** instead of RSA-based cryptography, the curve for module **101** to utilize in deriving module public key **111** and module private key **112** at step **515** or a profile activation step **316** could be specified in a set of cryptographic parameters **126**. Consequently, the parameters of keys generated by module **101** at step **515** or a profile activation step **316** (including key length or algorithms utilized) may be selected based upon the requirements of the application and can be included in a parameters **126**. When deriving keys at step **515** or a profile activation step **316**, module **101** may also utilize data from sensor **101***f*, radio **101***z*, a bus **101***d*, a physical interface **101***a*, memory **101***e*, and/or a clock **160** in order to generate a seed **128***b* for random number generator **128**, or random number generator **128** could utilize these inputs directly. A random number **128***a* can be input into key pair generation algorithm **141***e* in order to derive the module public key **111** and module private key **112**. Note that with ECC algorithms **154**, a module private key **112** can be a random number **128***a* in one embodiment, and the module public key **111** can be derived with a key pair generation algorithms **141***e* using the module private key **112** comprising the random number **128***a*.

For embodiments where a module **101** uses an eUICC **163**, module **101** could also derive or calculate a key K module token **1103** at a step **316** in FIG. **5***b*, along with the derived module private key **112** and module public key **111**. A key K module token **1103** is depicted and described in connection with FIG. **9***b* and FIG. **11** below. Key k module token **1103** could comprise (i) the module public key **111**, in embodiments where module **101** and server **105** use an ECDH **159** key exchange, or (ii) another value or number for a server **105** to derive a secret shared network key K **129***d* using a network key K derivation algorithm **1101** (in FIG. **11** below). Other possibilities exist as well for a key K module token **1103** calculated by a module **101** in a step **316** in order for a server **105** to utilize the key K module token **1103** in a network key K derivation algorithm **1101** without departing from the scope of the present invention.

Upon key derivation at step **515** or a profile activation step **316**, module private key **112** and module public key **111** can be recorded in a nonvolatile memory **101***w*. For the use of a profile activation step **316** in FIG. **5***b*, the module private key **112** and module public key **111** can also be recorded with a set of activated mobile network operator (MNO) network access credentials **314** for an activated eUICC profile **313**, and the activated eUICC profile **313** could be recorded in a eUICC **163**. The eUICC could also be recorded in a nonvolatile memory **101***w*. Module private key **112** can preferably not be transmitted or sent outside module **101**. Also note that over a potential lifetime of a decade or more of operation of module **101**, each time a new module private key **112** may be required (for various potential reasons outlined above), including multiple instances of a profile activation step **316**, the external recording and/or transferring of module private key **112** incurs a potential security risk. Security risks can be compounded if the external location records private keys **112** for a plurality of modules **101**. Also, by internally generating private key **112** at step **515**, which could comprise a profile activation step **316**, module **101** can overcome significant limitations and costs requiring the distribution of a pre-shared secret key Ki or K in the form of a SIM card or UICC or similar physical distribution of a pre-shared secret key, after module **101** begins operations.

In comparison with conventional technology, the use of a shared secret key **510** in the present invention does not require physical distribution of a new shared secret key **510** after module **101** begins operations such as, but not limited to, sending a module encrypted data **403**, and a shared secret key **510** could be recorded in a received eUICC profile **311** for embodiments that use a eUICC **163**. Module **101**'s key derivation and related steps could also be triggered by either (i) a bootloader program **125**, where the bootloader program **125** determines that memory within module **101** does not contain a module private key **112**, or (ii) via a module instruction **502** such as, but not limited to, a "key generation" or "derive new keys" command in a response **209** from a server, and other possibilities exist as well. Thus, in accordance with a preferred exemplary embodiment, the derivation of a module public key **111** and a module private key **112** at a step **515** in FIG. **5** does not require the use of a profile activation step **316**, and the derivation of the module PM keys does not require and optionally may not be associated with or depend upon the use of an eUICC **163**.

Note that module **101**'s generation of keys after deployment and installation may create challenges for authentication of a new module public key **111** with module identity **110**, since module **101** may be connecting to server **105**, wireless network **102**, or mobile network operator **108** via the IP Network **107** or an open or public network such as a wireless network **102** that may comprise many modules **101** or mobile phones. After module **101** creates new module public key **111** and module private key **112** at step **515** or a profile activation step **316**, at step **516** module **101** can send a message **208** with the module identity **110**, the new module public key **111**, and cryptographic parameters **126** or **126***a*. In an exemplary embodiment where a module **101** uses a profile activation step **316** with an eUICC **163** in FIG. **5***b*, the server **105** receiving the message **208** with the module identity **110** (possibly in the form of a network module identity **110***b*) and new module public key **111** could reside within or be associated with a mobile network **102**. Parameters **126** in message **208** at step **516** can represent the parameters **126** used to generate the module public key **111**.

In exemplary embodiments where an eUICC **163** is being utilized in a FIG. **5***b*, module **101** can send a key K module token **1103** to a mobile network operator **108** in a step **516**. Key K module token **1103** could be calculated in a step **316** above, although other possibilities exist as well for the timing or sequence when a module **101** calculated a key K module token **1103** without departing from the scope of the present invention. The exemplary used of a key K module token **1103** is also depicted and described below in connection with FIG. **11** and FIG. **9***b* below. Key K module token **1103** could comprise (i) the derived module public key **111**, or (ii) another value or number for a server **105** associated with a mobile network operator **108** to derive a secret shared network key K **129***d*. Steps **516** and step **517** illustrated in FIG. **5***b* could be combined into a step **522**, and a step **522** can be utilized by a module **101** in embodiments where an eUICC **163** is utilized and a module **101** performs or conducts the steps illustrated in FIG. **9***b*.

Also, as contemplated herein, a step **516** and a step **517** illustrated in FIG. **5***b* may optionally be combined or the order of a step **516** and a step **517** changed. In an exemplary embodiment, the receipt of data within a step **516** could only be possible if a module **101** using a module identity **110** or **110***b* had previously been authenticated before a step **516**. In

other words, a module **101** and a server **105** could take steps not illustrated in FIG. **5***b* before step **516** to authenticate module **101** before a step **516**, including both nodes using a shared secret key **510**, which could also comprise an initial key K **325**. In this case, where module **101** could be authenticated before a step **516**, the authentication of a message **208** in a step **517** could be considered automatic, since the module **101** could be authenticated before a step **516**. Other possibilities for a module **101** to authoritatively send data in a step **516** are possible as well without departing from the scope of the present invention.

Parameters **126** in message **208** at step **516** may also be optionally omitted, in an embodiment where a server **105** and a module **101** can pre-agree (before a step **516** illustrated in FIG. **5***b*) on the set of cryptographic parameters **126** or **126***a* associated with the module public key **111**. The sub-steps for a server **105** to receive a message **208** are also depicted and described in connection with FIG. **2** above. Parameters **126** within a message **208** can comprise descriptive values for new module public key **111**. Note that at step **516**, server **105** does not need to receive new module public key **111** in the form of a certificate **122** (although it could be in the form of a certificate **122**). New module public key **111** could be received by server **105** within a string or field within a body **602** of a TCP/UDP packet **601***a*, illustrated in FIG. **8** below. As depicted in step **516** shown in FIG. **8** below, message **208** at step **516** can also optionally include a module public key identity **111***a*, which can be recorded in module database **105***k* along with module identity **110** and module public key **111***a*.

According to an exemplary embodiment where an eUICC **163** is not being utilized, a first source (IP:port) number received in a first message **208** at step **516** can be different than a second source IP:port number in a second message **208** at step **518** below, wherein a response **209** send in step **519** below can preferably be sent to the second source IP:port number received in the second message **208** at step **518** in order to traverse a firewall **104** (as depicted and described in connection with packet **209***a* in FIG. **2**). In other words, the proper destination IP:port for a response **209** to a module **101** can change over time, such as the proper destination IP:port changing due to the use of sleep states by module **101** and/or function of a firewall **104**. Consequently, according to an exemplary embodiment, a response **209** can utilize a destination IP:port number equal to the source IP:port number received in the last (i.e. most recent) message **208** from module **101** received by server **105**.

At step **517**, server **105** can authenticate the message **208** received in step **516** using the shared secret key **510** described in a step **513** or profile activation step **316**. Server **105** could record the shared secret key **510** before step **517** in a module database **105***k*. If step **517** occurs for the first time in a lifetime of module **101**, then shared secret key **510** could comprise a pre-shared secret key **129***a* recorded by server **105** in a module database **105***k* illustrated in FIG. **1***a* and FIG. **1***m*. If step **517** occurs at subsequent time, then server **105** could have sent shared secret key **510** in a server encrypted data **504** and recorded shared secret key **510** in a module database **105***k* for later use (such as at step **517**). For the embodiment where a module **101** uses an eUICC and the steps illustrated in FIG. **5***b* to connect with a wireless network **102**, the shared secret key **510** could be recorded in a received eUICC profile **311**, and the shared secret key **510** could comprise an initial key K **325** within the received eUICC profile **313** from a step **513**. For the embodiment where a module **101** uses an eUICC and the steps illustrated in FIG. **5***b* to connect with a wireless network **102**, the shared secret key **510** in a step **517** can comprise an initial key K **325**.

In a step **517**, server **105** can authenticate the message **208** according to message digest, or using the shared secret key **510**, possibly in the form of a initial key K **325**, to process a symmetric key **127** within a symmetric ciphering algorithm **141***b*, where the successful encryption and decryption of data within message **208** using the shared secret key **510** on both ends could be confirmation that message **208** is authenticated, since both parties would only be able to mutually successfully encrypt and decrypt by sharing the same shared secret key **510**. As contemplated herein, the term "authenticating a public key" may refer to "authenticating a message that includes the public key", and both may refer to validating or verifying that a recorded module identity **110**, possibly in the form of a network module identity **110***b*, accessed by server **105** from a module database **105***k* is associated with a receive module public key **111**. In the case where an eUICC **163** is utilized by a module **101** to connect with a wireless network **102**, a network module identity **110***b* may be utilized instead of a module identity **110** (i.e. the server **105** could use a recorded network module identity **110***b* instead of the module identity **110** for authentication of the derived module public key **111**).

Other possibilities exist as well for server **105** to use a shared secret key **510** in order to authenticate a message **208** that contains a new module public key **111** (where module **101** contains a new module private key **112**) or a key K module token **1103**. In one embodiment, message **208** in step **516** could include a module digital signature **405** using secure hash algorithms **141***c*, where both the module **101** and the server **105** input a string combing at least a portion of the shared secret key **510** and a portion of the new module public key **111** into the secure hash algorithms **141***c* in order to obtain the module digital signature **405**. Module **101** could send the module digital signature **405** to server **105** in a message **208**. Additional embodiments for the authentication of a new module public key **111** or a key K module token **1103** for a step **517** is also depicted and described in a step **1202** of FIG. 12 in U.S. patent application Ser. No. 14/064,618, filed Oct. 28, 2013 in the name of John Nix, which is hereby incorporated by reference in its entirety. Thus, the present invention contemplates the authentication and/or verification of either (i) new module public key **111** or key K module token **1103** or (ii) a message **208** that includes new module public key **111** or key K module token **1103** according to steps that use alternatives to a shared secret key **510** for the authentication.

According to some exemplary embodiments, new module public key **111** or key K module token **1103** from a step **515** or profile activation step **316** can be authenticated and/or verified as being properly associated with a recorded module identity **110** in server **105** (*i*) without the use of a shared secret key **510**, and/or (ii) with alternatives to using shared secret key **510**. After receiving authenticated new module public key **111** in steps **516** and **517**, according to a preferred exemplary embodiment, server **105** can preferably only accept and process (A) either incoming (i) a symmetric keys **127** ciphered with a asymmetric ciphering algorithm **141***a*, and/or (ii) incoming server instructions **414**, when (B) the next or a subsequent incoming message **208** from module **101** using module identity **110** also includes a valid module digital signature **405** verified by using the new module public key **111**, received at step **516**.

According to an exemplary embodiment, shared secret key **510** can be associated with a module public key identity

111*a*, and shared secret key **510** can be used to authenticate a particular value for a module public key identity **111***a*. In this embodiment, (i) a message **208** with module public key **111** and a first module public key identity **111***a* may be authenticated using a shared secret key **510**, but (ii) a second message with module public key **111** and a second module public key identity **111***a* may not be authenticated using the same shared secret key **510**. Thus, in accordance with an exemplary embodiment, shared secret key **510** can be used for both (i) a single time for authenticating a module public key **111** or a key K module token **1103** received in a step **516**, and (ii) authenticating a module public key **111** with a particular value for the module public key identity **111***a*. Note that module public key identity **111***a* can be particularly useful with key revocation, such that a key revocation could specify a particular module public key identity **111***a* (associated with a particular module public key **111**) to be revoked, but other module public keys **111** for a module **101** and module identity **110** with different module public key identities **111***a* could remain valid and not revoked.

Although not illustrated in FIG. **5***b*, for embodiments where an eUICC **163** is not utilized to authenticate and encrypt data between module **101** and server **105**, server **105** could operate with a certificate authority **118** in order to utilize a new module public key **111**, as described in this paragraph. In this case, server **105** could bypass the authentication at step **517**, but certificate authority **118** may perform step **517** in order to sign the certificate **122**, including possibly using shared secret key **510** to authenticate module public key **111**. At step **516**, new module public key **111** could be received by server **105** in the form of a uniform resource locator (URL) or domain name for download of a certificate **122** corresponding to the new module public key **111**. Using a certificate authority **118** in conjunction with step **516** is also depicted and described in connection with FIG. **5***b* of U.S. patent application Ser. No. 14/055,606, filed Oct. 16, 2013 in the name of John Nix, which is hereby incorporated by reference in its entirety.

After steps **516** and **517**, which could be combined into a step **522**, server **105** can update a module database **105***k* using the module identity **110** or network module identity **110***b* to insert or update the new module public key **111** or key K module token **1103**, and parameters **126** associated with new module public key **111**. As contemplated herein, a set of servers **1010** (illustrated in FIG. **10** below) could collectively perform the function of a single server **105**, and thus multiple separate computers could comprise a server **105**. Server **105** may communicate with a plurality of modules **101**, and thus could utilize a module database **105***k* in order to record the new module public key **111** or key K module token **1103** and parameters **126** with the module identity **110**. In one embodiment, the module identity **110** could preferably operate as an index within a table of module database **105***k* in order to speed reads and writes from the table used with module public key **111**, parameters **126**, and also selecting a symmetric key **127** for a symmetric ciphering algorithm **141***b* in later messages. As described in FIG. **1***d*, FIG. **1***i*, and elsewhere herein, parameters **126** can include data useful for the operation of cryptographic algorithms **141** and module public key **111**. According to a preferred exemplary embodiment, some modules **101** in a system **100** could utilize a first elliptic curve, such as, but not limited to, using a first set of ECC parameters **137** or first ECC standard curve **138** within a parameters **126**, and other modules **101** could utilize a second and different elliptic curve within a parameters **126**, such as, but not limited to, a second set of ECC parameters **137** or second ECC standard curve **138**. The different sets of parameters **126** for different modules **101** using different module identities **110** could be recorded in the module database **101***k*.

After verifying the new module public key **111** in a step **517**, at step **518** of FIG. **5***b*, module **101** could send a second message **208**, and the second message **208** can include a module identity **110** and module encrypted data **403**. In embodiments where (i) an eUICC **163** is utilized, and (ii) server **105** belongs to a wireless network **102** such as a wireless network operator **108**, then the term "module identity **110**" as contemplated throughout the present invention can comprise a network module identity **110***b*. A module identity **110** comprising an identity associated with hardware for module **101** can be used with an eUICC **163** (since the eUICC may use multiple network module identities **110***b*). Although not illustrated in FIG. **5***b*, the second message **208** could also include a module digital signature **405**, wherein the module digital signature is created with the new module public key **111** received in step **516**. Server **105** could then utilize the steps illustrated in FIG. **4** in order to process the incoming message **208** with the new module public key **111**, including using the module identity **110** sent by a module **101** in the second message **208** at step **518** to select the new module public key **111** and subsequently verify a module digital signature **405** using the new module public key **111** and digital signature algorithm **141***d*. Also as discussed in FIG. **4** in connection with processing a message **208**, module **101** could encrypt the module encrypted data **403** in the second message **208** in a step **518** by using server public key **114**. In one embodiment, the second message **208** as illustrated in FIG. **5***b*, which could be the next message after authenticating module public key **111** in step **517**, could include a symmetric key **127**.

The module encrypted data **403** in step **518** could include a symmetric key **127** for utilization with a symmetric cipher **141***b*, where symmetric key **127** could be ciphered with an asymmetric ciphering algorithm **141***a*. In another embodiment, module **101** could also send sensor data in a module encrypted data **403** at step **518**. Or, at step **518** the second message **208** could be a signal and/or data (such as a random number **128***a*) for server **105** to use a key derivation function **141***f* with the server public key **114** and the new module public key **111** (received at step **516**) to create a new derived shared key **129***b* for use with symmetric ciphering algorithms **141***b* in subsequent messages **208**. In other words, in some embodiments derived shared key **129***b* can function as a symmetric key **127**. If the second message **208** in step **518** comprises a signal and/or data for server **105** to derive a new derived shared key **129***b*, then this second message **208** could then optionally leave off module encrypted data **403** and/or a module digital signature **405**. The successful use of a new derived shared key **129***b* (using the new module public key **111**, possible received in step **516**, and existing server public key **114**) with symmetric ciphering algorithms **141***b* at subsequent steps by both module **101** and server **105** can indicate to each the communications are mutually authenticated. Second message **208** at a step **518** could also include a server instruction **414**, a security token **401**, and/or a timestamp value **604**, and other possibilities exist as well without departing from the scope of the present invention.

At step **519**, module **101** can receive a response **209** from server **105**, where the response **209** includes server encrypted data **504** and a module instruction **502**. Module **101** could take the steps to receive and process response **209** as depicted and described in connection with FIG. **5***a*. Response **209** could be formatted according to the exemplary response **209** illustrated in FIG. **6***a* below. The module

instruction **502** could be an acknowledgement **501** that the second message **208** sent in step **518** was received by server **105**.

In an exemplary embodiment where module **101** utilizes an eUICC **163** to connect with a wireless network **102**, module **101** could use a step **519** to receive second, received eUICC profile **311** at a step **519**. The second, received eUICC profile **311** could be included within the server encrypted data **504**, but the second, received eUICC profile **311** may also optionally comprise a file or set of files that are encrypted and in this case the encrypted, second, received eUICC profile **311** in a step **519** could optionally be received in a response **209** without a server encrypted data **504** (i.e. the server **105** may optionally not add additional encryption from a FIG. **5***a* to the profile **311** if the profile **311** is already encrypted). The new, received eUICC profile **311** received by a module **101** in a step **519** could provide information, such as, but not limited to, a set of network parameters **310** and a set of network access credentials **312** for connecting with a second, different wireless network **102** than the wireless network **102** utilized to receive the response **209** at a step **519**. The profile **311** received in a step **519** could comprise receiving several sets of related data (possibly in different but related responses **209**), such as a first set that includes network access credentials **312** and a second set of data that includes network parameters **310** or cryptographic parameters **126**. Module **101** could use the second, received eUICC profile **311** in order to change network access credentials **314** and connect with a different wireless network **102** (or possibly change network access credentials **314** for connecting with the same wireless network **102**).

In this embodiment where a module **101** uses an eUICC **163**, module **101** could receive the profile **311** from an eUICC subscription manager **164** at a step **519**, where the eUICC subscription manager **164** uses a server **105** and sends a response **209** with the profile **311** to the module **101** in a step **519**. The message **208** with the module identity **110** from the previous step **518** could be sent to the server **105** associated with the eUICC subscription manager **164**. The module **101** could send (a) the module identity **110** read from a hardware address such as a protected memory in a step **514** above to (b) the eUICC subscription manager **164** in the previous step **518** in order to receive the profile **311** in a step **519**. Note that (a) the mobile network operator **108** providing connectivity and access to the IP Network **107** in previous steps in FIG. **5***b*, such as, but not limited to, a previous step **518** could comprise (b) the eUICC subscription manager **164** sending the profile **311** received by a module **101** in a step **519**. Or, the eUICC subscription manager **164** receiving the message **208** in a step **518** could be a different entity than MNO **108**, such as module provider **109** (where module provider **109** in FIG. **1***a* is also illustrated as an eUICC subscription manager **164**). Other possibilities exist as well for the location/operator of an eUICC subscription manager **164** receiving the message **208** in a step **518** (in order to send the response **209** with the profile **311**) without departing from the scope of the present invention.

At step **520**, module **101** can send a third message **208** with a confirmation **414** to server **105**. Confirmation **414** can be used to signal proper execution of module instruction **502** from a step **519**, if module instruction **502** comprised an instruction other than an "ACK" or acknowledgement **501**. In the embodiment where a module **101** received a second, received eUICC profile **311** at step **519**, the step **520** could comprise a signal from module **101** back to server **105** that the received eUICC profile **311** has been properly received, passes integrity checks, and/or is compatible with module **101**, etc. In an embodiment where module instruction **502** in step **519** comprises an acknowledgement **501** from server **105**, then the confirmation **414** may omitted and in this case step **520** could be skipped.

At step **521** server **105** can determine or evaluate if (i) a new module public key **111** and/or certificate **122** are required for continued operation, or (ii) the use of the second, received eUICC profile **311** from a step **519** is preferred for connecting to a second wireless network **102**. One reason for the need of new keys could be the expiration of a certificate **122** for module **101**, or the desire to utilize a different set of cryptographic parameters **126** such as, but not limited to, a longer key length for increase security or the use of a different ECC parameters **137** or a different ECC standard curve **138** with cryptographic algorithms **141**. As described elsewhere herein and above in this FIG. **5***b*, many other possibilities exist for reasons why module **101** and/or server **105** can prefer for module **101** to utilize a new module public key **111** and new module private key **112**. Either server **105** or module **101** may determine that the use of a new module public key **111** and new module private key **112** may be preferred at step **521**. If module **101** determines that the use of a new module public key **111** and new module private key **112** is preferred or desirable, module **101** could send server **105** a signal that new keys will be generated either before step **521** or at step **521**.

Upon determining at step **521** either (i) new keys are desirable or (ii) the use of the second, received eUICC profile **311** is preferred, then module **101** could derive new private and public keys by returning to step **515** or step **316**, as illustrated in FIG. **5***b*. In the embodiment where an eUICC **163** is used, as described above, a module **101** could activate the second, received eUICC profile **311** upon returning to a step **316** and derive a second module PM key pair **315** for the second, received eUICC profile **311**. The second module PM key pair **315** can be different than the first module PM key pair **315** associated with the first received eUICC profile **311** from a step **513**. Although not illustrated in FIG. **5***b*, upon determining "yes" at step **521**, server **105** could send a module instruction **502** of "new key generation" and also a new or current set of cryptographic parameters **126** to utilize with the new module private key **112** and module public key **111**. In accordance with exemplary embodiments, module instruction **502**, including the "new key generation" instruction and set of parameters **126**, can be received in a response **209** after module **101** wakes from a sleep or dormant state and sends a message **208** after waking from the sleep or dormant state. If module **101** determines that new keys are not required or desirable at step **521** (including the use of the second received eUICC profile **311** from a step **519** is not required at one instance of a step **521** but the use of a received eUICC profile **311** could be preferred at a subsequent instance of a step **521**), module **101** can then proceed to step **309** and wait according to a sleep or idle timer before sending the next message **208** to a server **105**.

Although not illustrated in FIG. **5***b*, in embodiments where module **101** uses an eUICC **163** and receives an eUICC profile **311** in a step **519**, upon determining the value "yes" at a step **521**, module **101** could proceed to a step **905** depicted and described in connection with FIG. **9***b* and follow the subsequent set of steps using the received eUICC profile **311** from a step **519**. In the embodiment where an eUICC **163** is utilized by module **101** for connecting to a wireless network **102**, upon determining the value "no" at a step **521**, a step **309** in FIG. **5***b* could comprise the module **101** waiting to send a periodic "location update" request in

order to signal to a wireless network **102** that module **101** continues to be attached in an idle state. In other exemplary embodiments, a module **101** could use a regular SIM or UICC in order to connect with wireless network **102**, and module **101** could use the steps illustrated in FIG. **5***b* to connect with a server **105** without an eUICC **163**.

FIG. **6**

FIG. **6** is a simplified message flow diagram illustrating an exemplary message sent by a module, and an exemplary response received by the module, in accordance with exemplary embodiments. FIG. **6** illustrates exemplary details within message **208** sent by module **101** and also response **209** received by module **101**. Message **208** may comprise a TCP/UDP packet **601***a* sent from module **101** source IP:port **204** to server **105** destination IP:port **207**. According to an exemplary embodiment, UDP or UDP Lite formatting for TCP/UDP packet **601***a* may be preferred. Source IP:port **204** and destination IP:port **207** in message **208** may be included within a header in TCP/UDP packet **601***a*. Although a single message **208**, response **209**, module **101**, and server **105** are shown in FIG. **6***a*, system **100** as illustrated in FIG. **2** and other systems depicted herein may comprise a plurality of each of the nodes and datagrams illustrated in FIG. **6**. As contemplated herein, the term "datagram" may also refer to a "packet", such that referring to as datagram **601***a* can be equivalent to referring to packet **601***a*. Note that when using TCP protocol, a packet within a series of TCP messages can also be a datagram **601***a*.

TCP/UDP packet **601***a* may include a body **602**, which can represent the data payload of TCP/UDP packet **601***a*. The data payload of message **208** can optionally include channel coding **406** as described in FIG. **4** above, if the transport protocol for TCP/UDP packet **601***a* supports the transmission of bit errors in the body **602** (as opposed to entirely dropping the packet), such as, but not limited to, with the UDP Lite protocol. Support for the transmission of bit errors in body **602** by wireless network **102** would be preferred over entirely discarding a packet, since the programs or algorithms used by a module controller **105***x* could include support for and utilization of channel coding **406**. Without UDP Lite formatting, message **208** can alternatively sent by module **101** as a UDP datagram, such as if wireless network **102** (or a wired connection) does not support the UDP Lite protocol.

Note that if (A) message **208** comprises (i) regular UDP or TCP formatting (i.e. not UDP Lite or similar variations) within an IPv6 network, or (ii) a UDP or TCP format within an IPv4 network with a checksum **603** enabled (i.e. checksum **603** not equal to zero), then (B) channel coding **406** may optionally be omitted. Checksum **603** can comprise a value to for an integrity check of a packet **601***a*, and the calculation and use of checksum **603** is defined in IETF standards for TCP and UDP packets. In accordance with an exemplary embodiment, including the use of IPv6 for IP Network **107** and a UDP datagram for message **208** and response **209**, a checksum **603** sent by module **101** in a message **208** does not equal a checksum **603** in the message **208** received by server **105**, in the case where firewall **104** is present and the firewall **104** performs network address translation.

The body **602** can include a module identity **110**, module encrypted data **403**, and channel coding **406**. The module identity **110** in FIG. **6** is illustrated as an encrypted module identity **110***a*, and the encrypted module identity **110***a* could be processed using a ciphering algorithm within a set of cryptographic algorithms **141** to convert the module identity **110** into an encrypted module identity **110***a*. Although not illustrated in FIG. **6**, body **602** could also include a module digital signature **405**, as illustrated in FIG. **6** of U.S. patent application Ser. No. 14/039,401. Module identity **110** in the form of an encrypted module identity **110***a* is illustrated in FIG. **6** as external to module encrypted data **403**, although module identity **110** may optionally only be included in module encrypted data **403**, and in this case module identity **110** would not be external to module encrypted data **403** in a body **602**. By including module identity **110** as external to module encrypted data **403**, server **105** can use the unencrypted module identity **110** in order to select either (i) the appropriate module public key **111** to verify module digital signature **405** if an asymmetric cipher **141***a* is used within cryptographic algorithms **141**, or (ii) the appropriate symmetric key **127** for a set of cryptographic algorithms **141** to decrypt the module encrypted data **403**. Module public key **111** and symmetric key **127** may preferably be recorded in a module database **105***k*, such that server **105** can access a plurality of public keys **111** or symmetric keys **127** associated with different module identities **110** with different bodies **602** for a plurality of modules **101**, which is also illustrated in FIG. **1***m*.

Thus, by including module identity **110** external to module encrypted data **403**, server **105** can utilize the module identity **110** to query a module database **105***k* and select the appropriate module public key **111** or symmetric key **127**. As noted previously, module identity **110** could comprise a string or number that is uniquely associated with module identity **110**, such as, but not limited to, a session identity, as opposed to being a module identity **110** that is read from hardware in module **101** such as, but not limited to, an IMEI number, Ethernet MAC address, etc. Module identity **110** is illustrated in FIG. **6** as a session identity that is a different representation of module identity **110** of a serial number such as in FIG. **2**, but in both cases the values can comprise a module identity **110** since the values can be uniquely associated with module **101** at different points in time.

According to an exemplary embodiment where asymmetric ciphering **141***a* of module encrypted data **403** is utilized, such as (i) the first message **208** sent by module **101** and (ii) where a symmetric key **127** had not been previously exchanged, module identity **110** can be (a) within module encrypted data and (b) not external to module encrypted data **403**. In this case, server **105** can utilize server private key **105***c* to, in sequence, decrypt module encrypted data **403**, extract module identity **110** from the decrypted module encrypted data **403**, and then used the module identity **110** to select module public key **111** from module database **105***k* in order to verify a module digital signature **405**. In a related embodiment, if a module identity **110** is in body **602** and external to module encrypted data **403**, then module identity **110** could be obfuscated or otherwise ciphered according to a pre-agreed algorithm with server **105**, such that server **105** can utilize the obfuscated or ciphered module identity **110** to select a module public key **111** from module database **105***k*. The value of "[Encrypted Module Identity]" shown in FIG. **6** could comprise an encrypted module identity **110***a*, and the algorithm token **190** in the form of a random number **128***a* could be used with a secret ciphering algorithm **141***h* illustrated in FIG. **1***g* to convert a module identity **110** to an encrypted module identity **110***a* and also to convert an encrypted module identity **110***a* to a module identity **110**. The use of an algorithm token **190** in a message **208** illustrated in FIG. **6** can be optionally omitted in exemplary embodiments. According to an exemplary embodiment where (i) symmetric ciphering **141***b* of module encrypted data **403** is utilized, such as after a first message **208** had already been sent by module **101** and a symmetric key **127**

had previously been exchanged, then (ii) module identity **110** can be external to module encrypted data **403** and in body **602** in order for server **105** to utilize module identity **110** and select symmetric key **127** from a module database **105***k*, thereby enabling server **105** to decrypt the module encrypted data **403** using the selected symmetric key **127** and a symmetric ciphering algorithm **141***b*.

In exemplary embodiments, a module digital signature **405** may optionally be omitted from body **602** after module **101** has previously sent symmetric key **127** in a previous message **208** to the message **208** illustrated in FIG. **6**. In other words, in a series of messages **208**, module **101** can preferably change from (i) using asymmetric ciphering **141***a* with in a previous message **208** that includes symmetric key **127** in a module encrypted data **403** (where the initial message **208** also includes module digital signature **405** and module identity **110**) to (ii) using symmetric ciphering **141***b* with subsequent messages **208** without module digital signature **405** in the series (where the subsequent messages **208** can optionally include an encrypted module identity **110***a* external to module encrypted data **403** for server **105** to select the appropriate symmetric key **127**). Message **208** illustrated in FIG. **6** can comprise a subsequent message **208** as described in the previous sentence. A series of messages **208** could begin when the initial message **208** is sent by module **101** and end when expiration time **133** of symmetric key **127** has transpired, and subsequently a new series of messages **208** could begin where the first message **208** in the new series of messages changes back to asymmetric ciphering **141***a* with initial message **208** that includes symmetric key **127** in a module encrypted data **403** (where the initial message **208** also includes a new module digital signature **405**). An example of the initial message **208** described in this paragraph can comprise message **208** illustrated in FIG. 6 of U.S. patent application Ser. No. 14/039,401, filed Sep. 27, 2013 in the name of John Nix, which is hereby incorporated by reference in its entirety. Other possibilities exist as well without departing from the scope of the present invention.

Using a message **208** with a module digital signature **405** can be both more efficient and overall more secure than digest authentication (such as the digest authentication described in IETF RFC 2069), although using digest-based authentication may be alternatively used. The use of a module digital signature **405** requires only a single packet for message **208** and a single packet for response **209** for secure communication between module **101** and server **105**. Module encrypted data **403** illustrated in FIG. **6** can be processed using the steps and algorithms described in FIG. **4**. Note that module encrypted data **403** as illustrated in FIG. **6** is shown in a plaintext form for ease of illustration, but actual module encrypted data **403** within body **602** of a packet **601***a* could be transmitted as binary, hexadecimal, Base64 binary-to-text encoding, or other encoding rules, and strings of the actual data within module encrypted data **403** would not normally be human readable.

In an exemplary embodiment, encryption by module **101** may optionally be omitted, and the server instruction **414** with corresponding data could be included within a message **208** without encryption within the body **602**, such as if security could be maintained at the network level. As one example for this embodiment without encryption, server instruction **414** could be included in body **602** as plaintext. The encryption and/or security could be applied through other means, such as, but not limited to, the use of symmetric ciphering **141***b* such as AES **155** at the data-link layer, where packets transmitted through a wireless network **102** could be encrypted at the data-link layer, but after conversion to a network-layer message such as the exemplary datagram **601***a* illustrated in FIG. **6**, the datagram **601***a* could optionally omit encryption such as a module encrypted data **403**.

Module encrypted data **403** can include a server instruction **414**, a server identity **206**, a module identity **110**, a security token **401**, a timestamp **604**, and a sensor measurement **305**. The server instruction **414** can represent the purpose of the message **208** for server **105**, and FIG. **6** illustrates an "update" for server instruction **414**. An update for server instruction **414** could be used to periodically notify server **105** of regular, periodic sensor measurements **305** acquired by a sensor **101***f* or also data from a plurality of sensors. An update for server instruction **414** may also comprise a periodic report regarding monitored unit **119**, and a server instruction **414** is described in FIG. **4**. Other server instructions **414** besides an "update" may be included in a module encrypted data **403** within a body **602**. The "update" illustrated in message **208** in FIG. **6** can also include a new symmetric key **127**, and the module encrypted data **403** illustrated in FIG. **6** may comprise the use of either an asymmetric ciphering **141***a* with public/private keys, or (ii) symmetric ciphering **141***b* with a symmetric key **127**.

An initial transmission or negotiation of a symmetric key **127** may preferably utilize asymmetric ciphering **141***a* and the use of a public key as an encryption key and a private key as a decryption key. Subsequent transmission of a new symmetric key **127** may utilize either (i) a symmetric cipher **141***b* with a previously negotiated but still valid symmetric key **127** (i.e. expiration time **133** has not transpired), or (ii) asymmetric ciphering **141***a*. If the data within instruction **414** is longer than the maximum data length supported by a selected asymmetric ciphering algorithm **141***a* and the public/private key pair, then module encrypted data **403** within message **208** can be broken up into several sections, such that the data within each section is less than the maximum data length supported by the asymmetric ciphering algorithm **141***a* and key length. In an exemplary embodiment, a first symmetric key **127** can be used with module encrypted data **403** and a second symmetric key **127** can be used with server encrypted data **504**. The first symmetric key **127** and second symmetric key **127** can be different, including using a first symmetric ciphering algorithm **141***b* with the first symmetric key and a second symmetric ciphering algorithm **141***b* with the second symmetric key **127**. In another exemplary embodiment, in order to reduce the number of messages required to be transmitted and thus save power usage by a module **101**, symmetric key **127** used with module encrypted data **403** and server encrypted data **504** can be the same and rotated periodically such, but not limited to, when expiration time **133** for a symmetric key **127** transpires.

Module identity **110** within module encrypted data **403** can represent the identity of module **110**, and could represent a serial number read by module **101** from a read-only hardware address. Module identity **110** is described in FIG. **1***c* and can represent a unique identifier of module **101**. Module identity **110**, such as an encrypted module identity **110***a*, outside module encrypted data **403** can represent a string or number that is different than a serial number that can be used by module **101** within a module encrypted data **403**. Security token **401** within module encrypted data **403** can represent a random string in order to make message **208** reasonably unique and thus system **100** in FIG. **2** and other systems illustrated herein robust against replay attacks. Security token **401** is described in FIG. **5***a*. Timestamp **604** can represent a time value that module **101** sends message **208** or a time value that module **101** acquired sensor data **305**. Sensor data **305** is described with the description of a

sensor **101***f* in FIG. **1***c*, and sensor data **305** can represent data module **101** acquires using sensor **101***f*. Sensor data **305** within message **208** may be stored by server **105** in a module database **105***k*, or potentially forwarded to another server such as, but not limited to, a module provider **109** for additional processing. Sensor data **305** can comprise a wide range of values for a sensor **101***f* besides the exemplary value of a temperature reading shown in FIG. **6**, including raw sensor data, compressed sensor data, and processed or averaged data. The specific sensor data **305** shown in FIG. **6** is illustrated to be exemplary and not limiting for sending and receiving sensor data. Sensor data **305** may also be referred to as a sensor measurement **305**.

FIG. **6** also illustrates exemplary details within response **209** sent by server **105**. Response **209** may comprise a TCP/UDP packet **601***b* sent from server **105** IP:port **207** the IP address **210** and port number **605**, where IP address **210** represents the external IP address of wireless network firewall **104**, if present, and port number **605** is the source port in message **208** as received by server **105** (i.e. the source port in message **208** after traversing the firewall **104** illustrated in FIG. **6***a*). Thus, IP:port with IP address **210** and port number **605** in response **209** may be different than IP:port **204** in message **208**, since the presence of a wireless network firewall **104** may perform NAT routing, which could change the source IP address and source port number from IP:port **204** to IP address **210** and port number **605** in message **208**, as received by server **105**. The use of wireless network firewall **104** in wireless network **102** may require that response **209** be sent from IP:port **207** to IP address **210** and port number **605** in order to be properly processed by firewall **104** and forwarded to module **101** at IP:port **204**. Source IP:port **207** and destination IP address **210** and port number **605** in response **209** may be included within a header in TCP/UDP packet **601***b*, as illustrated in FIG. **6**. TCP/UDP packet **601***b* could comprise a regular UDP packet, a UDP Lite packet, or a TCP datagram, or similar protocols supported by an IP Network **107**. TCP/UDP packets **601***a* and **601***b* may utilize the same protocol.

As noted previously, the use of checksums may be mandatory in IPv6 networks, and thus a response **209** comprising a packet **601***b* can include a checksum value **603** (illustrated in message **208** but not response **209**) for the header. The use of firewalls such as firewall **104** can change the header values in a packet **601***b*. In accordance with a preferred exemplary embodiment, a first checksum value **603** within a response **209** sent by server **105** can be different and/or not equal to a second checksum value **603** within the response **209** received by module **101**. Likewise, in an exemplary embodiment, a first checksum value **603** within a message **208** sent by a module **101** can be different and/or not equal to a second checksum value **603** within the message **208** received by server **105**, potentially due to the presence of a firewall **104** or other router that performs network address translation, where the destination IP address within a response **209** sent by a server **105** is different than the IP address **204** of a module **101**.

A UDP, TCP, or UDP Lite datagram as a TCP/UDP packet **601***b* within response **209** may include a body **606**. Body **606** may comprise the payload or data within a UDP, TCP, or UDP Lite packet. Body **606** can include a server identity **206**, a server digital signature **506** (not shown in FIG. **6**), server encrypted data **504**, and channel coding **406**. Server identity **206** is illustrated in FIG. **6** as external to server encrypted data **504** within body **606**, but server identity **206** may optionally be included in server encrypted data **504** instead. Module **101** may communicate with a plurality of servers **105**, and server identity **206** as external to server encrypted data **504** can allow module **101** to select the appropriate symmetric key **127** to utilize for decrypting server encrypted data **504** (since each of the multiple servers **105** that module **101** communicates with may utilize a different symmetric key **127**).

Also note that the server identity **206** can be similar to module identity **110**, such that multiple different values for server identity **206** could be utilized in different systems illustrated herein, but each of the different values could preferably be uniquely associated with a server **105**. As one example, server identity **206**, outside server encrypted data **504** as illustrated in FIG. **6**, may comprise a session identity or session identifier, as opposed to a different server identity **206** that could comprise a hardware serial number or domain name for server **105**. Thus, server identity **206** outside a server encrypted data **504** may be a different string or representation than server identity **206** within server encrypted data **504**, but both strings/numbers used for server identity **206** in response **209** could be associated with server **105**. In an exemplary embodiment, a set of servers **105***n* can collectively use a server identity **206**.

Although not illustrated in FIG. **6**, a server digital signature **506** in body **606** can comprise a secure hash signature of a subset of body **606**, where the subset of body **606** can comprise server encrypted data **504**, and/or server identity **206** as illustrated in FIG. **6**. The use of a server digital signature **506** in a body **606** is illustrated in FIG. 6 of U.S. patent application Ser. No. 14/039,401, filed Sep. 27, 2013 in the name of John Nix, which is hereby incorporated by reference in its entirety. In this manner, module **101** can utilize server digital signature **506** to authenticate that response **209** was sent by server **105**. Channel coding **406** in body **606** is also depicted and described in connection with FIG. **5** above. The server digital signature **506** may optionally be omitted as well.

Body **606** may include server encrypted data **504**. Server encrypted data **504** is depicted and described in connection with FIG. **5***a* above. Server encrypted data **504** may include an acknowledgement **501**, wherein acknowledgement **501** can notify module **101** that message **208** has been received by server **105**. As illustrated in FIG. **6**, server encrypted data **504** may optionally also include a module instruction **502** for module **101**. The module instruction **502** could be a string that contains instructions or configuration parameters for module **101**, such as an order to change state, parameters regarding the monitoring of monitored unit **119**, server names or addresses, radio frequency parameters, timer values, settings for actuator **101***y*, etc. A module instruction **502** is depicted and described in connection with FIG. **5***a* above. The exemplary module instruction **502** illustrated in FIG. **6** comprises a "key generation" **608** instruction for module **101** derive a new set of keys, also depicted and described in connection with FIG. **5***b* above at a step **515** or step **316**.

In an embodiment where module **101** uses an eUICC **163**, server encrypted data **504** could include a received eUICC profile **311**. An example of a server **105** sending a server encrypted data **504** with a received eUICC profile **311** is depicted and described in connection with step **519** of FIG. **5***b*. In an exemplary embodiment, the server **105** sending the received eUICC profile **311** can be different than a server **105** receiving sensor data **305**. In these embodiments where the server **105** sending the received eUICC profile **311** is different than the server **105** receiving sensor data **305**, module **101** can send the server **105** (possibly associated with or operated by an eUICC subscription manager **164**) a message **208** before receiving the response **209** with the

server encrypted data **504** containing the received eUICC profile **311**. The message **208** to the server **105** operated by an eUICC subscription manager **164** could include a module digital signature **405** processed by a module **101** using the derived module private key **112** in a module PM key pair **315**. In this manner, the server **105** associated with the eUICC subscription manager **164** can verify the message **208** is sent by the correct and/or authenticated module **101** before sending the received eUICC profile **311** in a response **209**. Note that a received eUICC profile **311** may be encrypted with a either (i) a symmetric ciphering algorithm **141***b* or an asymmetric ciphering algorithm **141***a* before encapsulation in a message **208**, and in this case the server encrypted data **504** for receiving the received eUICC profile **311** may optionally be omitted. In other words, the received eUICC profile **311** may not need additional encryption by a server **105** for transmission since the received eUICC profile **311** may already be encrypted.

Other possibilities for a module instruction **502** within a response **209** are possible as well without departing from the scope of the present invention. Although not depicted in FIG. **6** or FIG. **2**, if response **209** includes a module instruction **502**, according to an exemplary embodiment, module **101** can preferably send a second message **208** to server **105**, where the second message **208** includes a confirmation that module instruction **502** was successfully executed or implemented by module **101**. This confirmation could be included in a server instruction **414** for server **105** within a second message **208**, and the confirmation could include a timestamp value **604** for when the module instruction **502** was executed. A timestamp value **604** may be useful for tracking time of actions and data collected, when a module **101** may only periodically have access to a network **102** and also may periodically be dormant or sleep.

Also, although a server encrypted data **504** may be included within a body **606** in exemplary embodiments, body **606** may optionally omit server encrypted data **504** and include data from server **105** or a set of servers **1010** (illustrated in FIG. **10**) that is not encrypted, such as, but not limited to, plaintext. As one example in this case, acknowledgement **501** could be included in body **606** as plaintext. Also, although not illustrated in FIG. **6**, server encrypted data **504** could include a symmetric key **127** for module **101** to utilize with symmetric ciphering **141***b* in cryptographic algorithms **141** for processing a module encrypted data **403** in subsequent messages **208** and/or responses **209**. Server encrypted data **504** in a response **209** may include a security token **401**. Security token **401** may be a random string and may also be generated by either server **105** or module **101**. If security token **401** is generated by module **101**, then security token **401** may be included in message **208** and also utilized by server **105** in response **209**, as illustrated in FIG. **6**. Other possibilities exist as well without departing from the scope of the present invention.

FIG. **7**

FIG. **7** is a flow chart illustrating exemplary steps for a module to derive a series of public keys and private keys, including sending and authenticating the derived public keys, in accordance with exemplary embodiments. In order to utilize communications secured with PM techniques such as private keys, public keys, certificates, and identities, a module **101** may preferably obtain or generate the keys and certificate in a secure manner. Given that a plurality of modules **101** may be deployed in potentially remote places, without frequent contact with end users or technicians, the use of secure PM techniques for a module **101** can create a significant set of challenges for the generation of module public key **111** and module private key **112**, as well as properly and securely obtaining a certificate **122** with an module identity **110**. Using conventional technology, significant challenges and costs can be incurred when (i) module **101** has already been deployed, such as collecting data from a monitored unit **119**, and (ii) module **101** needs to utilize either (a) a new set of module private key **112** and module public key **111** or (b) a new UICC card. In exemplary embodiments, a module **101** could implement steps within FIG. **7** in order to utilize an eUICC **163** in order to connect with a wireless network **102**. The use of an eUICC **163** for connecting with a wireless network **102** is optional, and the steps illustrated in FIG. **7** can be conducted without the use of an eUICC **163**.

The proper use of a new set of module private key **112** and module public key **111** may utilize the particular steps and procedures contemplated herein, in order to minimize any potential human intervention (with related costs) while continuing to maintain security. Over a long period of operating time for a module **101**, such as a decade or longer, there may be many reasons module **101** may need a new pair of PM keys, such as (i) expiration of a certificate, or the certificate of a parent signature authority, (ii) the transfer of ownership or control of module **101**, where the prior ownership could have direct or indirect access to the module private key **112**, (iii) supporting a new server **105** that has different security requirements or a different set of cryptographic parameters **126** (such as, but not limited to longer keys, different ECC curves, etc.), (iv) revocation of a public key in a chain of signatures **123** within a certificate **122**, and/or (v) the use of a module PM key pair **314** within network credentials **314** for activated eUICC profiles **313**, where (a) the network credentials **314** are used to access a wireless network **102**, and (b) module **101** may prefer to connect with multiple different wireless networks **102** over time using different network credentials **314**. In the case of (ii), new ownership of module **101** may require a module **101** to utilize a new module private key **112**. In the case of (iii) a new server **105** may require a pair of public/private keys incompatible with a prior set of public/private keys utilized by module **101** and/or a certificate **122** for module **101**. For embodiments where module **101** and server **105** derive a new secret shared network key K **129***d*, module **101** may derive a new module private key **112** in order to derive the new secret shared network key K **129***d* for connecting with a different wireless network **102**. Other possibilities exist as well for reasons a module **101** may need to derive a new module public key **111** and new module private key **112**.

The general approach adopted by most mobile phone networks over the past two decades has been founded upon the use of a pre-shared secret key recorded in SIM cards and UICCs, such as the Ki secret key in 2G/3G networks and shared secret key K in 4G LTE networks. That approach may work for mobile phones, where the SIMs can often be easily replaced, but the use of a pre-shared secret key in a SIM may not be suitable for a module **101** and mobile network operator **108**. As one example, significant costs may be incurred by swapping out a SIM card for already deployed modules **101**, especially if they are in remote locations or continually moving such as a tracking device on a container or pallet, or a truck or automobile. Next, a module **101** may preferably record multiple pairs of public/private keys **111**/**112** for various functions, such as connecting to different servers **105**, connecting to different wireless networks **102**, etc. The number of pairs of public/private keys useful to a module **101** concurrently could be many, such as an exem-

plary two or more actively used public/private keys. Trying to change or add a new SIM card each time a new security key is required may not be efficient or feasible. FIG. **7** illustrates exemplary steps that can be performed with module **101**, including using a module program **101***i*, for generating and/or updating a module public key **111** and module private key **112**. The steps illustrated in FIG. **7** include both (i) an "initial" or "startup" case where module **101** has not previously derived keys, and (ii) a subsequent or "follow on" time where module **101** can generate or derive keys after the initial derivation of keys. The steps illustrated for the derivation of new module PM keys in FIG. **7** can also be used for an eUICC **163**.

At step **701**, during manufacturing of module **101**, including manufacturing of sub-components such as a circuit board or assembly of hardware components illustrated in FIG. **1***c*, etc., a module identity **110** could be written into the hardware, and could comprise a serial number, International Mobile Equipment Identity (IMEI) number, Ethernet MAC address, etc. For security purposes, a module identity **110** may preferably be written into a read-only location, such as a readable location on a system bus **101***d*, which could also comprise a ROM **101***c*. The read-only location could also comprise a protected memory or protected address within module **101**. A protected memory could also comprise a memory location within a ROM **101***c*. Recording and utilizing module identity **110** is also depicted and described in connection with FIG. **1***c*, FIG. **2**, and elsewhere herein. Alternatively, module identity **101** could be recorded in a non-volatile memory such as a flash memory **101***w*. For embodiments where a module **101** utilizes an eUICC **163** in order to connect with a wireless network **102**, the module identity **110** as depicted in FIG. **7** can comprise a network module identity **110***b*, and the network module identity **110***b* does not need to be written to a read-only location in module **101**, but rather can be written to a nonvolatile memory such as, but not limited to, a flash memory **101***w*.

At step **702**, module **101** can be distributed to end users and also installed with a monitored unit **119**. At step **703**, parameters **126**, and a server address **207** can be recorded in a nonvolatile memory **101***w*. Parameters **126** may comprise settings or values for a cryptographic algorithms **141** as illustrated in FIG. **1***d* and FIG. **1***i*, including (i) key lengths, (ii) algorithms to utilize for key generation or ciphering, such as the specification of an elliptic curve utilized illustrated as parameters **126** in FIG. **1***i*, (iii) a specific secure hash algorithm **141***c* to utilize, such as SHA-256 or SHA-3, (iv) an expiration date of the public key **111**, and/or (v) a maximum time value for an expiration time **133** associated with symmetric keys **127**, etc. The parameters **126** in a step **703** could comprise either a first set of cryptographic parameters **126** or a first subset of cryptographic parameters **126***a*. Although not illustrated in FIG. **7**, at step **702** a configuration file could also be loaded into non-volatile memory, where the configuration file includes a plurality of fields specifying the operation of module **101**. The parameters **126**, and server address **207** could be included in a configuration file.

Continuing at step **703**, server name **206** could be utilized in place of or in addition to server address **207**, and in this case module **101** can later perform a DNS or DNSSEC lookup using server identity **206** in order to obtain server address **207** for use in a message **208**. Server address **207** (or server identity **206**) could also be recorded in a ROM **101***c* at step **703**. Step **703** may also be performed concurrently with step **701** or step **702**. Note that step **703** may take place multiple times during the lifetime of a module **101**, and in this case (a) the first time step **703** is conducted, step **703** could be conducted concurrent with steps **701** or **702**, and (b) a subsequent time step **703** is conducted, step **703** could be conducted after the receipt of a response **209**, where the response **209** includes a second server address **207**, and also potentially a new module identity **110**. In other words, although not illustrated in FIG. **7**, a module **101** could return to step **703** from later steps upon the equivalent of a "factory reset", or similar command where flash memory **101***w* and other nonvolatile memory would be cleared. One example could potentially be the transfer of ownership of module **101**, or a second example could be the upload of new firmware that is incompatible with a previous configuration file.

Continuing at step **703**, shared secret key **129** may comprise a shared secret key **129***c* or a pre-shared secret key **129***a*. Given that module **101** may not derive a private key until a step **515** illustrated below in FIG. **7**, a derived shared secret key **129***b* may not be available from a key derivation function **141***f* at step **702**. A shared secret key **129***c* could be a value depicted and described in connection with FIG. **1***f*. Shared secret key **129***c* can be calculated or processed using input of (i) a set of component parameters **101***t* and (ii) an algorithm token **190** into a shared secret algorithm **141***g*, where the output of shared secret algorithm **141***g* can be the shared secret key **129***c*. In an exemplary embodiment, shared secret key **129***c* may be calculated and determined by module **101** (*i*) without any prior communication with server **105** and also (ii) before module **101** receives a server public key **114**. Although step **703** in FIG. **7** illustrates module **101** as recording shared secret key **129** in a nonvolatile memory, module **101** could alternatively record shared secret key **129** (in the form of a key **129***c* or **129***a*) and algorithm token **190** in a volatile memory such as RAM **101***e*. For embodiments where the module **101** utilizes an eUICC **163** to connect with a wireless network **102**, the recording of shared secret key **129** and related data in a step **703** can comprise recording a received eUICC profile **311**. The shared secret key **129** can comprise a shared secret key **510** as depicted and described in connection with FIG. **3***b*. In another embodiment, the shared secret key **129** in a step **703** could comprise the initial key K **325** recorded in a received eUICC profile **311**, also depicted and described in connection with FIG. **3***b*. The first set of cryptographic parameters **126** and the server address **207** could also be recorded in the eUICC **163** in the form of a received eUICC profile **311**.

In an exemplary embodiment, shared secret key **129** could be obtained and loaded by a distributor, installer, or end user into a nonvolatile memory such as flash memory **101***w* in the form of a pre-shared secret key **129***a*, where pre-shared secret key **129***a* was obtained using a module identity **110** and pre-shared secret key code **134** as depicted and described in connection with FIG. **1***c* above. Module **101** could also utilize a first pre-shared secret key **129***a*, including a first pre-shared secret key **129***a* entered by potentially a distributor, installer, or end-user discussed in FIG. **1***c*, to derive shared secret key **129**. Other possibilities exist as well for shared secret key **129**, and shared secret key **129** can be useful for either the authentication of module **101** and/or the proper identification of module **101** upon module **101**'s generation of a private key **112** and public key **111**, as described below, including step **705**. For embodiments where the module **101** utilizes an eUICC **163** to connect with a wireless network **102**, an initial, received eUICC profile **311** could be loaded into a nonvolatile memory by a manufacturer, distributor, installer, or end-user, and the data for a step **703** could be recorded in the initial, received eUICC

profile **311**. Or, the module **101** could include both a UICC and an eUICC **163**, and the module **101** could use the physical UICC to initially connect with a first wireless network **102**, and subsequently use a received eUICC profile **311** and the eUICC **163** to connect with a second, subsequent wireless network **102**.

In an exemplary embodiment, an initial module private key **112***b* and initial module public key **111***b* could be recorded into nonvolatile memory at step **703**. For example, a manufacturer, distributor, installer, technician, or end-user could load the initial module private key **112***b* and initial module public key **111***b*, where the initial module public key **111***b* would be utilized to authenticate at step **705** a subsequent set of public/private keys derived by module **101** at step **704**. In this case, the initial module public key **111***b* and/or initial module private key **112***b* described in the previous two sentences could comprise the shared secret key **129**. One reason the initial module private key **112***b* with the initial module public key **111***b* could comprise a shared secret key **129** can be, if the initial module public key **111***b* and initial module private key **112***b* are present, (i) the initial module private key **112***b* and initial module public key **111***b* together have been "shared" in the sense that the initial module private key **112***b* has been located outside module **101** and in possession of an entity such as the manufacturer, distributor, installer, technician, or end-user in order to load the initial module private key (and initial module public key **111***b* is shared with server **105**), (ii) the initial module private key **112***b* and initial module public key **111***b* can be used to authenticate a subsequent message **208** containing a public key internally derived by the module at step **704** below, and (iii) the initial module private key **112***b* would remain "secret" and not publicly shared. Thus, FIG. **7** contemplates an embodiment where shared secret key **129** at step **703** comprises an initial public/private key pair that is not internally derived by module **101**.

Note that the contemplation of the use of shared secret key **129** as a pre-shared secret key **129***a* within the present invention may be different than the use of a pre-shared secret key within a SIM card. Specifically, as depicted and described in connection with FIG. **1***c* and elsewhere herein, the shared secret key **129**, comprising any of (i) a pre-shared secret key **129***a*, (ii) derived from a pre-shared secret key **129***a*, or (iii) a shared secret key **129***c*, may be moved by CPU **101***b* into a volatile memory such as RAM **101***e*, with subsequent access by cryptographic algorithms **141**. In contrast, the pre-shared secret key within a SIM card or UICC for mobile phones is usually designed to prevent movement of the pre-shared secret key within a SIM or UICC into RANI **101***e*.

At step **704**, module **101** can authenticate with a server **105** using the data from a nonvolatile memory recorded in step **703**. In the embodiment where a module **101** uses an eUICC **163** to connect with a wireless network **102**, the server **105** could be operated by a mobile network operator **108** and also could be associated with or reside in wireless network **102**. In an exemplary embodiment, a module **101** can be distributed or installed between steps **703** and steps **704**. In order to perform 2-way authentication at a step **704**, module **101** can read module identity **110** using a read-only address or a protected address. Module **101** can read module identity **110** directly from read-only hardware address by using system bus **101***d*, including from a ROM **101***c*, or module **101** can read module identity **110** from a nonvolatile memory such as a flash memory **101***w*. Thus, the read-only address or protected address could comprise an address accessible on system bus **101***d* that is designated read-only for a period of time.

As contemplated herein, a protected address can comprise an address or a memory location that can be read-only (i) for a period of time and/or (ii) upon an elevated set of privileges not normally used in the operation of a module **101**. The module identity **110** used in a step **704** for authentication could be recorded into a flash memory **101***w* by module **110** after a prior read of module identity **110** from a read-only address or a protected address. In this case (module **101** taking the step described in the previous sentence), reading module identity **110** from the nonvolatile memory at step **704** can also comprise module **101** reading module identity **110** using a read-only address or a protected address. Thus, although module **101** may read module identity **110** from a flash memory **101***w*, if (a) module **101** initially utilized a read-only address to record the module identity **110** into the flash memory **101***w*, then (b) reading module identity **110** from the flash memory **101***w* would comprise using a read-only address to read module identity **110**. Other possibilities exist as well, such as the address that includes module identity **110** in either (i) a nonvolatile memory such as a ROM **101***c* or (ii) an address accessible on system bus **101***d*, could be designated for a period of time as available for a read-only or protected operations.

Note that using a module identity **110** from a read-only address or a protected address within module **101** can be important for the use of an eUICC **163**. The module identity **110**, possibly in the form of a hardware serial number or IMEI, can serve as the basis for an identifier or identity of module **101** with an eUICC subscription manager **164**, since a network module identity **110***b* can change for the same module **101** over time as different received eUICC profiles **311** can be activated with different network module identities **110***b*. In other words, a module **101** can use the module identity **110** in order to receive a received eUICC profile **311** from an eUICC subscription manager **164** instead of, or in addition to, a network module identity **110***b* from the eUICC subscription manager **164** since a network module identity **110***b* can change for a module **101** over time when using an eUICC **163**.

Continuing at step **704**, module **101** can take steps to conduct a 2-way authentication with server **105**. In order for module **101** to authenticate with server **105**, module **101** can send a message **208** with a module identity **110** to the server address **207**, which could belong to a server **105**. In an exemplary embodiment, module identity **110** at a step **704**, or any step where module **101** authenticates or verifies identity with a server **105**, can comprise the form of an encrypted module identity **110***a* using a secret ciphering algorithm **141***h* as depicted and described in connection with FIG. **1***g*. In this case, the message **208** with an encrypted module identity **110***a* would also preferably include the algorithm token **190** used by module **101** to derive the encrypted module identity **110**. The server could extract the plaintext module identity **110** using a secret ciphering algorithm deciphering **162**. Alternatively, the module identity **110** could be sent as plaintext in a step **704**. In order to authenticate module **101** with module identity **110** at step **704**, server **105** can utilize the shared secret key **129** to authenticate module **101** at step **704**, such that after authentication, the contents of message **208** or additional messages **208** from module **101** can be further processed.

For embodiments where the module **101** utilizes an eUICC **163** to connect with a wireless network **102**, the 2-way authentication using shared secret key **129** at a step

704 could comprise module 101 conducting a 2-way authentication with a server 105 associated with a subscription manager 164. The shared secret key 129 and related data in a step 704 could be read from a received eUICC profile 311. The shared secret key 129 can comprise a shared secret key 510 within a received eUICC profile 311. For embodiments where the module 101 utilizes an eUICC 163 to connect with a wireless network 102, the 2-way authentication could be conducted with an initial key K 325 in a step 704 using the standard 2-way authentication for an LTE and related networks where the wireless network 102 sends a RAND and AUTN, and module 101 sends a RES. In this case, the shared secret key 129 could comprise the initial key K 325.

Continuing at step 704, server 105 can authenticate module 101 using the module identity 110 in message 208 and a message digest, such as described in IETF RFC 2617, titled "HTTP Authentication: Basic and Digest Access Authentication". Other reasonably secure authentications techniques using a shared secret key 129 could be utilized without departing from the scope of the present invention. In order to authenticate, module 101 could take steps to demonstrate to server 105 that module 101 holds the same shared secret key 129. Module 101 can properly respond to a challenge/nonce in a message digest authentication by sending a secure hash value calculated using (i) the challenge/nonce and (ii) the shared secret key 129. Or, module 101 could authenticate by generating a module digital signature 405 in message 208 using the shared secret key 129. In addition, module 101 could utilize the shared secret key 129 as a symmetric key 127 to encrypt a module encrypted data 403 with symmetric ciphering 141*b*, and if server 105 could properly decrypt the module encrypted data 403 using the same shared secret key 129 on the server, then server 105 would know the correct module 101 sent the message 208 and thereby would be authenticated. Other possibilities exist as well for a module 101 to authenticate with a server 105 using a shared secret key 129, or a shared secret key 510 or an initial key K 325 in the case where module 101 uses an eUICC 163 to connect with a wireless network 102, without departing from the scope of the present invention.

Continuing at step 704, module 101 can also preferably authenticate server 105 in order to complete a 2-way authentication. Module 101 can take steps to ensure or verify that server 105 with reasonable assurance also holds the shared secret key 129, or a shared secret key 510 or an initial key K 325 in the case where module 101 uses an eUICC 163 to connect with a wireless network 102. Module 101 could authenticate server 105 using message digest, such that module 101 issues a challenge/nonce, and verifying that server 105 properly responds to the challenge/nonce with a correct secure hash value, such as the output from a secure hash algorithms 141*c*. Or, server 105 could authenticate with module 101 by the module receiving a server digital signature 506 in a response 209 using the shared secret key 129. In addition, module 101 could utilize the shared secret key 129 as a symmetric key 127 to decrypt a received server encrypted data 504 with symmetric ciphering 141*b*, and if module 101 could properly decrypt the server encrypted data 504 using the shared secret key 129, then module 101 would know the correct server 105 sent the response 208 and thereby the server 105 would be authenticated. Other possibilities exist as well for a server 105 to authenticate with a module 101 using a shared secret key 129 without departing from the scope of the present invention.

Continuing at step 704, module 101 can receive a set of cryptographic parameters 126, preferably after module 101 completes authentication with server 105 (in order for server 105 to not send the set of cryptographic parameters 126 to 3rd parties). A set of cryptographic parameters 126 received in a step 704 can also comprise a second set of cryptographic parameters 126, where the second set of cryptographic parameters 126 could be different or the same as the first set of cryptographic parameters 126 from a step 703. The second set of cryptographic parameters 126 at a step 704 can comprise a subset of cryptographic parameters 126*a* as depicted and described in connection with FIG. 1*i*. Module 101 could send the set of cryptographic parameters 126 recorded in step 703 to the server 105, and the server 105 could respond with a subset of cryptographic parameters 126*a*. In another embodiment, server 105 could send module 101 the second set of cryptographic parameters 126 at step 704, and module 101 could send a subset of the cryptographic parameters 126*a* to the server. In embodiments where module 101 uses an eUICC 163, receiving the second set of cryptographic parameters 126 at a step 704 could comprise receiving a received eUICC profile 311 that includes the second set of cryptographic parameters 126.

At the conclusion of step 704 the module 101 and server 105 can preferably agree on a set of cryptographic parameters 126 for use with cryptographic algorithms 141 for further communication. Note that a module 101 and a server 105 can communicate a set of cryptographic parameters 126 by using a set of cryptographic parameters token 126*c*, such that a packet transmitted could contain the token 126*c* as an identifier for a set of cryptographic parameters 126. For example, a module 101 could send or receive the token 126*c* with an exemplary value of "Set A" illustrated in FIG. 1*i*, instead of sending or receiving the complete set of cryptographic parameters 126. In an exemplary embodiment, the transmission of cryptographic parameters 126 or a token 126*c* at a step 704 comprises encrypting the cryptographic parameters with shared secret key 129 as a symmetric ciphering key 127 in a symmetric ciphering algorithm 141*b*. Note that receiving a second set of cryptographic parameters 126 could optionally be omitted from a step 704, and in this case the first set of cryptographic parameters 126 or subset of cryptographic parameters 126*a* from a step 703 could be used by a module 101 in a subsequent step 515 or a step 316 below in FIG. 7. In embodiments where module 101 uses an eUICC 163, the second set of cryptographic parameters in a step 704 could comprise the set of cryptographic parameters 126 within a received eUICC profile 311, and a module 101 could receive the second set of cryptographic parameters 126 using a system bus 101*d*. In other words, when a module 101 is depicted in FIG. 7 and other Figures herein as receiving data, exemplary embodiments contemplate that a CPU 101*b* within module 101 receiving the data using a system bus 101*d*, and thus the received data could also be locally stored or recorded within a module 101.

The module 101 can send cryptographic parameters 126 from step 703 in a module encrypted data 403 and the module 101 can receive cryptographic parameters 126 from the server in a server encrypted data 504. In this manner, module 101 can securely communicate cryptographic parameters 126 without first deriving a module public key 111 and module private key 112. An agreed subset of cryptographic parameters 126*a* as illustrated in FIG. 1*i* may be necessary for module 101 to derive a compatible module public key 111 for the server 105. A system 100 and other systems illustrated herein can be flexible for supporting a wide range of modules 101 and servers 105, while remaining reasonably secure, by both (i) encrypting proposed crypto-

graphic parameters **126** using the shared secret key **129** and (ii) agreeing on a subset of cryptographic parameters **126***a* as illustrated in FIG. **1***i*.

After step **704**, module **101** can then derive a first module public key **111** and a first module private key **112** pair, and record the values in a memory, which could comprise a nonvolatile memory such as flash memory **101***w*. In this manner, the key pair can be available to module **101** upon recovery from lost power. A module **101** could use (i) a step **515** depicted and described in connection with FIG. **5***b* or, (ii) a step **316** depicted and described in connection with FIG. **3***b* and FIG. **5***b* in order to derive the key pair, and could also use the second set of cryptographic parameters **126** obtained through a step **704** above (which could comprise a subset of cryptographic parameters **126***a*). In embodiments where a module **101** uses an eUICC **163** to connect with a wireless network **102**, a profile activation step **316** can be used in FIG. **7** to populate or record a derived module PM key pair **315** within an activated MNO network credentials **314** for an activated eUICC profile **313**. At step **515**, or a step **316** in FIG. **7** for embodiments where a module **101** uses an eUICC profile **313**, module **101** can derive module private key **112** and a corresponding module public key **111** using (i) random number generator **128**, (ii) the second set of cryptographic parameters **126** or the second subset of cryptographic parameters **126***a* from a step **704**, (iii) cryptographic algorithms **141**, and (iv) a key pair generation algorithm **141***e*. In an embodiment where the set of cryptographic parameters **126** are omitted from a step **704**, then (i) in a step **515** in FIG. **7** module **101** could use the first set of cryptographic parameters **126** from step **703**, or (ii) in a step **316** in FIG. **7** module **101** could use the set of cryptographic parameters **126** recorded in the activated eUICC profile **313**, which could also comprise the same or equivalent set of cryptographic parameters **126** recorded in the received eUICC profile **311**. The set of cryptographic parameters **126** recorded in the activated eUICC profile **313** could also comprise a subset of cryptographic parameters **126***a* as illustrated in FIG. **1***i*.

Module private key **112** and corresponding module public key **111** can be derived in a step **515** or a step **316** according to a wide range of parameters **126**, and can be selected from different algorithms, such as RSA **153** or ECC **154**. Key derivation at step **515** could generate keys of different lengths, such as 2048 bits with RSA **153** or 283 bits with ECC **154**, and other possibilities exist as well. If using ECC **154** to derive a pair of keys for module **101**, a step **515** or a step **316** in FIG. **7** could also accommodate the use of different elliptic curves for compatibility with server **105**, such as the use of odd-characteristic curves, Koblitz curves, etc. Additional example elliptic curves utilized in the generation or derivation of a key pair include the curves sect283k1, sect283r1, sect409k1, sect409r1, etc., which are identified as example curves in IETF RFC 5480, titled "Elliptic Curve Cryptography Subject Public Key Information".

The ECC curve for a derived module public key **111** and module private key **112** can be specified in a subset of cryptographic parameters **126***a* from a step **704**. Consequently, the parameters of keys generated by module **101** at a step **515** (including key length or algorithms utilized) may be selected based upon the requirements of the application and can be included in a set of cryptographic parameters **126**. When deriving keys at a step **515** or a step **316**, in an exemplary embodiment module **101** may also preferably utilize data from sensor **101***f*, radio **101***z*, a bus **101***d*, a physical interface **101***a*, memory **101***e*, and/or a clock **160** in order to generate a seed **128***b* for random number generator **128**, or random number generator **128** could utilize these inputs directly. A random number can be input into key pair generation algorithm **141***e* in order to derive the module public key **111** and module public key **112** (with normally the module private key **112** being derived first with a key pair generation algorithm **141***e*). Since a module **101** may utilize a plurality of module **101** PM key pairs during its lifetime, including the possibility of using multiple module private keys **112** concurrently, such as using different module private keys **112** for different purposes, in exemplary embodiments module **101** can also derive a module public key identity **111***a* for module public key **111** at a step **515** or a step **316** in FIG. **7**. At subsequent steps where module **101** sends the module public key **111**, the module **101** can also send the module public key identity **111***a*. In this manner, module **101** and a server **105** can properly track which module public key **111** is being used for any given set of communications with module **101** using PM.

Upon key derivation at step **515** of FIG. **7**, or a profile activation step **316** for embodiments where a module **101** uses an eUICC to connect with a wireless network **102**, module private key **112** and module public key **111** can be recorded in a nonvolatile memory **101***w*. In an exemplary embodiment, module private key **112** is preferably not transmitted or sent outside module **101**. Note that module **101**'s internal derivation, or processing or creation, of module private key **112** and corresponding module public key **111** can have many benefits. First, module private key **112** does not need to be recorded in any other location than within module **101**, and thus may also be considered not shared. Recording module private key **112** only within module **101** avoids potential security risks of (i) storing or recording module private key **112** in other locations, such as with module provider **109**, mobile network operator **108**, or an installer or end user of module **101**, and (ii) transferring module private key **112** from these other locations. A primary security risk from storage of module private key **112** outside module **101** is that unauthorized 3rd parties may gain access to the module private key **112**.

For embodiments where a module **101** uses an eUICC **163** to connect with a wireless network **102**, the derivation of a module PM key pair in a step **316** can benefit a mobile network operator, since a module private key **112**, which can serve as the foundation for subsequent communications with a wireless network **102**, does not depend on the transmission of a module private key **112** through 3rd parties. In exemplary embodiments where a module **101** uses an eUICC **163** to connect with a wireless network **102**, module private key **112** can be derived at other times besides during a profile activation **316** step, but the result of obtaining an activated eUICC profile **313** can include steps associated with a profile activation step **316** such that an activated MNO network credentials **314** includes a module PM key pair **315** that has been derived by a module **101**.

Also note that over a potential lifetime of a decade or more of operation of module **101**, each time a new module private key **112** may be required (for various potential reasons outlined above, including the use of new activated eUICC profiles **313** in embodiments where a module **101** uses an eUICC **163** to connect with a wireless network **102**), the external recording and/or transferring of module private key **112** incurs a potential security risk. Security risks can be compounded if the external location records private keys **112** for a plurality of modules **101**. Also, by internally generating private key **112** at a step **515** or a step **316**, module **101** can overcome significant limitations and costs

requiring the distribution of a pre-shared secret key Ki or K in the form of a SIM card or similar physical distribution of a pre-shared secret key.

At step **705**, module **101** can send the module public key **111**, and the module public key **111** could be sent to a server **105** in a message **208** that includes a module identity **110**. In embodiments where a module **101** uses an eUICC **163** to connect with a wireless network **102**, a module **101** can send the module public key **111** to a server **105** associated with the wireless network **102** in a step **705**. The module **101** can also send the module public key identity **111***a* with the module public key **111** in a step **705**. In an embodiment, the module **101** can send the module public key **111** to a server different than server **105** used in a step **704**, and the different server could be a server associated with a certificate authority **118** an mobile network operator **108**, or a subscription manager **164** if an eUICC **163** is used by module **101** to connect with a wireless network **102**. The module identity **110** could be in the form of an encrypted module identity **110***a*, or a network module identity **110***b* in embodiments where a module **101** uses an eUICC **163**. The module public key **111** could be sent either as plaintext or within a module encrypted data **403**, where the shared secret key **129**, or shared secret key **510** in embodiments where module **101** uses an eUICC **163**, could be used as a symmetric key **127** with a symmetric ciphering algorithm **141***b*. By sending the module public key **111** in a module encrypted data **403**, a system **100** and other systems contemplated herein may be kept more secure, since other nodes besides server **105** would not be able to (i) read the module public key **111** or (ii) use the module public key **111** for sending module **101** unauthorized or fraudulent server encrypted data **504** with an asymmetric ciphering algorithm **141***a* and the module public key **111**.

Although not illustrated in FIG. **7**, at step **705** server **105** could authenticate message **208** at step **705** that includes the module public key **111** in order to ensure that module public key **111** is properly associated with module identity **110** and that module public key **111** is not fraudulently submitted by another node or module **101** attempting to send the data. In an exemplary embodiment, at step **705** module **101** could use the steps for authentication of the message **208** containing module public key **111** using the authentication from a step **704**. In an exemplary embodiment, module **101** could perform steps to authenticate with a server depicted and described in connection with step **1202** of FIG. 12 in U.S. patent application Ser. No. 14/064,618, filed Oct. 28, 2013 in the name of John Nix. Or, if module **101** sends module public key **111** in a step **705** at a sufficiently short period of time after step **704**, such as, but not limited to, less than an exemplary minute after step **704**, then the previous authentication from step **704** may still be applicable. In this case, the authentication of module **101** at a step **705** could comprise the authentication of module **101** from the prior step **704**. Other possibilities exist as well without departing from the scope of the present invention for a module **101** to securely send a derived module public key **111** to a server **105** in a step **705**.

At step **706**, module, module **101** can begin utilizing the new module public key **111** and module private key **112** derived in a step **515** or a step **316** in FIG. **7**, where new public key **111** was sent to a server **105** and authenticated in Step **705**. In exemplary embodiments where module **101** uses an eUICC **163**, before step **706** module **101** could also take the additional steps depicted and described in connection with FIG. **9***b* below in order to obtain a secret shared network key K **129***d* for communication with wireless network **102**. In exemplary embodiments where module **101** communicates with a server **105** independently of an eUICC **163** (other than possibly using an eUICC **163** to obtain access to IP Network **107**), then the additional steps illustrated in FIG. **9***b* to obtain a secure key K may be optionally omitted.

At a step **706**, module **101** could begin following normal operations of a data reporting steps **101***x* illustrated in FIG. **3**. At step **706**, module **101** can send a module encrypted data **403**, where the module encrypted data **403** could include either (i) a symmetric key **127** ciphered with an asymmetric ciphering algorithm **141***a* and the server public key **114**, or (ii) a server instruction **414** that could include a sensor measurement **305** or other data. If module encrypted data **403** at step **706** includes a server instruction **414**, such as, but not limited to, an exemplary server instruction **414** depicted and described in connection with FIG. **6**, then module **101** could send or receive a symmetric key **127** before step **706** and cipher data in the module encrypted data using the symmetric key **127**. Although not illustrated at step **706**, module **101** can also send a module identity **110**, an encrypted module identity **110***a*, or a network module identity **110***b* at a step **706**. If module encrypted data **403** at step **706** includes data encrypted with an asymmetric ciphering algorithm **141***a*, the module **101** may also send a module digital signature **405** at a step **706**.

At step **707**, module **101** can receive a response **209**, where the response **209** includes server encrypted data **504**, and the server encrypted data **504** can include a module instruction **502**. In this step **707** a server **105** can utilize the new module public key **111**, resulting from the key generation by module **101** in a step **515** above in FIG. **7**, to encrypt server encrypted data **504** in one of two ways. First, server **105** can encrypt server encrypted data **504** using an asymmetric ciphering algorithm **141***a* by ciphering with the new module public key **111**. Second, server **105** can encrypt server encrypted data **504** using a symmetric ciphering algorithm **141***b* by utilizing a key derivation function **141***f* including steps for ECDH **159** and (i) the new module public key **111** and (ii) the server public key **114** in order to derive a commonly shared symmetric key **127**, which could comprise a derived shared secret key **129***b*. In this second instance, module **101** can decrypt server encrypted data **504** in step **707** using a symmetric ciphering algorithm **141***b* and the commonly shared symmetric key **127** comprising a derived shared secret key **129***b*. Module instruction **502** at a step **707** could comprise an "acknowledgement" that a message **208** sent in a step **706** was properly received. Other possibilities exist as well for a module **101** to receive and process a server encrypted data **504** with a module instruction **502** in a step **707**.

At step **708**, module **101** or server **105** can determine or evaluate if a new module private key **112** and module public key **111** are required for continued operation. Another node associated with mobile network operator **108** besides server **105** could also determine if the use of new PM keys are desirable in a step **708**. Exemplary reasons for the generation of new keys by a module **101** were described at the beginning to this FIG. **7**. One reason could be the expiration of a certificate **122** for module **101**, or equivalently the expiration of a time-to-live value for a module public key **111** if module public key **111** is not recorded in the form of a certificate **122**. A second exemplary reason could be that module **101** may wish to connect with a new wireless network **102** that requires the use of PM techniques for authentication, but also a different set of cryptographic parameters **126** or algorithms in order for module **101** to

communicate through a new wireless network **102**. In an exemplary embodiment, a set of cryptographic parameters **126** for a server **105** may change or be different than with a previous server **105**, such as, but not limited to, (i) using a different elliptic curve or a different set of asymmetric ciphering algorithms **141***a*, or (ii) requiring longer key lengths. Module **101** may need to derive at a step **708** a new set of a compatible module public key **111** with a corresponding module private key **112**. A third exemplary reason could be that module **101** prefers to use a different received eUICC profile **311** in order to connect with a different wireless network **102** than the wireless network **102** utilized for communication in a step **705** or step **706**.

Other examples for reasons that a module **101** may need new public/private keys after installation with a monitored unit **119** exist as well, and any could be a reason for module **101** to determine to utilize new public/private keys. If module **101** and/or a server **105** determine that new keys are not required at step **708**, module **101** can then proceed to a step **309** and wait for a specified interval before taking further action. As illustrated in FIG. **7**, the further action could comprise returning to a step **706** and the module could continue to periodically report data regarding a monitored unit **119** in the form of periodically sending a message **208** to server **105**, and the message **208** could contain a sensor data **305**, or other data for the remote monitoring and/or control of a monitored unit **119**. In an exemplary embodiment, the determination at a step **708** could be made at other times as well, such as before a step **707** or a step **706**.

Either a module **101** or a server **105** could determine if the use of new module **101** PM keys are preferred or desirable in a step **708**. As contemplated herein, the term "PM keys" can refer to a pair of keys comprising a module public key **111** and a module private key **112**. In the embodiment where a server **105** or another node associated with mobile network operator **108** determines or evaluates that the use of new module **101** PM keys are preferred or required in a step **708**, then at a step **607** a server **105** could send a signal to module **101** to derive new PM keys. An exemplary signal for module **101** to derive new PM keys in a step **607** could be in the form of an exemplary response **209** illustrated in FIG. **6**, where the response **209** includes a module instruction **502** of "derive new PM key pair". If a module **101** determines on its own (i.e. without receiving a signal from a server **105** for deriving new keys), then step **607** may be omitted, and otherwise a step **607** can otherwise be useful or required in order to signal that a module **101** should derive new PM keys. In an exemplary embodiment, a step **607** may require sending the module instruction **502** of "derive new PM key pair" within a response **209**, where module **101** may previously have sent a message **208**. The reason can be that a module **101** may operate behind a firewall **104** or periodically sleep, and in this case a server **105** may not be able to send a module **101** the module instruction **502** at arbitrary times, but must wait until after module **101** first sends a message **208** before sending the module instruction **502** of "derive new PM key pair" in a response **209**.

A step **607** can also comprise a module **101** receiving a third set of cryptographic parameters **126** or a subset of cryptographic parameters **126***a*. A third set of cryptographic parameters **126** or a subset of cryptographic parameters **126***a* can also be optionally omitted from a step **607** and in this embodiment a prior set of cryptographic parameters **126** or a subset of cryptographic parameters **126***a*, such as the parameters **126** (*i*) received by a module **101** in a step **704** above, or (ii) initially recorded in a step **703** could apply. In a step **607** a module **101** can send a set of cryptographic parameters **126** and receive a third subset of cryptographic parameters **126***a*. Or, a module can receive a third set of cryptographic parameters **126** and send a subset of cryptographic parameters **126***a*. The subset of cryptographic parameters **126***a* could comprise a (i) single value such as specifying a named curve within an ECC standard curve **138**, a modulus to use with an RSA algorithm **153**, or a time value for a new module public key **112**, or (ii) multiple values such as two or more selected from an exemplary subset of cryptographic parameters **126***a* illustrated in FIG. **1***i*. Note that in a step **607** the module instruction **502** of "derive new PM key pair" or a similar signal could be received by a module **101** in a separate packet than either a set of cryptographic parameters **126** or a subset of cryptographic parameters **126***a*.

In addition, in a step **607** the module instruction **502** of "derive new PM key pair" or a similar signal could be received by a module **101** either as plaintext in a packet or within a server encrypted data **504**. Further, in a step **607** the third set of cryptographic parameters **126** or the subset of cryptographic parameters **126***a* could be received by a module **101** either as plaintext in a packet or within a server encrypted data **504**. As illustrated in FIG. **7**, the set of cryptographic parameters **126** or the subset of cryptographic parameters **126***a* could comprise a 3rd set of cryptographic parameters **126**, and the 3rd set of cryptographic parameters **126** may be the same or different than a 2nd set of cryptographic parameters **126** received in a step **704**. In an exemplary embodiment, a step **607** comprises receiving the third set of cryptographic parameters **126** and a module instruction **502** in the form of a received eUICC profile **311** for an eUICC **163**. The data received by module **101** at a step **607** in FIG. **7** could include a second received eUICC profile **311**, for embodiments where a module **101** uses an eUICC **163** to connect with a wireless network **102**, where the second received eUICC profile **311** can be different than a first eUICC profile **311** used in a step **316** in FIG. **7**.

At step **709** the module **101** can use the third set of cryptographic parameters **126** received in a step **607** to derive a second module private key **112** and a second module public key **111**. Module **101** could use a step **515** or a step **316** in order to derive the second module private key **112** and second module public key **111** at a step **709**. In embodiments where a module **101** uses an eUICC **163** to connect with a wireless network **102**, a step **709** could comprise module **101** deriving a second module PM key pair **315** for use in a second activated MNO network credentials **314** (different from the first set of activated MNO network credentials **314** from a step **316** above in FIG. **7**), and the third set of cryptographic parameters **126** in a step **709** could comprise the set of cryptographic parameters **126** received in the received eUICC profile **311** from a step **607** above. In other embodiments, the use of an eUICC **163** by module **101** is not required in a step **709**, and a step **709** to derive new module PM keys can be independent of the presence or use of an eUICC **163**. In other words, a module **101** and a server **105** can use some embodiments of the present invention illustrated in FIG. **7** and other Figures herein independently of the presence of an eUICC **163** and related profiles, while other embodiments may use an eUICC **163** and related profiles.

At step **709**, module **101** can derive the second module private key **112** and a corresponding second module public key **111** using (i) random number generator **128**, (ii) the third set of cryptographic parameters **126** or the third subset of cryptographic parameters **126***a* from a step **607**, (iii) cryptographic algorithms **141**, and (iv) a key pair generation

algorithm **141***e*. In an embodiment where the second set of cryptographic parameters **126** are omitted from a step **607**, then in a step **709** module **101** could use either (i) the first set of cryptographic parameters **126** from step **703** or (ii) the second set of cryptographic parameters **126** or **126***a* from a step **704**. In a step **709** a module **101** can also derive and a assign a module public key identity **111***a* to be associated with the second module public key **111**, where the module public key identity **111***a* can be used to identify and select the second module public key **111** from a first module public key **111** potentially from a step **515** above. In other words, a second module public key **111** can be associated with a second module public key identity **111***a* and a first module public key identity can be associated with a first module public key identity **111**.

According to the set of cryptographic parameters **126** or **126***a* used in a step **709**, in an exemplary embodiment the module PM keys derived in a step **709** can be associated with a different asymmetric ciphering algorithm **141***a* than the module PM keys derived in a step **515** or a step **316** in FIG. **7**. For example, the first module PM keys in a step **515** or step **316** in FIG. **7** could utilize a first ECC standard curve **138**, while the second module PM keys in a step **709** could use a second ECC standard curve **138**. Or, the first module PM keys in a step **515** or a step **316** in FIG. **7** could utilize an RSA algorithm **153**, while the second module PM keys in a step **709** could use an ECC algorithm **154**. In another embodiment at step **709**, the first module PM keys in a step **515** or step **316** in FIG. **7** could utilize an RSA algorithm **153** with a shorter key length, such as, but not limited to, an exemplary 1024 bits, while the second module PM keys in a step **709** could use an RSA algorithm **153** with a longer key length such as, but not limited to, an exemplary 2048 bits. Further, the first module PM keys in a step **515** or step **316** in FIG. **7** and the second module PM keys in a step **709** could use the same algorithm and key length. Other possibilities for differences or similarities between the first module PM keys in a step **515** or step **316** and the second module PM keys in a step **709** are possible as well without departing from the scope of the present invention.

After deriving the second module PM keys in a step **709**, at step **710** the module **101** can send the second module public key **111** with the module identity **110** to a server **105**. In embodiments where a module **101** uses an eUICC **163** to connect with a wireless network **102**, the module **101** can send the second module public key **111** associated with an activated eUICC profile **313** with the network module identity **110***b* to a server **105** associated with (i) wireless network **102** and/or (ii) subscription manager **164**. In exemplary embodiments, the second module public key **111** can be sent with the second module public key identity **111***a*. The module **101** can send the data in a message **208**. In an exemplary embodiment the module **101** can send (i) the second module public key **111** and a module identity **110**, and (ii) authenticate or verify data sent by module **101** in a step **710** using the first module private key **112** from a step **515** or a step **316** in FIG. **7**. The authentication or verification of data sent by module **101** in a step **710** could comprise verifying or authenticating data sent with the second module public key **111**, such as verifying or authenticating module identity **110** or a network module identity **110***b*. Or the authentication or verification of data sent by module **101** in a step **710** could comprise verifying or authenticating the second module public key **111**, and other possibilities exist for a module **101** to send the second module public key in an authoritative manner.

In an exemplary embodiment, in a step **710** the module **101** can use the first module private key **112** to verify or authenticate the second module public key **111** sent using at least one of several sub-steps. The sub-steps at a step **710** to verify the second module public key **111** using the first module private key **112** could comprise any of (i) sending the second module public key **111** and a module identity **110** with or in a module encrypted data **403** that uses a symmetric ciphering algorithm **141***b*, where the symmetric key **127** for encrypting and decrypting the module encrypted data **403** at step **710** could previously be communicated before step **710** using the first module private key **112** (such as, but not limited to, a module **101** receiving the symmetric key **127** from a server **105** in a server encrypted data **504**, where the server encrypted data **504** was deciphered with an asymmetric ciphering algorithm **141***a* and the first module private key **112**), (ii) sending the second module public key **111** and module identity **110** with a module digital signature **405** where the module digital signature **405** is calculated or processed by module **101** using the first module private key **112** from a step **515** in FIG. **7**, (iii) using a derived shared secret key **129***b* with a message digest authentication for verifying a sent message **208** with the second module public key **111** at step **710**, where the derived shared secret key **129***b* was processed using a key derivation function **141***f* and the first module private key **112**, and/or (iv) using a derived shared secret key **129***b* as a symmetric key **127** for encrypting data sent with the second module public key **111**, where the derived shared secret key **129***b* was processed using a key derivation function **141***f* and the first module private key **112**.

Other possibilities exist as well without departing from the scope of the present invention for using the first module private key **112** from a step **515** or a step **316** in order for a module **101** to verify or authenticate data sent with the second module public key **111** at a step **710**. As illustrated in FIG. **7**, after step **710**, the module **101** can return to a step **706** and continue regular operation such as, but not limited to, collecting sensor data **305** and sending the data periodically in a module encrypted data **403**. In embodiments where a module **101** uses an eUICC **163**, module **101** could send and receive application data with a second wireless network **102** after completing step **710**. Upon returning to step **706**, the module encrypted data **403** could use the second module PM keys derived in a step **709**. In embodiments where module **101** returns to step **706**, depicted values for subsequent steps could increment, such upon returning to step **709** for a second time, then the depicted values for "second module public key" and "3rd parameters" could become "third module public key" and "4th parameters" at the second iteration of step **709**, etc.

Benefits of using the first module private key **112** in authentication of the second module public key **111** at a step **710** include a server **105** could use the first module public key **111** received by server **105** in a step **705** in order to authenticate or verify the correct module **101** sends the second module public key **111**. In addition, module **101** may communicate with a plurality of servers **105**, including servers from different mobile network operators **108** over time. The plurality of servers **105** could share the first module public key **111** such that when a step **710** occurs, module **101** may send the second module public key **111** and module identity **110** to a different server **105** than the server **105** from a step **705** or step **706**. In embodiments where a module **101** uses an eUICC **163** in order to connect with a wireless network **102**, either (i) different wireless networks **102** or (ii) an eUICC subscription manager **164** could share

the first module public key **111** in order to authenticate the second module public key **111** in a step **710** of FIG. **7**.

In other words, the substeps described in connection with a step **710** as described in the preceding three paragraphs could be conducted by a server **105** using the first module public key **111** received in a step **705** in order to authenticate the second module public key **111** from a step **709** (and a module **101** could use the first module private key **112** for the authentication of the second module public key **111**). By module **101** authenticating or verifying data with the second module public key **111** using the first module private key **112**, the different server **105** could access and use the first module public key **111** in authentication or verification steps performed by the different server **105** in order for the server to securely receive the second module public key **111**. Security for a server **105** in future steps, such as securely receiving future messages **208** after a step **710** can depend on a server **105** recording the correct second module public key **111** for a module **101**, including preventing unauthorized or fraudulent parties from attempting to send the second module public key **111**.

In an exemplary embodiment, the module identity **110** in a step **710**, and other steps for communication a module identity **110** in FIG. **7**, could comprise an encrypted module identity **110***a*. Module **101** could sent the encrypted module identity **110***a* with an algorithm token **190**, and a server **105** could use a secret ciphering algorithm deciphering **162** in order to convert the encrypted module identity **110***a* into a plaintext module identity **110**. In this manner, the module identity **110** could be securely transmitted across a public network such as the IP Network **107**. The second module public key **111** in a step **710** could be sent in a module encrypted data **403**, such that third parties may not reasonably be able to read the plaintext second module public key **111**. As noted elsewhere herein, any given module public key **111** may not need to be publicly shared and could remain confidential for an mobile network operator **108**, and in this manner the security for communications between module **101** and server **105** can be further increased, since a potential attacker could be prevented from having reasonable access to a module public key **111**. Further, module **101** could use a plurality of module public keys **111** for different purposes, including different module public keys being associated with different asymmetric ciphering algorithms **141***a*. A first module public key **111** could be used with a first wireless network **102** (possibly in the form of an activate MNO network credentials **314**), a second module public key **111** could be used for verifying module digital signatures **405**, and a third module public key **111** could be for a different mobile network operator **108**, etc. The use of different module public keys **111** could be specified using a module public key identity **111***a*. In exemplary embodiments, a first subset of the module public keys **111** may be sent by a module **101** in a module encrypted data **403** and a second subset of the module public keys **111** could be sent by the module **101** as plaintext within a datagram.

As illustrated in FIG. **7**, the collection of steps from step **515** through step **710**, including loops through a step **309**, can collectively comprise individual sub-steps for a step **712** as depicted in FIG. **7**. Step **712** can include a plurality of sub-steps including module **101** deriving a first set module PM keys at a step **515**, determining that a new set of module PM keys are needed in a step **708**, receiving a new set of cryptographic parameters **126**, and deriving a second set of module PM keys using the new set of cryptographic parameters **126** in a step **709**, and sending the new, second module public key **111** while performing authentication in a step **710**, etc. In addition, the collection of steps from step **702** through step **704** can comprise sub-steps for a step **711**. A step **712**, comprising the collection of sub-steps as depicted and described FIG. **7**, may be utilized in FIG. **9***a* below. A step **711** may be utilized in FIG. **10** below.

FIG. **8**

FIG. **8** is a simplified message flow diagram illustrating an exemplary message sent by a module, wherein the message includes a derived module public key, in accordance with exemplary embodiments. As discussed in FIG. **5***b*, there can be cases where module **101** derives a new module public key **111** and new module private key **112**. On example would be the initial creation of the key pairs by module **101**, and many other examples could exist as well. FIG. **8** can illustrate an exemplary format and contents of a message **208** for steps **710** of FIG. **7**. This exemplary message **208** can also help to illustrate the significant differences from conventional technology and improvements for efficient and secure communications by utilizing embodiments contemplated herein. Since a message **208** illustrated in FIG. **8** could be related to more than one module public key **111**, as depicted and described herein the new module public key **111** can be referred to as new module public key **111'** and the prior applicable module public key **111** can be referred to as module public key **111**. Likewise, a new module public key identity **111***a* can be referred to as a new module public key identity **111***a*', and the prior applicable module public key identity **111***a* can be referred to as module public key identity **111***a*.

A message **208** illustrated in FIG. **8** using a step **710** from FIG. **7** can include (i) sending new module public key **111'**, a module public key identity **111***a*', a module identity **110**, a server instruction **414**, a security token **401**, a subset of cryptographic parameters **126***a* associated with (i) the new module public key **111'** and/(ii) or cryptographic algorithms **141** for using the new module public key **111'**. Exemplary cryptographic parameters **126***a* illustrated in FIG. **8** include (i) a secure hash algorithm **141***c* to utilize in signatures, which could comprise the SHA 256 algorithm as shown (which may also be known as the SHA-2 algorithm), (ii) a selected elliptic curve for use with ECC algorithms **154** or a modulus to use with RSA algorithms **153**, and (iii) a time-to-live value for the new module public key **111'**, such as, but not limited to, the illustrated "time to live" value of 1 year shown in FIG. **8**. The time value for the validity of new module public key **111'** could alternatively be specified in a set expiration date. Other values associated with cryptographic algorithms **141** could be included in a set of cryptographic parameters **126** as well, and the illustrated values are intended to be exemplary instead of limiting. In exemplary embodiments, the set of cryptographic parameters **126** in a message **208** could comprise a set of cryptographic parameters **126** depicted and described in connection with FIG. **1***i*. Or, module **101** could send a set of cryptographic parameters token **126***c* to identify a set of cryptographic parameters **126** instead of sending the complete list of cryptographic parameters **126**. Note that a set of cryptographic parameters **126** or **126***a* or token **126***c* could be optionally omitted in the message **208** illustrated in FIG. **8** when a prior message **208** or step had negotiated or established the set of cryptographic parameters **126** or **126***a* to use with the new module public key **111'**.

Additional values or fields within a message **208** associated with communicating a new module public key **111'** with a server **105** could include a server instruction **414** of "new public key". This server instruction **414** could inform server **105** to utilize the new module public key **111'** within the

message **208**. Module public key identity **111***a*' can include a sequence number or identity for the new module public key **111'**, such that module **101** or server **105** can properly reference and/or record the key from a plurality of module public keys **111** that could be associated with module identity **110**. Although module public key identity **111***a*' is illustrated as a separate field in server instruction **414**, module public key identity **111***a*' could optionally be included in a set of cryptographic parameters **126**, such that the value within cryptographic parameters **126** specifies a current sequence number of module public key identity **111***a*' for the new module public key **111'** included in a message **208**. In addition, although the module public key identity **111***a*' illustrated in FIG. **8** could be a sequence number, the module public key identity **111***a*' could also optionally be globally unique. For example, the module public key identity **111***a*' could comprise a combination of a unique serial number from a module **101** and then a sequence number. With a globally unique module public key identity **111***a*, a server **105** reading the module public key identity **111***a* could determine a module **101** with a module identity **110** associated with any given module public key identity **111***a*.

Other fields and features within a message **208** as illustrated in a FIG. **8** can be similar or equivalent to the fields presented in FIG. **6**. In an exemplary embodiment, the new module public key **111'** can be transmitted by a module **101** using at least one of (i) channel coding **406** for a body **602** of message **208** and/or (ii) forward error correction such that message **208** could be transmitted multiple times concurrently in order to increase the probability of receipt by a server **105**. In an exemplary embodiment, a message **208** containing the new module public key **111'** could be sent by module **101** three times concurrently, and other possibilities exist as well. In an exemplary embodiment, the module identity **110** could be included within an encrypted module identity **110***a*. Module **101** could use a secret symmetric ciphering algorithm **161** to encrypt the module identity **110**. In another embodiment illustrated in FIG. **8**, module identity **110** could be sent as plaintext within the message **208** that includes the new module public key **111'**.

For a message **208** in FIG. **8** comprising a message for a step **710** in FIG. **7**, each of (i) destination IP:port number **207**, (ii) parameters **126**, and (iii) shared secret key **510** could be updated by server **105** using a module instruction **502** within a server encrypted data **504** before message **208** illustrated in FIG. **8** is transmitted or sent by module **101**. After receiving message **208**, server **105** can use the module identity **110** illustrated in a body **602** of FIG. **8** to select at least one of (i) a symmetric key **127** associated with module identity **110**, where the symmetric key **127** could comprise a session key, and/or (ii) a prior module public key **111** associated with the module identity **110**. The symmetric key **127** could be established in steps such as a step **706** or the prior module public key **111** (i.e. not the new module public key **111'** in FIG. **8**) sent in a step **705**. The server **105** can use the selected symmetric key **127** or selected prior module public key **111** to authenticate message **208**. As described in step **710** of FIG. **7** and elsewhere herein, a server **105** may preferably authenticate message **208** that includes new module public key **111'** in order to confirm that module public key **111** originated from physical module **101** with a hardware module identity **110** (as opposed to being an imposter submitting the new module public key **111'**). In one example, successfully decryption the module encrypted data **403** using the symmetric key **127** would authenticate or verify the message **208**, since only the valid and correct module **101** could reasonably have access to the symmetric key **127** to encrypt the new module public key **111'**. Other possibilities exist as well for a module **101** to authenticate a message **208**.

Although not illustrated in FIG. **8**, in an exemplary embodiment new module public key **111'** could also be sent in a message **208**, where the new module public key **111'** and parameters **126** (if present) can be included in plaintext format within a datagram **601***a*. The security of a system **100** and other systems illustrated herein can be further increased by both (i) ciphering new module public key **111'** and the set of cryptographic parameters **126**, and (ii) only sharing the new module public key **111'** in a confidential manner with server **105** and/or a set of servers **1010**. If module **101** needed a module public key **111** for other purposes, such as, but not limited to, obtaining a certificate **122**, then a second, publicly disclosed module public key **111** could be utilized to authenticate a message **208** from FIG. **8** that is sent as plaintext without symmetric ciphering **141***b*, where the second module public key **111** is different than and sent before the new module public key **111'** that is sent to a server **105** in a module encrypted data **403**.

Although not illustrated in FIG. **8**, in an exemplary embodiment, new module public key **111'** can be authenticated with server **105** using a module digital signature **405**. When message **208** illustrated in FIG. **8** comprises a message for a step **710** illustrated in FIG. **7**, such that a prior module public key **111** has previously been sent to server **105** such as in a step **705**, then message **208** could include a module digital signature **405** using the previous module private key **112** (i.e. not the new module private key **112** associated with the new module public key **111'** in the message **208** shown in FIG. **8**). In another embodiment, module digital signature **405** could be omitted, and message **208** with new module public key **111'** could be authenticated using a message digest algorithm and a shared secret key **129**, where the shared secret key could be sent using a step **706** or **707** from FIG. **7**. Other possibilities for a module **101** to send a new module public key **111'** in a message exist as well without departing from the scope of the present invention.

FIG. **9***a*

FIG. **9***a* is a flow chart illustrating exemplary steps for a module to use a shared secret key to authenticate with a server, in accordance with exemplary embodiments. In order to utilize communications secured with PM techniques such as private keys, public keys, certificates, and identities, a module **101** may preferably obtain or generate these keys and certificate in a secure manner. In exemplary embodiments, the distribution of module **101** may include the possession or control of module **101** passing through entities outside of the control of a module provider **109** and/or a mobile network operator **108**. Consequently, module **101** may need a secure method of authenticating with a server **105** after distribution and upon the initiation of operation with a monitored unit **119**. Note that securely initiating communications after distribution, potentially through third parties outside the control of module provider **109** and/or mobile network operator **108** can be a challenge with conventional technology since keys such as a pre-shared secret key **129***a* (such as a traditional key K in a SIM) or private keys not internally derived may need to also pass through the distribution channel in order to initiate secure communication with conventional technology. FIG. **9***a* illustrates an embodiment of the present invention, where a module **101** can begin secure communication with a server **105** without passing any keying material through a distri-

bution channel. In this manner, (i) a system such as system **100** and other exemplary systems **100** can be made more secure, and (ii) the additional handling costs of passing keying material through a distribution channel, possibly in the form of a secret key in a SIM card or UICC, can be avoided.

At step **901**, a manufacturer can complete manufacturing of a module **101**, including assembling the hardware, software, and/or firmware components illustrated in FIG. **1***b* and FIG. **1***c*. A module identity **110** and component parameters **101***t* can be recorded in a step **901**. The module identity **110** could be recorded in a protected address, such as, but not limited to a ROM **101***c* or other address on a system bus **101***d*. A protected address is also described in connection with FIG. **7** and elsewhere herein. The component parameters **101***t* could be recorded with each of the exemplary components illustrated in FIG. **1***b*, FIG. **1***c*, and FIG. **1***e*. Exemplary component parameters **101***t* are depicted and described in connection with FIG. **1***e*. The component parameters **101***t* could be read using a system bus **101***d* and recorded into nonvolatile memory such as, but not limited to, flash memory **101***w* in a module **101**. Or, the module manufacturer could read or specify the individual component parameters **101***t* before assembly of module **101** and record the collection of component parameters **101***t* into a file. At a step **901** the component parameters **101***t* could be recorded into a file for storage in module **101** and a server **105**. In exemplary embodiments, both module **101** and server **105** can record the module identity **110** and component parameters **101***t*.

At step **902**, a module program **101***i*, a first set of cryptographic parameters **126**, and a server address **207** can be recorded into a nonvolatile memory such as, but not limited to, a flash memory **101***w*. Step **902** can occur at one of several possible points in time between module **101** manufacturing and installation with a monitored unit **119**. Step **902** could be performed by the manufacturer during manufacturing. Step **902** could be performed by a distributor during distribution. Step **902** could be performed by a technician or end-user upon installation of module **101** with a monitored unit, and other possibilities exist as well for the time when a step **902** could occur. The server address **207** could comprise a server name **206** instead of an IP address, and module **101** could use the server name **206** at a later step to lookup a server IP address **207** using DNS or DNSSEC. A set of cryptographic parameters **126** are depicted and described in connection with FIG. **1***d* and FIG. **1***i* and elsewhere herein. A module program **101***i* is depicted and described in connection with FIG. **1***b*. Note that many other parameters and values may be loaded into a non-volatile memory **101***t* besides the ones illustrated in step **902** of FIG. **9***a*, including data for connecting with a wireless network **102**, and FIG. **9***a* illustrates an exemplary set of steps in order to utilize the efficient and secure systems and methods for communication contemplated herein. As one example, a module **101** could also include a SIM card, a UICC, or an embedded UICC **163** (eUICC), in addition to recording in a module **101** the data illustrated at step **902** of FIG. **9***a*. In accordance with an exemplary embodiment, the data illustrated at a step **902** of FIG. **9***a* can be recorded in a SIM card, UICC, or eUICC **163**. For embodiments with an eUICC **163**, the data recorded in a step **902** could be included within a received eUICC profile **311**. Thus, although other embodiments of the present invention illustrated in FIG. **9***a* (other embodiments contemplated in the previous two sentences) allows a module **101** to securely initiate communication with a server **105** without depending on pre-shared security keys such as a SIM card or eUICC **163**, the pre-shared materials in traditional mobile networks such as SIM cards and a eUICC could include the data and techniques contemplated herein.

At step **903**, the module **101** can derive a shared secret key **129***c* using the component parameters **101***t*. In an exemplary embodiment, the module **101** can derive the shared secret key **129***c* using the steps depicted and described in connection with Figure if and FIG. **1***h*. Module **101** could use the set of component parameters **101***t* and an algorithm token **190** as input into a shared secret algorithm **141***g*, with an output of the shared secret key **129***c*. Although not illustrated in FIG. **9***a*, a server **105** could record or could query a module database **105***k* for the same set of component parameters **101***t* with the module identity **110** and shared secret algorithm **141***g*, and upon receipt of the module identity **110** and algorithm token **190**, then the server **105** could derive the same shared secret key **129***c*.

After step **903**, upon connection to the IP Network **107**, possibly through a wireless network **102**, module **101** could conduct a step **904**. In step **904**, module **101** can perform a 2-way authentication with a server **105** using the shared secret key **129***c*, where the shared secret key **129***c* in a step **904** could be derived in a step **903**. The server address **207** as the destination of outbound packets, such as a message **208** to initiate the authentication, could be recorded in a step **902** above. Module **101** can send the algorithm token **190** used to derive the shared secret key **129***c* in a step **903** to the server **105** in a message **208**, in order for the server **105** to derive the same shared secret key **129***c*, where the server **105** can use the same set of component parameters **101***t* and shared secret algorithm **141***g* as depicted and described in connection with FIG. **1***f*. Note that a benefit of both nodes deriving the same or equal shared secret key **129***c* is that only the algorithm token **190** may need to be sent from module **101** to server **105** at a step **904**, and the algorithm token **190** may also be sent as plaintext. Upon both nodes accessing the same shared secret key **129***c*, sub-steps can be taken by both nodes in order to conduct the 2-way authentication using the shared secret key **129***c*. In an exemplary embodiment, module **101** can conduct the 2-way authentication using wireless network standards such as, but not limited to, ETSI standard TR 131 900 v.10.0.0 and related documents.

At step **904**, server **105** can authenticate module **101** using the module identity **110** received in a message **208** and a message digest algorithm, such as described in IETF RFC 2617, titled "HTTP Authentication: Basic and Digest Access Authentication", and other reasonably secure authentications techniques using a shared secret key **129***c* could be utilized without departing from the scope of the present invention. In order to authenticate, module **101** could take steps to demonstrate to server **105** that module **101** holds the same shared secret key **129***c* as server **105**. Module **101** can properly respond to a challenge/nonce in the steps for a message digest by sending a secure hash value using (i) the challenge/nonce from a server **105** and (ii) the shared secret key **129***c*. Or, module **101** could authenticate by generating a module digital signature **405** in a message **208** using the shared secret key **129***c*. In addition, module **101** could utilize the shared secret key **129***c* as a symmetric key **127** to encrypt a module encrypted data **403** with symmetric ciphering **141***b*, and if server **105** could properly decrypt the module encrypted data **403** using the same shared secret key **129***c* on the server, then server **105** would know the correct module **101** sent the message **208** and thereby would be authenticated. Other possibilities exist as well for a module **101** to

authenticate with a server **105** using a shared secret key **129***c* and a step **904** in FIG. **9***a* without departing from the scope of the present invention.

Continuing at step **904**, module **101** can also preferably authenticate server **105** in order to complete a 2-way authentication. Module **101** can take steps to ensure or verify that server **105** with reasonable assurance also holds the shared secret key **129***c*. Module **101** could authenticate server **105** using message digest, such that module **101** issues a challenge/nonce, and verifying that server **105** properly responds to the challenge/nonce with a correct secure hash value, such as the output from a secure hash algorithms **141***c*. Or, server **105** could authenticate with module **101** by the module receiving a server digital signature **506** in a response **209** using the shared secret key **129***c*. In addition, module **101** could utilize the shared secret key **129***c* as a symmetric key **127** to decrypt a received server encrypted data **504** with symmetric ciphering **141***b*, and if module **101** could properly decrypt the server encrypted data **504** using the shared secret key **129***c*, then module **101** would reasonably know the correct server **105** sent the response **208** and thereby the server **105** would be authenticated. Other possibilities exist as well for a server **105** to authenticate with a module **101** using a shared secret key **129***c* without departing from the scope of the present invention.

Continuing at step **904**, module **101** can receive a set of cryptographic parameters **126**, preferably after module **101** completes authentication with server **105** (in order for server **105** to not send the set of cryptographic parameters **126** to unauthenticated 3rd parties). A set of cryptographic parameters **126** received in a step **904** can also comprise a second set of cryptographic parameters **126**, where the second set of cryptographic parameters **126** could be different or the same as the first set of cryptographic parameters **126** from a step **902**. The set of cryptographic parameters **126** at step **904** can comprise a subset of cryptographic parameters **126***a* as depicted and described in connection with FIG. **1***i*. Module **101** could send the set of cryptographic parameters **126** recorded in step **902** to the server **105**, and the server **105** could respond with a subset of cryptographic parameters **126***a*. In another embodiment, server **105** could send module **101** a set of cryptographic parameters **126** at step **904**, and module **101** could send a subset of the cryptographic parameters **126***a* to the server. At step **904** either module **101** or server **105** could send the subset of cryptographic parameters **126***a*. In either case, at the conclusion of step **904** the module **101** and server **105** can preferably agree on a set of cryptographic parameters **126** for use with cryptographic algorithms **141** for further communication. In an exemplary preferred embodiment, a set of cryptographic parameters **126** sent and/or received at a step **904** may preferably be encrypted using the shared secret key **129***c*, such as using the shared secret key **129***c* as a symmetric ciphering key **127**. In this manner, module **101** and server **105** can encrypt the set of cryptographic parameters **126** received in a step **904**, without requiring the secure transmission of a different key other than the mutually derived shared secret key **129***c*.

After step **904**, module **101** can then proceed to a step **712**, where a step **712** is depicted and described in connection with FIG. **7**. As depicted and described in connection with FIG. **7**, step **712** can include a plurality of sub-steps including module **101** (*i*) deriving a first set module PM keys at a step **515**, (ii) determining that a new set of module PM keys are needed in a step **708**, (iii) receiving a new set of cryptographic parameters **126** in a step **607**, and (iv) deriving a second set of module PM keys using the new set of cryptographic parameters **126** in a step **709**, and (v) sending the new, second module public key **111** with authentication in a step **710**, etc. In this manner, module **101** can use a secret shared key **129***c* to initially establish secure communication with a server **105**, and subsequently use the other steps illustrated in the present invention, such as, but not limited to, the steps illustrated in FIG. **7**, in order to securely derive a series of module PM key pairs and authoritatively send a derived module public key **111**.

Although not illustrated in FIG. **9**, in exemplary embodiments, there can be cases where a module **101** would return from step **712** back to prior steps, including steps **902**, **903**, and/or, **904**. After module **101** begins operation, such as, but not limited to, collecting sensor data **305** associated with a monitored unit **119**, module **101** could return to a step **904** upon connection with a new set of servers **1010** (illustrated in FIG. below) where module **101** may prefer to conduct a 2-way authentication of the set of servers **1010** in a step **904**. In an exemplary embodiment, module **101** could utilize DNS and a server name **206** or a server identity **206** in order to query or lookup a destination IP address **106** in order to send a message **208**. Since DNS records can change over time, and a mobile network operator **108** could utilize different servers **105** or set of servers **1010** over time, module **101** may determine that a destination IP address **106** associated with a DNS response can change. Upon a change in the IP address **106** associated with a server **105**, in an exemplary embodiment, module **101** could return to a step **904** upon a change in IP address **106** in order to conduct the authentication of server **105** a second time. In this exemplary subsequent return to step **904**, the module could also receive another set of cryptographic parameters **126** or **126***a* and use this set of cryptographic parameters **126** or **126***a* upon a subsequent return to step **712**.

In another exemplary embodiment, module **101** could return to either a step **903** or step **902** upon a reset or equivalent operation of module **101**. After module **101** begins operation, such as, but not limited to, collecting sensor data **305** associated with a monitored unit **119**, module **101** could return to a step **903** or **902** upon receiving a reset command. The reset command could be received locally at module **101** by an end-user or technician, or remotely from a server **105** via a response **209** with a module instruction **502** of "reset" or a similar command. The reset command could comprise a "factory reset" command in order to wipe confidential data from module **101**. A "reset" command could be received by a module **101** for many different purposes, including (i) a change in ownership of module **101**, (ii) a lack of payment from an end-user to mobile network operator **108**, such that mobile network operator **108** determines that operation of module **101** (and associated variable costs such as the costs of using a network **102**) should cease, (iii) a firmware upgrade of module **101** where the new firmware requires a new configuration, and other possibilities exist as well for a module **101** to receive a reset command. Upon receiving a reset command and returning to a step **902**, module **101** could complete step **902** and subsequent steps. Upon receiving a reset command and returning to a step **903**, module **101** could complete step **903** and subsequent steps.

FIG. **9***b*

FIG. **9***b* is a flow chart illustrating exemplary steps for a module to derive a shared secret key K using a derived module PM key, in accordance with exemplary embodiments. Although the use of an embedded universal integrated circuit card (eUICC) such as an eUICC **163** depicted and described in FIG. **1***c* and other Figures herein can provide significant benefits of reducing the costs and com-

plexities associated with the physical distribution of media or units such as a physical SIM card or UICC, significant challenges and requirements have impeded the development and adoption of eUICC standards as of 2013, such as those proposed in ETSI TS 103 383 and related standards. One primary challenge has been the secure distribution of shared secret key K for operation with a wireless network **102** that functions as a PLMN based on ETSI standards, such as, but not limited to, 4G LTE networks and also networks using 4G LTE Advanced. Shared secret key K for a regular SIM or UICC can comprise the key K contemplated for a SIM in 3GPP TS 33.401 V12.9.0 and related standards, and shared secret key K can be used to derive session keys such as the cipher key (CK) and the integrity key (IK) as described in ETSI and 3GPP standards in order to a module **101** such as a mobile phone, mobile station, or user equipment to access a wireless network **102**. Shared secret key K is normally recorded by both the wireless network **102** and a UICC within a module **101** using conventional technology.

FIG. **9***b* illustrates and embodiment of the present invention where a module **101** can securely derive shared secret network key K **129***d* using a derived module private key **112**. As described below in FIG. **11**, a network **102** can also derive the same shared secret network key K **129***d*, without requiring the recording or distribution of shared secret network key K **129***d* in a eUICC profile **311**. Note that (i) an eUICC profile **311** could include an initial key K **325**, which can comprise a shared secret key K contemplated in 3GPP TS 33.401 V12.9.0 and related standards, and (ii) the initial key K **325** could be used for an initial connection with wireless network **102** and the initial key K **325** could comprise a secret shared key **510** in FIG. **9***b*, but module **101** and a mobile network operator **108** can use change from using the initial key K **325** in an first connection by module **101** to wireless network **102** to using the derived shared secret network key K **129***d* in a second and subsequent connection by module **101** to wireless network **102**. Using the steps depicted and described in FIG. **9***b*, the derived shared secret network key K **129***d* does not need to be transmitted to or from a module **101**, thereby increasing security. Further, the secure derivation of a shared secret network key K **129***d* by both a module **101** and a wireless network **102** can provide compatibility with the well established and incumbent PLMN infrastructure that utilizes a pre-shared secret key K as currently recorded in a SIM card or UICC with conventional technology. In this manner, the use of an eUICC **163** by a module **101**, where network credentials **314** could include or be associated with a derived module private key **112** as contemplated in the present invention, can remain compatible with incumbent PLMN infrastructure while achieving the security benefits of a module **101** and mobile operator network **108** mutually deriving shared secret key K.

At a step **905**, a module **101** with an eUICC **163** can read a received eUICC profile **311**. The received eUICC profile **311** could be recorded in a nonvolatile memory such as, but not limited to, a flash memory **101***w*. A module **101** could have previously received the received eUICC profile **311** from an eUICC subscription manager **164** or another entity, including a first wireless network **102**. Or, the received eUICC profile **311** in a step **905** could be loaded into module **101** by a manufacturer, distributor, or end user. At a profile activation **316** step, a module **101** using the eUICC **163** can convert the received eUICC profile **311** into an activated eUICC profile **313**. As contemplated herein and throughout the present invention, an activated eUICC profile **313** can comprise a selected and enabled network access application state as illustrated in Figure D.**1** of ETSI TS 103 383 v.2013-02 for the activated eUICC profile **313**, and other possibilities exist as well. In exemplary embodiments, the step **316** illustrated in FIG. **9***b* can be performed concurrently with a step **906** below.

At a step **316**, a module **101** can derive a module private key **112** and a module public key **111**. Module **101** could use a step **316** in order to derive the module PM key pair **315**, and a module **101** can use sub-steps depicted and described in connection with a step **316** in FIG. **3***b*, FIG. **5***b*, and FIG. **7**. A module **101** could also use a step **515** as depicted and described in connection with FIG. **5***b* and FIG. **7** in order to derive the module private key **112** and module public key **111**. Module **101** could also use a set of cryptographic algorithms **141**, a key pair generation algorithm **141***e*, a random number generator **128**, and a set of cryptographic parameters **126** to process or derive the module PM key pair **315** at a step **316** in FIG. **9***b*. Module private key **112** and module public key **111** could be processed and formatted according to either an RSA algorithm **153** or an ECC algorithm **154**. The set of cryptographic parameters **126** could comprise a subset of cryptographic parameters **126***a* as illustrated in FIG. **1***i*. A set of cryptographic parameters **126** used in a step **316** in FIG. **9***b* for deriving the module PM key pair **315** could be included in the received eUICC profile **311**, as illustrated in FIG. **3***b*. Or, the set of cryptographic parameters **126** used in a step **316** in FIG. **9***b* for deriving the module PM key pair **315** could be included in the eUICC **163**. In exemplary embodiments, module private key **112** and module public key **111** may utilize an ECC algorithm **154** in order to provide a higher level of security for a given key length. Module **101** could also calculate or process a key K module token **1103** at a step **316** in FIG. **9***b*, and the use and function of a key K module token **1103** is depicted and described in connection with FIG. **11** below.

Note that the actual step of key derivation could be performed independently of a profile activation step **316**, such that a module **101** derives the module PM key pair **315** before a profile activation **316** step, but upon completion of a profile activation step **316**, an activated eUICC profile **313** can preferably include or be associated with a derived module private key **112** and derived module public key **111** in exemplary embodiments. In other words, in order for a module **101** to use an activated eUICC profile **311** (which could also comprise a selected and/or enabled profile) to connect with a wireless network **102**, the activated eUICC profile **311** can preferably be associated with a derived module private key **112** and derived module public key **111**, where the derived keys could be processed by module **101** using a key pair generation algorithm **141***e*. Module **101** could use a set of cryptographic parameters **126** recorded in a received eUICC profile **311** to derive the module PM key pair **315**.

At a step **906**, the derived module public key **111** and derived module private key **112**, which could be associated with an activated eUICC profile **313**, resulting from a step **316** above in FIG. **9***b*, can be recorded in a nonvolatile memory, such as, but not limited to, a flash memory **101***w*. In this manner, PM keys could be later read by module **101** after a power off state or similar state where a RAM **101***e* could be flushed. Although not illustrated in FIG. **9***b*, module **101** could also send the derived module public key **111** to the wireless network **102** and/or a server **105**, such that other entities besides module **101** can use the derived module public key **111** for communication with module **101**. Module **101** could use a step **517** to authenticate the derived module public key **111** sent. After a successful sending of the derived

module public key **111** to the wireless network **102** and/or a server **105**, module **101** could optionally choose to no longer record derived module public key **111** associated with a step **316** within nonvolatile memory of module **101**.

At a step **907**, module **101** could connect with a wireless network **102**. The connection procedure could include an LTE attachment procedure and a series of steps for LTE authentication. A module **101** at a step **907** could promote from a detached state to an "radio resource connected" state using attachment and promotion procedures outlined in 3GPP specification TS 24.301 v12, entitled "Non-Access-Stratum (NAS) protocol for Evolved Packet System (EPS); Stage 3". In a first exemplary embodiment, module **101** could attach and authenticate with wireless network **102** in a step **907** using the initial key K **325** recorded in a received eUICC profile **311**, where the initial key K **325** recorded in a received eUICC profile **311** could comprise a first shared secret network K key (such as a pre-shared secret key K described in 3GPP TS 33.401 V12.9.0). Module **101** could also connect with and authenticate at a step **907** using the network module identity **101***b* recorded in a received eUICC profile **311**. In the embodiment where an initial key K **325** comprises a first shared secret network K key, module **101** could authenticate with the network **102** using the standard procedure or receiving a RAND **912** and processing and sending a response RES **913**, as described at step **910** below for FIG. **9***b*. In an exemplary embodiment, a difference with authentication at a step **907** from authentication at a step **910** is that authentication at a step **907** could utilized the initial key K **325** recorded in a received eUICC profile **311**, while a later authentication at a step **910** can utilize a different key.

Although not illustrated in FIG. **9***b*, in another exemplary embodiment, module **101** can connect or complete an attachment procedure with wireless network **102** at a step **907** without a valid key K and network module identity **110***b* (or equivalently a "null" value for the key K and also possibly a "null" value for the network module identity **110***b*), and this case would also be synonymous or equivalent to a module **101** attaching to wireless network **102** without a valid SIM card or UICC. Note that both standards and deployed, operational wireless networks widely support the attachment of mobile phones without a valid SIM/UICC in order to support emergency services. Or, in an exemplary alternative embodiment for a step **907** module **101** could connect with wireless network **102** using a key K and network module identity **110***b* that are not valid, and/or not authenticated by a wireless network **102** or mobile network operator **108**. This feature to support emergency calls/emergency services without a valid SIM card or UICC (or a valid or activated SIM/UICC with authenticated network access credentials) is also mandated by regulatory authorities in different countries, such as the Federal Communication Commission (FCC) in the US.

Consequently for this alternative embodiment contemplated for a step **907** in FIG. **9***b* but not illustrated in FIG. **9***b*, module **101** in a step **907** illustrated in FIG. **9***b* could attach to a wireless network **102**, where the module **101** and the network **102** use a null or invalid values for key K and/or network module identity **110***b* at a step **907**. Module **101** at a step **907** could identify itself to wireless network **102** using either (i) a module identity **110** recorded in a non-volatile memory or (ii) a network module identity **110***b* recorded in a received eUICC profile **311**, and other possibilities for the identity of module **101** in a step **907** when attaching to a wireless network **102** in an unauthenticated manner are possible as well for a step **907** without departing from the scope of the present invention. In this alternative exemplary embodiment for a step **907** (as one alternative to the step **907** depicted in FIG. **9***b*), a module **101** at a step **907** could complete an attachment procedure as outlined in 3GPP specification TS 24.301 v12 without successfully completing an authentication procedure using a shared secret network K key or an initial key K **325** recorded in a received eUICC profile **311**. In other words, the initial key K **325** for a step **907** does not have to be a valid, acceptable, and/or authenticated key K in order to use the steps illustrated in FIG. **9***b*, although in some embodiments of the present invention the initial key K **325** can be a proper and authenticated key K for wireless network **102**. The initial key K **325** used in a step **907** could also comprise a "null" value, and a "null" value for a key K is contemplated in LTE and related wireless network standards (in order to support mandated emergency services for module network operator **108**).

After connecting with wireless network **107** in a step **907**, at a step **908**, module **101** can send wireless network **102** a key K module token **1103**, where a key K module token **1103** is depicted and described in connection with FIG. **11** below. The key K module token **1103** could be calculated or processed by module **101** in a step **316**, although the key K module token **1103** could be derived at other times or steps as well. A message or packet sent from a module **101** to a server **105** associated with network **102** in a step **908** can also include any of (i) a module identity **110**, (ii) an encrypted module identity **110***a*, and/or (iii) a network module identity **110***b*. A key K module token **1103** in a step **907** can comprise any of (i) a derived module public key **111**, where the derived module public key **111** could be calculated in a step **906** above, (ii) a value processed by a module **101** for a Diffie Hellman key exchange, (iii) an algorithm token **190** for a shared secret algorithm **141***g*, and/or (iv) a number or string for a server **105** to use in a network key K derivation algorithm **1101** in order for mobile network operator **108** to derive a secret shared network key K **129***d*. In an exemplary embodiment, module **101** can send the key K module token **1103** to a server **105** such as, but not limited to, a home subscriber server (HSS) using a step **522** at a step **908**.

At a step **908**, module **101** can send a message **208** with a key K module token **1103** and authenticate data associated within the message, such as, but not limited to, a module identity **110**. However, a separate authentication of a message with key K module token **1103** using a step **522** may optionally be omitted (thus depicting "908 And/Or **522**" in FIG. **9***b*), for embodiments where module **101** uses a valid, authenticated initial key K **325** for a step **907** above. In the embodiment described in the previous sentence, the steps for "And/Or **522**" depicted in FIG. **9***b* may be omitted, and thus the optional additional steps for **522** could be omitted with a step **908** for a FIG. **9***b*. In other words, when module **101** uses a valid, authenticated initial key K **325** for a step **907**, module **101** can send key K module token **1103** in a step **908**, and separate, additional steps for authenticating the key K module token **1103** may not be required.

For other embodiments where module **101** connects with wireless network **102** using an invalid, unauthenticated, or "null" initial key K **325** (such as attaching in a manner for supporting emergency services but not regular subscriber service as described at Step **907**), the steps for "And/Or **522**" depicted in FIG. **9***b* can be included, in order for a mobile network operator **108** to receive the key k module token **1103** in a secure manner. A module **101** sending the key K module token **1103** at a step **908** and **522** in FIG. **9***b* could authenticate the message, or data associated with the mes-

sage, in a step **908** using a step **522**. In exemplary embodiments, module **101** can attach to the wireless network **102** without successfully completing authentication (such as the data-link and network layer of the OSI stack not being authenticated), and send a message **208** with key K module token **1103** in a step **908** with a step **522** in FIG. **9***b*. The message **208** with key K module token **1102** could be authenticated by a server **105** using a shared secret key **510**, as depicted and described in connection with a step **517** of FIG. **5***b*. In this manner, module **101** could use an eUICC **163** with a received eUICC profile **311** that contains both an initial key K **325** and a shared secret key **510**. The initial key K **325** may not be valid and/or authenticated (or could comprise a "null" value). Module **101** could attach to the wireless network **102** in a manner that supports emergency services. Module **101** could send the key K module token **1103**, and authenticate data associated with key K module token **1103** using a step **517** and the shared secret key **510**. Note that the same value or number could be used for both initial key K **325** and shared secret key **510**, although the values or numbers for the two keys could also be different.

In another embodiment for FIG. **9***b*, a valid initial key K **325** can be utilized to authenticate a module **101** with a wireless network **102**, where initial key K **325** comprises a pre-shared secret key K contemplated in 3GPP TS 33.401 V12.9.0 and used in a step **907**. A separate shared secret key **510** can be used for authentication of application data such as sending key K module token **1103** in a message **208** to a server **105** in a step **908** with a step **522**, where the authentication could use (i) a step **517** in step **522** and (ii) the shared secret key **510**.

In exemplary embodiments, shared secret key **510** can be used by both module **101** and a mobile network operator **108** in a step **908** with a step **522** in order to verify and authenticate that a key K module token **1103** (or related data such as a module identity **110** and/or a network module identity **110***b*) is properly authenticated at a step **908** using a step **522**, such that imposters or fraudulent submissions of key K module token **1103** could be reasonably be prevented or excluded from using a step **908**. As noted above, the use of a step **522** with a shared secret key **510** can be optionally omitted, and the submission or sending of key K module token **1103** could be secured by using a valid, authenticated initial key K **325**. Other possibilities for a module **101** to send a key K module token **1103** to a server **105** associated with a mobile network operator **108** are possible as well without departing from the scope of the present invention. Although not illustrated in FIG. **9***b*, after sending the module key K token **1103** in a step **908**, module **101** can detach from the wireless network **102**. A subsequent re-attachment of module **101** at later steps, such as step **909** below, could utilize a different key K than the initial key K **325** used in a step **907**, such as module **101** using the derived shared secret network key K **129***c* in a second attachment and connection procedure with the same wireless network **102**.

At a step **909**, a module **101** can derive a shared secret network key K **129***d* using the derived module private key **112** and a key derivation function **141***f*. The key derivation function **141***f* could use a Diffie-Hellman key exchange plus a set of cryptographic parameters **126** with the derived module private key **112** in order to derive the shared secret key K **129***d*. A key derivation function **141***f* could also use alternative algorithms to Diffie-Hellman, such as, but not limited to, ECDH **159**, ANSI-X.9.63 160, or similar key exchange protocols, such that a module **101** could use the derived module private key **112** from a step **316** in order to derive a secret shared network key K **129***d* that is also shared with a wireless network **102**. As contemplated herein, a step **909** can also comprise a module key K derivation algorithm **909**, and a module key K derivation algorithm **909** is depicted and described below in FIG. **11**. As depicted in FIG. **11**, a step **909** comprising a module key K derivation algorithm **909** could also use input of a network key K token **1102**. A key K network token **1102** for a step **909** can comprise any of (i) a network public key **165***b*, (ii) a value from MNO **108** for a Diffie Hellman key exchange, (iii) a server public key **114**, and/or (iv) a number or string for a module **101** to use in a module key K derivation algorithm **909** in order for module **101** to derive a secret shared network key K **129***d*. The key K network token **1102** could be recorded in a received eUICC profile **311** or received by module **101** in a response **209** (not shown in FIG. **9***b*) prior to step **909**.

The output of a key derivation function **141***f* in a step **909** (also depicted and described in connection with FIG. **11** below), using input at least in part of (i) the module private key **112**, (ii) a set of cryptographic parameters **126** or **126***a*, and (iii) the key K network token **1102**, could comprise a derived shared secret key **129***b* that is different than shared secret network key K **129***d*. As one example, the derived shared secret key **129***b* could have a different number of bits for derived shared secret key **129***b* than the 128 bit long key length for shared secret key K compatible with ETSI standards for LTE networks in 2013. In this exemplary case, a module **101** and a server **105** could perform additional key processing **141***i* to convert (A) a derived shared secret key **129***b* output by a key derivation function **141***f* in a step **909** into (B) a mutually derived shared secret network key K **129***d*.

The function of a shared secret network key K **129***d* (in the form of a key "K") is described in 3GPP TS 33.401 V12.9.0 and related standards, where shared secret key K is used to derive session keys such as a session cipher key (CK) and a session integrity key (IK) as described in ETSI and 3GPP standards. Conventional technology for the use of a shared secret key K contemplates that shared secret key K comprises a pre-shared secret key K recorded in (i) physical media such as a SIM or (ii) transferred electronic media such as an eUICC profile that would be delivered to a module **101** with an eUICC **163**. In exemplary embodiments of the present invention, the shared secret network key K **129***d* is internally derived by a module **101** using (i) the derived module private key **112** from a step **316** and (ii) a step **909**, which could also comprise the use of a module key K derivation algorithm **909**. In this manner, module **101** can process or obtain the shared secret network key K **129***d* without having the shared secret network key K **129***d* pass through 3rd parties (even in an encrypted electronic form), and thereby increase the security, convenience, and flexibility of a system **100** and other systems contemplated herein that utilize an eUICC **163** for a module **101** to connect with a wireless network **102**. As depicted and described in connection with FIG. **11** below, concurrent with step **909** a wireless network **102** or a mobile network operator **108** could also derive the same shared secret network key K **129***d* using a network key K derivation algorithm **1101**. After mutual derivation of the same shared secret network key K **129***d*, module **101** and wireless network **102** can initiate regular communications on legacy and widely deployed wireless networks **102**. Establishing regular communications with the widely deployed wireless networks **102** includes the derivation of subsequent session keys, after mutually obtaining a secure shared secret network key K

129*d*. Additional details for a step **909** are depicted and described in connection with FIG. **11** below.

At step **910**, after deriving shared secret network key K **129***d* from a step **909**, where shared secret network key K **129***d* can also be derived by a mobile network operator **108**, module **101** can use an eUICC **163** to reconnect with the wireless network **102** associated with the activated eUICC profile **313**. The activated eUICC profile **313** could be obtained in a step **316** above. Module **101** can send the network module identity **110***b* to the wireless network **102**, where the network module identity **110***b* can be recorded in the activated eUICC profile **313**. Module **101** can use the derived shared secret network key K **129***d* from a step **909** to authenticate with wireless network **102** and/or mobile network operator **109** in a step **910**, where the derived shared secret network key K **129***d* is different than the initial key K **325** used in a step **907** for a prior authentication with wireless network **102**.

This exemplary change in a key K used with wireless network **102** in FIG. **9***b* illustrates several important differences with conventional technology. First, the module **101** can use two different key Ks (comprising shared secret network key K **129***d* and initial key K **325**) with the same wireless network **102** without physically changing a SIM or UICC. Second, module **101** can use an eUICC **163** and steps in FIG. **9***b* with same activated eUICC profile **313** and two different key Ks in order to communicate with wireless network **102**. Using conventional technology as of 2013, a change for a key K is not contemplated for the same activated eUICC profile **313** or a physical UICC. Further, conventional technology for an eUICC **163** does not contemplate that module **101** could derive a key K (in the form of a shared secret network key K **129***d* described herein) for use with an eUICC **163** that also can be mutually shared with MNO **108**, without requiring the electronic distribution of key K, even in an encrypted or ciphered form.

Continuing at step **910**, wireless network **102** and/or mobile operator network **108** can use ETSI standards for PLMN networks, including LTE and LTE advanced networks and standards such as 3GPP TS 24.301v10+, in order to authenticate, module **101** in a step **910**. Upon reconnecting to wireless network **102**, module **101** can receive a random number in the form of a RAND **912** from the wireless network **102**. The algorithm for authentication of module **101** with the wireless network **102** can comprise a form of message digest authentication. Module **101** can input the received RAND **912** and derived shared secret network key K **129***d* into a set of cryptographic algorithms **141** in order to obtain the response RES **913**. An exemplary calculation of a RES **913** using a key K and RAND **912** is described in ETSI standard TR 131 900 v.10.0.0 and related documents. For exemplary embodiments that utilize FIG. **9***b*, the set of cryptographic algorithms **141** for processing the response RES **913** can operate within an eUICC **163** within module **101**.

Continuing with a step **910**, as specified in ETSI/3GPP standards, the RAND **912** and an internally recorded key K (which could be the derived shared secret network key K **129***d* for a step **910** in the present invention) can also be subsequently used with a set of cryptographic algorithms **141** for the derivation of additional keys such as, but not limited to, a cipher key (CK) and an integrity key (IK) (described in a step **911** below). Exemplary embodiments of the present invention can utilize the derived secret shared network key K **129***d* instead of the key K recorded in a SIM or UICC in order to perform the same operations to derive CK, IK and related keys, thereby maintaining secure compatibility with the significant installed infrastructure in PLMN networks for supporting the use of key K in SIM/UICC cards for mobile phones in 2013 and future networks using a key K. Upon conclusion of a step **910**, module **101** can send the response RES **913** to the wireless network **102** in order to authenticate. Wireless network **102** or MNO **108** could calculate the same RES **913** for the same RAND **912** using the shared secret network key K **129***d* mutually derived by wireless network **102** or MNO **108** (possibly using a network key K derivation algorithm **1101** illustrated in FIG. **11** below), and thereby compare the RES **913** received from module **101** in a step **910** with the RES **913** internally calculated by MNO **108** using the same set of cryptographic algorithms **141** as module **101**. Module **101** could be authenticated with network **102** using the network module identity **110***b* in the case the two RES **913** values match for network **102** (i.e. the received RES **913** matches the internally calculated RES **913**).

After the internal, secure derivation of a shared secret network key K **129***d* in a step **909** and the authentication of module **101** with a wireless network **102** in a step **910**, at a step **911** module **101** can begin the process of generating additional keys in order to securely transmit and receive application data with or through a wireless network **102**. At step **911**, module **101** can derive a cipher key (CK) **914** by inputting into a set of cryptographic algorithms **141** both RAND **912** and the derived shared secret network key K **129***d*. The RAND **912** and the derived shared secret network key K **129***d* could also be input into a key derivation function **141***f* within a set of cryptographic algorithms **141**. An output of a key derivation function **141***f* in a step **911** can be CK **914**, which could comprise a session key. The key derivation function **141***f* in a step **911** can utilize relevant algorithms for generating CK **914** specified in ETSI, 3GPP, or similar standards for wireless networks, including WiMAX, such that module **101** can independently derive the same value for CK **914** at wireless network **102**. CK **914** can subsequently be used with or for further deriving a symmetric key **127** with a symmetric ciphering algorithm **141***b* for encrypting data transmitted or sent to wireless network **102** by module **101** and decrypting data received. As one example, CK **914** could be used to derive a key Kupenc, where Kupenc is used to cipher data transmitted by a module **101** from a radio **101***z* to a base station **103**.

Although not illustrated in FIG. **9***b*, both module **101** and a wireless network **102** could derive several additional secret keys using the derived and mutually shared secret network key K **129***d*, and the additional keys could comprise values for an integrity key (IK), Kasme, Knasenc, Knasint, Kenb, and/or Kupenc. In this manner, and as illustrated in FIG. **9***b*, the derivation of a module private key **112** can be used for the derivation of a shared secret network key K **129***d*, and shared secret network key K **129***d* can be the basis for secure communications between a module **101** and a mobile network **102**, while keeping compatibility with existing and future standards for both mobile phones and deployed wireless networks **102**.

FIG. **10**

FIG. **10** is a simplified message flow diagram illustrating an exemplary system with exemplary data transferred between a module and a set of servers, in accordance with exemplary embodiments. System **1000** may comprise a module **101** and a set of servers **1010**, where the set of servers **1010** can include a plurality of servers **105** and a shared module database **105***k*. FIG. **10** illustrates module **101** communicating with a server **105**, depicted as "server A" **105**, although a module **101** could communicate with

other servers within a set of servers **1010** as well. The set of servers **1010** could be associated with a mobile network operator **108** and the set of servers **1010** could operate in a coordinated manner through a network. In exemplary embodiments where a module **101** and a wireless network **102** mutually derive a shared secret network key K **129***d*, then the set of servers **1010** illustrated in FIG. **10** could be (i) operated by a mobile network operator **108** and also be (ii) associated with a home subscriber server (HSS). Although not illustrated in FIG. **10**, module **101** could access a wireless network **102** and the IP Network **107** illustrated in FIG. **1***a* in order to send data to and receive data from a server **105** within a set of servers **1010**.

As illustrated in FIG. **10**, a module **101** can communicate with a server **105** using the steps and datagrams illustrated in other figures, including sending a message **208**, receiving a response **209**, using steps **711**, **607**, **709**, and/or **710** as depicted and described in connection with FIG. **7**, and/or steps **316** and **516** from FIG. **5***b*. FIG. **10** illustrates some of many potential combinations of using these individual steps for an efficient and secure system. Other messages **208** may potentially flow before and/or after a "first message" **208**. This terminology of "first message", "second response", "second public key", etc. contemplated in various Figures herein may refer to the "first message", "second response", "second public key", "first set of parameters", etc. described in the illustrated flows within each Figure. Other messages, responses, keys, and parameters may be communicated before and/or after a depicted "first message", "second response", "second public key", etc. The depicted elements for Figures herein can comprise subsets of all messages, responses, keys, etc. that may also flow, and the subsets can depict various embodiments contemplated herein.

In exemplary embodiments, FIG. **10** illustrates the establishment of secure communication between a module **101** and a set of servers **1010** for the case where (i) an existing, authenticated module public key **111** is available from external servers, and (ii) the existing module public key **111** can be used to send parameters for the module **101** to derive a new module PM key pair. As one example, the optional step **711**, before a step **1001**, could be used to authoritatively record a module public key **111** with external servers such as those external servers shown in a step **1002** in FIG. **10**. The optional step **711** could include module **101** recording an initial module public key **111***b* that is not derived by module **101**, but rather loaded into module **101** by a manufacturer, distributor, or end user, and the initial module public key **111***b* could be used by a module **101** and a server **105** to authenticate and/or encrypted subsequent communications related to a derived module public key **111**. After the derived module public key **111** has been successfully authenticated or recorded by a server **105** or a set of servers **1010**, then a server **105** or set of servers **1010** can begin using the derived module public key **111** for subsequent authentication and/or encryption for communication with a module **101**, instead of continuing to use the initial module public key **111***b*.

In exemplary embodiments, (i) an initial module private key **112***b* could be recorded in a nonvolatile memory for module **101** prior to a step **1001** illustrated in FIG. **10**, possibly using a step **711**, and (ii) a set of servers **1010** could use an initial module public key **111***b* associated with the initial module private key **112***b* in order to establish initial secure communications with a module **101** such as using a step **1004** to transfer a symmetric key **127** for ciphering a new, second set of cryptographic parameters **126**, and then (iii) a module **101** could receive the ciphered second set of cryptographic parameters **126** with subsequent exemplary steps illustrated in FIG. **10** to derive additional module PM keys, and (iv) establish secure communication with a set of servers **1010** using the second set of cryptographic parameters **126** and the derived module PM keys.

In an embodiment where module **101** records a "base" certificate **122** (with a corresponding "base" module private key **112**) which are included with a module **101** by a manufacturer. A mobile network operator **108** can use the "base" certificate **122** to communicate further sets of cryptographic parameters **126** for deriving additional module PM keys. The initial set of cryptographic parameters **126** and an initial module public key **111***b* could be recorded in the "base" certificate **122**, and the exemplary use of cryptographic parameters **126** in a certificate **122** is illustrated in FIG. **1***j*. The initial set of cryptographic parameters **126** could also be referred to as a "base" set of cryptographic parameters **126**. The module manufacturer, module provider **109**, mobile network operator **108**, and/or wireless network **102** could agree on a common initial set of cryptographic parameters **126** (such as, but not limited to, agreeing that initial module PM keys could be based on RSA and a length of 2048 bits). By agreeing to a common initial set of cryptographic parameters **126**, different modules **101** from different manufactures could initially interoperate with different module providers **109** and/or M2M service providers **108** using the initial, "base" parameters. The entities such as the mobile network operator **108** and/or wireless network **102** could use the "base" or initial set of cryptographic parameters **126** with the "base" certificate **122** to establish secure communications where subsequent, different sets of cryptographic parameters **126** for deriving new module PM keys could be securely communicated and/or negotiated.

A first optional step **711** can comprise series of sub-steps comprising a step **702**, **703**, and **704** as depicted and described in connection with FIG. **7**. Note that the use of an optional step **711** can be omitted, and other preliminary steps and communications could take place between a module **101** and a set of servers **1010** before a module **101** performs a step **1001**. In another exemplary embodiment, a module **101** may have used the data from a step **711** in communicating with a different set of servers (not shown) than the set of servers **1010** illustrated in FIG. **10**, and the set of servers **1010** illustrated in FIG. **10** may not have access to data from the different set of servers (not shown). The sub-steps for a step **711** can include a module distribution and installation step **702**. As contemplated herein, the term "installation" can also refer to a subset of steps conducted by an end user or technician for activation, such that a module **101** performs initial steps to become operable upon completion of the "installation" or activation. In one embodiment, module **101** can comprise a mobile phone such as a smartphone and in this case "installation" in a step **702** within a step **711** can comprise an end user powers up the mobile phone or smartphone for an initial time. Also, in an exemplary embodiment where the optional step **711** is omitted, no data flows between a module **101** and a set of servers **1010** until the first message **208** at a step **1001** illustrated in FIG. **10**.

After a sub-step **702** in an optional step **711** in FIG. **10**, the next sub-step can comprise a sub-step **703** as depicted and described in FIG. **7**. In this sub-step **703**, a module **101** can record in nonvolatile memory a shared secret key **129**, a first set of cryptographic parameters **126**, and a server address **207**. As discussed above, a server address **207** could comprise a server name **206** in a step **703**, which could subsequently be resolved via DNS into an IP address **106** for a server **106** (or a plurality of IP addresses **106** for a set of servers **1010**). The use of a shared secret key **129** for a step

703 is depicted and described in connection with FIG. 7. Note that for the purposes of the present invention contemplated herein, a shared secret key can comprise any of a pre-shared secret key 129*a*, a derived shared secret key 129*b*, or a shared secret key 129*c* processed using a shared secret algorithm 141*g*. In addition, and as described in a step 703 in FIG. 7, in an exemplary embodiment a shared secret key 129 can comprise the combination of an initial module private key 112*b* and an initial module public key 111*b*, and the use of the two initial keys can comprises a shared secret key 129 for a sub-step 703 in an optional step 711 in FIG. 10. Also as described in FIG. 7, a sub-step 703 could take place concurrently with a sub-step 702 or possibly concurrently with a sub-step 701, such as during manufacturing or before a module 101 leaves a manufacturing facility.

After a sub-step 703 in an optional step 711 in FIG. 10, the next sub-step can comprise a sub-step 704 as depicted and described in FIG. 7. In this sub-step 704, a module 101 can conduct a 2-way authentication with a set of servers 105 using the shared secret key 129. Upon mutual authentication, a module 101 can record a second set of cryptographic parameters 126. The second set of cryptographic parameters 126 could comprise a subset of cryptographic parameters 126*a* as illustrated in FIG. 1*i*. Or, the second set of cryptographic parameters 126 could be equal to the first set of cryptographic parameters 126 from a sub-step 703. The details for a module 101 to perform a mutual authentication using shared secret key 129 and receiving a second set of cryptographic parameters 126 are depicted and described in connection with step 704 in FIG. 7. In this manner, by using an optional step 711 before a step 1001, module 101 and a server 105 can be mutually authenticated before a step 1001.

At a step 1001 of FIG. 10, a module 101 can send a first message 208, where the first message 208 can include a module identity 110 and a first public key identity 111*a*. As received by a server 105 within a set of servers 1010, the first message 208 in a step 1001 could include a first source IP:port number equal to IP address 210 and source port number 605. As sent by module 101, the first message 208 in a step 1001 could include a first source IP:port number equal to IP:port number 204. Although firewall 104 is illustrated in FIG. 10 as operating as a "NAT Firewall", a firewall 104 in a system 1000 could also operate as a symmetric firewall without NAT functionality and in this case the first message 208 in a step 1001 as received by a set of servers 1010 could include a source IP:port number equal to IP:port 204. Note that module identity 110 in a step 1001 could be in the form of an encrypted module identity 110*a*, and a module 101 could use a secret ciphering algorithm 141*h* to convert the module identity 110 into an encrypted module identity 110*a* using a secret ciphering algorithm ciphering 162. If a first message 208 in a step 1001 includes an encrypted module identity 110*a*, then the first message 208 in a step 1001 could also optionally include an algorithm token 190. In an exemplary embodiment, within a system 1000 where a module 101 optionally used a step 711 before a step 1001, many messages could have previously flowed between module 101 and a set of servers 1010 before the first message 208 in a step 1001.

At a step 1002, a set of servers 1010 can use the module identity 110 and/or module public key identity 111*a* in order to query other servers such as a server associated with a certificate authority 118, a module provider 109, or an eUICC subscription manager 164 in order to receive a first module public key 111 or certificate 122 for the module identity 110 and/or module public key identity 111*a*. Note than in an exemplary preferred embodiment, module 101 may use a plurality of module public keys 111 and/or certificates within a relatively short period of time (such as, but not limited to, using more than one module public key 111 within the same month). Different exemplary multiple module public keys 111 used concurrently by a module 101 are described elsewhere herein. In this embodiment where module 101 uses multiple module public keys 111 and/or certificates 122 in a relatively short period of time, the module public key identity 111*a* can serve as a useful index or pointer to a particular module public key 111 that a module 101 prefers to utilize with a set of servers 1010.

In an exemplary embodiment for a step 1002, a module 101 could also optionally send the relevant module public key 111 in a step 1001, but a step 1002 may be conducted by a set of servers 1010 in order to verify, query, or obtain the module public key 111 and/or certificate 122 from other servers. For example, if a module 101 had not previously conducted the optional step 711 in a FIG. 10, and no authoritative information is available about a module 101 to a set of servers 1010 (such as not having a shared secret key 129 available in the case where a step 711 was omitted), then a set of servers 1010 may preferably use the information in a message 208 received in a step 1001 to query the other servers illustrated in FIG. 10 (i.e. servers for 118, 109, or 164) in a step 1002 in order to obtain verification of the module identity 110 and/or a module public key 111 received in a step 1001, including obtaining a certificate 122.

In an embodiment where module 101 sends the module public key 111 in a step 1001, the module 101 preferably includes the module identity 111*a*. Module 101 could also send a certificate 122 in a step 1001, but the set of servers 1010 can independently query other servers for the certificate 122 or module public key 111 (query using the module identity 110 or module public key identity 111*a* from a step 1001). The query to other servers can be used to independently and separately receive the module public key 111, in order for a set of servers 1010 verify or compare that a received module public key 111, which could comprise an initial module public key 111*b* loaded by a manufacturer, matches the module public key 111, possibly in the form of a certificate 122, received from an independent and authoritative third party.

In an exemplary embodiments for a step 1002, a set of servers 1010 can also query other servers such as a certificate authority 118, an mobile network operator 108, an eUICC subscription manager 164, and/or a shared module database 105*k* in order to receive a first set of cryptographic parameters 126. A set of cryptographic parameters 126 is depicted and described in connection with FIG. 1*d*, FIG. 1*i*, and FIG. 7, and elsewhere herein. The first set of cryptographic parameters 126 in a step 1002 could comprise the parameters 126*a* within a certificate 122 illustrated in a FIG. 1*j*. Within a step 1002 a set of servers 1010 could receive a certificate 122 for a module 101 with the module identity 110 from another server illustrated, where the certificate 122 could include (i) the module public key 111, (ii) the module identity 110, (iii) a module public key identity 111*a*, and (iv) a signature 123 from a certificate authority 118. Within a step 1002, a set of servers 1010 could also verify a chain of signatures 123 within a certificate 122 for a module 101. A set of servers 1010 could use a different IP:port number than IP:port 207 to query external servers for information pertaining to a first module public key 111 and a first set of cryptographic parameters 126.

After a step 1002, at a step 1003 a set of servers 1010 could send a module 101 a response 209. In an exemplary embodiment, the response 209 can include a server digital

signature **506**, where module **101** can verify the server digital signature **506** using the server public key **114**. In this manner, module **101** can authenticate the server identity **206** and verify or confirm that the module **101** is communicating with a correct server **105** (such as not receiving data from an imposter or a "man in the middle" attack). The server **105** preferably sends the response **209** to the source IP:port received in the first message **208** in step **1001**. Note that for embodiments which utilize an eUICC **163** and the mutual derivation of a secret shared network key K **129***d*, then the server digital signature **506** in a step **1003** could comprise a an authorization number "AUTN" associated with a RAND **912** depicted and described in connection with FIG. **9***b*. Server digital signature **506** could be optionally omitted in a step **1003** in embodiments where module **101** performs a step **711** before a step **1001**, as illustrated in FIG. **10**.

At a step **1004**, a symmetric key **127** could be sent either from (i) a set of servers **1010** or (ii) a module **101** using an asymmetric ciphering algorithm **141***a* and either (i) the module public key **111** from a step **1002** or (ii) the server public key **114**, respectively. Values for using an asymmetric ciphering algorithm **141***a* could be specified from the first set of cryptographic parameters **126** at either a step **1002** or a step **1001**. The set of servers **1010** could record the symmetric key **127** from a step **1004** in a shared module database **105***k*, such that different servers **105** within a set of servers **1010** could use the symmetric key **127** in communication with the module **101**. An exemplary datagram **601***a* that includes a symmetric key **127** within an encrypted data that uses asymmetric ciphering **141***a* is illustrated in element **701***a* of FIG. 7 of U.S. patent application Ser. No. 14/039,401, filed Sep. 27, 2013 in the name of John Nix, which is hereby incorporated by reference in its entirety. Note that for embodiments which utilize an eUICC **163** and the mutual derivation of a secret shared network key K **129***d*, then the use of asymmetric ciphering for communicating a symmetric key **127** in a step **1004** may be optionally omitted, and each side (i.e. module **101** and a set of servers **1010** associated with a wireless network **102**) could mutually derive the secret shared network key K **129***d* instead of sending or receiving a symmetric key **127** across a network.

At a step **1005**, a set of servers **1010** could record that the use of a second set of cryptographic parameters **126** for a module **101** may be preferred. A step **1005** could take place earlier in the sequence of message flow illustrated in FIG. **10**, such as even before a step **1001**. An example of the case in the previous sentence could be where a set of servers **1010** needs to initially communicate with a module **101** using a "base" set of cryptographic parameters **126** with an initial module public key **111***b*, and after initial secure communication is established, then the set of servers **1010** could use a different set of cryptographic parameters **126** and request that the module **101** derive a new set of module PM keys using the different set of cryptographic parameters **126**. In another embodiment, a relatively long period of time such as several years could transpire between a step **1004** and a step **1005** (with many additional messages not shown in a FIG. **10** communicated between a module **101** and a server **105** in the time between a step **1004** and a step **1005**). Over time and for various commercial and security needs, a preferred set of cryptographic parameters **126** can change, such as the use of longer key lengths, or adoption of new asymmetric ciphering algorithms **141***a*, including the use of new ECC curves. Consequently, in a step **1005**, a set of servers **1010** could record a second set of cryptographic parameters **126**.

At a step **607** in FIG. **10**, a module **101** could receive the second set of cryptographic parameters **126** from the set of servers **1010**. Although not illustrated in FIG. **10**, a module **101** preferably sends a message **208** with the module identity **110** to the set of servers **1010** after a step **1004** and before a step **607**, with the result that firewall **104** ports will be temporarily opened and bound so that a server **105** in a set of servers **1010** can send a response **209** back to the module **101**. A step **607** with a response **209** is also depicted and described in connection with FIG. **6** and FIG. **7**. The terminology depicted for a response **209** at a step **607** of "**209**:**504**: . . . " can refer from left to right as the structure for an exemplary response **209** illustrated in FIG. **6**, where the response **209** can include server encrypted data **504**, and the server encrypted data can include either (i) a second set of cryptographic parameters **126**, or (ii) a eUICC profile **311**. The second set of cryptographic parameters **126** in a response **209** can be included in a server encrypted data **504**. In this manner, the second set of cryptographic parameters **126** can remain confidential and reasonably securely received by a module **101**.

Note that the symmetric key **127**, or session key, used to cipher the second set of cryptographic parameters **126** in a step **607** in FIG. **10** could be communicated in a step **1004** above or a similar step using an asymmetric ciphering algorithm **141***a*. In an exemplary embodiment, the second set of cryptographic parameters **126** in a step **607** in FIG. **10** may not be encrypted and can also be sent as plaintext within a response **209**. In addition, the set of cryptographic parameters **126** in a step **607** in FIG. may be communicated in the form of a reference to a set of cryptographic parameters **126** from the use of a set of cryptographic parameters token **126***c* (and thus a name or identity of the set of parameters **126** could be communicated instead of the full set of cryptographic parameters **126**). As contemplated herein, for any reference to a set of cryptographic parameters **126** in FIG. **5***b* through FIG. **10**, the use of a set of cryptographic parameters token **126***c* can be substituted for communicating a complete list of cryptographic parameters **126**.

For embodiments where a module **101** uses an eUICC **163**, a step **607** illustrated in FIG. **10** could comprise module **101** receiving a received eUICC profile **311**, which could also contain the second set of cryptographic parameters **126**. The inclusion of a received eUICC profile **311** within a step **607** is also described for a step **607** in connection with FIG. **7**. The received eUICC profile **311** could be included in a server encrypted data **504**, and the server encrypted data **504** could be ciphered using a symmetric key **127** communicated in a step **1004**. Or, the server encrypted data **504** for a step **607** could be ciphered with a different symmetric key **127**. The set of servers **1010** could obtain the received eUICC profile **311** from an eUICC subscription manager **164**. Note that a response **209** which includes a received eUICC profile **311** in a step **607** in FIG. **10** can utilize a source IP:port number **207** that is different than a source IP:port number **207** in a response **209** in a step **1003** above. In other words, as contemplated herein, the numeric value for an IP:port number **207** can change over time, but a pair of datagrams comprising a message **208** and an resulting response **209** can utilize the same numeric value for an IP:port number **207**.

At step **1006**, a module **101** can send a subset of cryptographic parameters **126***a*, where the subset of cryptographic parameters **126***a* can be a subset of the cryptographic parameters **126** received in a step **607**. FIG. **1***i* above illustrates an exemplary "handshake" or "negotiation" of a set of cryptographic parameters **126** between a server **105** and a module **101**, and the data illustrated in FIG. **1***i* can apply to step **607** and step **1006** in FIG. **10**. Alternatively, the subset of cryptographic parameters **126***a* could be omitted,

and the set of cryptographic parameters **126** received by a module **101** in a step **607** could be specific enough that module **101** does not need to select any options within the set of cryptographic parameters **126**. In this case (where a step **1006** is optionally omitted), then a set of cryptographic parameters **126** in a step **607** could also comprise a subset of cryptographic parameters **126***a*. In addition, the terminology depicted for a message **208** at a step **1006** of "**208**:**110**:**403**: with Subset 2nd Parameters **126***a*" can refer from left to right as the structure for an exemplary message **208** illustrated in FIG. **6**, with a message **208** containing a module identity **110** and a module encrypted data **403**, where "Subset 2nd Parameters **126***a*" would be inside the module encrypted data **403**.

Other data such as, but not limited to, source and destination IP:ports, a datagram packet header, and a checksum **603**, plus optional channel coding **406** could be included in a packet comprising a message **208** sent by module **101** at a step **1006** and other messages **208** illustrated in FIG. **10**. In an exemplary embodiment, the second subset of cryptographic parameters **126***a* in a step **1006** in FIG. **10** may not be encrypted and can also be sent as plaintext within a message **208**. In general, where the use of encrypted data in the form of a module encrypted data **403** or server encrypted data **504** is illustrated in various Figures, including FIG. **10**, the present invention contemplates that encryption may also be optionally omitted at the network layer and application layer and the data can be communicated as plaintext in these layers (but encryption could be performed at the data-link layer, such as ciphering data over a public wireless network **102**). In an exemplary embodiment, module **101** can also use forward error correction at a step **1006**, or other steps illustrated in FIG. **10** and related Figures where a module **101** sends data, such that a module **101** can send multiple copies of the same or equivalent datagram comprising a message **208** in order to increase the probability that a server **105** or set of servers **1010** receives at least one datagram comprising a message **208**.

At a step **709** or a step **316** in FIG. **10**, a module **101** can derive a new module public key **111** and a new module private key **112** using the parameters **126** negotiated or communicated between steps **607** and **1006**. A step **316** in FIG. **10** can include the use of an eUICC **163** for module **101**, and a step **709** for FIG. **10** can include embodiments that do not depend on the presence of an eUICC **163**. The use of a step **709** is depicted and described in connection with FIG. **7** above. Although the text for a step **709** is depicted in FIG. **7** as "Module Derives 2nd Public Key **111** and 2nd Private Key **112** Pair, using 3rd Parameters **126**", in the context of FIG. **10**, the second key pair would be derived using the second set of parameters **126** negotiated between steps **607** and **1006**. In other words, the set of cryptographic parameters **126** used for a step **709** either in FIG. **7** or FIG. **10** can comprise the most recent set of cryptographic parameters communicated between a module **101** and a server **105**. The module **101** PM key pair resulting from a step **709** could comprise either a module PM key pair that uses either ECC algorithms **154** or RSA algorithm **153**. The key lengths and other parameters for a module **101** to process the module **101** PM key pairs can be specified in the set of cryptographic parameters **126** negotiated or communicated between steps **607** and **1006**.

At a step **709** in FIG. **10**, the module **101** could use a set of key pair generation algorithms **141***e* in a set of cryptographic algorithms **141***a* in order to derive a second module private key **112** and a corresponding second module public key **111**. The first module public key **111** can be previously used in a step **1002** and the first module private key **112** can be previously used in a step **1004**, although these first module **101** PM keys could also be used in communication that is not shown (i) after a step **1004** within FIG. **10** (such as the case where an extended period of time transpired between step **1004** and step **709** in FIG. **10**), and (ii) before a step **709** in FIG. **10**. A module **101** could determine that new module **101** PM keys are preferred or desirable for many reasons before or upon a step **709**, including the receipt of new cryptographic parameters **126** in a step **607**, the transfer of ownership or control of module **101**, the opening of an enclosure for a module **101** where the first module private key **112** could be compromised, the receipt of a module instruction **502** of "derive new keys", and other reasons exist as well.

In the embodiments where either (i) an eUICC **163** is used by a module **101** to record a derived module private key **112** and a derived module public key **111**, and/or (ii) module **101** and a wireless network **102** derive a shared secret key network key K **129***d*, a step **316** in FIG. **10** could comprise the activation of a received eUICC profile **311**, or similarly the derivation of a module PM key pair **315** for an activated eUICC profile **313**. The received eUICC profile **311** activated in a step **316** in FIG. **10** could be received by a module **101** in a step **607** above. At a step **316** in FIG. **10**, a module **101** could use a step **316** as depicted and described in connection with a step **316** in FIG. **9***b*, FIG. **7**, and FIG. **5***b*, and FIG. **3***b*. A module **101** could derive a new module private key **112** and a new module public key **111** at a step **316** using (i) a set of cryptographic algorithms **141**, (ii) a set of cryptographic parameters **126** or **126***a* (and the set of cryptographic parameters **126***a* could be recorded in a receiving eUICC profile **311** being activated in a step **316** in FIG. **10**), (iii) a key pair generation algorithm **141***e*, and (iv) a random number generator **128**. The derived module private key **112** and module public key **111** could be recorded in memory at a step **316** for further processing in additional subsequent steps.

At a step **710** within FIG. **10**, the module **101** can send a message **208** that includes the second module public key **111** derived at a step **709**. The terminology depicted for a message **208** at a step **710** of "**208**:**110**:**403**:2nd **111***a*:2nd **111**" can refer from left to right as the structure for an exemplary message **208** illustrated in FIG. **6**, with a message **208** containing a module identity **110** and a module encrypted data **403**, where the second module public key identity **111***a* and second module public key **111** could be inside the module encrypted data **403**. In exemplary embodiments, the module public key identity **111***a* could optionally be omitted in a step **710** and the data within a message **208** could also optionally be sent as plaintext. In the embodiment where module **101** sends a message **208** with the derived module public key **111** at a step **710** and also encrypts the module public key **111** in a module encrypted data **403**, the symmetric key **127** used with a symmetric ciphering algorithm **141***b* could be communicated between module **101** and a set of servers **1010** in a prior communication, such as, but not limited to, the transfers of a symmetric key **127** in a step **1004**. Also, although a single instance of the transfer of a symmetric key **127** in a step **1004** is illustrated in FIG. **10**, over time multiple different symmetric keys **127** could be communicated between a module **101** and a set of servers **1010** using a step **1004** or similar secure transfer, before module **101** sends the derived, second module public key **111** in a step **710**. In an exemplary embodiment, module **101** could use the most recent symmetric key **127** communicated between module **101** and a set of servers **1010** in order to

send a module encrypted data **403** with the derived, second module public key **111** at a step **710** in FIG. **10**.

As illustrated in FIG. **10**, a step **516** from FIG. **5***b* could also be utilized in FIG. **10** for a module **101** to send the second module public key **111** or a key K module token **1103**. In the embodiments where either (i) an eUICC **163** is used by a module **101** to record a derived module private key **112** and a derived module public key **111**, or (ii) module **101** and a wireless network **102** derive a shared secret key network key K **129***d*, a step **516** in FIG. **10** could comprise the module **101** sending a key K module token **1103** within a message **208**, where a key K module token **1103** is depicted and described in connection with FIG. **11** below. A key K module token **1103** could comprise the module public key **111** or could comprise other data for a wireless network **102** or MNO **108** to derive a secret shared network key K **129***d*, using a network key K derivation algorithm **1101** illustrated in FIG. **11**.

In an exemplary embodiment, the derived, second module public key **111** in a step **709** of FIG. **10** could be sent outside the module encrypted data **403** (such as plaintext) in a message **208** at a step **710**, but module encrypted data **403** could be used with the message **208** for either (i) sending other potentially sensitive data along with the module public key **111**, such as, but not limited to, cryptographic parameters **126**, or (ii) sending encrypted data using a symmetric key **127** such that a server **105** or set of servers **1010** could verify that module **101** has access to the symmetric key **127**. Thus, the module encrypted data **403** in a message **208** at a step **710** could be used to authenticate or verify that the module public key **111** received in a message **208** properly belongs to a module **101** with a module identity **110**. In other words, the proper processing of a module encrypted data **403** using a symmetric key **127** in a message **208** at step **710** can prevent imposters or the fraudulent submission of a module public key **111** in a step **710**.

Note that a step **710** as depicted and described in connection with FIG. **7** includes the authentication of the derived, second module public key **111**, and a step **710** in FIG. **10** can also include the steps for a module **101** to authoritatively send the derived, second module public key **111**. For the embodiment where a server **105** uses a first module public key **111** (possibly from a step **1002**) to authenticate a derived, second module public key **111** from a step **710**, a server **105** that did not previously have or record the first module public key **111** could use the module identity **110** query other servers such as, but not limited to, a shared module database **105***k*, a certificate authority **118**, or a mobile network operator **108** in order to obtain the first module public key **111** to authenticate or verify the derived, second module public key **112** received in a step **710**.

The module identity **110** in a message **208** at a step **710** could be sent as an encrypted module identity **110***a*, such that the module identity **110** is ciphered or obfuscated. A module **101** could use a secret ciphering algorithm ciphering **162** or other techniques such as a symmetric ciphering algorithm **141***b* in order to send the module identity **110** as an encrypted module identity **110***a*. For and embodiment where module **101** sends module identity **110** as an encrypted module identity **110***a* where the encrypted module identity **110***a* is ciphered using a symmetric ciphering algorithm **141***b*, a key such as a symmetric key **127** to encrypt the module identity **110** into an encrypted module identity **110***a* could be communicated at a prior step such as, but not limited to, a step **1004**. In general, the present invention contemplates that an encrypted module identity **110***a* can be used in place of a module identity **110** in Figures where a module **101** is depicted and described as sending a module identity **110**.

The message **208** in a step **710** in FIG. **10**, as received by a server **105** can include a second source IP:port **210**:**605** that is different than the first source IP:port in a message **208** at a step **1001**. The source IP:port **210**:**605** could change reasons including, but not limited to, (i) firewall **104** operating as a NAT firewall changes port bindings over time, (ii) the packets from module **101** to a set of servers **1010** route through different firewalls **104** over time, such as module **101** connecting to different networks **102** over time and a first network **102** is used by module **101** in a step **1001** and a second network **102** is used by a module **101** in a step **710**, and (iii) a module **101** could use a different source IP:port number **204** for a step **1001** and a step **710**. The present invention contemplates that module **101** can use a different source IP:port for sending the various messages **208** depicted and described in various Figures throughout the present invention (an correspondingly use the different IP:port numbers to receive various responses **209** to the message **208**). The IP address **202** for a module **101** to use in an IP:port number **204** can change over time, such as if a module **101** uses different networks **102** for sending messages **208** over time.

Although a message **208** at a step **710** in a FIG. **10** depicts a module **101** sending the message **208** at a step **710** to a server **105** within a set of servers **1010**, a module **101** can send the message **208** at a step **710** to a different server than the server **105** illustrated in FIG. **10**. In other words, according to exemplary embodiments, a module **101** can send any of the messages **208** depicted in various Figures to different servers **105** over time, and the different servers **105** could communicate with other servers **105** such that the multiple servers **105** operate in a coordinated manner using a network, and the multiple servers **105** could function as a set of servers **1010**. As one example, the first message **208** in a step **1001** could be sent to a first server **105**, and the message **208** in a step **710** could be sent to a second server **105**. The use of different servers **105** for a module **101** to send a message **208** could be identified by the use of a different destination IP address within the message **208**. Other possibilities exist as well for the use of multiple servers **105** in a set of servers **1010** without departing from the scope of the present invention.

At a step **1007**, after completing of a step **710** in FIG. **10**, a server **105** or set of servers **1010** can record the new, authenticated second module public key **111** with other servers illustrated. The data recorded by a server **105** could include the module identity **110**, a module public key identity **111***a*, and a second module public key **111**, plus an additional, optional subset of cryptographic parameters **126***a*. The data recorded by a server **105** in a step **1007** could be in the form of a certificate **122**. In this manner, the second module public key **111**, possibly in the form of a certificate **122**, can be made available to other servers **105** within a set of servers **1010** over time, and the other servers **105** could also use the subset of cryptographic parameters **126***a* in order to securely communicate with a module **101**. The use of a step **1007** could also result in the second module public key **111** (with associated data such as a certificate **122**, module identity **110**, module public key identity **111***a*, and a subset of cryptographic parameters **126***a* for the second module public key **111**) being made available to other servers outside of the set of servers **1010**, such as a server **105** belonging to a different MNO **108** than a MNO **108** operating the set of servers **1010**. Note that a step **1007** could

be optionally omitted, and a set of servers **1010** could record the second module public key **111** internally, and the second module public key **111** could also be kept confidential and not shared with other servers, thereby further increasing the security of a system **100** and other systems illustrated herein.

At a step **1008**, after sending a message **208** (which could comprise the message **208** in step **710** in FIG. **10**, or could comprise a different message **208** after a step **710** where the different message **208** after a step **710** is not illustrated in FIG. **10**), module **101** could receive a response **209** that includes a second symmetric key **127** that is ciphered using an asymmetric ciphering algorithm **141***a*. The response **209** in a step **1008** could include a server encrypted data **504**. The server encrypted data **504** in a response **209** for a step **1008** that includes a second symmetric key **127** could be ciphered using the derived, authenticated, second module public key **111** sent by module **101** in a step **710**. At a step **1008** the module **101** can decipher the server encrypted data **504** containing the second symmetric key **127** using the derived, second module private key **112** and an asymmetric ciphering algorithm **141***a*. A module **101** can use the second subset of cryptographic parameters **126***a* from a step **1006** with an asymmetric ciphering algorithm **141***a* in order to (i) decrypt the server encrypted data **504** received in a step **1008**, and (ii) read the plaintext second symmetric key **127**. An exemplary datagram **601***a* that includes a symmetric key **127** within an encrypted data that uses asymmetric ciphering **141***a* is illustrated in element **701***a* of FIG. 7 of U.S. patent application Ser. No. 14/039,401, filed Sep. 27, 2013 in the name of John Nix, which is hereby incorporated by reference in its entirety. Note that in a step **1008**, although the set of servers **105** are illustrated as sending the second symmetric key **127** in a response **209**, the module **101** could alternatively send the second symmetric key **127** in a message **208**, where the second symmetric key **127** could be within a module encrypted data **403** that is ciphered with an asymmetric ciphering algorithm **141***a* and the server public key **114** and also uses the second subset of cryptographic parameters **126** from a step **1006**.

In another embodiment, a module **101** and a set of servers **1010** could conduct a key exchange such as Diffie Hellman, ANSI-X.9.63 160, or ECDH **159** in a step **1008** instead of transmitting and/or receiving the full second symmetric key **127**. The key exchange could involve sending numbers or values, possibly including a random number **128***a* or a RAND **912**, instead of the actual symmetric key **127**, and a key derivation function **141***f* could be used with the numbers or values sent to derive a shared secret key **129***b*. The shared secret key **129***b* could comprise the second symmetric key **127** for a step **1008** and a step **1009**. As contemplated herein, in Figures such as FIG. **10** where a symmetric key **127** is illustrated as communicated between two nodes, instead of a symmetric key **127** being directly communicated, values for a key derivation function **141***f* could communicated as a proxy for the symmetric keys **127** illustrated, and the nodes can use the values with a key derivation function **141***f* to determine the symmetric key **127**. In other words, in various figures illustrated herein, where a symmetric key **127** is illustrated as communicated, values to determine a shared symmetric key **127** could be communicated instead, such as values input into a key derivation function **141***f* in order to output a derived shared secret key **129***b* that could comprise a symmetric key **127**. As contemplated herein, the term "establish a symmetric key" can comprise either (i) sending or receiving the symmetric key **127** using an asymmetric ciphering algorithm **141***a* and PM keys, or (ii) sending or receiving data for a key derivation function **141***f* such that a symmetric key **127** (possibly in the form of a derived shared key **129***b*) could be determined from the data sent or received for the key derivation function **141***f*.

At a step **1009**, a module **101** can send a message **208** that includes a module encrypted data **403**, where the module encrypted data **403** is ciphered using the second symmetric key **127**. The second symmetric key **127** (or values for a key derivation function **141***f* to determine the second symmetric key **127**) could be sent or received in a prior step **1008**. The module encrypted data **403** using the second symmetric key **127** could include a server instruction **414**, sensor data **305**, a timestamp **604**, and a security token **401**. Security token **401** and timestamp **604** can prevent replay attacks. If a timestamp **604** is included in a module encrypted data **403**, then a security token **401** could optionally be omitted in a step **1009**. The message **208** in a step **1009** could contain data for a message **208** as depicted and described in connection with FIG. **6**. The module identity **110** could comprise an encrypted module identity **110***a*, although the module identity **110** could also be sent as plaintext or as a session identity such that the session identity (or temporary module identity **110**) within a message **208** at a step **1009** can change over time but also be uniquely associated with a module identity **110** persistently associated with a module **101**.

FIG. **11**

FIG. **11** is a graphical illustration for a module and a network to mutually derive a shared secret key K, in accordance with exemplary embodiments. As described in FIG. **9***b*, exemplary embodiments of the present invention can utilize a combination of an embedded UICC **163** with a module **101**'s derivation of a module private key **112** and module public key **111** in order to obtain a shared secret network key K **129***d*, such that shared secret network key K **129***d* can be utilized with existing and/or legacy mobile network operator infrastructure, including at least one of a plurality of wireless networks **102**. The shared secret network key K **129***d* depicted and described in this FIG. **11** could comprise the shared secret key K used by a module **101** to authenticate and encrypt/decrypt data with a PLMN such as, but not limited to, mobile network operator networks of AT&T® and Verizon® that utilize LTE wireless WAN technology in 2013, and future networks as well that utilize a shared secret key K.

The eUICC **163** in a module **101** illustrated in FIG. **1***c* could utilize a plurality of received eUICC profiles **311** in order to connect with multiple different wireless networks **102** without roaming (i.e. use an activated eUICC profile **313** with a corresponding activated MNO network access credentials **314** for different wireless networks **102** that a module **101** connects with). An activated eUICC profile **313** could be utilized to connect with several different base stations **103** across a wide geographical area that are associated with the same mobile network operator **108**. A different connection to a second wireless network **102** could be associated with a different mobile network operator **108** that utilizes different network access credentials **314** for a different activated eUICC profile **313**.

As illustrated in FIG. **11**, a module **101** could utilize a module key K derivation algorithm **909** in order to derive a secret shared network key K **129***d* in order connect and/or authenticate with a wireless network **102** operated by a mobile network operator **108**, and the wireless network **102** could utilize a network key K derivation algorithm **1101** in order to share a common key K and support communication with a module **101**. In this manner, a module **101** can utilize an eUICC **163** to share a key K with a network **102** without requiring (i) the physical distribution of a shared secret key

K as specified and contemplated in current ETSI standards as of 2013, such as contemplated in 3GPP TS 33.401 V12.9.0 and related standards for a physical SIM or UICC or (ii) the electronic distribution of a shared secret key K as contemplated in ETSI TS 103 383 V12.0.0 and related standards for an eUICC. Future modules **101**, wireless networks **102**, and MNOs **108** could incorporate or support the internal derivation of a secret shared network key K **129***d* in order for a module **101** and a mobile network operator **108** to obtain the same shared key K without requiring the electronic transmission or physical distribution of a shared secret key K.

A module key K derivation algorithm **909** can comprise a series of steps and logic to input at least (i) a derived module private key **1102**, and (ii) a key K network token **1102** and output at least a derived secret shared network key K **129***d*. The format and/or data for a key K network token **1102** as one input into a key derivation function **141***f* within a module key K derivation algorithm **909** can depend on the key derivation function **141***f* and embodiments for a key K network token **1102**, which are described below. The secret shared network key **129***d* can be fully compatible with existing and/or future mobile network standards that utilize a shared secret key K, such that module **101** and MNO **108** could use the mutually derived secret shared network key K **129***d* for all necessary steps in order to establish authenticated and secured communication with a wireless network **102**.

A subset of the steps for using conventional technology with a key K in both authentication of a module **101** and deriving session keys for encryption are depicted and described in connection with FIG. **9***b*, including (i) a step **910** of processing a RES **913** in response to a RAND **912** received by module **101**, (ii) a step **911** of deriving a cipher key CK **914** using the RAND **912** and the derived secret shared network key K **129***d*, and also (iii) deriving additional keys using the RAND **912** and a key K, such as, but not limited to, values for an integrity key (IK), Kasme, Knasenc, Knasint, Kenb, and/or Kupenc. In other words, conventional technology contemplated using a pre-shared secret key K for the various steps listed in the prior sentence, but the present invention contemplates using a mutually derived secret shared network key K **129***d* in order to perform the same steps (and thus the present invention supports widely deployed wireless networks **102** and also future planned networks that continue to use a key K). In the present invention, a derived secret shared network key K **129***d* could be used to process or derive additional keys using a RAND **912**, such as using a step **911** in FIG. **9***b*. The derived additional keys could comprise symmetric keys **127** for use with symmetric ciphering algorithms **141***b* such as, but not limited to, an AES **155** ciphering. A module **101** could also use derived secret shared network key K **129***d* illustrated in a module key K derivation algorithm **909** with future wireless networks **102** that utilize different symmetric keys **127** than those listed above within this paragraph, where the different symmetric keys **127** are also derived from a shared secret key K.

The derived module private key **112** used for input by a module **101** in a module key K derivation algorithm **909** can be derived using a step **515** as depicted and described in connection with FIG. **5***b* and/or FIG. **7**, or a profile activation step **316** as depicted and described in connection with FIG. **3***b*, FIG. **5***b*, and/or FIG. **7**. Module **101** could use at least a set of cryptographic algorithms **141**, a key pair generation algorithm **141***e*, a random number generator **128**, and a set of cryptographic parameters **126** to process or derive the module private key **112**. Although not illustrated in FIG. **11**, module **101** could also derive a corresponding module public key **111** as well. The derived module private key **112** could utilize or be associated with an RSA algorithm **153** or an ECC algorithm **154**, and the use of a set of cryptographic algorithms **141** for a module private key **112** can be specified in the set of cryptographic parameters **126** or a subset of cryptographic parameters **126***a*. An exemplary set of cryptographic parameters **126** and an exemplary subset of cryptographic parameters **126***a* are depicted and described in connection with FIG. **1***i* and additional Figures herein. The subset of cryptographic parameters **126***a* illustrated in FIG. **11** could comprise a set of cryptographic parameters **126**. An exemplary set of cryptographic algorithms **141**, including a key derivation function **141***f*, are depicted and described in connection with FIG. **1***d*, FIG. **1***i*, and other Figures herein.

In exemplary embodiments, including the embodiments illustrated in FIG. **11**, the set of cryptographic parameters **126** for a key derivation function **141***f* in a module key K derivation algorithm **909** could be recorded in a received eUICC profile **311**. Alternatively, the set of cryptographic parameters **126** could be recorded in an eUICC **163**, or the set of cryptographic parameters **126** could be shared between a received eUICC profile **311** and an eUICC **163**. The set of cryptographic algorithms **141**, including (i) a key pair generation algorithms **141***e* used to process the module private key **112** in FIG. **11**, and (ii) a key derivation function **141***f* used in algorithm **909** in FIG. **11**, could be recorded in an eUICC **163**, or a module program **101***i*, or shared between an eUICC **163** and a module program **101***i*. In exemplary embodiments, (i) the set of cryptographic algorithms **141**, including key pair generation algorithms **141***e* and key derivation function **141***f*, (ii) the eUICC **163**, (iii) the set of cryptographic parameters **126**, and (iv) module key K derivation algorithm **909** can be recorded in a nonvolatile memory, such as, but not limited to, a nonvolatile memory **101***w*. In this manner, module **101** can store the algorithms and values when the module **101** is in a dormant or powered-off state. Other possibilities exist as well without departing from the scope of the present invention for the use and location of a set of cryptographic parameters **126** and a set of cryptographic algorithms **141** for (i) deriving a module private key **112** for a module **101** and (ii) utilizing a module key K derivation algorithm **909**, without departing from the scope of the present invention.

As illustrated in FIG. **11**, the derived module private key **112** and key K network token **1102** can be input into a key derivation function **141***f*. The key derivation function **141***f* can use a subset of cryptographic parameters **126***a* and the inputs in order to output a derived shared secret key **129***b*. The use and function of a key derivation function **141***f*, as well as a derived shared secret key **129***b* is also depicted and described in connection with FIG. **1***d* above. A key derivation function **141***f* in a module key K derivation algorithm **909** could comprise any of (i) a Diffie-Hellman key exchange, (ii) an ANSI-X.9.63 160 key derivation where an ECC algorithm is used with derived module private key **112**, (iii) an ECDH **159** key derivation when an ECC algorithm is used with derived module private key **112**, (iv) an ANSI-X.9.42 key derivation, or (v) similar and related algorithms for the derivation of a shared secret key **129***b* using a private key and a subset of cryptographic parameters **126***a*.

For an embodiment illustrated in FIG. **11**, a key derivation function **141***f* could use a Diffie-Hellman key exchange where the subset of cryptographic parameters **126***a* includes a multiplicative group of integers modulo p, where p is

prime, and g is a primitive root mod p. In exemplary embodiments, p can be sufficiently large, such as, but not limited to, and exemplary prime number of at least 250 digits, and g can be a small number, such as, but not limited to, the number **5**. In this embodiment where a key derivation function **141***f* within a module key K derivation algorithm **909** uses a Diffie-Hellman key exchange, the key K network token **1102** could comprise a value received from network **102** associated with network private key **165***a*. In a Diffie-Hellman key exchange, key K network token **1102** could comprise a value equal to g^b mod p, where b equals the network private key **165***a*. Key K network token **1102** could be received by module **101** from network **102** either (i) after an authentication step **907** in FIG. **9***b* using an initial key K **325**, or (ii) key K network token **1102** could be recorded within a received eUICC profile **311** and module **101** could receive key K network token **1102** via a system bus **101***d*. Key K network token **1102** could also be received by module **101** in other steps as well, such as, but not limited to, a step **519**, a step **607**, and/or a step **707**. As noted above in this FIG. **11**, the subset of cryptographic parameters **126***a* of p, g for a Diffie-Hellman key exchange can also be written to a received eUICC profile **311**.

For another embodiment illustrated in FIG. **11**, a key derivation function **141***f* could use an ECDH **159** key exchange with elliptic curve cryptography, where the subset of cryptographic parameters **126***a* includes a common base point G. An ECDH **159** with common base point G is also described in FIG. **1***d*. For this embodiment of a key derivation function **141***f* in a module key K derivation algorithm **909**, module private key **111** and module public key **112** could comprise keys processed with an ECC algorithm **154**, and module **101** could likewise derive the module PM keys using a step **515** or a step **316**. Key K network token **1102** could comprise a network public key **165***b*. The network private key **165***a* and network public key **165***b* could also be processed with an ECC algorithm **154** using the same or equivalent elliptic curve as module PM keys. Key K network token **1102** could be received by module **101** from network **102** either (i) after an authentication step **907** using initial key K **325**, or (ii) key K network token **1102** could be recorded within a received eUICC profile **311** and module **101** could receive key K network token **1102** via a system bus **101***d*. Key K network token **1102** could also be received by module **101** in other steps as well, such as, but not limited to, a step **519**, a step **607**, and/or a step **707**

Other possibilities exist as well for the use of a key derivation function **141***f* and a subset of cryptographic parameters **126***a* within a module key K derivation algorithm **909** without departing from the scope of the present invention. Note a key exchange or a key derivation algorithm **141***f* other than (i) Diffie Hellman and/or (ii) ECDH **159** could utilize a different subset of cryptographic parameters **126***a*. For embodiments where a different algorithm than Diffie Hellman or ECDH **159** is utilized for a key derivation function **141***f* in a module key K derivation algorithm **909**, then (i) a different subset of cryptographic parameters **126***a* and (ii) different or additional data than that depicted in FIG. **11** could be utilized as well. With a different algorithm for a key derivation function **141***f* used in a module key K derivation algorithm **909**, in exemplary embodiments the key derivation function **141***f* could utilize as a minimum input of a derived module private key **112** and a key K network token **1102**. Key K network token **1102** for this alternative embodiment could represent data for the key derivation function **141***f* that is different than the exemplary values for a key K network token **1102** described above with Diffi-Hellman or ECDH **159** for the key derivation function **141***f*.

In an exemplary embodiment, the use of a module private key **112** input into a key derivation function **141***f* within a module key K derivation algorithm **909** could be optionally omitted, and the derived shared secret key **129***b* within a module key K derivation algorithm **909** could comprise a shared secret key **129***c* processed with a shared secret algorithm **141***g*, using a set of component parameters **101***t*. As noted above in connection with Figure if and FIG. **1***g*, a shared secret key **129***c* can be derived without input of data from a network **102** into the shared secret algorithm **141***g*, and thus in an exemplary embodiment module **101** could calculate a derived shared secret key **129***b* within a module key K derivation algorithm **909** without inputting data received from wireless network **102** into the key derivation function **141***f*. In other words, module **101** could use a shared secret key **129***c* as a derived shared secret key **129***b* in order to derive a shared secret network key K **129***d* without receiving data from wireless network **102**. An algorithm token **190** for use with a shared secret algorithm **141***g* in a module key K derivation algorithm **909** can be included in a subset of cryptographic parameters **126***a*.

In preferred embodiments, a module key K derivation algorithm **909** and a network key K derivation algorithm **1101** can utilize the same or related key derivation functions **141***f* and the same or related subsets of cryptographic parameters **126***a* in order to obtain the same or equal value for the derived shared secret key **129***b*. In another embodiment, a key K network token **1102** for the key derivation function **141***f* that is different than Diffi Hellman or ECDH **159** could comprise a shared secret key **129***c* processed with a shared secret algorithm **141***g*, using a set of component parameters **101***t*.

In an exemplary embodiment, module **101** could derive a first module private key **112**, where the first module private key **112** may optionally not be associated with a corresponding module public key **111**. For this exemplary embodiment, module **101** could optionally derive a second module private key **112** that is associated with a corresponding module public key **111**, and the second module private key **112** and corresponding module public key **111** could comprise a module PM key pair **315**. The derivation of a module PM key pair **315** could optionally be omitted and still utilize the module key K derivation algorithm **909** illustrated in FIG. **11**. The first module private key **112** that is not associated with a corresponding module public key **111** could be utilized as the derived module private key **112** input into a key derivation function **141***f* within a module key K derivation algorithm **909**. In this embodiment where the first module private key **112** that is not associated with a corresponding module public key **111** is utilized in a module key K derivation algorithm **909**, then key K module token **1103** below in a network key K derivation algorithm **1101** can be data associated with the first module private key **112** as described in this paragraph as opposed to a first module public key **111** (since the first module public key **111** can be optionally omitted).

The output of a key derivation function **141***f* in a module key K derivation algorithm **909** can be a number comprising a derived shared secret key **129***b*, which is also depicted and described in connection with FIG. **1***d* and FIG. **1***c*. In exemplary embodiments, the use of a key derivation function **141***f* such as, but not limited to, a Diffie Hellman key exchange or ECDH **159**, can output a key that is a different length than a key K for a wireless network **102** (or key Ki

for use with 3G networks). As currently specified in ETSI/3GPP standards for LTE networks, the shared secret key K, (i) recorded in a SIM or UICC, and a MNO **108** HSS, and (ii) described in 3GPP TS 33.401 V12.9.0 and related standards, comprises a random number with a length of 128 bits. The length of key K for standards-based wireless networks **102** may be extended in the future. The use of shared secret key K for authentication of a module **101**, and also for ciphering and data integrity, with a wireless network **102** that implements ETSI and/or 3GPP standards is also defined in the specifications ETSI TS 135 205-209 and related standards.

A key processing algorithm **141***i* within a module key K derivation algorithm **909** can (i) use as input the output of the key derivation function **141***f* in the form of a derived shared secret key **129***b*, and (ii) transform the derived shared secret key **129***b* into a number that is 128 bits in length (or other key lengths for key K supported by wireless network **102**). In an exemplary embodiment, (i) the length of derived module private key **112**, (ii) the length of parameters **126***a*, and (iii) an algorithm for key derivation function **141***f* in a module key K derivation algorithm **909** are selected such that the length of derived shared secret key **129***b* can be greater than the length of key K specified for wireless network **102**. In this embodiment, the key processing algorithm **141***i* can take steps to (i) truncate derived shared secret key **129***b*, (ii) select a subset of bits within derived shared secret key **129***b*, and/or (iii) take steps to securely and/or randomly reduce the size of derived shared secret key **129***b* to match the key length of key K specified for wireless network **102**. In exemplary embodiments, the key processing algorithm **141***i* within a module key K derivation algorithm **909** (or at least cryptographic parameters **126** for the key processing algorithm **141***i* in a module key K derivation algorithm **909**) can be included in a received eUICC profile **311**.

For embodiments where the derived shared secret key **129***b* in a module key K derivation algorithm **909** can be less than the key length of key K specified for wireless network **102**, then key processing algorithm **141***i* can perform a key lengthening function, such as, but not limited to, using a secure hash algorithm **141***c* with input of at least the derived shared secret key **129***b*. The secure hash algorithm **141***c* could be selected such that the length of output of the secure hash algorithm **141***c* matches the length of key K specified for wireless network **102**. The secure hash algorithm **141***c* for use in a module key K derivation algorithm **909** could be specified in a set of cryptographic parameters **126**. Other possibilities exist as well for a key processing algorithm **141***i* to lengthen a derived shared secret key **129***b* without departing from the scope of the present invention.

In an exemplary embodiment where the length of key K specified for wireless network **102** in the future equals 256 bits, key processing algorithm **141***i* could comprise an SHA-256 156 algorithm, such that the output of key processing algorithm **141***i* comprises a number with 256 bits in length, with input using a derived shared secret key **129***b* that could comprise a number less than, equal to, or greater than a length of 256 bits, and other possibilities for a key processing algorithm **141***i* exists as well. In exemplary embodiments, key processing algorithm **141***i* includes a secure hash algorithm **141***c*, such that the derived shared secret key **129***b* in a module key K derivation algorithm **909** is input into the secure hash algorithm **141***c*. Although not illustrated in FIG. **1***d* above, a key processing algorithm **141***i* could be included in a set of cryptographic algorithms **141**.

As depicted in FIG. **11**, the output of key processing algorithm **141***i* within a module key K derivation algorithm **909** can comprise a shared secret network key K **129***d*. A shared secret network key K **129***d* is also described in a step **909** depicted and described in connection with FIG. **9***b*. Upon deriving the shared secret network key K **129***d*, module **101** could record the value in either an activated eUICC profile **313** or also possibly a received eUICC profile **311** (where the received eUICC profile **311** is not activated) within an eUICC **163**. A wireless network **102** could utilize a network key K derivation algorithm **1101** in order to securely obtain the same value for shared secret network key K **129***d*. Module **101** and/or an eUICC **163** could then utilize the shared secret network key K **129***d* to connect with and/or authenticate with a wireless network **102** using the steps **910** and **911** depicted and described in connection with FIG. **9***b*. In exemplary embodiments, module **101** and wireless network **102** could utilize the shared secret network key K **129***d* with the algorithms specified in ETSI TS 135 205-209, as well as subsequent and related standards, in order for module **101** to authenticate and/or connect with wireless network **102**. Other possibilities exist as well without departing from the scope of the present invention.

A network key K derivation algorithm **1101** can be used by a wireless network **102** in order to derive a secret shared network key K **129***d* that is the same or equals the derived secret shared network key K **129***d* processed by a module **101** using a module key K derivation algorithm **909**. In this manner, wireless network **102** and module **101** can both utilize the same, derived secret shared network key K **129***d* for communication. The commonly shared secret shared network key K **129***d* can be used by both module **101** and wireless network **102**/mobile network operator **108** for (i) authentication and (i) the subsequent derivation of additional symmetric keys **127**, where the additional symmetric keys **127** could be derived from a key derivation function **141***f* (where a key derivation function **141***f* would be used to derive symmetric keys **127** in the form of derived shared secret keys **129***b* in a manner illustrated in FIG. **1***d* that can be different than the use of a key derivation function **141***f* illustrated in FIG. **11**).

A server **105** as depicted and described in connection with FIG. **1***k* and FIG. **1***m* could reside in the network for a mobile network operator **108**, where the wireless network **102** as illustrated in FIG. **1***a* could comprise a radio access segment for the mobile network operator **108**. The server **105** could also be part of a set of servers **1010**, and the set of servers **1010** could also be within a network for a mobile network operator. The server **105** or set of servers **1010** could utilize the components depicted and described in connection with FIG. **1***k* and FIG. **1***m* in order to process and/or perform a network key K derivation algorithm **1101**, including using (i) a storage **105***m* to record the key derivation function **141***f* and associated cryptographic parameters **126**, (ii) a processor **105***b* to perform calculations in order to implement the key derivation function **141***f*, (iii) a system bus **105***d* in order to move data from storage into a RAM **105***e* for further processing, (iv) a physical interface **105***a* such as Ethernet to send and receive data, and (v) a module database **105***k* to record a network module identity **101***b* and a shared secret network key K **129***d* for each of a plurality of modules **101** that could connect to a wireless network **102**. In exemplary embodiments, a home subscriber server (HSS) within an LTE network and subsequent, related networks including wireless networks based on LTE Advanced could operate or

process a network key K derivation algorithm **1101**, and the HSS could also function as a server **105** or a set of servers **1010** as contemplated herein.

A network key K derivation algorithm **1101** operating on a server **105**, HSS, and/or set of servers **1010** can include a key derivation function **141***f* and a key processing algorithm **141***i*. The key derivation function **141***f* within a network key K derivation algorithm **1101** can be equivalent or the same algorithm as a key derivation function **141***f* used within a module key K derivation algorithm **909**, as depicted and described in connection with this FIG. **11** above. As illustrated in FIG. **11**, (i) a network private key **165***a* and (ii) a module key K token **1103** can be input into a key derivation function **141***f* within a network key K derivation algorithm **1101**. The key derivation function **141***f* can use a subset of cryptographic parameters **126***a* and the input in order to output a derived shared secret key **129***b*. For an embodiment illustrated in FIG. **11**, a key derivation function **141***f* in a network key K derivation algorithm **1101** could use a Diffie-Hellman key exchange where the subset of cryptographic parameters **126***a* includes a multiplicative group of integers modulo p, where p is prime, and g is a primitive root mod p. In this embodiment where a key derivation function **141***f* within a network key K derivation algorithm **1101** uses a Diffie-Hellman key exchange (or similar key exchange protocols), the key K module token **1103** could comprise a value received from module **101** associated with module private key **112**. The set of servers **1010** could receive the key K module token **1103** in a step **908** in FIG. **9***b* or a step **516** in FIG. **5***b*, and other possibilities exist as well for a server **1010** to receive the key K module token **1103**.

In a Diffie-Hellman key exchange for a key derivation function **141***f* within a network key K derivation algorithm **1101**, key K module token **1103** could comprise a value equal to g^a mod p, where a equals the module private key **112**. Key K module token **1103** could be received from module **101** after an authentication step **907** using initial key K **325**, and other possibilities exist as well without departing from the scope of the present invention. The subset of cryptographic parameters **126***a* of p, g for a Diffie-Hellman key exchange with a module **101** using a network module identity **101***b* can also be written to a module database **105***k* and also the received eUICC profile **311**. In exemplary embodiments, a module database **105***k* can also record a plurality of received eUICC profiles **311** for a plurality of modules **101**, where each module **101** uses either module identity **110** or network module identity **101***b*. In exemplary embodiments a different subset of cryptographic parameters **126***a* for a key derivation function **141***f* in a network key K derivation algorithm **1101** can be used for each module **101** in order to increase security.

For another embodiment illustrated in FIG. **11**, a key derivation function **141***f* could use an ECDH **159** key exchange with elliptic curve cryptography, where the subset of cryptographic parameters **126***a* includes a common base point G. For this embodiment where a key derivation function **141***f* in a network key K derivation algorithm **1101** comprises an ECDH **159** key exchange, network private key **165***a* and network public key **165***b* could comprise keys processed with an ECC algorithm **154**. A server **105** or set of servers **1010** could derive the network private key **165***a* and network public key **165***b* using a key pair generation algorithm **141***e*. Key K module token **1103** could comprise a module public key **111**, where the module private key **112** and module public key **111** could also be processed with an ECC algorithm **154** using the same or elliptic curve as the network PM keys **165***a* and **165***b*. Key K module token **1103**, in the form of a module public key **111** with an ECDH **159** for a key derivation function **141***f* in a network key K derivation algorithm **1101**, could be received from module **101** after an authentication step **907** using an initial key K **325**. Other possibilities exist as well for the use of a key derivation function **141***f*, key K module token **1103**, and a subset of cryptographic parameters **126***a* both (i) within a network key K derivation algorithm **1101** and (ii) to derive a shared secret network key K **129***d* without departing from the scope of the present invention.

In an exemplary embodiment, the use of a network private key **165***a* input into a key derivation function **141***f* within a network key K derivation algorithm **1101** could be optionally omitted, and the derived shared secret key **129***b* within a network key K derivation algorithm **1101** could comprise a shared secret key **129***c* processed with a shared secret algorithm **141***g*, using a set of component parameters **101***t*. As noted above in connection with Figure if and FIG. **1***g*, a shared secret key **129***c* can be derived without input of data from a module **101** into the shared secret algorithm **141***g*, and thus in an exemplary embodiment MNO **108** could calculate a derived shared secret key **129***b* within a network key K derivation algorithm **1101** without inputting data received from module **101** into the key derivation function **141***f*. In other words, MNO **108** (using a server **105**) could use a shared secret key **129***c* as a derived shared secret key **129***b* in a network key K derivation algorithm **1101** in order to derive a shared secret network key K **129***d* without receiving data from module **101**. An algorithm token **190** for use with a shared secret algorithm **141***g* in a network key K derivation algorithm **1101** can be included in a subset of cryptographic parameters **126***a*, and the subset of cryptographic parameters **126***a* could be included in the received eUICC profile **311** for a module **101**. An HSS for a network **102** could process or create information for the received eUICC profile **311**. As depicted and described in connection with FIG. **1***f*, (i) a server **105**, which could be operated by MNO **108**, or (ii) MNO **108** could calculate shared secret key **129***c* using component parameters **101***t* for a module **101** with module identity **110** in a module database **105***k*.

For embodiments that do not use a shared secret key **129***c* in a network key K derivation algorithm **1101**, the output of a key derivation function **141***f* in a network key K derivation algorithm **1101** can be a number or string comprising a derived shared secret key **129***b*, which is also depicted and described in connection with FIG. **1***d* and FIG. **1***c*. The derived shared secret key **129***b* in a network key K derivation algorithm **1101** can be the same or equivalent for a derived shared secret key **129***b* as described in a module key K derivation algorithm **909**. The sub-steps and description for a derived shared secret key **129***b* in a module key K derivation algorithm **909** can apply for a derived shared secret key **129***b* in a network key K derivation algorithm **1101**.

A key processing algorithm **141***i* within a network key K derivation algorithm **1101** can take the same or equivalent steps as described for a key processing algorithm **141***i* within a module key K derivation algorithm **909** described above in this FIG. **11**. For embodiments where the derived shared secret key **129***b* can be less than the key length of key K specified for wireless network **102**, then key processing algorithm **141***i* can perform a key lengthening function, such as, but not limited to, using a secure hash algorithm **141***c* with at least input of the derived shared secret key **129***b*. The secure hash algorithm **141***c* could be selected such that the length of output of the secure hash algorithm **141***c* matches the length of key K specified for wireless network **102**. The

secure hash algorithm **141***c* for use in a network key K derivation algorithm **1101** could be specified in a set of cryptographic parameters **126**. For embodiments where the length of derived shared secret key **129***b* in a network key K derivation algorithm **1101** can be greater than the length of key K specified for wireless network **102**, the key processing algorithm **141***i* can take steps to (i) truncate derived shared secret key **129***b*, (ii) select a subset of bits within derived shared secret key **129***b*, and/or (iii) take steps to securely and/or randomly reduce the size of derived shared secret key **129***b* to match the key length of key K specified for wireless network **102**. In exemplary embodiments, key processing algorithm **141***i* includes a secure hash algorithm **141***c*, such that the derived shared secret key **129***b* in a network key K derivation algorithm **1101** is input into the secure hash algorithm **141***c* in order to output the secret shared network key K **129***d*.

In exemplary embodiments, the key processing algorithm **141***i* for a network key K derivation function **1101** can take the same or equal value for a derived shared secret key **129***b* in a module key K derivation function **909** and output the same or equal value for shared secret network key K **129***d*. One difference between a key processing algorithm **141***i* for a network key K derivation function **1101** and a a key processing algorithm **141***i* for a module key K derivation function **909** is that the a key processing algorithm **141***i* for a network key K derivation function **1101** can optionally include logic to detect a "collision", where the shared secret network key K **129***d* may already be used by a different module **101** using a different module identity **110** or network module identity **110***b*. In this case of a "collision" network **102** could take steps such as (i) requesting the module **101** derive a new and different shared secret key **129***b* (which could involve the use of a different random number **128***a* by module **101**), or (ii) network **102** could take steps such that the same shared secret network key K **129***d* (in the case of a "collision) could be supported by two different modules **101** using two different module identities **110** or network module identities **110***b*.

As depicted in FIG. **11**, the output of key processing algorithm **141***i* within a network key K derivation algorithm **1101** can comprise a shared secret network key K **129***d*. A shared secret network key K **129***d* is also described in a step **909** depicted and described in connection with FIG. **9***b*. Upon deriving the shared secret network key K **129***d*, MNO **108**, using a server **105** or set of servers **1010** could record the value in within a module database **105***k*. The module database **105***k* could reside within an HSS or similar servers for an LTE and related networks. A module **101** could utilize a module key K derivation algorithm **909** in order to securely obtain the same value for shared secret network key K **129***d*. MNO **108** and wireless network **102** could then utilize the shared secret network key K **129***d* to connect with and/or authenticate a module **101** using the steps for a network in steps **910** and **911** depicted and described in connection with FIG. **9***b*. In exemplary embodiments, module **101** and wireless network **102** could utilize the shared secret network key K **129***d* with the algorithms specified in ETSI TS 135 205-209, as well as subsequent and related standards, in order for module **101** to authenticate and/or connect with wireless network **102**. Other possibilities exist as well without departing from the scope of the present invention.

CONCLUSION

Various exemplary embodiments have been described above. Those skilled in the art will understand, however, that changes and modifications may be made to those examples without departing from the scope of the claims.

What is claimed is:

1. A method for a mobile device with an embedded universal integrated circuit card (eUICC) to securely communicate with a wireless network, the method performed by the mobile device, the method comprising:

a) storing, in the eUICC, a first module private key, a corresponding first module public key, and a network public key;

b) receiving, from a first server associated with the wireless network, an encrypted profile for the eUICC comprising cryptographic parameters, a module identity, and a key K;

c) generating a shared secret key using a first elliptic curve Diffie-Hellman (ECDH) key exchange with the first module private key and the network public key;

d) decrypting, with the shared secret key, at least a portion of the encrypted profile for the eUICC;

e) generating, by the eUICC, a second module public key and a corresponding second module private key;

f) sending, to a second server associated with the wireless network, the second module public key;

g) generating a symmetric key using a second ECDH key exchange with the second module private key and the cryptographic parameters;

h) generating, with the symmetric key, module encrypted data, the module encrypted data comprising the module identity; and

i) sending, to the second server, the module encrypted data.

2. The method of claim **1**, wherein the module identity comprises an international mobile subscriber identity (IMSI).

3. The method of claim **1**, wherein the module identity comprises a permanent identifier for the mobile device.

4. The method of claim **1**, wherein the cryptographic parameters comprise an identifier for a set of cryptographic parameters.

5. The method of claim **1**, further comprising in step c) deriving the shared secret key using an American National Standards Institute (ANSI) standard X-9.63 key derivation function.

6. The method of claim **1**, further comprising in step g) deriving the symmetric key using an ANSI standard X-9.63 key derivation function.

7. The method of claim **1**, wherein the first server mutually derives the shared secret key using the first ECDH key exchange with the first module public key and a network private key corresponding to the network public key.

8. The method of claim **1**, further comprising in step e), generating, by the eUICC, the second module public key and the second module private key using a random number generator and input from a sensor.

9. The method of claim **1**, further comprising in step h) generating, with the symmetric key and an Advanced Encryption Standard (AES), the module encrypted data.

10. The method of claim **1**, wherein steps g) and h) occur before step f).

11. The method of claim **1**, wherein the network public key is associated with an eUICC subscription manager.

12. The method of claim **11**, wherein the eUICC subscription manager comprises the first server.

13. The method of claim **1**, further comprising: j) receiving, from the wireless network, a random number (RAND) and generating a response (RES) using the RAND and the key K.

14. The method of claim **1**, further comprising before step b), authenticating the first server by (i) receiving a server digital signature and (ii) verifying the server digital signature with a server public key.

15. The method of claim **1**, further comprising (i) in step a), storing a server name for the first server and a port number in a nonvolatile memory of the eUICC, and (ii) before step b) sending the first module public key to the first server.

16. The method of claim **1**, wherein the first server, the second server, and the wireless network are associated with a mobile network operator.

17. The method of claim **1**, wherein the eUICC comprises a processor, firmware, and protected memory.

18. The method of claim **1**, wherein the cryptographic parameters include a base point G for an elliptic curve.

19. The method of claim **1**, wherein the mobile device comprises a wireless device with a radio for communicating with a plurality of base stations for the wireless network.

20. The method of claim **1**, wherein the eUICC comprises a package soldered to a circuit board of the mobile device.

* * * * *