US010714890B1

(12) **United States Patent**
Lin et al.

(10) **Patent No.: US 10,714,890 B1**
(45) **Date of Patent: Jul. 14, 2020**

(54) **TRANSMITTER OPTICAL SUBASSEMBLY ARRANGEMENT WITH VERTICALLY-MOUNTED MONITOR PHOTODIODES**

(71) Applicant: **Applied Optoelectronics, Inc.**, Sugar Land, TX (US)

(72) Inventors: **Kai-Sheng Lin**, Sugar Land, TX (US); **Hsiu-Che Wang**, Rosenberg, TX (US); **Kevin Liu**, Houston, TX (US)

(73) Assignee: **Applied Optoelectronics, Inc.**, Sugar Land, TX (US)

(*) Notice: Subject to any disclaimer, the term of this patent is extended or adjusted under 35 U.S.C. 154(b) by 0 days.

(21) Appl. No.: **16/268,765**

(22) Filed: **Feb. 6, 2019**

(51) **Int. Cl.**

H01S 5/022	(2006.01)
H01S 5/024	(2006.01)
H01S 5/40	(2006.01)
H01S 5/00	(2006.01)

(52) **U.S. Cl.**
CPC ***H01S 5/02236*** (2013.01); ***H01S 5/0014*** (2013.01); ***H01S 5/02415*** (2013.01); ***H01S 5/4012*** (2013.01); ***H01S 5/4087*** (2013.01)

(58) **Field of Classification Search**
CPC H01S 5/02236; H01S 5/0014; H01S 5/02415; H01S 5/4012; H01S 5/4087; H01S 5/02208; H01S 5/02212
See application file for complete search history.

(56) **References Cited**

U.S. PATENT DOCUMENTS

2004/0163836 A1* 8/2004 Kumar H01S 5/02212 174/50
2018/0138657 A1* 5/2018 Miura G02B 6/32

* cited by examiner

Primary Examiner — Armando Rodriguez
(74) *Attorney, Agent, or Firm* — Grossman Tucker Perreault & Pfleger, PLLC; Norman S. Kinsella

(57) **ABSTRACT**

The present disclosure is generally directed to a multi-channel TOSA with vertically-mounted MPDs to reduce TOSA housing dimensions and improve RF driving signal quality. In more detail, a TOSA housing consistent with the present disclosure includes at least one vertical MPD mounting surface that extends substantially transverse relative to a LD mounting surface, with the result being that a MPD coupled to the vertical MPD mounting surface gets positioned above an associated LD coupled to the LD mounting surface. The vertically-mounted MPD thus makes regions adjacent an LD that would otherwise be utilized to mount an MPD available for patterning of conductive RF traces to provide an RF driving signal to the LD. The conductive RF traces may therefore extend below the vertically-mounted MPD to a location that is proximate the LD to allow for relatively short wire bonds therebetween.

19 Claims, 8 Drawing Sheets

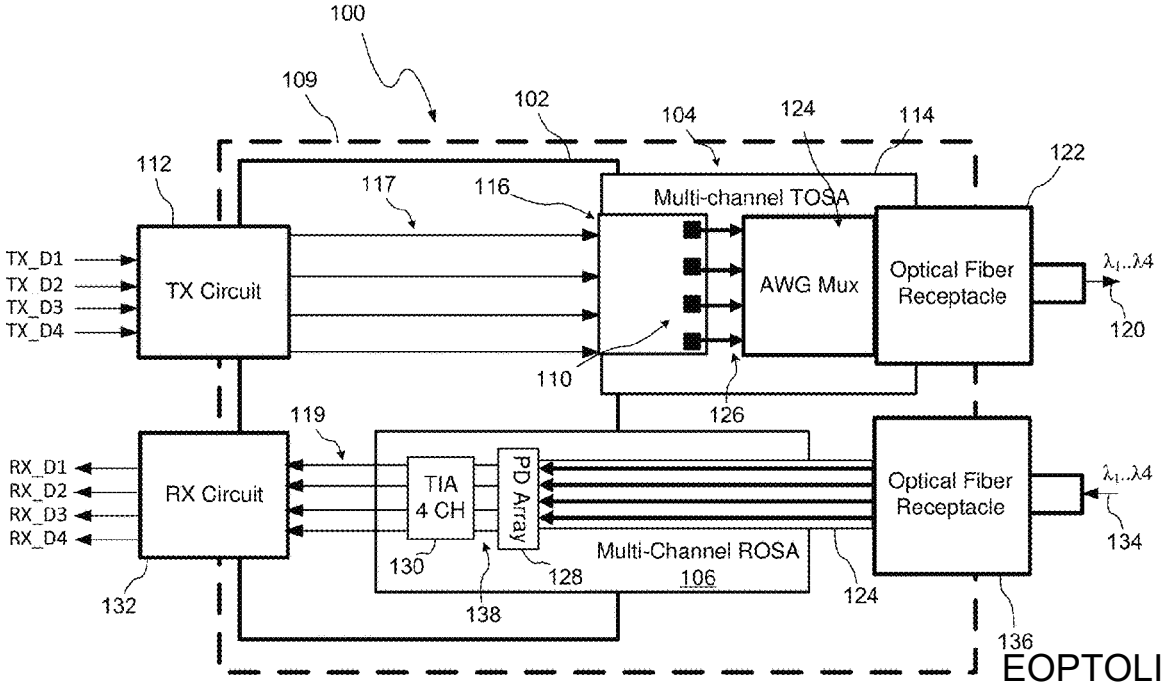

EOPTOLINK-1001
Eoptolink v. Applied Optoelectronics
IPR2026-00122

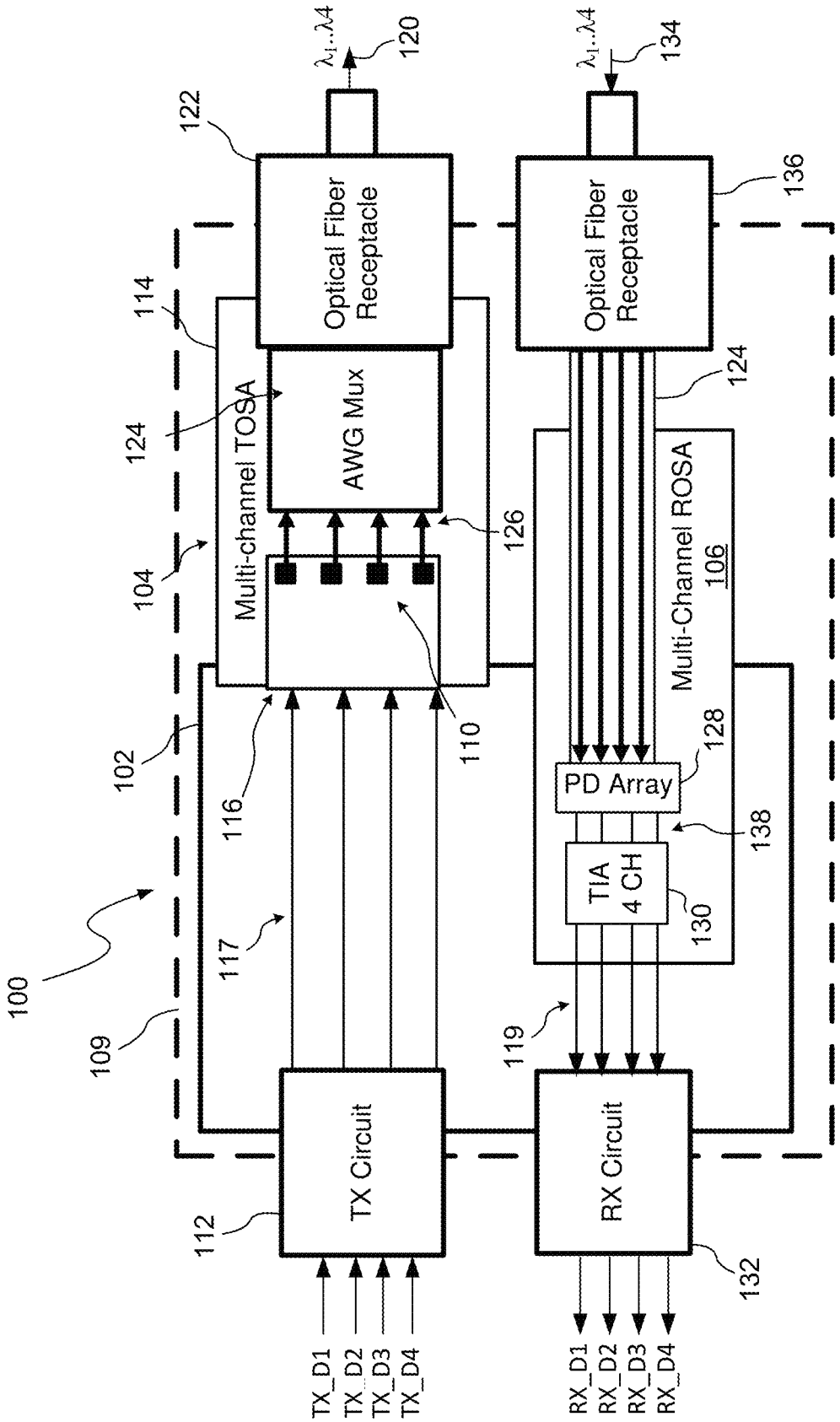
Optical Fiber Receptacle
Optical Fiber Receptacle
AWG Mux
Multi-channel TOSA
Multi-Channel ROSA
106
PD Array
TIA 4 CH
TX Circuit
RX Circuit
TX_D1
TX_D2
TX_D3
TX_D4
RX_D1
RX_D2
RX_D3
RX_D4
$\lambda_1..\lambda_4$
$\lambda_1..\lambda_4$
100
102
104
109
110
112
114
116
117
119
120
122
124
124
126
128
130
132
134
136
138

FIG. 1

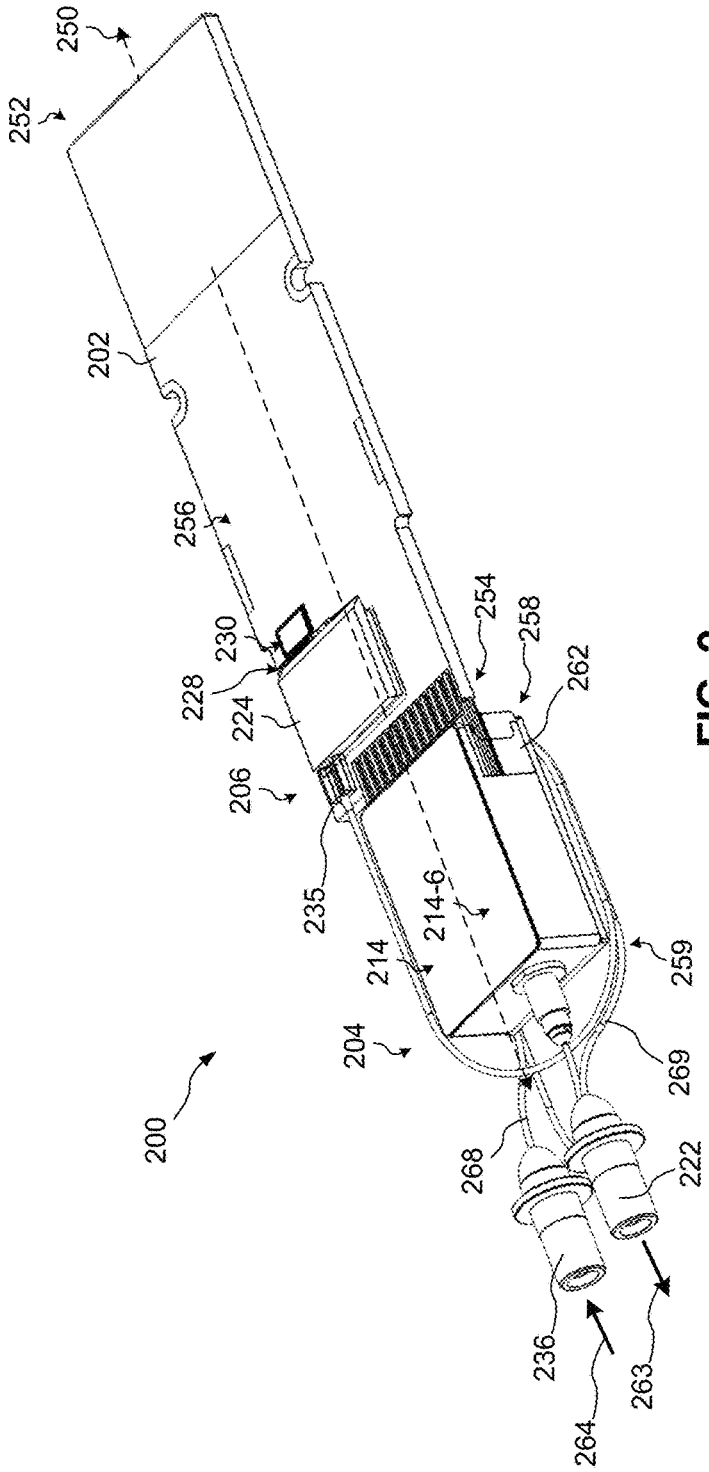
250
252
202
256
230
228
224
206
235
214-6
214
204
200
268
236
264
263
222
269
259
262
258
254

FIG. 2

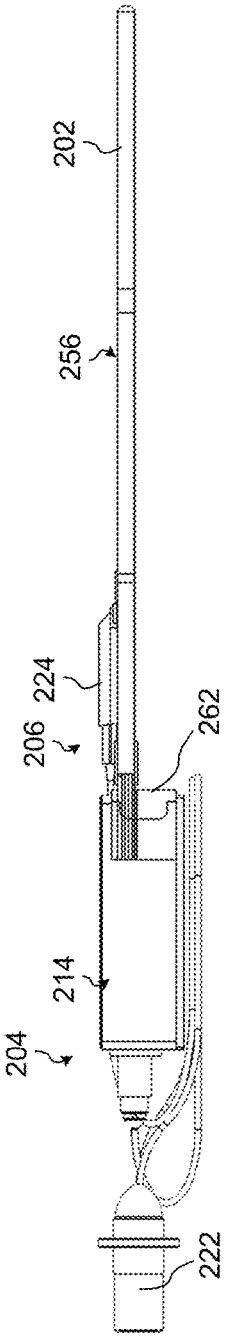
202
256
224
206
262
214
204
222

FIG. 3

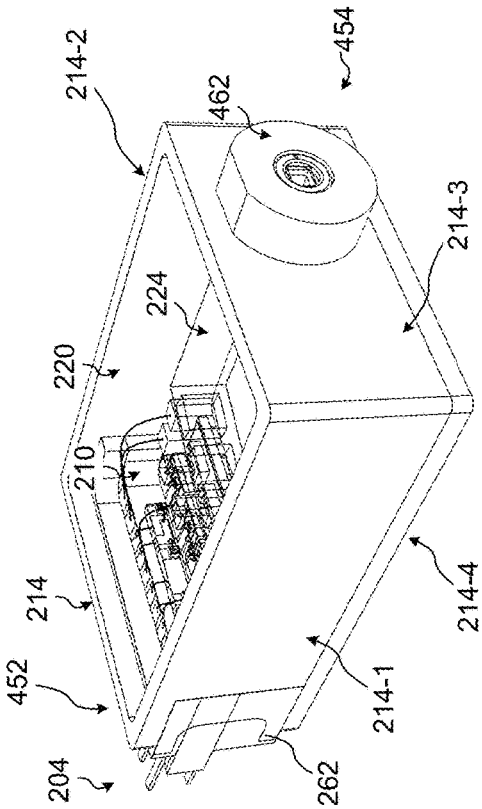
204
452
214
220
210
224
214-2
462
454
214-3
214-4
214-1
262

FIG. 4

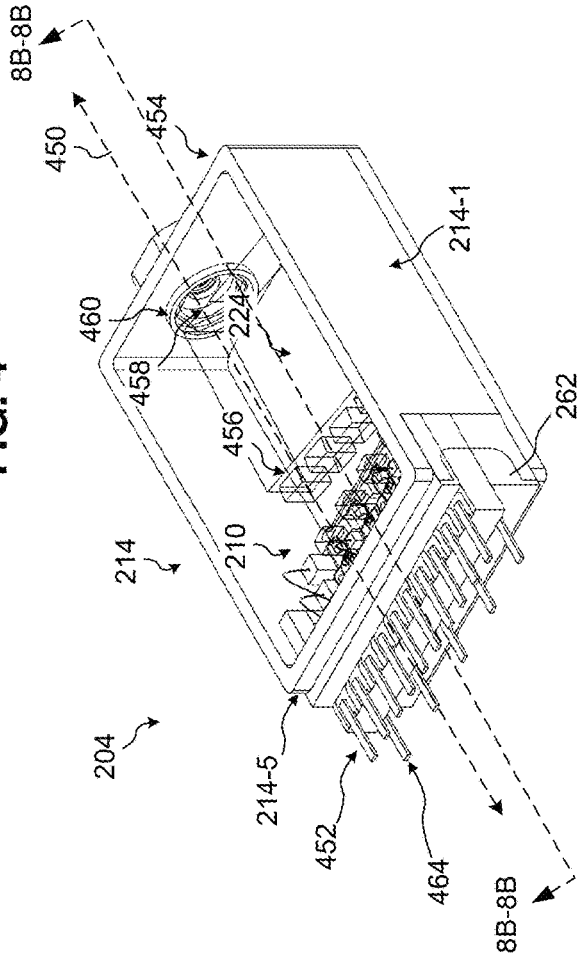
8B-8B
450
454
460
458
224
214-1
456
262
214
210
204
214-5
452
464
8B-8B

FIG. 5

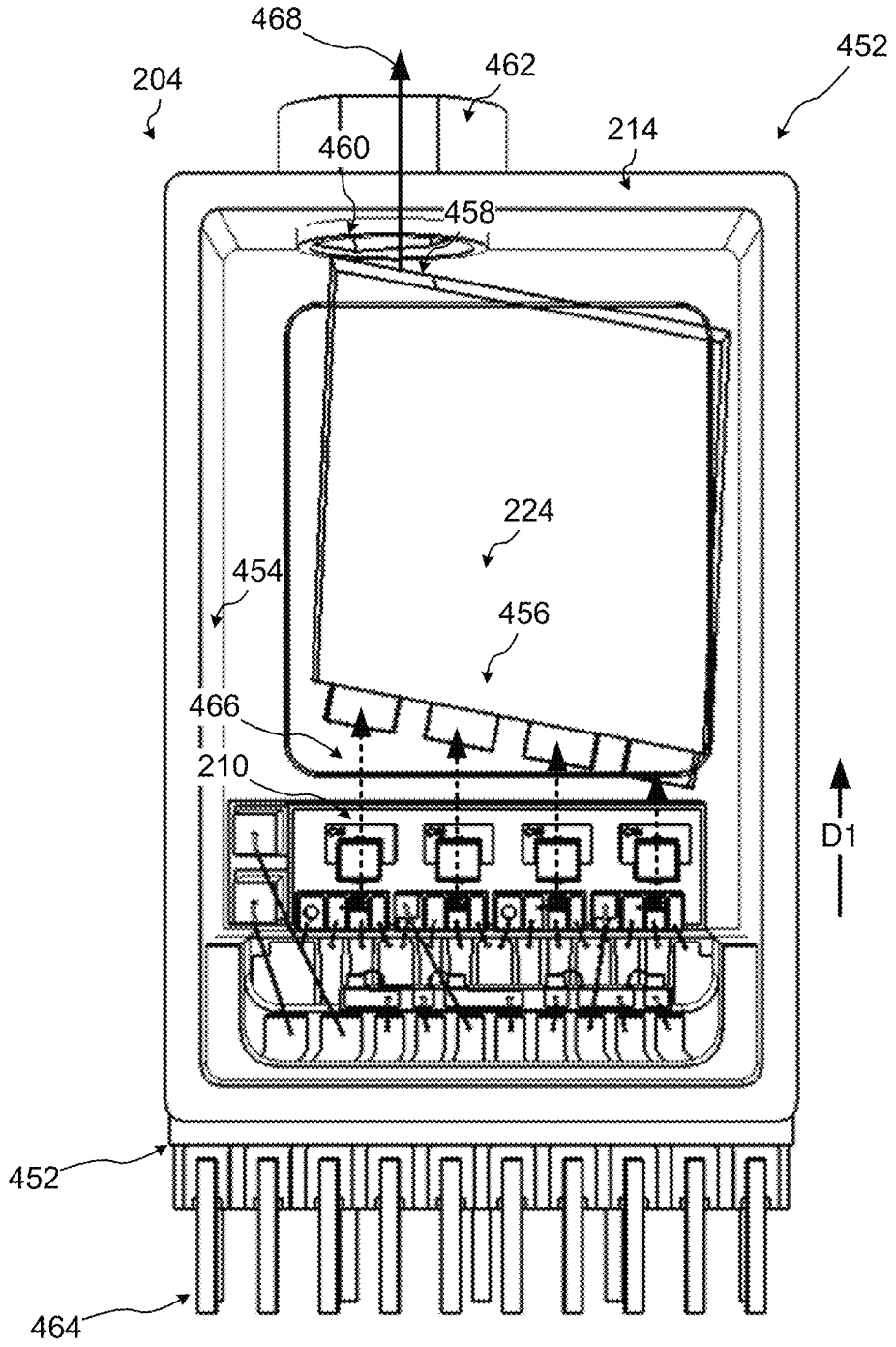

FIG. 6

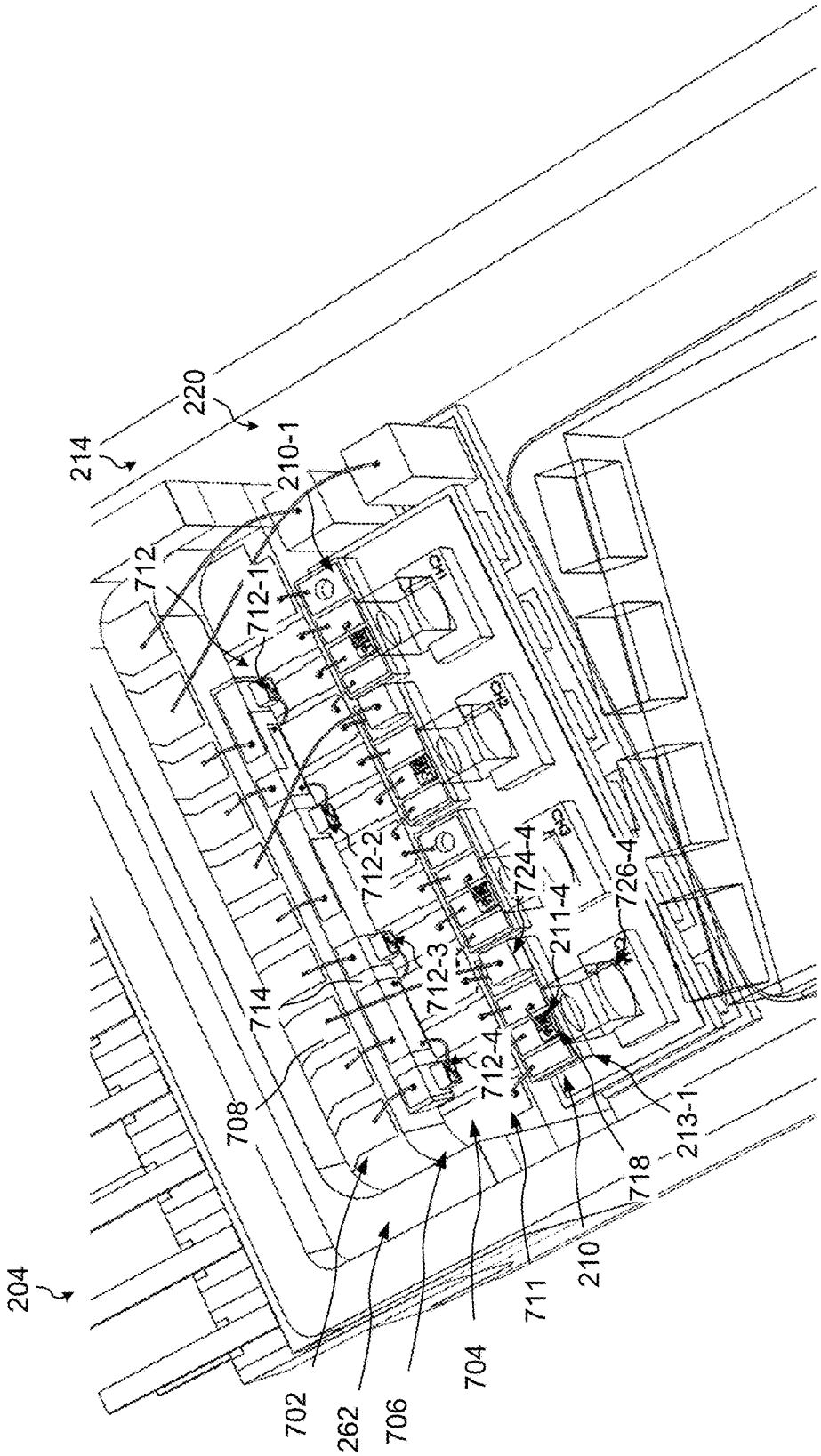
204
214
220
210-1
712
712-1
712-2
712-3
712-4
714
708
702
262
706
704
711
210
718
213-1
211-4
724-4
726-4

FIG. 7

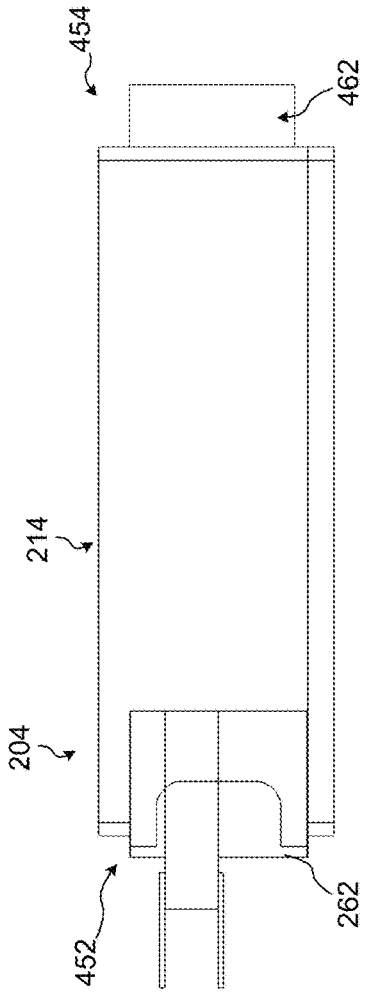
454
462
214
204
452
262

FIG. 8A

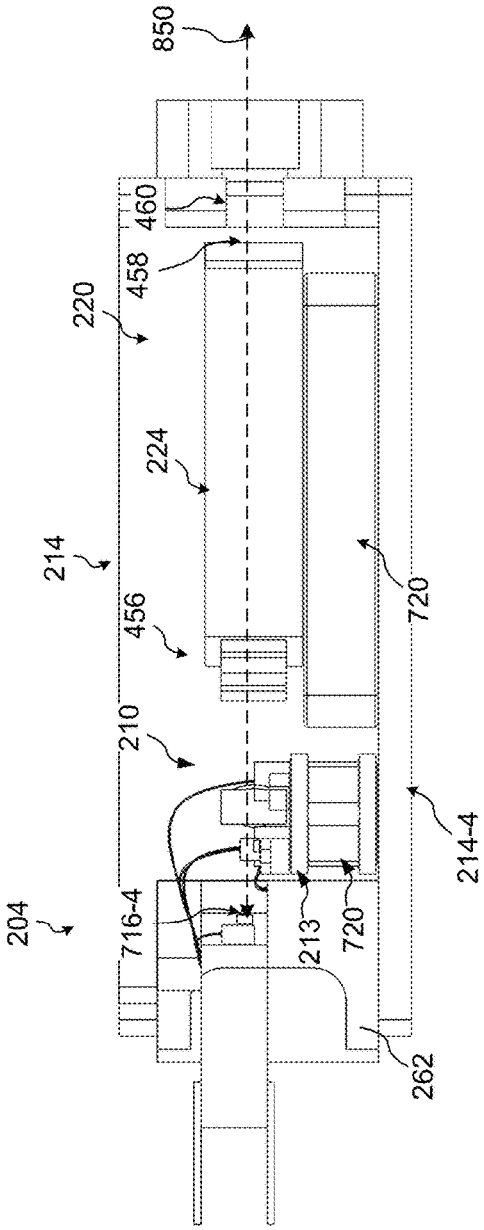
850
460
458
220
224
214
456
210
720
214-4
204
716-4
213
720
262

FIG. 8B

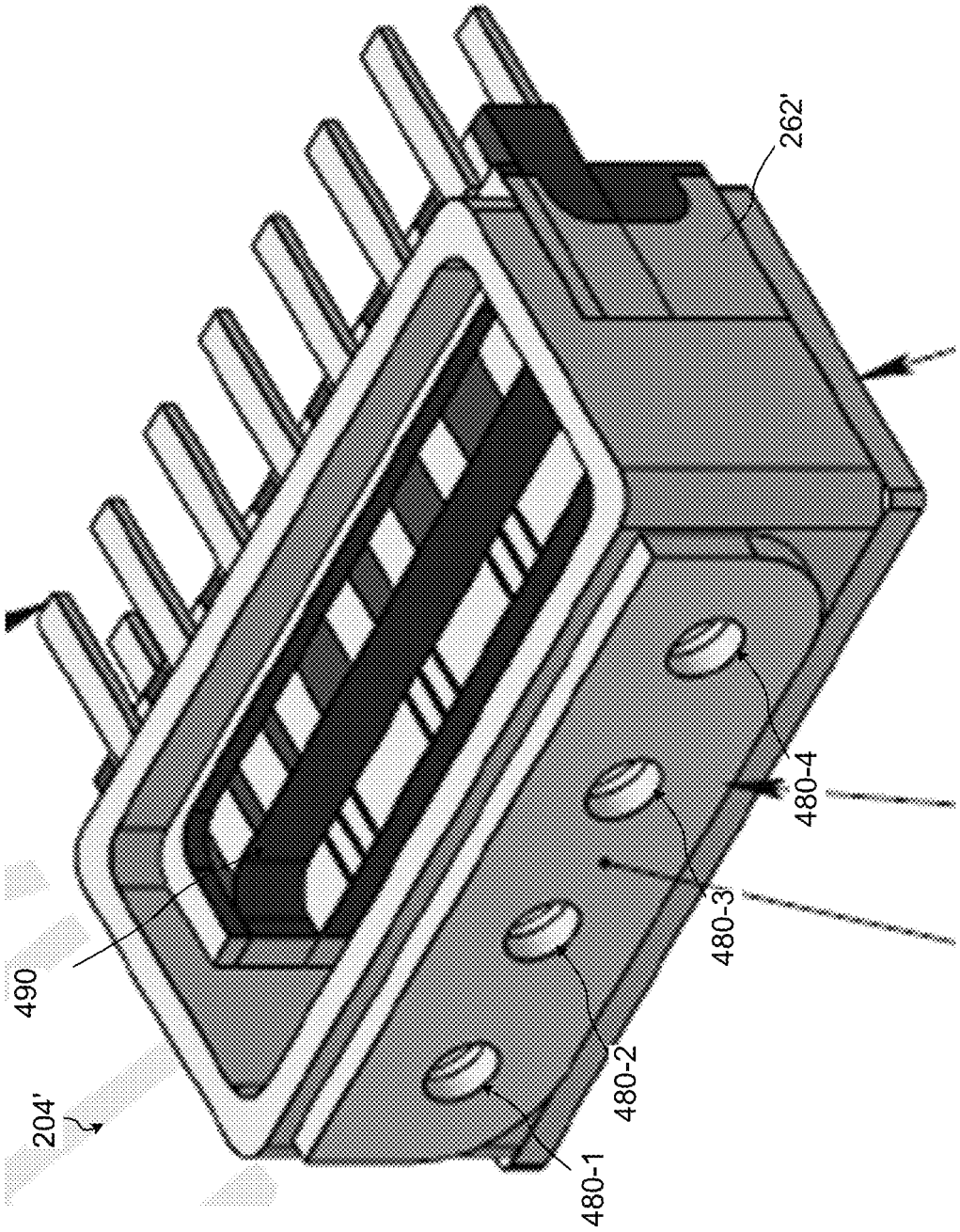

FIG. 9

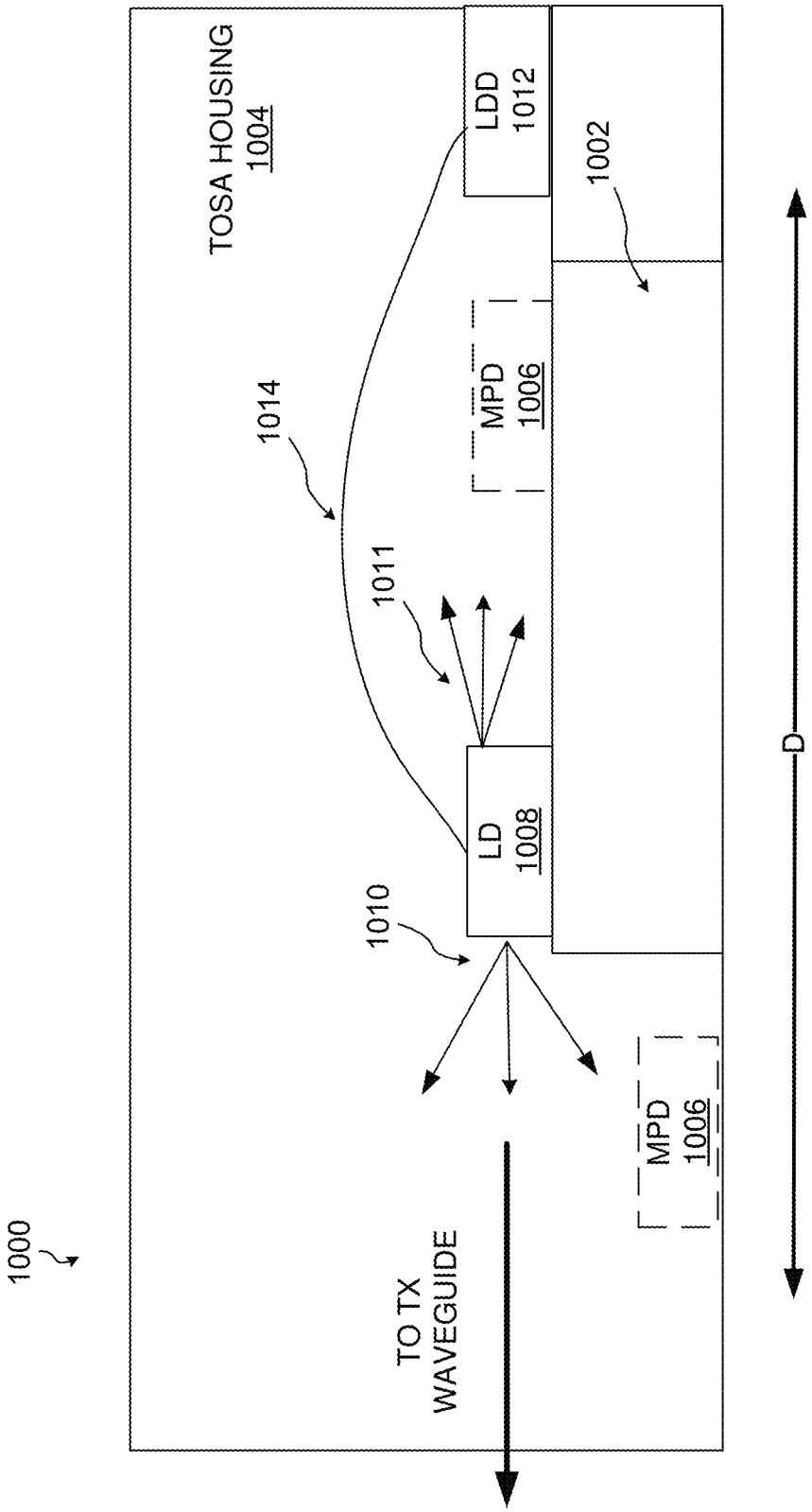
1000
TOSA HOUSING
1004
LDD
1012
1002
1014
MPD
1006
1011
LD
1008
1010
MPD
1006
TO TX
WAVEGUIDE
D

FIG. 10

TRANSMITTER OPTICAL SUBASSEMBLY ARRANGEMENT WITH VERTICALLY-MOUNTED MONITOR PHOTODIODES

TECHNICAL FIELD

The present disclosure relates to optical communications, and more particularly, to a transmitter optical subassembly (TOSA) arrangement having vertically-mounted monitor photodiodes to reduce housing dimensions and improve radio frequency (RF) drive signal quality.

BACKGROUND INFORMATION

Optical transceivers are used to transmit and receive optical signals for various applications including, without limitation, internet data center, cable TV broadband, and fiber to the home (FTTH) applications. Optical transceivers provide higher speeds and bandwidth over longer distances, for example, as compared to transmission over copper cables. The desire to provide higher transmit/receive speeds in increasingly space-constrained optical transceiver modules has presented challenges, for example, with respect to thermal management, insertion loss, RF driving signal quality and manufacturing yield.

Optical transceiver modules generally include one or more transmitter optical subassemblies (TOSAs) for transmitting optical signals. TOSAs can include one or more lasers to emit one or more channel wavelengths and associated circuitry for driving the lasers. Some optical applications, such as long-distance communication, can require TOSAs to include hermetically-sealed housings with arrayed waveguide gratings, temperature control devices, laser packages and associated circuitry disposed therein to reduce loss and ensure optical performance. However, the inclusion of hermetically-sealed components increases manufacturing complexity, cost, and raises numerous non-trivial challenges within space-constrained housings.

BRIEF DESCRIPTION OF THE DRAWINGS

These and other features and advantages will be better understood by reading the following detailed description, taken together with the drawings wherein:

FIG. **1** is a block diagram of a multi-channel optical transceiver module, consistent with embodiments of the present disclosure.

FIG. **2** is a perspective view of an optical transceiver module consistent with embodiments of the present disclosure.

FIG. **3** is a side view of the optical transceiver module of FIG. **2** in accordance with an embodiment of the present disclosure.

FIGS. **4-5** collectively show an example TOSA arrangement suitable for use in the optical transceiver module of FIGS. **2-3**, in accordance with an embodiment of the present disclosure.

FIG. **6** is a top view of the example TOSA arrangement of FIGS. **4-5**, consistent with embodiments of the present disclosure.

FIG. **7** shows an enlarged portion of a cavity of the example TOSA arrangement of FIGS. **4-6**, in accordance with an embodiment of the present disclosure.

FIG. **8**A is a side view of the example TOSA arrangement of FIGS. **4-7**, in accordance with an embodiment of the present disclosure.

FIG. **8**B is a cross-sectional view of the example TOSA arrangement of FIG. **5** taken along line **8**B-**8**B, in accordance with an embodiment of the present disclosure.

FIG. **9** is another example TOSA arrangement suitable for use in the optical transceiver module of FIGS. **2-3**, in accordance with an embodiment of the present disclosure.

FIG. **10** shows an existing approach to registering optical power of a laser arrangement.

DETAILED DESCRIPTION

As discussed above, some TOSAs can reach optical transmission distances of up to 10 km or more. Such TOSAs may be suitable for use in C form-factor pluggable (CFP), CFP2, CFP4 and quad small form-factor pluggable (QSFP) applications. In general, such TOSAs include a hermetic-sealed package (or housing) with an LC receptacle (or other suitable port) for optical coupling. The hermetic-sealed package can house laser packages, e.g., electro-absorption modulator integrated lasers (EMLs), power monitors photodiodes (PDs), thermoelectric coolers (TECs), an optical multiplexer such as an arrayed waveguide grating (AWG) for multiplexing multiple channel wavelengths, and electrical interconnects such as flexible printed circuit boards, and optical interconnects such as fiber stubs. Hermetic-sealed packages can include cavities specifically designed to house such components in a manner that optimizes the space constraints and promotes thermal communication. However, manufacturing hermetic-sealed packages with the dimensions necessary to fit the components of the light engine increases manufacturing cost and complexity.

One component in such TOSAs that can result in increased cost and complexity is monitor photodiodes (MPDs). MPDs can be used to monitor optical power of a corresponding laser diode. However, existing approaches tend to position MPDs behind, in front of, or otherwise adjacent an associated laser diode. In some cases, MPDs are mounted to the same substrate as the associated LD. For example, FIG. **10** shows one example of laser arrangement **1000** whereby a sidewall of a TOSA housing **1004** supports a substrate **1002** (or submount), and the substrate **1002** and/or the surface of the TOSA housing **1004** supports LD **1008** and the MPD **1006**. One position utilized for registering optical power from an LD by an MPD **1006** is directly behind the LD **1008** to receive a small portion of optical power **1011** emitted by the LD **1008** backwards away from a transmit (TX) waveguide, e.g., an optical fiber. Another position includes mounting the MPD **1006** below or otherwise in front of the LD **1008** to directly receive the optical power **1010** emitted by the LD **1008**.

In either case, the TOSA housing **1004** must be dimensioned to accommodate the position of the MPD **1006**, with the result being an overall increase in housing length along dimension D. This results in two significant challenges for TOSA designs. First, the position of the MPD, e.g., behind the LD **1008**, can require that interconnect circuitry such as wire bonds **1014** that extend from the laser diode driver (LDD) **1012** to the LD **1008** must be lengthened to route over/around the MPD **1006**. Extending and routing the wire bonds **1014** in this fashion can result in time-of-flight (TOF) delays and impedance matching issues as well as worse RF performance. Second, increasing the overall length can increase the overall volume of the TOSA housing cavity and the complexity in the manufacture of the TOSA. In scenarios where hermetically-sealed housings are utilized, this can result in a significantly higher cost and time per unit to manufacture, which can ultimately reduce yield.

Thus, the present disclosure is generally directed to a multi-channel TOSA with vertically-mounted MPDs to reduce TOSA housing dimensions and improve RF driving signal quality. In more detail, a TOSA housing consistent with the present disclosure includes at least one vertical MPD mounting surface that extends substantially transverse relative to a LD mounting surface, with the result being that a MPD coupled to the vertical MPD mounting surface gets positioned above an associated LD coupled to the LD mounting surface. The vertically-mounted MPD thus makes regions adjacent an LD that would otherwise be utilized to mount an MPD available for patterning of conductive RF traces to provide an RF driving signal to the LD. The conductive RF traces may therefore extend below the vertically-mounted MPD to a location that is proximate the LD to allow for relatively short wire bonds therebetween.

In a specific example embodiment, the vertical MPD mounting surface may be provided at least in part by a feedthrough device of the TOSA housing. The feedthrough device can be configured to be at least partially disposed in a hermetically-sealed cavity of the TOSA housing to provide electrical connectivity to optical components therein. The feedthrough device may also provide a conductive trace mounting surface that extends substantially transverse relative to the vertical MPD mounting surface for purposes of patterning the above-discussed conductive RF traces. Accordingly, an MPD may be securely mounted to the feedthrough device prior to insertion of the feedthrough device into a TOSA housing. Likewise, the conductive RF traces and other associated circuitry (e.g., filtering capacitors, conductive direct current (DC) traces, and so on) may be patterned/disposed when the feedthrough device is outside of the TOSA housing. Thus, insertion of the feedthrough device within the TOSA housing can result in the vertically-mounted MPD being passively optically aligned with an associated LD, and the conductive RF traces being brought within a predefined distance of the LD for electrical coupling purposes via, for instance, wire bonds.

The present disclosure therefore provides numerous advantageous over other TOSA approaches. For example, manufacturing of a TOSA may be conducted in a modular fashion whereby a feedthrough device and TOSA housing may be manufactured and configured separate from each other. For instance, components such as conductive traces and MPDs may be mounted/coupled to the feedthrough device in a parallel manufacturing process to allow for the TOSA housing and associated components to be completed apart from the feedthrough device, with the net result decreasing production time, reducing errors, and ultimately increasing yield. In addition, a TOSA housing with vertically-mounted MPDs consistent with the present disclosure advantageously reduces overall housing dimensions while allowing for LDs to be disposed in close proximity of conductive traces for electrical coupling purposes. RF signal quality may therefore be enhanced via relatively short wire bonds, for example, while simultaneously reducing cost, time-per-unit, and complexity to manufacture each TOSA.

As used herein, the terms hermetic-sealed and hermetically-sealed may be used interchangeably and refer to a housing that releases a maximum of about 5*10−8 cc/sec of filler gas. The filler gas may comprise an inert gas such as nitrogen, helium, argon, krypton, xenon, or various mixtures thereof, including a nitrogen-helium mix, a neon-helium mix, a krypton-helium mix, or a xenon-helium mix.

As used herein, "channel wavelengths" refer to the wavelengths associated with optical channels and may include a specified wavelength band around a center wavelength. In one example, the channel wavelengths may be defined by an International Telecommunication (ITU) standard such as the ITU-T dense wavelength division multiplexing (DWDM) grid. This disclosure is equally applicable to coarse wavelength division multiplexing (CWDM). In one specific example embodiment, the channel wavelengths are implemented in accordance with local area network (LAN) wavelength division multiplexing (WDM), which may also be referred to as LWDM.

The term "coupled" as used herein refers to any connection, coupling, link or the like and "optically coupled" refers to coupling such that light from one element is imparted to another element. Such "coupled" devices are not necessarily directly connected to one another and may be separated by intermediate components or devices that may manipulate or modify such signals. On the other hand, the term "direct optical coupling" refers to an optical coupling via an optical path between two elements that does not include such intermediate components or devices, e.g., a mirror, waveguide, and so on, or bends/turns along the optical path between two elements.

The term substantially, as generally referred to herein, refers to a degree of precision within acceptable tolerance that accounts for and reflects minor real-world variation due to material composition, material defects, and/or limitations/peculiarities in manufacturing processes. Such variation may therefore be said to achieve largely, but not necessarily wholly, the stated characteristic. To provide one non-limiting numerical example to quantify "substantially," minor variation may cause a deviation of up to and including ±5% from a particular stated quality/characteristic unless otherwise provided by the present disclosure.

Referring to the Figures, FIG. **1**, an optical transceiver **100**, consistent with embodiments of the present disclosure, is shown and described. In this embodiment, the optical transceiver **100** includes a multi-channel TOSA arrangement and a multi-channel ROSA arrangement **106** coupled to a substrate **102**, which may also be referred to as an optical module substrate. The substrate **102** may comprise, for example, a printed circuit board (PCB) or PCB assembly (PCBA). The substrate **102** may be configured to be "pluggable" for insertion into an optional transceiver cage **109**.

In the embodiment shown, the optical transceiver **100** transmits and receives four (4) channels using four different channel wavelengths ($\lambda 1$, $\lambda 2$, $\lambda 3$, $\lambda 4$) via the multi-channel TOSA arrangement **104** and the multi-channel ROSA arrangement **106**, respectively, and may be capable of transmission rates of at least about 25 Gbps per channel. In one example, the channel wavelengths $\lambda 1$, $\lambda 2$, $\lambda 3$, $\lambda 4$ may be 1270 nm, 1290 nm, 1310 nm, and 1330 nm, respectively. Other channel wavelengths are within the scope of this disclosure including those associated with local area network (LAN) wavelength division multiplexing (WDM). The optical transceiver **100** may also be capable of transmission distances of 2 km to at least about 10 km. The optical transceiver **100** may be used, for example, in Internet data center applications or fiber to the home (FTTH) applications. Although the following examples and embodiments show and describe a 4-channel optical transceiver, this disclosure is not limited in this regard. For example, the present disclosure is equally applicable to 2, 6, or 8-channel configurations.

In more detail, the multi-channel TOSA arrangement **104** includes a TOSA housing **114** with a plurality of sidewalls that define an optical component cavity **220**, which may be referred to as simply a cavity (See FIG. **4**). The cavity **220** includes a plurality of laser arrangements **110** disposed

therein, which will be discussed in more detail below, with each laser arrangement of the plurality of laser arrangements **110** being configured to transmit optical signals having different associated channel wavelengths. Each laser arrangement may include passive and/or active optical components such as a laser diode (LD), monitor photodiode (MPD), laser diode driver (LDD), and so on. Additional components comprising each laser arrangement include filters, focusing lenses, filtering capacitors, and so on.

To drive the plurality of laser arrangements **110**, the optical transceiver **100** includes a transmit connecting circuit **112** to provide electrical connections to the plurality of laser arrangements **110** within the housing **114**. The transmit connecting circuit **112** may be configured to receive driving signals (e.g., TX_D**1** to TX_D**4**) from, for example, circuitry within the optical transceiver cage **109**. As shown, the housing **114** may be hermetically sealed to prevent ingress of foreign material, e.g., dust and debris. Therefore, a plurality of transit (TX) traces **117** (or electrically conductive paths) are patterned on at least one surface of the substrate **102** and are electrically coupled with a feedthrough device **116** of the TOSA housing **114** to bring the transmit connecting circuit **112** into electrical communication with the plurality of laser arrangements **110**, and thus, electrically interconnect the transmit connecting circuit **112** with the multi-channel TOSA arrangement **104**. The feedthrough device **116** may comprise, for instance, ceramic, metal, or any other suitable material.

In operation, the multi-channel TOSA arrangement **104** may then receive driving signals (e.g., TX_D**1** to TX_D**4**), and in response thereto, generates and launches multiplexed channel wavelengths on to an output waveguide **120** such as a transmit optical fiber. The generated multiplexed channel wavelengths may be combined based on a multiplexing device **124** such as an arrayed waveguide grating (AWG) that is configured to receive emitted channel wavelengths **126** from the plurality of laser assemblies **110** and output a signal carrying the multiplexed channel wavelengths on to the output waveguide **120** by way of optical fiber receptacle **122**.

Continuing on, the multi-channel ROSA arrangement **106** includes a demultiplexing device **124**, e.g., an arrayed waveguide grating (AWG), a photodiode (PD) array **128**, and an amplification circuitry **130**, e.g., a transimpedance amplifier (TIA). An input port of the demultiplexing device **124** may be optically coupled with a receive waveguide **134**, e.g., an optical fiber, by way of an optical fiber receptacle **136**. An output port of the demultiplexing device **124** may be configured to output separated channel wavelengths on to the PD array **128**. The PD array **128** may then output proportional electrical signals to the TIA **130**, which then may be amplified and otherwise conditioned. The PD array **128** and the transimpedance amplifier **136** detect and convert optical signals received from the receive waveguide **134**, e.g., an optical fiber, into electrical data signals (RX_D**1** to RX_D**4**) that are output via the receive connecting circuit **108**. In operation, the PD array **128** may then output electrical signals carrying a representation of the received channel wavelengths to a receive connecting circuit **132** by way of conductive traces **119** (which may be referred to as conductive paths).

Referring now to FIGS. **2-3**, an example optical transceiver module **200** is shown consistent with an embodiment of the present disclosure. The optical transceiver module **200** may be implemented as the optical transceiver **100** of FIG. **1**, the discussion of which is equally applicable to FIGS. **2-3** and will not be repeated for purposes of brevity. As shown, the optical transceiver module **200** includes a substrate **202** that extends from a first end **252** to a second end **254** along a longitudinal axis **250**. The first end **252** may electrically couple to a transceiver cage to receive driving signals, e.g., TX_D**1** to TX_D**4**, and therefore, may be referred to as an electrical coupling end. On the other hand, the second end **254** includes a multi-channel TOSA arrangement **204** and a multi-channel ROSA arrangement **206** for sending and receiving channel wavelengths, respectively, and therefore may be referred to as an optical coupling end.

In more detail, the substrate includes at least a first mounting surface **256** for mounting of optical components, patterning of conductive traces (e.g., conductive traces **117**, **119**). Disposed adjacent the first end **252**, the substrate **202** includes a plurality of pads/terminals for electrically communicating with, for instance, associated circuitry in a transceiver cage. The substrate **202** includes a multi-channel TOSA arrangement **204** and multi-channel ROSA arrangement **206** disposed adjacent the second end. The multi-channel ROSA arrangement includes amplification circuitry **230**, a PD array **228**, and a demultiplexing device **224** disposed thereon. An input port **235** of the demultiplexing device **224** may be coupled to an optical coupling receptacle **236** by way of a receive intermediate fiber **268**. Accordingly, the demultiplexing device **224** can receive a multiplexed signal **264** from a receive waveguide, e.g., the receive waveguide **134** of FIG. **1**. An output port of the demultiplexing device **224** may be optically aligned with the PD array **228** and output separated channel wavelengths thereon. Electrical signals representative of the separated channel wavelengths may then be amplified/filtered by the amplification circuitry before being passed to the receive connecting circuit **132**.

As shown, the TOSA housing **214** is defined by a plurality of sidewalls. A first end **258** of the TOSA housing edge mounts to, and electrically couples with, the second end **258** of the substrate **202**. A second end **259** of the TOSA housing **214** couples to an optical coupling receptacle **222** by way of a transmit intermediate fiber **269**. The first end **258** of the TOSA housing **214** may also be referred to as an electrical coupling end, and the second end **259** may also be referred to as an optical coupling end. In an embodiment, the TOSA housing **214** may be securely attached to the substrate **202** via one or more electrical interconnect devices as discussed and described in greater detail in co-pending U.S. patent application. Ser. No. 16/116,087 filed on Aug. 29, 2018 and entitled "Transmitter Optical Subassembly with Hermetically-Sealed Light Engine and External Arrayed Waveguide Grating", the teaching of which are hereby incorporated in their entirety.

In an embodiment, the TOSA housing **214** of the multi-channel TOSA arrangement **204** may be hermetically sealed, although in other embodiments the housing may not necessarily be hermetically sealed. Accordingly, the multi-channel TOSA arrangement **204** may also be referred to as a hermetically-sealed light engine that may be particularly well suited for long-distance transmission, e.g., up to and beyond 10 km. The TOSA housing **214** can include a feedthrough device **262** at least partially disposed in a cavity of the TOSA housing **214** to allow for electrical interconnection between the substrate **202** and the multi-channel TOSA arrangement **204**. The housing **214** may include a longitudinal axis that extends substantially parallel relative to the longitudinal axis **250** of the substrate **202**. The housing **214** may comprise, for example, metal, plastic, ceramic, or any other suitable material. The housing **214** may be formed from multiple pieces, or a single piece, of material.

The housing **214** may further define a laser cavity **220** (FIG. **4**) which may be filled with an inert gas to form an inert atmosphere. In one embodiment, the inert atmosphere sealed within the hermetically-sealed container comprises nitrogen, and preferably, 1 atmosphere (ATM) of nitrogen. The inert atmosphere may also be formed from nitrogen, helium, argon, krypton, xenon, or various mixtures thereof, including a nitrogen-helium mix, a neon-helium mix, a krypton-helium mix, or a xenon-helium mix. The inert gas or gas mix included within the hermetically-sealed cavity **220** may be selected for a particular refractive index or other optical property. Gases may also be selected based on their ability to promote thermal insulation. For instance, Helium is known to promote heat transfer may be utilized alone or in addition to others of the aforementioned gases. In any event, the terms hermetic-sealed and hermetically-sealed may be used interchangeably and refers to a housing that releases a maximum of about 5*10−8 cc/sec of filler gas.

Turning to FIGS. **4-7**, an example embodiment of the TOSA housing **214** of the multi-channel TOSA arrangement **204** is shown in isolation. As shown, the housing **214** extends from a first end **452** to a second end **454** along a longitudinal axis **450**. A plurality of sidewalls **214-1** to **214-6** define the TOSA housing **214** and a cavity **220** therebetween. Note, the embodiment shown in FIG. **4** omits the sidewall **214-6** (FIG. **2**) that forms a cover portion merely for purposes of clarity.

The feedthrough device **262** at least partially defines the first end **452** of the TOSA housing **214** and includes a plurality of electrical interconnects **464**, e.g., bus bars, external to the cavity **220** for mounting to and electrically coupling with the substrate **102**. The plurality of electrical interconnects **464** can provide power and radio frequency (RF) driving signals to the plurality of laser arrangements **210**. The feedthrough device **262** further includes at least one mounting surface such as a vertical monitor photodiode (MPD) mounting surface, which will be discussed in greater detail below.

Following the feedthrough device **262** within the cavity **220**, a plurality of laser arrangements **210** are disposed on and are supported by a mounting surface provided at least in part by the sidewall **214-4**. A multiplexing device **224** is also disposed on and supported by the mounting surface provided at least by the sidewall **214-4**. The multiplexing device **224** includes a plurality of input ports **456**, with each input port being optically aligned with an associated laser arrangement of the plurality of laser arrangements **210**. The multiplexing device **224** further includes an output port **458** which is shown more clearly in FIG. **6**. The output port **458** of the multiplexing device **224** is optically aligned with an aperture **462** defined by the sidewall **214-3** of the TOSA housing **214**. The aperture **462** may then transition to a fiber coupling receptacle **462**, with the fiber coupling receptacle **462** being configured to receive the intermediate optical fiber **269** (FIG. **2**).

Thus, in operation, the multiplexing device **224** receives channel wavelengths **466** emitted by the plurality of laser assemblies along direction D**1** at the plurality of inputs and then outputs a multiplexed signal **468** having each of the emitted channel wavelengths **466** for transmission via an external transmit optical fiber, for example.

FIG. **7** shows an enlarged perspective view of the cavity **220** of the housing **214** in accordance with an embodiment. As shown, the feedthrough device **262** includes a step/shoulder configuration defined by a first mounting surfacing **702** that extends in parallel with the longitudinal axis **450** of the TOSA housing **214**, a second mounting surface **704** that extends parallel with the first mounting surface, and a third mounting surface **706** that adjoins the first and second mounting surfaces **702**, **704** and extends substantially transverse to each of the same. Thus, the first, second and third mounting surfaces **702**, **704** and **706** provide a multi-tiered or multi-step mounting structure for coupling to optical components. Each of the mounting surfaces of the feedthrough device **262** will now be discussed in turn.

The first mounting surface **702** includes a first plurality of conductive traces/paths **708** patterned thereon. The first plurality of conductive traces **708** may be configured to provide power from the substrate **202** and to pass data signals from a plurality of MPDs **712** that are mounted to and supported by the third mounting surface. To this end, the first mounting surface **702** may also be referred to as a MPD trace mounting surface/section. The second mounting surface **704** includes a second plurality of conductive traces/paths **711** disposed thereon. The second plurality of conductive traces/paths **711** may be configured to provide power and data signals from the substrate **202** to each of the plurality of lasers arrangements **210**. To this end, the second mounting surface **704** may be referred to as a LD trace mounting surface/section.

Continuing on, the third mounting surface **706** extends substantially transverse relative to the first and second mounting surfaces **702**, **704** and adjoins the same, as discussed above. The third mounting surface **706** may be configured to mount and support a plurality of MPDs shown collectively as **712** and individually as **712-1** to **712-4**. Each MPD of the plurality of MPDs **712** may be supported by a MPD submount **714**, with the MPD submount **714** providing electrical traces for electrically interconnecting MPDs to associated conductive traces of the MPD trace mounting section **708**. The MPD submount **714** may be a single piece, e.g., a single PCB or other suitable substrate, or may be multiple pieces. One advantage of a single piece MPD submount **714** is that attachment and alignment of MPDs to the feedthrough device **262** can be simplified as each MPD may be placed on to the MPD submount **714** at predefined positions prior to insertion of the feedthrough device **262** into the cavity **202** of the housing **214**. Accordingly, coupling the MPD submount **714** to the feedthrough device **262** optically aligns each of the MPDs disposed thereon without necessarily performing additional alignment steps.

As further shown, each MPD of the plurality of MPDs **712** includes a light receiving region, e.g., light receiving surface **716-4** of MPD **712-4** shown in FIG. **8**B, on an upper/top surface of each chip that is optically aligned with a corresponding laser arrangement of the plurality of laser arrangements **210**. This vertical mounting of each MPD allows for a smaller overall footprint for the feedthrough device **262**, and by extension, shortens the overall length of the TOSA housing **214**. This vertical mounting configuration achieves housing size reduction by freeing the space behind/adjacent each laser arrangement to permit the LD traces of the second mounting surface **704** to extend below the plurality of MPDs **712** and be disposed in close proximity of the plurality of laser assemblies **201**. This removal of the MPDs from being behind/adjacent a corresponding laser arrangement also advantageously allows for relatively short electrical interconnection via wire bonding between the LD traces of the second mounting surface **704** and each laser arrangement, which reduces issues such as time of flight (TOF) and impedance mismatching that can ultimately degrade RF signal quality.

Continuing on, each of the plurality of laser arrangements **210** includes a laser diode supported by a laser submount

213 and optional thermoelectric cooling (TEC) arrangement. For instance, the laser arrangement **210-4** associated with channel **4** (CH**4**) includes a laser diode **211-4** mounted to and supported by the laser diode submount **213**. As shown in the cross-sectional view of FIG. **8**B, the laser diode submount **213** is mounted to and is supported by TEC devices **720**. In turn, TEC devices **720** are mounted to and supported by a surface provided by sidewall **214-4** of the TOSA housing **214**. The laser diode submount may also support thermistors such as thermistor **724-4** (FIG. **7**). Following the plurality of laser assemblies **210**, each laser arrangement can include a focusing lens e.g., focusing lens **726-4**, mounted to and supported by the laser diode submount **713**. The laser submount **213** may comprise a single piece, such as shown, or may be formed from multiple pieces.

Following the plurality of laser arrangements **210**, the multiplexing device **224** is mounted to and is supported by a multiplexing submount **720**. The input ports **456** of the multiplexing device **224** are optically aligned with the plurality of laser arrangements **210**. To this end, a plurality of optical paths **850** extend longitudinally through the cavity **220**, with each optical path extending from a corresponding laser diode. A portion of optical power, e.g., 2% or less, gets emitted from a surface opposite the emission face of each LD (also known as a back-side emission surface) and is registered by each MPD, e.g., converted to a proportional electrical current, to form a feedback loop to ensure optical power. Thus, each of the plurality of optical paths **850** also intersects with the vertically mounted MPDs **712**, and more particularly, a light receiving region of each corresponding vertically mounted MPDs **712**, e.g., light receiving region **716-4**.

During operation, channel wavelengths emitted by each of the plurality of laser assemblies **210** is launched on to a corresponding path of the plurality of optical paths **850**, with each of the plurality of optical paths **850** extending substantially parallel relative to each other. As discussed above, a portion of the optical power gets emitted from a surface opposite of the emission surface of each laser diode, which may be referred to as a back-side emission surface, thus launching a portion of optical power towards the MPDs **712**. Each light receiving region of the MPDs, e.g., light receiving region **716-4**, then registers this portion of optical power for purposes of providing a feedback loop, e.g., by converting optical power to a proportional electrical current. The emitted channel wavelengths then get received via input ports **456** of the multiplexing device **224**. The multiplexing device **224** then combines the received channel wavelengths into a multiplexed optical signal **263** (see FIG. **2**). At an output **458** of the multiplexing device **224** the multiplexed signal **263** is output via the aperture on to the intermediate optical fiber **269** (See FIG. **2**), and then ultimately to an external transmit optical fiber (not shown).

FIG. **9** shows another example embodiment of a TOSA housing **204'** in accordance with aspects of the present disclosure. As shown, the TOSA housing **204'** includes a plurality of sidewalls to provide a cavity therebetween, which is substantially similar to that of the TOSA housing **204**. However, the TOSA housing **204'** does not include a multiplexing device within the cavity and instead couples to a first end of a plurality of waveguides (not shown), e.g., optical fibers, via apertures **480-1** to **480-4**. A second end of the plurality of waveguides may be optically coupled to an external multiplexing device, such as an AWG. This allows the TOSA **204'** to have a relatively small overall footprint, which can significantly reduce overall costs and complexity that characterizes hermetically-sealed housing. Put simply, the lesser the volume and number of passive/optical components within the cavity of the TOSA housing **204'**, the less the complexity, time and cost necessary to manufacture the TOSA housing **204'**. The feedthrough device **262'** may be configured substantially similar to that of the feedthrough device **262**, the description of which is equally applicable to the embodiment of FIG. **9** but will not be repeated for brevity. For instance, the vertical MPD mounting surface **490** allows for MPDs to be mounted thereon to advantageously reduce the overall length of the TOSA housing **204'** relative to other approaches that place MPDs behind or otherwise adjacent corresponding LDs.

In accordance with an aspect of the present disclosure a transmitter optical subassembly (TOSA) module is disclosed. The TOSA module comprising a laser diode (LD) mounting surface, at least a first LD disposed on the LD mounting surface, the first LD having a back-side emission surface for emitting a portion of optical power along a first optical path, a base portion providing a vertical MPD mounting surface, and a first MPD disposed on the vertical MPD mounting surface, the first MPD having a light receiving region optically aligned with the first LD via the first optical path based at least in part on the vertical MPD mounting surface extending substantially transverse relative to the LD mounting surface such that the first optical path intersects with the light receiving region of the first MPD.

In accordance with another aspect of the present disclosure a method for optically coupling monitor photodiodes (MPDs) to corresponding laser diodes (LDs) in a multi-channel optical transceiver (TOSA) housing is disclosed. The method comprising mounting at least one MPD to a vertical MPD mounting surface provided by a feedthrough device, patterning a plurality of conductive traces on to one or more surfaces of the feedthrough device, and inserting the feedthrough device into a cavity of the TOSA housing to bring the plurality of conductive traces into close proximity with the LDs in the TOSA, wherein inserting the feedthrough device into the cavity causes each of the at least one MPDs mounted to the vertical MPD mounting surface to optically couple with a back-side emission surface of each corresponding LD.

In accordance with yet another aspect of the present disclosure a multi-channel optical transceiver module is disclosed. The multi-channel optical transceiver including a printed circuit board assembly (PCBA), a transmitter optical subassembly (TOSA) arrangement coupled to the PCBA, the TOSA arrangement comprising a laser diode (LD) mounting surface, at least a first LD disposed on the LD mounting surface, the first LD having a back-side emission surface for emitting a portion of optical power along a first optical path, a base portion providing a vertical MPD mounting surface, a first MPD disposed on the vertical MPD mounting surface, the first MPD having a light receiving region optically aligned with the first LD via the first optical path based at least in part on the vertical MPD mounting surface extending substantially transverse relative to the LD mounting surface such that the first optical path intersects with the light receiving region of the first MPD.

While the principles of the disclosure have been described herein, it is to be understood by those skilled in the art that this description is made only by way of example and not as a limitation as to the scope of the disclosure. Other embodiments are contemplated within the scope of the present disclosure in addition to the exemplary embodiments shown and described herein. Modifications and substitutions by one of ordinary skill in the art are considered to be within the

scope of the present disclosure, which is not to be limited except by the following claims.

What is claimed is:

1. A transmitter optical subassembly (TOSA) module, the TOSA module comprising:

a laser diode (LD) mounting surface;

at least a first LD disposed on the LD mounting surface, the first LD having a back-side emission surface for emitting a portion of optical power along a first optical path;

a base portion comprising a feedthrough device, the feedthrough device providing a vertical MPD mounting surface; and

a first MPD disposed on the vertical MPD mounting surface, the first MPD having a light receiving region optically aligned with the first LD via the first optical path based at least in part on the vertical MPD mounting surface extending substantially transverse relative to the LD mounting surface such that the first optical path intersects with the light receiving region of the first MPD.

2. The TOSA module of claim 1, further comprising:

a housing having a plurality of sidewalls that define a cavity, the LD mounting surface being disposed in the cavity; and

wherein the feedthrough device is configured to at least partially be disposed in the cavity of the housing, and wherein a first end of the feedthrough device provides an electrical coupling region to electrically couple to an optical module substrate to receive a radio frequency (RF) driving signal to drive the first LD, and a second end of the feedthrough device defines the vertical MPD mounting surface, the vertical MPD mounting surface being disposed in the cavity.

3. The TOSA module of claim 2, wherein the cavity of the housing is hermetically sealed to prevent ingress of contaminants.

4. The TOSA module of claim 2, wherein at least one sidewall of the plurality of sidewalls of the housing provides a thermoelectric cooler (TEC) mounting section, and wherein the TOSA provides:

a thermoelectric cooler (TEC) arrangement mounted to the TEC mounting section; and

a LD submount disposed on the TEC arrangement, the LD submount being in thermal communication with the TEC arrangement, and wherein the LD submount provides the LD mounting surface.

5. The TOSA module of claim 1, further comprising a plurality of transmit (TX) radio frequency (RF) traces, the TX RF traces being disposed on a surface of the base that extends away from the vertical mounting surface along a direction that is substantially parallel with the LD mounting surface.

6. The TOSA module of claim 5, wherein the plurality of TX RF traces are disposed below the MPD when mounted to the vertical MPD mounting surface to allow the plurality of TX RF traces to extend towards the LD mounting surface, and wherein a portion of the plurality of TX RF traces are disposed adjacent the LD mounting surface.

7. The TOSA module of claim 1, further comprising a second LD disposed on the LD mounting surface and a second MPD disposed on the vertical MPD mounting surface, the second LD being configured to emit an associated channel wavelength different from that of the first LD, and wherein the second LD and second MPD are optically aligned via a second optical path such that the second optical path extends from a back-side emission surface of the second LD and intersects with a light receiving region of the second MPD.

8. The TOSA module of claim 7, further comprising a multiplexing arrangement, the multiplexing arrangement having at least first and second input ports optically aligned with the first and second optical paths, respectively, to receive and combine channel wavelengths emitted by the first and second LDs into a multiplexed optical signal for output via an output port.

9. The TOSA module of claim 8, wherein the multiplexing arrangement includes an arrayed waveguide grating AWG to multiplex the received channel wavelengths, and wherein AWG provides the output port and passes the multiplexed optical signal on to a transmit waveguide coupled to the output port.

10. The TOSA module of claim 8, wherein the first and second input ports of the multiplexing arrangement are angled relative to the light emitting region of the first and second LDs such that incident channel wavelengths received along the first and second optical paths intersect at an angle of about 8 degrees to prevent back reflection.

11. A method for optically coupling monitor photodiodes (MPDs) to corresponding laser diodes (LDs) in a multi-channel optical transceiver (TOSA) housing, the method comprising:

mounting at least one MPD to a vertical MPD mounting surface provided by a feedthrough device;

patterning a plurality of conductive traces on to one or more surfaces of the feedthrough device; and

inserting the feedthrough device into a cavity of the TOSA housing to bring the plurality of conductive traces into close proximity with the LDs in the TOSA, wherein inserting the feedthrough device into the cavity causes each of the at least one MPDs mounted to the vertical MPD mounting surface to optically couple with a back-side emission surface of each corresponding LD.

12. The method of claim 11, further comprising introducing an inert gas into the cavity to form a hermetic seal.

13. The method of claim 11, further comprising introducing wire bonds between the LDs and the plurality of conductive traces after insertion of the feedthrough device into the cavity of the TOSA housing.

14. The method of claim 11, wherein patterning the plurality of conductive traces includes disposing each conductive trace of the plurality of conductive traces on to a surface that extends below the vertical MPD mounting surface.

15. A multi-channel optical transceiver module comprising:

a printed circuit board assembly (PCBA);

a multi-channel transmitter optical subassembly (TOSA) arrangement coupled to the PCBA, the TOSA arrangement comprising:

a laser diode (LD) mounting surface;

at least a first LD disposed on the LD mounting surface, the first LD having a back-side emission surface for emitting a portion of optical power along a first optical path;

a base portion comprising a feedthrough device, the feedthrough device providing a vertical MPD mounting surface;

a first MPD disposed on the vertical MPD mounting surface, the first MPD having a light receiving region optically aligned with the first LD via the first optical path based at least in part on the vertical MPD

mounting surface extending substantially transverse relative to the LD mounting surface such that the first optical path intersects with the light receiving region of the first MPD; and

a multi-channel receiver optical subassembly arrangement.

16. The multi-channel optical transceiver of claim **15**, wherein the TOSA arrangement further comprises:

a TOSA housing having a plurality of sidewalls that define a cavity, the LD mounting surface being disposed in the cavity; and

wherein the feedthrough device is configured to at least partially be disposed in the cavity of the TOSA housing, and wherein a first end of the feedthrough device provides an electrical coupling region to electrically couple to an optical module substrate to receive a radio frequency (RF) driving signal to drive the first LD, and a second end of the feedthrough device defines the vertical MPD mounting surface, the vertical MPD mounting surface being disposed in the cavity of the TOSA housing.

17. The multi-channel optical transceiver of claim **16**, wherein the cavity of the TOSA housing is hermetically sealed to prevent ingress of contaminants.

18. The multi-channel optical transceiver of claim **16**, wherein at least one sidewall of the plurality of sidewalls of the TOSA housing provides a thermoelectric cooler (TEC) mounting section, and wherein the TOSA provides:

a thermoelectric cooler (TEC) arrangement mounted to the TEC mounting section; and

a LD submount disposed on the TEC arrangement, the LD submount being in thermal communication with the TEC arrangement, and wherein the LD submount provides the LD mounting surface.

19. The multi-channel optical transceiver of claim **15**, further comprising a plurality of transmit (TX) radio frequency (RF) traces, the TX RF traces being disposed on a surface of the base portion that extends away from the vertical mounting surface along a direction that is substantially parallel with the LD mounting surface, and wherein the TX RF traces are disposed below the MPD when mounted to the vertical MPD mounting surface to allow the TX RF traces to extend towards the LD mounting surface.

* * * * *