US009385830B2

(12) **United States Patent**
Sato

(10) **Patent No.: US 9,385,830 B2**
(45) **Date of Patent: Jul. 5, 2016**

(54) **TRANSMITTER MODULE OUTPUTTING WAVELENGTH MULTIPLEXED LIGHT**

(71) Applicant: **Sumitomo Electric Industries, Ltd.**, Osaka-shi (JP)

(72) Inventor: **Shunsuke Sato**, Yokohama (JP)

(73) Assignee: **Sumitomo Electric Industries, Ltd.**, Osaka-shi (JP)

(*) Notice: Subject to any disclaimer, the term of this patent is extended or adjusted under 35 U.S.C. 154(b) by 0 days.

(21) Appl. No.: **14/534,956**

(22) Filed: **Nov. 6, 2014**

(65) **Prior Publication Data**

US 2015/0132001 A1 May 14, 2015

(30) **Foreign Application Priority Data**

Nov. 8, 2013 (JP) 2013-232092

(51) **Int. Cl.**
H04B 10/04 (2006.01)
H04J 14/02 (2006.01)
H04B 10/50 (2013.01)

(52) **U.S. Cl.**
CPC ***H04J 14/02*** (2013.01); ***H04B 10/504*** (2013.01); ***H04B 10/506*** (2013.01)

(58) **Field of Classification Search**
CPC .. H04B 10/503; H04B 10/504; H04B 10/506; H04J 14/02
USPC 398/182
See application file for complete search history.

(56) **References Cited**

U.S. PATENT DOCUMENTS

6,590,916 B2 * 7/2003 Eden H01S 5/4031 327/108
6,816,529 B2 * 11/2004 Vail H01S 5/4025 372/38.02
7,274,343 B2 * 9/2007 Kim G09G 3/2965 315/169.1
8,346,037 B2 1/2013 Pezeshki et al.
2012/0269522 A1 * 10/2012 Kagaya H01P 3/026 398/183

* cited by examiner

Primary Examiner — M. R. Sedighian
(74) *Attorney, Agent, or Firm* — Venable LLP; Michael A. Sartori; Laura G. Remus

(57) **ABSTRACT**

A transmitter module having a plurality of semiconductor laser diodes (LDs) as optical signal sources that emit optical respective optical beams with specific wavelengths different from other is disclosed. The transmitter module includes, in addition to the LDs, a driver to drive LDs in the shunt-driving configuration. Inductors through which the bias currents for the LDs are provided are mounted on the driver as interposing a spacer and a top carrier.

15 Claims, 16 Drawing Sheets

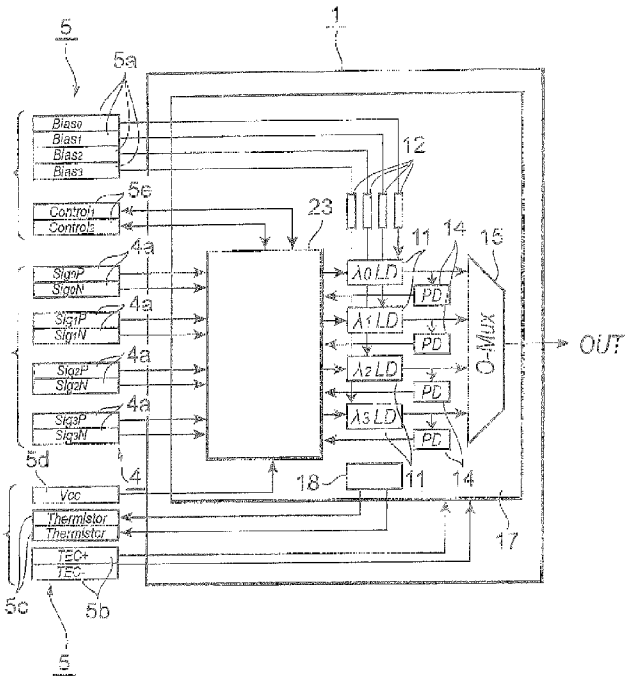

EOPTOLINK-1005
Eoptolink v. Applied Optoelectronics
IPR2026-00122

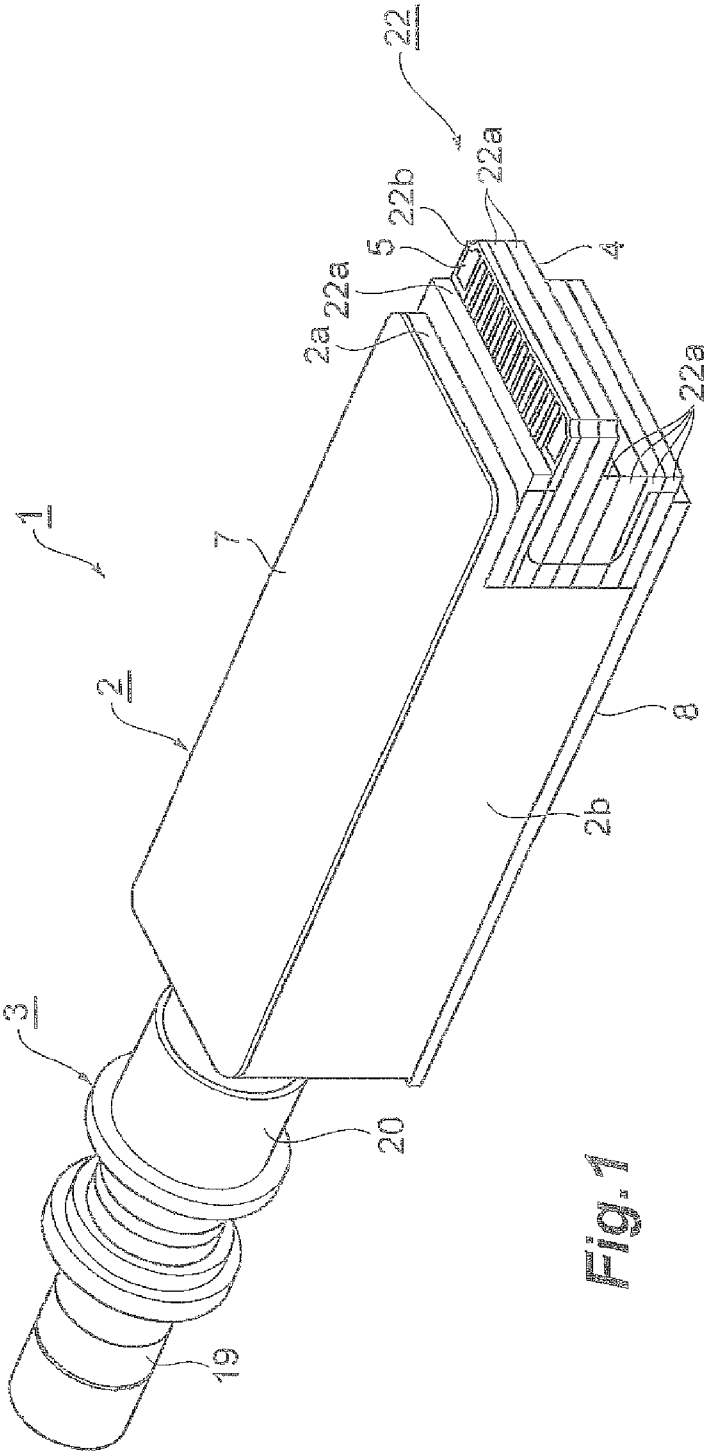

Fig. 1

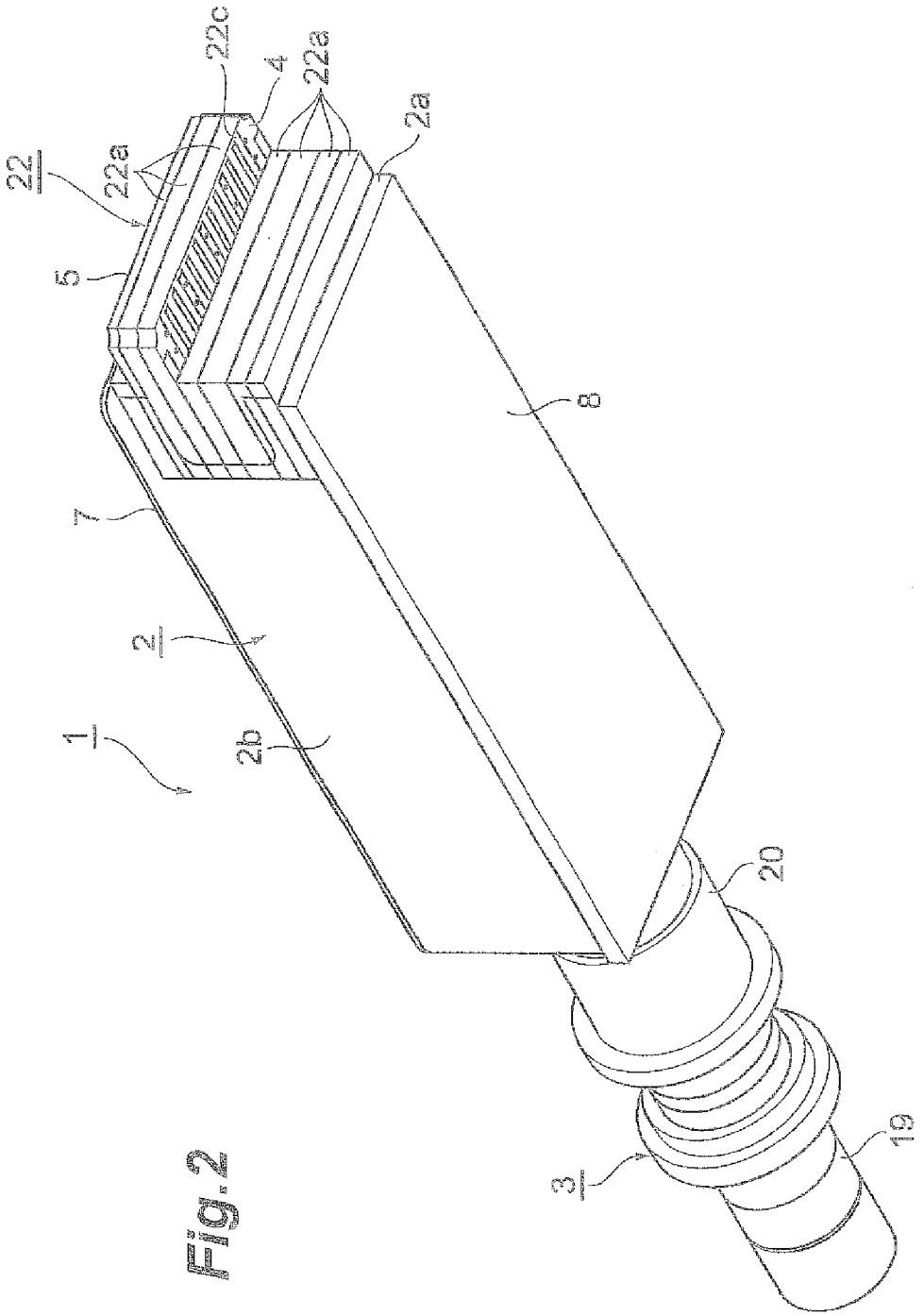

Fig. 2

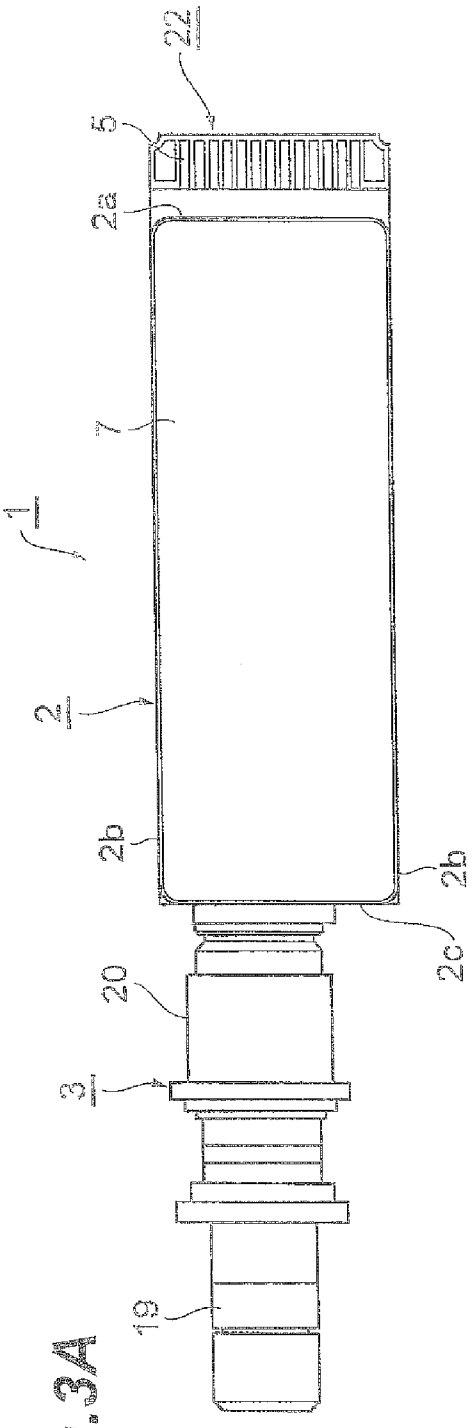

Fig. 3A

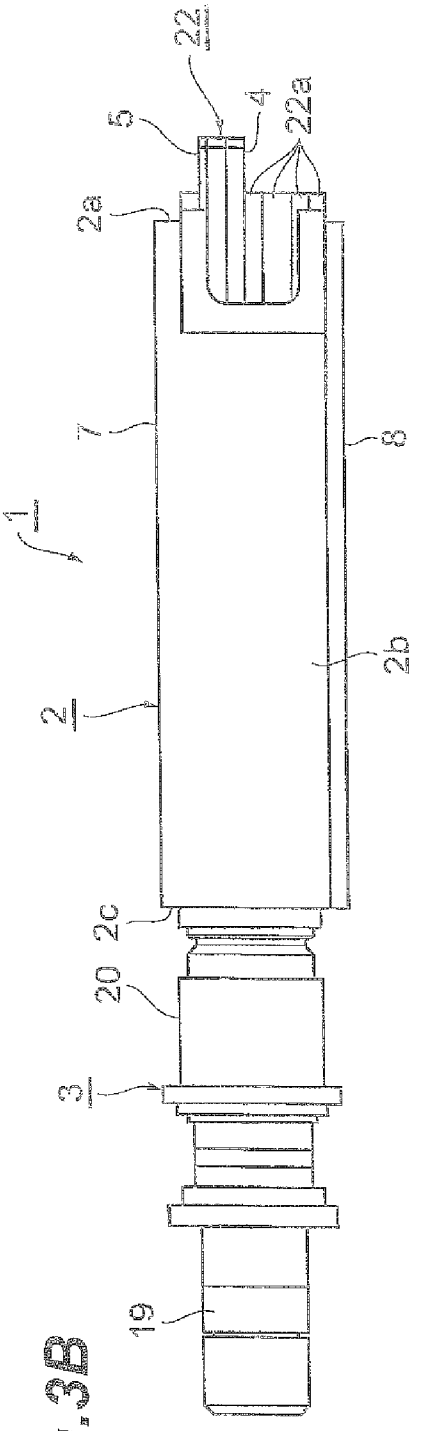

Fig. 3B

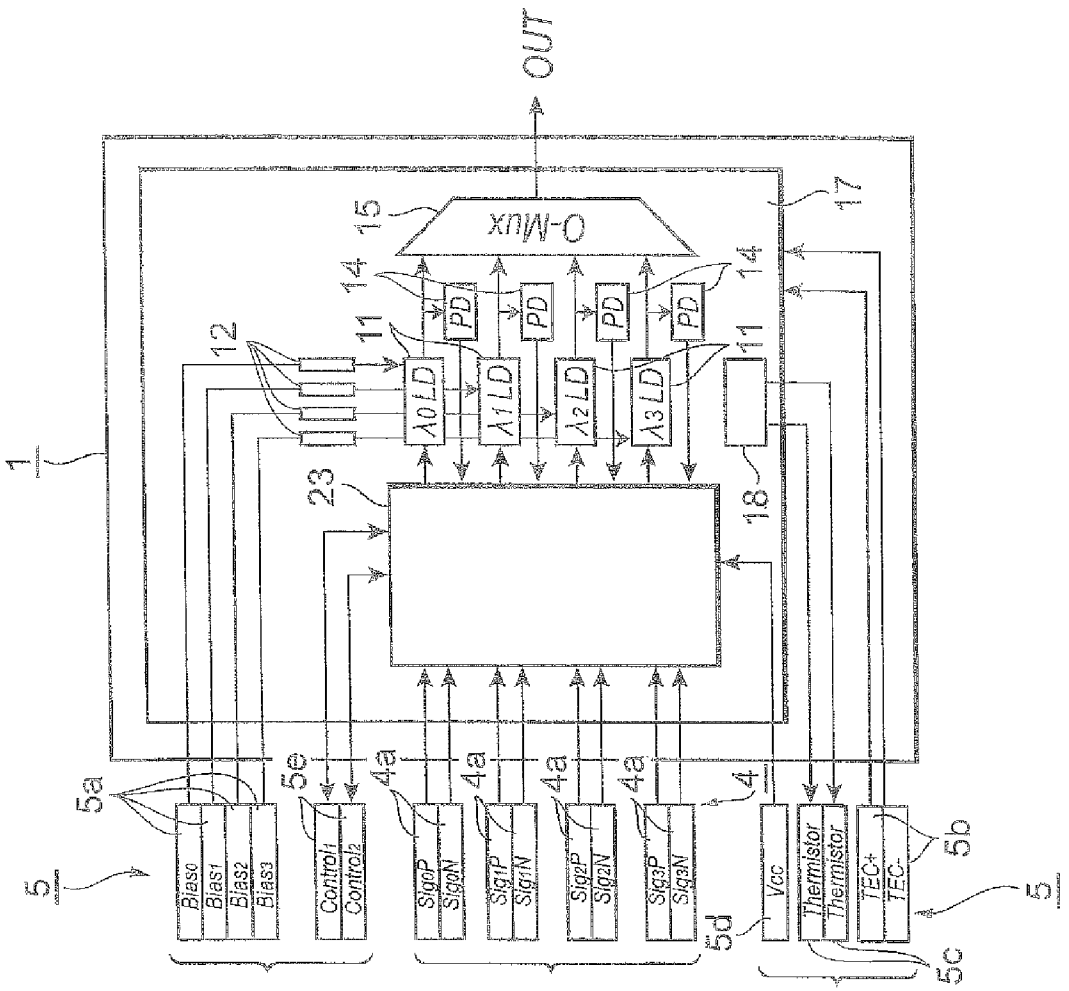
OUT
O-Mux
15
17
14
14
PD
PD
PD
PD
12
11
11
λ0 LD
λ1 LD
λ2 LD
λ3 LD
1
23
18
5a
5e
4a
4a
4a
4a
4
5
Bias0
Bias1
Bias2
Bias3
Control1
Control2
Sig0P
Sig0N
Sig1P
Sig1N
Sig2P
Sig2N
Sig3P
Sig3N
5d
Vcc
Thermistor
Thermistor
TEC+
TEC-
5b
5
5c

Fig.4

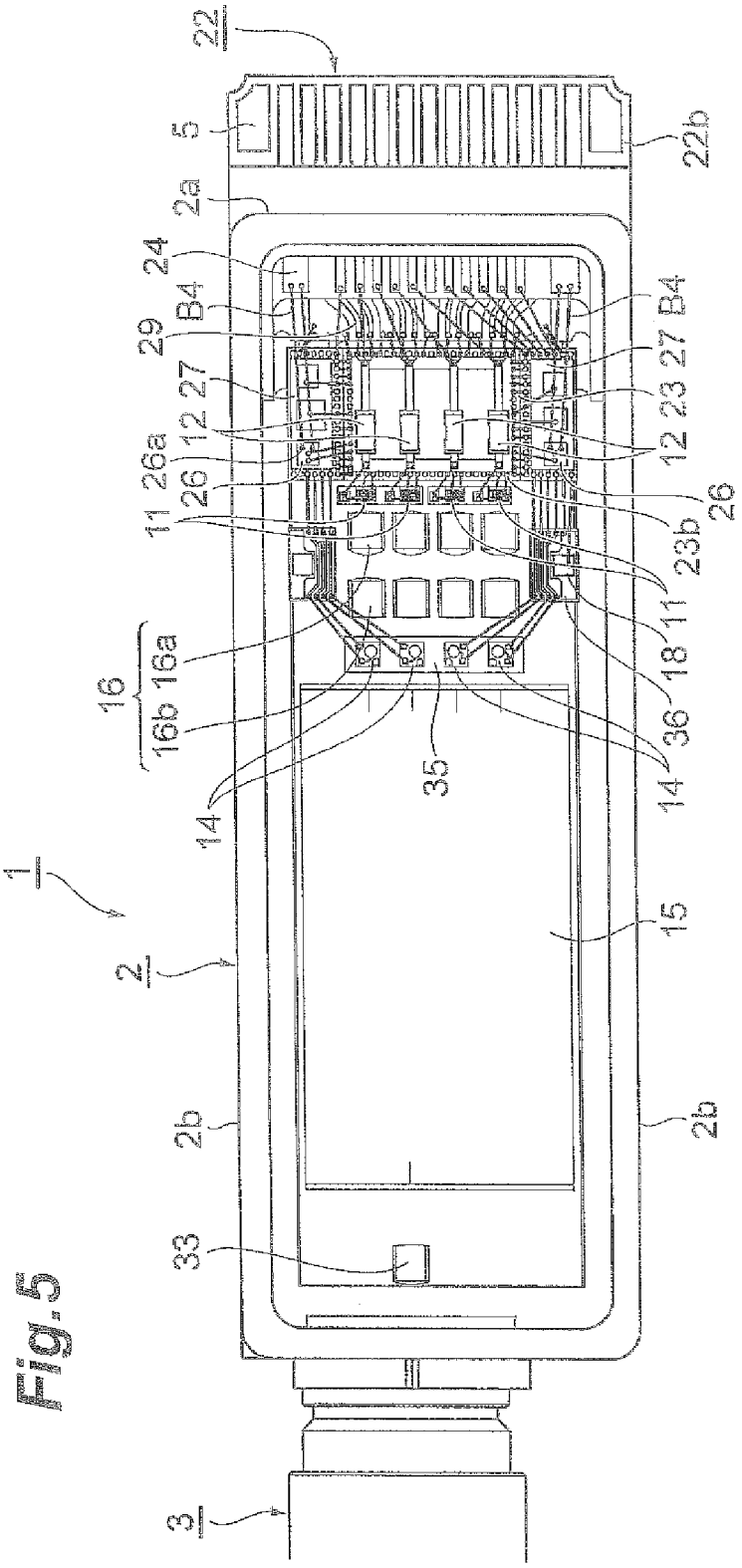
22
5
22b
2a
24
B4
29
27
12
26a
26
11
16
16a
16b
14
1
2
2b
33
3
35
15
36
18
23b
23
B4
27
12
26

Fig. 5

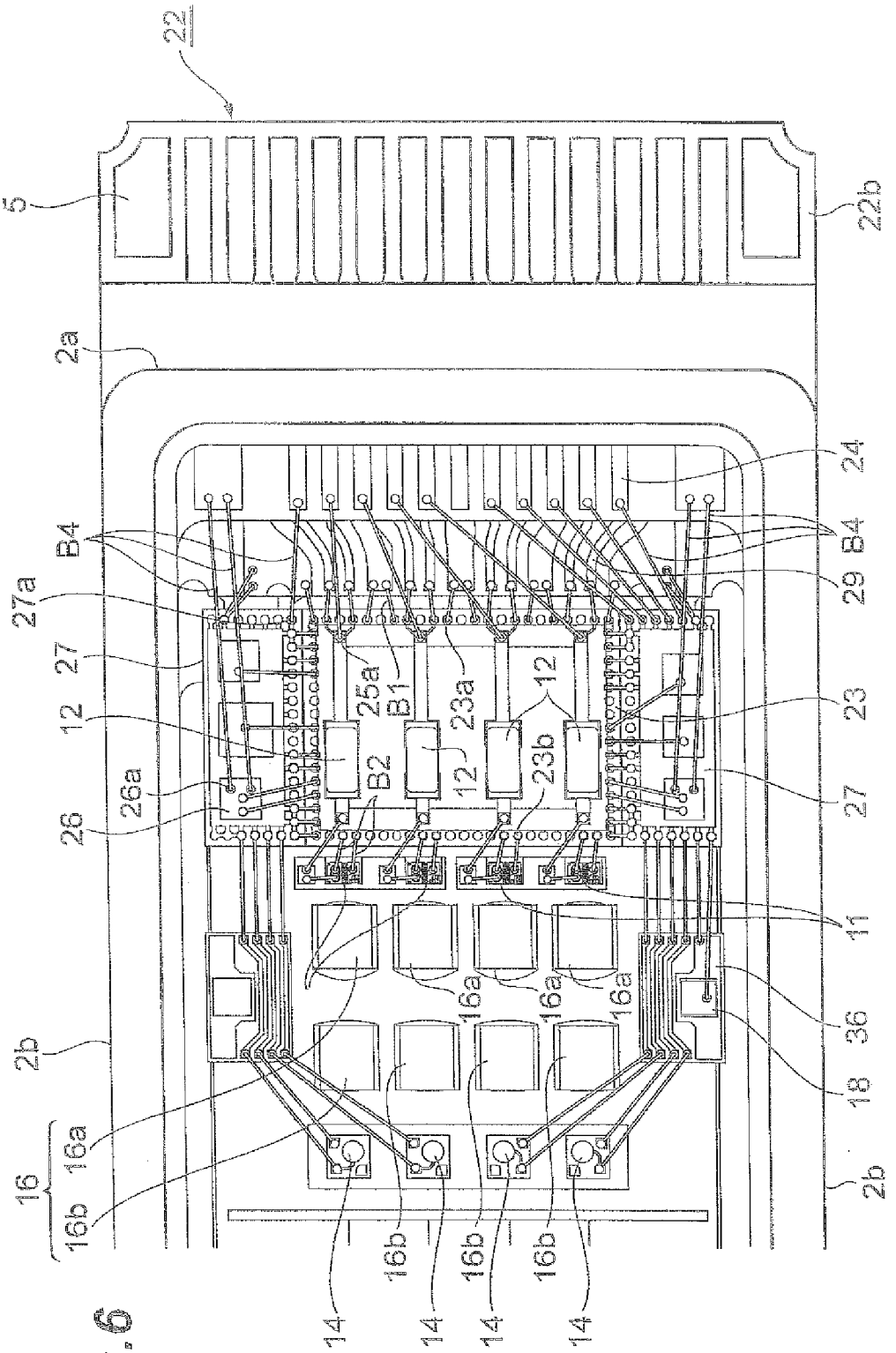
22
5
22b
2a
24
B4
B4
29
27a
27
25a
B1
23a
12
12
23
12
B2
12
23b
26a
26
27
11
16a
16a
16a
36
2b
18
16a
16
16b
2b
16b
16b
16b
14
14
14
14

Fig. 6

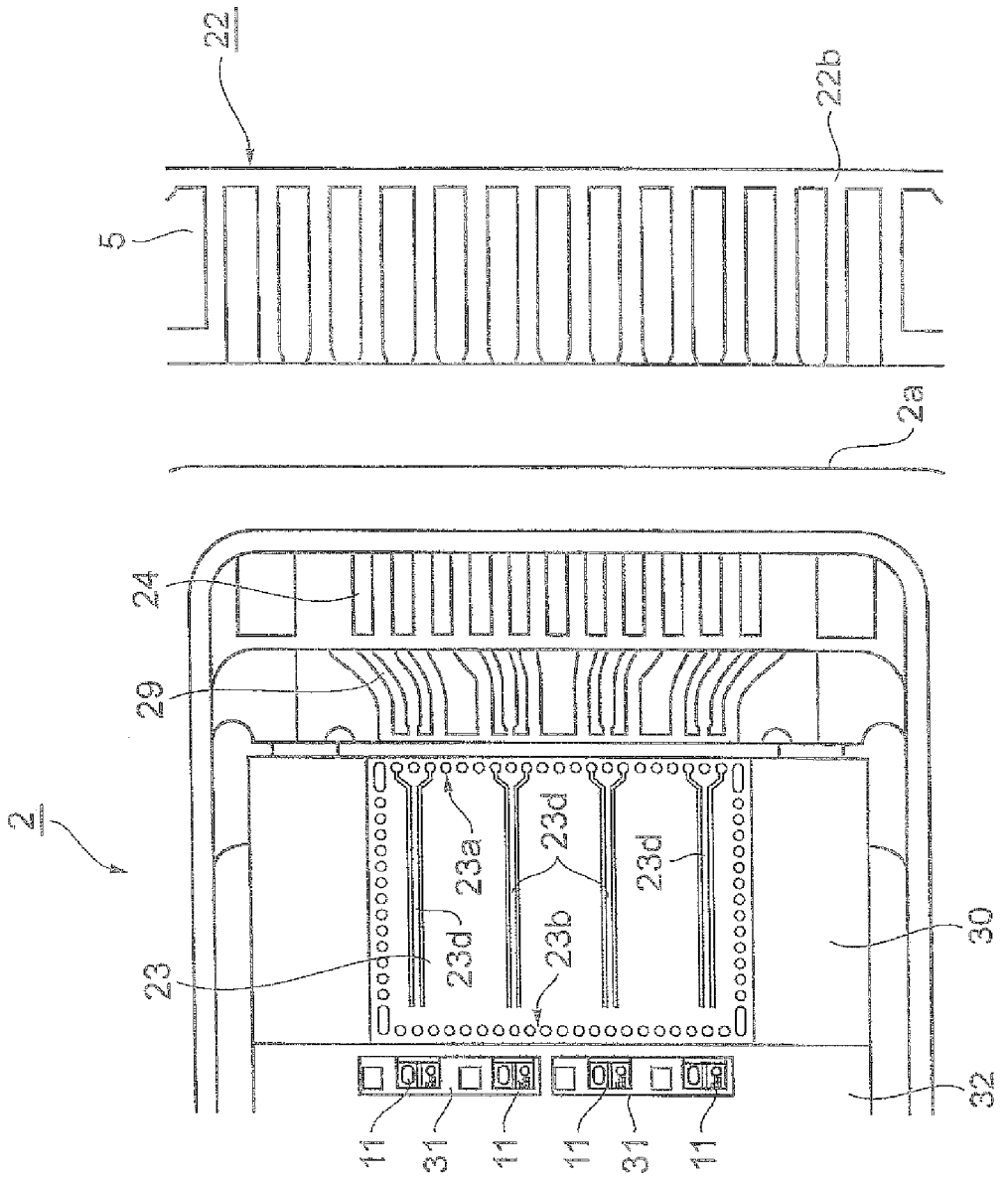

Fig. 7

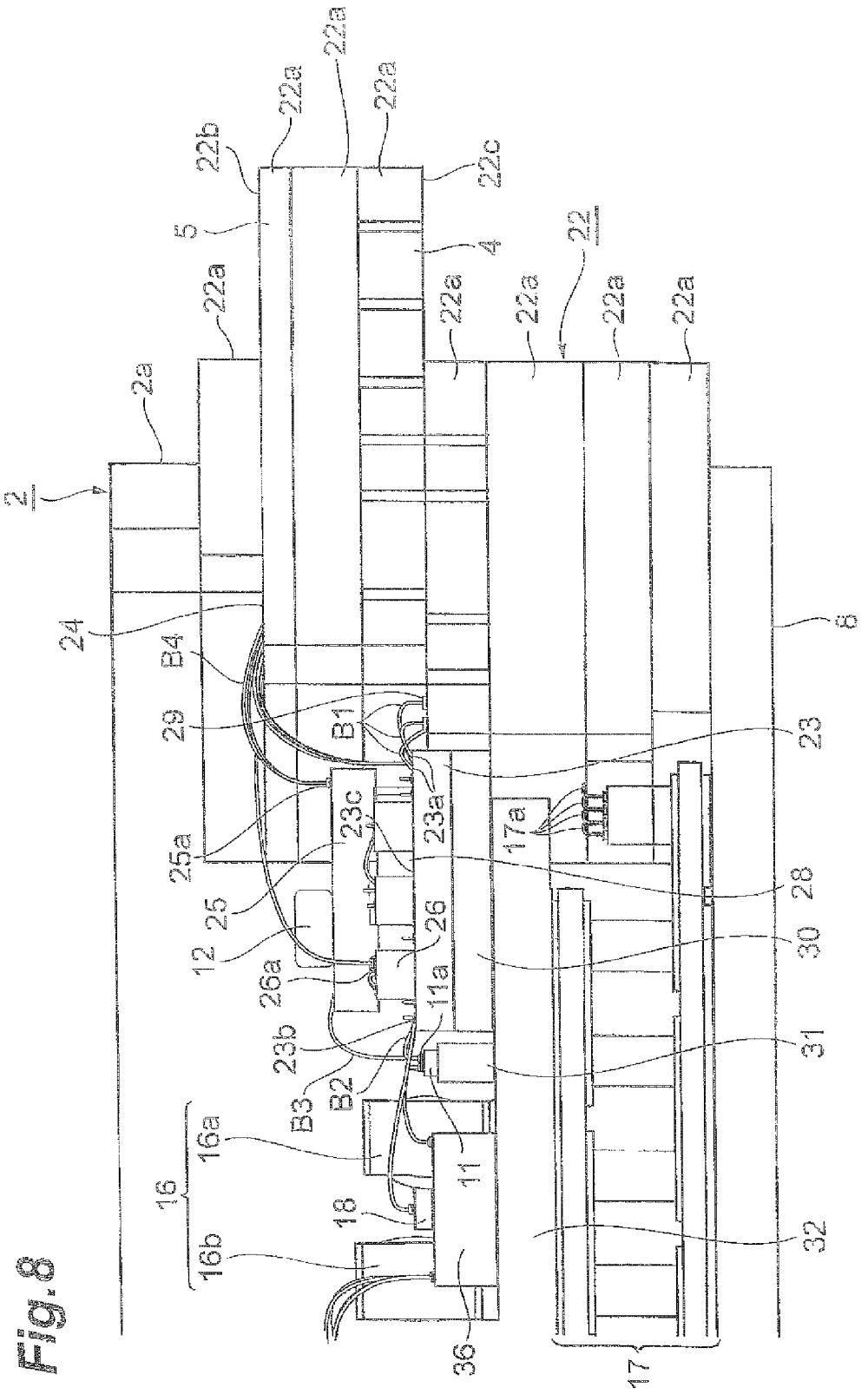
2
2a
22
22a
22b
22c
5
4
24
B4
29
B1
23
23a
23c
25a
25
12
26
26a
11a
23b
B3
B2
11
16
16a
16b
18
36
17
17a
28
30
31
32
8

Fig. 8

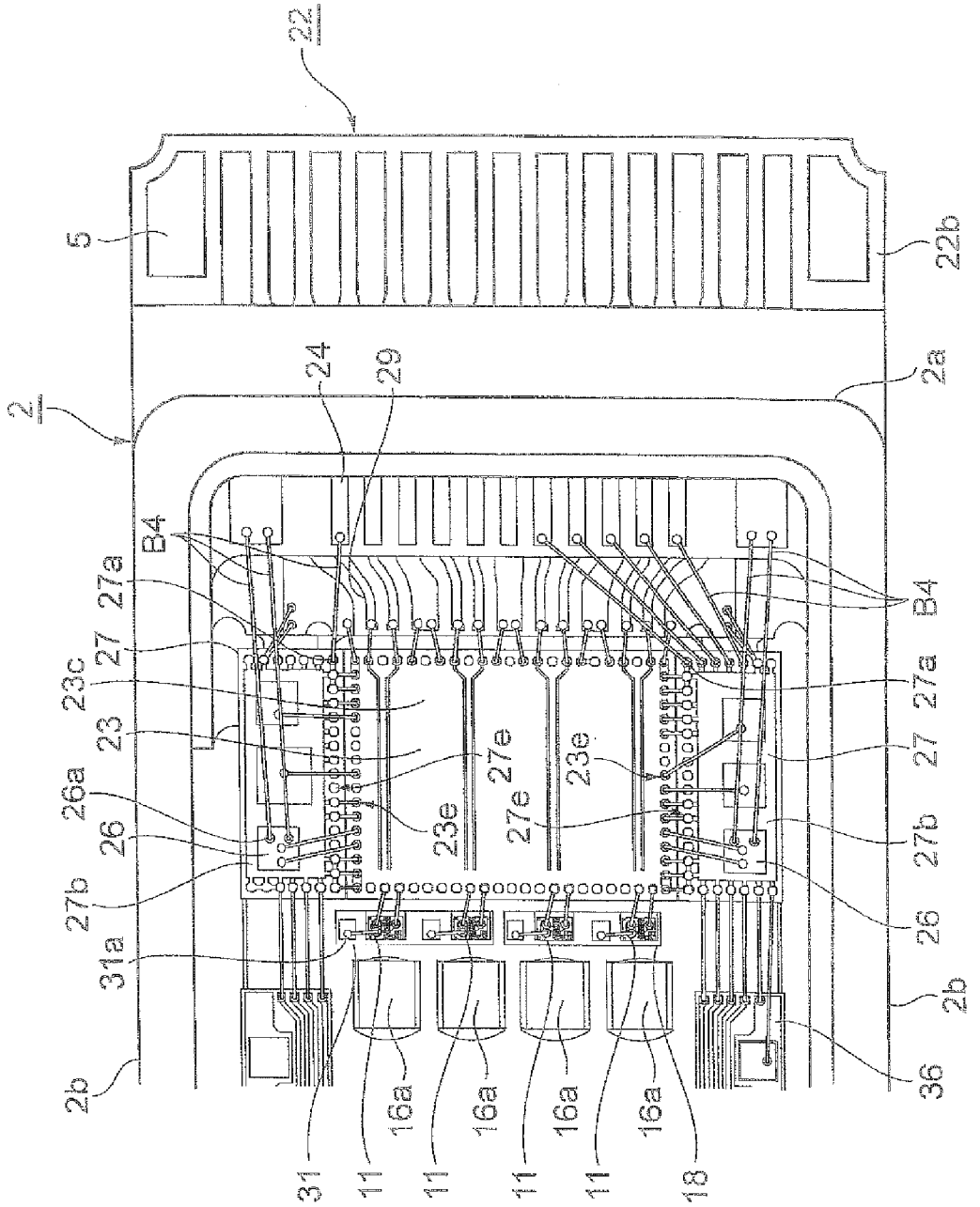
22
5
22b
2
2a
24
29
B4
27a
27
23c
23
26a
26
27b
31a
2b
31
11
16a
18
23e
27e
36

Fig. 9

Fig.10

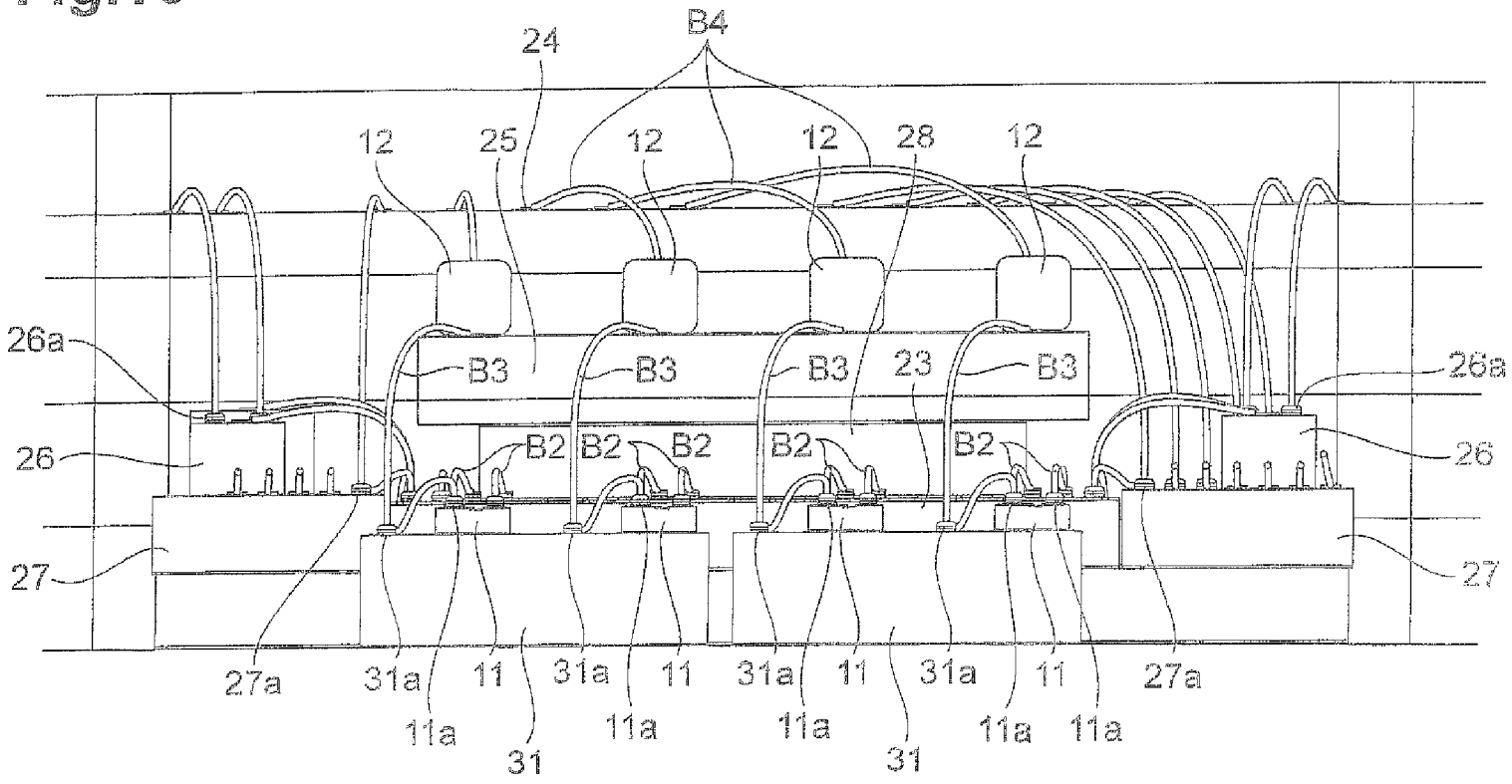
B4
24
12
25
12
12
28
12
26a
B3
B3
B3
23
B3
26a
26
B2
B2
B2
B2
B2
26
27
27
27a
31a
11
31a
11
31a
11
31a
11
27a
11a
31
11a
11a
31
11a
11a

Fig.11

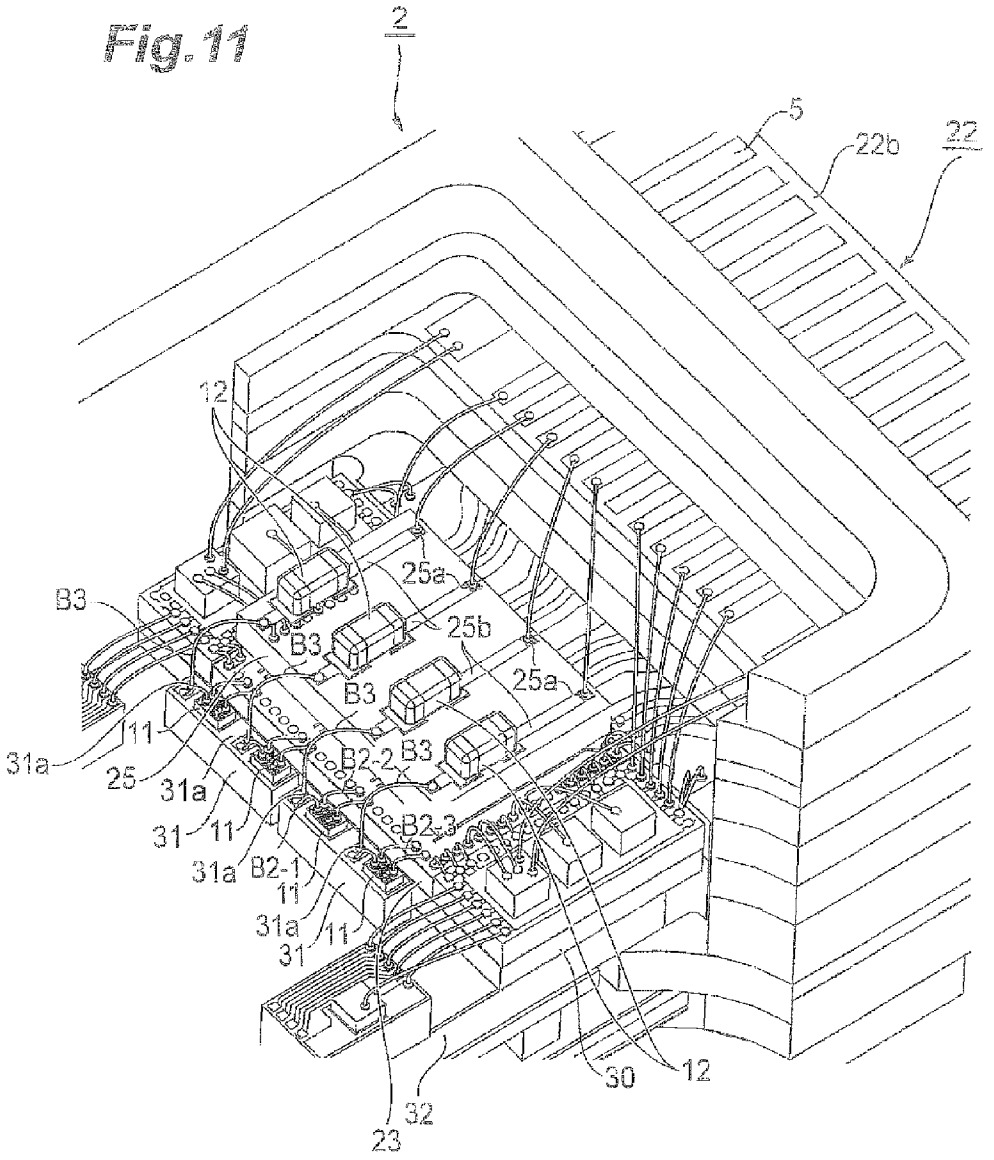
2
5
22b
22
12
25a
B3
25b
B3
B3
25a
11
31a
25
31a
B2-2
B3
31
11
B2-3
31a
B2-1
11
31a
11
31
30
12
32
23

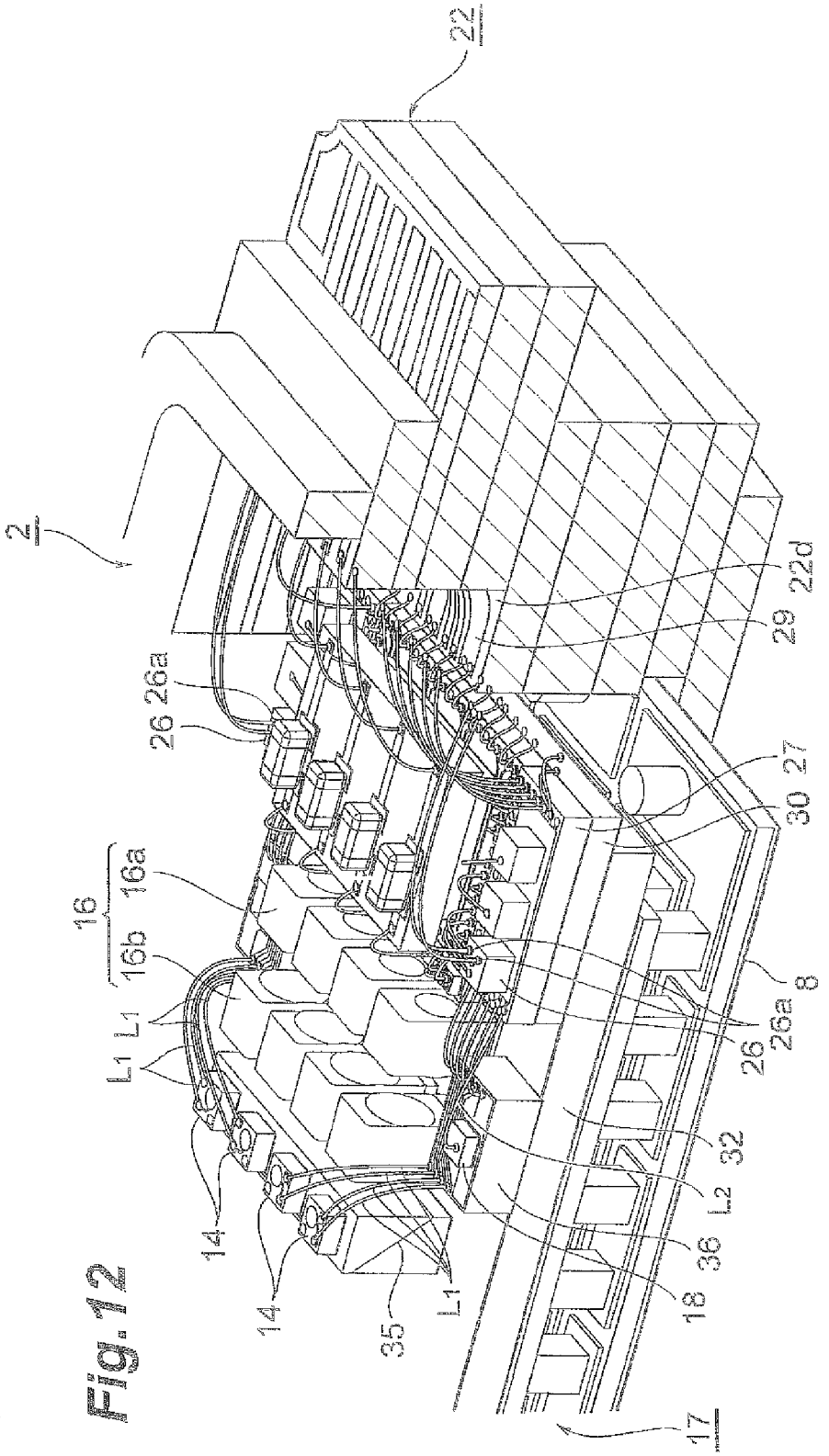
22
2
22d
29
26a
26
27
30
16
16a
16b
L1
L1
8
26a
26
32
L2
36
18
L1
14
14
35
17

Fig.12

Fig.13A

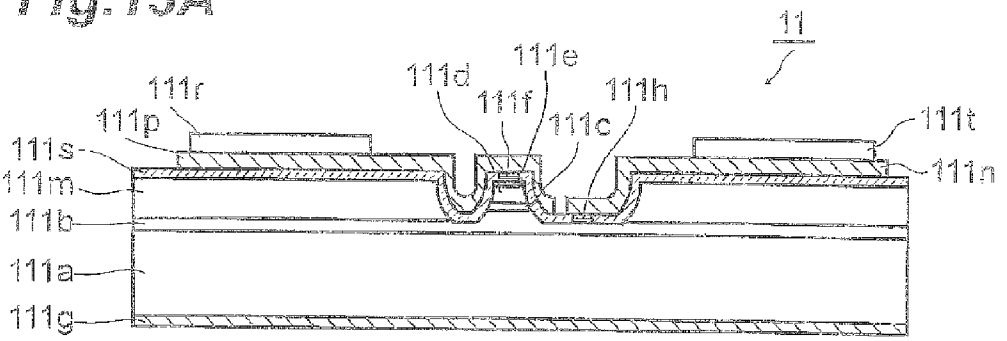

Fig.13B

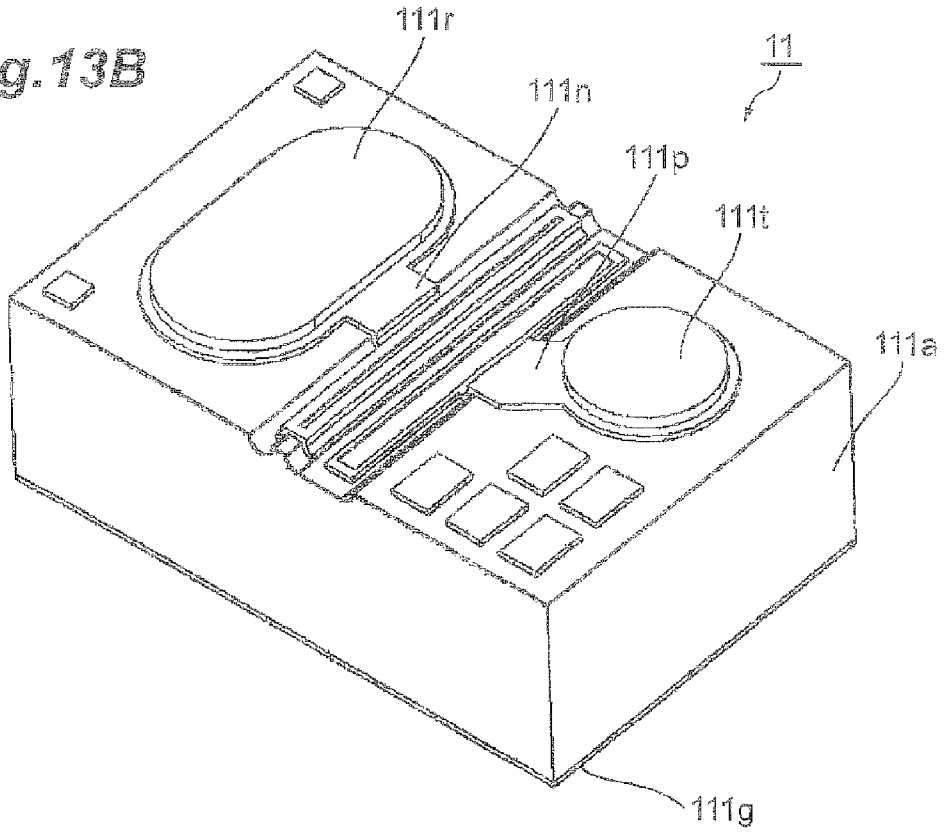

Fig.14

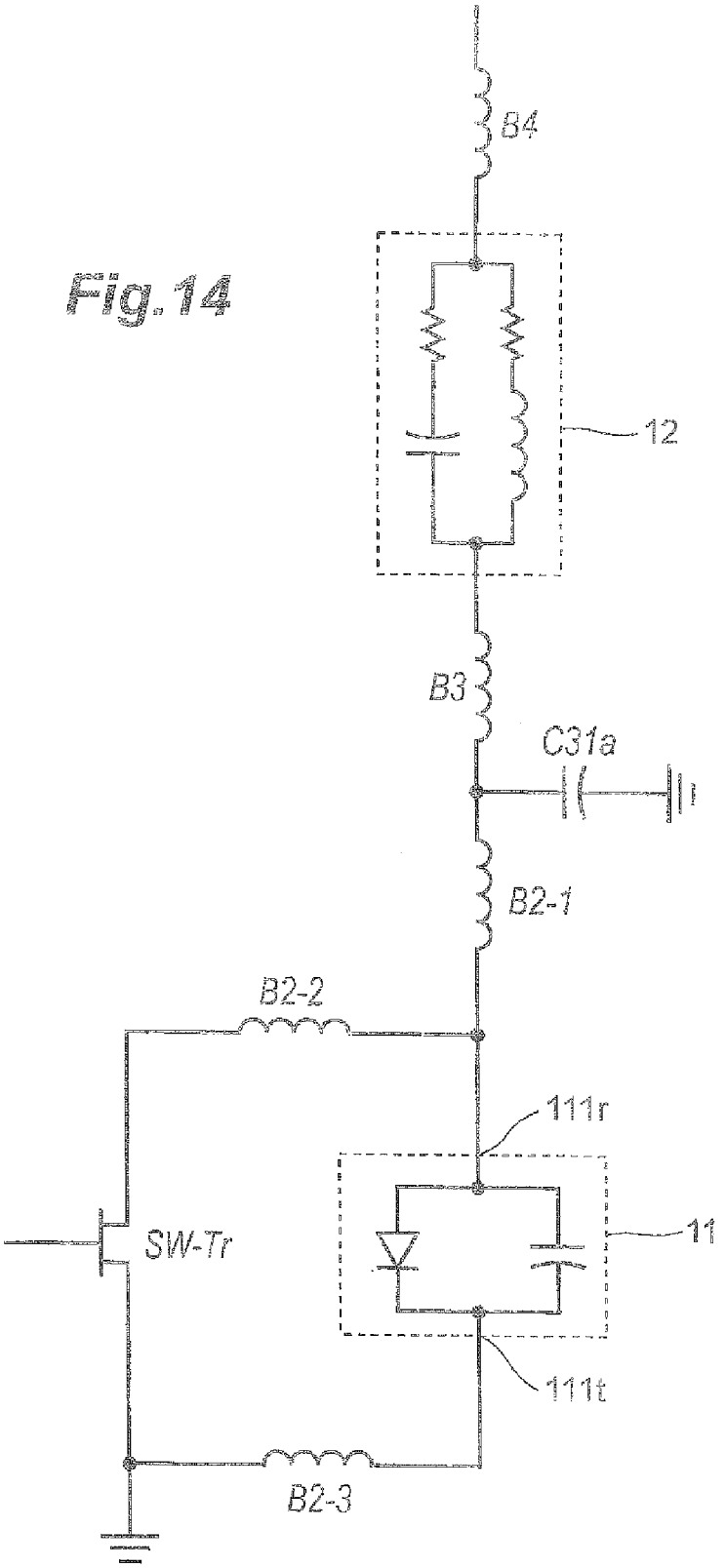

Fig.15A

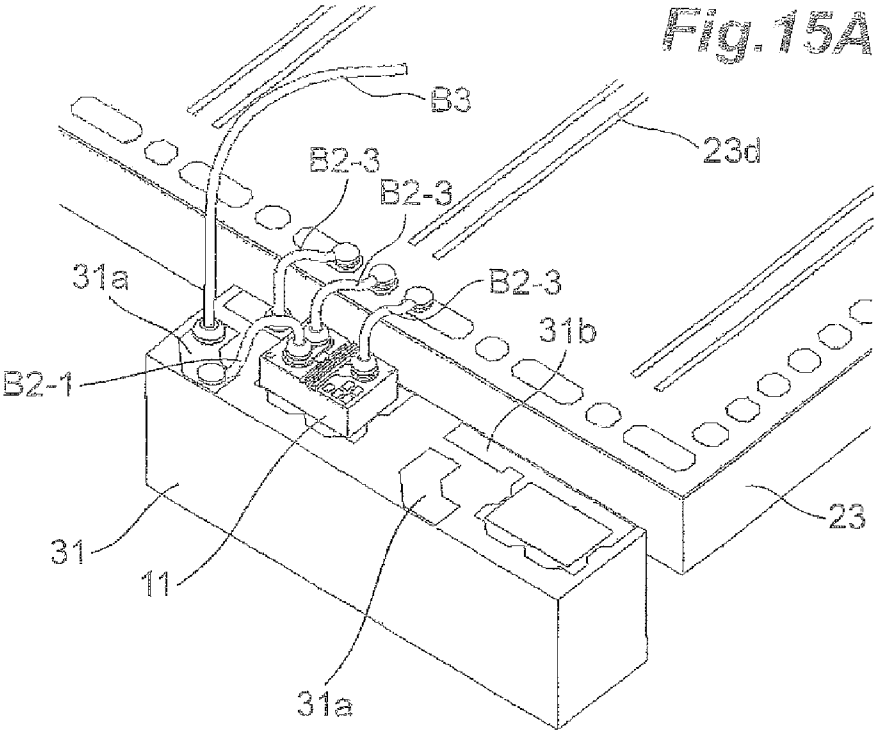

Fig.15B

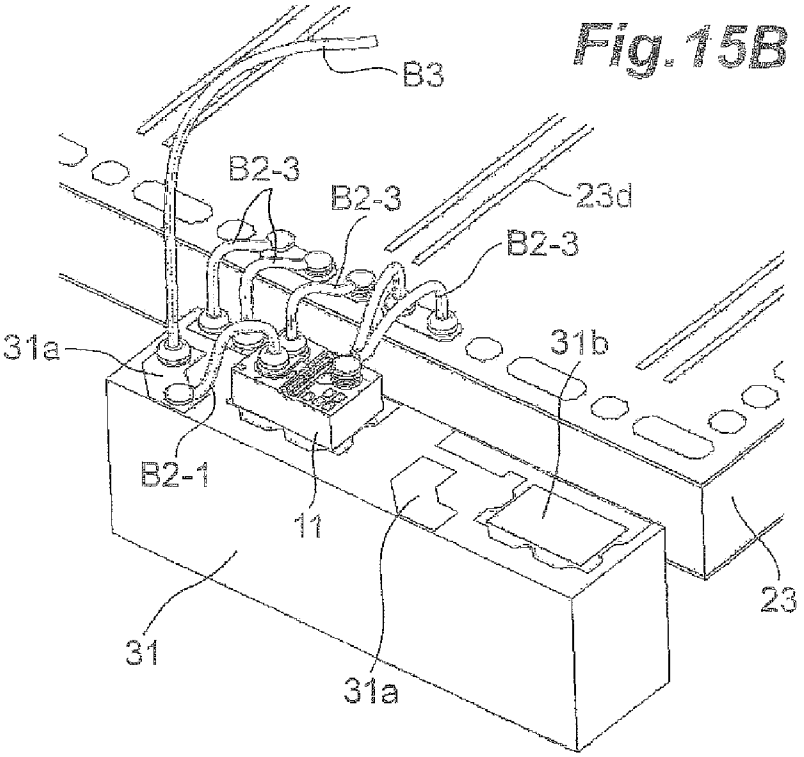

Fig.16

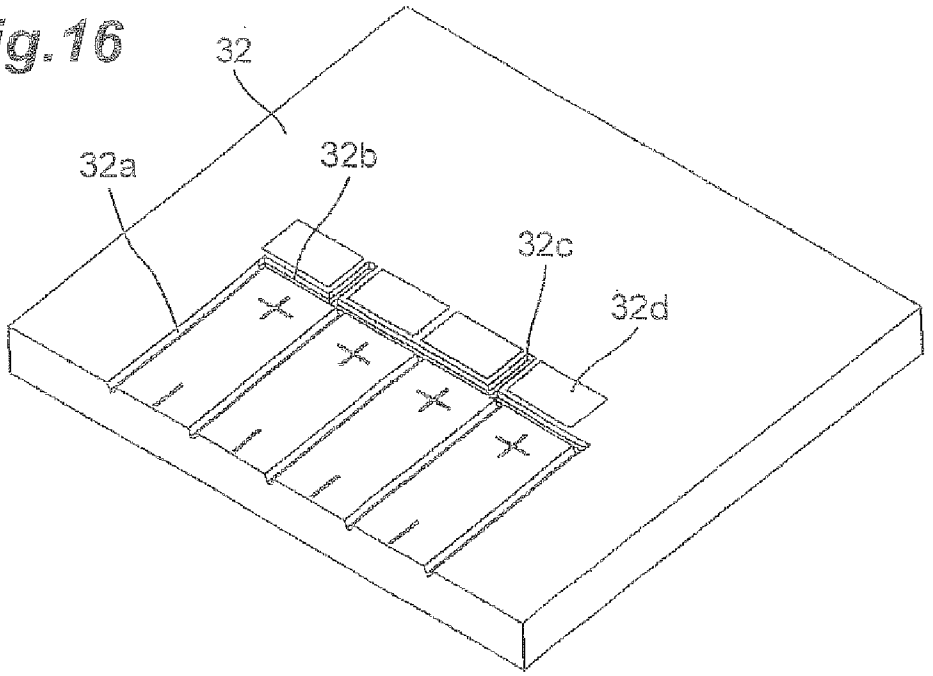

TRANSMITTER MODULE OUTPUTTING WAVELENGTH MULTIPLEXED LIGHT

BACKGROUND OF THE INVENTION

1. Field of the Invention

The present application relates to a transmitter optical module, in particular, a transmitter optical module having a plurality of optical signal sources.

2. Background Arts

An optical transmitter module that installs four laser diodes (herein after denoted as LDs) each emitting an optical beam with a specific wavelength different from others has been known in the field. In order to driver LDs installed within such a transmitter module, active devices, typically in integrated circuit (IC) implementing driver circuits to driver respective LDs, and passive devices of capacitors and inductors are inevitably installed within a housing of the transmitter module. In particular, when the operational speed of the LDs exceeds 10 Gbps, or reaches 25 Gbps, the assembly of such active and passive devices becomes a key factor for the transmitter module to show the designed performance. Moreover, recent trend for active optical components such an optical transceiver has continuously requested subjects inconsistent to each other, that is, the housing in the dimensions thereof is as small as possible, while, the performance or the operational speed thereof is as fast as possible.

In order to realize the operational speed exceeding 10 Gbps, the bonding wires connecting electrical components in the transmitter module should be short as possible. In other words, the electrical components are necessary to be positioned such that the bonding wires become shortest. A longer bonding wire causes an increase of the transmission impedance and degrades the high frequency performance of the transmitter module. The present application is to provide an arrangement of the components in the housing, by which the bonding wires effectively become shortest.

SUMMARY OF THE INVENTION

The present application relates to a transmitter module that includes a plurality of LDs, a driver, a top carrier, and a box-shaped housing. The LDs each emits an optical beam attributed to a specific wavelength different from others. The driver includes a plurality of driving circuits corresponding to respective LDs to driver the LDs. The top carrier mounts a plurality of inductors, where the bias currents are provided to the LDs through respective inductors. The box-shaped housing encloses the LDs, the driver, and the top carrier therein. A feature of the transmitter module is that the driver mounts the top carrier thereon.

In another aspect of the transmitter module of the present application, the transmitter module includes an LD, a driver, an LD sub-mount, and a housing. The LD includes a cathode electrode and an anode electrode, where both of the electrodes are exposed in a top surface of the LD. The driver has a signal pad and a ground pad. The LD sub-mount, which is made of electrically insulating material, has the relay pad and the die-pad. The relay pad relays the bias current to the LD, and the die-pad mounts the LD thereon. The housing encloses the LD, the driver, and the LD sub-mount therein; and provides the chassis ground. A feature of the transmitter module of the present application is that the anode electrode of the LD is wire-bonded to the signal pad of the driver through the relay pad on the LD sub-mount, and the cathode electrode of the LD is directly wire-bonded to the ground pad of the driver without being connected to the chassis ground of the housing.

BRIEF DESCRIPTION OF THE DRAWINGS

The foregoing and other purposes, aspects and advantages will be better understood from the following detailed description of a preferred embodiment of the invention with reference to the drawings, in which:

FIG. **1** shows an outer appearance of a transmitter module according to an embodiment of the present application, where the transmitter module is viewed from a rear top;

FIG. **2** shows an outer appearance of the transmitter module shown in FIG. **1**, where FIG. **2** views the transmitter module from the rear bottom;

FIG. **3**A is a plan view and FIG. **3**B is a side view of the transmitter module shown in FIGS. **1** and **2**;

FIG. **4** shows a functional block diagram of the transmitter module;

FIG. **5** shows an inside of the transmitter module;

FIG. **6** magnifies a portion where electronic components are installed;

FIG. **7** shows the portion where only the driver is installed;

FIG. **8** is a side cross section of the portion;

FIG. **9** shows the portion where the process to assembly the transmitter module forwards the step to install the electronic components beside the driver;

FIG. **10** shows the wirings of the bonding wires connecting the components in the housing;

FIG. **11** is a perspective view of the portion where the electronic components are installed and wire-bonded by respective bonding wires;

FIG. **12** is also a perspective view of the portion to shows the bonding wires;

FIG. **13**A shows a cross section of the LD implemented within the transmitter module, and FIG. **13**B shows an outer appearance of the LD;

FIG. **14** is a circuit diagram including parasitic components of the shunt-driving configuration;

FIGS. **15**A and **15**B perspective views of the arrangement around the LD according to the modified embodiments of the present application; and

FIG. **16** is a perspective view of the carrier mounting the LD sub-mount and the driver through the IC sub-mount.

DESCRIPTION OF EMBODIMENTS

Next, some embodiments of a transmitter module of the present application will be described as referring to drawings. In the description of the drawings, numerals or symbols same with or similar to each other will refer to the elements same with or similar to each other without duplicating explanations.

A transmitter module such as that shown in FIG. **1** is necessary to match characteristic impedance of the transmission lines to enhance and secure high frequency performance. Such a transmission line is known as a micro-strip line and/or a co-planar line whose width of the conductive line and thickness of a substrate on which the conductive line is formed are designed to set the characteristic impedance in 50Ω for the single line, or 100Ω for the differential arrangement.

However, the transmission lines prepared outside of the housing **2** of the transmitter module **1** are connected to the transmission lines in the housing **2** through electrical pads and bonding wires wire-bonded to the electrical pads; which forces hard to match the characteristic impedance of the transmission line in 50Ω because the bonding wires have inher-

ently show an inductive characteristic depending on a length and a diameter thereof. For instance, a gold (Au) wire with a diameter of 50 μm and a length of 1 mm inherently shows inductance of about 1 nH. Accordingly, the transmitter module **1** is necessary to be designed in an arrangement of electrical components such that the length of bonding wires becomes as short as possible not to cause impedance mismatching.

On the other hand, a transmitter module operable for the single optical signal generates an enough room in peripheries of the transmission lines even when the they are formed in a center of the module, which enhances the flexibility of the assembly or reduces the restriction in the arrangement of components. However, the transmitter module **1** like that of the present application, which is necessary to operate for a plural signals, needs to provide several transmission lines and several input/output terminals for electrical signals to be transmitted. The arrangement of the electrical and optical components are necessary so as to make the bonding wires shortest.

FIG. **1** shows an outer appearance of a transmitter module **1** of the present application, which is viewed from a rear top, while, FIG. **2** is viewed from the rear bottom. FIGS. **3**A and **3**B are a plan view and a side view of the transmitter module **1**, respectively. The present specification assumes that "rear" is a side where an electrical plug **22** is provided and "front" is a side opposite to the rear and provides a sleeve assembly **3**. The transmitter module **1** primarily comprises the box-shaped housing **2** and a cylindrical sleeve assembly **3** provided in the front wall **2***c* of the housing **2**. The housing **2** also provides the electrical terminal **22** in the rear wall **2***a*. The electrical terminal **22** includes RF terminals **4** for high frequency signals and DC terminals **5** for DC biases. The RF terminals **4** are collectively arranged in one side of the electrical terminal **22**, and the DC terminal **5** are also collectively arranged in another side of the electrical terminal **22**.

The present transmitter module **1** provides one electrical terminal only in the rear wall **2***a* of the housing **2** because, when the transmitter module **1** going to be installed within an optical transceiver type of, for instance, CFP2 and/or CFP4, no spaces or no rooms are left in respective sides **2***b* of the housing **2**. A receiver module and the transmitter module are arranged in side-by-side within the housing **2**.

The transmitter module **1** installs, as shown in FIGS. **4** and **5**, a plurality of laser diodes (LDs) **11**, a driver **23** to drive the LDs, some passive components such as inductors **12** and capacitors, a plurality of photodiodes (PDs) **14** whose number matches with the number of LDs **11**, a plurality of optical components such as an optical multiplexer **15** to multiplex beams each emitted from the LDs **11** and lenses **16**, a thermoelectric cooler (TEC) **17**, and a thermistor **18**.

The housing **2** is air-tightly or hermetically sealed by welding the ceiling **7** as substituting inner atmosphere, namely air, with dry nitrogen after those optical and electrical components are installed therein. The light multiplexed with respective optical beams output form LDs **11** optically couples with a coupling fiber secured in the sleeve assembly **3** passing through the optical components, specifically, lenses, an optical isolator, and a window provided in the front wall **2***c*.

The sleeve assembly **3** includes a cover **19** and a jointer **20**. The cover **19** covers a sleeve that receives a ferrule secured in an end of an external fiber. The sleeve and the jointer **20** are welded by the YAG laser to the housing **2** after aligning the multiplexed light with the sleeve, or exactly, the external fiber set within the sleeve. The housing **2** provides a bottom **8** made of material with good thermal conductivity, typically, copper tungsten (CuW), and a plurality of ceramic layers forming the electrical terminal **22**. The TEC **17** is directly mounted on the bottom **8**.

As shown in the figures, the electrical terminal **22** includes a plurality of ceramic layers **22***a* each having interconnections and via holes connecting interconnections in respective ceramic layers **22**. The transmission lines in the housing **2** are connected to the interconnections in the ceramic layers **22***a*, and the interconnections externally appears as the RF terminals **4** and the DC terminal **5**. Explaining further specifically, the ceramic layers **22***a* provides the DC terminal **5** on the topmost surface **22***b* thereof, but the RF terminals **4** on the bottommost surface **22***c*.

The bottom **8**, as described, is made of material with good thermal conductivity, typically CuW, to dissipate heat generated in the inside of the housing **2**. The bottom **8** in the outer surface thereof comes in contact with a chassis of the optical transceiver that installs the transmitter module **1** as interposing a flexible member such as thermal sheet to enhance the heat dissipation from the bottom **2** to the chassis.

FIG. **4** is a functional block diagram of the transmitter module **1**. The transmitter module **1** includes four (4) LDs **11**, where each emits an optical beam with a wavelength specific thereto and different from others, and the optical multiplexer **15** to multiplexes respective optical beams. The explanation below assumes the transmitter module **1** includes four LDs **11**, or is operable as an optical source with four signal channels; but the transmitter module **1** is not restricted to this arrangement, and the transmitter module **1** may install two or more LDs or channels.

The transmitter module **1** further installs a TEC **17** for mounting primary components of the transmitter module **1**. That is, the TEC **17** mounts a driver **23**, four LDs **11**, four monitor PDs **14**, the optical multiplexer **15**, and the thermistor **18** thereon. The LDs **11**, the inductors **12**, the monitor PDs **14** and the lenses **16** are disposed in respective rows of four elements along the lateral direction of the housing **2**. The thermistor **18** is disposed aside of the outer most lens **16**; but, the transmitter module **1** may arrange two thermistors in respective outer sides of the outer most lenses **16**.

The RF terminals **4** include four pairs of pads corresponding to respective LDs **11**, where each pair has the differential arrangement. The DC terminals **5** include four bias terminals **5***a* to provide bias currents to respective LDs **11**, two power supply terminals **5***b* for providing power to the TEC **17**, two signal terminals **5***c* for the thermistor **18**, one power terminal **5***d* for supplying the power to the driver **23**, two control terminals **5***e* for communicating with the driver **23**, and some ground terminals. Thus, the transmitter module **1** operable for a plurality of channels considerably increases the number of terminals, not only RF terminals **4** but DC terminals **5**. In the transmitter module **1** of the embodiment, the outputs of the monitor PDs **14** are converted into a digital form and output through the control terminals **5***e*. A conventional transmitter module with the multiple channel arrangement extracts monitor signals through respective independent terminals, which requires additional number of terminals. The present arrangement is unnecessary to prepare independent terminals to extract the monitor signals.

FIG. **5** shows an inside of the transmitter module **1**, FIG. **6** magnifies a portion where the driver **23** is installed, FIG. **7** shows the portion but members placed on the driver **23** is not installed, and FIG. **8** is a side cross section of the portion. The RF terminals **4**, as already described, is provided in the side **22***c* of the electrical terminal **22** opposite to the side **22***b* where the DC terminals **5** is provided. The ceramic layers **22***a* in a portion where the RF and DC terminal, **4** and **5**, are

provided protrudes from rest portions. The sides, **22***b* and **22***c*, are provided in this protruding portion.

The interconnections connected to the DC terminals **5** enter the inside of the housing **2** as extending on the top surface **22***b* of the ceramic layer **22***a* and become an inner DC terminals **24**. The DC terminals **24** are provided on the top of the seventh ceramic layer **22***a* counted from the bottom **8** of the housing **2**. The interconnection **17***a* for the TEC **17** is pulled down from the DC terminals **24** to the top of the second ceramic layer **22***a* also counted from the bottom **8** of the housing **2** through the via holes. Rest of the DC terminals **24** are connected to the pads **25***a* on the top carrier **25**, which will be described later, to the pads **26***a* of the capacitors **26**, and the pads **27***a* on the wiring substrate **27** mounting the capacitors **26**.

Referring to FIGS. **8** and **9**, the horizontal level of the top of seventh ceramic layer **22***a* on which the DC terminals **24** are formed is higher than the horizontal level of the pads **25***a* on the top carrier **25**, the pads **26***a* of the capacitors **26**, and the pads **27***a* on the wiring substrate **27**, which enables that the bonding wire B**4** extracted from the DC terminals **24** makes not only an acute angle with respect to the DC terminals **24** but also a substantial right angle against the pads, **25***a* to **27***a*.

The interconnections, which extend from the bottom surface **22***c* of the ceramic layer **22***a*, appear on the top surface the of the fourth ceramic layer **22***a* also counted from the bottom **8** of the housing **2** and connected to the inner RF terminals **29** without passing any via holes. These interconnections are for high frequency signals. Arrangements of these interconnections for high frequency signals, namely, extend in the same top surface, avoid the impedance mismatching. The inner RF terminals **29** are wire-bonded to the pads **23***a* provided on the top surface of the driver **23**.

The horizontal level of the inner RF terminals **29** is substantially same with or slightly lower than the horizontal level of the pads **23***a* on the top of the driver **23** to enable the ball-bonding to the pads **23***a*. Specifically, the bonding wire B**1** is first ball-bonded to the pads **23***a* of the driver **23**, then moving the bonding head above the inner RF terminals **29** as extending the bonding wire B**1**, then ball-bonded to the inner RF terminals **29**. When the horizontal level of the second bonding position is slightly lower than the horizontal level of the first bonding position, the movement from the first position to the second position as extending the bonding wire becomes facilitated.

The bonding wire B**1** bonded to the pads **23***a*, the first bonding positions, makes an angle slightly smaller than a right angle against the pads **23***a*, and another angle slightly greater than the former angle but smaller than a right angle against the inner RF terminals **29**, the second bonding position. This shape of the bonding wire B**1**, which may be realized by setting the horizontal level of the second bonding position, namely, the inner RF terminals **29**, slightly lower than the first bonding position, namely, the pads **23***a* on the driver **23**, not only makes the process simple but enhances the reliability of the ball-bonding process.

The other pads **23***b* on the driver **23**, which are provided in a side opposite to the side where the former pads **23***a* are formed, are wire-bonded to the pads **11***a* of respective LDs **11**. Also, the horizontal level of the pads **11***a* is slightly lower than the level of the other pads **23***b*. Accordingly, this arrangement of two pads, **23***b* and **11***a*, makes the bonding wire B**2** connecting the former pads **23***b* to the latter pads **11***a* short as securing the wire-pulling strength.

As shown in FIGS. **6** to **8**, the TEC **17** mounts the carrier **32** thereon, and the carrier **32** mounts the IC sub-mount **30**, the LD sub-mount **31** and the thermistor sub-mount **36**. The IC sub-mount **30** mounts the driver **23** and the wiring substrate **27**. The LD sub-mount **31** mounts the LDs **11** thereon. The driver **23** mounts the top carrier **25** by interposing a spacer **28**. The top carrier **25** mounts the inductors **12** thereon. That is, five layers of the carrier **32**, the IC sub-mount **30**, the driver **23**, the spacer **28** and the top carrier **25**, exist under the inductors **12** to the top of the TEC **17**.

Referring to FIG. **7**, the LD sub-mount **31**, exactly two LD sub-mounts **31** are arranged on the carrier **32** in side-by-side along the lateral direction of the housing **2**. Each of the LD sub-mounts **31** mounts two LDs **11** also arranged in side-by-side. Referring to FIG. **6**, the wiring substrate **27**, exactly, two wiring substrates **27** are disposed on the IC sub-mount **30** in respective outer side of the driver **23**. The thermistor-substrate **36**, exactly, two thermistor substrates **36** are arranged on the carrier **32** in the front of respective wiring substrates **27** as putting the LDs **11** and lenses **16***a* therebetween. In the present transmitter module **1**, only one of the thermistor sub-mounts **36** provides the thermistor **18** thereon.

In an example, the spacer **28** is made of aluminum nitride (AlN) with a thickness of 350 μm, the top carrier **25** is made of silica (SiO_2) with a thickness of 350 μm, the IC sub-mount **30** is also made of AlN with a thickness of 300 μm, the LD sub-mount **31** is made of AlN with a thickness of 400 μm, and the carrier **32** is made of AlN with a thickness of 300 μm. The spacer **28**, which is mounted on the driver **23**, preferably has a thermal expansion co-efficient substantially same with that of a primary material of the driver **23** so as not to degrade performance of the driver **23**. The top carrier **25** is preferably made of material having relatively smaller dielectric constant because the pads and/or the interconnections formed thereon cause parasitic capacitors. Such capacitors with substantial capacitance degrade the high frequency performance of the transmitter module **1**. Accordingly, the top carrier **25** is preferably made of material having smaller dielectric constant, typically silicon die-oxide (SiO_2). On the other hand, the IC sub-mount **30** and the LD sub-mount **31** are preferably made of material having good thermal conductivity to dissipate heat generated by the LDs **11** and the driver **23** effectively. The carrier **32** is also preferably made of material having good thermal conductivity to dissipate heat generated by the driver **23** and the LDs **11**, and to make the temperature distribution on the TEC **17** uniform.

The optical beams each emitted from the LDs **11** enter the optical multiplexer **15** as passing through respective lenses **16**. The PDs **14** are put in the upstream of the multiplexer **15** to monitor the magnitude of respective optical beams output from the LDs **11**. The multiplexer **15** multiplexes the optical beams to output the multiplexed light. The multiplexed light is concentrated on the coupling fiber secured in the sleeve assembly **3** as passing through one or more lenses **33** also provided in the sleeve assembly **3**. Mating an external optical connector with the sleeve assembly **3**, the transmitter module **1** may optically couple with the external fiber. The transmitter module **1** may also install an optical isolator on optical paths in the housing **2** or the sleeve assembly **3**.

The transmitter module **1** receives the RF signals for respective LDs as the differential configuration. Accordingly, the RF terminals **29** within the housing **2** have a grouped arrangement of G/Sig+/Sig−/G, where G, Sig+, and Sig− mean the ground, the signal with a positive phase, and the signal with a negative phase. On the other hand, the pads **23***a* on the driver **23** have an additional ground pad between pads for the positive and negative signals, Sig+ and Sig−, respectively. The additional ground pad is not wire-bonded to anywhere but connected to the inner ground of the driver **23**. The RF terminals **29** may have an additional ground terminal

between two terminals for the positive and negative signals. In such an arrangement, the additional ground terminal may be wire-bonded to the additional ground pad on the driver **23**.

The pads for the positive and negative phase signals, Sig+ and Sig, respectively, are extended by the interconnections **23***d* toward the side where the pads **23***b* for the LDs **11** are formed, and connected to respective driving circuits integrated within the driver **23** to practically drive the LDs **11**. The driver **23** may have other circuits to control the transmitter module **1** beneath the interconnections **23***d*. The driving circuits are formed only in the side facing the LDs **11** where the pads **23***b* are formed. The RF signals amplified by the driving circuits are provided from the pads **23***b* through the bonding wires B**2**.

The LDs **11** have the type of, what is called as the edge emitting type each having an n-type substrate and some epitaxial layers grown on the n-type substrate. An LD with the n-type substrate is often assembled as the epitaxial layer is downward and the substrate is upward, which forms the epitaxial layer becomes the cathode while the substrate is the anode. The LDs **11** of the present embodiment, however, have the arrangement where both the anode and the cathode are extracted from the top surface, namely, the side of the epitaxial layers, by pulling up the electrode in the substrate to the top surface by the via hole. This is because the LDs **11** of the present embodiment are driven by, what is called, the shunt-driving mode. In the shunt-driving mode, the anode, namely, the epitaxial layer for the n-type substrate, receives the driving signal; while, the cathode, namely, the n-type substrate, is grounded. As shown in FIGS. **6** and **8**, the bonding wires B**2** extracted from the pads of the driver **23***b* are both bonded to the pads **11***a* formed on the top surface of the LDs **11**.

Also, as shown in FIGS. **10** and **11**, the relay pads **31***a* provided in one side of the LD sub-mount **31** are connected to the inductors **12** mounted on the top carrier **25**. Specifically, the top carrier **25** provides four interconnections **25***b* corresponding to respective LDs **11**, where the interconnections **25***b* are cut by respective inductors **12**. The bias currents are provided to respective LDs **11** through the inductors **12** and the relay pads **31***a* on the LD sub-mount **31**.

The shunt-driving circuits, which practically drive the LDs **11** and integrated in the driver **23**, each includes a switching transistor to shunt the bias current provided through the inductor **12**. When the switching transistor turns on, almost whole bias current passing through the inductor **12** flows in the switching transistor. On the other hand, when the switching transistor turns off, the whole bias current flows in the LD. Thus, the LD is modulated. The inductors **12** mounted on the top carrier **25** are inductors to electrically isolate the parallel circuit of the switching transistor and the LD from the external power supply. The inductance of the inductors **12** is preferably large enough to stably isolate the parallel circuits from the external power supply, which inevitably increases the outer dimensions of the inductors **12**. The transmitter module **1** of the present embodiment installs the inductors **12** with relatively larger outer dimensions in a space above the driver **23** as interposing the spacer **28**.

The shunt-driving circuit has a feature to inherently generate less heat compared with other type of the driving circuit. Accordingly, it is unnecessary or less important to consider the heat dissipation of the driver **23** toward the above space thereof. Moreover, the present transmitter module **1** installs the TEC **17** with the carrier **32** that mounts the driver **23** through the IC sub-mount **30**. Accordingly, the driver **23** is set under a suitable temperature condition.

The inductors **12** on the top carrier **25**, as shown in FIG. **11**, are connected to the relay pads **31***a* on the LD sub-mount **31** with relatively longer bonding wires B**3**. However, these bonding-wires B**3** do not cause the degradation of the high frequency performance of the transmitter module **1** because the bonding wires B**3** are to connect the inductors **12** to the LDs **11**. That is, the bonding wires B**3** are provided in places where substantial inductance is requested. Accordingly, the bonding wires B**3** preferably have a smaller diameter so as not to increases parasitic resistance.

Passive components such as capacitors **26** for bypassing the power supply are disposed around the driver **23**. Referring to FIG. **12**, the interconnections L**1** for the monitor PDs **14**, those L**2** for the thermistor **18**, and/or those for controlling the driver **23** are electrically connected to the DC terminals **24** as extending through the thermistor sub-mount **36** and the wiring substrate **27** placed in respective sides of the lenses **16**, the LDs **11**, and the driver **23**. The wiring substrate **27** also mounts the bypassing capacitors **26**; accordingly, the interconnections for the monitor PDs **14** and the thermistor **18** extend inner layers of the wiring substrates **27**.

As shown in FIG. **12**, the top surface **22***d* of one of the ceramic layers **22***a* where the inner RF terminals **29** are provided is different from, or exactly, faces the bottom surface **22***c* of another of the ceramic layers **22***a* where the outer RF terminals **4** are provided. The inner RF terminals **29** and the interconnections extending therefrom preferably have the transmission impedance of, for instance, 50Ω for the mono-phase line or 100Ω for the differential phase line by the arrangement of the micro-strip line and/or the co-planar line. However, a via-hole sometimes degrades the transmission impedance. The arrangement described above is unnecessary to connect two RF terminals through via-holes; accordingly, the transmission impedance may be secured.

Referring to FIG. **9**, the driver **23** of the embodiment provides the pads **23***e* for DC signals in respective sides facing the side walls **2***b* of the housing **2**, and the longitudinal sides of the driver **23** only provide the pads, **23***a* and **23***b*, for the RF signals. Direct wiring of the DC pads **23***e* of the driver **23** with the DC terminals **24** in the rear wall may cause unintentional contact of bonding-wires. Accordingly, the embodiment provides the wiring substrates **27** between the sides of the driver **23** and the side walls **2***b*. The wiring substrates **27** provides the pads **27***c* facing the pads **23***e* on the driver **23**. That is, the pads **23***e* on the driver **23** are drawn to the DC terminals **24** in the rear wall through the pads **27***c* on the wiring substrate **27**, the interconnections within the wiring substrate **27**, and the pads **27***a* on the wiring substrate **27**. Bonding wires connect the pads **23***e* to the pads **27***c*, and the pad **27***a* to the DC terminals **24**.

As shown in FIG. **9**, the wiring substrate **27** provides the pads, **27***a* and **27***c*, along the edges facing the DC terminals **24** and the pads **23***e* on the driver **23**, respectively. Provided in an area surrounded by the pads, **27***a* and **27***c*, on the top surface of the wiring substrate **27** is a ground pad **27***b* on which bypassing capacitors **26** are mounted. The interconnections between the pads, **27***c* and **27***a*, are provided underneath the ground pad **27***b*. Because the wiring for the DC terminals **24** is bypassed through the wiring substrate **27**, the space above the driver **23** is unnecessary to extend bonding wires, which enables that the top carrier **25** mounts the inductors **12** thereon.

Also, the transmitter module **1** of the embodiment, as shown in FIG. **5**, provides beam splitters (BSs) **35** in the downstream of the second lenses **16***b*, namely, the collimating lenses. The BSs **35** mounts respective PDs **14** thereon. That is, the PDs **14** may detect respective portions of the optical beams each emitted from the LDs **11** and generate monitoring signals. The monitoring signals are provided to the driver **23**

through the thermistor sub-mounts **36** disposed in respective sides of the lenses, **16***a* and **16***b*. The driver **23** integrates with auto-power control circuits (APCs) for respective LDs **11** independently to maintain the output power of the LDs in constant based on thus provided respective monitoring signals from the PDs **14**.

The present transmitter module **1** provides two lenses in respective downstream of the LDs **11**. The first lenses **16***a* and the second lenses **16***b* may be optional. When the optical multiplexer **15** is a type of the arrayed waveguide (AWG), the second lenses **16***b* may be concentrating lenses to concentrate respective optical beams onto the waveguides of the AWG. In such a case, two-lens system of the first lens **16***a* and the second lens **16***b* may be the collimated beam system when the first lens is a type of the collimating lens, or the focused beam system when the first lens is a type of the concentrating lens. On the other hand, when the multiplexer **15** is a type of the wavelength Division Multiplexing (WDM) filter, the second lenses **16***b* may be collimating lenses to enhance the optical coupling efficiency for the lens **33** provided in front of the output port of the housing **2** with respect to the coupling fiber secured in the sleeve assembly **3**.

Next, the assembly around the LDs **11** will be further specifically described as referring to FIGS. **13** to **16**, where FIG. **13**A schematically shows a cross section of the LD **11** implemented within the transmitter module **1**, FIG. **13**B shows an outer appearance of the LD **11**. The LD **11** of the present application is specifically designed for the shunt-driving configuration.

Referring to FIG. **13**A, the LID **11** has the type of the buried hetero-structure (BH) including, on a semiconductor substrate **111***a*, a lower cladding layer **111***b*, an active layer **111***c*, an upper cladding layer **111***d*, and a contact layer **111***e*. These layers, **111***b* to **111***e*, are epitaxially grown on the semiconductor substrate **111***a*, and form a mesa structure. Accordingly, the active layer **111***c* has a limited width. Both sides of the mesa structure are buried by the embedding layer **111***m*, This structure effectively confines the light generated in the active layer **111***c* by injecting the bias current therein. The embedding layer **111***m* has two grooves in respective sides of the mesa structure. Whole of the top surface of the LD **11** is covered by an insulating film **111***s*, which is often called as the passivation layer and typically made of silicon nitride (SiN). The insulating film **111***s* in the top of the mesa and the bottom of one of the grooves are removed to form openings, and respective ohmic metals, **111***f* and **111***h*, are filled within the opening so as to be in contact with the layers, **111***e* and **111***b*, underneath respective openings.

The ohmic metal **111***f* on the top of the mesa structure is extracted by the interconnection **111***p*, while, the ohmic metal **111***h* in the bottom of the groove is extracted by the interconnection **111***n*. The interconnections, **111***p* and **111***n*, each runs onto the insulating film **111***s* and come in contact with respective pads, **111***r* and **111***t*. The LD **11** also provides the back metal **111***g* in the back surface of the substrate **111***a*. Because the lower cladding layer **111***b* and the substrate **111***a* are highly doped which means that the back metal **111***g* and one of the ohmic metal **111***h* are under substantially same potential. This structure of the LD **11** shown in FIG. **13**A makes it possible to extract the cathode not only from the back metal **111***g* of the substrate **111***a* but the top surface of the LD **11**. As shown in FIG. **13**B, the LD **11** of the embodiment provides two pads, **111***r* and **111***t*, in the top surface thereof, where one of the pads **111***r* is connected to the top electrode **111***f* of the mesa as the anode electrode, while, the other pad **111***t* is connected to the electrode **111***h* in the bottom of the groove as the cathode electrode. In addition, the former pad **111***r* has an extended circular shape to facilitate the wire-bonding of two wires, one is from the bias supply and the other comes from the driver **23**.

FIG. **14** schematically illustrates the shut-driving circuit, where some parasitic components are explicitly included in the circuit diagram. The shunt-driving circuit has a feature that the current switching element, namely, a transistor SW-TR, and the LD **11** are connected in parallel with respect to the bias current source connected to the inductor **12**. When the transistor turns on by the driving signal, the current coming from the bias current source substantially flows in the switching transistor, which means that almost no current flows in the LID **11**. On the other hand, when the transistor turns off, a substantial component of the bias current flows in the LD **11**. Thus, the LD **11** is modulated by the driving signal.

Parasitic inductors attributed to the bonding wires, B**2-1** to B**4**, and capacitors C**31***a* due to the relay pad **31***a* on the LD sub-mound **31** are necessary to be taken into account when the LD **11** is driven by the RF signal whose frequency reaches and sometimes exceeds 10 Gbps. The bias current coming from the current source first flows in the bonding wire B**4** connecting the DC terminals **24** to the pads **25***a* on the top carrier **25**, then, flowing in the inductors **12** mounted on the top carrier **25**. Although the pads **25***a* and the interconnections **25***b* on the top carrier **25** inherently show parasitic capacitance with respect to the chassis ground, many components such as the TEC **17**, the carrier **32**, the IC sub-mount **30**, the driver **23**, the spacer **28**, and the top carrier **25**, are stacked between the top surface of the top carrier **25** and the chassis. In addition, the bias current is inherently DC signal. Accordingly, the parasitic capacitance for the elements on the top carrier **25** may be substantially ignorable.

Passing through the inductor **12**, the current flows in the bonding wire B**3** connecting the interconnections **25***b* on the top carrier **25** with the relay pads **31***a* on the LD sub-mount **31**, where the relay pads **31***a* inherently has capacitance C**31***a* against the chassis ground. The LD sub-mount **31** is mounted on the carrier **32**, and the carrier **32** is mounted on the TEC **17**. Accordingly, an arrangement similar to that for the inductor **12** on the top carrier **25** is realized for the relay pads **31***a*. However, because the driving signal passes the relay pads **31***a*, even a faint parasitic capacitance affects the high frequency performance of the LD **11**. As shown in FIG. **11**, the relay pads **31***a* on the LD sub-mount **31** are wire-bonded to the anode electrode **111***r* of the LDs **11** with the bonding wire B**2-1**. As shown in FIG. **13**B, The electrode **111***r* has the extended circular shape. The bonding wire B**2-1** is bonded in a half portion of the electrode **111***r*, while, the rest portion thereof is also bonded with the bonding wire B**2-2** connecting the electrode **111***r* of the LD **11** with the pad **23***b* on the driver **23**. Moreover, the other electrode **11** it also provided on the top of the LD **11** is wire-bonded to the pad **23***b* of the driver **23**. The electrode **111***t* corresponds to the cathode electrode of the LD **11**, and the cathode is grounded through the bonding wire B**2-2** as shown in FIG. **14**, but the ground is taken within the driver **23** not around the LD **11**.

It is conventionally a common sense or an invariably law that the ground interconnection is thick and short as possible. The present arrangement around the LD **11** that the cathode ground of the LD **11** is connected to the driver **23** with a slim bonding wire not connected around the LD **11**. This is because of the configuration that the transmitter module **1** of the present embodiment installs a plurality of LDs **11**, where a channel cross-talk between LDs **11** becomes sensitive. When the cathode grounds for respective LDs **11** are common, the cross-talk through the common ground becomes fatal reason to degrade the performance of the transmitter

module **1**. Accordingly, in the present embodiment of the transmitter module **1**, the cathode grounds of respective LDs **11** are independently drawn within the driver **23**. As shown in FIG. **11**, the embodiment installs only two LD sub-mounts **31**, that is, two LDs **11** are commonly mounted on the single LD sub-mount **31**, which may cause a crosstalk between two LDs **11**. However, the pads **31***b* for the LDs **11** on the LD sub-mount **31** are fully isolated and the LD sub-mount **31** itself is made of aluminum nitride (AlN). Accordingly, the crosstalk between two LDs **11** becomes substantially ignorable.

Moreover, as shown in FIG. **16**, the carrier **32** that mounts the LD sub-mount **31** provides four pads **32***d* for the LD sub-mount **31**, where two pads **32***d* in the left side are commonly provided for one LD sub-mount **31** and rest two pads **32***d* in the right side are commonly provided for the other LD sub-mount **31**. One feature of the carrier **32** of the present embodiment is that the carrier **32** provides a groove **32***c* between two pads **32***d* in the right side and another groove **32***c* between two pads **32***d* in the left side. The pads **32***d* putting respective grooves **32***c* are for a portion mounting one of the LDs **11** and a portion mounting another one of the LDs **11**. Even when the excessive conductive adhesive to mount the LD sub-mount **31** on the pad **32***d* oozed out from the pads **32***d* and the pads provided in the back surface of the LD sub-mount **31**, the grooves **32***c* may receive the oozed adhesive. Accordingly, the isolation between pads in the back surface of the LD sub-mount **31** and the pads **32***d* on the carrier **32** for the LD sub-mount **31**. The carrier **32** may provide another grooves, **32***a* and **32***b*, where they have an object same with above to absorb oozed adhesive.

FIGS. **15**A and **15**B show other arrangements around the LD sub-mount **31**. As described, in the present transmitter module **1**, the cathode ground of the LDs **11** are drawn within the driver **23** not grounded around the LDs **11**. The arrangement shown in FIG. **11** provides only one bonding wire B**2**-**3** connecting the cathode pad lilt with the ground pad of the driver **23**. The LD **11**, as shown in FIGS. **13**A and **13**B, provides the back metal **111***g* connected to the cathode pad **111***t* on the top surface thereof. The modified arrangements shown in FIGS. **15**A and **15**B utilize the back metal **111***g*. That is, the arrangement shown in FIG. **15**A wire-bonds the die-pad **31***b*, which is provided on the top of the LD sub-mount **31** and connected to the back metal **111***g* of the LD **11**, to the ground pads **23***b* of the driver **23**. In this arrangement, the bonding wire B**2**-**2** which carries the modulating signal is put between two ground wires B**2**-**3**, which equivalently emulates the coplanar line and secures the transmission characteristics of the RF signal propagating on the bonding wire B**2**-**2**. The arrangement shown in FIG. **15**B further strengthens the ground performance. That is, the die-pad **31***b* on the LD sub-mount **31** is bonded to the pads **23***b* on the driver **23** with two bounding wires B**2**-**3**, and the cathode electrode lilt on the top of the LD **11** is also wire-bonded to the pads **23***b* with two bonding wires B**2**-**3**. The pad **111***t* is bonded in duplicate.

While particular embodiments of the present embodiment have been described herein for purposes of illustration, many modifications and changes will become apparent to those skilled in the art. Accordingly, the appended claims are intended to encompass all such modifications and changes as falling within the true spirit and scope of this invention.

What is claimed is:

1. A transmitter module, comprising:

a plurality of laser diodes (LDs) each emitting an optical beam attributed to a wavelength specific thereto and different from others;

a driver that includes a plurality of driving circuits corresponding to respective LDs, the driving circuits driving the respective LDs, the driver having RF pads and DC pads;

a top carrier that mounts a plurality of inductors each providing bias currents to respective LDs, the top carrier being mounted on the driver as interposing a spacer therebetween; and

a box-shaped housing for enclosing the LDs, the driver, and the top carrier therein,

wherein the box-shaped housing provides RF terminals and DC terminals commonly in a side wall of the box-shaped housing, and

wherein the driver has a square plane shape with four edges, one of the four edges facing the side wall and another one of the four edges extending in parallel to the one of the four edges providing only the RF pads, two of the four edges intersecting the one of the four edges and the another one of the four edges providing only the DC pads.

2. The transmitter module of claim **1**,

wherein the bias currents are provided from the DC terminals in the side wall through bonding wires connecting the DC terminals and interconnections formed on the top carrier, the respective inductors provided on the top carrier breaking the interconnections into respective two portions, and another bonding wires connecting respective one of the broken interconnections with the respective LDs.

3. The transmitter module of claim **1**,

wherein the driver includes interconnections connecting the RF pads formed along the one of the four edges facing the side wall to the respective driving circuits formed close to the another one of the four edges of the driver,

wherein the RF terminals in the side wall provide respective RF signals to the driving circuits through bonding wires connecting the RF terminals to the RF pads and the interconnections, and the driving circuits provide the RF signals through the RF pads formed along the another one of the four edges to the directly respective LDs.

4. The transmitter module of claim **1**,

further comprising a wiring substrate disposed in a side facing the edge intersecting the one of the four edges and the another one of the four edges of the driver,

wherein the wiring substrate is electrically connected to the DC terminals provided in the side wall with bonding wires not intersecting a space above the driver.

5. The transmitter module of claim **1**,

further comprising two wiring substrates each disposed in respective sides facing the edges intersecting the one of the four edges and the another one of the four edges of the driver, the wiring substrates arranging the driver therebetween,

wherein the wiring substrates are electrically connected to the DC terminals provided in the side wall with bonding wires not intersecting a space above the driver.

6. The transmitter module of claim **1**,

wherein the side wall includes a plurality of ceramics layers, one of ceramic layers providing the RF terminals in a top surface thereof in the box-shaped housing and another one of ceramic layers stacked on the one of ceramic layers providing the RF terminals in a bottom surface thereof outside of the box-shaped housing, the RF terminals in the box-shaped housing being connected with the RF terminals outside of the box-shaped housing without passing any via-holes.

7. The transmitter module of claim **6**,

wherein the RF terminals in the box-shaped housing collectively have a horizontal level slightly lower than a horizontal level of a top surface of the driver, and the horizontal level of the top surface of the driver is substantially equal to or slightly higher than a horizontal level of a top surface of the LDs.

8. A transmitter module, comprising:

a plurality of laser diodes (LDs) each emitting an optical beam attributed to a wavelength specific thereto and different from others;

a driver that includes a plurality of driving circuits corresponding to respective LDs, the driving circuits driving the respective LDs;

a top carrier that mounts a plurality of inductors each providing bias currents to respective LDs, the top carrier being mounted on the driver as interposing a spacer therebetween; and

a box-shaped housing for enclosing the LDs, the driver, and the top carrier therein, the box-shaped housing enclosing an IC sub-mount that mounts the driver thereon, a carrier that mounts the IC sub-mount thereon, and a thermoelectric cooler (TEC) that mounts the carrier thereon,

wherein the top carrier is disposed on a stack formed by the carrier, the IC sub-mount, the driver, and the spacer.

9. The transmitter module of claim **8**,

wherein the spacer has thermal expansion co-efficient substantially same with thermal expansion co-efficient of the driver.

10. The transmitter module of claim **9**,

wherein the top carrier is made of silicon oxide (SiO_2), the spacer is made of one of silicon (Si) and aluminum nitride (AlN), and the IC sub-mount is made of aluminum nitride (AlN).

11. A transmitter module, comprising:

a laser diode (LD) including a cathode electrode and an anode electrode, the cathode electrode being exposed in a top surface of the LD;

a driver having a signal pad and at least two ground pads;

a LD sub-mount made of electrically insulating material, the LD sub-mount having a relay pad for relaying a bias current to the LD and a die pad for die-bonding the LD thereon; and

a housing for enclosing the LD, the driver, and the LD sub-mount therein, the housing providing a chassis ground,

wherein the anode electrode of the LD is wire-bonded to the signal pad of the driver through the relay pad on the LD sub-mount, and the cathode electrode of the LD is directly wire-bonded to the one of the ground pads of the driver without being connected to the chassis ground of the housing.

12. The transmitter module of claim **11**,

wherein the LD has a back electrode substantially short-circuited to the cathode electrode within the LD, the back electrode being directly in contact with the die pad on the LD sub-mount, and

wherein the die pad on the LD sub-mount is wire-bonded to another of the ground pads of the driver.

13. The transmitter module of claim **11**,

wherein the die pad on the LD sub-mount and the cathode electrode of the LD are doubly wire-bonded to the respective ground pads of the driver.

14. The transmitter module of claim **11**,

further comprising another LD driven independently of the LD,

wherein the LD sub-mount commonly mounts the LD and the another LD thereon as maintaining electrical isolation between the LD and the another LD.

15. The transmitter module of claim **14**,

further comprising a carrier,

wherein the LD sub-mount includes a first portion for mounting the LD thereon and a second portion for mounting the another LD thereon, and

wherein the carrier has a first pad for bonding the first portion of the LD sub-mount thereto, a second pad for bonding the second portion of the LD sub-mount thereto, and a groove for dividing the first pad from the second pad.

* * * * *