UNITED STATES PATENT AND TRADEMARK OFFICE

BEFORE THE PATENT TRIAL AND APPEAL BOARD

EOPTOLINK TECHNOLOGY USA, INC.,

Petitioner,

v.

APPLIED OPTOELECTRONICS, INC.,

Patent Owner.

Case IPR2026-00123

Patent No. 11,177,887

DECLARATION OF DR. ALAN E. WILLNER, PH.D.
IN SUPPORT OF PATENT OWNER'S PRELIMINARY RESPONSE

TABLE OF CONTENTS

I. Introduction 3
II. Qualifications and Publications 4
III. Materials Considered 9
IV. Legal Principles 10
V. Level of Ordinary Skill in the Art 15
VI. Summary of Opinions Formed 16
VII. Technology Background 17
VIII. The ’887 Patent 19
A. Overview of the ’887 Patent 19
B. Prosecution History of the ’887 Patent 22
IX. GROUND 1 23
A. Overview of Kuhara (Exhibit 1004) 23
B. Opinions Regarding Ground 1 25
1. Petitioner and Dr. Lebby fail to show Kuhara discloses “wherein the second mounting region at the optical coupling end of the substrate is configured to edge mount to the at least one TOSA module” as required by Claim 1 of the ’887 Patent 25
X. GROUND 2 27
XI. GROUND 3 28

I, Alan E. Willner, declare the following:

I. INTRODUCTION

1. I have been retained by Applied Optoelectronics, Inc. ("AOI" or "Patent Owner"), as an independent expert to provide my expert opinions regarding the validity of various claims of U.S. Patent No. 11,177,887 (the "'887 patent"). I understand that Eoptolink Technology USA, Inc. ("Eoptolink" or "Petitioner") has filed a petition ("the Petition") requesting that the Patent Trial and Appeal Board ("PTAB") institute an *inter partes* review ("IPR") proceeding for the '887 patent.

2. I am being compensated for my work in this matter at my usual consulting rate of $475 per hour for the time I spend on this matter. Neither my engagement nor my compensation depends on the substance of my opinions or the outcome of the IPR proceeding or any other proceeding. I understand that the owner of the '887 patent is AOI, and the Petitioner is Eoptolink. To the best of my knowledge, I have no financial interest in the Patent Owner or Petitioner.

3. I understand that this proceeding involves Claims 1-3 and 8-12 (the "Challenged Claims") of the '887 Patent. I further understand that Petitioner raises three grounds in the Petition. I understand that the grounds raised by Petitioner are as follows:

- Ground 1: Claims 1-3 are anticipated by Kuhara (U.S. Patent No. 7,366,367, Ex. 1004);

- Ground 2: Claims 8, 10, and 12 are obvious over Kuhara; and
- Ground 3: Claims 8-12 are obvious over U.S. Patent No. 10,509,184 to Ho (Ex. 1005) in view of Kuhara.

4. I have been asked to provide my independent opinions in response to each of Petitioner's grounds asserted for invalidity.

II. QUALIFICATIONS AND PUBLICATIONS

5. My qualifications as set forth in this declaration are summarized in the following paragraphs and explained in more detail in my curriculum vitae, which is attached as Exhibit A to this report.

6. I am a Distinguished Professor of Electrical and Computer Engineering at the University of Southern California (USC). For more than 35 years, I have been involved in several areas of optical communication technologies, including devices, subsystems, systems, and networks.

7. I received both my M.S. and Ph.D. degrees in Electrical Engineering from Columbia University in 1984 and 1988, respectively. There, I received the Edwin Howard Armstrong Foundation Memorial Award for being the highest-ranked Electrical Engineering Master's student. Additionally, I earned a B.A. in Physics (1982) and an Honorary Doctorate of Humane Letters (*Honoris Causa*, 2012) from Yeshiva University.

8. From 1988 to 1990, I worked at AT&T Bell Laboratories as a Postdoctoral Member of the Technical Staff. From 1990 to 1992, I worked as a Member of the Technical Staff in the Photonics Research Department of Bell Communications Research. My work at both companies focused on optical communication systems.

9. Since 1992, I have been assistant, then associate, and full Professor of Electrical Engineering at the University of Southern California (USC). I have been the Director of the Optical Communications Laboratory at the University of Southern California since 1992. I am currently the Andrew & Erna Viterbi Professorial Chair and a Distinguished Professor in the Ming Hsieh Dept. of Electrical and Computer Engineering at USC. In my position at USC, I also advise students on their doctoral thesis work.

10. From 1999 to 2002, I co-founded and served as CTO of Phaethon Communications, a company whose technology was acquired by Teraxion and that created the ClearSpectrum® chromatic dispersion compensator product line. ClearSpectrum® was marketed to equipment manufacturers and has been deployed in many commercial systems worldwide.

11. I have received various awards and honors. For example, I received the National Science Foundation Presidential Faculty Fellows Award from the White House, one of 30 recipients in 1994 in all areas of science and engineering. I am also

a Member of the U.S. National Academy of Engineering, an International Fellow of the U.K. Royal Academy of Engineering, and a Fellow of the National Academy of Inventors. Moreover, I was the recipient of a Fulbright Foundation Senior Scholars Award, Guggenheim Foundation Fellowship, Packard Foundation Fellowship, and U.S. Dept. of Defense Vannevar Bush Faculty Fellowship (formerly the Defense Security Science and Engineering Faculty Fellowship).

12. Additional awards and honors that I have received include the following: Institute of Electronic and Electrical Engineers (IEEE) Eric Sumner Technical Field Award for achievement in communications technology; IEEE Photonics Society Engineering Achievement Award; Optica (formerly Optical Society of America, OSA) Paul Forman Engineering Excellence Award; SPIE President's Award; IEEE Photonics Society Distinguished Traveling Lecturer Award; Optica Hopkins Leadership Award; Egleston Medal for Distinguished Engineering Achievement from the Columbia University Engineering Alumni Association; Institution of Engineering & Technology (IET) J.J. Thomson Medal for Electronics; Ellis Island Medal of Honor; Civilian Service Commendation Medal from the U.S. Dept. of the Army; IEEE Photonics Society Distinguished Service Award; Eddy Award for Best Technical Paper from Pennwell Publications; and IEEE Globecom Best Paper Award. I also received the USC Associates Award for University-Wide Creativity in Research (highest university research award) and the

USC Associates Award for University-Wide Excellence in Teaching (highest university teaching award). I am also a Fellow of the American Association for the Advancement of Science (AAAS), American Physical Society, IEEE, IET, Optica, and SPIE.

13. I have served in various professional activities, including: Co-Chair of the U.S. National Academies' Study on "Optics and Photonics: Essential Technologies for Our Nation"; President of the IEEE Photonics Society (~6,000 members); President of Optica (~20,000 members); Co-Chair of the Science and Engineering Counsel of Optica; Chair of the IEEE Technical Activities Board Ethics and Member Conduct Committee; General & Program Co-Chair of the Conference on Lasers and Electro-Optics (CLEO); Chair of the National Photonics Initiative; Program Chair of Telecommunications Engineering at SPIE's Photonics West; General Co-Chair of the IEEE Photonics Society Topical Meeting on Broadband Networks; and Chair of the Unclassified Technical Program for the IEEE MILCOM Conference.

14. My editorial positions have included the following: Editor-in-Chief of the *IEEE/OSA Journal of Lightwave Technology* (JLT); Editor-in-Chief of *OSA Optics Letters*; Editor-in-Chief of the *IEEE Journal of Selected Topics in Quantum Electronics*; Associate Editor of the *IEEE Journal of Selected Areas in Communications (JSAC) Series on Optical Networks*; and Guest Co-Editor of the

JLT and IEEE JSAC Joint Special Issue on *Multiple-Wavelength Technologies & Networks*.

15. I have been a Member of the U.S. Army Science Board and a Member of the Defense Sciences Research Council (a 16-member body that provided reports to DARPA Director & Office Directors). I have also served on many technical advisory boards, especially for small companies.

16. I have over 1800 publications, including 1 book, ~10 edited books, ~56 keynotes/plenaries, ~26 book chapters, over 470 refereed journal papers, and over 375 invited papers/presentations. I am a named inventor on ~48 published U.S. patents in the fields of optical technologies, communication systems, signal processing, and networks. According to Google Scholar, my publications have been cited over 51,000 times. Moreover, according to Web of Science, my 2012 Nature Photonics (journal impact factor approximately 32) paper has greater than 5300 citations and is the Number 2 most cited original paper and Number 6 most cited paper overall in Nature Photonics' approximately 18-year history. Nature Photonics is considered one of the most prestigious and selective journals in optics and photonics.

17. Over the past approximately 34 years, I have taught full and short courses (at universities and international conferences) on a variety of subjects, including optical fiber communication systems. I have taught thousands of students,

including ~65 graduate students who obtained their Ph.D. degrees under my guidance.

III. MATERIALS CONSIDERED

18. In forming my opinions, I have relied on my own knowledge and experience, including my education, training, and work experience in the field of optical communications technologies, my research and teaching experience, my experience in working with others in this field, and my experience in the design, development, and operation of relevant systems. I have considered the following materials:

- ’887 Patent [Exhibit 1001];
- File history of the ’887 Patent [Exhibit 1002];
- Petition for *Inter Partes* Review of the ’887 Patent;
- Declaration of Dr. Michael Lebby in support of the petition for *Inter Partes* Review of the ’887 Patent [Exhibit 1003];
- Art cited in the Petition for *Inter Partes* Review of the ’887 Patent [Exhibits 1004-1006];
- Any other materials described or cited in this declaration.

19. I reserve the right to supplement, amend, or modify the opinions provided in this declaration based on any new information that may emerge in this proceeding if the Petition is granted.

IV. LEGAL PRINCIPLES

20. I am not an attorney and offer no legal opinions. For the purposes of this declaration, I have been informed by counsel about certain aspects of the law that are relevant to my opinions. My understanding of the relevant law is summarized below.

Interpretation of Claims

21. I understand that for purposes of this IPR, the claim terms generally should be given their plain and ordinary meaning as understood by a person of ordinary skill in the art ("POSITA") at the time the patent application was filed, unless that meaning is inconsistent with the patent specification or the patent's history of examination by the U.S. Patent and Trademark Office ("USPTO").

22. I understand that a POSITA is deemed to read the claims in the context of the entire patent, including the specification and prosecution history, which is referred to as the intrinsic record. In other words, the terms are not considered in a vacuum. While the intrinsic record may inform the construction of a claim term, one

must be careful not to read words into the claims from the specification and preferred embodiments as the language of the claims controls.

23. I understand that the meaning of the claim terms will depart from their plain and ordinary meaning only when the patentee has acted as its own lexicographer (e.g., provided its own special meaning to a claim term) or clearly and unambiguously disavowed or disclaimed any claim scope.

24. I understand that reference materials that were publicly available at the time that the patent application was filed, such as dictionaries, treatises or other technical references, may provide context and background for deciphering how a POSITA would have considered the terms used in the claims. However, I understand that such references are known as "extrinsic evidence" and are accorded less weight than evidence found within the patent and prosecution history. In addition, I understand that extrinsic evidence that is inconsistent with the claims, specification, or prosecution history should not be considered in the claim construction process.

25. I understand that in this IPR, Petitioner has the burden of proving that each Challenged Claim is unpatentable by a preponderance of the evidence.

A. Anticipation

26. I understand that if a claim is invalid as anticipated, a single prior art reference must disclose each and every element of the claim. I further understand

that the reference must not only disclose every element of the claim, but it must disclose those elements as arranged in the claim. I understand that even slight differences between a prior art reference and the claimed invention may make a showing of anticipation insufficient.

Obviousness

27. I understand that a patent claim is "obvious" and therefore invalid when the differences between the claimed subject matter of the patent and the prior art are such that the subject matter, as a whole, would have been obvious at the time the invention was made to a person having ordinary skill in the art to which the subject matter pertains.

28. I also understand that there are several factors to consider with respect to the question of obviousness: (a) the scope and content of the prior art; (b) the level of ordinary skill in the art; (c) the differences between the claimed invention and the prior art; and (d) secondary considerations of non-obviousness, such as any commercial success, copying, prior failure by others, licenses, longstanding need, and unexpected results.

29. I understand that it is improper to rely on hindsight to establish obviousness because the test for obviousness is what would have been obvious at the time the invention was made to a person having ordinary skill in the art to which the subject matter pertains. I also understand that the scope and content of the prior

art must be viewed through the perspective of a person of ordinary skill in the art at the time of the invention.

30. I understand that a patent claim with multiple elements is not proved obvious by merely showing that each element was independently known in the prior art, whether those elements are in a single reference or in a combination of references. Instead, it must be shown that it would have been obvious to arrange the elements in the same way as in the claim.

31. I understand that when an obviousness determination relies on a combination of two or more references, there must be a motivation that would lead one of ordinary skill in the art to combine these prior art references.

32. I understand that if the modification of a prior art reference would cause the prior art to be unsatisfactory or inoperable for its intended purpose, then there is no motivation to combine the prior art references, and the obviousness argument would fail.

33. I understand that if a proposed modification of a prior art reference would change the principle of operation of the prior art, then there is no motivation to combine the references, and the obviousness argument would fail.

34. I understand that certain objective evidence of non-obviousness, or secondary considerations may support a determination of non-obviousness and must

be considered in an obviousness analysis. I understand that secondary considerations of non-obviousness may include:

a. Whether the invention was commercially successful as a result of the merits of the claimed invention;

b. Whether the invention satisfied a long-felt need for the solution;

c. Whether others had tried and failed to make the invention;

d. Whether others copied the invention;

e. Whether the invention achieved unexpected results; and

f. Whether others in the field accepted the claimed invention as shown by praise for the invention or from licensing of the invention.

35. I understand that for evidence of secondary considerations to be relevant to the obviousness inquiry, there must be a relationship or nexus between the advantages and features of the claimed invention and the evidence of secondary considerations.

36. I understand that if a claim is not obvious, then the claims that depend from it are not obvious.

V. LEVEL OF ORDINARY SKILL IN THE ART

37. For my analysis, I have been asked to assume that the relevant date for my analysis is the priority date of the ’887 Patent application, which I understand is on or about January 8, 2020.

38. I understand that Petitioners assert “[a]t the effective filing date of the ’887 patent, a person of ordinary skill in the art (‘POSITA’) would have had (1) a bachelor’s degree in electrical or electronics engineering or an equivalent degree, and (2) 2-4 years of work experience in optoelectronics, optical networking, optical communications, or a closely related field.” *See* Petition at pp. 13.

39. For the purposes of my analysis for this declaration, I assume that a POSITA as of the priority date of the ’887 Patent would have had this level of skill.

40. I am qualified as a person having at least this level of skill and was so at the time of the priority date of the ’887 Patent. Based on my education, training, and professional experience, I am familiar with the level and abilities of a POSITA. Indeed, I have participated in professional organizations and have taught, trained, and worked closely with many such persons over the course of my career, including prior to and around the time of the claimed invention.

41. I provide my analysis and opinions in this declaration from the perspective of a POSITA as proposed in the Petition.

VI. SUMMARY OF OPINIONS FORMED

42. This declaration explains the opinions that I have formed based on my analysis.

43. It is my opinion, from a technical point of view, that Petitioners and Dr. Lebby have failed to show that claims 1-3 and 8-12 of the ’887 Patent are invalid based on the grounds asserted in the Petition.

44. As discussed herein, Grounds 1-3 fail to demonstrate that independent claims 1 and 10 of the ’887 Patent are invalid, and therefore the Petition also fails to demonstrate invalidity of claims 2-3 and 8-9, which depend from claim 1, and claims 11-12 which depend from claim 10.

45. I have reviewed the Petition and the associated Declaration of Dr. Lebby and disagree with many of the assertions made therein. However, for purposes of my analysis, I only opine on certain positions taken by Petitioners and Dr. Lebby as explained in more detail below. To the extent that I do not specifically reference any particular paragraph(s) or portions of paragraphs of the Petition or Dr. Lebby’s Declaration, this does not mean that I agree with or accept any of the statements or opinions expressed in those paragraphs.

VII. TECHNOLOGY BACKGROUND

46. An optical transceiver is a device that can both transmit and receive data. Typically, data is encoded at relatively high data rates onto an optical wave and subsequently sent over an optical fiber, in many cases across long distances.

47. The term transceiver combines the words transmitter and receiver. Thus, an optical transceiver is commonly considered to include both a transmitter and a receiver. The transmitter and receiver may share common circuitry and/or housing.

48. An optical transceiver converts data from electrical signals into optical signals that can typically be transmitted over fiber optic cables, and it receives optical data signals that the transceiver converts into electrical signals.

49. Optical transceivers that include multiple wavelength-specific lasers can convert electrical data signals into multiple independent optical data signals. These electrical data signals may be received from devices such as electronic data switches. Each electrical data signal is converted into an optical signal with a different, unique wavelength.

50. If multiple independent data streams are simultaneously transmitted on multiple wavelengths, with each data stream on a different wavelength, such a system can transmit higher total capacity and is commonly called a wavelength-division-multiplexed (WDM) system.

51. Optical transceiver modules are used in optical communication and networking systems because they typically provide reliable data transmission in a cost-effective package.

52. Optical transceiver modules can be plugged into or embedded in a network device. A number of different types of optical transceiver modules exist, and they come in a variety of shapes and sizes. The different types of optical transceivers can typically be defined by form factors.

53. Optical transceivers are used in many industries. For example, they are important in telecommunication applications, such as for cable TV providers and data centers/server centers.

54. Moreover, cell phone providers using high-speed networks, such as 4G and 5G, can use optical transceivers to transmit data over fiber optic cables to connect cell towers and related networks.

55. A pluggable optical transceiver is often called a modular optical transceiver. Pluggable optical transceivers can provide improved connectivity and internet efficiency for a large number of simultaneous users.

56. Pluggable optical transceivers can be used for telecommunications and data communications in both commercial and residential applications. They can plug into ports on network devices, such as switches, routers, or network interface cards, to connect the various network components and allow transmission of data via fiber

optic cables Moreover, a pluggable optical transceiver can be conveniently unplugged when it needs to be replaced.

VIII. THE ’887 PATENT

A. Overview of the ’887 Patent

57. The ’887 Patent is generally directed to optical communication devices, and more particularly, to a substrate with a stepped profile for simplifying mounting and alignment of transmitter optical subassemblies (TOSA) modules, e.g., via edge mounting. The stepped profile enables mounting TOSA modules to the substrate in a recessed orientation to reduce the overall distance between terminals of the substrate and associated components of the TOSA, e.g., RF terminals of the substrate and an LDD of the TOSA. The stepped profile further simplifies mounting and optical alignment of TOSA modules by providing at least one mechanical stop to engage surfaces of the TOSA modules and limit travel by the same along one or more axis. *See* Exhibit 1001 at Abstract.

58. In the ’887 Patent, “each of the plurality of TOSA modules 205-1 to 205-4 mount, e.g., edge mount, to the first end 203 of the substrate. The transceiver substrate 202 further includes a stepped profile, with the stepped profile being at least partially defined by a step/shoulder 211 proximate the first end 203.” *See id.* at Col. 6:16-21.

59. This is shown in Figures 2 and 3 of the ’887 Patent.

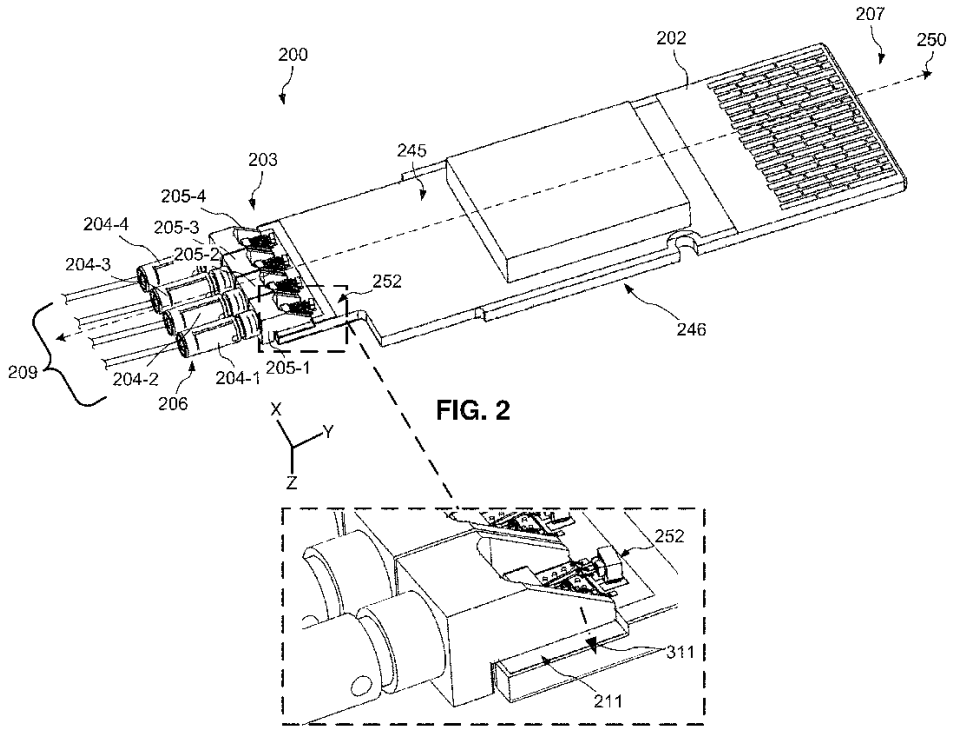

FIG. 2

FIG. 3

60. Each of the TOSA modules 205-1 to 205-4 can include a base with a plurality of sidewalls that define a generally L-shaped profile that corresponds with the step 211. The profile of the base may therefore advantageously align along at least two axes, e.g., the X and Z axis, by simply engaging and bottoming out against surfaces of the step 211 that operate as an alignment guide by providing mechanical stops and limits to limit travel along at least one axis. Alignment along the remaining axis, e.g., the Y axis, may therefore be performed by relatively simply lateral movement (e.g., along the X axis) of each TOSA module 205-1 to 205-4. *See id.* at Col. 6:21-34.

61. Additional aspects of the stepped profile are shown below in figures 7A-7B.

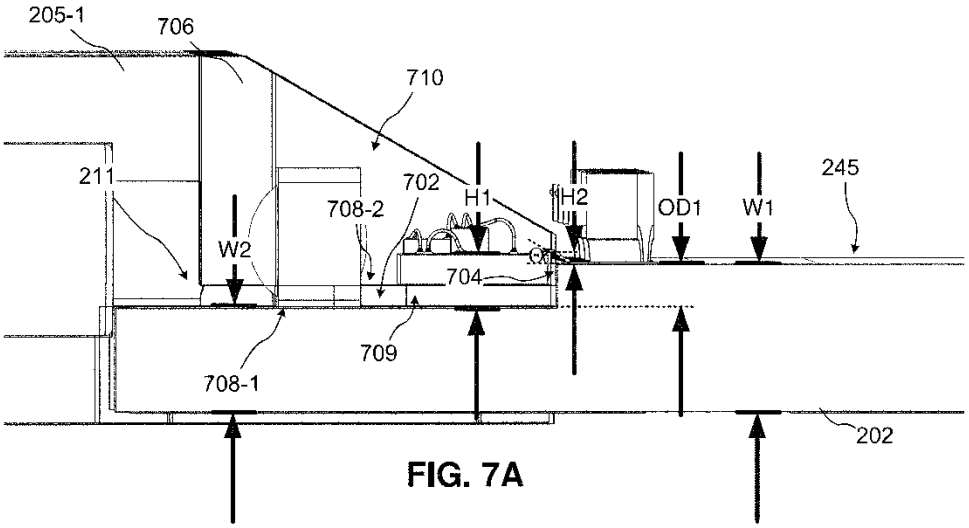

FIG. 7A

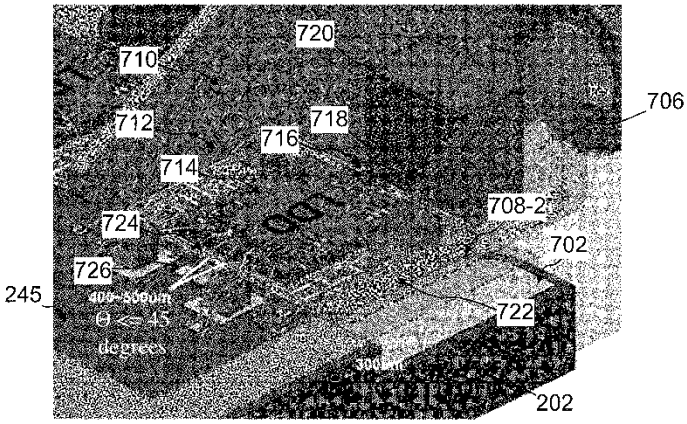

FIG. 7B

62. As further shown in FIG. 7A, the first TOSA module 205-1 includes a body 706 (or base) configured to securely mount, e.g., edge mount, to the second mounting region of the substrate 202. The body 706 includes a plurality of sidewalls that provide a substrate mating surface 708-1 and a component mounting surface 708-2. *See id.* at Col. 11:28-55.

B. Prosecution History of the ’887 Patent

63. Application no. 16/737,438 for the ’887 Patent was filed on January 8, 2020 with two independent claims, claims 1 and 12. *See* “’887 Patent File History,” Exhibit 1002.

64. In a final office action dated February 19, 2021, the examiner rejected independent claims 1 and 12 under 35 U.S.C. 103 as being unpatentable over Wu *et al.* (U.S. Patent Application Publication No: 2014/0105612 Al) in view of Pezeshki *et al.* (U.S. Patent Application Publication No: 2019/0278035 Al). In the office action, the examiner noted, “Wu differs from the claimed invention in that Wu does not specifically disclose the second mounting region at the optical coupling end of the substrate is configured to edge mount to the at least one TOSA module such that a portion of the at least one TOSA module extends from the optical coupling end of the substrate when the at least one TOSA module is coupled thereto. However, positioning of a TOSA module, for example, edge mounting of TOSA module, such that a portion of TOSA module extends from the optical coupling end of a substrate, is merely a matter of design choice and a specific system requirement.” *Id.* at p. 52-53.

65. In response, the applicant argued: “Independent claim 1 includes, *inter alia*, ‘<u>wherein the second mounting region at the optical coupling end of the substrate is configured to edge mount to the at least one TOSA module</u>.’ Independent claim

12 includes, *inter alia*, 'at least one TOSA module edge mounted to the optical coupling end of the transceiver substrate.' The Office Action correctly notes that Wu fails to teach at least the above-recited features." Applicant further argued, "an obviousness rejection based on a 'rearrangement of parts' is only applicable to reject the claims when the change does not modify the operation of the device…. to edge mount the laser diodes/optoelectronic device 12 of Wu would certainly change the operation, complicate optical alignment, *and likely prevent the use of the MT connector that Wu aims to utilize*." Applicant also amended independent claims 1 and 12 to include, *inter alia*, "wherein the vertical surface provides a mechanical stop to engage a surface of the least one TOSA module and limit travel of the at least one TOSA module along one or more axis." *Id.* at p. 39 (all emphasis in original).

66. In response, the examiner issued a Notice of Allowance on August 9, 2021. *Id.* at pp. 8-12. The '887 Patent issued on November 16, 2021 with 13 claims, including two independent claim 1 and 12. *See* '887 Patent (Exhibit 1001).

IX. GROUND 1

A. Overview of Kuhara (Exhibit 1004)

67. Kuhara discloses "an optical data link that includes a circuit board and an optical module component. The circuit board includes first and second mounting sections. A step is formed between the first mounting section and the second

mounting section. The first mounting section has the optical module component, and the second mounting section has an electron device. The optical module component includes a mounting component, a semiconductor optical device, and an optical transmission medium. The semiconductor optical device of the optical module component is electrically connected to the electron device, and is mounted on a first region of the mounting component. The optical transmission medium is supported by a second region of the mounting component, and is optically coupled with the semiconductor optical device." *See* Exhibit 1004 at Abstract.

68. This is shown in Figures 1A, 1B, and 2 of Kuhara.

FIG. 1 (A)

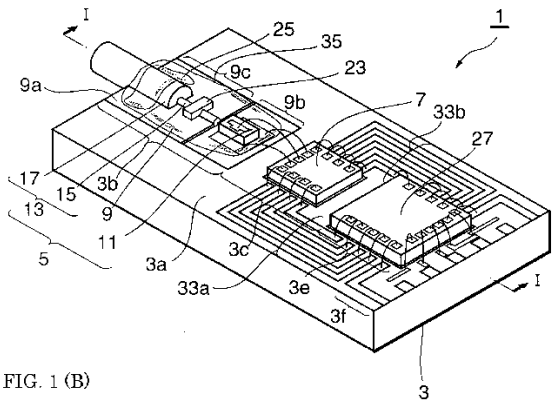

FIG. 1 (B)

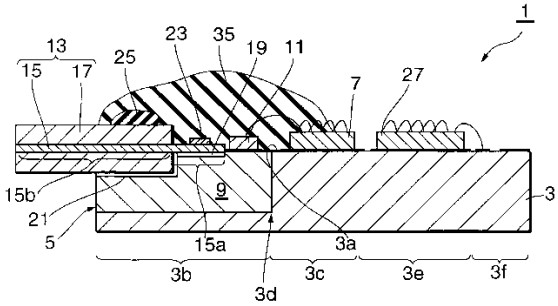

FIG. 2

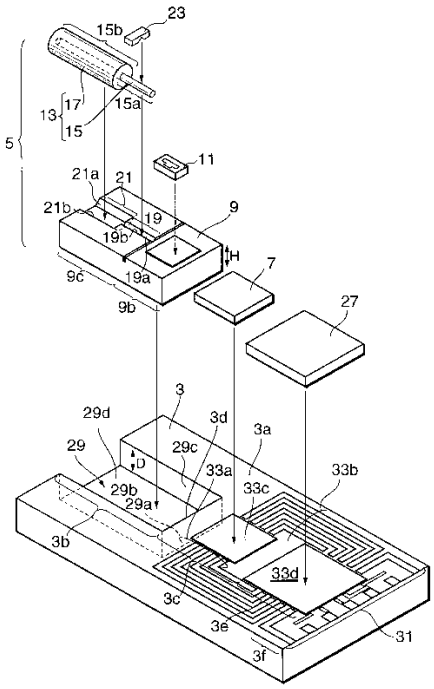

B. Opinions Regarding Ground 1

69. In my opinion, based on the following analysis, Petitioner and its expert, Dr. Lebby, have not shown that claims 1-3 of the ’887 patent are invalid as anticipated by Kuhara.

1. Petitioner and Dr. Lebby fail to show Kuhara discloses “wherein the second mounting region at the optical coupling end of the substrate is configured to edge mount to the at least one TOSA module” as required by Claim 1 of the ’887 Patent

70. In my opinion, Petitioner and Dr. Lebby have failed to show that Kuhura discloses “wherein the second mounting region at the optical coupling end of the substrate is configured to edge mount to the at least one TOSA module” as required by Claim 1 of the ’887 Patent.

71. As discussed, in the ’887 Patent, each of the plurality of TOSA modules (205-1 to 205-4) mount, e.g., edge mount, to the first end 203 of the substrate 202. The transceiver substrate 202 further includes a stepped profile, with the stepped profile being at least partially defined by a step/shoulder 211 proximate to the first end 203. *See* Exhibit 1001 at Col. 6:16-21. Each of the TOSA modules 205-1 to 205-4 can include a base with a plurality of sidewalls that define a generally L-shaped profile that corresponds with the step 211. The profile of the base may therefore advantageously align along at least two axes, e.g., the X and Z axis, by simply engaging and bottoming out against surfaces of the step 211 that operate as

an alignment guide by providing mechanical stops and limits to limit travel along at least one axis. Alignment along the remaining axis, e.g., the Y axis, may therefore be performed by relatively simply lateral movement (e.g., along the X axis) of each TOSA module 205-1 to 205-4. *See id.* at Col. 6:21-34

72. This is shown in Figures 2 and 3 of the ’887 Patent.

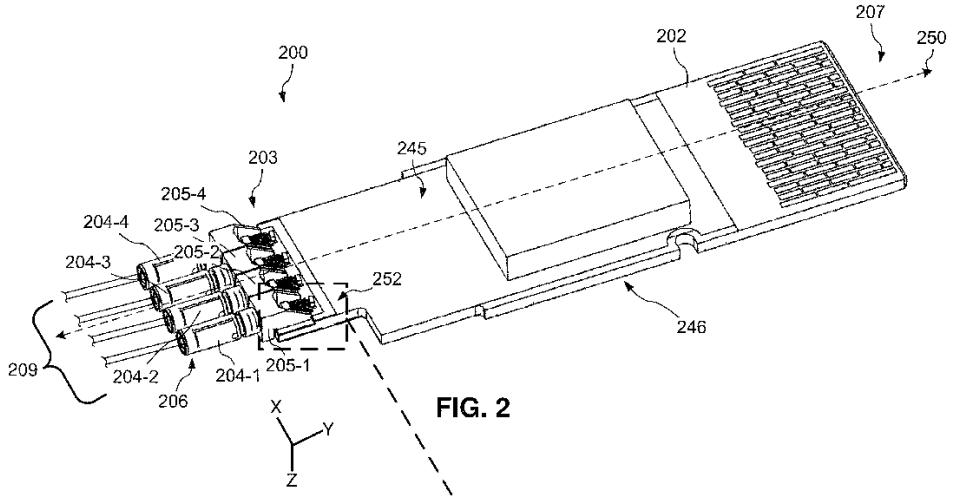

FIG. 2

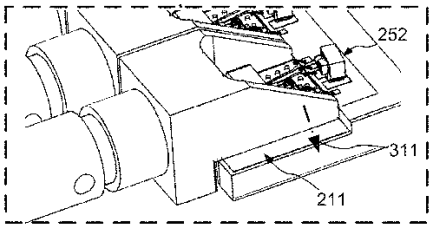

FIG. 3

73. In contrast, in Kuhara, the optical module component 5 (the asserted TOSA module as identified by Petitioner and Dr. Lebby) is not edge mounted to the circuit board 3 (the asserted substrate as identified by Petitioner and Dr. Lebby) as disclosed and claimed in the ’887 Patent. Instead, the optical module component 5 is mounted on the top surface 29 of the second mounting section of the circuit board 3 from Kuhara. This is shown in Figures 1A, 1B, and 2 of Kuhara (Exhibit 1004).

FIG. 2

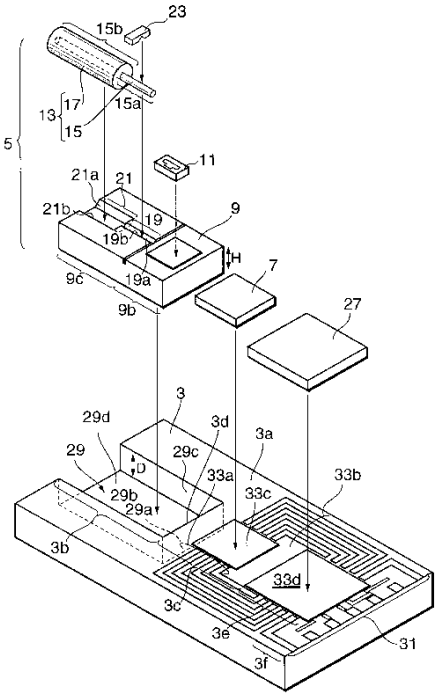

FIG. 1 (A)

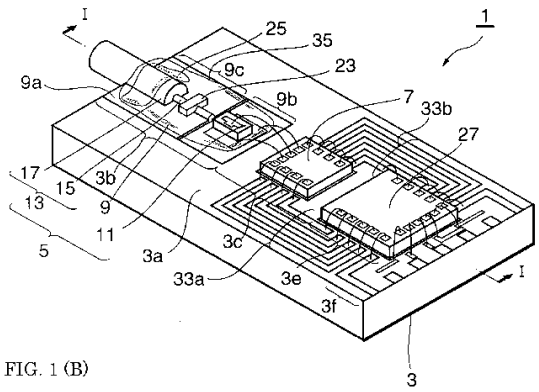

FIG. 1 (B)

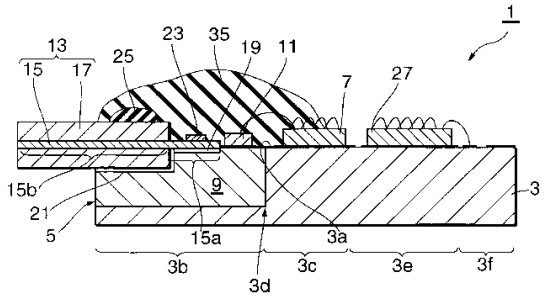

74. Thus, Petitioner and Dr. Lebby have not shown that Kuhara discloses "wherein the second mounting region at the optical coupling end of the substrate is configured to edge mount to the at least one TOSA module" as required by Claim 1 of the '887 Patent.

X. GROUND 2

75. Claim 10 of the '887 Patent requires, "at least one TOSA module edge mounted to the optical coupling end of the transceiver substrate." As discussed above for Claim 1, Petitioner and Dr. Lebby have failed to show that Kuhara

discloses "at least one TOSA module edge mounted to the optical coupling end of the transceiver substrate" as similarly required by Claim 10 of the '887 Patent.

76. Claims 8 and 12 of the '887 Patent depend from Claims 1 and 10, respectfully. Because Petitioner and Dr. Lebby have not shown that Kuhara anticipates Claim 1 and renders obvious Claim 10, Petitioner and Dr. Lebby have also have not shown that Kuhara renders obvious Claims 8 and 12.

XI. GROUND 3

77. Claim 10 of the '887 Patent requires, "at least one TOSA module edge mounted to the optical coupling end of the transceiver substrate." As discussed above for Claim 1, Petitioner and Dr. Lebby have failed to show that Kuhura discloses "at least one TOSA module edge mounted to the optical coupling end of the transceiver substrate" as similarly required by Claim 10 of the '887 Patent. Petitioner and Dr. Lebby do not argue or assert that Ho discloses this limitation.

78. Claims 8-9 and 11-12 of the '887 Patent depend from Claims 1 and 10, respectfully. Because Petitioner and Dr. Lebby have not shown that Kuhara anticipates Claim 1 and renders obvious Claim 10, Petitioner and Dr. Lebby have also have not shown that Kuhara renders obvious Claims 8-9 and 11-12.

AFFIRMATION

79. I hereby declare that all statements made of my own knowledge are true

and that all statements made on information and belief are believed to be true, and further that these statements were made with the knowledge that willful false statements and the like so made are punishable by fine or imprisonment, or both, under Section 1001 of Title 18 of the United States Code.

Alan Willner

March 3, 2026

Alan E. Willner

Date

EXHIBIT A

Biographical Sketch: Alan E. Willner

Alan Willner received a Ph.D. (1988) in Electrical Engineering from Columbia University and a B.A. (1982) in Physics and an Honorary Doctorate (*Honoris Causa*, 2012) from Yeshiva University. Prof. Willner was a Postdoctoral Member of Technical Staff at AT&T Bell Labs and a Member of Technical Staff at Bellcore. He is currently *Distinguished Professor of Electrical & Computer Engineering* and the *Andrew & Erna Viterbi Professorial Chair* in the Ming Hsieh Dept. of Electrical & Computer Eng. of the Viterbi School of Eng. at the Univ. of Southern California; he also has a joint appointment with Dept. of Physics & Astronomy of the Dornsife College. Prof. Willner has been a Visiting Professor at Columbia Univ., Univ. College London, and Weizmann Institute of Science. He has been a Member of the U.S. Army Science Board, a Member of the Defense Sciences Research Council (16-member body that provided reports to DARPA Director & Office Directors), and a member of many technical advisory boards. He was also Founder & CTO of Phaethon Communications, a company whose technology was acquired by Teraxion, that created the ClearSpectrum® dispersion compensator product line which is presently deployed in many commercial systems worldwide.

Prof. Willner has received the following honors: Member of the U.S. National Academy of Engineering, International Fellow of the U.K. Royal Academy of Engineering, Presidential Faculty Fellows Award from the White House, Ellis Island Medal of Honor, IEEE Eric Sumner Technical Field Award, Packard Foundation Fellowship in Science & Engineering, John Guggenheim Foundation Fellowship, U.S. Dept. of Defense Vannevar Bush Faculty Fellowship, Fellow of National Academy of Inventors, Institution of Eng. & Tech. (IET) J.J. Thomson Medal, Thomas Egleston Medal for Distinguished Engineering Achievement (highest eng. award from Columbia Eng. Alumni Association), Optica (formerly Optical Society, OSA) Paul Forman Engineering Excellence Award, IEEE Photonics Society Engineering Achievement Award, National Science Foundation National Young Investigator Award, Fulbright Foundation Senior Scholar Lecture & Research Fellowship, Honorary Professor of Huazhong Univ. of Science & Technology, Civilian Service Commendation Medal (US Dept. of the Army), IEEE Photonics Society Distinguished Lecturer Award, SPIE President's Award, IEEE Photonics Society Distinguished Service Award, USC Associates Award for University-Wide Creativity in Research (highest USC research award), USC Associates Award for University-Wide Excellence in Teaching (highest USC teaching award), OSA Robert Hopkins Leadership Award, USC Phi Kappa Phi Faculty Recognition Award (for significant scholarly work), Member of European Academy of Sciences and Arts, USC Senior Engineering Research Award, USC Best Engineering Teacher Award, 2001 Eddy Paper Award from Pennwell Publications for Best Contributed Technical Article (across all 30 magazines in Pennwell's Advanced Technology Division), IEEE Globecom Best Paper Award, and Edwin Howard Armstrong Foundation Memorial Award for highest-ranked EE Masters student at Columbia University. He is a Fellow of AAAS, APS, IEEE, IET, OSA, SPIE, and AAIA, and he was a Fellow of the Semiconductor Research Corporation. Prof. Willner was an invited foreign dignitary representing the sciences for the 2009 Nobel Prize Ceremonies in Stockholm.

Prof. Willner's activities include: Co-Chair of U.S. National Academies' Study on Optics & Photonics, President of the OSA, President of the IEEE Photonics Society (formerly LEOS), Co-Chair of OSA Science & Engineering Council, Vice-President for Technical Affairs of IEEE Photonics Society, Editor-in-Chief of OSA Optics Letters, Editor-in-Chief of the IEEE/OSA Journal of Lightwave Technology (JLT), Editor-in-Chief of the IEEE Journal of Selected Topics in Quantum Electronics, Associate Editor of the IEEE Journal of Selected Areas in Communications Series on Optical Networks, Photonics Division Chair of OSA, Chair of IEEE TAB Ethics and Member Conduct Committee, Chair of the National Photonics Initiative, General Co-Chair of the Conference on Lasers and Electro-Optics, Program Co-Chair of OSA Annual Meeting, General Chair of IEEE Photonics Society Annual Meeting, Program Chair of Telecommunications Engineering at SPIE's Photonics West, and Chair of the Unclassified Technical Program for IEEE MILCOM.

Prof. Willner has ≥1750 publications (*h-index ≥94, ≥49,300 citations, Google Scholar*), including 1 book, ~10 edited books, ~48 US patents, ~56 keynotes/plenaries, ~26 book chapters, >470 refereed journal papers, and >380 invited papers/presentations. His 2012 Nature Photonics (impact factor ~32) paper has >5000 citations and is the #2 most cited original paper and #6 most cited paper overall in Nature Photonics' ~18-year history. His research is primarily in optical technologies (e.g., communications, signal processing, networks, and subsystems).

FULL CV: ALAN ELI WILLNER

ADDRESS: EEB 538, Dept. of Electrical Engineering, Viterbi School of Engineering, USC, LA, CA 90089-2565, 213-740-4664, F: 213-740-8729, willner@usc.edu

EDUCATION:

Columbia University - Ph.D. - Electrical Engineering - Aug. 1988 (defended). Thesis Advisor - **Prof. Richard Osgood, Jr.,** Thesis Title: Laser-Controlled Photochemical Etching of Semiconductors for Electro-optical Devices

Columbia University - M.S. - Electrical Engineering (1984)
Overall Columbia grade index - **4.11** (A = 4.0)

Yeshiva University - B.A.- Physics (1982). Grade index - **3.96** (A = 4.0)

WORK EXPERIENCE:

Fall '10 - present	**Distinguished Prof. ('21), Ming Hsieh Dept. of Electrical & Computer Eng., Andrew & Erna Viterbi Professorial Chair ('22)** **Steven & Kathryn Sample Chair in Eng. ('10-'22), Viterbi School of Eng., Joint Appointment w/ Dept. of Physics & Astronomy, Dornsife College ('22)** **University of Southern California** · Optical Communication Systems and Networks
Mar. '15 - present	Visiting Prof ('15), then Adj. Senior Res. Scientist, Elec Eng Dept, Columbia Univ
Sept. '17 - present	Visiting Scholar, Yeshiva College and Stern College for Women, Yeshiva Univ.
Fall '98 – Spring '10	Professor, Ming Hsieh Dept. of Electrical Eng., USC
Sept. '09 –June '14	Member**, Defense Sciences Research Council**, Consultant to Booz Allen · Council performed studies that were presented to DARPA Director & Office Directors
Fall '07 - Summer '12	**Co-Director,** Communications Sciences Institute, EE Dept. Exec. Comm., USC
Fall '07 -Summer '17	Visiting Professor, Dept. of Electronic & Electrical Eng., Univ. College London
Nov. '99 - Nov. '02	**Founder** & **CTO**, Phaethon Communications (technology acquired by Teraxion) · Created the **ClearSpectrum**®dispersion compensator product line · ClearSpectrum®presently deployed in many commercial 40-Gbit/s systems
Aug. '94 - Sept. '98	Associate Professor, Dept. of EE - Systems, USC
April '96 - June '04	Associate Director, Student Affairs, NSF-Sponsored Engineering Research Center in Integrated Media Systems, USC
Spring '98	**Visiting Fulbright Prof.**, Physics Dept., Weizmann Institute of Science, Israel
Apr. '94 – Present	Associate Director, Center for Photonic Technology (CPT), USC
Jan. '92 - Present	**Director, Optical Communications Laboratory**, USC
Jan. '92 - July '94	Assistant Professor, Dept. of EE - Systems, USC
Nov. '90 - Jan. '92	**Member of Technical Staff**, **Bell Comm. Research**, Photonics Research Dept. · Fiber Optic Wavelength-Division-Multiplexed Communication Systems
Oct. '88 - Oct. '90	**Postdoctoral Member of the Technical Staff**, Crawford Hill Lab **AT&T Bell Laboratories**, Photonics Networks and Components Research Department, Postdoctoral Supervisor: **Dr. Ivan Kaminow**
Sept. '84 - Aug. '88	Graduate Research Assistant, **Columbia University**, Microelectronics Science Lab & NSF Center for Telecommunications Research
Fall '87	**Instructor**, **Columbia Univ.**, "Fundamentals of Circuits and Systems"
June '87	Visiting Scientist, Naval Research Laboratory - Modulation Spectroscopy
Summers '83, '84	Summer Technical Staff, **David Sarnoff Research Center, RCA Labs**
Fall '83	Teaching Assistant, Columbia Univ., Solid State Devices

HONORS:

Member, U.S. National Academy of Engineering ('16)

U.K. Royal Academy of Engineering ('10)

Of the 4 International Fellows elected from the US in '10, the other 3 were Drs. Howard Bruschi (former Westinghouse CTO), Robert Langer (MIT Institute Prof.) and Charles Vest (former MIT President and NAE President).

Ellis Island Medal of Honor ('20)

Awarded annually to a group of distinguished American citizens who exemplify a life dedicated to their community and the world at large.

IEEE Eric E. Sumner Award ('14)

One "Technical Field Award" in Communications from the entire IEEE.

Vannevar Bush Faculty Fellowship (U.S. DoD) ('16)

Formerly Defense Security Science & Eng. Faculty Fellowship (NSSEFF)

This is considered the DoD's most prestigious single-investigator research award.

J. J. Thomson Medal for Achievement in Electronics, Institution of Engineering & Technology (IET) ('16)

Civilian Service Commendation Medal, US Department of the Army ('21)

"For outstanding service as a member of the Army Science Board."

Distinguished Professor of Electrical and Computer Engineering at USC ('21)

Andrew and Erna Viterbi Endowed Professorial Chair at USC ('22)

Inaugural holder of endowed chair named for Dr. & Mrs. Viterbi.

Steven and Kathryn Sample Endowed Chair in Engineering at USC ('10)

Inaugural holder of endowed chair named after the former USC president.

Fellow of the National Academy of Inventors ('15)

***'09 Nobel Prize Ceremonies*, "invited foreign dignitary representing sciences"**

Thomas Egleston Medal for Distinguished Engineering Achievement ('17)

Highest honor given to a Columbia engineering graduate for a lifetime of achievement in the engineering profession by the Columbia University Engineering Alumni Association. Notable previous winners include Edwin H. Armstrong, Harvey S. Mudd, and Hyman G. Rickover.

Member, European Academy of Sciences and Arts ('21)

Albert Nelson Marquis Lifetime Achievement Award from Marquis Who's Who Publications Board ('17)

Viterbi School of Engineering Senior Research Award ('19)

Honorary Professor, Huazhong Univ. of Science & Technology (HUST) ('16)

HUST is ranked as of one of the top 10 universities in China.

Honorary Doctorate, *Honoris Causa*, Yeshiva University, Commencement ('12)

John Simon Guggenheim Foundation Fellowship ('12)

HONORS: (CONTINUED)

Presidential Faculty Fellows Award ('94)
30 awards are given annually by the **White House** to faculty in all areas of science and engineering. Sponsored by the NSF.

David & Lucile Packard Foundation Fellowship in Science & Eng. ('93)
20 awards given annually in science and eng.
One of three engineering awards.

NSF National Young Investigator Award ('92)
Formerly the **Presidential** YI Award.

Fulbright Foundation Senior Scholar Fellowship Award ('98)
Pursue research and lecturing at the Weizmann Institute of Science.

Optical Society of America (OSA) Paul Forman Eng. Excellence Award ('10)
One award given in 2010 for technical achievements in optical engineering.

IEEE Photonics Society Engineering Achievement Award ('11)
One award given in 2011 for technical achievements in photonics.

Optical Society of America (OSA) Leadership Award / New Focus Prize ('09)
One given for significant contribution to society or impact on optics.

SPIE President's Award ('13)

Fellow – American Physical Society (APS) ('21)

Fellow – American Assoc. for the Advancement of Science (AAAS) ('12)

Fellow – Institute of Electronic and Electrical Engineers (IEEE) ('04)

Fellow - Optical Society of America (OSA) ('96)

Fellow – Society for Photo-Instrumentation Engineers (SPIE) ('10)

Fellow - Institution of Engineering & Technology (IET) ('16)

Fellow – Asia-Pacific Artificial Intelligence Association (AAIA) ('22)

Best Contributed Technical Article, '01 Eddy Award, Pennwell Publications
One award from all 30 magazines in Pennwell's Advanced Technology Division.

Best Paper Award, IEEE Globecom Conference ('14)

Paper Selected as one of the '07 Highlights of *Nature Photonics* by its Editors
Paper Selected: NP, vol. **1**, no. 2, pp. 87-88, 2007.

USC Associates Award, University-Wide Creativity in Research ('12)
Two awards given from >2,000 professors at USC. Highest research award.

USC Associates Award, University-Wide Excellence in Teaching ('03)
Two awards given from >2,000 professors at USC. Highest teaching award.

Phi Kappa Phi Faculty Recognition Award ('16)
4 given at USC Academic Honors Convocation for significant scholarly work

IEEE Photonics Society **Distinguished Lecturer Award** (99', 00')
4 annual awards to present a distinguished lecture to local chapters worldwide.

HONORS: (CONTINUED)

IEEE Photonics Society Distinguished Service Award '03
1 annual award that recognizes exceptional individual contribution of service.
HP Labs Research Innovation Award '08, '09,'10 (see also *Grants*)
Northrop USC Outstanding Junior Eng. Faculty Research Award '94
Given to the **highest ranked** Asst. Prof. in the USC School of Engineering.
Phi Kappa Phi Academic Honor Society, Faculty Inductee '04
Northrop/USC Best Electrical Eng. Research Impact Faculty Award '05
TRW USC School of Engineering Best Teacher Award '99
Teaching award given to the highest ranked teacher in the School of Eng.
NSF Alan T. Waterman Award Finalist ('95, '96, and '97)
Outstanding Teaching Award, Elec. Eng. Dept., USC Eng. School ('95, '97)
The Okawa Foundation Research Award '00
Senior Member – IEEE ('94)
Taiwan Government Travel Grant ('08)
"Academician of Academia Sinica or International Renowned Scholar"
Edwin Howard Armstrong Foundation Memorial Award
Given to the **highest ranked** Columbia Univ. Elec. Eng. Masters Student
IEEE LEOS Figure Contest Winner (L. Zhang, et al.) ('08)
Fellow - Semiconductor Research Corporation - Doctoral Research
Representing Business Professionals from the State of California in Who's Who in America 2020 ('20)
Top 2% Most-cited Scientists Listed by Stanford University ('20)
Marquis Who's Who in America; … in the World; … in Science & Eng.
NATO/NSF Summer Fellowship (1985) - Italy
Columbia University Departmental Fellowship (9/83-5/86)
Dr. Samuel Belkin Scholar Award: Yeshiva University
Head Delegate to the Harvard Model United Nations from Yeshiva University
Magna Cum Laude: Yeshiva University
Student Council Member & Junior Class Vice-President: Yeshiva University
Valedictorian (high school); Editor-in-Chief, Yearbook (high school)

JOURNAL EDITOR:

Editor-in-Chief, OSA Optics Letters ('08-'13)

#1 ranked Optics publication for 2007 in terms of ISI Impact Factor

Editor-in-Chief, IEEE/OSA Journal of Lightwave Technology ('01-'06)

Editor-in-Chief, IEEE J. of Selected Topics in Quantum Electronics ('99-'01)

Associate Editor, IEEE/OSA J. of Optical Communications & Networking ('09-'11)

Associate Editor, IEEE Journal of Selected Areas in Communications,
Series on Optical Communications and Networks (2002-2009)

Associate Editor, IEEE/OSA Journal Lightwave Technology (1995-2000)

Guest Editor, MDPI Journal of Applied Sciences
Special Issue on Novel Insights into Orbital Angular Momentum Beams: From Fundamentals and Devices to Applications ('19)

Guest Co-Editor, Light: Science & Applications,
Special Issue, Twisted Light with Orbital Angular Momentum ('17)

Guest Editor, IEEE/OSA Journal of Lightwave Technology, Special Issue,
A Third of a Century of Lightwave Technology Jan. 1983-Apr. 2016 ('16)

Guest Editor, IEEE Journal of Selected Topics in Quantum Electronics,
Special Issue, Optical Waveguides: Technologies and Applications ('16)

Guest Editor, Nanophotonics (a de Gruyter journal),
Special Issue, Advances in Optical Fiber Technology ('14)

Guest Editor, IEEE Journal of Selected Topics in Quantum Electronics,
Special Issue, Optical Modulators - Technologies and Applications ('13)

Guest Editor, IEEE Journal of Selected Areas in Communications,
Special Issue, Next-Generation Broadband Optical Access Network Techn. ('10)

Guest Editor, Applied Physics-A (a Springer Verlag journal),
Special Issue on Photonic Interconnects (June 2009)

Guest Editor, IEEE/OSA Journal of Lightwave Technology,
Special Issue on the 25th Anniversary of JLT (May '08)

Guest Editor, OSA Journal of Optical Networking,
Special Issue on Optical Code-Division-Multiple-Access (2007)

Guest Editor, IEEE Journal of Selected Topics in Quantum Electronics, Special Millennium Issue (Dec. 2000)

Guest Editor, IEEE Journal of Quantum Electronics
Focus Issue on Ultra-High-Bandwidth Optical Transmission Systems (Nov. 1998)

Guest Editor, IEEE/OSA Journal of Lightwave Technology & IEEE Journal of Selected Areas in Communications, Joint Special Issue,
Multiple-Wavelength Technologies and Networks (June '96)

PROFESSIONAL ACTIVITIES:

Panel Member, Optica Fellow Nominations Webinar ('25)

Member, Technical Program Committee, Optical Sensing and Precision Metrology (OE305), SPIE Photonics West, San Francisco ('25, '26)

Member, the Frederic Ives Medal/Jarus W. Quinn Prize Selection Committee ('25-'27)

Member, National Academy of Engineering (NAE) Section 7 Search Committee ('24-'25)

Member, IEEE Edison Medal Selection Committee ('22-'24)

Member, External Advisory Committee,
Department of Electrical & Computer Engineering, Johns Hopkins University ('24-'27)

Co-Chair, Workshop on Orbital Angular Momentum Transmission,
IEEE International Conference on Communications (ICC), Denver ('24)

Member, International Scientific Committee,
International Conference on Optical Angular Momentum (ICOAM), South Africa ('24)

Member, Program Committee,
OPTICA Topical Meeting on Adaptive Optics: Methods, Analysis, and Applications ('24)

Co-Chair, International Workshop on High Capacity Wireless Communications, IEEE GLOBECOM ('23)

Member, Search Committee for Editor-in-Chief for the SPIE Journal of Nanophotonics ('23)

General Chair,
OptoElectronics and Communications Conference (OECC), Shanghai ('23)

Member, Technical Program Committee, Conference on High Contrast Metastructures XII, SPIE Photonics West ('23)

Co-chair, Yeshiva University Ad-Hoc Committee,
Explore the possibility of instituting and implementing a doctoral program in Applied Math (YUCAM) ('23)

Chair, Selection Committee for the Optica Foundation Challenge Contest ('22-'25)

PROFESSIONAL ACTIVITIES: (CONTINUED)

Co-Chair, Workshop on High-Capacity Wireless Communications
IEEE Global Communications Conference (GLOBECOM) ('22)

Chair, External Review Panel on Electronics Science and Technology Focus Area,
Naval Research Laboratory ('22)

Co-Chair, Technical Program Committee,
Workshop on Orbital Angular Momentum Transmission, IEEE International Conference on Communications (ICC) ('22)

Member, Tingye Li Memorial Scholarship Nomination Review Committee,
Photonics Society of Chinese Heritage (PSC) ('20-'25)

Workshop Participant, Crystal Ball Workshop,
The U.S. OSD R&E, USSF, and U.S. AFRL ('22)

Member, Organizing Committee, ComSoc Student Conference,
IEEE WCNC 2022 ('22)

Co-Lead of Photonics Group,
Future Directions Workshop on Wireless Communications: XG and Beyond,
Basic Research Office of the Office of the Under-Secretary of Defense,
Arlington, VA ('22)

Member, International Advisory Committee, Photonics Research Institute,
Hong Kong Polytechnic University ('22-'24)

General Co-Chair,
Asia Communications and Photonics Conference (ACP), Shanghai ('21)

Optica (formerly The Optical Society (OSA)) (Membership ~20,000)

Past-President (2017)
President (2016)
President-Elect (2015)
Elected Vice President (2014)

U.S. National Academy of Engineering, Member Search Committee, Section 7,
- **Chair** (2018)
- **Vice-Chair** (2017)
- **Past Chair** (2019)
- Member ('20-'24)

Member, Technical Program Committee,
Workshop on Orbital Angular Momentum Transmission, IEEE International Conference on Communications (ICC) ('21)

PROFESSIONAL ACTIVITIES: (CONTINUED)

Member, Technical Program Committee,
Adaptive Optics: Methods, Analysis and Applications, OSA Imaging and Applied Optics Congress ('20)

Co-Chair, Workshop on High-Capacity Wireless Communications
IEEE Global Communications Conference (GLOBECOM) ('20)

Member, Review Panel on Engineering Sciences at the Army Research Office, Laboratory Assessments Board, US National Academies ('20)

Member, Advisory Board, Advances in Optics and Photonics (AOP) ('20-'23)

Member, Technical Program Committee,
Workshop on Orbital Angular Momentum, IEEE International Communications Conference (ICC) ('20)

Member, Technical Program Committee,
OSA Topical Meeting on Adaptive Optics, OSA Imaging and Applied Optics Congress, Vancouver, Canada ('20)

Member, Technical Program Committee,
SPIE Photonics West, Advanced Optical Techniques for Quantum Information, Sensing, and Metrology conference ('20)

Co-Chair, Workshop on High-Capacity Point-to-Point Wireless Communications Program,
IEEE Global Communications Conference (GLOBECOM) ('19)

Co-Chair, Workshop on Electromagnetic Wave Transmission with Orbital Angular Momentum,
IEEE International Conference on Communications (ICC) ('19)

Member, Planning Committee,
DMMI Workshop on Domestic Manufacturing Capabilities for Critical DoD Applications: Emerging Needs in Quantum-enabled Systems, National Academies ('19)
Member, National Academies Review Panel
"***An Assessment of the National Institute of Standards and Technology Physical Measurements Laboratory***" ('19)

Member, Distinguished Service Award Committee,
IEEE Photonics Society ('19)

Honorary Chairs,
Asia Communications and Photonics Conference (ACP), Chengdu ('19)

PROFESSIONAL ACTIVITIES: (CONTINUED)

Co-Chair, Charles Kao's Symposium on Optical Fiber Communications, Asia Communications and Photonics Conference (ACP), Chengdu ('19)

Mentor, Undergraduate Engineering/Robotics Club
Yeshiva Univ. (Yeshiva College and Stern College) ('18-'19)

Member, Department of Defense Bush Fellows Research Study Team ('18-'20)

Member, OSA Nominating Committee ('17-'19)

Member, Editorial Board,
Progress in Electromagnetics Research (PIER) ('17-'23)

Member, Independent Technical Advisory Board,
DoD Applied Research for the Advancement of S&T Priorities (ARAP) Defense Optical Channel Program (DOC-P) ('17-'19)

Member, International Advisory Committee (IAC),
The Optics & Photonics Taiwan ('17)

Chair, Committee,
IEEE Eric Sumner Technical Field Award ('16-'18)

Member, SRI Technology Council ('16-'19)

Member, Technical Program Committee, Subcommittee Photonics in Switching System and Related Technologies, Photonics in Switching ('16)

General Co-Chair,
IEEE/OSA/SPIE Asia Communications & Photonics Conference, Wuhan ('16)

Co-Organizer, Workshop on Twisting Light with Orbital Angular Momentum (OAM): Advances and Opportunities,
IEEE/OSA/SPIE Asia Communications & Photonics Conf (ACP), Wuhan ('16)

National Spectrum Consortium (NSC) Representative, Subject Matter Expert, Communications Assessment Working Group ('16)

Member, Technical Program Committee,
SPIE Photonics West, Conference on Advances in Photonics of Quantum Computing, Memory, and Communication ('16-'19)

Member, Conference Program Committee,
SPIE Photonics West, High-Contrast Metastructures IV Conference ('15-'20)

PROFESSIONAL ACTIVITIES: (CONTINUED)

Chair, Steering Committee,
National Photonics Initiative (NPI) ('15-'17)

Member, Organizing Committee,
Conference FIAT LUX on the International Year of Light (IYL), Rome ('15)

Member, International Advisory Board,
School of Engineering Sciences (SES) of Huazhong University of Science and Technology (HUST), Wuhan, China ('14-'17)

Member, Technical Program Committee,
European Conference on Optical Communications (ECOC) ('13, '14, '15)

Member, Technical Program Committee, Systems Subcommittee,
Photonics in Switching ('13, '14)

Member, **U.S. Army Science Board** ('14-'20)

Member, **Foundation Board of Directors,** OSA ('14)

Member, **Advisory Board**, National Science Review ('14)

Consultant Member, U.S. Army Science Board ('13-'14)

Co-Organizer, Section on Optics and Photonics: An International Perspective,
American Association for the Advancement of Science (AAAS) Annual meeting, Chicago ('14)

Chair-Elect and Member, Steering Committee
National Photonics Initiative (NPI) ('13-'14)

Chair, Unclassified Technical Program,
IEEE MILCOM (San Diego, CA) (2013)

Co-Chair, U.S. National Academies Committee for NRC Study,
"***Optics and Photonics: Essential Technologies for Our Nation"*** (2011-2012)
Chair, Steering Committee,
APS/IEEE/OSA Conf. on Lasers & Electro-Optics (CLEO) ('08-'10&'10-'12)
Member, **Defense Science Research Council**,
Council submits reports to DARPA Director and Office Directors ('09-'14)

Elected Member-at-Large, Section on Engineering,
American Association for the Advancement of Science (AAAS) ('12-'16)

Member, 2015 IEEE Eric E. Sumner Award Committee ('15-'16)

PROFESSIONAL ACTIVITIES: (CONTINUED)

Member, Steering Committee,
Optoelectronics Communications Conference (OECC) ('14)

Member, Technical Program Committee,
22nd Wireless and Optical Communication Conference ('13)

Member, Technical Program Committee, Systems Subcommittee,
Photonics in Switching ('13, '14)

Member, External Advisory Committee,
Department of Electrical & Computer Eng., Johns Hopkins Univ. ('09-'21)

Member, International Advisory Committee,
International Conference on Fiber Optics and Photonics, Madras ('12)

Member, Technical Program Committee,
European Conference on Optical Communications (ECOC) ('12)

Member, Technical Program Committee, Globecom GC12,
Optical Networks & Systems Symposium (ONS) (2012)

Member, Technical Program Committee, Systems Subcommittee,
Photonics in Switching 2012

National Academy of Engineering Representative,
US Advisory Committee, International Commission on Optics ('10-'12,'13-'15)

Co-Chair, Technical Program Committee, SPIE Photonics West,
Conference on High Contrast Metastructures (OE131), San Francisco ('12)

General Co-Chair, OSA Topical Meeting on
Signal Processing in Photonic Communications (SPPCOM), Toronto (2011)

IEEE Photonics Society (Membership~7,000)
(Formerly the IEEE Lasers & Electro-Optics Society (LEOS))

President (2006-2007)
Past-President (2008-2009)
President-Elect (2004-2005)

Member, Strategic Planning Committee,
IEEE Technical Activities Board (2011-2013)

Member, Board of Editors, OSA ('08-'13)

Chair, Awards Committees, IEEE Photonic Society (2010)

PROFESSIONAL ACTIVITIES: (CONTINUED)

Member, Technical Program Committee, IEEE Photonics Society,
Summer Topical Meeting on Terabit Optical Ethernet, Montreal (2011)

Member, International Advisory Committee,
IQEC / CLEO Pacific Rim Conference, Sydney (2011)

Member, Technical Program Committee,
7th Workshop on Fibre Optics& Passive Components, July, Montreal (2011)

Member, International Advisory Committee,
1st International Postgraduate Student Conference (PGSC), Singapore (2011)

Member, Conference Program Committee, SPIE Photonics West,
Free-Space Laser Communication Technologies XXIII (2011)

Program Co-Chair, OSA Topical Meeting on
Signal Processing in Photonic Communications (SPPCOM), Germany (2010)

Symposium Co-Chair, European Conf. on Optical Communications (Italy) ('10)
C. Kao's Nobel Prize & Early Development of Optical Fibres and Optical Comm.

Member, Technical Program Committee,
European Conference on Optical Communications (ECOC) ('00, '11, '12)

Chair ('08) and Member ('10), Int'l Advisory Committee,
IEEE Photonics Global Singapore

General Co-Chair, IEEE Photonics in Switching Conference, Pisa, Italy (2009)

Member, Board of Visitors,
Army Research Office (ARO) Electronics Division ('10)

Member, Technical Program Committee,
OSA Topical Meeting on Photonics in Switching, Monterey, CA ('10)

Member, Technical Program Committee,
Optical Networks & Systems Symposium, IEEE Globecom, Miami ('10)

Member, International Advisory Committee (IAC),
BGPP'10 (Bragg Gratings, Photosensitivity, & Poling), Germany ('10)

Member, International Advisory Committee,
3rd Int'l Photonics & OptoElectronics Meetings (POEM), Wuhan ('10)

Co-Chair, Technical Subcommittee,

PROFESSIONAL ACTIVITIES: (CONTINUED)

Optical Transmission Systems, Switching and Subsystems,
IEEE/OSA/SPIE Asia Communications & Photonics Conf (ACP), Shanghai ('09)
Member, Conference Committee, IEEE/LEOS Summer Topical Meeting,
The Future Global Network, CA (2009)

Member, Conference Committee, IEEE/LEOS Summer Topical Meeting,
Optical Code Division Multiple Access (OCDMA), CA (2009)

Member, Publication Advisory Board,
OSA's Advances in Optics & Photonics (AOP) ('08-'09)

Member, Editorial Advisory Board, Lightwave Magazine, Pennwell Publishers

Member, Int'l Advisory Committee,
8th Int'l Conf. on Optical Communications & Networks (ICOCN), Beijing ('09)

Member**,** IEEE Photonics Soc. Distinguished Service Award Committee ('08,'09)

Member, Technical Program Committee, Globecom,
Optical Networks & Systems Symposium (ONSS), Hawaii (2009)

Member, Conference Program Committee, SPIE Photonics West,
Advanced Optical Concepts in Quantum Computing, Memory, & Comm. (2009)

Member, Conference Program Committee, SPIE Photonics West,
Free-Space Laser Communications, CA (2009)

Member, Tech. Prog. Comm., Symp. on Optical Fiber Devices & Applications,
Int'l Conf. on Materials for Advanced Technologies (ICMAT), Singapore (2009)

Member, OSA Review Committee of the J. of the Optical Society of Korea ('09)

Program Co-Chair, OSA Topical Meeting on
Coherent Optical Technologies and Applications (COTA) (2008)

Member, Technical Program Committee,
CS/IEICE Int'l Conference on Photonics in Switching, Sapporo, Japan (2008)

Member, Tech. Prog. Comm., ONS (Optical Networks & Systems Symposium),
IEEE Int'l Conference on Communications (ICC) (2008, 2009)

Member, Optical Network & Broadband Access Subcommittee,
Opto-Electronics and Communications Conference, Sydney (2008)

Chair, Ethics and Conflict Resolution Committee,

PROFESSIONAL ACTIVITIES: (CONTINUED)

IEEE Technical Activities Board (TAB) (2007)

Member, Strategic Planning Committee,
IEEE Technical Activities Board (2008-2010)

Member, New Initiatives Committee, IEEE-Wide Committee (2008)

General Co-Chair, OSA Topical Meeting on Slow & Fast Light (2007)

Member, Ethics and Member Conduct Committee Hearing Panel,
IEEE Institute-Wide (2006-2008)

Member**,** Frederic Ives Medal/Jarus Quinn Endowment Award Committee,
highest award of the Optical Society of America (OSA) ('06,'07)

Member, International Program Committee (IPC),
International Association of Science & Technology for Development (IASTED)
Int'l Conf. on Wireless and Optical Communications (WOC), Quebec 2008
Int'l Conf. on Communication, Internet & Info. Tech. (CIIT), Banff (2007)
Int'l Conf. on Power and Energy Systems, Thailand (2007)
Int'l Conf. on Wireless and Optical Communications, Montreal (2007)

Co-Organizer, Workshop on Slow Light,
Conference on Optical Fiber Communications 2007

Chair, Steering Committee, AOE Expo and Conference, Shanghai (2007)

Program Co-Chair, OSA Topical Meeting on Slow & Fast Light (2006)

Chair, Communications Subcommittee, OSA Topical Meeting
Coherent Optical Technologies and Applications (COTA) (2006)

Co-Chair, Science and Engineering Council (2001-2003),
Optical Society of America (OSA) (Total Membership~15,000)

Workshop Co-Chair, The Future of Optical Telecommunications,
European Conf. on Optical Communications (Cannes) ('06)

Chair, External Int'l Review Panel, Research Program in Network Technol.,
National ICT Australia (NICTA), University of Melbourne ('06-'07)

Member, Technical Program Committee, IEEE LEOS Summer Topical Meetings
Quantum Communications in Telecom Networks (2006)

Member**,** Board of Directors, NSERC Canada Research Center,

PROFESSIONAL ACTIVITIES: (CONTINUED)

Agile All-Photonics Networks (AAPN) ('05-'10)

Chair, Membership Committee,
IEEE Lasers & Electro-Optics Society (LEOS) ('04-'06)
Member, Technical Program Committee, Photonics in Switching,
OSA Topical Meeting, Greece (2006)

Member, International Program Committee, IASTED,
Int'l Conf. on Comm., Internet and Information Tech., St. Thomas, USVI ('06)

Chair, Distinguished Service Award Committee,
IEEE Lasers & Electro-Optics Society (LEOS) ('04,'05,'06)

Chair, Planning Committee, Science & Engineering Council,
Optical Society of America (OSA) ('04)

Member, Technical Program Committee, Optical Signal Processing,
IEEE LEOS Summer Topical Meetings (2005)

Member, Technical Program Committee,
Photonic Technologies for Communications, IEEEGlobecom, St. Louis (2005)

Member, Technical Prog. Committee, Optical Systems & Networks Symposium
IEEE International Communications Conference (ICC) 2006, Turkey

Member, International Steering Committee, Asia-Pacific Optical and Wireless
Communications Conference (APOC), Beijing, Shanghai, Korea ('04,'05,'06)

Member, International Advisory Committee,
Symp. on Technology Fusion of Optoelectronics and Communications (STFOC),
International Conference on Photonics ('05)

Steering Committee, Conf. on Optical Fiber Communications **(OFC)** (99-04)
Budget Subcommittee ('02-'03)
Long-Range Planning Committee ('03-'04)

Vice-President, Technical Affairs (1996-1999),
IEEE Lasers & Electro-Optics Society (LEOS) (Membership~7,500)
Responsible for all Technical Affairs, including Technical
Council, Standards Committees, & Gov't Liaison Committees

Conference on Lasers and Electro-Optics (CLEO)
(>1000 invited & contributed papers, >6000 attendees)

General Co-Chair (2003)

PROFESSIONAL ACTIVITIES: (CONTINUED)

Program Co-Chair (2001)
Member, Long Range Planning Subcomm., Steering Committee (‘03)
Co-Chair, Lasers and Electro-Optics Applications Program (2002)
Committee Chair, Lightwave Communications (2000)
Member, Program Committee ('97, '98, '99)

Member, **Board of Directors, OSA (2001-2003)**

Workshop Co-Chair, Ultra-High Capacity Optical Communications and Networking: Challenges in Broadband Optical Access, Materials Processing, and Manufacturing, **National Science Foundation (2002)**

Chair, Distinguished Traveling Lecturer Awards Committee**,** IEEE LEOS **('02)**

Member**,** Curriculum Committee**,** NSF-Funded Advanced Technology Education (ATE) Planning Grant for the California Optical and Photonics Technology Education Center (Cal-OPTEC) at San Jose City College **('03-'04)**

Member, Technical Program Committee, Optical Interconnects,
IEEE LEOS Summer Topical Meeting '04

Member, Technical Program Committee, IASTED,
Int’l Conf. on Optical Communication Systems & Networks, Banff, Canada (04)

Member, **Technical Program Committee**, Photonics In Switching, Paris ('03)

Member, International Advisory Committee, Asia-Pacific Optical and Wireless Communications Conference (APOC), Wuhan, China ('03)

Member, **Advisory Board**, Photonics Technology Access Program (PTAP), Optoelectronics Industry Development Association

Member, **Public Policy Committee**, OSA ('03)

Member, **Publications Council**, Liason to Science & Eng. Council, OSA ('03)

Member, **Board of Editors**, OSA ('01-'6)

Member, **Finance Committee**, OSA ('02-'04)

Member, **Nominating Committee for President and Directors**, OSA ('00)
Elected Member of the Board of Governors, IEEE LEOS ('98-'01)
Member, Technical Program Committee, IASTED,
Int’l Conf. on Comm., Internet & Information Technology, Scottsdale, AZ (‘03)

Member, **Technical Program Committees**,

PROFESSIONAL ACTIVITIES: (CONTINUED)

IEEE LEOS Summer Topical Meetings '02:

(1) Fast Optical Signal Processing in Optical Transmission Committee
(2) Dynamic Enablers of Next-Gen Optical Comm. Systems Committee

Steering Committee Member,
IEEE Workshop on Fiber & Optical Passive Components, Sept., Italy (02,04,05)

Member, Technical Program Committee, IASTED,
Wireless & Optical Comm. Conference, Banff, Canada (2002)

IEEE Lasers and Electro-Optics Society (LEOS) Annual Meeting
(570 invited & contributed papers, ~ 800 attendees)

General Chair (1999)
Program Chair (1997)

Program Co-Chair, OSA Annual Meeting 2001

OSA Topical Meeting on Optical Amplifiers and Their Applications

General Co-Chair (1999)
Technical Co-Chair (1998)
Chair, Systems Applications (1997)
Program Committee Member (1996)

Chair, Photonics Division, Technical Council,
Optical Society of America ('98-'00)

Workshop Co-Chair, The Future Revolution in Optical Communications & Networks, **National Science Foundation** (2000)

Member, Technical Program Committee, IEEE Microwave Photonics Conf. ('01)

Member, Optoelectronics Task Force, Semiconductor Research Corp. ('01)
Member, Technical Program Committee, CLEO Pacific Rim ('01)

Member, Technical Program Committee,
Optoelectronics Communications Conference (OECC), Sydney ('01)

Member, Technical Program Committee, Optical Networking Subcommittee,
Asia-Pacific Optical and Wireless Communications Conference (APOC)
(1) Beijing ('01)
(2) Shanghai ('02)

Member, Technical Program Committee, SPIE, Photonics West,

PROFESSIONAL ACTIVITIES: (CONTINUED)

WDM and Photonic Switching Devices for Network Applications, San Jose ('01)

Member, Technical Program Committee,
International Conference on Fiber Optics and Photonics, Calcutta ('01)

Chair, Standing Tech. Committee**,**
Optical Networks, **IEEE LEOS (1996-1999)**

Co-Chair, IEEE LEOS Summer Topical Meeting '98,
Broadband Optical Networks: An Emerging Reality

Member, **Scientific Advisory Board,** U.S./Japan Joint Optoelectronics
Project, **Optoelectronics Industrial Development Association**

Workshop Co-Organizer, Conference on Optical Fiber Communications
(1) Passive Optical Devices ('98)
(2) Systems Software Modeling ('98,'99,'00,'01)

Member, US Advisory Committee**,**
International Commission on Optics ('97-'02)

Member, IEEE Tech. Activities Board Subcommittee on
New Technology Directions '96, '97

Conference Program Committee, **SPIE**, Optical Comm., Taiwan ('98)

General Co-Chair, IEEE LEOS Summer Topical Meeting '97, Technologies for the Global Information Infrastructure

Invited Workshop Participant, Frontiers in Engineering,
National Academy of Engineering (nominations of engineers <40 years old)

Chair, Optical Communications Technical Committee**, IEEE LEOS** ('94-'96)

Vice-Chair, Optical Communications Group, Technical Council,
Optical Society of America (OSA) ('93-'97)

Conference General Co-Chair, IEEE LEOS Summer Topical
Meeting '95, Technologies for the Global Information Infrastructure

Program Committee, System Technologies,
Conference on Optical Fiber Communications (OFC) ('96-'98)

Program Committee, IEEE LEOS Summer Topical Meeting ('96),
Broadband Optical Networks and Their Enabling Technologies

PROFESSIONAL ACTIVITIES: (CONTINUED)

Chair, Optical Communications Committee,
LEOS Annual Meeting ('94-'96)

StandingTechnical Committee,
IEEE LEOS, Optical Networks ('93-'96)
Program Chair, Telecommunications Engineering, Society of Photo-Instrumentation Engineers **(SPIE)**, Photonics West ('95)

Chair, Conf. on Emerging Technologies for All-Optical Networks,
SPIE ('95-'96)

Chair, Information & Comm., NSF Forum on Optical Science & Eng. ('95)

Chair, Symposium, System Modeling, Conf. on Integrated Photonics Res. '96

Technical Program Committee, Committee on Numerical Modeling, IPR '96

Awards Committee Member,
IEEE LEOS Fellows Selection Committee ('00)

Awards Committee Member,
IEEE LEOS Distinguished Traveling Lecturer Award ('01, '03, '04)

Awards Committee Member,
IEEE LEOS Wm. Streifer Scientific Achievement ('96, '03, '04, '05)

Awards Committee Member, IEEE LEOS Quantum Electronics Award ('97)

Technical Committee, IEEE Interconnects Workshop ('96)

Chair, Panel on Optical Information and Communications, Workshop on Optical Science and Engineering, National Science Foundation ('94)

Technical Program Committee, Symposium Organizer,
Optical Society of America Annual Meeting:
'98 (WDM Systems)
'96 (Optical Networks)
'95 (Wavelength Conversion Techn.)
'92 (EDFA Appl.: Distribution)

Conf. Program Committee, **SPIE**,
Components for WDM ('95,'99,'00,'01,'02)

Program Committee, IEEE/ACM/SPIE Workshop on Optical Networks, ('00)

Standing Technical Committee, IEEE LEOS, Optical Comm. ('92-'94)

PROFESSIONAL ACTIVITIES: (CONTINUED)

Program Committee, IEEE LEOS Ann. Meeting '92,'93; Lightwave Comm.

Review Panel Member, NSF, Optical Communications ('92,'93,'94,'95,'97,'98,'03)

TEACHING:

STUDENT EVALUATIONS

I. Univ. of Southern California (5.0 is highest possible score)

Average student evaluations for all USC courses since 1992: 4.94/5.0

Undergraduate Course: Introduction to Communications (EE 467)

1. Spring '25: **4.89/5.0**, 10 students, 9 had evaluated
2. Spring '24: **5.0/5.0**, 8 students, 7 had evaluated
3. Spring '23: **5.0/5.0**, 8 students, 8 had evaluated
4. Spring '22: **5.0/5.0**, 11 students, 11 had evaluated
5. Spring '21: **4.70/5.0**, 11 students, 10 had evaluated
6. Spring '20: **4.95/5.0**, 29 students, 21 had evaluated
7. Spring '19: **4.83/5.0,** 21 students, 18 had evaluated
8. Spring '18: **5.0/5.0,** 27 students, 16 had evaluated
9. Spring '17: **4.91/5.0,** 15 students, 11 had evaluated
10. Spring '16: **4.96/5.0,** 27 students, 27 had evaluated
11. Spring '15: **4.96/5.0,** 27 students, 24 had evaluated
12. Spring '14: **4.84/5.0,** 25 students, 19 had evaluated
13. Spring '13: **5.0/5.0,** 21 students, all had evaluated
14. Spring '12: **4.94/5.0,** 20 students, 18 had evaluated
15. Spring '11: **5.0/5.0,** 22 students, 18 had evaluated
16. Spring '10: **5.0/5.0,** 19 students, 16 had evaluated
17. Spring '09: **5.0/5.0,** 10 students, all had evaluated
18. Fall '07: **5.0/5.0,** 11 students, all had evaluated
19. Fall '06: **5.0/5.0,** 10 students, 9 had evaluated
20. Fall '04: **5.0/5.0,** 11 students, all had evaluated
21. Fall '03: **5.0/5.0,** 7 students, all had evaluated
22. Fall '02: **5.0/5.0,** 11 students, all had evaluated
23. Fall '01: **5.0/5.0,** 21 students, all had evaluated
24. Fall '00: **5.0/5.0,** 20 students, all had evaluated
25. Fall '99: **5.0/5.0,** 22 students, 21 had evaluated
26. Fall '98: **5.0/5.0,** 18 students, all had evaluated
27. Fall '97: **5.0/5.0,** 22 students, all had evaluated
28. Fall '96: **4.92/5.0,** 14 students, all had evaluated
29. Fall '95: **5.0/5.0,** 8 students, all had evaluated
30. Fall '94: **5.0/5.0,** 9 students, all had evaluated
31. Fall '93: **5.0/5.0,** 8 students, all had evaluated
32. Fall '92: **5.0/5.0,** 13 students, all had evaluated

Graduate Course: Optical Fiber Communications Systems (EE 558)

1. Fall '19: **4.95/5.0**, 20 students, 19 had evaluated

2. Fall '18: **4.91/5.0,** 25 students, 23 had evaluated
3. Fall '17: **4.95/5.0,** 24 students, 22 had evaluated
4. Fall '16: **4.94/5.0,** 22 students, 17 had evaluated
5. Fall '15: **5.0/5.0,** 24 students, 19 had evaluated
6. Fall '14: **4.95/5.0,** 29 students, 22 had evaluated
7. Fall '13: **5.0/5.0,** 26 students, 24 had evaluated
8. Fall '11: **4.88/5.0,** 29 students, 24 had evaluated
9. Fall '10: **4.96/5.0,** 35 students, 28 had evaluated
10. Fall '09: **4.97/5.0,** 31 students, 30 had evaluated
11. Fall '08: **4.94/5.0,** 33 students, all had evaluated
12. Spring '08: **4.88/5.0,** 28 students, 25 had evaluated
13. Spring '07: **4.92/5.0,** 29 students, 24 had evaluated
14. Spring '06: **5.0/5.0,** 20 students, 17 had evaluated
15. Spring '05: **4.97/5.0,** 31 students, 29 had evaluated
16. Spring '04: **4.91/5.0,** 24 students, 23 had evaluated
17. Spring '03: **4.88/5.0,** 26 students, 25 had evaluated
18. Spring '02: **4.73/5.0,** 30 students, all had evaluated
19. Spring '01: **5.0/5.0,** 25 students, 24 had evaluated
20. Spring '00: **4.95/5.0,** 22 students, all had evaluated
21. Spring '99: **5.0/5.0,** 17 students, all had evaluated
22. Spring '97: **4.79/5.0,** 23 students, all had evaluated
23. Spring '96: **4.93/5.0,** 29 students, all had evaluated
24. Spring '95: **4.97/5.0,** 31 students, all had evaluated
25. Spring '94: **4.93/5.0,** 28 students, 27 had evaluated
26. Spring '93: **4.93/5.0,** 40 students, all had evaluated
27. Spring '92: **4.72/5.0,** 19 students, all had evaluated

II. Columbia Univ. (while a graduate student) (10.0 is highest possible score)

Undergraduate Course: Fundamentals of Circuits and Systems

1. Fall '87: **8.3/10.0**, 110 students, 93 had evaluated

Ph.D. THESES ADVISED AND GRANTED:

1. Syang-Myau Hwang, 10/95, "System Performance and Channel Equalization of Optically-Amplified WDM Long-Distance Links and Ring Networks"
2. Andrew David Norte, 1/96, "Experimental Demonstrations of Wavelength Routing Functions for an All-Optical Wavelength-Division-Multiplexed Fiber Optic Communication Network Switching Node"
3. William Shieh, 3/96, "Experimental and Theoretical Study of All-Optical Wavelength Shifting Techniques by using Semiconductor Optical Amplifiers"
4. Eugene Park, 3/96, "Applications of All-Optical Wavelength Shifting using Semiconductor Optical Amplifiers for Switching and Routing Functions in a Dynamically Reconfigurable Wavelength-Division-Multiplexed Fiber-Optical Communication Network"
5. James E. Leight, 8/96, "System and Network Implementations of 2-D Multiple-Plane Wavelength-Division-Multiplexed Optical Interconnects"
6. J.-C. Wu, 8/96, "Protocols and Design Tradeoffs for Packet-Switched WDM Networks with Large Tuning Latencies"
7. M. Imran Hayee, 12/98, "Modeling of Dispersion and Nonlinearities in High-Performance Transmission"
8. Jin-Xing Cai, 6/99, "Experimental Demonstrations of Techniques to Improve System Performance in Non-Static Optical Wavelength Division Multiplexing Systems and Networks"
9. Kai-Ming Feng, 6/99, "System Performance Improvement in Optical Wavelength Division Multiplexing Systems and Networks using Optical Gratings"
10. Jong-Jin Yoo, 12/99, "System Performance and Network Structure of Two-Dimensional Multiple-Plane WDM Optical Interconnects"
11. Steve A. Havstad, 9/00, "Generation, Filtering, and Applications of Subcarriers in Optical Communication Systems"
12. Sanggeon Lee, 9/00, "Characterization and Compensation of Polarization Mode Dispersion and Chromatic Dispersion Slope Mismatch for High Bit-Rate Data Transmission"
13. Reza Khosravani, 10/00, "Reduction of Signal Degrading Effects in Wavelength Division Multiplexed Systems and Networks"
14. Mustafa C. Cardakli, 1/01, "Optical Techniques to Implement Networking Functions in Dynamically Reconfigurable Wavelength-Division-Multiplexed Fiber-Optic Communication Networks"
15. Olaf H. Adamczyk, 2/01, "Experimental Demonsstration of Techniques to Improve System Performance in Fiber-Optic Communication Systems using Subcarrier-Multiplexed and Digital Baseband Signals"
16. Zhongqi Pan, 11/02, "Overcoming Fiber Dispersive Effects in High-Speed Reconfigurable Multi-Wavelength Optical Systems and Networks"
17. Asaf B. Sahin, 4/03, "Experimental Demonstration of Techniques to Improve System Performance in Non-Static Microwave Frequency Analog and Digital Signal Transmission over Fiber-Optic Communication Systems"

Ph.D. THESES ADVISED AND GRANTED: (CONTINUED)

18. Deniz Gurkan, 5/03, "Experimental Demonstrations of Optical Networking Functions forWavelength-Division-Multiplexed (WDM) Optical Networks"
19. Yong-Won Song, 10/03, "Mitigation of Signal Degradations in Reconfigurable Wavelength-Division-Multiplexed Fiber-Optic Communication Systems"
20. S.M. Reza Motaghian Nezam, 4/04, "Chromatic and Polarization Mode Dispersion Monitoring for Equalization in Fiber-Optic Communication Systems"
21. Paniz Ebrahimi, 5/04, "Design and Implementation of Novel Optical Subsystems for Enhancing Spectral Efficiency, Security, and Performance of High-Speed Wavelength Division Multiplexed and Optical Code-Division-Multiple-Access Systems"
22. Lian-Shan Yan, 11/04, "Investigation of Degrading Effects and Performance Optimization in Long-Haul WDM Transmission Systems and Reconfigurable Networks "
23. John E. McGeehan, 5/05, "Experimental Demonstration of Optical Router and Signal Processing Functions in Dynamically Reconfigurable Wavelength-Division-Multiplexed Fiber Optic Networks"
24. Changyuan Yu, 8/05, "Dispersive and Nonlinear Effects in High-Speed Reconfigurable WDM Optical Fiber Communication Systems"
25. Yan Wang, 12/05, "Monitoring and Utilization of Dispersive and Nonlinear Effects in High-Speed Reconfigurable WDM Optical Fiber Networks"
26. Ting Luo, 2/06, "Management of Dispersion, Nonlinearity and Polarization-Dependent Effects in High-Speed Reconfigurable WDM Fiber Optic Communication Systems"
27. Saurabh Kumar, 11/06, "Optical Signal Processing For High-Speed, Reconfigurable Fiber Optic Networks"
28. Poorya Saghari, 11/06, "Techniques for Increasing the Number of Users in Dynamically Reconfigurable Optical Code Division Multiple Access Systems and Networks"
29. Louis C. Christen, 9/08, "Detection and Optical Signal Processing using Phase Based Optical Modulation Formats"
30. Bo Zhang, 12/08, "Nonlinear Optical Signal Processing For High-Speed, Spectrally Efficient Fiber Optic Systems and Networks"
31. Lin Zhang, 11/10,"Silicon Integrated Devices for Optical System Applications"
32. Scott R. Nuccio, 12/10, "Applications of All Optical Signal Processing for Advanced Optical Modulation Formats"
33. Irfan Fazal, 7/11, "Optical Signal Processing for Enabling High-Speed, Highly Spectrally Efficient and High Capacity Optical Systems"
34. Jeng-Yuan Yang, 9/11, "Optical Performance Monitoring and Signal Processing to Enable Robust and Reconfigurable Optical Networks"
35. Xiaoxia Wu, 10/11, "High-Speed Optical Signal Processing and Performance Monitoring Towards Tbit/s Optical Networks"

Ph.D. THESES ADVISED AND GRANTED: (CONTINUED)

37. Omer Yilmaz, 12/11, "Advanced Nonlinear Optical Signal Processing Techniques For High Speed, ReconfigurableOptical Fiber Networks"
38. Yang Yue, 10/12, "Integrated Silicon Waveguides and Specialty Optical Fibers for Optical Communications System Applications"
39. Salman Khaleghi, 6/13, "High-Speed and Reconfigurable All-Optical Signal Processing for Phase and Amplitude Modulated Signals"
40. Reza Chitgarha, 6/14, "Reconfigurable High-Speed Optical Signal Processing and High-Capacity Optical Transmitter"
41. Hao Huang, 11/14, "Multiplexing Techniques and Reconfigurable Networking Functions for Optical Communications using OAM Beams"
42. Asher Voskoboinik, 12/14, "Sweep-Free Brillouin Optical Time-Domain Analyzer"
43. Nisar Ahmed, 1/16, "Orbital Angular Momentum based Spatially Multiplexed Optical and Millimeter-wave Communications"
44. Yan Yan, 4/16, "High Capacity Optical and RF/mm-wave Communications Utilizing Orbital Angular Momentum Multiplexing"
45. Yongxiong Ren, 11/16, "Orbital Angular Momentum-Based Space Division Multiplexing for High-Capacity Optical and Millimeter-Wave Communications"
46. Morteza Ziyadi, 01/17, "Reconfigurable High-Speed Optical Signal Processing Using Optical Frequency Comb for High-Capacity, Spectrally Efficient Fiber Optic Systems and Networks"
47. Guodong Xie, 12/17, "Using Waves Carrying Orbital Angular Momentum for Communications and Remote Sensing"
48. Changjing Bao, 12/17, "On-Chip Kerr Frequency Comb Generation and Its Effects on the Application of Optical Communications"
49. Ahmed Almaiman, 4/18, "Optical Wave Mixing for Tunable Delays and High-Speed Signal Processing"
50. Amirhossein Mohajerin Ariaei, 5/18, "Reconfigurable High-Speed Processing and Noise Mitigation of Optical Data"
51. Long Li, 02/19, "Applications of Orbital Angular Momentum in High-Capacity Free-Space Optical Communications"
52. Yinwen Cao, 04/19, “Reconfigurable Optical Signal Processing for Efficient Spectrum Utilization in High-speed Optical Communication Systems”
53. Peicheng Liao, 11/19, “Microresonator-based Kerr Frequency Comb for Optical Communications and Signal Processing”
54. Zhe Zhao, 07/20, “Optical and mm-wave Orbital-angular-momentum Beam Generation and its Applications in Communications”
55. Cong Liu, 03/21, “Applications in Optical Communications: Quantum Communication Systems and Optical Nonlinear Devices”

Ph.D. THESES ADVISED AND GRANTED: (CONTINUED)

56. Ahmad Fallahpour, 03/21, "Reconfigurable High-Speed Optical Signal Processing for Optical Communication and Modulation Format Manipulation"
57. Fatemeh Alishahi, 09/21, "Reconfigurable and Flexible High-Speed Optical Signal Processing and Spectrally Shared Optical Subsystems"
58. Kai Pang, 03/22, "Spatial Modes for Optical Communications and Spatiotemporal Beams"
59. Runzhou Zhang, 04/22, "High-Capacity Optical Communications Using Structured Light in Random and Disturbed Media"
60. Haoqian Song, 04/22, "Using Spatial Modes for Data Transmission Through the Air and Through the Air-Water Interface"
61. Hao Song, 02/23 "Optical Communications, Optical Ranging, and Optical Signal Processing using Tunable and Reconfigurable Technologies"
62. Kaiheng Zhou, 04/23, "Optical Communication Systems and Space-Time Wave Packet Generation using Frequency Combs and Spatial Modes"
63. Huibin Zhou, 02/24, "Free-Space Optical Communications and Probing through Turbulence Links Using Structured Light"
64. Amir Minoofar, 03/25, "High-Capacity Sub-THz Wireless Communications Using LG Modes and Optical Signal Processing Using Wave Mixing"
65. Xinzhou Su, 05/25, "Manipulation of Light Degrees of Freedom for Applications in Communications and Spatiotemporal Phenomena"

GRANTS:

National Science Foundation (NSF) Young Investigator Award (9/92-8/94), **PI,**
"Optical Fiber Communication Systems"

Advanced Research Projects Agency (ARPA) (8/93-7/96)**, Co-PI,** "Two-Dimensional WDM Interconnects for Highly Parallel and Dense High-Speed Optical Processing", with C.J. Chang-Hasnain (Stanford Univ.)

Charles Lee Powell Foundation USC New Investigator Award (1/92-6/94), **PI**,
"WDM Amplified Optical Networks"

ILX Lightwave Corp. (10/92)**, University Donations Program Award, PI,**
"WDM Systems Research using Wavelength-Tunable Lasers"

National Science Foundation (NSF) (9/93-8/96)**, Co-PI,** "Wavelength Converting and Wavelength Routing for High-Efficiency Almost-All-Optical Networks," with V.O.K. Li and P.D. Dapkus (USC)

(Proposal ranked #1 out of 70 letters-of-intent and 33 final proposals)

David and Lucile Packard Foundation (10/93-9/99), **PI**, "Fellowship in Science and Engineering: WDM Optical Communications"

Advanced Research Projects Agency (ARPA) (8/94-7/96)**, Co-PI,** "Optically-Amplified Scalable WDM Networks using Acousto-Optic Filters for Amplifier Gain Equalization and Signal Routing," with D.A. Smith (Case Western Reserve) and Kathryn D. Li (New Focus)

National Science Foundation, Presidential Faculty Fellows Award (9/94-8/97), **PI**,
"High-Capacity WDM Optical Communication Systems"

ILX Lightwave Corp. (4/95)**, University Donations Award, PI,** "WDM Systems using Multi-λ VCSELs"

Ballistic Missile Defense Org., Focused Research Initiative (5/95-5/98),
"Multiscale Photonic Data Fusion Networks and Their Interfaces," **Senior Investigator** (PI - A.A. Sawchuk)

Optoelectronics Industry Development Assoc. / Joint Optoelectronics Project (**OIDA/JOP**) (2/96), **PI**,
"Ultra-High-Capacity WDM Switching Systems"

Defense Univ. Research Instrumentation Program (**DURIP / ARPA**) (5/96)**, Co-PI,** "Transparent High-Speed Optically-Amplified Multiple-Wavelengths Networks using AOTFs for Add/Drop Multiplexing and Gain Equalization", with D.A. Smith (Case Western Reserve Univ.)

National Science Foundation (NSF) 7/96-6/06, "Multiwavelength Switching in High-Capacity Media Systems," Engineering Research Center in Integrated Media Systems, **Key Investigator** (PI - C.L. Nikias)

Defense Advanced Research Projects Agency (DARPA) (9/96-8/99)**, Co-PI,** "Novel WDM Device and System Research for Ultra High Capacity Optical Interconnects", with C.J. Chang-Hasnain (UC Berkeley)

National Science Foundation (NSF) 8/96-7/97, **Co-PI**, Instrumentation Grant,
"Wired and Wireless High-Speed Networks," with R.A. Scholtz and J. Choma (USC)

National Science Foundation (NSF) 7/96-6/97, **Co-PI**, with L.A. McAdams (Optivision, Inc.), Small Business Technology Transfer (STTR) Program, "Novel Wavelength Shifting Structures for Optical Networks,"

GRANTS: (CONTINUED)

Joint Services Electronics Program (JSEP) (4/97-3/00), **Senior Investigator** (PI - W. Steier, USC), "Ultra-High-Speed Wavelength and Time Switching for Bursty Communications"

Defense Advanced Research Projects Agency (DARPA) (9/97-8/00), **Senior Investigator** (PI - S.R.J. Brueck, Univ. of New Mexico),"Optoelectronic Materials Center for Manufacturable, Multi-dimentional High Capacity Optoelectronic Interconnects"

Defense Univ. Research Initiative Program (**DURIP/ DARPA**) (5/98-4/99)**, Co-PI, "**2D VCSEL Arrays for Optical Imaging, Interconnects, and Signal Processing," with C. Chang-Hasnain (UC Berkeley)

Defense Advanced Research Projects Agency (DARPA) (6/98-5/01)**, PI,** "Using a Recirculating Fiber Loop to Determine the Limitations Placed on Ultra-High-Performance Soliton and Linear Optical Systems by Polarization Mode Dispersion," Next Generation Internet

National Science Foundation (NSF) (9/98-8/01), **Co-PI**, "Rapidly-Tunable Integrated Vertical Cavity Filters and Attenuators For Dynamically Reconfigurable Packet-Switched WDM Optical Networks," with C. Chang-Hasnain (UC Berkeley)

Optoelectronics Industry Development Assoc. / Joint Optoelectronics Project (**OIDA/JOP**) (2/98), **PI**, "Ultra-High-Capacity WDM Networks"

Charles Lee Powell Foundation (7/98-6/01), **PI**,"Photonics Backbone for Wireless Communications"

ILX Lightwave Corp. (6/00)**, University Donations Program Award, PI,**
"WDM Systems Research for the Next Generation Internet"

Defense Advanced Research Projects Agency (DARPA) (7/00-6/04), **Senior Investigator** (PI - S.R.J. Brueck, Univ. of New Mexico),"Optoelectronic Materials Center for High Capacity Optoelectronic Interconnects"

Department of Defense (6/99-5/01), **PI,** "Compensation of Channel-Degrading Effects in Reconfigurable WDM Systems"

Hitachi Corporation (10/99-6/01), **PI,** "Compensation of Polarization Mode Dispersion"

Phaethon Communications (10/00-11/02), **PI,** "Studies of Optical-Fiber-Induced Dispersion Effects"

Defense Advanced Research Projects Agency (DARPA) (6/00-5/03)**, PI,** "Tunable Compensation of Chromatic- and Polarization-Dispersion Effects for Enabling Significantly Higher Performance in the BOSSNET and NTON SUPERNET Testbeds," Next Generation Internet Program

The Okawa Foundation (10/00-9/01), **PI**, "Ultra-High-Capacity Multi-Wavelength Optical Systems"

Intel Corporation (12/01-11/02), **PI**, "New Technologies for Internet Routing in All-Optical Networks "

National Science Foundation (NSF) (10/00-9/03), **PI**, "Novel Dispersion-Division-Multiplexing Technique for Enabling Double the Spectral Efficiency in Transmission & Routing of Photonic & Microwave Networks"

National Science Foundation (NSF) (10/00-9/03), **Co-PI**, "Vertically-Integrated Primitives for a Bufferless All-Optical Packet-Switched Network," with C. Chang-Hasnain and V. Anantharam (UC Berkeley)

GRANTS: (CONTINUED)

Defense Advanced Research Projects Agency (DARPA) (6/00-5/03)**, Co-PI,** "Programmable Miniaturized Devices for CDMA WDM Systems," Chip-Scale WDM Program (PI - D.A.B. Miller, Stanford University)

Defense Advanced Research Projects Agency (DARPA) (6/00-5/03)**, Co-PI,** "Microresonator and Photonic Crystal Filters, Lasers and Modulators for Analog and Digital Chip Scale WDM Systems," Chip-Scale WDM Program, (PI - P.D. Dapkus and J. O'Brien, USC)

JDS Uniphase Corporation (3/02), **PI**, "Equipment Donation for the Optical Communications Lab at USC"

Cisco Systems (9/03-8/04), **PI**, "Mitigation of Fiber Nonlinear Effects in PMD-Limited WDM Systems"

Virtual Photonics Inc. (5/03), **PI**, "Software Donation for the Optical Communications Lab at USC"

Defense Advanced Research Projects Agency (DARPA) (12/02-11/06)**, PI,** "Secure Communications Over LANs using O-CDMA," OCDMA Program

Intel Corporation (1/03-12/04), **PI**, "Optical Buffers for Enhancing Optical Burst Switching"

Cisco Systems (9/04-8/05), **PI**, "Analysis of the Transmission Limitations of Directly Modulated Digital Signals in Metropolitan Optical Communication Systems"

Missile Defense Agency (10/03-9/04), **Co-PI**, "Measurements of Thin-Film Waveguides" (PI – Boyd Hunter, TPL, Inc.)

National Science Foundation (NSF) (9/03-8/06), **PI**, "High-Capacity Optical Communication Networks: Device and Systems Research using Photonic Crystal Structures that Enable Highly-Advanced Classical and Quantum Optical Networking," with A. Scherer (Caltech)

Defense Advanced Research Projects Agency (DARPA) (7/04-6/08), **Senior Investigator** (PI - S.R.J. Brueck, Univ. of New Mexico),"Optoelectronic Materials Center for Spatial, Temporal and Spectral Localization for Advanced Photonic Capabilities," University Photonics Research Program

Defense Advanced Research Projects Agency (DARPA) (4/04-10/05)**, PI,** "DOD-N Network Performance Based on Specific Physical DOD-N Technology Parameters: Connecting Multiple Core Routers,"DOD-N Program

Defense Advanced Research Projects Agency (DARPA) (7/04-9/08), **Co-PI** (PI – R.W. Boyd, Univ. of Rochester),"Applications of Slow Light in Optical Fibers," Slow Light Program

Intel Corporation (5/05-12/05), **PI**, "Measurements of Silicon-Based Photonic Filters"

Cisco Systems (9/05-8/06), **PI**, "Systems Measurements and Demonstrations of Cost-Effective Reach Extension and Monitoring using Intel-Fabricated Silicon-Based Waveguide Grating Filters"

National Science Foundation (NSF) (9/05-8/09), **Senior Investigator**, "NIRT: Integrated Nanophotonics for Quantum Computation and Quantum Information Processing" (PI – J.D. O'Brien, USC)

Hewlett Packard Corporation (10/05-1/06), **PI**, "Optical Interconnections"

Intel Corporation (1/06-12/06), **PI**, "Link Studies of Silicon Photonic Devices"

GRANTS: (CONTINUED)

National Science Foundation (NSF) (9/06-8/09), **Co-PI**, "A Hybrid Integrated Bidirectional Transparent RF-Optical Interface for Heterogeneous Data Traffic" (PI – H. Hashemi, USC)

Defense Advanced Research Projects Agency (DARPA) (10/06-7/07), **Co-PI** (PI – R. Beausoleil, Hewlett Packard),"Applications of Nanophotonics to Information Technology," Intra-Chip Communications Program (ARL)

Defense Advanced Research Projects Agency (DARPA) (7/07-6/08), **PI**,"Cisco: Variable-Bit-Rate and Multiple-Modulation Format DQPSK/ASK Receivers," Industrial Matching Program for theUniversity Photonics Research Program

Cisco Systems (7/07-6/08), **PI**, "Techniques for Enhancing WDM Transmission Performance when using Advanced Modulation Formats at 40 Gb/s and Beyond"

Defense Advanced Research Projects Agency (DARPA) (7/07-6/08), **PI**,"Intel: Phase and Amplitude Response of Silicon Modulators for Optical Systems," Industrial Matching Program for theUniversity Photonics Research Program

Intel Corporation, (7/07-6/08), **PI**, "Phase and Amplitude Response of Silicon Modulators for Optical Systems"

Optoelectronics Industry Development Association (OIDA), (11/07-3/08), **PI**, "High-Speed Optical Modulators," Photonics Technology Access Program **(PTAP)**

National Institute of Standards and Technology (NIST), (10/07-9/08), **PI**, " Optical Performance Monitoring to Enable Robust and Reconfigurable Optical Networks," Research Grants Program

Defense Advanced Research Projects Agency (DARPA) (1/08-12/10), **Co-PI** (PI – Ann C. Von Lehman, Telcordia),"Dynamic Resilient Terabit IP/Optical Networks," CORONET Program

Defense Advanced Research Projects Agency (DARPA) (1/08-6/12)**, PI,** "Enhanced Performance & Functionality of Continuously-Tunable Optical Delays," POPS Program

Hewlett Packard Corporation (5/08-9/08), **PI**, "Micro-ring Resonators for Optical Interconnections"

Defense Security Cooperation Agency (DSCA) (8/09-7/11), **PI**, "Enabling Higher-Performance Nonlinearity-Based Optical Sensors: Advances in Sensitivity and Dynamic Behavior "

Defense Univ. Research Instrumentation Program / Air Force Office of Scientific Research (**DURIP/AFOSR**) (6/08-5/09)**, PI, "**A 100-Gbit/s Base Multiplexer for Generation and Transmission of 400-Gbit/s Optical Polarization-Multiplexed Differential Quadrature Phase-Shift-Keying Signals**"**

Defense Advanced Research Projects Agency (DARPA) (6/08-5/09)**, PI,** "Exploring Signal Distortion in an Ultra-Low-Loss Waveguide," iPhOD Program

Defense Advanced Research Projects Agency (DARPA) (9/08-8/09), **Co-PI** (PI – A.L. Gaeta, Cornell Univ.),"Large Tunable Delays in Fiber and On-Chip via Conversion/Dispersion," Slow Light Program

Hewlett Packard Corporation (8/08-7/09), **PI**, "Signal Processing in On-Chip Optical DWDM Networks,"HP Labs Innovation Research Program (IRP)

GRANTS: (CONTINUED)

Defense Advanced Research Projects Agency (DARPA) (11/08-10/09)**, Co-PI** (PI – Ann C. Von Lehman, Telcordia),"Data in the Optical Domain Networks (DOD-N) Enabling Technology Transition," DOD-N Program

National Science Foundation (NSF) 9/08-8/13, "Center for Integrated Access Networks (CIAN)," Engineering Research Center, **Thrust Leader** (PI - Nasser Peyghambarian, Univ. of Arizona)

Hewlett Packard Corporation (8/09-7/10), **PI**, "Signal Processing in On-Chip Optical DWDM Networks II,"HP Labs Innovation Research Program (IRP)

Defense Advanced Research Projects Agency (DARPA) (11/09-5/14)**, Co-PI,** "Ultra-low Loss, Chip-Based Hollow-Core Waveguide usingHigh-Contrast Grating," integrated Photonic Delay (iPhoD)Program (PI: C.J. Chang Hasnain, UC Berkeley)

Gigoptix Corp. (11/09-10/10), **PI**, "High-Speed Modulation in Optical Communication Systems"

Hewlett Packard Corporation (8/10-7/11), **PI**, "Signal Processing in On-Chip Optical DWDM Networks III,"HP Labs Innovation Research Program (IRP)

Defense Advanced Research Projects Agency (DARPA) (6/10-4/11)**, PI,** "Optical Tapped-Delay-Line High-Speed Signal Processing," MTO Study

Cisco Systems (10/09-9/10), **PI**, "Novel Techniques to Enhance the Capacity Planning and Resource Management Efficiency of High-Capacity Optical Networks," Univ. Research Program

Defense Advanced Research Projects Agency (DARPA) (9/10-8/13)**, Co-PI,** "The Ultimate Capacity-Achieving Receiver for Classical Optical Communications," Information on a Photon (InPho)Program (PI: S. Dolinar, JPL)

National Science Foundation (NSF) (11/11-10/16), **Co-PI**, Major Instrumentation Grant (MRI), "Development of Measurement and Testing Equipment for Distributed Wireless Communications," with A. Molisch (PI, USC).

Defense Univ. Research Initiative Program (**DURIP/ONR**) (12/11-11/12)**, Co-PI, "**Ultra-wideband MIMO Channel Sounder for Distributed Electronic Warfare Applications and Localization Systems,**"** with A. Molisch (PI, USC)

Cisco Systems (10/11-9/12), **PI**, "Flexible, Reconfigurable Capacity Output of High-Performance Optical Transceivers Enabling Cost-Efficient, Scalable Network Architectures," Univ. Research Program

Defense Security Cooperation Agency (DSCA) (2/1/2012-1/31/2013), **PI**, "Performance Enhancement of Optical Fiber Sensors Based on Nonlinearities and Multi-Dimensional Parameterization"

Gigoptix Corp. (11/10-10/11), **PI**, "100-Gbaud Modulation in Optical Communication Systems"

Defense Advanced Research Projects Agency (DARPA) (2/11-2/12)**, PI,** "High-Speed Optical Processing of Sparse Aperture Image Data (50 Megapixels, 10-bit Depth) using Tunable Optical Tapped-Delay-Lines," MTO/STO Study

Google Faculty Research Awards Program (11/11-10/12), **PI**, "Cost-Effective, Ubiquitous Optical SNR Performance Monitoring to Enhance Stability and Reconfigurability in Advanced, High-Capacity Google Networks"

GRANTS: (CONTINUED)

Defense Advanced Research Projects Agency (DARPA) (6/12-1/14)**, PI,** "Reconfigurable Networking Functions (Add/Drop, Data Exchange, Multicasting) in OAM-Based Systems," DSO Study

National Science Foundation (NSF) (3/2012-3/2015), **PI**, "Terabit-per-second Data Processing to Extract Features of Interest in Enormous Amount of Data"

Air Force Office of Scientific Research (AFOSR) (7/12-7/15), **PI**, "Tailoring of Dispersion and Nonlinearity of Slotted Waveguides and Ring Resonators to Achieve Stable, Efficient, Octave-Spanning Optical Frequency Combs," Basic Research Initiative (BRI) Program

Intel Labs University Research Office (URO) (12/12-12/15), **Co-PI**, "Higher, Denser, Wilder: Massively Broadband and Adaptive Wireless for 5th Generation Wireless Communications" (PI: A. Molisch, USC)

Google Faculty Research Awards Program (1/13-12/13), **PI**, "Reconfigurable, Ubiquitous Optical Signal-to-Noise-Ratio Monitoring to Enhance Stability and Upgradability in Google's Present and Future High-Capacity Networks"

National Science Foundation (NSF) (9/13-8/15), "Center for Integrated Access Networks (CIAN)," Engineering Research Center, **Thrust Leader** (PI - Nasser Peyghambarian, Univ. of Arizona)

National Science Foundation (NSF) (10/13-9/16), **Co-PI**, INSPIRE Program, "An Optical Turing Machine for Native Computing using High-Capacity Transmission Modulation Format Symbols" (PI: Joe Touch, USC ISI)

Nxgen Partners (5/14-8/15), **PI**, "Application of Orbital Angular Momentum to Communications"

Bandwidth10 (5/14-7/15), **PI**, USC-1347563, NSF, Option 1: Small-Business ERC Collaborative

Air Force Office of Scientific Research (AFOSR) (12/14-6/15), **Co-PI**, "Terabit Optical COMMunications System (TOCOMM)," STTR Program

Air Force Office of Scientific Research (AFOSR) (6/15-6/19), **PI**, "Fundamental Understanding of the Physics of Kerr Frequency Comb and Its Effects on the Applications of Coherent Communication, Signal Processing and Measurement"

Defense Security Cooperation Agency (DSCA) (11/15-1/16), **PI**, "Tunable Discrete Random Access Optical Buffer"

Defense Security Cooperation Agency (DSCA) (11/15-11/16), **PI**, "Generic Fabrication Methodology for VIS-IR Integrated Electrooptical Circuits"

Fujitsu (4/15-4/16), **PI**, "Optical Signal Processing Functions in an Optical Network"

National Institute of Standards and Technology (NIST) (2/16-1/17), **PI**, "Measurement, Technology, and Analysis of Overlapped Channels for the Optimal Use of Spectrum in Communication Systems"

NxGen Partners (12/15-8/16), **PI**, "Using OAM Beams for High-capacity RF E-band & Optical Fiber km Links"

Air Force Office of Scientific Research (AFOSR) (3/16-2/18), **Co-PI**, "Phase II, The Terabit Optical COMMunications (TOCOMM) System" (PI: Robert Bock, R-Dex)

GRANTS: (CONTINUED)

National Science Foundation (NSF) (6/15-5/18), **Co-PI**, "Fundamentals of Wireless Communication Systems using Orbital Angular Momenta" (PI: Andreas F. Molisch)

Office of Naval Research (ONR) (7/15-7/18), **Co-PI**, "High-Capacity, Free-Space Quantum Key Distribution based on Spatial and Polarization Encoding" (PI: Robert Boyd, Uuniversity of Rochester)

Office of Naval Research (ONR) (10/15-6/16)**, Co-PI,** "STTR: Precision Optical Navigation Guidance (PRONG) System" (PI: D. Starodubov, FOMS, Inc.)

Huawei / Futurewei (2/16-2/18), **PI,** "Optical Signal Processing for All-Optical Networks"

Intel Labs (2/16-2/19), **PI,** "OAM-Based Wireless Systems"

Defense University Research Instrumentation Program (DURIP) (07/16-06/17), **PI**, "High Baud-Rate and High-Order QAM Optical Transmitter for Long-Range Terabit-per-Second Free-Space Optical Communications Using Orbital Angular Momentum"

National Science Foundation (NSF) (07/16-03/17), **Co-PI**, "STTR Phase I: TeraLink - Next Generation Free Space Optical Communications System"

Huawei / Futurewei (7/16-7/17), **PI,** "Perspectives on the Future of Optical Communications"

Vannevar Bush Faculty Fellowship (VBFF) (08/16-07/21), **PI**, "Multiple Structured Electromagnetic Waves Containing Orbital Angular Momentum for Novel Communications, Imaging, and Directed Energy"

Fujitsu (4/17-9/18), **PI**, "Insights for Future Optical Communication Systems"

Lyteloop Technologies, (11/17), "Equipment donation (spatial light modulator)"

Air Force Office of Scientific Research (AFOSR) SBIR (01/18-03/19)**, Co-PI,** "The Tunable and Reconfigurable Integrated Platform (TRIP) for OAM Generation, Multiplexing, Demultiplexing and Detection" (PI: Robert Bock, R-Dex)

Fujitsu (04/18-04/19), **PI**, "Optical Signal Processing"

Naval Air Systems Command (NAVAIR) SBIR (06/18-12/18)**, Co-PI,** "Enhanced Robustness and Reliability for Free-Space Optical Communication Link Using Spatial Diversity (SD-Link)" (PI: Robert Bock, R-Dex)

Defense Advanced Research Projects Agency (DARPA) (7/18-6/22)**, Co-PI,** " Giant Nonlinear Response of ENZ Metastructures" (PI: Robert Boyd, Uuniversity of Rochester)

Air Force Office of Scientific Research (AFOSR) SBIR (12/19-12/21)**, Co-PI,** "Phase II: The Tunable and Reconfigurable Integrated Platform (TRIP) for OAM Generation, Multiplexing, Demultiplexing and Detection" (PI: Robert Bock, R-Dex)

Defense University Research Instrumentation Program (DURIP) (04/20-04/21), **PI**, "Signal Source Analyzer for Frequency Comb, Orbital Angular Momentum Applications, and Highly Nonlinear Materials"

GRANTS: (CONTINUED)

Naval Information Warfare Center (NIWC) (07/20-01/21), **PI**, "Physics Based Propagation Modeling for OAM Multiplexed Optical Communication Links"

Office of Naval Research under a Multidisciplinary University Research Initiative (MURI) (06/20-06/25), **Co-PI**, "High Photon Density Spatiotemporal (OAM+SAM) Vector Beams for Maritime Environments" (PI: E. Johnson, Clemson University)

Office of Naval Research under a Multidisciplinary University Research Initiative (MURI) (07/20-07/25), **Co-PI**, "Classical Entanglement in Structured Optical Fields" (PI: A. Abouraddy, Univ. of Central Florida)

Defense Security Cooperation Agency (DSCA) (07/2020-07/21), **PI**, "High-Capacity Data Transmission Link Between a Ground Terminal and a Flying Drone using Multiplexing of Multiple Optical Orbital-Angular-Momentum Beams"

Defense Security Cooperation Agency (DSCA) (06/2020-06/21), **PI**, "Enhancing the Utilization of Structed Beams for Localization and Hiding by Diversity and Compensating Turbulence Effects"

Nippon Telephone and Telegraph (NTT) (07/20-07/21), **PI**, "Experimental Implementation of a High-Capacity Wireless Link by Exploiting Orbital Angular Momentum Modes Multiplexing in the Sub-THz Regime"

Defense Advanced Research Projects Agency (DARPA) (07/20-07/21), **Co-PI**, "Scalable All-Optical Processing – Remotely (SCALOP-R)" (PI: J. Habif, USC ISI)

Airbus Institute for Engineering Research (AIER) Board (09/20-09/22), **PI**, "Towards Terabit/sec High-Capacity Free-Space Optical Communication Links to Airplanes using Multiplexing of Orthogonal Beams"

Qualcomm Innovation Fellowship (9/20-10/21), **Supervisor**, "High-Capacity Mode-Division-Multiplexed Wireless Communications Within and Beyond Millimeter-Wave Band"

Air Force Research Laboratory (AFRL) though University of New Mexico COSMIAC (9/2021-9/2023), **PI**, Subaward on Program "Communications and Position Navigation and Timing (PNT) (COMPNT)"

Airbus Institute for Engineering Research (AIER) Board (09/22-09/25), **PI**, "Utilizing Structured Light to Enable Both 3D Probing of Turbulence and Resilient High-Capacity Communications Through Turbulence"

Office of Naval Research (ONR) STTR (06/22-12/22)**, Co-PI,** "Phase I: Structured-Light-Based High-Resolution and High-Dynamic-Range Optical Underwater Ranging" (PI: Robert Bock, R-Dex)

Defense Advanced Research Projects Agency (DARPA) (9/22-10/24)**, Co-PI,** "Phase I: Space-Based Adaptive Communications Node" (PI: Keren Bergman, Columbia University)

Defense Advanced Research Projects Agency (DARPA) (4/22-4/24)**, Co-PI,** "DIAMOND: Distributed Training of Massive Models at Bandwidth Frontiers" (PI: Jonathan Habif, USC ISI)

Office of Naval Research (ONR) STTR (5/23-10/23)**, Co-PI,** "Phase I Option: Structured-Light-Based High-Resolution and High-Dynamic-Range Optical Underwater Ranging" (PI: Robert Bock, R-Dex)

Office of Naval Research (ONR) STTR (10/23-09/25)**, Co-PI,** "Phase II: Structured-Light-Based High-Resolution and High-Dynamic-Range Optical Underwater Ranging" (PI: Robert Bock, R-Dex)

GRANTS: (CONTINUED)

National Science Foundation (NSF) (10/23-9/26), **Co-PI**, "Impact of Radiation Trapping on Sensing and Communication Systems in the THz, Infrared, and Optical Regime - Foundations, Challenges, and Opportunities" (PI: Andreas F. Molisch, USC)

Office of Naval Research (ONR) STTR (10/24-8/25)**, Co-PI,** "Phase I: Direct Cross-Domain Optical Data Transfer" (PI: Austin Jantzi, Physical Sciences, Inc.)

Defense Advanced Research Projects Agency (DARPA) (10/24-9/25)**, Co-PI,** "Phase II: Space-Based Adaptive Communications Node" (PI: Keren Bergman, Columbia University)

Defense Advanced Research Projects Agency (DARPA) (3/25-9/26)**, Co-PI,** "EMON Program: Next-Generation Radar with Enhanced Information Extraction and Resolution Utilizing Advanced Spatially Structured Electromagnetic Waves" (PI: Andreas Molisch, USC)

USC ACTIVITIES:

Co-Chair, Provost's University Committee on Appointments, Promotions, and Tenure (UCAPT) ('24-'26)

Member, Panel to interview Candidates, Director of Faculty Administration, Provost's Office ('25)

Chair, Natural Sciences and Engineering Panel, Provost's University Committee on Appointments, Promotions, and Tenure (UCAPT) ('23-'25)

Member, ECE Department Merit Review Committee, Research Subcommittee ('24)

Member, Proposal Review Committee, Energy Frontier Research Center Program, USC Office of VP Research ('22)

Member, USC University Research Network ('22-'24)

Chair, Teaching & Service Subcommittee, Merit Review Committee, Dept. of ECE-Systems ('22)

Member, Natural Sciences/Engineering Panel, University Committee on Appointments, Promotions, and Tenure (UCAPT) ('21-'23)

Member, Review Committee, Vice President of Research, USC Nominations for Packard Fellowships in Science & Engineering ('21-'24)

Member, Provost's USC Decanal Review Advisory Committee of Dean Yortsos ('21)

Member, ECE Merit Review Committee (Teaching) ('21)

Member (VSoE Committee) and Chair (ECE-S, Subcommittee), Covid-19 Research Restart Task Force, VSoE ('20)

Member, USC VSoE Space Council ('19-'20)

Member, Award Committee, Associates Award for Creativity in Research (several years within '13-'19)

Director, Communications Sciences Institute, Ming Hsieh Dept. of Electrical Eng. ('16-'17)

Faculty Advisor, IEEE, USC Student Chapter ('15-'18)

Faculty Advisor, OSA Student Chapter at USC ('14-'18)

Member, Graduate Curriculum Committee, Ming Hsieh Dept. of Electrical Engineering – Systems ('16-'17)

Chair, Provost's University-Wide Committee on Academic Review (UCAR) (2013-2015)

Co-Chair, Provost's University-Wide Committee on Academic Review (UCAR) (2012-2013)

Chair, Provost's University-Wide Ph.D. Fellowship Evaluation Task Force (2011-2012)

Chair, Provost's University-Wide Graduate School Committee, Fellowships, Prizes & Awards ('09-'11)

President, USC Chapter of Phi Kappa Phi All-University Honor Society ('11-'12)

Vice President, USC Chapter of Phi Kappa Phi All-University Honor Society ('10-'11)

Executive Board Member, USC Chapter of Phi Kappa Phi All-University Honor Society ('09-'12)

Member, Provost's Advisory Committee on Transformational Hiring in Sciences & Eng. ('11-'12)

Member, Vice-Provost's The Graduate School Faculty Advisory Council (2011-2012)

Faculty Advisory Committee, USC Viterbi School of Eng., New Frontiers of Science & Eng. Bldg. ('10)

Provost's Conflict of Interest in Research Committee ('07-'08, '08-'09, '09-'10)

Provost's Conflict of Interest in Research Task Force ('10-'11)

Member, Award Committee, Associates Award for Excellence in Teaching (several years within '04-'09)

Provost's Faculty Working Group for "Defining the New Diploma in Ph.D. Innovation" ('08-'09)

Provost's Graduate School Committee on Fellowships, Prizes, and Awards ('07-'08, '08-'09)

Member, Dean's Committee of the Unification of the Ming Hsieh EE Dept., USC Viterbi School of Eng. ('10)

Executive Committee, Ming Hsieh Dept. of Electrical Engineering - Systems ('07-'11 and '16-'17)

Co-Director, Communications Sciences Institute, Ming Hsieh Dept. of Electrical Eng. ('07-'11)

Academic Program Review Subcommittee, Ming Hsieh Dept. of EE Advisory Board Committee ('10)

Student Affairs Committee of the USC Board of Trustees, Faculty Member ('06-'07)

Organizer, Students' Practical Guide Seminar Series, Ming Hsieh Dept. of Electrical Eng. ('07-'09)

Co-Chair, Departmental Retreat Committee, Ming Hsieh Dept. of Electrical Eng. ('07)

USC ACTIVITIES: (CONTINUED)

Member, Awards Committee, Ming Hsieh Dept. of Electrical Eng. ('07-'08, '08-'09, '11-'12)
Member, Research Committee of the Engineering Faculty Council, USC Viterbi School of Eng. ('07)
USC Center for Excellence in Teaching (CET), Teaching Assistant Training Program ('06)
University-Wide Committee on Appointments, Promotions, & Tenure (UCAPT) ('03-'04,'04-'05,'08-'10)
Provost's University Financial Disclosures Review Committee ('03-'04, '04-'05, '05-'06, '06-'07)
Committee, University-Wide Associates Awards, Excellence in Teaching & Outstanding TA ('03-'05,'07-'10)
Faculty Advisor, Alpha Delta Sigma, USC Jewish Honor Campus Fraternity
Nominated and Accepted, Provost's Leadership Council ('97-'98)
USC Department of Electrical Engineering – Systems, Chair Search Committee ('02-'03)
Chair, Best Student Research Paper Award Committee, Dept. of Electrical Engineering ('02)
Director's Search Committee, USC's NSF Engineering Research Center in Multimedia ('01-'02)
USC School of Engineering Dean's Search Committee ('00-'01)
USC School of Engineering Research Committee ('99-'00)
Elected, USC Engineering Appointments, Promotions, & Tenure Committee ('94-'98)
Associate Director, USC Integrated Media Systems Center, Student Affairs ('96-'01)
University Committee on Patents and Technology ('94-'97)
Associate Director, USC Center for Photonic Technology ('94-present)
USC School of Engineering Restructuring Subcommittee ('96)
USC School of Engineering Systems Architecting Committee ('97)
USC School of Eng. Recruitment Enrollment Management Committee ('94-'96)
Faculty Advisor, Optical Society of America, USC Student Chapter ('95-present)
Board of Directors, LA Hillel City Board, USC Representative ('95-'97)
Faculty Advisory Board, USC Hillel Organization ('92-'99)
Seminar Series Coordinator (Communications Sciences Institute) ('92-'95)
Ph.D. Screening Exam Coordinator (Communications Sciences Institute) ('92-'97)

PUBLICATIONS

U.S. PATENTS: (*non-U.S. patents not listed here*)

1. Title: A Method of Localized Photochemical Etching of Multilayered Semiconductor Body (U.S. Pat. Ser. No. 5,081,002), Co-Inventors w/ A.E. Willner: M. N. Ruberto, D. V. Podlesnik, and R. M. Osgood, Jr. (Jan. 14, 1992)

2. Title: One-To-Many Simultaneous Optical Two-Dimensional Plane Interconnections using Multiple Wavelength, Vertical Cavity, Surface-Emitting Lasers and Wavelength-Dependent Detector Arrays (U.S. Pat. Ser. No. 5,546,209), Co-Inventors w/ A.E. Willner: C.J. Chang-Hasnain and J.E. Leight. (Aug. 13, 1996)

3. Title: Tunable Dispersion Compensator Based on a Nonlinearly-Chirped Fiber Bragg Grating (U.S. Pat. Ser. No. 5,982,963), Co-Inventors w/ A.E. Willner: J.-X. Cai, J. Feinberg, K.-M. Feng, V. Grubsky, and D.S. Starodubov. (Nov. 9, 1999)

4. Title: Integrated Bi-directional Gradient Refractive Index Multiplexer (U.S. Pat. Ser. No. 6,011,885), Co-Inventors w/ A.E. Willner: J.R. Dempewolf, R.H. Dueck, B.V. Hunter, and R.K. Wade. (Jan. 4, 2000)

5. Title: Dispersion Compensation by using Tunable Nonlinearly Chirped Gratings (U.S. Pat. Ser. No. 6,330,383), Co-Inventors w/ A.E. Willner: J.-X. Cai, K.-M. Feng, R. Khosravani, S. Lee, and J. Peng. (Dec. 11, 2001)

6. Title: Optical Compensation for Dispersion-Induced Power Fading in Optical Transmission of Double-Sideband Signals (U.S. Pat. Ser. No. 6,388,785), Co-Inventors w/ A.E. Willner: O.H. Adamczyk, S.A. Havstad, A.B. Sahin, and Y. Xie. (May 14, 2002)

7. Title: Tunable Compensation for Polarization-Mode Dispersion using a Birefringent Nonlinearly-Chirped Grating in a Dual-Pass Configuration (U.S. Pat. Ser. No. 6,400,869), Co-Inventors w/ A.E. Willner: S. Lee, Z. Pan, and Y. Xie. (June 4, 2002)

8. Title: Dynamic Power Equalization of Many Wavelength-Division-Multiplexed Channels in a Fiber Optic System using Acousto-Optic Technology (U.S. Pat. Ser. No. 6,341,021), Co-Inventors w/ A.E. Willner: J.-X. Cai, K.-M. Feng, S.H. Huang, D.A. Smith, and X.Y. Zou. (Jan. 22, 2002) [*Note: Name misspelled as "Wilner" in patent.]*

9. Title: Tunable Optical Dispersion-Slope Compensation Based on a Nonlinearly-Chirped Bragg Grating (U.S. Pat. Ser. No. 6,453,093), Co-Inventors w/ A.E. Willner: S. Lee, Z. Pan, and Y. Xie. (Sept. 17, 2002)

10. Title: Tuning of Optical Dispersion by using a Tunable Fiber Bragg Grating (U.S. Pat. Ser. No. 6,453,095), Co-Inventors w/ A.E. Willner: J.-X. Cai, J. Feinberg, K.-M. Feng, V. Grubsky, and D.S. Starodubov. (Sept. 17, 2002)

11. Title: Optical Detection of a Fiber Span with High Polarization-Mode Dispersion in a Fiber System (U.S. Pat. Ser. No. 6,459,479), Co-Inventors w/ A.E. Willner: S. Lee. (Oct. 1, 2002)

12. Title: Technique for Detecting the Status of WDM Optical Signals (U.S. Pat. Ser. No. 6,480,648), Co-Inventors w/ A.E. Willner: J.R. Dempewolf, W.W. Peck, I. Turner, and R.K. Wade. (Nov. 12, 2002)

13. Title: Polarization-Mode Dispersion Emulator (U.S. Pat. Ser. No. 6,542,650), Co-Inventors w/ A.E. Willner: P. Ebrahimi, E. Ibragimov, R. Khosravani, I.T. Lima, Jr., and C.R. Menyuk. (April 1, 2003)

14. Title: Compensation and Control of Both First-Order and Higher-Order Polarization-Mode Dispersion (U.S. Pat. Ser. No. 6,654,103), Co-Inventors w/ A.E. Willner: S. Lee, L.-S. Yan, and Q. Yu. (Nov. 25, 2003)

15. Title: Compensation for Polarization-Mode Dispersion in Multiple Wavelength-Division Multiplexed Channels Without Separate Compensation for Each Individual Channel (U.S. Pat. Ser. No. 6,603,890), Co-Inventors w/ A.E. Willner: P. Ebrahimi, S.A. Havstad, R. Khosravani, and Y.W. Song. (Aug. 5, 2003)

16. Title: WDM Fiber Amplifiers using Sampled Bragg Gratings (U.S. Pat. Ser. No. 6,621,627), Co-Inventors w/ A.E. Willner: Z. Pan and Y. Xie. (Sept. 16, 2003)

17. Title: Polarization-Division Multiplexing Based on Power Encoding of Two Different Polarization Channels (U.S. Pat. Ser. No. 6,714,742), Co-Inventors w/ A.E. Willner: M.C. Cardakli and M.I. Hayee. (March 30, 2004)

18. Title: Intra-Bit Polarization Diversity Modulation (U.S. Pat. Ser. No. 6,646,774), Co-Inventors w/ A.E. Willner: T. Luo, Z. Pan, A.B. Sahin, Y. Wang, C.-Y. Yu, and Q. Yu. (Nov. 11, 2003)

19. Title: Reconfigurable Optical Recognition of Bit Information in a Digital Data Stream with Different Bit Rates (U.S. Pat. Ser. No. 6,751,416), Co-Inventors w/ A.E. Willner: M.C. Cardakli, D. Gurkan, and S. Lee. (June 15, 2004)

20. Title: Devices and Applications Based on Tunable Waveguiding Bragg Gratings with Nonlinear Group Delays (U.S. Pat. Ser. No. 6,915,040), Co-Inventors w/ A.E. Willner: Y.W. Song and S.M.R. Motaghian Nezam. (July 5, 2005)

21. Title: Optical Dispersion Monitoring Based on Vestigial Sideband Optical Filtering (U.S. Pat. Ser. No. 7,035,538), Co-Inventors w/ A.E. Willner: Z. Pan, L.-S. Yan, and Q. Yu. (April 25, 2006)

22. Title: Monitoring and In-Line Compensation of Polarization Dependent Loss for Lightwave Systems (U.S. Pat. Ser. No. 7,206,517), Co-Inventors w/ A.E. Willner: L.-S. Yan and Q. Yu. (April 17, 2007)

23. Title: Optically Boosted Router (U.S. Pat. Ser. No. 7,369,766), Co-Inventors w/ A.E. Willner: J. Bannister, J. McGeehan, P. Kamath, A. Patel, and J.D. Touch. (May 6, 2008)

24. Title: Code Cycle Modulation: Concept and Implementation (U.S. Pat. Ser. No. 7,616,618), Co-Inventors w/ A.E. Willner: P.V. Kumar, R. Omrani, P. Saghari, and J.D. Touch. (Nov. 10, 2009)

25. Title: Waveguide-Based Dispersion Device (U.S. Pat. Ser. No. 8,483,529), Co-Inventors w/ A.E. Willner: Y. Yue and L. Zhang. (July 9, 2013)

26. Title: Sweep-Free Stimulated Brillouin Scattering-Based Fiber Optical Sensing (U.S. Pat. Ser. No. 8,800,375), Co-Inventors w/ A.E. Willner: M. Tur and A. Voskoboinik. (Aug. 12, 2014)

27. Title: All-optical Tunable Tapped-Delay-Lines using Wavelength Conversion and Chromatic Dispersion Based Delays (U.S. Pat. Ser. No. 8,976,445), Co-Inventors w/ A.E. Willner: S. Khaleghi, M. R. Chitgarha, and O. Yilmaz. (March 10, 2015)

28. Title: On-Chip Two-Octave Supercontinuum Generation Enabled by Advanced Chromatic Dispersion Tailoring in Slotted Waveguides (U.S. Pat. Ser. No. 9,110,219), Co-Inventors w/ A.E. Willner: Y. Yan, Y. Yue, and L. Zhang. (Aug. 18, 2015)

29. Title: Mirrorless-Oscillation in a Waveguide using Non-Degenerate Four-Wave Mixing (U.S. Pat. Ser. No. 9,086,609), Co-Inventors w/ A.E. Willner: Y. Yan and L. Zhang (July 21, 2015)

30. Title: Reconfigurable Optical Transmitter (U.S. Pat. Ser. No. 9,166,721), Co-Inventors w/ A.E. Willner: S. Khaleghi and M. R. Chitgarha. (October 20, 2015)

31. Title: Automatically Locked Homodyne Detection (U.S. Pat. Ser. No. 9,625,320), Co-Inventors w/ A.E. Willner: M. R. Chitgarha, S. Khaleghi, A. Mohajerin-ariaei and M. Ziyadi (Apr. 18, 2017)

32. Title: Systems and Techniques for Orbital Angular Momentum Based Reconfigurable Switching (U.S. Pat. Ser. No. 9,768,909), Co-Inventors w/ A.E. Willner: N. Ahmed, H. Huang, Y. Ren, M. Tur, M. J. Willner, Y. Yan and Y. Yue (Sept. 19, 2017)

33. Title: Adaptive Optics Based Simultaneous Turbulence Compensation of Multiple Orbital Angular Momentum Beams (U.S. Pat. Ser. No. 9,780,872), Co-Inventors w/ A.E. Willner: H. Huang, Y. Ren and G. Xie (Oct. 3, 2017)

34. Title: Phase-Sensitive Regeneration without a Phase-Locked Loop using Brillouin Amplification (U.S. Pat. Ser. No. 10,270,536), Co-Inventors w/ A.E. Willner: A. Almaiman, Y. Cao, and M. Ziyadi (Apr. 23, 2019)

35. Title: Systems and Techniques for Communication using Multiple-Input-Multiple-Output Processing of Orbital Angular Momentum Modes (U.S. Pat. Ser. No. 10,291,300), Co-Inventors w/ A.E. Willner: Y. Ren, and L. Li (May 14, 2019)

36. Title: Tunable Optical Channel Slicing and Stitching to Enable Dynamic Bandwidth Allocation (U.S. Pat. Ser. No. 10,277,326), Co-inventor: Y. Cao (April 30, 2019)

37. Title: Systems and Techniques for Communication Using Combined Orbital Angular Momentum and Multiple-Input-Multiple-Output Processing (U.S. Pat. Ser. No. 10,411,811), Co-Inventors w/ A.E. Willner: Y. Ren, L. Li, G. Xie, Y. Cao, Z. Wang, C. Liu, and A. J. Willner (Sept. 10, 2019)

38. Title: Data Encoding and Channel Hopping Using Orbital Angular Momentum Modes (U.S. Pat. Ser. No. 10,750,257), Co-Inventors w/ A.E. Willner: Y. Ren, L. Li, A. J. Willner, and G. Xie (August 18, 2020)

39. Title: System and Method for Extending Path Length of a Wave Signal Using Angle Multiplexing (U.S. Pat. Ser. No. 10,789,009), Co-Inventors w/ A.E. Willner: P. F. McManamon, D. Damaghi, O. Harlev, A. Vedadi-Comte, C. R. Palanzo, and R. J. Howard (Sept. 29, 2020)

40. Title: Data in Motion Storage System and Method (U.S. Pat. Ser. No. 10,812,880), Co-Inventors w/ A.E. Willner: D. Damaghi, O. Harlev, A. Litvin, N. Barak, P. F. McManamon, A. Mcguffin (Oct. 20, 2020)

41. Title: Spatial Light Structuring Using a Combination of Multiple Orthogonal Orbital Angular Momentum Beams with Complex Coefficients (U.S. Pat. Ser. No. 10,914,959), Co-Inventors w/ A.E. Willner: L. Li, C. Liu, Y. Ren, G. Xie, and Z. Zhao (Feb. 9, 2021)

42. Title: Multiple Kerr-Frequency-Comb Generation Using Different Lines from a Remote Kerr Comb (U.S. Pat. Ser. No. 11,106,111), Co-Inventors w/ A.E. Willner: P. Liao, A. Almaiman, C. Bao (Aug. 31, 2021)

43. Title: Data in Motion Storage System and Method (U.S. Pat. Ser. No. 11,190,858), Co-Inventors w/ A.E. Willner: D. Damaghi, O. Harlev, A. Litvin, N. Barak, P. F. McManamon, A. McGuffin (Nov. 30, 2021)

44. Title: Systems and Methods for Building, Operating and Controlling Multiple Amplifiers, Regenerators and Transceivers Using Shared Common Components (U.S. Pat. Ser. No. 11,243,355), Co-Inventors w/ A.E. Willner: D. Damaghi, O. Harlev, P. F. McManamon, A. Vedadi-Comte, D. D. Choudhary (Feb. 8, 2022)

45. Title: Apparatus and Method for Storing Wave Signals in a Cavity (U.S. Pat. No. 11,361,794), Co-Inventors w/ A.E. Willner: D. Damaghi, O. Harlev, A. Vedadi-Comte, P. F. McManamon (June 14, 2022)

46. Title: System and Method for Extending Path Length of a Wave Signal Using Angle Multiplexing (U.S. Pat. Ser. No. 11,467,759), Co-Inventors w/ A.E. Willner: P. F. McManamon, D. Damaghi, O. Harlev, A. Vedadi-Comte, C. R. Palanzo, and R. J. Howard (Oct. 11, 2022)

47. Title: Optical Mitigation of Inter-Channel Crosstalk for WDM Channels (U.S. Pat. Ser. No. 11,652,556), Co-Inventors w/ A.E. Willner: F. Alishahi, Y. Cao, A. Fallahpour, A. Mohajerin-Ariaei (May 16, 2023)

48. Title: Remotely Biasing, Controlling, and Monitoring a Network Routing Node Based on Remotely Provided Optical Signals (U.S. Pat. Ser. No. 12,250,502), Co-Inventors w/ A.E. Willner: A. Minoofar, F, Alishahi, A. Fallahpour, and J.L. Habif (Mar. 11, 2025)

BOOKS:

1. **Optical Fiber Telecommunications VII,** Alan E. Willner, editor, Elsevier Publishers, Academic Press, San Diego, Oct. 2019, ISBN: 978-0-12-816502-7.

   **** Top 10 Best Electrical Fiber Optics Books Ranked by FINDTHISBEST.COM ****

2. **Novel Insights into Orbital Angular Momentum** Beams**: From Fundamentals, Devices to Applications,** Yang Yue, Hao Huang, Yongxiong Ren, Zhongqi Pan, and Alan E. Willner, co-editors, MDPI AG, Basel, Switzerland, Sept. 2019, ISBN: 978-3-03921-223-1.

3. **Optical Fiber Telecommunications VI, Volumes A and B,** Ivan P. Kaminow, Tingye Li, and Alan E. Willner, co-editors, Elsevier Publishers, Academic Press, San Diego, May 2013, ISBN: 978-0-12-396958-3 and 978-0-12-396960-6.

4. **Optical Fiber Telecommunications ebook Collection: Ultimate CD**, Stewart E Miller, Ivan P. Kaminow, Thomas Koch, Tingye Li, and Alan E. Willner, co-editors, Elsevier Publishers, Academic Press, San Diego, Sept. 2008, ISBN: 978-0-12-374643-4 and 978-0-12-374643-6.

5. **Optical Fiber Telecommunications V, Volumes A and B,** Ivan P. Kaminow, Tingye Li, and Alan E. Willner, co-editors, Elsevier Publishers, Academic Press, San Diego, Feb. 2008, ISBN: 978-0-12-374171-4 and 978-0-12-374172-4.

6. **Optical Fiber Communication Systems**, L.G. Kazovsky, S. Benedetto, and A. E. Willner, co-authors, Artech House Publishers, Boston, Oct. 1996, ISBN: 0-89006-756-2.

7. **System Technologies, Trends in Optics and Photonics**, vol. 12, Alan E. Willner and Curtis R. Menyuk, co-editors, Optical Society of America, Washington, D.C., 1997, ISBN: 1-55752-484.

8. **Optical Amplifiers and Their Enabling Technologies, Trends in Optics and Photonics**, vol. 16, and M. N. Zervas, Alan E. Willner, and S. Sasaki, co-editors, Optical Society of America, Washington, D.C., 1998, ISBN: 1-55752-505-6.

9. **Emerging Components and Technologies for All Optical Networks**, Proceedings of SPIE - the International Society for Optical Engineering, vol. 2613, Emil S. Koteles and Alan E. Willner, co-editors, SPIE, Bellingham, WA, 1995, ISBN-13: 978-0819419774.

10. **Optical Fiber Communication**, Proceedings of SPIE - the International Society for Optical Engineering, Winston I. Way, Franklin K. Tong, and Alan E. Willner, co-editors, SPIE, Bellingham, WA, 1998, ISBN-13: 978-0819428745.

INVITED BOOK CHAPTERS:

1. Alan E. Willner, "The Consummate Scholar and Gentleman: Professor Solomon Wolf Golomb, "**The Wisdom of Solomon: The Genius and Legacy of Solomon Golomb**, Chapter 3, pp. 331-345, Beatrice A. Golomb, Guang Gong, and Alfred W. Hales, editors, World Scientific Publishing, July 2023, ISBN: 978-9811234361.

2. Alan E. Willner, Runzhou Zhang, Kai Pang, Haoqian Song, Cong Liu, Hao Song, Xinzhou Su, Huibin Zhou, Nanzhou Hu, Zhe Zhao, Guodong Xie, Yongxiong Ren, Hao Huang, and Moshe Tur, "High-Capacity Communications Using Multiplexing of Multiple Orbital-Angular-Momentum Beams," **Engineering Electromagnetic Vortices: Theory and Applications, First Edition,** Chapter 12, Zhi Hao Jiang and Doug Werner, editors, Wiley, Dec. 2021, ISBN: 978-1119662822.

3. Alan E. Willner, Haoqian Song, Cong Liu, Runzhou Zhang, Kai Pang, Huibin Zhou, Nanzhe Hu, Hao Song, Xinzhou Su, Zhe Zhao, Hao Huang, Guodong Xie, Yongxiong Ren, and Moshe Tur, "Causes and Mitigation of Modal Crosstalk in OAM Multiplexed Optical Communication Links," **Structured Light and Optical Communication, First Edition,** Chapter 10, Mohammad Al-Amri, Mohamed Babiker, and David Andrews, editors, Elsevier Science, May 2021, ISBN: 978-0-128-21510-4.

4. Alan. E. Willner, Yan Yan, Yongxiong Ren, Nisar Ahmed and Guodong Xie, "Orbital Angular Momentum-based Wireless Communications: Designs and Implementations," **Signal Processing for 5G: Algorithms and Implementations, First Edition**, Chapter 13, Fa-Long Luo and Charlie Zhang, editors, John Wiley & Sons, Ltd., Chichester, October 2016, ISBN: 978-1-119-11646-2.

5. Alan. E. Willner, "Optical Communications: The Next 100 Years," **OSA Century of Optics**, Section "The Future", Paul Kelley, Govind Agrawal, Mike Bass, Jeff Hecht and Carlos Stroud, editors, The Optical Society (OSA), Washington, 2015, ISBN: 978-1-943580-04-0.

6. Jian Wang and Alan E. Willner, "High-Base Optical Signal Proccessing," **Applications of Digital Signal Processing through Practical Approach**, Chapter 2, Sudhakar Radhakrishnan, editor, InTech Publishers, San Diego, October 2015, ISBN: 978-953-51-2190-9.

7. Antonella Bogoni and Alan Willner, "Photonic Signal Processing for Login and Computation," **All-Optical Signal Processing: Data Communication and Storage Applications,** Chapter 6, S. Wabnitz and B. Eggleton, editors, Springer Series, vol. 194, Apirl 2015, ISBN: 978-3-319-14991-2.

8. Jian Wang, Miles J. Padgett, Siddharth Ramachandran, Martin P.J. Lavery, Hao Huang, Yang Yue, Nenad Bozinovic, Steven E. Golowich, and Alan E. Willner, "Multimode Communications using Orbital Angular Momentum," **Optical Fiber Telecommunications VIB**, Chapter 12, Ivan P. Kaminow, Tingye Li, and Alan E. Willner, editors, Elsevier Publishers, Academic Press, San Diego, March 2013, ISBN: 978-0-12-396960-6.

9. Jian Wang and Alan E. Willner, "Optical Signal Processing: Data Exchange," **Design and Architectures for Digital Signal Processing,** Chapter 3, Gustavo Ruiz and Juan A. Michell, editors, InTech Publishers, January 2013, ISBN 978-953-51-0874-0.

10. Avi Zadok, Daniel Grodensky, Daniel Kravitz, Yair Peled, Moshe Tur, Xiaoxia Wu and Alan E. Willner, "Ultra-Wideband Waveform Generation using Nonlinear Propagation in Optical Fibers," **Invited Chapter**, in **Ultra Wideband Communications: Novel Trends - Antennas and Propagation,** Mohammad Matin, editor, InTech Publishers, August 2011, ISBN 978-953-307-452-8.

11. A.E. Willner, Jeng-Yuan Yang, and Xiaoxia Wu, "Optical Performance Monitoring: Perspectives and Challenges," **Optical Performance Monitoring Techniques for Next Generation Photonic Networks**, Calvin Chan, editor, Elsevier Publishers, Academic Press, San Diego, 2010.

12. L. Zhang and A. E. Willner, "Micro-Resonators for Communication and Signal Processing Applications," **Photonic Microresonator Research and Applications**, Chapter 19, I. Chremmos, O. Schwelb and N. Uzunoglu, editors, Springer Publishing House, New York, ISBN: 978-1-4419-1743-0, 2010.

13. Alan E. Willner, Changyuan Yu, Zhongqi Pan, and Yong Xie, "WDM Fiber Optic Communication Networks," **Handbook of Optics, Volume V,** Chapter 21, G. Li and C. DeCusatis, editors, McGraw-Hill, Inc., New York, New York, 2009.

14. A.E. Willner, Z. Pan, and C. Yu, "Optical Performance Monitoring," **Optical Fiber Telecommunications VB**, Chapter 7, Ivan P. Kaminow, Tingye Li, and Alan E. Willner, editors, Elsevier Publishers, Academic Press, San Diego, Feb. 2008, ISBN: 978-0-12-374172-4.

15. I.P. Kaminow, Tingye Li, and A.E. Willner, "Overview Chapter," **Optical Fiber Telecommunications V, Volumes A and B,** Chapter 1, Ivan P. Kaminow, Tingye Li, and Alan E. Willner, editors, Elsevier Publishers, Academic Press, San Diego, 2008, ISBN: 978-0-12-374171-4 and 978-0-12-374172-4.

16. A.E. Willner, B. Zhang, and L. Zhang, "Reconfigurable Signal Processing using Slow-Light-based Tunable Optical Delay Lines," **Slow Light: Science and Applications**, Chapter 16, Jacob B. Khurgin and Rodney S. Tucker, editors, Optical Science and Engineering Series, CRC Press, Taylor and Francis Publishers, 2008, ISBN: 978-1420061512.

17. A.E. Willner and Z. Pan, "Optical Characterization, Diagnosis, and Performance Monitoring for PONs," **Passive Optical Network Technologies**, Cedric Lam, editor, Chapter 7, pp. 267-300, Academic Press, Nov. 2007, ISBN: 0-12-373853-9.

18. A.E. Willner and Z. Pan, "Optical Communications," **CRC Handbook of Photonics, 2nd Edition**, M.C. Gupta, editor, CRC Press, Florida, 2006, ISBN: 0-8493-3095-7.

19. A.E. Willner and M.C. Hauer, "PMD Emulation," **Polarization Mode Dispersion**, Chapter 16, Andrea Galtarossa and Curtis Menyuk, editors, Springer-Verlag Publishers, Berlin, 2005, ISBN: 0-387-23193-5.

20. A.E. Willner and R. Khosravani, "Photonic Networks," **Electrical Engineering Handbook**, 3rd Ed., CRC Press, R.C. Dorf, editor, Chapter 3.3, Florida, 2005, ISBN: 084932274X.

21. A.E. Willner and B. Hoanca, "Fixed and Tunable Management of Fiber Chromatic Dispersion," **Optical Fiber Telecommunications IVB**, Ivan P. Kaminow and Tingye Li, editors, Chapter 14, pp. 642-724, Academic Press, March 2002, ISBN: 0-12-395173-1.

22. Alan E. Willner, Reza Khosravani, and Saurabh Kumar, "Optical Packet and Burst Switching," **Optical Switching**, Tarek S. El-Bawab, editor, Chapter 13, Springer-Verlag Publishers, 2006, ISBN: 0-387-26141-9.

23. Alan E. Willner and Yong Xie, "Wavelength-Division-Multiplexed Fiber Optic Communication Networks," **Fiber Optics Handbook: Fiber, Devices, and Systems for Optical Communications**, M. Bass and E.W. Van Stryland, editors, pp. 13.1-13.31, McGraw-Hill, Inc., New York, 2001, ISBN: 0-07-138623-8.

24. A.E. Willner and Y. Xie, "WDM Fiber Optic Communication Networks," **Handbook of Optics**, Second Edition, vol. IV, pp. 13.1-13.31, McGraw-Hill, Inc., New York, New York, 2001, ISBN: 0-07-136456-0.

25. A.E. Willner, "Optical Communications," **CRC Handbook of Photonics**, M.C. Gupta, editor, CRC Press, Boston, Feb. 1997, ISBN: 0-8493-8909-7.

26. A.E. Willner, "Optical Amplifier Cascades for Long-Distance and Ring-Based WDM Communications," **Emerging Optoelectronic Technologies**, A. Selvarajan and K. Shenai, editors, Institute of Electrical and Telecommunications Engineers, SPIE Press, May 1995.

TUTORIALS:

1. Alan E. Willner, "Advances in Core Technologies and Wave-Mixing Techniques for Optical Signal Processing," **Invited Tutorial, 13th Conference on Lasers and Electro-Optics Pacific Rim (CLEO-PR)**, paper Tu3D, Hong Kong, July 2018.

2. Alan E. Willner, "High-Capacity Communications Using Multiplexing of Multiple Orthogonal Orbital-Angular-Momentum Beams," **Invited Tutorial, International Nano-Optoelectronics Workshop (iNOW)**, Berkeley, CA, July 2018.

3. Alan E. Willner, "Advances in Components and Integrated Devices for OAM-Based Systems," **Invited Tutorial, Conference on Lasers and Electro-Optics (CLEO)**, paper Stu3B.1, San Jose, CA, May 2018 (Optical Society of America, Wash., D.C., 2018).

4. Alan E. Willner, "All-Optical Signal Processing Techniques for Flexible Networks," **Invited Tutorial**, **IEEE/OSA Conference on Optical Fiber Communications (OFC) Conference,** paper W3E.5, San Diego, CA, Mar. 2018 (Optical Society of America, Washington, D.C., 2018).

5. Alan E. Willner, "Recent Advancements in Optical Orbital-Angular-Momentum Multiplexing," **Invited Tutorial, Latin American Optics and Photonics (LAOP)**, Cancun, Mexico, Nov. 2014.

6. Alan E. Willner, "OAM Multiplexing: Orbital Angular Momentum Multiplexing," **Invited Tutorial, 87th IEEE 802.15 WPAN Meeting**, Los Angeles, CA, Jan. 2014 (IEEE, Piscataway, NJ, 2014).

7. Alan E. Willner, "Spatial and Mode Division Multiplexing for Optical Communications,"**Invited Tutorial**, **IEEE Military Communications Conference** (MILCOM), San Diego, CA, Nov. 2013 (IEEE, Piscataway, NJ, 2013).

8. Alan E. Willner, "Optical Signal Processing,"**Invited Tutorial**, **IEEE/OSA Conference on Optical Fiber Communications (OFC) and National Fiber Optics Engineers Conference (NFOEC),** paper OM2G.5, Anaheim, CA, Mar. 2013 (Optical Society of America, Washington, D.C., 2013).

9. Alan E. Willner, "High-Speed Optical Signal Processing and Its Applications,"**Invited Tutorial**, **IEEE/OSA/SPIE Asia Communications & Photonics Conference & Exhibition (ACP) 2010**, paper ThG1, Shanghai, China, Dec. 2010.

10. Alan E. Willner, "Integrated Photonics for Robust and Reconfigurable Communication Systems," **Invited Tutorial, Conference on Lasers and Electro-Optics Pacific Rim (CLEO PacRim)**, paper 1814, Seoul, Korea, Aug. 2007.

11. A.E. Willner, "How to Present a Technical Talk: Think Outside Your Own Box," **Invited Tutorial,** Student Activities Workshop, **Conference on Lasers and Electro-Optics (CLEO)**, Long Beach, CA, May 2006 (Optical Society of America, Wash., D.C., 2006).

12. Alan E. Willner, "How to Present a Technical Talk: Think Outside Your Own Box," **Invited Tutorial,** Student Activities Workshop, **Conference on Lasers and Electro-Optics (CLEO)**, Baltimore, MD, May 2005 (Optical Society of America, Wash., D.C., 2005).

13. Alan E. Willner, "Physical-Layer Challenges in Future Optical Networks," **Invited Tutorial**, **10th Opto-Electronics and Communications Conference (OECC),** paper P1444, Seoul, Korea, July 2005.

14. A.E. Willner, "How to Present a Technical Talk," **Invited Tutorial,** Student Activities Workshop, **Conference on Lasers and Electro-Optics (CLEO)**, San Francisco, CA, May 2004 (Optical Society of America, Wash., D.C., 2004).

15. Alan E. Willner, "Novel All-Optical Networks," **Invited Tutorial**, **Optical Society of America Annual Meeting,** Rochester, New York, Oct. 2004 (Optical Society of America, Wash., D.C., 2004).

16. Alan E. Willner, "Polarization Control and Monitoring," **Invited Tutorial**, **Conference on Optical Fiber Communications**, Paper WC1, Atlanta, Georgia, Feb. 2003 (Optical Society of America, Wash., D.C., 2003).

17. A.E. Willner, "Optical Communication Systems," **Invited Tutorial,** Cisco Systems, Petaluma, Nov. 2000.

18. Alan E. Willner, "Multi-Channel WDM Fiber-Optic Systems," **Invited Tutorial**, **Optical Society of America Annual Meeting,** paper ThBB1, Dallas, Texas, Oct. 1994 (Optical Society of America, Wash., D.C., 1994).

SHORT COURSES:

1. A.E. Willner, "Background Concepts of Optical Communication Systems," **Invited Short Course, Conference on Optical Fiber Communications**, Course 384, Los Angeles, CA, March 2012 (Optical Society of America, Wash., D.C., 2012). *Repeated in 2013, 2014, 2015, 2016, 2017, 2018, 2019, 2021, 2022, 2023, 2024, 2025, 2026.*

2. A.E. Willner, "Concepts of Optical Communication Systems, " **Invited Short Course, Optica Short Course Webinar,** Oct. 2021.

3. A.E. Willner, "Background Concepts of Optical Communication Systems," **Invited Training Course, IEEE Communications Society**, Los Angeles, CA, Oct. 2017. *Repeated in 4/2018, 4/2019, 10/2019, 4/2020, 10/2020, 4/2021.*

4. A.E. Willner, "Combating and Monitoring Degrading Effects in Non-Static and Reconfigurable Optical Systems," **Invited Short Course, Conference on Optical Fiber Communications**, San Diego, CA, Feb. 1999 (Optical Society of America, Wash., D.C., 1999). *Repeated in 2000, 2001, 2002, 2003, 2004, 2005, 2006, 2007, 2008, 2009, 2010, 2011.*

5. A.E. Willner, "Reconfigurable Multi-Wavelength Optical Systems and Networks," **Invited Short Course, European Conference on Optical Communications**, Munich, Germany, Sept. 2000. *Repeated in 2001.*

6. A.E. Willner, "Optical Fiber Communication Systems," **Invited Short Course, Conf. on Lasers and Electro-Optics (CLEO)**, Course 119, Baltimore, MD, June 1997 (Optical Society of America, Wash., D.C., 1997). *Repeated in 1998, 1999, 2000, 2001, 2002, 2003, 2004, 2005, 2006, 2007, 2008, 2009,2010, 2012.*

7. L. Lunardi and A.E. Willner, "40 Gbit/s Technologies," **Invited Short Course, IEEE Lasers and Electro-Optics Society Annual Meeting**, San Diego, CA, Nov. 2001 (IEEE, Piscataway, NJ, 2001). *Repeated in 2002, 2003.*

8. A.E. Willner, "Optical Fiber Communications: Basic Principles and Wavelength-Division-Multiplexing," **Invited Short Course**, **Society of Photo-Instrumentation Engineers (SPIE) Photonics East,** Nov. 1996, Boston, MA (SPIE, Bellingham, Wash., 1996).

9. A.E. Willner, "Multichannel Multiwavelength Fiber-Optic Communication Systems," **Invited Short Course**, IEEE Military Communications Conference (MILCOM) San Diego, CA, Nov. 1995 (IEEE, Piscataway, NJ, 1995).

10. A.E. Willner, "Optical Telecommunication Systems Engineering," **Invited Short Course**, **Society of Photo-Instrumentation Engineers (SPIE) Photonics East '95**, SC36, Philadelphia, PA (SPIE, Bellingham, Wash., 1995).

11. A.E. Willner, "Wavelength Division Multiplexing," **UCLA Extension Course**, Univ. of California at Los Angeles, 1997. *Repeated in 1998, 1999, 2000, 2001, 2004, 2005.*

12. A.E. Willner, "Optical Communication Systems and Networks," **Short Course**, given to several companies, including: Boeing, Cisco, and Salomon Smith Barney.

REFEREED JOURNAL PAPERS:

1. Wing Ko, Abdulrahman Alhaddad, Amir Minoofar, Narek Karapetyan, Huibin Zhou, Muralekrishnan Ramakrishnan, Xinzhou Su, Zile Jiang, Hongkun Lian, Moshe Tur, Jonathan L. Habif, and Alan E. Willner, "Demonstration of Reconfigurable and Tunable Optical Format Aggregation of Two Independent Channels Using Nonlinear Wave Mixing," **IEEE/Optica Journal of Lightwave Technology**, accepted for publication, 2025.

2. Muralekrishnan Ramakrishnan, Huibin Zhou, Zile Jiang, Xinzhou Su, Yuxiang Duan, Abdulrahman Alhaddad, Wing Ko, Ruoyu Zeng, Yingning Wang, Amir Minoofar, Moshe Tur, and Alan E. Willner, "Demonstration of Simultaneous Mitigation of Turbulence and Misalignment in a Free-Space Mode-Division-Multiplexed Optical Link Using Beam Shaping," **IEEE/Optica Journal of Lightwave Technology**, accepted for publication, 2025.

3. Amir Minoofar, Abdulrahman Alhaddad, Wing Ko, Hongkun Lian, Huibin Zhou, Ahmed Almaiman, Muralekrishnan Ramakrishnan, Narek Karapetyan, Zile Jiang, Murali Annavaram, Moshe Tur, Jonathan L. Habif, and Alan E. Willner, "Reconfigurable Optical Recognition of Independent Data Patterns in a QPSK Data Stream Using Nonlinear Wave Mixing and Time or Wavelength Multiplexing," **IEEE/Optica Journal of Lightwave Technology**, accepted for publication, 2025.

4. Ruoyu Zeng, Xinzhou Su, Yingning Wang, Zile Jiang, Hongkun Lian, Huibin Zhou, Yuxiang Duan, Wing Ko, Muralekrishnan Ramakrishnan, Abdulrahman Alhaddad, Moshe Tur, Demetrios N. Christodoulides, and Alan E. Willner, "Representation of Spatiotemporal Wave Packets With Dynamic Motion on a Modified Poincaré Sphere," **Optics Letters,** vol. **50**, no. 10, pp. 3146-3149, 2025.

5. Yingning Wang, Xinzhou Su, Ruoyu Zeng, Zile Jiang, Huibin Zhou, Abdulrahman Alhaddad, Wing Ko, Yuxiang Duan, Muralekrishnan Ramakrishnan, Yue Zuo, Moshe Tur, and Alan E. Willner, "Demonstration of a Structured Space–Time Wave Packet Having Tailored Range-Dependent Rotation Motions," **Optics Letters,** vol. **50**, no. 8, pp. 2598-2601, 2025.

6. Wing Ko, Abdulrahman Alhaddad, Amir Minoofar, Hongkun Lian, Huibin Zhou, Muralekrishnan Ramakrishnan, Zile Jiang, Xinzhou Su, Moshe Tur, Jonathan L. Habif, and Alan E. Willner, "Demonstration of Reconfigurable and Tunable All-Optical Matrix-Vector Multiplication Using Nonlinear Wave Mixing," **Optics Letters**, vol. **50**, no. 12, pp. 4018-4021, 2025.

   **** Top downloaded article in Optics Letters on June 11, 2025. ****

7. Xinzhou Su, Kaiheng Zou, Yingning Wang, Murat Yessenov, Huibin Zhou, Hao Song, Wing Ko, Ruoyu Zeng, Abdulrahman Alhaddad, Muralekrishnan Ramakrishnan, Yuxiang Duan, Ayman Abouraddy, Moshe Tur, Demetrios Christodoulides, and Alan E. Willner, "Space-Time Wave Packets in Multimode Optical Fibers with Controlled Dynamic Motions and Tunable Group Velocities," **Nature Communications,** vol. **16**, Article number: 2027, 2025.

8. Huibin Zhou, Xinzhou Su, Yuxiang Duan, Yue Zuo, Zile Jiang, Muralekrishnan Ramakrishnan, Jan Tepper, Volker Ziegler, Robert W. Boyd, Moshe Tur, and Alan E. Willner, "Automatic Mitigation of Dynamic Atmospheric Turbulence Using Optical Phase Conjugation for Coherent Free-Space Optical Communications," **Optica,** vol. **12**, no. 2, pp. 158-167, 2025.

9. Narek Karapetyan, Amir Minoofar, Abdulrahman Alhaddad, Wing Ko, Hongkun Lian, Muralekrishnan Ramakrishnan, Huibin Zhou, Moshe Tur, Jonathan Habif, and Alan E. Willner, "Demonstration of Optical De-aggregation of a Single 10-Gbit/s QPSK Signal to Two 5-Gbit/s OOK Signals Using Nonlinear Wave Mixing and Constellation Biasing," **Optics Letters,** vol. **50**, no. 3, pp. 788-791, 2024.

10. Zile Jiang, Muralekrishnan Ramakrishnan, Huibin Zhou, Xinzhou Su, Yuxiang Duan, Hao Song, Ruoyu Zeng, Yingning Wang, Robert Bock, Shlomo Zach, Moshe Tur, and Alan E. Willner, "Experimental Demonstration of Underwater Optical Ranging with Enhanced Accuracy in Scattering Medium Using

REFEREED JOURNAL PAPERS: (CONTINUED)

Multiple Bessel Modes," **IEEE/Optica Journal of Lightwave Technology**, vol. **43**, no. 3, pp. 1123-1129, 2024.

11. Abdulrahman Alhaddad, Amir Minoofar, Wing Ko, Narek Karapetyan, Muralekrishnan Ramakrishnan, Huibin Zhou, Yuxiang Duan, Zile Jiang, Xinzhou Su, Yingning Wang, Ruoyu Zeng, Hao Song, Ahmed Almaiman, Moshe Tur, Jonathan L. Habif, and Alan E. Willner, "Tunable Pattern Recognition of Optical QPSK Data Using Optical Correlation and Direct Detection," **Optics Letters,** vol. **49**, no. 18, pp. 5079-5082, 2024.

12. Ahmed Almaiman, Yinwen Cao, Peicheng Liao, Alan E. Willner, and Moshe Tur, "Optically Delaying a Radio Frequency–Linear Frequency-Modulated (RF-LFM) Pulse Using Kerr Comb Carriers and Off-the-Shelf Concatenation of a Linearly Chirped Fiber Bragg Grating and a Chirped-and-Sampled Fiber Bragg Grating," **Photonics,** vol. **11**, no. 9, Paper number: 11090823, 2024.

13. Amir Minoofar, Abdulrahman Alhaddad, Wing Ko, Narek Karapetyan, Ahmed Almaiman, Huibin Zhou, Muralekrishnan Ramakrishnan, Murali Annavaram, Moshe Tur, Jonathan L. Habif, and Alan E. Willner, "Tunable Optical Matrix Convolution of 20-Gbit/s QPSK 2-D Data with a Kernel Using Optical Wave Mixing," **Optics Letters,** vol. **49**, no. 17, pp. 4899-4902, 2024.

14. Hao Song, Huibin Zhou, Kaiheng Zou, Runzhou Zhang, Xinzhou Su, Kai Pang, Haoqian Song, Yuxiang Duan, Amir Minoofar, Robert Bock, Shlomo Zach, Moshe Tur, and Alan E. Willner, "Free-Space Optical Communication Link using a Single Laguerre-Gaussian Beam with Tunable Radial and Azimuthal Spatial Indices Generated by an Integrated Concentric Circular Antenna Array," **Optics Express**, vol. **32**, no. 19, pp. 33803-33810, 2024.

15. Yuxiang Duan, Huibin Zhou, Zile Jiang, Muralekrishnan Ramakrishnan, Xinzhou Su, Wing Ko, Yue Zuo, Hongkun Lian, Ruoyu Zeng, Yingning Wang, Zixun Zhao, Moshe Tur, and Alan E. Willner, "Demonstration of an 8-Gbit/s Quadrature-Phase-Shift-Keying Coherent Underwater Wireless Optical Communication Link using Coherent Heterodyne Detection under Scattering Conditions," **Optics Letters,** vol. **49**, no. 15, pp. 4397-4400, 2024.

16. Huibin Zhou, Hao Song, Xinzhou Su, Yuxiang Duan, Kaiheng Zou, Runzhou Zhang, Moshe Tur, and Alan E. Willner, "Turbulence Mitigation of 4 Mode-Division-Multiplexed QPSK Channels in a Pilot-Assisted Self-Coherent Free-Space Optical Link Using a PD Array and DSP-Based Channel Demultiplexing," **Optics Letters,** vol. **49**, no. 5, pp. 1209-1212, 2024.

17. Xinzhou Su, Kaiheng Zou, Huibin Zhou, Hao Song, Yingning Wang, Ruoyu Zeng, Zile Jiang, Yuxiang Duan, Maxim Karpov, Tobias J. Kippenberg, Moshe Tur, Demetrios N. Christodoulides, and Alan E. Willner, "Temporally and Longitudinally Tailored Dynamic Space-Time Wave Packets," **Optics Express**, vol. **32**, no. 15, pp. 26653-26666, 2024.

18. Hao Song, Huibin Zhou, Yuxiang Duan, Zile Jiang, Muralekrishanan Ramakrishnan, Wing Ko, Yingning Wang, Xinzhou Su, Kaiheng Zou, Abdulrahman Alhaddad, Ruoyu Zeng, Robert Bock, Moshe Tur, and Alan E. Willner, "Experimental Demonstration of Optical Ranging Through Underwater Scattering using z-dependent Angular Rotation of a Spatially Structured Beam," **Optics Communications,** vol. **557**, article 130335, 2024.

19. Xinzhou Su, Zile Jiang, Yuxiang Duan, Huibin Zhou, Hao Song, Kai Pang, Cong Liu, Kaiheng Zou, Runzhou Zhang, Haoqian Song, Nanzhe Hu, Moshe Tur, and Alan E. Willner, "Adaptive-Optics-Based Turbulence Mitigation in a 400 Gbit/s Free-Space Optical Link by Multiplexing Laguerre–Gaussian Modes Varying both Radial and Azimuthal Spatial Indices," **Optics Letters,** vol. **48**, no. 24, pp. 6452-6455, 2023.

**** Paper selected as Editors' Pick: 6 out of 62 papers in that issue of Optics Letters. ****

REFEREED JOURNAL PAPERS: (CONTINUED)

20. Kaiheng Zou, Kai Pang, Hao Song, Maxim Karpov, Xinzhou Su, Runzhou Zhang, Haoqian Song, Huibin Zhou, Tobias J. Kippenberg, Moshe Tur, and Alan E. Willner, "Space-time Wave Packets with Reduced Divergence and Tunable Group Velocity Generated in Free Space after Multimode Fiber Propagation," **Optics Letters,** vol. **48**, no. 21, pp. 5695-5698, 2023.

21. Huibin Zhou, Xinzhou Su, Yuxiang Duan, Hao Song, Kaiheng Zou, Runzhou Zhang, Haoqian Song, Nanzhe Hu, Moshe Tur, and Alan E. Willner, "Atmospheric Turbulence Strength Distribution along a Propagation Path Probed by Longitudinally Structured Optical Beams," **Nature Communications,** vol. **14**, Article number: 4701, 2023.

22. Amir Minoofar, Narek Karapetyan, Ahmed Almaiman, Huibin Zhou, Hao Song, Kaiheng Zou, Wing Ko, Muralekrishnan Ramakrishnan, Murali Annavaram, Jonathan L. Habif, Moshe Tur, and Alan E. Willner, "Demonstration of Optically-Assisted Reconfigurable Average of Two 20-Gbaud 4-Phase-Encoded Data Channels Using Nonlinear Wave Mixing, " **Optics Letters,** vol. **48**, no. 17, pp. 4617-4620, 2023.

23. Haijun He, Lin Jiang, Yan Pan, Anlin Yi, Xihua Zou, Wei Pan, Alan E. Willner, Xinyu Fan, Zuyuan He, and Lianshan Yan "Integrated Communication and Sensing in an Optical Fibre," **Light: Science & Applications**, vol. **12**, Article number: 25, 2023.

    **** Paper selected by Light: Science & Applications (LSA) as one of the 2023 Top Downloaded Papers ****

24. Huibin Zhou, Yuxiang Duan, Hao Song, Xinzhou Su, Zhe Zhao, Kaiheng Zou, Haoqian Song, Runzhou Zhang, Robert W. Boyd, Moshe Tur, and Alan E. Willner, "Automatic Turbulence Mitigation for Coherent Free-Space Optical Links Using Crystal-Based Phase Conjugation and Fiber-Coupled Data Modulation," **Optics Letters**, vol. **48**, no. 9, pp. 2194-2197, 2023.

    **** Paper selected as Editors' Pick: 5 out of 60 papers in that issue of Optics Letters. ****

25. Hao Song, Kaiheng Zou, Huibin Zhou, Narek Karapetyan, Amir Minoofar, Xinzhou Su, Ahmed Almaiman, Jonathan L. Habif, Moshe Tur, and Alan E. Willner, "Experimental Demonstration of an Optics-Based 4-PSK Half-Adder Using Nonlinear Wave Mixing," **Optics Letters**, vol. **48**, no. 13, pp. 3475-3478, 2023.

26. Haoqian Song, Runzhou Zhang, Huibin Zhou, Kaiheng Zou, Nanzhe Hu, Xinzhou Su, Hao Song, Kai Pang, Yuxiang Duan, Daeyoung Park, Brittany Lynn, Greg Gbur, Aristide Dogariu, Richard J. Watkins, Jerome K. Miller, Eric Johnson, Moshe Tur, and Alan E. Willner, "Investigation of the 2-D Modal Coupling of a Laguerre Gaussian Beam Through the Dynamic Air–Water Interface," **Optics Communications**, vol. **545**, article 129689, 2023.

27. Runzhou Zhang, Kaiheng Zou, Xinzhou Su, Yuxiang Duan, Huibin Zhou, Haoqian Song, Hao Song, Amir Minoofar, Nanzhe Hu, Kai Pang, Robert W. Boyd, Moshe Tur, and Alan E. Willner, "Turbulence-Resilient Differential-Phase-Shift-Keying Free-Space Optical Communications Using Automatic Multi-Mode Optoelectronic Mixing," **Optics Communications**, vol. **534**, article 129330, 2023.

28. Ki Youl Yang, Chinmay Shirpurkar, Alexander D. White, Jizhao Zang, Lin Chang, Farshid Ashtiani, Melissa A. Guidry, Daniil M. Lukin, Srinivas V. Pericherla, Joshua Yang, Hyounghan Kwon, Jesse Lu, Geun Ho Ahn, Kasper Van Gasse, Yan Jin, Su-Peng Yu, Travis C. Briles, Jordan R. Stone, David R. Carlson, Hao Song, Kaiheng Zou, Huibin Zhou, Kai Pang, Han Hao, Lawrence Trask, Mingxiao Li, Andy Netherton, Lior Rechtman, Jeffery S. Stone, Jinhee L. Skarda, Logan Su, Dries Vercruysse, Jean-Philippe W. MacLean, Shahriar Aghaeimeibodi, Ming-Jun Li, David A. B. Miller, Dan M. Marom, Alan E. Willner, John E. Bowers, Scott B. Papp, Peter J. Delfyett, Firooz Aflatouni and Jelena Vučković, "Multi-Dimensional Data Transmission using Inverse-Designed Silicon Photonics and Microcombs," **Nature Communications**, vol. **13**, Article number: 7862, 2022.

29. Amir Minoofar, Kaiheng Zou, Kai Pang, Hao Song, Maxim Karpov, Murat Yessenov, Zhe Zhao, Haoqian Song, Huibin Zhou, Xinzhou Su, Tobias J. Kippenberg, Ayman F. Abouraddy, Moshe Tur, and Alan E.

REFEREED JOURNAL PAPERS: (CONTINUED)

Willner, "Generation Of OAM-Carrying Space-Time Wave Packets with Time-Dependent Beam Radii Using a Coherent Combination of Multiple LG Modes on Multiple Frequencies," **Optics Express**, vol. **30**, no. 35, pp. 45267-45278, 2022.

30. Kaiheng Zou, Kai Pang, Hao Song, Jintao Fan, Zhe Zhao, Haoqian Song, Runzhou Zhang, Huibin Zhou, Amir Minoofar, Cong Liu, Xinzhou Su, Nanzhe Hu, Andrew McClung, Mahsa Torfeh, Amir Arbabi, Moshe Tur, and Alan E. Willner, "High-Capacity Free-Space Optical Communications Using Wavelength- and Mode-Division-Multiplexing in the Mid-Infrared Region," **Nature Communications**, vol. **13**, Article number: 7662, 2022.

31. Kaiheng Zou, Xinzhou Su, Murat Yessenov, Kai Pang, Narek Karapetyan, Maxim Karpov, Hao Song, Runzhou Zhang, Huibin Zhou, Tobias J. Kippenberg, Moshe Tur, Ayman F. Abouraddy, and Alan E. Willner, "Tunability of Space-Time Wave Packet Carrying Tunable and Dynamically Changing OAM Value," **Optics Letters**, vol. **47**, no. 21, pp. 5751-5754, 2022.

32. Hao Song, Runzhou Zhang, Huibin Zhou, Xinzhou Su, Kaiheng Zou, Yuxiang Duan, Narek Karapetyan, Haoqian Song, Kai Pang, Nanzhe Hu, Amir Minoofar, Moshe Tur, and Alan E. Willner, "Turbulence-Resilient Pilot-Assisted Self-coherent Free-Space Optical Communications using a Photodetector Array for Bandwidth Enhancement," **Optics Letters**, vol. **47**, no. 21, pp. 5723-5726, 2022.

33. Nanzhe Hu, Huibin Zhou, Runzhou Zhang, Haoqian Song, Kai Pang, Kaiheng Zou, Hao Song, Xinzhou Su, Cong Liu, Brittany Lynn, Moshe Tur, and Alan E. Willner, "Experimental Demonstration of A "Pin-like" Low-Divergence Beam in a 1-Gbit/s OOK FSO Link Using a Limited-Size Receiver Aperture at Various Propagation Distances," **Optics Letters**, vol. **47**, no. 16, pp. 4215-4218, 2022.

34. Xinzhou Su, Runzhou Zhang, Zhe Zhao, Hao Song, Amir Minoofar, Nanzhe Hu, Huibin Zhou, Kaiheng Zou, Kai Pang, Haoqian Song, Brittany Lynn, Shlomo Zach, Moshe Tur, Andreas F Molisch, Hirofumi Sasaki, Doohwan Lee, and Alan E Willner, "Receiver aperture and multipath effects on power loss and modal crosstalk in a THz wireless link using orbital-angular-momentum multiplexing," **Scientific Reports**, vol. **12**, no. 1, pp. 1-15, 2022.

35. Zi Wang, Yahui Xiao, Kun Liao, Tiantian Li, Hao Song, Haoshuo Chen, S. M. Zia Uddin, Dun Mao, Feifan Wang, Zhiping Zhou, Bo Yuan, Wei Jiang, Nicolas K. Fontaine, Amit Agrawal, Alan E. Willner, Xiaoyong Hu, and Tingyi Gu, "Metasurface on Integrate Photonic Platform: From Mode Converters to Machine Learning," **Nanophotonics**, vol. **11**, no. 16, pp. 3531-3546, 2022.

36. Kai Pang, Kaiheng Zou, Zhe Zhao, Hao Song, Yiyu Zhou, Maxim Karpov, Murat Yessenov, Abbas Shiri, Haoqian Song, Runzhou Zhang, Huibin Zhou, Xinzhou Su, Nanzhe Hu, Amir Minoofar, Tobias J. Kippenberg, Robert W. Boyd, Ayman F. Abouraddy, Moshe Tur, and Alan E. Willner, "Experimental Demonstration of Dynamic Spatiotemporal Structured Beams that Simultaneously Exhibit Two Orbital Angular Momenta by Combining Multiple Frequency Lines, Each Carrying Multiple Laguerre–Gaussian Modes," **Optics Letters**, vol. **47**, no. 16, pp. 4044-4047, 2022.

37. Fatemeh Alishahi, Amir Minoofar, Ahmad Fallahpour, Kaiheng Zou, Narek Karapetyan, Huibin Zhou, Jonathan L Habif, Moshe Tur, Alan E. Willner, "Experimental Demonstration of Remotely Controlled Tunable Optical Correlators of 10–50 Gbaud QPSK Channels Using Linear and Nonlinear Components and Laser-Delivered Powers," **Optics Communications**, vol. **523**, Paper number: 128698, 2022.

38. Nanzhe Hu, Haoqian Song, Runzhou Zhang, Huibin Zhou, Cong Liu, Xinzhou Su, Hao Song, Kai Pang, Kaiheng Zou, Brittany Lynn, Moshe Tur, and Alan E. Willner, "Demonstration of Turbulence Mitigation in a 200-Gbit/s Orbital-Angular-Momentum Multiplexed Free-Space Optical Link using Simple Power Measurements for Determining the Modal Crosstalk Matrix," **Optics Letters**, vol. **47**, no. 14, pp. 3539-3542, 2022.

***Paper selected as "Editors' Pick", 5 out of 61 papers in that issue of Optics Letters ***

REFEREED JOURNAL PAPERS: (CONTINUED)

39. Huibin Zhou, Xinzhou Su, Amir Minoofar, Runzhou Zhang, Kaiheng Zou, Hao Song, Kai Pang, Haoqian Song, Nanzhe Hu, Zhe Zhao, Ahmed Almaiman, Shlomo Zach, Moshe Tur, Andreas F. Molisch, Hirofumi Sasaki, Doohwan Lee, and Alan E. Willner, "Utilizing Multiplexing of Structured THz Beams Carrying Orbital-Angular-Momentum for High-Capacity Communications," **Optics Express,** vol. **30**, no. 14, pp. 25418-25432, 2022.

40. Kaiheng Zou, Hao Song, Zhe Zhao, Kai Pang, Amir Minoofar, Xinzhou Su, Huibin Zhou, Runzhou Zhang, Haoqian Song, Nanzhe Hu, Cong Liu, Moshe Tur, Alan E. Willner, "Space–Time Light Sheet with a Controllable Group Velocity and Reduced Diffraction by Combining Multiple Frequencies Each Carrying Multiple Laguerre-Gaussian Modes," **Optics Communications**, vol. **520**, Paper number: 128477, 2022.

41. Kai Pang, Kaiheng Zou, Hao Song, Maxim Karpov, Murat Yessenov, Zhe Zhao, Amir Minoofar, Runzhou Zhang, Haoqian Song, Huibin Zhou, Xinzhou Su, Nanzhe Hu, Tobias J. Kippenberg, Ayman F. Abouraddy, Moshe Tur, and Alan E. Willner, "Synthesis of Near-Diffraction-Free Orbital-Angular-Momentum Space-Time Wave Packets Having a Controllable Group Velocity Using Frequency Comb," **Optics Express**, vol. **30**, no. 10, pp. 16712-16724, 2022.

42. Maria Solyanik-Gorgone, Jiachi Ye, Mario Miscuglio, Andrei Afanasev, Alan E. Willner, and Volker J. Sorger, "Quantifying Information via Shannon Entropy in Spatially Structured Optical Beams," **Research**, vol. **2021**, Article number: 9780760, 2021.

43. Kai Pang, Kaiheng Zou, Hao Song, Zhe Zhao, Amir Minoofar, Runzhou Zhang, Haoqian Song, Huibin Zhou, Xinzhou Su, Cong Liu, Nanzhe Hu, Moshe Tur, and Alan E. Willner, "Simulation of Near-Diffraction- and Near-Dispersion-Free OAM Pulses with Controllable Group Velocity by Combining Multiple Frequencies, Each Carrying a Bessel Mode," **Optics Letters**, vol. **46**, no. 18, pp. 4678-4681, 2021.

44. Hao Song, Huibin Zhou, Kaiheng Zou, Runzhou Zhang, Kai Pang, Haoqian Song, Amir Minoofar, Xinzhou Su, Nanzhe Hu, Cong Liu, Robert Bock, Shlomo Zach, Moshe Tur, and Alan E. Willner, "Demonstration of Generating a 100 Gbit/S Orbital-Angular-Momentum Beam with a Tunable Mode Order Over a Range of Wavelengths Using an Integrated Broadband Pixel-Array Structure," **Optics Letters**, vol. **46**, no. 19, pp. 4765-4768, 2021.

45. Ahmad Fallahpour, Amir Minoofar, Fatemeh Alishahi, Kaiheng Zou, Samer Idres, Hossein Hashemi, Jonathan Habif, Moshe Tur, and Alan E. Willner, "Experimental Demonstration of Remotely Powered, Controlled, and Monitored Optical Switching based on Laser-Delivered Signals," **Optics Letters**, vol. **46**, no. 18, pp. 4589-4592, 2021.

    **** Paper selected as Editors' Pick: 5 out of 68 papers in that issue of Optics Letters. ****

46. Hao Song, Xinzhou Su, Haoqian Song, Runzhou Zhang, Zhe Zhao, Nanzhe Hu, Kaiheng Zou, Huibin Zhou, Kai Pang, Cong Liu, Karapet Manukyan, Ahmed Almaiman, Andreas F. Molisch, Robert W. Boyd, Shlomo Zach, Moshe Tur, Alan E. Willner, "Simultaneous Turbulence Mitigation and Channel Demultiplexing Using a Single Multi-Plane Light Convertor for a Free-Space Optical Link With Two 100-Gbit/S OAM Channels," **Optics Communications**, vol. **501**, Article number: 127359, 2021.

47. Huibin Zhou, Hao Song, Zhe Zhao, Runzhou Zhang, Haoqian Song, Kai Pang, Kaiheng Zou, Cong Liu, Xinzhou Su, Nanzhe Hu, Robert Bock, Brittany Lynn, Moshe Tur, and Alan E. Willner, "Modal Properties of a Beam Carrying OAM Generated by a Circular Array of Multiple Ring-Resonator Emitters," **Optics Letters**, vol. **46**, no. 19, pp. 4722-4725, 2021.

48. Runzhou Zhang, Nanzhe Hu, Huibin Zhou, Kaiheng Zou, Xinzhou Su, Yiyu Zhou, Haoqian Song, Kai Pang, Hao Song, Amir Minoofar, Zhe Zhao, Cong Liu, Karapet Manukyan, Ahmed Almaiman, Brittany Lynn, Robert W. Boyd, Moshe Tur, Alan E. Willner, "Turbulence-Resilient Pilot-Assisted Self-Coherent Free-

REFEREED JOURNAL PAPERS: (CONTINUED)

Space Optical Communications Using Automatic Optoelectronic Mixing of Many Modes," **Nature Photonics**, vol. **15**, pp. 743-750, 2021.

49. Kai Pang, M. Zahirul Alam, Yiyu ZhouYiyu Zhou, Cong Liu, Orad Reshef, Karapet Manukyan, Matt Voegtle, Anuj Pennathur, Cindy Tseng, Xinzhou Su, Hao Song, Zhe Zhao, Runzhou Zhang, Haoqian Song, Nanzhe Hu, Ahmed Almaiman, Jahan M. Dawlaty, Robert W. Boyd, Moshe Tur, and Alan E. Willner, "Adiabatic Frequency Conversion Using a Time-Varying Epsilon-Near-Zero Metasurface," **Nano Letters**, vol. **21**, no. 14, pp. 5907-5913, 2021.

50. Cong Liu, M. Zahirul Alam, Kai Pang, Karapet Manukyan, Joshua R. Hendrickson, Evan M. Smith, Yiyu Zhou, Orad Reshef, Hao Song, Runzhou Zhang, Haoqian Song, Fatemeh Alishahi, Ahmad Fallahpour, Ahmed Almaiman, Robert W. Boyd, Moshe Tur, and Alan E. Willner, "Tunable Doppler shift using a time-varying epsilon-near-zero thin film near 1550 nm," **Optics Letters**, vol. **46**, no. 14, pp. 3444-3447, 2021.

**** Paper selected as Editors' Pick: 4 out of 43 papers in that issue of Optics Letters. ****

51. Yiyu Zhou, Boris Braverman, Alexander Fyffe, Runzhou Zhang, Jiapeng Zhao, Alan E. Willner, Zhimin Shi, and Robert W. Boyd, "High-fidelity Spatial Mode Transmission Through a 1-km-long Multimode Fiber via Vectorial Time Reversal," **Nature Communications**, vol. **12**, Article number: 1866, 2021.

52. Yiyu Zhou, Jiapeng Zhao, Boris Braverman, Kai Pang, Runzhou Zhang, Alan E. Willner, Zhimin Shi, and Robert W. Boyd, "Multiprobe Time Reversal for High-Fidelity Vortex-Mode-Division Multiplexing Over a Turbulent Free-Space Link," **Physical Review Applied,** vol. **8**, Article number: 034011, 2021.

53. Ahmed Almaiman, Hao Song, Amir Minoofar, Haoqian Song, Runzhou Zhang, Xinzhou Su, Kaiheng Zou, Kai Pang, Cong Liu, Peicheng Liao, Nanzhe Hu, Zhe Zhao, Shlomo Zach, Moshe Tur, and Alan E. Willner, "Demonstration of QPSK Data Correlation and Equalization Using a Tunable Optical Tapped Delay Line Based on Orbital Angular Momentum Mode Delays," **Optics Communications,** vol. **503**, Article number: 127438, 2021.

54. Cong Liu, M. Zahirul Alam, Kai Pang, Karapet Manukyan, Orad Reshef, Yiyu Zhou, Saumya Choudhary, Joel Patrow, Anuj Pennathurs, Hao Song, Zhe Zhao, Runzhou Zhang, Fatemeh Alishahi, Ahmad Fallahpour, Yinwen Cao, Ahmed Almaiman, Jahan M. Dawlaty, Moshe Tur, Robert W. Boyd, and Alan E. Willner, "Photon Acceleration Using a Time-Varying Epsilon-near-Zero Metasurface," **ACS Photonics**, vol. **8**, no. 3, pp. 716-720, 2021.

55. Kaiheng Zou, Peicheng Liao, Huibin Zhou, Ahmad Fallahpour, Amir Minoofar, Ahmed Almaiman, Fatemeh Alishahi, Moshe Tur, and Alan E. Willner, "Tunable Optical Second-order Volterra Nonlinear Filter Using Wave Mixing and Delays to Equalize a 10–20 Gbaud 4-APSK Channel," **Optics Letters**, vol. **46**, no. 6, pp. 1325-1328, 2021.

56. Jing Du, Runzhou Zhang, Zhe Zhao, Guodong Xie, Long Li, Haoqian Song, Kai Pang, Cong Liu, Hao Song, Ahmed Almaiman, Brittany Lynn, Moshe Tur, and Alan E. Willner, "Single-pixel Identification of 2-dimensional Objects by Using Complex Laguerre–Gaussian Spectrum Containing Both Azimuthal and Radial Modal Indices," **Optics Communications**, vol. **481**, Article number: 126557, 2021.

57. Paul McManamon, Armand Vedadi, Alan Willner, Ohad Harlev, Dipayan Choudhary, and Nick Montifiore, "High Capacity, and Access Rate, Data Storage Using Laser Communications," **SPIE Optical Engineering**, vol. **60**, Article number: 015105, 2021.

**** Paper selected by the editors as the cover image of this issue of Optical Engineering. ****

58. Zhe Zhao, Runzhou Zhang, Hao Song, Kai Pang, Ahmed Almaiman, Huibin Zhou, Haoqian Song, Cong Liu, Nanzhe Hu, Xinzhou Su, Amir Minoofar, Hirofumi Sasaki, Doohwan Lee, Moshe Tur, Andreas F. Molisch,

REFEREED JOURNAL PAPERS: (CONTINUED)

and Alan E. Willner, "Modal Coupling and Crosstalk due to Turbulence and Divergence on Free Space THz Links Using Multiple Orbital Angular Momentum Beams," **Scientific Reports**, vol. **11**, Article number: 2110, 2021.

59. Zhe Zhao, Hao Song, Runzhou Zhang, Kai Pang, Cong Liu, Haoqian Song, Ahmed Almaiman, Karapet Manukyan, Huibin Zhou, Brittany Lynn, Robert W. Boyd, Moshe Tur, and Alan E. Willner, "Dynamic Spatiotemporal Beams that Combine Two Independent and Controllable Orbital-Angular-Momenta Using Multiple Optical-Frequency-Comb Lines," **Nature Communications**, vol. **11**, Article number: 4099, 2020.

60. Zhewei Zhang, Kaiheng Zou, Huolei Wang, Peicheng Liao, Naresh Satyan, George Rakuljic, Alan E. Willner, and Amnon Yariv, "High-speed Coherent Optical Communication with Isolator-free Heterogeneous Si/III-V Lasers," **IEEE/OSA Journal of Lightwave Technology**, vol. **38**, no. 23, pp. 6584-6590, 2020.

61. Yinwen Cao, Ahmad Fallahpour, Kaiheng Zou, Huibin Zhou, Ahmed Almaiman, Peicheng Liao, Fatemeh Alishahi, Karapet Manukyan, Moshe Tur, and Alan E. Willner, "Tunable Optical Single-Sideband Generation for OOK and PAM4 Data Channels Using an Optical Frequency Comb and Nonlinear Wave-Mixing," **Optics Letters**, vol. **45**, no. 22, pp. 6294-6297, 2020.

62. Kai Pang, Haoqian Song, Xinzhou Su, Kaiheng Zou, Zhe Zhao, Hao Song, Ahmed Almaiman, Runzhou Zhang, Cong Liu, Nanzhe Hu, Shlomo Zach, Nadav Cohen, Brittany Lynn, Andreas F. Molisch, Robert W. Boyd, Moshe Tur, and Alan E. Willner, "Experimental Mitigation of the Effects of the Limited-Size Aperture or Misalignment by Transmitting Each of Four Data Channels on Multiple Laguerre-Gaussian Modes in a 400-Gbit/s Free-Space Link," **Optics Letters**, vol. **45**, no. 22, pp. 6310-6313, 2020.

**** Paper selected as Editors' Pick: 5 out of 57 papers in that issue of Optics Letters. ****

63. Ahmad Fallahpour, Fatemeh Alishahi, Amir Minoofar, Kaiheng Zou, Ahmed Almaiman, Peicheng Liao, Hubin Zhou, Moshe Tur, and Alan E. Willner, "16-QAM Probabilistic Constellation Shaping by Adaptively Modifying the Distribution of Transmitted Symbols Based on Errors at the Receiver," **Optics Letters**, vol. **45**, no. 18, pp. 5283-5286, 2020.

64. Long Li, Haoqian Song, Runzhou Zhang, Zhe Zhao, Cong Liu, Kai Pang, Hao Song, Jing Du, Ari N. Willner, Ahmed Almaiman, Brittany Lynn, Robert Bock, Moshe Tur, and Alan E. Willner, "Increasing System Tolerance to Turbulence in a 100-Gbit/s QPSK Free-Space Optical Link Using Both Mode and Space Diversity," **Optics Communications**, vol. **480**, pp. 126488, 2020.

65. Runzhou Zhang, Hao Song, Zhe Zhao, Haoqian Song, Jing Du, Cong Liu, Kai Pang, Long Li, Huibin Zhou, Ari N. Willner, Ahmed Almaiman, Yiyu Zhou, Robert W. Boyd, Brittany Lynn, Robert Bock, Moshe Tur, and Alan E. Willner, "Simultaneous Turbulence Mitigation and Channel Demultiplexing for Two 100 Gbit/s Orbital-Angular-Momentum Multiplexed Beams by Adaptive Wavefront Shaping and Diffusing," **Optics Letters**, vol. **45**, no. 3, pp. 702-705, 2020.

**** #3 downloaded article in Optics Letters for a few days in Jan. 2020. ****

66. Peicheng Liao, Kaiheng Zou, Huibin Zhou, Ahmad Fallahpour, Nanzhe Hu, Yinwen Cao, Ahmed Almaiman, Fatemeh Alishahi, Changjing Bao, Moshe Tur, and Alan E. Willner, "Flexible Spectrum Sharing of Two Asynchronous QAM Signals Using Power Division Multiplexing," **Optics Letters**, vol. **45**, no. 5, pp. 1176-1179, 2020.

67. Ahmed Almaiman, Yinwen Cao, Amirhossein Mohajerin-Ariaei, Fatemeh Alishahi, Ahmad Fallahpour, Dmitry Starodubov, Kaiheng Zou, Peicheng Liao, Changjing Bao, Shlomo Zach, Nadav Cohen, Moshe Tur, and Alan E. Willner, "Continuous Delay Tunability Using a Combination of Three Types of Fiber Bragg

REFEREED JOURNAL PAPERS: (CONTINUED)

Gratings, Wavelength Conversion, and Wavelength Multicasting with a Frequency Comb," **Optics Communications**, vol. **464**, pp. 125431, 2020.

68. Kaiheng Zou, Zhewei Zhang, Peicheng Liao, Huolei Wang, Yinwen Cao, Ahmed Almaiman, Ahmad Fallahpour, Fatemeh Alishahi, Naresh Satyan, George Rakuljic, Moshe Tur, Amnon Yariv, and Alan E. Willner, "Higher-order QAM Data Transmission Using a High-Coherence Hybrid Si/III-V Semiconductor Laser," **Optics Letters**, vol. **45**, no. 6, pp. 1499-1502, 2020.

69. Kaiheng Zou, Peicheng Liao, Yinwen Cao, Arne Kordts, Ahmed Almaiman, Maxim Karpov, Martin Hubert Peter Pfeiffer, Fatemeh Alishahi, Ahmad Fallahpour, Moshe Tur, Tobias J. Kippenberg, and Alan E. Willner, "Kramers-Kronig Detection of Four 20-Gbaud 16-QAM Channels Using Kerr Combs for Shared Phase Estimation," **Optics Letters**, vol. **45**, no. 7, pp. 1794-1797, 2020.

70. Yiyu Zhou, M. Zahirul Alam, Mohammad Karimi, Jeremy Upham, Orad Reshef, Cong Liu, Alan E. Willner, and Robert W. Boyd, "Broadband Frequency Translation Through Time Refraction in an Epsilon-Near-Zero Material," **Nature Communications**, vol. **11**, article number: 2180, 2020.

**** Selected as a "Highly Cited Paper" by Web of Science in the Physics category (top 1% in citations amongst physics publications). ****

71. Jiapeng Zhao, Yiyu Zhou, Boris Braverman, Cong Liu, Kai Pang, Nicholas K. Steinhoff, Glenn A. Tyler, Alan E. Willner, and Robert W. Boyd, "Performance of Real-Time Adaptive Optics Compensation in a Turbulent Channel with High-Dimensional Spatial-Mode Encoding," **Optics Express**, vol. **28**, no. 10, pp. 15376-15391, 2020.

72. Runzhou Zhang, Hao Song, Haoqian Song, Zhe Zhao, Giovanni Milione, Kai Pang, Jing Du, Long Li, Kaiheng Zou, Huibin Zhou, Cong Liu, Karapet Manukyan, Nanzhe Hu, Ahmed Almaiman, Jeffery Stone, Ming-Jun Li, Brittany Lynn, Robert W. Boyd, Moshe Tur, and Alan E. Willner, "Utilizing Adaptive Optics to Mitigate Intra-Modal-Group Power Coupling of Graded-index Few-Mode Fiber in a 200-Gbit/s Mode-Division-Multiplexed Link," **Optics Letters**, vol. **45**, no. 13, pp. 3577-3580, 2020.

73. Haoqian Song, Long Li, Kai Pang, Runzhou Zhang, Kaiheng Zou, Zhe Zhao, Jing Du, Hao Song, Cong Liu, Yinwen Cao, Ari N. Willner, Ahmed Almaiman, Robert Bock, Brittany Lynn, Moshe Tur, and Alan E. Willner, "Demonstration of Using Two Aperture Pairs Combined with Multiple-Mode Receivers and MIMO Signal Processing for Enhanced Tolerance to Turbulence and Misalignment in a 10 Gbit/s QPSK FSO Link," **Optics Letters**, vol. **45**, no. 11, pp. 3042-3045, 2020.

74. Ahmed Almaiman, Haoqian Song, Kai Pang, Runzhou Zhang, Long Li, Zhe Zhao, Hao Song, Cong Liu, Karapet Manukyan, Kaiheng Zou, Shlomo Zach, Nadav Cohen, Moshe Tur, and Alan E. Willner, "Demonstrating the Use of OAM Modes to Facilitate the Networking Functions of Carrying Channel Header Information and Orthogonal Channel Coding," **Optics Letters**, vol. **45**, no. 16, pp. 4381-4384, 2020.

75. Hao Song, Zhe Zhao, Runzhou Zhang, Haoqian Song, Huibin Zhou, Kai Pang, Jing Du, Long Li, Cong Liu, Xinzhou Su, Ahmed Almaiman, Robert Bock, Moshe Tur, and Alan E. Willner, "Utilizing Phase Delays of an Integrated Pixel-array Structure to Generate Orbital-Angular-Momentum Beams with Tunable Orders and Broad Bandwidth," **Optics Letters**, vol. **45**, no. 15, pp. 4144-4147, 2020.

76. Haoqian Song, Ahmed Almaiman, Hao Song, Zhe Zhao, Runzhou Zhang, Kai Pang, Cong Liu, Long Li, Karapet Manukyan, Shlomo Zach, Nadav Cohen, Moshe Tur, and Alan E. Willner, " 'Hiding' a Low-Intensity 50 Gbit/s QPSK Free-Space OAM Beam Using an Orthogonal Coaxial High-Intensity 50 Gbit/s QPSK Beam," **Applied Optics**, vol. **59**, no. 24, pp. 7448-7454, 2020.

REFEREED JOURNAL PAPERS: (CONTINUED)

77. Ahmad Fallahpour, Fatemeh Alishahi, Ahmed Almaiman, Yinwen Cao, Amirhossein Mohajerin-Ariaei, Peicheng Liao, Cong Liu, Kaiheng Zou, Carsten Langrock, Martin Fejer, Moshe Tur, and Alan E. Willner, "Demonstration of Wavelength Tunable Optical Modulation Format Conversion from 20 and 30 Gbit/s QPSK to PAM4 using Nonlinear Wave Mixing," **Optics Communications**, vol. **459**, pp. 124871, 2020.

78. Long Li, Runzhou Zhang, Peicheng Liao, Yinwen Cao, Haoqian Song, Yifan Zhao, Jing Du, Zhe Zhao, Cong Liu, Kai Pang, Hao Song, Ahmed Almaiman, Dmitry Starodubov, Brittany Lynn, Robert Bock, Moshe Tur, Andreas F Molisch, Alan E. Willner, "Mitigation for Turbulence Effects in a 40-Gbit/s Orbital-Angular-Momentum-Multiplexed Free-Space Optical Link between a Ground Station and a Retro-Reflecting UAV using MIMO Equalization," **Optics Letters**, vol. **44**, no. 21, pp. 5181-5184, 2019.

    **** Paper selected as Editors' Pick: 6 out of 73 papers in that issue of Optics Letters. ****

79. Yuhao Guo, Zeinab Jafari, Lijuan Xu, Changjing Bao, Peicheng Liao, Guifang Li, Anuradha M Agarwal, Lionel C Kimerling, Jurgen Michel, Alan E Willner, and Lin Zhang, "Ultra-flat Dispersion in an Integrated Waveguide with Five and Six Zero-dispersion Wavelengths for Mid-infrared Photonics," **Photonics Research**, vol. **7**, no. 11, pp. 1279-1286, 2019.

80. Ahmad Fallahpour, Fatemeh Alishahi, Yinwen Cao, Amirhossein Mohajerin-Ariaei, Ahmed Almaiman, Peicheng Liao, Changjing Bao, Morteza Ziyadi, Bishara Shamee, Joseph Touch, Moshe Tur, and Alan Willner, "Experimental Demonstration of Tunable De-aggregation from 16-QAM to 4-PAM for Two Wavelength Multiplexed Channels using Wave Mixing in a Single Nonlinear Element to Map Constellation onto Axes," **Optics Communications**, vol. **451**, pp. 74-79, 2019.

81. Long Li, Runzhou Zhang, Peicheng Liao, Hao Song, Kaiheng Zou, Guodong Xie, Zhe Zhao, Cong Liu, Haoqian Song, Kai Pang, Ari N Willner, Ahmed Almaiman, Dmitry Starodubov, Brittany Lynn, Robert Bock, Moshe Tur, and Alan E Willner, "Limited-size Aperture Effects in an Orbital-angular-momentum-multiplexed Free-space Optical Data Link between a Ground Station and a Retro-reflecting UAV," **Optics Communications**, vol. **450**, pp. 241-245, 2019.

82. Yiyu Zhou, Mohammad Mirhosseini, Stone Oliver, Jiapeng Zhao, Seyed Mohammad Hashemi Rafsanjani, Martin P.J. Lavery, Alan E. Willner, Robert W. Boyd, "Using All Transverse Degrees of Freedom in Quantum Communications based on a Generic Mode Sorter," **Optics Express**, vol. **27**, no. 7, pp. 10383-10394, 2019.

83. Changjing Bao, Peicheng Liao, Arne Kordts, Lin Zhang, Andrey Matsko, Maxim Karpov, Martin H. P. Pfeiffer, Guodong Xie, Yinwen Cao, Ahmed Almaiman, Moshe Tur, Tobias J. Kippenberg, and Alan E. Willner, "Orthogonally Polarized Frequency Comb Generation from a Kerr Comb via Cross-phase Modulation," **Optics Letters**, vol. **44**, no. 6, pp. 1472-1475, 2019.

    **** Paper selected as Editors' Pick: 7 out of 60 papers in that issue of Optics Letters. ****

84. Fatemeh Alishahi, Ahmad Fallahpour, Amirhossein Mohajerin-Ariaei, Yinwen Cao, Arne Kordts, Martin Hubert Peter Pfeiffer, Maxim Karpov, Ahmed Almaiman, Peicheng Liao, Kaiheng Zou, Cong Liu, Ari N. Willner, Moshe Tur, Tobias J. Kippenberg, and Alan E. Willner, "Reconfigurable Optical Generation of Nine Nyquist WDM Channels with Sinc-shaped Temporal Pulse Trains using a Single Microresonator-based Kerr Frequency Comb," **Optics Letters**, vol. **44**, no. 7, pp. 1852-1855, 2019.

85. Runzhou Zhang, Long Li, Zhe Zhao, Guodong Xie, Peicheng Liao, Hao Song, Cong Liu, Haoqian Song, Kai Pang, Ari N. Willner, Giovanni Millione, Robert Bock, Moshe Tur, and Alan E. Willner, "A Coherent Optical Wireless Communication Link Employing Orbital-Angular-Momentum Multiplexing in a Ballistic and Diffusive Scattering Medium," **Optics Letters**, vol. **44**, no. 3, pp. 691-694, 2019.

REFEREED JOURNAL PAPERS: (CONTINUED)

86. Cong Liu, Yongxiong Ren, Jiapeng Zhao, Mohammad Mirhosseini, Seyed Mohammad Hashemi Rafsanjani, Guodong Xie, Kai Pang, Haoqian Song, Zhe Zhao, Zhe Wang, Long Li, Joshua C. Bienfang, Alan Migdall, Todd A. Brun, Moshe Tur, Robert W. Boyd, and Alan E. Willner, "Switchable Detector Array Scheme to Reduce the Effect of Single-Photon Detector's Deadtime in a Multi-bit/photon Quantum Link," **Optics Communications**, vol. **441**, pp. 132-137, 2019.

87. Harshil Dave, Peicheng Liao, Stewart T. M. Fryslie, Zihe Gao, Bradley J. Thompson, Alan E. Willner, and Kent D. Choquette, "36 Gb/s Error Free Modulation of 850nm Monolithic Injection Locked VCSEL Arrays," **IEEE Photonics Technology Letters**, vol. **31**, no. 2, pp. 173-176, 2019.

88. Ari N. Willner, Peicheng Liao, Kaiheng Zou, Yinwen Cao, Arne Kordts, Maxim Karpov, Martin H. P. Pfeiffer, Ahmed Almaiman, Ahmad Fallahpour, Fatemeh Alishahi, Karapet Manukyan, Moshe Tur, Tobias J. Kippenberg, and Alan E. Willner, "Scalable and Reconfigurable Optical Tapped-Delay-Line for Multichannel Equalization and Correlation Using Nonlinear Wave Mixing and a Kerr Frequency Comb," **Optics Letters**, vol. **43**, no. 22, pp. 5563-5566, 2018.

89. Yinwen Cao, Kaiheng Zou, Peicheng Liao, Ahmed Almaiman, Ahmad Fallahpour, Fatemeh Alishahi, Amirhossein Mohajerin-Ariaei, Changjing Bao, Ari N. Willner, Dmitry Starodubov, Moshe Tur, and Alan E. Willner, "Performance Enhancement of an Optical High-Order QAM Channel by Adding Correlated Data to Robust Neighboring BPSK or QPSK Channels," **Optics Letters**, vol. **43**, no. 23, pp. 5697-5700, 2018.

90. Yiyu Zhou, Jiapeng Zhao, Zhimin Shi, Seyed Mohammad Hashemi Rafsanjani, Mohammad Mirhosseini, Ziyi Zhu, Alan E. Willner, and Robert W. Boyd, "Hermite–Gaussian Mode Sorter," **Optics Letters**, vol. **43**, no. 21, pp. 5263-5266, 2018.

91. Kai Pang, Cong Liu, Guodong Xie, Yongxiong Ren, Zhe Zhao, Runzhou Zhang, Yinwen Cao, Jiapeng Zhao, Haoqian Song, Hao Song, Long Li, Ari N. Willner, Moshe Tur, Robert W. Boyd, and Alan E. Willner, "Demonstration of a 10 Mbit/s Quantum Communication Link by Encoding Data on Two Laguerre–Gaussian Modes with Different Radial Indices," **Optics Letters**, vol. **43**, no. 22, pp. 5639-5642, 2018.

92. Ahmed Almaiman, Zhe Zhao, Yinwen Cao, Guodong Xie, Amirhossein Mohajerin-Ariaei, Fatemeh Alishahi, Peicheng Liao, Changjing Bao, Ahmad Fallahpour, Bishara Shamee, Youichi Akasaka, Shlomo Zach, Nadav Cohen, Moshe Tur, and Alan E. Willner, "Experimental Utilization of Repeated Spatial-Mode Shifting for Achieving Discrete Delays in a Free-Space Recirculating Loop," **Optics Letters**, vol. **43**, no. 21, pp. 5395-5398, 2018.

93. Kai Pang, Haoqian Song, Zhe Zhao, Runzhou Zhang, Hao Song, Guodong Xie, Long Li, Cong Liu, Jing Du, Andreas F. Molisch, Moshe Tur, and Alan E. Willner, "400-Gbit/s QPSK Free-Space Optical Communication Link Based on Four-Fold Multiplexing of Hermite–Gaussian or Laguerre–Gaussian Modes by Varying Both Modal Indices," **Optics Letters**, vol. **43**, no. 16, pp. 3889-3892, 2018.

94. Yinwen Cao, Haoqian Song, Youichi Akasaka, Peicheng Liao, Ahmed Almaiman, Fatemeh Alishahi, Ahmad Fallahpour, Changjing Bao, Amirhossein Mohajerin-Ariaei, Tadashi Ikeuchi, Dmitry Starodubov, Joseph Touch, Moshe Tur, and Alan E. Willner, "Raman-Assisted Phase Sensitive Amplifier Using a Fiber Bragg Grating-Based Tunable Phase Shifter," **Optics Letters**, vol. **43**, no. 16, pp. 3949-3952, 2018.

95. Peicheng Liao, Changjing Bao, Arne Kordts, Maxim Karpov, Martin H. P. Pfeiffer, Lin Zhang, Yinwen Cao, Ahmed Almaiman, Amirhossein Mohajerin-Ariaei, Fatemeh Alishahi, Ahmad Fallahpour, Kaiheng Zou, Moshe Tur, Tobias J. Kippenberg, and Alan E. Willner, "Effects of Erbium-Doped Fiber Amplifier Induced Pump Noise on Soliton Kerr Frequency Combs for 64-Quadrature Amplitude Modulation Transmission," **Optics Letters**, vol. **43**, no. 11, pp. 2495-2498, 2018.

REFEREED JOURNAL PAPERS: (CONTINUED)

96. Long Li, Runzhou Zhang, Guodong Xie, Yongxiong Ren, Zhe Zhao, Zhe Wang, Cong Liu, Haoqian Song, Kai Pang, Robert Bock, Moshe Tur, and Alan E. Willner, "Experimental Demonstration of Beaconless Beam Displacement Tracking for an Orbital Angular Momentum Multiplexed Free-Space Optical Link," **Optics Letters**, vol. **43**, no. 10, pp. 2392-2395, 2018.

97. Ahmed Almaiman, Yinwen Cao, Amirhossein Mohajerin-Ariaei, Morteza Ziyadi, Peicheng Liao, Changjing Bao, Fatemeh Alishahi, Ahmad Fallahpour, Bishara Shame, Youichi Akasaka, Tadashi Ikeuchi, Steven Wilkinson, Joseph D. Touch, Moshe Tur, and Alan E. Willner "Phase-Sensitive QPSK Channel Phase Quantization by Amplifying the Fourth-Harmonic Idler Using Counter-Propagating Brillouin Amplification," **Optics Communications**, vol. **423**, pp. 48-52, 2018.

98. Changjing Bao, Peicheng Liao, Arne Kordts, Maxim Karpov, Martin H. P. Pfeiffer, Lin Zhang, Yinwen Cao, Guodong Xie, Cong Liu, Yan Yan, Ahmed Almaiman, Amirhossein Mohajerin-Ariaei, Ahmad Fallahpour, Moshe Tur, Tobias J Kippenberg, and Alan E. Willner, "Tunable Insertion of Multiple Lines into a Kerr Frequency Comb using Electro-Optical Modulators," **Optics Letters**, vol. **42**, no. 19, pp. 3765-3768, 2017.

    **** Selected by editors as one of two papers for that month to appear in OSA Spotlight on Optics. ****

99. Guodong Xie, Haoqian Song, Zhe Zhao, Giovanni Milione, Yongxiong Ren, Cong Liu, Runzhou Zhang, Changjing Bao, Long Li, Zhe Wang, Kai Pang, Dmitry Starodubov, Brittany Lynn, Moshe Tur, and Alan E. Willner, "Using a Complex Optical Orbital-Angular-Momentum Spectrum to Measure Object Parameters," **Optics Letters**, vol. **42**, no. 21, pp. 4482-4485, 2017.

    **** Selected by editors as one of two papers for that month to appear in OSA Spotlight on Optics. ****
    **** #3 most downloaded article on Optical Angular Momentum and Optical Vortices in Optics Letters from Sept. 2017 to Sept. 2018. ****

100. Guodong Xie, Cong Liu, Long Li, Yongxiong Ren, Zhe Zhao, Yan Yan, Nisar Ahmed, Zhe Wang, Asher J. Willner, Changjing Bao, Yinwen Cao, Peicheng Liao, Morteza Ziyadi, Ahmed Almaiman, Solyman Ashrafi, Moshe Tur, and Alan E. Willner, "Spatial Light Structuring Using a Combination of Multiple Orthogonal Orbital Angular Momentum Beams with Complex Coefficients," **Optics Letters**, vol. **42**, no. 5, pp. 991-994, 2017.

101. Long Li, Runzhou Zhang, Zhe Zhao, Guodong Xie, Peicheng Liao, Kai Pang, Haoqian Song, Cong Liu, Yongxiong Ren, Guillaume Labroille, Pu Jian, Dmitry Starodubov, Brittany Lynn, Robert Bock, Moshe Tur, and Alan E Willner, "High-Capacity Free-Space Optical Communications Between a Ground Transmitter and a Ground Receiver via a UAV Using Multiplexing of Multiple Orbital-Angular-Momentum Beams," **Scientific Reports**, vol. **7**, no. 17427, pp. 1-12, 2017.

102. Mohammad Mirhosseini, Dongzhi Fu, Jiapeng Zhao, Seyed Mohammad Hashemi Rafsanjani, Alan E. Willner, and Robert W. Boyd, "Sorting Photons by Radial Quantum Number," **Physical Review Letters,** vol. **119**, no. 26, pp. 263602, 2017.

103. Yongxiong Ren, Cong Liu, Kai Pang, Jiapeng Zhao, Yinwen Cao, Guodong Xie, Long Li, Peicheng Liao, Zhe Zhao, Moshe Tur, Robert W Boyd, and Alan E Willner, "Spatially Multiplexed Orbital Angular Momentum-Encoded Single Photon and Classical Channels in a Free-space Optical Communications Link," **Optics Letters**, vol. **42**, no. 21, pp. 4482-4485, 2017.

    **** #20 most downloaded article on Optical Angular Momentum and Optical Vortices in Optics Letters from Sept. 2017 to Sept. 2018. ****
    **** #3 downloaded article in Optics Letters for a few days in Nov. 2017. ****

REFEREED JOURNAL PAPERS: (CONTINUED)

104. Peicheng Liao, Changjing Bao, Arne Kordts, Maxim Karpov, Martin H. P. Pfeiffer, Lin Zhang, Yinwen Cao, Ahmed Almaiman, Amirhossein Mohajerin-Ariaei, Moshe Tur, Martin M. Fejer, Tobias J. Kippenberg, and Alan E. Willner, "Pump-Linewidth-Tolerant Wavelength Multicasting using Soliton Kerr Frequency Combs," **Optics Letters**, vol. **42**, no. 16, pp. 3177-3180, 2017.

    **** Paper selected as Editors' Pick: 4 out of 49 papers in that issue of Optics Letters. ****
    **** #3 downloaded article in Optics Letters for a few days in Aug. 2017. ****

105. Joe Touch, Joseph Bannister, Stephen Suryaputra, and Alan E. Willner, "A Design for an Internet Router with a Digital Optical Data Plane," **Applied Sciences**, vol. **7**, no. 143, pp. 1-19, 2017.

106. Yongxiong Ren, Long Li, Guodong Xie, Yan Yan, Yinwen Cao, Hao Huang, Nisar Ahmed, Zhe Zhao, Peicheng Liao, Chongfu Zhang, Giuseppe Caire, Andreas F Molisch, Moshe Tur, Alan E Willner, "Line-of-sight Millimeter-wave Communications using Orbital Angular Momentum Multiplexing Combined with Conventional Spatial Multiplexing," **IEEE Transactions on Wireless Communications**, vol. **16**, no. 5, pp. 3151-3161, 2017.

107. Yinwen Cao, Morteza Ziyadi, Ahmed Almaiman, Amirhossein Mohajerin-Ariaei, Peicheng Liao, Changjing Bao, Fatemeh Alishahi, Ahmad Fallahpour, Bishara Shamee, Asher J. Willner, Youichi Akasaka, Tadashi Ikeuchi, Steven Wilkinson, Carsten Langrock, Martin M. Fejer, Joseph Touch, Moshe Tur, and Alan E. Willner, "Pilot-Tone based Self-Homodyne Detection Using Optical Nonlinear Wave Mixing," **Optics Letters**, vol. **42**, no. 9, pp. 1840-1843, 2017.

108. Changjing Bao, Hossein Taheri, Lin Zhang, Andrey Matsko, Yan Yan, Peicheng Liao, Lute Maleki, Alan E Willner, "High-Order Dispersion in Kerr Comb Oscillators**," Journal of the Optical Society of America B,** vol. **34**, no. 4, pp. 715-725, 2017.

    **** Paper selected as Editors' Pick: 4 out of 24 papers in that issue of JOSA B. ****

109. Zhe Wang, Yan Yan, Amir Arbabi, Guodong Xie, Cong Liu, Zhe Zhao, Yongxiong Ren, Long Li, Nisar Ahmed, Asher J. Willner, Ehsan Arbabi, Andrei Faraon, Robert Bock, Solyman Ashrafi, Moshe Tur, and Alan E. Willner, "Orbital Angular Momentum Beams Generated by Passive Dielectric Phase Masks and Their Performance in a Communication Link," **Optics Letters**, vol. **42**, no. 14, pp. 2746-2749, 2017.

    **** #10 most downloaded article on Fiber Optics and Optical Communications in Journal of the Optical Society of America B and Optics Letters from Mar. 2017 to Mar. 2018. ****

110. Peicheng Liao, Changjing Bao, Arne Kordts, Maxim Karpov, Martin H. P. Pfeiffer, Lin Zhang, Amirhossein Mohajerin-Ariaei, Yinwen Cao, Ahmed Almaiman, Morteza Ziyadi, Steven R. Wilkinson, Moshe Tur, Tobias J. Kippenberg, and Alan E. Willner, "Dependence of a Microresonator Kerr Frequency Comb on the Pump Linewidth," **Optics Letters**, vol. **42**, no. 4, pp. 779-782, 2017.
    Division

111. Changjing Bao, Peicheng Liao, Arne Kordts, Lin Zhang, Maxim Karpov, Martin H. P. Pfeiffer, Yan Yan, Yinwen Cao, Ahmed Almaiman, Guodong Xie, Amirhossein Mohajerin-Ariaei, Long Li, Morteza Ziyadi, Steven R. Wilkinson, Moshe Tur, Tobias J. Kippenberg, and Alan E. Willner, "Dual-Pump Generation of High-Coherence Primary Kerr Combs with Multiple Sub-Lines," **Optics Letters**, vol. **42**, no. 3, pp. 595-598, 2017.

    **** Paper selected as Editors' Pick: 4 out of 71 papers in that issue of Optics Letters. ****

112. Guodong Xie, Long Li, Yongxiong Ren, Yan Yan, Nisar Ahmed, Zhe Zhao, Changjing Bao, Zhe Wang, Cong Liu, Haoqian Song, Runzhou Zhang, Kai Pang, Solyman Ashrafi, Moshe Tur, and Alan E. Willner,

REFEREED JOURNAL PAPERS: (CONTINUED)

"Localization from the Unique Intensity Gradient of an Orbital-Angular-Momentum Beam," **Optics Letters**, vol. **42**, no. 3, pp. 395-398, 2017.

113. Yongxiong Ren, Long Li, Zhe Wang, Seyedeh Mahsa Kamali, Ehsan Arbabi, Amir Arbabi, Zhe Zhao, Guodong Xie, Yinwen Cao, Nisar Ahmed, Yan Yan, Cong Liu, Asher Willner, Solyman Ashrafi, Moshe Tur, Andrei Faraon, and Alan E. Willner, "Orbital Angular Momentum-based Space Division Multiplexing for High-capacity Underwater Optical Communications," **Scientific Reports**, vol. **6**, no. 33306, pp. 1-10, 2016.

114. Yan Yan, Long Li, Guodong Xie, Changjing Bao, Peicheng Liao, Hao Huang, Yongxiong Ren, Nisar Ahmed, Zhe Zhao, Zhe Wang, Nima Ashrafi, Solyman Ashrafi, Shilpa Talwar, Soji Sajuyigbe, Moshe Tur, Andreas F. Molisch, and Alan E. Willner, "Multipath Effects in Millimetre-Wave Wireless Communication using Orbital Angular Momentum Multiplexing," **Scientific Reports**, vol. **6**, no. 33482, pp. 1-10, 2016.

115. Amirhossein Mohajerin-Ariaei, Morteza Ziyadi, Ahmed Almaiman, Yinwen Cao, Fatemeh Alishahi, Mohammad Reza Chitgarha, Ahmad Fallahpour, Jeng-Yuan Yang, Changjing Bao, Peicheng Liao, Bishara Shamee, Youichi Akasaka, Motoyoshi Sekiya, Joseph D. Touch, Moshe Tur, Carsten Langrock, Martin M. Fejer, and Alan E. Willner, "Simultaneous All-Optical Phase Noise Mitigation and Automatically Locked Homodyne Reception of an Incoming QPSK Data Signal," **Optics Letters**, vol. **41**, no. 20, pp. 4779-4782, 2016.

116. Ahmed Almaiman, Yinwen Cao, Morteza Ziyadi, Amirhossein Mohajerin-Ariaei, Peicheng Liao, Changjing Bao, Fatemeh Alishahi, Ahmad Fallahpour, Bishara Shamee, Nisar Ahmed, Asher J. Willner, Youichi Akasaka, Tadashi Ikeuchi, Shigehiro Takasaka, Ryuichi Sugizaki, Steven Wilkinson, Joseph D. Touch, Moshe Tur, and Alan E. Willner, "Experimental Demonstration of Phase-Sensitive Regeneration of a Binary Phase-Shift Keying Channel Without a Phase-Locked Loop using Brillouin Amplification," **Optics Letters**, vol. **41**, no. 23, pp. 5434-5437, 2016.

117. Long Li, Guodong Xie, Yan Yan, Yongxiong Ren, Peicheng Liao, Zhe Zhao, Nisar Ahmed, Zhe Wang, Changjing Bao, Asher J. Willner, Solyman Ashrafi, Moshe Tur, and Alan E. Willner, "Power Loss Mitigation of Orbital-Angular-Momentum-Multiplexed Free-Space Optical Links using Nonzero Radial Index Laguerre–Gaussian Beams," **Journal of the Optical Society of America B**, vol. **34**, no. 1, pp. 1-6, 2017.

    **** #15 most downloaded article on Optical Communications in Advances in Optics and Photonics, Journal of the Optical Society of America B and Optics Letters from Feb. 2018 to Feb. 2019. ****
    **** #19 most downloaded article on Fiber Optics and Optical Communications in Journal of the Optical Society of America B and Optics Letters from Mar. 2017 to Mar. 2018. ****
    **** #2 downloaded article in fiber optics from Journal of the Optical Society of America B and Optics Letters between Aug. 2016 and Aug. 2017. ****

118. Guodong Xie, Zhe Zhao, Yan Yan, Long Li, Yongxiong Ren, Nisar Ahmed, Yinwen Cao, Asher J. Willner, Changjing Bao, Zhe Wang, Cong Liu, Morteza Ziyadi, Shilpa Talwar, Soji Sajuyigbe, Solyman Ashrafi, Moshe Tur, Andreas F. Molisch, and Alan E. Willner, "Demonstration of Tunable Steering and Multiplexing of Two 28 GHz Data-Carrying Orbital Angular Momentum Beams Using Antenna Array," **Scientific Reports**, vol. **6**, no. 37078, pp. 1-9, 2016.

119. Seo, Kyung Hee, Jae Seung Lee, and Alan E. Willner. "Time-dependent Analysis of Optical Receivers Using Receiver Eigenmodes," **Journal of The Optical Society of Korea**, vol. **17**, no. 5, pp. 641-641, 2016.

120. Changjing Bao, Peicheng Liao, Arne Kordts, Maxim Karpov, Martin H. P. Pfeiffer, Lin Zhang, Yan Yan, Guodong Xie, Yinwen Cao, Ahmed Almaiman, Morteza Ziyadi, Long Li, Zhe Zhao, Amirhossein Mohajerin-Ariaei, Steven R. Wilkinson, Moshe Tur, Martin M. Fejer, Tobias J. Kippenberg, and Alan E. Willner,

REFEREED JOURNAL PAPERS: (CONTINUED)

"Demonstration of Optical Multicasting using Kerr Frequency Comb Lines," **Optics Letters**, vol. **41**, no. 16, pp. 3876-3879, 2016.

**** #2 downloaded article in OSA subscription journals for a few days in August 2016. ****

121. Changjing Bao, Peicheng Liao, Lin Zhang, Yan Yan, Yinwen Cao, Guodong Xie, Amirhossein Mohajerin-Ariaei, Long Li, Morteza Ziyadi, Ahmed Almaiman, Lionel C. Kimerling, Jurgen Michel, and Alan E. Willner, "Effect of a Breather Soliton in Kerr Frequency Combs on Optical Communication Systems," **Optics Letters**, vol. **41**, no. 8, pp. 1764-1767, 2016.

122. Yongxiong Ren, Zhe Wang, Guodong Xie, Long Li, Asher J. Willner, Yinwen Cao, Zhe Zhao, Yan Yan, Nisar Ahmed, Nima Ashrafi, Solyman Ashrafi, Robert Bock, Moshe Tur, and Alan E. Willner, "Atmospheric Turbulence Mitigation in an OAM-Based MIMO Free-Space Optical Link using Spatial Diversity Combined with MIMO Equalization," **Optics Letters**, vol. **41**, no. 11, pp. 2406-2409, 2016.

123. Guodong Xie, Yongxiong Ren, Yan Yan, Hao Huang, Nisar Ahmed, Long Li, Zhe Zhao, Changjing Bao, Moshe Tur, Solyman Ashrafi, and Alan E. Willner, "Experimental Demonstration of a 200-Gbit/s Free-Space Optical Link by Multiplexing Laguerre–Gaussian Beams with Different Radial Indices," **Optics Letters**, vol. **41**, no.15, pp. 3447-3450, 2016.

124. Yinwen Cao, Morteza Ziyadi, Amirhossein Mohajerin-Ariaei, Ahmed Almaiman, Peicheng Liao, Changjing Bao, Fatemeh Alishahi, Ahmad Falahpour, Bishara Shamee, Jeng-yuan Yang, Youichi Akasaka, Motoyoshi Sekiya, Moshe Tur, Carsten Langrock, Martin Fejer, Joseph Touch, and Alan E. Willner, "Reconfigurable Optical Inter-Channel Interference Mitigation for Spectrally Overlapped QPSK Signals using Nonlinear Wave Mixing in Cascaded PPLN Waveguides," **Optics Letters**, vol. **41**, no. 14, pp. 3233-3236, 2016.

125. Ahmed Almaiman, Morteza Ziyadi, Amirhossein Mohajerin-Ariaei, Yinwen Cao, Mohammad Reza Chitgarha, Peicheng Liao, Changjing Bao, Bishara Shamee, Nisar Ahmed, Fatemeh Alishahi, Ahmad Fallahpour, Youichi Akasaka, Jeng-Yuan Yang, Motoyoshi Sekiya, Joseph D. Touch, Moshe Tur, Carsten Langrock, Martin M. Fejer, and Alan E. Willner, "Experimental Demonstration of Tunable Homodyne Detection of WDM and Dual-Polarization PSK Channels by Automatically Locking the Channels to a Local Pump Laser using Nonlinear Mixing," **Optics Letters**, vol. **41**, no. 12, pp. 2680-2683, 2016.

126. N. Ahmed, Z. Zhao, L. Li, H. Huang, M.P.J. Lavery, P. Liao, Y. Yan, Z. Wang, G. Xie, Y. Ren, A. Almaiman, A. J. Willner, S. Ashrafi, A. F. Molish, M. Tur, and A. E. Willner, "Mode-Division-Multiplexing of Multiple Bessel-Gaussian Beams Carrying Orbital-Angular-Momentum for Obstruction-Tolerant Free-Space Optical and Millimetre-Wave Communication Links," **Scientific Reports**, vol. **6**, no. 22082, pp. 1-10, 2016.

127. Yongxiong Ren, Zhe Wang, Peicheng Liao, Long Li, Guodong Xie, Hao Huang, Zhe Zhao, Yan Yan, Nisar Ahmed, Asher Willner, Martin P. J. Lavery, Nima Ashrafi, Solyman Ashrafi, Robert Bock, Moshe Tur, Ivan B. Djordjevic, Mark A. Neifeld, and Alan E. Willner, "Experimental Characterization of a 400 Gbit/s Orbital Angular Momentum Multiplexed Free-space Optical Link over 120-meters," **Optics Letters**, vol. **41**, no. 3, pp. 622-625, 2016.

**** #14 most cited article in Optics Letters from 2016 to 2018. ****
**** #2 downloaded article in OSA subscription journals for a few days in February 2016. ****

128. Yinwen Cao, Morteza Ziyadi, Youichi Akasaka, Amirhossein M. Ariaei, Jeng-Yuan Yang, Ahmed Almaiman, Peicheng Liao, Fatemeh Alishahi, Nisar Ahmed, Asher J. Willner, Shigehiro Takasaka, Ryuichi Sugizaki, Joseph Touch, Motoyoshi Sekiya, Moshe Tur, and Alan Willner, "All Optical Signal Level Swapping and Multilevel Amplitude Noise Mitigation 59ased on Different Regions of Optical Parameteric Amplification," **Optics Letters,** vol. **41**, no. 4, pp. 677-680, 2016.

REFEREED JOURNAL PAPERS: (CONTINUED)

129. Long Li, Guodong Xie, Yongxiong Ren, Nisar Ahmed, Hao Huang, Zhe Zhao, Peicheng Liao, Martin. P.J. Lavery, Yan Yan, Changjing Bao, Zhe Wang, Asher J. Willner, Nima Ashrafi, Solyman Ashrafi, Moshe Tur, and Alan E. Willner, "Orbital-Angular-Momentum-Multiplexed Free-Space Optical Communication Link Using Transmitter Lenses," **Applied Optics**, vol. **55**, no. 8, pp. 2098-2103, 2016.

130. Martin P. J. Lavery, Hao Huang, Yongxiong Ren, Guodong Xie, and Alan E. Willner, "Demonstration of a 280-Gbit/s Free-space Space-Division-Multiplexing Communications Link Utilizing Plane-wave Spatial Multiplexing," **Optics Letters**, vol. **41**, no. 5, pp. 851-855, 2016.

131. Morteza Ziyadi, Amirhossein Mohajerin-Ariaei, Ahmed Almaiman, Yinwen Cao, Mohammad Reza Chitgarha, Loukas Paraschis, Moshe Tur, Carsten Langrock, Martin M. Fejer, Joseph D. Touch, and Alan E. Willner, "Optical Channel De-aggregation of Quadrature-Phase-Shift-Keying and Eight-Phase-Shift-Keying Data using Mapping onto Constellation Axes," **Optics Letters**, vol. **40**, no. 21, pp. 4899-4902, 2015.

132. Asher J. Willner, Yongxiong Ren, Guodong Xie, Zhe Zhao, Yinwen Cao, Long Li, Nisar Ahmed, Zhe Wang, Yan Yan, Peicheng Liao, Cong Liu, Mohammad Mirhosseini, Robert W. Boyd, Moshe Tur, and Alan E. Willner, "Experimental Demonstration of 20 Gbit/s Data Encoding and 2 ns Channel Hopping using Orbital Angular Momentum Modes," **Optics Letters**, vol. **40**, no. 18, pp. 5810-5813, 2015.

    **** Selected by editors as one of two papers for that month to appear in OSA Spotlight on Optics. ****

133. Yongxiong Ren, Zhe Wang, Guodong Xie, Long Li, Yinwen Cao, Cong Liu, Peicheng Liao, Yan Yan, Nisar Ahmed, Zhe Zhao, Asher Willner, Nima Ashrafi, Solyman Ashrafi, Roger D. Linquist, Robert Bock, Moshe Tur, Andreas F. Molisch and Alan E. Willner, "Free-space Optical Communications using Orbital-Angular-Momentum Multiplexing Combined with MIMO-based Spatial Multiplexing," **Optics Letters**, vol. **40**, no. 18, pp. 4190-4193, 2015.

134. Hao Huang, Giovanni Milione, Martin P. J. Lavery, Guodong Xie, Yongxiong Ren, Yinwen Cao, Nisar Ahmed, Thien An Nguyen, Daniel A. Nolan, Ming-Jun Li, Moshe Tur, Robert R. Alfano, and Alan E. Willner, "Mode Division Multiplexing using an Orbital Angular Momentum Mode Sorter and 4×4 MIMO-DSP over a Graded-Index Few-Mode Optical Fibre," **Scientific Reports**, vol. **5**, no. 14931, pp. 1-7, 2015.

    **** Selected as a "Highly Cited Paper" by Web of Science in the Physics category (top 1% in citations amongst physics publications). ****

135. Guodong Xie, Long Li, Yongxiong Ren, Hao Huang, Yan Yan, Nisar Ahmed, Zhe Zhao, Martin P.J. Lavery, Nima Ashrafi, Solyman Ashrafi, Robert Bock, Moshe Tur, Andreas F. Molisch, and Alan E. Willner, "Performance Metrics and Design Considerations for a Free-Space Optical Orbital-Angular-Momentum Multiplexed Communication Link," **Optica,** vol. **2**, no. 4, pp. 357-365, 2015.

136. Amirhossein Mohajerin-Ariaei, Morteza Ziyadi, Mohammad Reza Chitgarha, Ahmed Almaiman, Yinwen Cao, Bishara Shamee, Jeng-Yuan Yang, Youichi Akasaka, Motoyoshi Sekiya, Shigehiro Takasaka, Ryuichi Sugizaki, Joseph D. Touch, Moshe Tur, Carsten Langrock, Martin M. Fejer, and Alan E. Willner, "Phase Noise Mitigation of QPSK Signal Utilizing Phase-Locked Multiplexing of Signal Harmonics and Amplitude Saturation," **Optics Letters,** vol. **40**, no. 14, pp. 3328-3331, 2015.

137. Morteza Ziyadi, Amirhossein Mohajerin-Ariaei, Mohammad Reza Chitgarha, Salman Khaleghi, Ahmed Almaiman, Yinwen Cao, Amin Abouzaid, Bishara Shamee, Moshe Tur, Loukas Paraschis, Carsten Langrock, Martin M. Fejer, Joseph D. Touch, and Alan E. Willner, "Tunable Radio Frequency Photonics Filter using a Comb-based Optical Tapped Delay Line with an Optical Nonlinear Multiplexer," **Optics Letters,** vol. **40**, no. 14, pp. 3284-3287, 2015.

REFEREED JOURNAL PAPERS: (CONTINUED)

138. Yongxiong Ren, Guodong Xie, Hao Huang, Long Li, Nisar Ahmed, Yan Yan, Martin P. J. Lavery, Robert Bock, Moshe Tur, Mark A. Neifeld, Robert W. Boyd, Jeffrey H. Shapiro, and Alan E. Willner, "Turbulence Compensation of an Orbital-Angular-Momentum and Polarization Multiplexed Link using a Data-Carrying Beacon on a Separate Wavelength," **Optics Letters,** vol. **40**, no. 10, pp. 2249-2252, 2015.

139. Ahmed Almaiman, Mohammad Reza Chitgarha, Wajih Daab, Morteza Ziyadi, Amirhossein Mohajerin-Ariaei, Salman Khaleghi, Moshe Willner, Vijay Vusirikala, Xiaoxue Zhao, Dan Kilper, Loukas Paraschis, Atiyah Ahsan, Michael Wang, Keren Bergman, Moshe Tur, Joseph D. Touch, and Alan E. Willner, "Experimental Demonstration of Robustness and Accuracy of a DLI-based OSNR Monitor Under Changes in the Transmitter and Link for Different Modulation Formats and Baud Rates," **Optics Letters,** vol. **40**, no. 9, pp. 2012-2015, 2015.

140. Guodong Xie, Yongxiong Ren, Hao Huang, Martin P.J. Lavery, Nisar Ahmed, Yan Yan, Changjing Bao, Long Li, Zhe Zhao, Yinwen Cao, Moshe Willner, Moshe Tur, Samuel J. Dolinar, Robert W Boyd, Jeffrey H. Shapiro, and Alan E. Willner, "Phase Correction for a Distorted Orbital Angular Momentum Beam using a Zernike Polynomials based Stochastic-Parallel-Gradient-Descent Algorithm," **Optics Letters**, vol. **40**, no. 7, pp.1197-1200, 2015.

141. Asher Voskoboinik, Alan E. Willner, and Moshe Tur, "Extending the Dynamic Range of Sweep-Free Brillouin Optical Time-Domain Analyzer," **IEEE/OSA Journal of Lightwave Technology**, vol. **33**, no. 14, pp. 2978-2985, 2015.

142. Giovanni Milione, Martin P.J. Lavery, Hao Huang, Yongxiong Ren, Guodong Xie, Thien An Nguyen, Ebrahim Karimi, Lorenzo Marrucci, Daniel A. Nolan, Robert R. Alfano, and Alan E. Willner, "4 × 20 Gbit/s Mode Division Multiplexing Over Free Space using Vector Modes and a q-Plate Mode (De)Multiplexer," **Optics Letters,** vol. **40**, no. 9, pp. 1980-1983, 2015.

    ***Selected as a "Highly Cited Paper" by Web of Science in the Physics category (top 1% in citations amongst physics publications). ***
    *** One of the 16 papers in Editors' Picks Collection on 40th Anniversary of Optics Letters ***
    *** #2 downloaded article in OSA subscription journals for the week of April 27, 2015. ***
    *** #9 cited article published in Optics Letters from 2015 to 2016. ***

143. Changjing Bao, Yan Yan, Lin Zhang, Yang Yue, Nisar Ahmed, Anuradha M. Agarwal, Lionel C. Kimerling, Jurgen Michel, and Alan E. Willner, "Increased Bandwidth with Fattened and Low Dispersion in a Horizontal Double-Slot Silicon Waveguide," **Journal of the Optical Society of America B**, vol. **32**, no. 1, pp. 26-30, 2015.

    *** #1 downloaded article in OSA subscription journals for one week in January 2015. ***
    *** #7 cited article published in JOSA B from 2015 to 2016. ***

144. Morteza Ziyadi, Mohammad R. Chitgarha, Amirhossein M. Ariaei, Salman Khaleghi, Ahmed Almaiman, Yinwen Cao, Moshe Willner, Moshe Tur, Loukas Paraschis, Carsten Langrock, Martin Fejer, Joseph Touch, and Alan Willner, "Optical Nyquist Channel Generation using a Comb-based Tunable Optical Tapped-Delay-Line," **Optics Letters**, vol. **39**, no. 23, pp. 6585-6588, 2014.

145. Yongxiong Ren, Guodong Xie, Hao Huang, Nisar Ahmed, Yan Yan, Long Li, Changjing Bao, Martin P. J. Lavery, Moshe Tur, Mark A. Neifeld, Robert W. Boyd, Jeffrey H. Shapiro, and Alan Willner, "Adaptive Optics-based Simultaneous Pre-and Post-turbulence Compensation of Multiple Orbital-Angular-Momentum Beams in a Bidirectional Free-space Optical Link," **Optica**, vol. **1**, no. 6, pp. 376-382, 2014.

146. Yan Yan, Guodong Xie, Martin P.J. Lavery, Hao Huang, Nisar Ahemd, Changjing Bao, Yongxiong Ren, Yinwen Cao, Long Li, Andreas F. Molisch, Moshe Tur, Miles J. Padgett, and Alan E. Willner, "High-

REFEREED JOURNAL PAPERS: (CONTINUED)

Capacity Millimetre-wave Communications with Orbital-Angular-Momentum Multiplexing," **Nature Communications**, vol. **5**, pp. 1-9, 2014.

**** #2 most read Nature Communications article in late September 2014. ****
**** Selected as a "Highly Cited Paper" by Web of Science in the Physics category (top 1% in citations amongst physics publications). ****

147. Changjing Bao, Lin Zhang, Andrey Matsko, Yan Yan, Zhe Zhao, Guodong Xie, Anuradha M. Agarwal, Lionel C. Kimerling, Jurgen Michel, Lute Maleki, and Alan E. Willner, "Nonlinear Conversion Efficiency in Kerr Frequency Comb Generation," **Optics Letters**, vol. **39**, no. 21, pp. 6126-6129, 2014.

148. Mohammad Reza Chitgarha, Morteza Ziyadi, Salman Khaleghi, Amirhossein Mohajerin-Ariaei, Ahmed Almaiman, Joseph D. Touch, Moshe Tur, Carsten Langrock, Martin M. Fejer, and Alan E. Willner, "Reconfigurable 2D optical tapped-delay-line to perform correlation on images," **Optics Letters**, vol. **39**, no. 23, pp. 6573-6576, 2014.

149. Mohammad Reza Chitgarha, Salman Khaleghi, Morteza Ziyadi, Ahmed Almaiman, Amirhossein Mohajerin-Ariaei, Ori Gerstel, Loukas Paraschis, Carsten Langrock, Martin M. Fejer, Joseph Touch, and Alan E. Willner, "Demonstration of Tunable Optical Generation of Higher-order Modulation Formats using Nonlinearities and Coherent Frequency Comb," **Optics Letters**, vol. **39**, no. 16, pp. 4915-4918, 2014.

**** Selected by editors as one of two papers for that month to appear in OSA Spotlight on Optics. ****

150. Hao Huang, Yinwen Cao, Guodong Xie, Yongxiong Ren, Yan Yan, Changjing Bao, Nisar Ahmed, Mark A. Neifeld, Samuel J. Dolinar, and Alan E. Willner, "Crosstalk Mitigation in a Free-space Orbital Angular Momentum Multiplexed Communication Link using 4×4 MIMO Equalization," **Optics Letters**, vol. **39**, no. 16, pp. 4360-4363, 2014.

151. Mohammad Reza Chitgarha, Salman Khaleghi, Morteza Ziyadi, Amirhossein Mohajerin-Ariaei, Ahmed Almaiman, Wajih Daab, Devora Rogawski, Moshe Tur, Joseph D. Touch, Carsten Langrock, Martin M. Fejer, and Alan E. Willner, "Demonstration of All-optical Phase Noise Suppression Scheme using Optical Nonlinearity and Conversion/Dispersion Delay," **Optics Letters**, vol. **39**, no. 10, pp. 2928-2931, 2014.

152. Yongxiong Ren, Guodong Xie, Hao Huang, Changjing Bao, Yan Yan, Nisar Ahmed, Martin P. J. Lavery, Baris I. Erkmen, Samuel Dolinar, Moshe Tur, Mark A. Neifeld, Miles J. Padgett, Robert W. Boyd, Jeffrey H. Shapiro, and Alan E. Willner, "Adaptive Optics Compensation of Multiple Orbital Angular Momentum Beams Propagating Through Emulated Atmospheric Turbulence," **Optics Letters,** vol. **39**, no. 10, pp. 2845-2848, 2014.

**** #2 downloaded Optics Letters article in June 2014. ****

153. Hao Huang, Yongxiong Ren, Guodong Xie, Yan Yan, Yang Yue, Nisar Ahmed, Martin P. J. Lavery, Miles J. Padgett, Sam Dolinar, Moshe Tur, and Alan E. Willner, "Tunable Orbital Angular Momentum Mode Filter Based on Optical Geometric Transformation," **Optics Letters**, vol. **39**, no. 6, pp. 1689-1692 (2014).

154. Mohammad Reza Chitgarha, Salman Khaleghi, Wajih Daab, Ahmed Almaiman, Morteza Ziyadi, Amirhossein Mohajerin-Ariaei, Devora Rogawski, Moshe Tur, Joseph D. Touch, Vijay Vusirikala, Wendy Zhao, and Alan E. Willner, "Demonstration of In-service Wavelength Division Multiplexing Optical-signal-to-noise Ratio Performance Monitoring and Operating Guidelines for Coherent Data Channels With Different Modulation Formats and Various Baud Rates," **Optics Letters**, vol. **39**, no. 6, pp. 1605-1608, 2014.

155. Salman Khaleghi, Mohammad Reza Chitgarha, Omer F. Yilmaz, Moshe Tur, Michael W. Haney, Carsten Langrock, Martin M. Fejer, and Alan E. Willner, "Experimental Characterization of Phase Tuning using Fine

REFEREED JOURNAL PAPERS: (CONTINUED)

Wavelength Offsets in a Tunable Complex-Coefficient Optical Tapped-Delay-Dine," **Optics Letters**, vol. **39**, no. 4, pp. 735-738, 2014.

156. Salman Khaleghi, Mohammad Reza Chitgarha, Omer F. Yilmaz, Moshe Tur, Michael W. Haney, Carsten Langrock, Martin M. Fejer, and Alan E. Willner, "Experimental Characterization of Phase Tuning using Fine Wavelength Offsets in a Tunable Complex-coefficient Optical Tapped-delay-line," **Optics Letters,** vol. **39**, no. 4, pp. 735-738, 2014.

157. Kyung Hee Seo, Jae Seung Lee, and Alan E. Willner, "Time-dependent Analysis of Optical Receivers using Receiver Eigenmodes," **Journal of the Optical Society of Korea**, vol. **17**, no. 4, pp. 305-311, 2013.

158. Hao Huang, Guodong Xie, Yan Yan, Nisar Ahmed, Yongxiong Ren, Yang Yue, Dvora Rogawski, Moshe J. Willner, Baris I. Erkmen, Kevin M. Birnbaum, Samuel J. Dolinar, Martin P. J. Lavery, Miles J. Padgett, Moshe Tur, and Alan E. Willner, "100 Tbit/s Free-space Data Link Enabled by Three-dimensional Multiplexing of Orbital Angular Momentum, Polarization, and Wavelength," **Optics Letters,** vol. **39**, no. 2, pp. 197-200, 2014.

    **** Selected as a "Highly Cited Paper" by Web of Science in the Physics category (top 1% in citations amongst Physics publications). ****
    **** One of the 16 papers in Editors' Picks Collection on 40th Anniversary of Optics Letters ****
    **** One of the 10 most cited articles from Optics Letters from 2012 to 2019 ****
    **** #2 cited article published in Optics Letters from 2015 to 2016. ****

159. Moshe J. Willner, Hao Huang, Nisar Ahmed, Guodong Xie, Yongxiong Ren, Yan Yan, Martin P. J. Lavery, Miles J. Padgett, Moshe Tur, and Alan E. Willner, "Reconfigurable Orbital Angular Momentum and Polarization Manipulation of 100-Gbit/s QPSK Data Channels," **Optics Letters,** vol. **38**, no. 24, pp. 5240-5243, 2013.

160. Deng Pan, Changjian Ke, Songnian Fu, Yaping Liu, Deming Liu, and Alan E. Willner, "All-optical Spectral Linewidth Reduction of Lasers for Coherent Optical Communication," **Optics Letters,** vol. **38**, no. 24, pp. 5220-5223, 2013.

161. Xiaoyan Zhou, Lin Zhang, Andrea M. Armani, Raymond G. Beausoleil, Alan E. Willner, and Wei Pang, "Power Enhancement and Phase regimes in Embedded Microring Resonators in Analogy with Electromagnetically Induced Transparency," **Optics Express**, vol. **21**, no. 17, pp. 20179-20186, 2013.

162. Hao Huang, Yang Yue, Yan Yan, Nisar Ahmed, Yongxiong Ren, Moshe Tur, and Alan E. Willner, "Liquid-crystal-on-silicon-based Optical Add/Drop Multiplexer for Orbital-Angular-MomentumMultiplexed Optical Links," **Optics Letters,** vol. **38**, no. 23, pp. 5142-5145, 2013.

163. Salman Khaleghi, Mohammad Reza Chitgarha, Morteza Ziyadi, Wajih Daab, Amirhossein Mohajerin-Ariaei, Dvora Rogawski, Joseph D. Touch, Moshe Tur, Carsten Langrock, Martin M. Fejer, and Alan E. Willner, "Simultaneous and Independent Processing of Multiple Input WDM data Signals using a Tunable Optical Tapped Delay Line," **Optics Letters,** vol. **38**, no. 21, pp. 4273-4276, 2013.

164. Mohammad Reza Chitgarha, Salman Khaleghi, Zahra Bakhtiari, Morteza Ziyadi, Ori Gerstel, Loukas Paraschis, Carsten Langrock, Martin M. Fejer,and Alan E. Willner, "Demonstration of Reconfigurable Optical Generation of Higher-order Modulation Formats up to 64-QAM using Optical Nonlinearity," **Optics Letters,**vol. **38**, no. 17, pp. 3350-3353, 2013.

165. Yan Yan, Yang Yue, Hao Huang, Yongxiong Ren, Nisar Ahmed, Moshe Tur, Samuel Dolinar, and Alan Willner, "Multicasting in a Spatial Division Multiplexing System Based on Optical Orbital Angular Momentum," **Optics Letters,** vol. **38**, no. 19, pp.3930-3933, 2013.

REFEREED JOURNAL PAPERS: (CONTINUED)

166. Yongxiong Ren, Hao Huang, Guodong Xie, Nisar Ahmed, Yan Yan, Baris I. Erkmen, Nivedita Chandrasekaran, Martin P. J. Lavery, Nicholas K. Steinhoff, Moshe Tur, Samuel Dolinar, Mark Neifeld, Miles J. Padgett, Robert W. Boyd, Jeffrey H. Shapiro, and Alan E. Willner, "Atmospheric Turbulence Effects on the Performance of a Free Space Optical Link Employing Orbital Angular Momentum Multiplexing," **Optics Letters,** vol. **38**, no. 20, pp.4062-4065, 2013.

167. Yang Yue, Hao Huang, Nisar Ahmed, Yan Yan, Yongxiong Ren, Guodong Xie, Dvora Rogawski, Moshe Tur, and Alan E. Willner, "Reconfigurable Switching of Orbital-angular-momentum-based Free-space Data Channels," **Optics Letters,** vol. **38**, no. 23, pp.5118-5121, 2013.

168. Nenad Bozinovic, Yang Yue, Yongxiong Ren, Moshe Tur, Poul Kristensen, Hao Huang, Alan E. Willner, and Siddharth Ramachandran,"Terabit-Scale Orbital Angular Momentum Mode Division Multiplexing in Fibers," **Science**, vol. **340**, no. 6140, pp. 1545-1548, 2013.

    ***Selected as a "Highly Cited Paper" by Web of Science in the Physics category (top 1% in citations amongst physics publications) ***

169. Mohammad RezaChitgarha, Salman Khaleghi, Omer F. Yilmaz, Moshe Tur, Michael W. Haney, Carsten Langrock, Martin M. Fejer, and Alan E. Willner, "Coherent Correlator and Equalizer using a Reconfigurable All-Optical Tapped Delay Line," **Optics Letters,** vol. **38**, no. 13, pp. 2271-2273, 2013.

170. Hao Huang, Yongxiong Ren, Yan Yan, Nisar Ahmed, Yang Yue, Amanda Bozovich, Baris I. Erkmen, Kevin Birnbaum, Sam Dolinar, Moshe Tur, and Alan E. Willner, "Phase-Shift Interference-Based Wavefront Characterization for Orbital Angular Momentum Modes," **Optics Letters**, vol. **38**, no. 13, pp. 2348-2350, 2013.

171. Jian Wang, Hongyan Fu, Dongyu Geng, and Alan E. Willner,"Single-PPLN-Assisted Wavelength-/Time-Selective Switching/Dropping/Swapping for 100-GHz-Spaced WDM Signals," **Optics Express**, Special Issue on European Conference on Optical Communications, vol. **21**, no. 3, pp. 3756-3774, 2013.

172. Salman Khaleghi, Mohammad Reza Chitgarha, Omer F. Yilmaz, Moshe Tur, Michael W. Haney, Carsten Langrock, Martin F. Fejer, and Alan E. Willner, "Reconfigurable Optical Quadrature Amplitude Modulation Converter/Encoder using a Tunable Complex Coefficient Optical Tapped Delay Line," **Optics Letters**, vol. **38**, no. 10, pp. 1600-1602, 2013.

173. Zhe Zhao, Jian Wang, Shuhui Li, and Alan E. Willner, "Metamaterials-Based Broadband Generation of Orbital Angular Momentum Carrying Vector Beams," **Optics Letters**, vol. **38**, no. 6, pp. 932-934, 2013.

174. Jae SeungLee and Alan E. Willner, "Analysis of Gaussian Optical Receivers," **IEEE/OSA Journal of Lightwave Technology**, vol. **31**, no. 16, pp. 2987-2993, 2013.

175. Jian Wang, Jeng-Yuan Yang, Hao Huang, and Alan E. Willner, "Three-Input Optical Addition and Subtraction of Quaternary Base Numbers," **Optics Express**, vol. **21**, no. 1, pp. 488-499, 2013

176. Martin P. J. Lavery, David J. Robertson, Anna Sponselli, Johannes Courtial, Nicholas K. Steinhoff, Glenn A. Tyler, Alan E. Willner, and Miles J. Padgett, "Efficient Measurement of an Optical Orbital-Angular-Momentum Spectrum Comprising More Than 50 States," **New Journal of Physics**, vol. **15**, no. 013024, pp. 1-7, 2013.

177. H. Huang, S. R. Nuccio, Y. Yue, J.-Y. Yang, Y. Ren, C. Wei, G. Yu, R. Dinu, D. Parekh, C. J. Chang-Hasnain, and A. E. Willner, "Broadband Modulation Performance of 100-GHz EO Polymer MZMs," **IEEE/OSA Journal of Lightwave Technology**, vol. **30**, no. 23, pp. 3647-3652, 2012.

REFEREED JOURNAL PAPERS: (CONTINUED)

178. Jian Wang, Jeng-Yuan Yang, Xiaoxia Wu, and Alan E. Willner, "Optical Hexadecimal Coding/Decoding using 16-QAM Signal and FWM in HNLFs," **IEEE/OSA Journal of Lightwave Technology**, vol. **30**, no. 17, pp. 2890-2900, 2012.

179. Jian Wang, Jeng-Yuan Yang, Irfan M. Fazal, Nisar Ahmed, Yan Yan, Hao Huang, Yongxiong Ren, Yang Yue, Samuel Dolinar, Moshe Tur and Alan E. Willner, "Terabit Free-Space Data Transmission Employing Orbital Angular Momentum Multiplexing," **Nature Photonics**, vol. **6**, pp. 488-496, 2012.

    **** Selected by Nature Photonics editors for press release, interview, and News & Views article. ****
    **** #1 downloaded Nature Photonics article in late June and early July 2012. ****
    **** #8 highest cited Nature Photonics paper since 2007 as of year 2023. ****
    **** #3 highest cited original primary research (not a review article) as of year 2023. ****

180. Irfan M. Fazal, Nisar Ahmed, Jian Wang, Jeng-Yuan Yang, Yan Yan, Bishara Shamee, Hao Huang, Yang Yue, Sam Dolinar, Moshe Tur, and Alan E. Willner, "2-Tbit/s Free-Space Data Transmission on Two Orthogonal Orbital-Angular-Momentum Beams Each Carrying 25 WDM Channels," **Optics Letters**, vol. **37**, no. 22, pp. 4753-4755, 2012.

181. S. Khaleghi, O.F. Yilmaz, M.R. Chitgarha, M. Tur, N. Ahmed, S.R. Nuccio, I.M. Fazal, X. Wu, M.W. Haney, C. Langrock, M.M. Fejer, and A.E. Willner, "High-Speed Correlation and Equalization using a Continuously Tunable All-Optical Tapped Delay Line," **IEEE Photonics Journal**, vol. **4**, no. 4, pp. 1220-1235, 2012.

182. Salman Khaleghi, Mohammad Reza Chitgarha, Omer F. Yilmaz, Moshe Tur, Michael W. Haney, Carsten Langrock, Martin M. Fejer, and Alan E. Willner, "Experimental Performance of a Fully Tunable Complex-Coefficient Optical FIR Filter using Wavelength Conversion and Chromatic Dispersion," **Optics Letters**, vol. **37,** no. 16, pp. 3420-3422, 2012.

183. Yang Yue, Lin Zhang, Yan Yan, Nisar Ahmed, Jeng-Yuan Yang, Hao Huang, Yongxiong Ren, Sam Dolinar, Moshe Tur, and Alan E. Willner, "Octave-Spanning Supercontinuum Generation of Vortices in an As2S3 Ring Photonic Crystal Fiber," **Optics Letters**, vol. **37**, no. 11, pp. 1889-1891, 2012.

184. Yang Yue, Yan Yan, Nisar Ahmed, Jeng-Yuan Yang, Lin Zhang, Yongxiong Ren, Hao Huang, Kevin M. Birnbaum, Baris I. Erkmen, Sam Dolinar, Moshe Tur, and Alan E. Willner, "Mode Properties and Propagation Effects of Optical Orbital Angular Momentum (OAM) Modes in a Ring Fiber," **IEEE Photonics Journal**, vol. **4**, no. 2, pp. 535-543, 2012.

185. Yan Yan, Yang Yue, Hao Huang, Jeng-Yuan Yang, Mohammad R. Chitgarha, Nisar Ahmed, Moshe Tur, Samuel. J. Dolinar, and Alan E. Willner, "Efficient Generation and Multiplexing of Optical Orbital Angular Momentum Modes in a Ring Fiber by using Multiple Coherent Inputs," **Optics Letters**, vol. **37**, no. 17, pp. 3645-3647, 2012.

186. Mohammad Reza Chitgarha, Salman Khaleghi, Omer F. Yilmaz, Moshe Tur, Michael W. Haney, Carsten Langrock, Martin M. Fejer, and Alan E. Willner, "Demonstration of Channel-Spacing-Tunable Demultiplexing of Optical Orthogonal-Frequency-Division-Multiplexed Subcarriers Utilizing Reconfigurable All-Optical Discrete Fourier Transform," **Optics Letters**, vol. **37**, no. 19, pp. 3975-3977, 2012.

187. Jian Wang, Scott R. Nuccio, Jeng-Yuan Yang, Xiaoxia Wu, Antonella Bogoni, and Alan E. Willner, "High-Speed Addition/Subtraction/Complement/Doubling of Quaternary Numbers using Optical Nonlinearities and DQPSK Signals," **Optics Letters**, vol.**37**, no. 7, pp.1139-1141, 2012.

    **** #6 downloaded article in OSA subscription journals on Optics in Computing in June 2016. ****

REFEREED JOURNAL PAPERS: (CONTINUED)

188. Antonella Bogoni, Xiaoxia Wu, Scott R. Nuccio, and Alan E. Willner, "640 Gb/s All-Optical Regenerator Based on a Periodically Poled Lithium Niobate Waveguide," **IEEE/OSA Journal of Lightwave Technology**, vol. **30**, no. 12, pp. 1829-1834, 2012.

189. L. Zhang, Q. Lin, Y. Yue, Y. Yan, R. G. Beausoleil, A. Agarwal, L. C. Kimerling, J. Michel, and A. E. Willner, "On-Chip Octave-Spanning Supercontinuum in Nanostructured Silicon Waveguides using Ultralow Pulse Energy," **IEEE Journal of Selected Topics in Quantum Electronics**, Special Issue on Quantum and Nanoscale Photonics, vol. **18**, no. 6, pp. 1799-1806, Nov/Dec 2012.

190. L. Zhang, Q. Lin, Y. Yue, Y. Yan, R. G. Beausoleil, and A. E. Willner, "Silicon Waveguide with Four Zero-Dispersion Wavelengths and its Application in On-Chip Octave-Spanning Supercontinuum Generation," **Optics Express**, vol. **20**, no. 2, pp. 1685-1690, 2012.

191. Omer F. Yilmaz, Lior Yaron, Salman Khaleghi, M. Reza Chitgarha, Moshe Tur, and Alan Willner, "True Time Delays using Conversion/Dispersion with Flat Magnitude Response for Wideband Analog RF Signals," **Optics Express**, vol. **20**, no. 8, pp. 8219-8227, 2012.

192. Yan Yan, Lin Zhang, Jian Wang, Jeng-Yuan Yang, Irfan M. Fazal, Nisar Ahmed, Alan E. Willner, and Samuel J. Dolinar, "Fiber Structure to Convert a Gaussian Beam to Higher-Order Optical Orbital Angular Momentum Modes," **Optics Letters**, vol. **37**, no. 16, pp. 3294-3296, 2012.

**** #8 most downloaded OSA journal article in Optical comms. and fiber optics from 2013-2014. ****

193. Weijian Yang, James Ferrara, Karen Grutter, Anthony Yeh, Chris Chase, Yang Yue, Alan E. Willner, Ming C. Wu, and Connie J. Chang-Hasnain, "Low Loss Hollow-Core Waveguide on a Silicon Substrate," **Nanophotonics**, vol. **1**, no. 1, pp. 23-29, 2012.

194. Hao Huang, Jeng-Yuan Yang, Xiaoxia Wu, Salman Khaleghi, Morteza Ziyadi, Moshe Tur, Carsten Langrock, Martin M. Fejer, Loukas Paraschis, and Alan E. Willner, "Simultaneous Subchannel Data Updating for Multiple Channels of 16-Quadrature Amplitude Modulation Signals using a Single Periodically Poled Lithium Niobate Waveguide," **Optics Letters**, vol.**37**, pp. 4365-4367, 2012.

195. Yang Yue, Lin Zhang, Xue Wang, Hao Huang, Weijian Yang, James Ferrara, Vadim Karagodsky, Christopher Chase, Moshe Tur, Connie J. Chang-Hasnain, Alan E. Willner, "Three-Dimensional Chirped High-contrast Grating Hollow-Core Waveguide," **IEEE Photonics Journal**, vol. **4**, no. 5, pp. 1372-1380, 2012.

196. Yang Yue, Hao Huang, Lin Zhang, Jian Wang, Jeng-Yuan Yang, Omer F. Yilmaz, Jacob S. Levy, Michal Lipson, and Alan E. Willner, "UWB Monocycle Pulse Generation using Two-Photon Absorption in a Silicon Waveguide," **Optics Letters**, vol. **37**, pp. 551-553, 2012.

197. Yang Yue, Lin Zhang, Hao Huang, Raymond G. Beausoleil, and Alan E. Willner, "Silicon-on-Nitride Waveguide with Ultralow Dispersion Over an Octave-Spanning Mid-Infrared Wavelength Range," **IEEE Photonics Journal**, vol. **4**, no. 1, pp. 126-132, 2012.

198. Leon Yao, Hao Huang, James Chen, Ernie Tan, and Alan Willner, "A Novel Scheme for Achieving Quasi-Uniform Rate Polarization Scrambling at 752 krad/s," **Optics Express**, vol. **20**, pp. 1691–1699, 2012.

199. Antonella Bogoni, Xiaoxia Wu, Scott R. Nuccio, Jian Wang, Zahra Bakhtiari, Alan E. Willner, "Photonic 640 Gb/s Reconfigurable OTDM Add-Drop Multiplexer Based on Pump Depletion in a single PPLN Waveguide," **IEEE Journal of Selected Topics in Quantum Electronics**, vol. **18**, no. 2, pp. 709-716, March/April 2012.

REFEREED JOURNAL PAPERS: (CONTINUED)

200. Asher Voskoboinik, Dvora Rogawski, Hao Huang, Yair Peled, Alan E. Willner, and Moshe Tur, "Frequency-Domain Analysis of Dynamically Applied Strain using Sweep-Free Brillouin Time-Domain Analyzer and Sloped-Assisted FBG Sensing," **Optics Express**, vol. **20**, no. 26, pp. B581-B586, 2012.

201. H. Huang, Y. Yue, L. Zhang, C. Chase, D. Parekh, F. Sedgwick, M.C. Wu, M. C.J. Chang-Hasnain, M. Tur, and A.E. Willner, "Analog Signal Transmission in a High-Contrast-Gratings-Based Hollow-Core-Waveguide," **IEEE/OSA Journal of Lightwave Technology**, vol.**30**, no.23, pp.3640-3646, 2012.

202. Yan Yan, Jian Wang, Lin Zhang, Jeng-Yuan Yang, Irfan M. Fazal, Nisar Ahmed, Bishara Shamee, Alan E. Willner, Kevin Birnbaum, and Sam Dolinar, "Fiber Coupler for Generating Orbital Angular Momentum Modes," **Optics Letters**, vol. **36**, no. 21, pp. 4269-4271, 2011.

203. Yan Yan, Lin Zhang, and Alan Willner, "Nondegenerate Mirrorless Oscillation in Silicon Waveguide," **Optics Letters**, vol. **36**, pp. 4113-4115, 2011.

204. Asher Voskoboinik, Omer F. Yilmaz, Alan W. Willner, and Moshe Tur, "Sweep-free Distributed Brillouin Time-Domain Analyzer (SF-BOTDA)," **Optics Express,** vol. **19**, no. 26, pp. B842-B847, 2011.

205. Hao Huang, Xiaoxia Wu, Jian Wang, Jeng-Yuan Yang, Asher Voskoboinik, and Alan E. Willner, "Nondegenerate Four-Wave-Mixing-Based Radio Frequency Up/Down Conversion using a Parametric Loop Mirror," **Optics Letters**, vol. **36**, pp. 4593-4595, 2011.

206. Ali Fard, Jeng-Yuan Yang, Brandon Buckley, Jian Wang, Mohammad R. Chitgarha, Lin Zhang, Alan E. Willner, and Bahram Jalali, "Time-Stretch Oscilloscope with Dual-Channel Differential Detection Front End for Monitoring of 100 Gb/s Return-to-Zero Differential Quadrature Phase-Shift Keying Data," **Optics Letters**, vol. **36**, no. 19, pp. 3804–3806, 2011.

207. Jian Wang, Hao Huang, Xue Wang, Jeng-Yuan Yang, and Alan E. Willner, "Reconfigurable 2.3-Tbit/s DQPSK Simultaneous Add/Drop, Data Exchange and Equalization using Double-Pass LCoS and Bidirectional HNLF," **Optics Express**, vol. **19**, no. 19, pp. 18246–18252. 2011.

208. Lin Zhang, Yan Yan, Yang Yue, Qiang Lin, Oskar Painter, Raymond G. Beausoleil, Alan E. Willner, "On-Chip Two-Octave Supercontinuum Generation by Enhancing Self-Steepening of Optical Pulses," **Optics Express**, vol. **19**, pp. 11584-11590, 2011.

209. Asher Voskoboinik, Jian Wang, Bishara Shamee, Scott R. Nuccio, Lin Zhang, Mohammadreza Chitgarha, Alan E. Willner, and Moshe Tur, "SBS-Based Fiber Optical Sensing using Frequency-Domain Simultaneous Tone Interrogation," **IEEE/OSA Journal of Lightwave Technology**, vol. **29**, pp. 1729-1735, 2011.

210. Antonella Bogoni, Xiaoxia Wu, Scott R. Nuccio, Nisar Ahmed, and Alan E. Willner, "160 Gbit/s Binary-to-Quaternary Amplitude Shift Keying Encoding in the Optical Domain," **Optics Letters**, vol. **36**, pp. 1978-1980, 2011.

211. Jeng-Yuan Yang, Mohammad R. Chitgarha, Lin Zhang, Jian Wang, Loukas Paraschis, and Alan E. Willner, "Optical Monitoring of PMD Accumulation on a Pol-MUX Phase-Modulated Signal using Degree-of-Polarization Measurements," **Optics Letters**, vol. **36**, pp. 3215-3217, 2011.

212. Omer F. Yilmaz, J. Wang, S. Khaleghi, X. Wang, S. Nuccio, X. Wu, and A. E. Willner,"Pre-Conversion Phase Modulation of Input Differential Phase-Shif-Keying Signals for Wavelength Conversion and Multicasting Applications using Phase-Modulated Pumps," **Optics Letters,** vol. **36**, pp.731-733, 2011.

213. Jian Wang, Hao Huang, Xue Wang, Jeng-Yuan Yang, and Alan E. Willner, "Multi-Channel 100-Gbit/s DQPSK Data Exchange using Bidirectional Degenerate Four-Wave Mixing," **Optics Express**, vol. **19**, pp. 3332-3338, 2011.

REFEREED JOURNAL PAPERS: (CONTINUED)

214. Lin Zhang, Yang Yue, Raymond G. Beausoleil, and Alan E. Willner, "Analysis and Engineering of Chromatic Dispersion in Silicon Waveguide Bends and Ring Resonators," **Optics Express**, vol. **19**, pp. 8102-8107, 2011.

215. H. Chaouch, E. Parsons, A. Tervonen, M. Mattila, W. Weiershausen, T. von Lerber, S. Honkanen, J.-Y. Yang, A.E. Willner, and F. Küppers, "All-optical processing of RZ-DPSK signals using counter-propagating pulses in a saturated SOA," **Optics Communications,** vol. 284, pp. 2576-2580, 2011.

216. Xiaoxia Wu, Jeffrey A. Jargon, Loukas Paraschis, and Alan E. Willner, "ANN-Based Optical Performance Monitoring of QPSK Signals using Parameters Derived from Balanced-Detected Asynchronous Diagrams," **IEEE Photonics Technology Letters,** vol. **23**, pp. 248-250,2011.

217. Jian Wang, Zahra Bakhtiari, Omer F. Yilmaz, Scott Nuccio, Xiaoxia Wu, and Alan E. Willner, "10 Gbit/s Tributary Channel Exchange of 160 Gbit/s Signals using Periodically Poled Lithium Niobate," **Optics Letters**, vol. **36**, pp. 630-632, 2011.

218. Caroline P. Lai, Jeng-Yuan Yang, Ajay S. Garg, Michael S. Wang, Mohammad R. Chitgarha, Alan E. Willner, Keren Bergman,"Experimental Demonstration of Packet-Rate 10-Gb/s OOK OSNR Monitoring for QoS-Aware Cross-Layer Packet Protection," **Optics Express**, vol. **19**, pp. 14871-14882, 2011.

219. S.R. Nuccio, O.F. Yilmaz, X. Wang, H. Huang, J. Wang, X. Wu, and A.E. Willner, "Higher-Order Dispersion Compensation to Enable a 3.6-μs Wavelength Transparent Delay of a 100-Gb/s DQPSK Signal," **Optics Letters**, vol. **35**, pp.2985-2987, 2010.

220. Yang Yue, Lin Zhang, Jian Wang, Raymond G. Beausoleil, and Alan E. Willner, "Highly Efficient Nonlinearity-Reduction in Silicon-on-Insulator Waveguide using Vertical Slots," **Optics Express**, vol. **18**, pp. 22061-22066, 2010.

221. Jian Wang, Scott R. Nuccio, Hao Huang, Xue Wang, Jeng-Yuan Yang, and Alan E. Willner, "Optical Data Exchange of 100-Gbit/s DQPSK Signals," **Optics Express**, vol.**18**, pp. 23740-23745, 2010.

222. L. Zhang, Y. Yue, R.G. Beausoleil, and A.E. Willner, "Flattened Dispersion in Silicon Slot Waveguides," **Optics Express**, vol. **18**, pp. 20529-20534, 2010.

223. Jian Wang, Zahra Bakhtiari, Scott R. Nuccio, Omer F. Yilmaz, Xiaoxia Wu, and Alan E. Willner, "Phase-Transparent Optical Data Exchange of 40-Gbit/s Differential Phase-Shift Keying Signals," **Optics Letters**, vol. **35**, pp. 2979-2981, 2010.

224. Devang Parekh, Bo Zhang, Xiaoxue Zhao, Yang Yue, Werner Hofmann, Markus C. Amann, Alan Willner, and Connie J. Chang-Hasnain, "Long Distance Single-mode Fiber Transmission of Multimode VCSELs by Injection Locking," **Optics Express**, vol. **18**, pp.20552-20557, 2010.

225. Xiaoxia Wu, Jian Wang, Omer F. Yilmaz, Scott R. Nuccio, Antonella Bogoni, and Alan E. Willner, "Bit-Rate-Variable and Order-Switchable Optical Multiplexing of High-Speed Pseudorandom BitSequence using Optical Delays," **Optics Letters**, vol. **35**, pp. 3042-3044, 2010.

226. Jian Wang, Omer F. Yilmaz, Scott R. Nuccio, Xiaoxia Wu, Alan E. Willner, "Orthogonal Tributary Channel Exchange of 160-Gbit/s Pol-Muxed DPSK Signal," **Optics Express**, vol. **18,** pp. 16995-17008, 2010.

227. Xiaoxia Wu, Antonella Bogoni, Omer F. Yilmaz, Scott Nuccio, Jian Wang, and Alan E. Willner, "Eightfold 40-320 Gbit/s Phase-Coherent Multiplexing and 320-40 Gbit/s Demultiplexing using Highly Nonlinear Fibers," **Optics Letters**, vol. **35**, pp. 1896-1898, 2010.

228. Antonella Bogoni, Xiaoxia Wu, Zahra Bakhtiari, Scott Nuccio, and Alan E. Willner, "640 Gbit/s Photonic Logic Gates," **Optics Letters**, vol. **35**, pp. 3955-3957, 2010.

REFEREED JOURNAL PAPERS: (CONTINUED)

229. Scott Nuccio, Omer Yilmaz, Xue Wang, Jian Wang, Xiaoxia Wu, Alan Willner,"Continuously Tunable 1.16-μs Optical Delay of 100-Gb/s DQPSK and 50-Gb/s DPSK Signals using Wavelength Conversion and Chromatic Dispersion," **Optics Letters**, vol. **35**, no. 11, pp. 1819-1821, 2010.

    **** Selected by editors as one of two papers for the May 2010 OSA Spotlight in Optics. ****

230. X. Wu, A. Bogoni, O.F. Yilmaz, S. Nuccio, J. Wang, and A.E. Willner, "Eightfold 40-320 Gbit/s Phase-Coherent Multiplexing and 320-40 Gbit/s Demultiplexing using Highly Nonlinear Fibers," **Optics Letters**, vol. **35**, no. 11, pp. 1896-1898, 2010.

231. L. Zhang, Y. Yue, Y. Xiao-Li, J. Wang, R.G. Beausoleil, and A.E. Willner, "Flat and Low Dispersion in Highly Nonlinear Slot Waveguides," **Optics Express**, vol. **18**, no. 12, pp. 13187-13193, 2010.

232. Y. Yue, L. Zhang, J.-Y. Yang, R.G. Beausoleil, and A.E. Willner, "Silicon-on-Insulator Polarization Splitter using Two Horizontally-Slotted Waveguides," **Optics Letters**, vol. **35**, no. 9, pp. 1364-1366, 2010.

233. O.F. Yilmaz, S.R. Nuccio, X. Wu, and A.E. Willner, "40 Gb/s Optical Packet Buffer using Conversion/Dispersion Based Delays," **IEEE/OSA Journal of Lightwave Technology, Special Issue on the Conference on Optical Fiber Communications,** vol. **28**, no. 4, pp. 616-623, 2010.

234. X. Wu, A. Bogoni, S. Nuccio, O.F. Yilmaz, M. Scaffardi, and A.E. Willner, "High-Speed Optical WDM-to-TDM Conversion using Fiber Nonlinearities," **IEEE Journal of Selected Topics in Quantum Electronics,** vol. **16**, pp. 1441-1447, 2010.

235. Jian Wang, Scott Nuccio, Xiaoxia Wu, Omer Yilmaz, Lin Zhang, Irfan Fazal, Jeng-Yuan Yang, Yang Yue, Alan Willner, "40 Gbit/s Optical Data Exchange Between Wavelength-Division-Multiplexed Channels using a Periodically Poled Lithium Niobate Waveguide," **Optics Letters**, vol. **35**, no. 7, pp. 1067-1069, 2010**.**

236. Jeffrey A. Jargon, Xiaoxia Wu, Hyeon Yeong Choi, Yun C. Chung, and Alan E. Willner, "Optical Performance Monitoring of QPSK Data Channels by Use of Neural Networks Trained with Parameters Derived from Asynchronous Constellation Diagrams," **Optics Express**, vol. **18**, no. 5, pp. 4931-4938, 2010.

237. Avi Zadok, Xiaoxia Wu, Jacob Sendowski, Amnon Yariv, and Alan E. Willner, "Reconfigurable Generation of High-Order Ultra-Wideband Waveforms using Edge Detection," **IEEE/OSA Journal of Lightwave Technology**, vol. **28**, pp. 2207-2212, 2010.

238. Y.K. Lize, J.-Y. Yang, L.C. Christen, P. Saghari, S. Nuccio, T. Wu, N. Godbout, and A.E. Willner, "Mach-Zehnder Interferometer-Assisted Monitoring of OSNR, Chromatic and Polarization Mode Dispersion for NRZ-OOK, NRZ-DPSK and Optical Duobinary," **IEEE/OSA Journal of Lightwave Technology.**

239. S.R. Nuccio, O.F. Yilmaz, X. Wu, and A.E. Willner, "Fine Tuning of Conversion/Dispersion Based Optical Delays with a 1-pm Tunable Laser using Cascaded Acousto-Optic Mixing," **Optics Letters**, vol. **35**, pp. 523-525, 2010.

240. M. Song, L. Zhang, R.G. Beausoleil, and A.E. Willner, "Nonlinear Distortion in a Silicon Microring-Based Electro-Optic Modulator for Analog Optical Links," **IEEE Journal of Selected Topics in Quantum Electronics**, Special Issue on Silicon Photonics, vol. **16**, no. 1, pp. 185-191, 2010.

241. Lin Zhang, Yunchu Li, Jeng-Yuan Yang, Muping Song, Raymond G. Beausoleil and Alan E. Willner, "Silicon-Based Microring Resonator Modulators for Intensity Modulation" **IEEE Journal of Selected Topics in Quantum Electronics**, Special Issue on Silicon Photonics, vol. **16**, no. 1, pp. 149-158, 2010.

REFEREED JOURNAL PAPERS: (CONTINUED)

242. Avi Zadok, Xiaoxia Wu, Jacob Sendowski, Amnon Yariv, and Alan E. Willner, "Photonic Generation of Ultra-Wideband Signals via Pulse Compression in a Highly Nonlinear Fiber," **IEEE Photonics Technology Letters,** vol. **22**, pp. 239-241, 2010.

243. X. Wu, S. Nuccio, O.F. Yilmaz, J. Wang, A. Bogoni, and A.E. Willner, "Controllable Optical Demultiplexing using Continuously Tunable Optical Parametric Delay at 160-Gbit/s with <0.1 ps Resolution," **Optics Letters,** vol. **34**, pp. 3926-3928, 2009.

244. Scott R. Nuccio, Omer F. Yilmaz, Salman Khaleghi, Xiaoxia Wu, Louis Christen, Irfan Fazal, and Alan E. Willner, "Tunable 503 ns Optical Delay of 40-Gb/s RZ-OOK and RZ-DPSK using a Wavelength Scheme for Phase Conjugation to Reduce Residual Dispersion and Increase Delay," **Optics Letters**, vol. **34**, no. 12, pp. 1903-1905, 2009.

245. Jeng-Yuan Yang, Lin Zhang, Yang Yue, Janet Jackel, Anjali Agarwal, Loukas Paraschis, and Alan E. Willner, "CD-Insensitive PMD Monitoring of a High-Speed Polarization-Multiplexed Data Channel," **Optics Express**, vol. **17**, pp. 18171-18177, 2009.

246. J.-Y. Yang, L. Zhang, Y. Yue, V. R. Arbab, A. Agarwal, L. Paraschis, and A. E. Willner, "Optical Signal-to-Noise Ratio Monitoring of an 80-Gb/s Polarization-Multiplexed Return-to-Zero Differential Phase-Shift Keying Channel," **Optics Letters**, vol. 34, no. 7, pp. 1006-1008, 2009.

247. W. Peng, K. Feng, and A.E. Willner, "Ultimate Sensitivity for Optically-Preamplified Direct-Detected OFDM Systems using Spectrally Matched Optical Filters," **IEEE Photonics Technology Letters,** vol. **21**, pp. 1764-1766, 2009.

248. Yang Yue, Lin Zhang, Muping Song, Raymond G. Beausoleil, and Alan E. Willner, "Higher-Order-Mode Assisted Silicon-on-Insulator 90 Degree Polarization Rotator," **Optics Express**, vol. **17**, pp. 20694-20699 2009.

249. Antonella Bogoni, Xiaoxia Wu, Irfan Fazal, Alan E. Willner, "160 Gb/s Time-Domain Channel Extraction/ Insertion and All-Optical Logic Operations Exploiting a Single PPLN Waveguide," **IEEE/OSA Journal of Lightwave Technology**, vol. **27**, pp. 4221-4227, 2009.

250. Xiaoxue Zhao, Bo Zhang, Louis Christen, Devang Parekh, Werner Hofmann, Markus C. Amann, Fumio Koyama, Alan E. Willner, and Connie J. Chang-Hasnain,"Greatly Increased Fiber Transmission Distance with an Optically Injection-Locked Vertical-Cavity Surface-Emitting Laser," **Optics Express**, vol. **17**, pp. 13785-13791, 2009.

251. Lin Zhang, Yang Yue, Yinying Xiao-Li, Raymond G. Beausoleil, and Alan E. Willner, "Highly Dispersive Slot Waveguides," **Optics Express**, vol. **17**, no. 9, pp. 7095-7101, 2009.

252. W. Peng, B. Zhang, K. Feng, X. Wu, A.E. Willner, and S. Chi, "Spectrally Efficient Direct-Detected OFDM Transmission Incorporating a Tunable Frequency Gap and an Iterative Detection Techniques," **IEEE/OSA Journal of Lightwave Technology,** vol. **27**, pp. 5723-5735, 2009.

253. Xiaoxia Wu, Jeffrey Jargon, Ronald A. Skoog, Loukas Paraschis, Alan Willner, "Applications of Artificial Neural Networks in Optical Performance Monitoring," **IEEE/OSA Journal of Lightwave Technology**, Special Issue on Signal Processing, vol. **27**, pp. 3580-3589, 2009.

254. Antonella Bogoni, Xiaoxia Wu, Irfan Fazal, Alan E. Willner, "Photonic Processing of 320 Gbits/s Based on Sum-/Difference-Frequency Generation and Pump Depletion in a Single PPLN Waveguide," **Optics Letters**, vol. **34**, no. 12, pp. 1825-1827, 2009.

REFEREED JOURNAL PAPERS: (CONTINUED)

255. Xiaoxia Wu, Wei-Ren Peng, Vahid Arbab, Jian Wang, and Alan Willner, "Tunable Optical Wavelength Conversion of OFDM Signal using a Periodically-Poled Lithium Niobate Waveguide," **Optics Express**, vol. **17**, no. 11, pp. 9177-9182, 2009.

256. C. Yu, Y. Wang, Z. Pan, T. Luo, S. Kumar, B. Zhang, and A.E. Willner, "Carrier-Suppressed 160-GHz Pulse-Train Generation using a 40-GHz Phase Modulator with Polarization-Maintaining Fiber," **Optics Letters**, vol. **34**, pp. 1657-1659, 2009.

257. Wei-Ren Peng, Xiaoxia Wu, Kai-Ming Feng, Vahid R. Arbab, Bishara Shamee, Jeng-Yuan Yang, Louis C. Christen, Alan E. Willner, and Sien Chi, "Spectrally Efficient Direct-Detected OFDM Transmission Employing an Iterative Estimation and Cancellation Technique," **Optics Express**, vol. **17**, no. 11, pp. 9099-9111, 2009.

258. Wei-Ren Peng, Xiaoxia Wu, Vahid R. Arbab, Kai-Ming Feng, Bishara Shamee, Louis C. Christen, Jeng-Yuan Yang, Alan E. Willner, and Sien Chi, "Theoretical and Experimental Investigations of a Direct-Detected RF-Tone Assisted Optical OFDM System," **IEEE/OSA Journal of Lightwave Technology**, vol. **27**, no. 10, pp. 1332-1339, 2009.

259. Bo Zhang, Xiaoxue Zhao, Devang Parekh, Yang Yue, Werner Hofmann, Markus C. Amann, Connie J. Chang-Hasnain, and Alan E. Willner, "Reconfigurable Multifunctional Operation using Optical Injection-Locked VCSELs," **IEEE/OSA Journal of Lightwave Technology,** vol. **27**, pp. 2958-2963, 2009.

260. Louis Christen, Omer F. Yilmaz, Scott Nuccio, Xiaoxia Wu, Irfan Fazal, AlanE. Willner, Carsten Langrock, and Martin M. Fejer, "Tunable 105 ns Optical Delay for 80 Gb/s RZ-DQPSK, 40 Gb/sRZ-DPSK, and 40 Gb/s RZ-OOK Signals using Wavelength Conversion and Chromatic Dispersion," **Optics Letters**, vol. **34**, no. 4, pp. 542-544, 2009.

261. Wei-Ren Peng, Kai-Ming Feng, Alan E. Willner, and Sien Chi, "Estimation of the Bit Error Rate for Direct-Detected OFDM Signals with Optically Pre-amplified Receivers," **IEEE/OSA Journal of Lightwave Technology,** vol. **27**, no. 10, pp. 1340-1346, 2009.

262. Wei-Ren Peng, Bo Zhang, Xiaoxia Wu, Kai-Ming Feng, Alan E. Willner, and Sien Chi, "Compensation for I/Q Imbalances and Bias Deviation of the Mach-Zehnder Modulators in Direct-Detected Optical OFDM Systems," **IEEE Photonics Technology Letters,** vol. **21**, no. 2, pp. 103-105, 2009.

263. L. Zhang, Y. Li, M. Song, J.-Y. Yang, R. G. Beausoleil and A. E. Willner, "Silicon Microring-Based Signal Modulation for Chip-Scale Optical Interconnection," **Journal of Applied Physics-A** (A Springer Verlag Journal), Special Issue on Photonic Interconnects, vol. 95, pp. 1089-1100, 2009.

264. Xiaoxia Wu, Antonella Bogoni, Mirco Scaffardi, Gianluca Berrettini, Paolo Ghelfi, Luca Potì, Gianluca Meloni and Alan E. Willner, "Multiplexing Two 40-Gb/s WDM Signals into an 80-Gb/s Signal using XPM in a 0.8-meter Bi-HNLF," **Electronics Letters**, vol. **45**, no. 5, pp. 281-282, 2009.

265. Jeffrey A. Jargon, Xiaoxia Wu, and Alan E. Willner, "Optical Performance Monitoring using Artificial Neural Networks Trained with Eye-Diagram Parameters," **IEEE Photonics Technology Letters**, vol. **21**, no. 1, pp. 54-56, 2009.

266. Yunchu Li, Lin Zhang, Raymond G. Beausoleil, P. Daniel Dapkus, and Alan E. Willner, "Optical Data Timing Skews in On-Chip Optical WDM Interconnects," **Optics Communications**, vol. 282, no. 9, pp. 1925-1929, 2009.

267. Bo Zhang, Lianshan Yan, Lin Zhang, and Alan E. Willner, "Multi-Channel SBS Slow Light using Spectrally-Sliced Incoherent Pumping," **IEEE/OSA Journal of Lightwave Technology**, Special Issue on Slow Light, vol. 26, pp. 3763-3769, 2008.

REFEREED JOURNAL PAPERS: (CONTINUED)

268. G.M. Gehring, R.W. Boyd, A.L. Gaeta, D.J. Gauthier, and A.E. Willner, "Fiber-Based Slow-Light Technologies," **IEEE/OSA Journal of Lightwave Technology**, Special Issue on Slow Light, vol. 26, pp. 3752-3762, 2008.

269. O.F. Yilmaz, L. Christen, X. Wu, S.R. Nuccio, I. Fazal, and A.E. Willner "Time-Slot-Interchange of 40 Gb/s Variable Length Optical Packets using Conversion/Dispersion-Based Tunable Delays," **Optics Letters**, vol. **33**, pp. 1954-1956, 2008.

270. X. Wu, L. Christen, O.F. Yilmaz, S.R. Nuccio, and Alan E. Willner, "Optical 10-to-20 and 20-to-40 Gb/s PRBS Data Multiplexing Utilizing Conversion/Dispersion-Based Tunable Optical Delays," **Optics Letters,** vol. **33**, pp. 1518-1520, 2008.

271. L. Zhang, J.-Y. Yang, Y. Li, R.G. Beausoleil and A.E. Willner, "Monolithic Modulator and Demodulator of Differential Quadrature Phase-Shift Keying Signals Based on Silicon Microrings," **Optics Letters**, vol. 33, pp. 1428-1430, 2008.

272. Xiaoxia Wu, Louis Christen, Bo Zhang, Wei-Ren Peng, Jeng-Yuan Yang, Lin Zhang, Scott R. Nuccio, Loukas Paraschis,Jeffrey A. Jargon,and Alan Willner, "Synchronization Monitoring of I/Q Data and Pulse Carving Misalignment for a Parallel-Type RZ-DQPSK Transmitter by Measuring RF Clock Tone/Low Frequency Power," **IEEE Photonics Technology Letters**, vol. **20**, no. 24, pp. 2138-2140, 2008.

273. J.-Y. Yang, L. Zhang, X. Wu, O. Yilmaz, B. Zhang, and A.E. Willner, "All-Optical Chromatic Dispersion Monitoring for Phase-Modulated Signals Utilizing Cross-Phase Modulation in a Highly-Nonlinear Fiber," **IEEE Photonics Technology Letters**, vol. **20**, no. 19, pp. 1642-1644, 2008.

274. Yunchu Li, Lin Zhang, Muping Song, Bo Zhang, Jeng-Yuan Yang, Raymond G. Beausoleil, Alan E. Willner, and P. Daniel Dapkus, "Coupled-Ring-Resonator-Based Silicon Modulator for Enhanced Performance," **Optics Express**, vol. **16**, no. 17, pp. 13342-13348, 2008.

275. X. Steve Yao, Bo Zhang, Xiaojun Chen, and Alan E. Willner, "Real-time Optical Spectrum Analysis of a Light Source using a Polarimeter," **Optics Express**, vol. **16**, no. 22, pp. 17854-17863, 2008.

276. Moshe Nazarathy, Xiang Liu, Louis Christen, Yannick Keith Lize, and Alan Willner, "Self-Coherent Multi-Symbol Detection of Optical Differential Phase-Shift-Keying," **IEEE/OSA Journal of Lightwave Technology**, vol. **26**, no. 13, pp. 1921-1934, 2008.

277. L. Zhang, M. Song, T. Wu, L. Zou, R. G. Beausoleil and A. E. Willner, "Embedded Ring Resonators for Micro-Photonic Applications," **Optics Letters**, vol. **33**, no. 17, pp. 1978-1980, 2008.

278. Y.K. Lize, X. Wu, M. Nazarathy, Y. Atzmon, L. Christen, S.R. Nuccio, M. Faucher, N. Godbout, Nicolas, and A.E. Willner, "Chromatic Dispersion Tolerance in Optimized NRZ-, RZ- and CSRZ-DPSK Demodulation," **Optics Express**, vol. **16**, pp. 4228-4236, 2008.

279. L. Christen, Y.K. Lize, S.R. Nuccio, A.E. Willner, and L. Paraschis, "Variable Rate, Multi-Format Receiver Design for 10 to 40 Gb/s DPSK and OOK Formats," **Optics Express**, vol. **16**, pp. 3828-3833 2008.

280. L. Zhang, Y. Li, M. Song, R.G. Beausoleil and A.E. Willner, "Data Quality Dependencies in Microring-Based DPSK Transmitters and Receivers," **Optics Express**, vol. **16**, pp. 5739-5745, 2008.

281. L. Christen, Y.K. Lize, S.R. Nuccio, L. Paraschis, and A.E. Willner, "Experimental Demonstration of Reduced Complexity 43-Gb/s RZ-DQPSK Rate-Tunable Receiver," **IEEE Photonics Technology Letters**, vol. **20**, pp. 1166-1168, 2008.

REFEREED JOURNAL PAPERS: (CONTINUED)

282. L. Zhang, T. Luo, Y. Yue and A. E. Willner, "High Group Birefringence in Photonic Crystal Fibers with Both Positive and Negative Phase Birefringences," **Journal of Optics A: Pure and Applied Optics**, vol. **10**, pp. 035004-035007, 2008.

283. B. Zhang, L.-S. Yan, L. Zhang, S. Nuccio, L.C. Christen, T. Wu, and A.E. Willner, "Spectrally-Efficient Slow Light using Multi-level Phase-Modulated Formats," **Optics Letters**, vol. **33**, no. 1, pp. 55-57, 2008.

284. J.-Y. Yang, L. Zhang, L. C. Christen, B. Zhang, S. Nuccio, X. Wu, L.-S. Yan, S. Yao, and A. E. Willner, "Polarization-Mode-Dispersion Monitoring for Phase-Modulated Signals using DGD-GeneratedInterferometric Filter," **IEEE Photonics Technology Letters**, vol. **20**, pp. 150-152, 2008.

285. Irfan Fazal, Saurabh Kumar, Yunchu Li, Louis Christen, Omer F. Yilmaz, P. Saghari, Carsten Langrock, and Martin M. Fejer, and Alan E. Willner, "SOA-Assisted Data-Polarization-Insensitive Wavelength Conversion in a PPLN Waveguide." **IEEE/OSA Journal of Lightwave Technology**, vol. **26**, pp. 1690-1695, 2008.

286. A.E. Willner, "All Mirrors are not Created Equal," **Nature Photonics**, vol. **1**, no. 2, pp. 87-88, 2007.

    **** Selected as one of the 2007 Highlights in Nature Photonics by its editors. ****

287. Lin Zhang, Ting Luo, Yang Yue, Changyuan Yu and Alan E. Willner, "Photosensitivity-Enabled Dispersion Controllability for Quasi-Phase-Matching in Photonic Crystal Fibers," **Optics Letters,** vol. **32**, no. 24, pp. 3498-3500, 2007.

288. C. Yu, T. Luo, L. Zhang, and A.E. Willner, "Data Pulse Distortion Induced by a Slow Light Tunable Delay Line in Optical Fiber," **Optics Letters**, vol. **32**, no. 1, pp. 20-22, 2007.

289. B. Zhang, D. Leuenberger, M.-C. M Lee, A.E. Willner, and M.C. Wu, "Experimental Demonstration of Dynamic Bandwidth Allocation using a MEMS-Actuated Bandwidth-Tunable Microdisk Resonator Filter," **IEEE Photonics Technology Letters,** vol. **19**, pp. 1508-1510, 2007.

290. Poorya Saghari, P. Kamath, Vahid R. Arbab, Mahta Haghi, Alan E. Willner, Joe A. Bannister, and Joe D. Touch, "Experimental Demonstration of an Interference Avoidance Protocol (Transmission Scheduling) in O-CDMA Networks," **Optics Express**, vol. **15**, no. 25, pp. 16442-16447, 2007.

291. Yannick Keith Lizé, Louis Christen, Moshe Nazarathy, Yuval Atzmon, Scott Nuccio, Poorya Saghari, Robert Gomma, Jeng-Yuan Yang, Raman Kashyap, Alan E. Willner, and Loukas Paraschis, "Tolerances and Receiver Sensitivity Penalties of Multibit Delay Differential-Phase-Shift-Keying Demodulation," **IEEE Photonics Technology Letters**, vol. **19**, pp. 1874-1876, 2007.

292. Y.K. Lizé, L. Christen, J.-Y. Yang, P. Saghari, S. Nuccio, A.E. Willner, and R. Kashyap, "Independent and Simultaneous Monitoring of Chromatic and Polarization-Mode Dispersion in OOK and DPSK Transmission," **IEEE Photonics Technology Letters,** vol. **19**, pp. 3-5, 2007.

293. Lin Zhang, Jengyuan Yang, Muping Song, Yunchu Li, Bo Zhang, Ray G. Beausoleil, and Alan E. Willner, "Microring-Based Modulation and Demodulation of DPSK Signals," **Optics Express**, vol. **15**, pp. 11564-11569, 2007.

294. Irfan Fazal, Omer Yilmaz, Scott Nuccio, Bo Zhang, Alan E. Willner, Carsten Langrock, Martin M. Fejer, "Optical Data Packet Synchronization and Multiplexing using a Tunable Optical Delay Based on Wavelength Conversion and Inter-Channel Chromatic Dispersion," **Optics Express**, vol. **15**, no. 17, pp. 10492-10497, 2007.

REFEREED JOURNAL PAPERS: (CONTINUED)

295. S. Kumar, B. Zhang and A. E. Willner, "Impact of Operational Parameters on Optimum Performance of SOA-Based Differential-Mode Wavelength Converters," **IEEE Photonics Technology Letters**, vol. **19**, pp. 1538-1540, 2007.

296. Vahid R. Arbab, Poorya Saghari, Mahta Haghi, Paniz Ebrahimi, and Alan E. Willner, "Increasing the Bit Rate in OCDMA Systems using Pulse Position Modulation Techniques," **Optics Express**, vol. **15**, pp. 12252-12257, 2007.

297. M. Nazarathy, X. Liu, L. Christen, Y. Lize, and A. Willner, "Self-Coherent Decision-Feedback-Directed 40-Gb/s DQPSK Receiver," **IEEE Photonics Technology Letters**, **vol**. 19, pp. 828-830, 2007.

298. Lin Zhang, Ting Luo, Changyuan Yu, Wen Zhang, and Alan E. Willner, "Pattern Dependence of Data Distortion in Slow-Light Elements," **IEEE/OSA Journal of Lightwave Technology**, vol. **25**, pp. 1754-1760, 2007.

299. P. Ebrahimi, R. Jones, Y. Wang, L. Yan, T. Mader, M. Paniccia, A. E. Willner, L. Paraschis, "A 10-Gbit/s EML Link using Detuned Narrowband Optical Filtering," **Optics Express**, vol. **15**, pp. 10597-10606, 2007.

300. B. Zhang, L.-S. Yan, J.-Y. Yang, I. Fazal, and A.E. Willner, "A Single Slow-Light Element for Independent Delay Control and Synchronization on Multiple Gb/s Data Channels," **IEEE Photonics Technology Letters,** vol. **19**, pp. 1081-1083, 2007.

301. Y. Wang, S. Hu, L.-S. Yan, J.-Y. Yang, and A.E. Willner, "Chromatic Dispersion and Polarization Mode Dispersion Monitoring for Multi-level Intensity and Phase Modulation Systems," **Optics Express**, vol. **15**, pp. 14038-14043, 2007.

302. Yannick Keith Lize, Louis Christen, Moshe Nazarathy, Scott Nuccio, Xiaoxia Wu, Alan E. Willner, Raman Kashyap, "Combination of Optical and Electronic Logic Gates for Error Correction in Multipath Differential Demodulation," **Optics Express**, vol. **15**, no. 11, pp. 6831-6839, 2007.

303. B. Zhang, L. Zhang, L.-S. Yan, I. Fazal, J.-Y. Yang, and A.E. Willner, "Continuously-Tunable, Bit-rate Variable OTDM using Broadband SBS Slow-Light Delay Line," **Optics Express**, vol. **15**, pp. 8317-8322, 2007.

304. Y. Wang, C. Yu, L.-S. Yan, A.E. Willner, R. Roussev, C. Langrock, M.M. Fejer, Y. Okawachi, J.E. Sharping, and A.L. Gaeta, "44-ns Continuously-Tunable Dispersionless Optical Delay Elementusing a PPLN Waveguide With a Two Pump Configuration, DCF, and a Dispersion Compensator," **IEEE Photonics Technology Letters**, vol. **19**, pp. 861-863, 2007.

305. X. Steve Yao, L.-S. Yan, B. Zhang, A.E. Willner, and Junfeng Jiang, "All-Optic Scheme for Automatic Polarization Division Demultiplexing," **Optics Express**, vol. **15**, no. 12, pp. 7407-7414, 2007.

306. Yannick Keith Lizé, Louis Christen, Xiaoxia Wu, Jeng-Yuan Yang, Scott Nuccio, Teng Wu, Alan E. Willner, Raman Kashyap, "Free Spectral Range Optimization of Return-to-Zero Differential Phase Shift Keyed Demodulation in the Presence of Chromatic Dispersion," **Optics Express**, vol. **15**, no. 11, pp. 6817-6822, 2007.

307. John E. McGeehan, Saurabh Kumar, and Alan E. Willner, "Simultaneous Optical Digital Half-Subtraction and -Addition using SOAs and a PPLN Waveguide," **Optics Express**, vol. **15**, no. 9, pp. 5543-5549, 2007.

308. Zhaoming Zhu, Andrew M. Dawes, Daniel J. Gauthier, Lin Zhang, and Alan E. Willner, "Broadband SBS Slow Light in an Optical Fiber," **IEEE/OSA Journal of Lightwave Technology**, Special Issue on 2006 Conference on Optical Fiber Communications, vol. **25**, no. 1, pp. 201-206, 2007.

REFEREED JOURNAL PAPERS: (CONTINUED)

309. Bo Zhang, Lianshan Yan, Irfan Fazal, Lin Zhang, Alan E. Willner, Zhaoming Zhu, and Daniel J. Gauthier, "Slow Light on Gbit/s Differential-Phase-Shift-Keying Signals," **Optics Express**, vol. **15**, no. 4, pp. 1878-1883, 2007.

310. Bo Zhang, Saurabh Kumar, Lianshan Yan, and Alan E. Willner, "Extinction Ratio Enhancement of SOA-based Delayed-Interference Signal Converter using Detuned Filtering," **Optics Communications**, vol. **280**, pp. 202-205, 2007.

311. C. Yu, Z. Pan, T. Luo, Y. Wang, L. Christen, and A.E. Willner, "Beyond 40-GHz Return-to-Zero Optical Pulse Train Generation using a Phase Modulator and Polarization-Maintaining Fiber," **IEEE Photonics Technology Letters,** vol. **19**, pp. 42-44, 2007.

312. Y.K. Lize, R. Gomma, R. Kashyap, L. Palmer, and A.E. Willner, "Fast All-Optical Polarization Scrambling using Re-entrent Lefevre Controller," **Optics Communications**, vol. **279**, pp. 50-52, 2007.

313. J.E. McGeehan, M. Giltrelli, and A.E. Willner, "All-Optical Digital 3-Input AND Gate using Sum- and Difference-Frequency Generation in a PPLN Waveguide," **Electronics Letters**, vol. **43**, no. 7, pp. 409-410, 2007.

314. Saurabh Kumar, Alan E. Willner, Deniz Gurkan, Krishnan R. Parameswaran, and Martin M. Fejer, "All-Optical Half Adder using an SOA and a PPLN Waveguide for Signal Processing in Optical Networks," **Optics Express**, vol. **14**, no. 22, pp. 10255-10260, 2006.

315. P. Ebrahimi, K. Yu, M.C. Hauer, A.E. Willner, and O. Solgaard, "Tunable Wavelength Demultiplexer and OCDMA Code-Hopping using a 10-μs-Tuning MEMS-Actuated Gires-Tournois Filter," **IEEE Photonics Technology Letters**, vol. **18**, pp. 1398-1400, 2006.

316. C. Yu, T. Luo, B. Zhang, Z. Pan, M. Adler, Y. Wang, J.E. McGeehan, and A.E. Willner, "Wavelength-Shift-Free 3R Regenerator for 40-Gbit/s RZ System by Optical Parametric Amplification in Fiber," **IEEE Photonics Technology Letters**, vol. 18, no. 24, pp. 2569-2571, 2006.

317. T. Luo, C. Yu, L.-S. Yan, S. Kumar, Z. Pan and A.E. Willner, "Simple Autocorrelation Technique Based on Degree-of-Polarization Measurement," **IEEE Photonics Technology Letters**, vol. **18**, pp. 1606-1608, 2006.

318. L.-S. Yan, X. Steve Yao, and A.E. Willner, "Enabling Hinge Model in Polarization-Mode Dispersion Statistics using Variable Differential-Group-Delay Based Emulator," **IEEE Photonics Technology Letters**, vol. **18**, pp. 427-429, 2006.

319. T. Luo, C. Yu, Z. Pan, Y. Wang, J.E. McGeehan, M. Adler, and A.E. Willner, "All-Optical Chromatic Dispersion Monitoring of a 40-Gbit/s RZ Signal by Measuring the XPM-Generated Optical Tone Power in a Highly-Nonlinear Fiber," **IEEE Photonics Technology Letters**, vol. **18**, pp. 430-432, 2006.

320. Saurabh Kumar and Alan E. Willner, "Simultaneous Four-Wave Mixing and Cross-Gain Modulation for Implementing an All-Optical XNOR Logic Gate using a Single SOA," **Optics Express,** vol. **14**, no. 12, pp. 5092-5097, 2006.

321. L.-S. Yan, X. Steve Yao, C. Yu, G. Xie, Y. Wang, L. Lin, Z. Chen, and A.E. Willner, "High-Speed and Highly Repeatable Polarization-State Generator and Analyzer for 40-Gb/s System Performance Monitoring," **IEEE Photonics Technology Letters**, vol. **18**, pp. 643-645, 2006.

322. R. Khosravani, Y.W. Song, Y. Xie, L.-S. Yan, A. E. Willner, and C. R. Menyuk, "Bit-Pattern-Dependent Polarization Rotation In First-Order PMD-Compensated WDM Systems," **Optics Communications**, vol. **257**, no. 1, pp. 191-196, 2006.

REFEREED JOURNAL PAPERS: (CONTINUED)

323. L.-S. Yan, T. Luo, Q. Yu, Y. Shi, K.-M. Feng, R. Khosravani, and A.E. Willner, "Investigation of Performance Variations Due to the Amplitude of Group-Delay Ripple in Chirped Fiber Bragg Gratings," **Optical Fiber Technology**, Elsevier Publishers, vol. **12**, pp. 238-242, 2006.

324. Y. Wang, C. Yu, T. Luo, L.. Yan, Z. Pan, and A.E. Willner, "Tunable All-Optical Wavelength Conversion and Wavelength Multicasting using Orthogonally-Polarized Fiber FWM," **IEEE/OSA Journal of Lightwave Technology**, Special Issue on Optical Networks, vol. **23**, no. 10, pp. 3331-3338, 2005.

325. L.-S. Yan, X. Steve Yao, Y. Shi, and A.E. Willner, "Simultaneous Monitoring of Both Optical Signal-to-Noise-Ratio and Polarization-Mode-Dispersion using Polarization Scrambling and Polarization-Beam-Splitting," **IEEE/OSA Journal of Lightwave Technology**, Special Issue on Optical Networks, vol. **23**, no. 10, pp. 3290-3294, 2005.

326. J.E. McGeehan, P. Saghari, S.M.R.M. Nezam, A.E. Willner, R. Omrani, and P.V. Kumar, "Experimental Demonstration of OCDMA Transmission using a Three-Dimensional (Time-Wavelength-Polarization) Codeset," **IEEE/OSA Journal of Lightwave Technology**, Special Issue on Optical Networks, vol. **23**, no. 10, pp. 3282-3289, 2005.

327. P. Saghari, R. Gholizadeh, E. Pakbaznia, J.E. McGeehan, S.M.R.Motaghian Nezam, and A.E. Willner, "Experimental and Theoretical Analysis of the Optimum Decision Threshold for Varying Numbers of Active Users in a 2D Time-Wavelength Asynchronous O-CDMA System," **IEEE/OSA Journal of Lightwave Technology**, Special Issue on Optical Networks, vol. **23**, no. 10, pp. 3339-3346, 2005.

328. T. Luo, C. Yu, Z. Pan, Y. Wang, Y. Arieli, and A.E. Willner, "Dispersive Effects Monitoring for RZ Data by Adding a Frequency-Shifted Carrier along the Orthogonal Polarization State," **IEEE/OSA Journal of Lightwave Technology**, Special Issue on Optical Networks, vol. **23**, no. 10, pp. 3295-3301, 2005.

329. K.K. Merchant, J.E. McGeehan, A.E. Willner, S. Ovadia, P. Kamath, J. Touch, and J. Bannister, "Analysis of an Optical Burst Switching Router with Tunable Multiwavelength Recirculating Buffers," **IEEE/OSA Journal of Lightwave Technology**, Special Issue on Optical Networks, vol. **23**, no. 10, pp. 3302-3312, 2005.

330. P. Saghari, R. Omrani, A.E. Willner, and P.V. Kumar**,** "Analytical Interference Model for 2-Dimensional (Time-Wavelength) Asynchronous O-CDMA Systems using Various Receiver Structures," **IEEE/OSA Journal of Lightwave Technology**, Special Issue on Optical Networks, vol. **23**, no. 10, pp. 3260-3269, 2005.

331. Jay E. Sharping, Yoshitomo Okawachi, James van Howe, Chris Xu, Yan Wang, Alan E. Willner, and Alexander L. Gaeta, "All-Optical, Wavelength and Bandwidth Preserving, Pulse Delay Based on Parametric Wavelength Conversion and Dispersion," **Optics Express,** vol. **13**, no. 20, pp. 7872-7877, 2005.

332. L.-S. Yan, Y. Chang, S. Killmeyer, B. Gomatam, R. Talaga, T. Luo, and A.E. Willner, "Performance Enhancement in 10-Gb/s Long-Haul Fiber Links with Adaptive Eye Mapping in an Integrated 16-bit Si-CMOS Transceiver IC," **IEEE Photonics Technology Letters**, vol. **17**, no. 8, pp. 1752-1754, 2005.

333. Zhaoming Zhu, Daniel J. Gauthier Yoshitomo Okawachi, Jay E. Sharping, Alexander L. Gaeta Robert W. Boyd, and Alan E. Willner, "Numerical Study of All-Optical Slow-Light Delays via Stimulated Brillouin Scattering in an Optical Fiber," **Journal of the Optical Society of America B**, vol. **22**, no. 11, pp. 2378-2384, 2005.

334. Lin Zhang, Changxi Yang, Changyuan Yu, Ting Luo, and Alan E. Willner, "PCF-Based Polarization Splitters with Simplified Structures," **IEEE/OSA Journal of Lightwave Technology**, vol. **23**, pp. 3558-3565, 2005.

335. L.-S. Yan, Y. Wang, B. Zhang, C. Yu, J. McGeehan, L. Paraschis, and A. E. Willner, "Reach Extension in 10-Gb/s Directly Modulated Transmission Systems using Asymmetric and Narrowband Optical Filtering," **Optics Express**, vol. **13**, pp. 5106-5115, 2005.

REFEREED JOURNAL PAPERS: (CONTINUED)

336. L.-S. Yan, Y. Shi, and A.E. Willner, "Graphical Solution for RF Half-Wave Voltage and Chirp Parameter of Electro-Optic Modulators using Optical Spectrum Analysis," **IEEE Photonics Technology Letters**, vol. **17**, pp. 1486-1488, 2005.

337. Y.W. Song, S.M.R. Motaghian, Z. Pan, and A.E. Willner, "Efficient DOP Monitoring of WDM Channels for Simultaneous PMD Compensation," **Optics Communications**, vol. 255, pp. 225-229, 2005.

338. L.-S. Yan, C. Yu, Y. Wang, T. Luo, L. Paraschis, Y. Shi, and A.E. Willner, "40-Gbit/s Transmission over 25-km of Negative-Dispersion Fiber using Narrowband Filtering of a Commercial Directly Modulated DFB Laser," **IEEE Photonics Technology Letters**, vol. **17**, pp. 1322-1324, 2005.

339. C. Yu, L.C. Christen, T. Luo, Y. Wang, Z. Pan, L.-S. Yan, and A.E. Willner, "All-Optical XOR Gate Based on Kerr Effect in a Single Highly-Nonlinear Fiber," **IEEE Photonics Technology Letters**, vol. **17**, pp. 1232-1234, 2005.

340. L.-S. Yan, S.M.R.M. Nezam, A.B. Sahin, J.E. McGeehan, T. Luo, Q. Yu, and A.E. Willner, "Performance Optimization of RZ Data Format in WDM Systems using Tunable Pulse-Width Management at the Transmitter," **IEEE/OSA Journal of Lightwave Technology**, vol. **23**, pp. 1063-1067, 2005.

341. R.W. Boyd, D.J. Gauthier, A.L. Gaeta, and A.E. Willner, "Maximum Time Delay Achievable on Propagation Through a Slow-Light Medium," **Physical Review A**, American Physical Society, vol. **71**, manuscript 023801, pp. 1-4, 2005.

342. C. Yu, L.-S. Yan, T. Luo, Y. Wang, Z. Pan, and A.E. Willner, "Width-Tunable Optical Pulse Generation based on Four Wave Mixing in Highly-Nonlinear Fiber," **IEEE Photonics Technology Letters**, vol. **17**, pp. 636-638, 2005.

343. L.-S. Yan, Q. Yu, and A.E. Willner, "Uniformly Distributed States of Polarization on the Poincarè Sphere using an Improved Polarization Scrambling Scheme," **Optics Communications**, vol. **249**, pp. 43-50, 2005.

344. Z. Pan, Q. Yu, Y. Arieli, and A.E. Willner, "The Effects of XPM-Induced Fast Polarization-State Fluctuations on PMD Compensated WDM Systems," **IEEE Photonics Technology Letters**, vol. **16**, pp. 1963-1965, 2004.

345. Y.W. Song, Z. Pan, Y. Arieli, S.M.R. Motaghian, S.A. Havstad, and A.E. Willner, "Immunization of WDM Systems to Nonlinearity-Induced Crosstalk using Optical Polarization-Shift-Keying," **Optics Communications**, vol. **252**, pp. 162-166, 2005.

346. C. Yu, Q. Yu, Z. Pan, A.B. Sahin, and A.E. Willner, "Optically Compensating the PMD-Induced RF Power Fading for Single-Sideband Subcarrier-Multiplexed Systems," **IEEE Photonics Technology Letters**, vol. **16**, pp. 341-343, 2004.

347. T. Luo, Z. Pan, S.M.R. Motaghian Nezam, L.-S. Yan, A.B. Sahin, and A.E. Willner, "PMD Monitoring by Tracking the Chromatic-Dispersion-Insensitive RF Power of the Vestigial Sideband," **IEEE Photonics Technology Letters**, vol. **16**, pp. 2177-2179, 2004.

348. S.M. Reza Motaghian Nezam, J.E. McGeehan, and A.E. Willner, "Theoretical and Experimental Analysis of the Dependence of a Signal's Degree of Polarization on the Optical Data Spectrum," **IEEE/OSA Journal of Lightwave Technology**, vol. **22**, pp. 763-772, 2004.

349. C. Yu, Z. Pan, Y. Wang, Y.W. Song, D. Gurkan, M.C. Hauer, D. Starodubov, and A.E. Willner, "Polarization-Insensitive All-Optical Wavelength Conversion using Dispersion-Shifted Fiber With a Fiber Bragg Grating and a Faraday Rotator Mirror," **IEEE Photonics Technology Letters**, vol. **16**, pp. 1906-1908, 2004.

REFEREED JOURNAL PAPERS: (CONTINUED)

350. Z. Pan, Y.W. Song, C. Yu, Y. Wang, and A. E. Willner, "using Sampled Nonlinearly-Chirped Fiber Bragg Gratings to Achieve 40-Gbit/s Tunable Multi-channel Dispersion Compensation," **Optics Communications**, vol. **241**, pp. 371-375, 2004.

351. T. Luo, L.-S. Yan, Y.Q. Shi, Z. Pan, Y.W. Song, A.E. Willner, and S. Yao, "Tunable Wavelength Spacing Multi-Wavelength Ring Laser using Programmable DGD Module as Intra-Cavity Filter", **IEE Electronics Letters**, vol. **40**, no. 25, pp. 1578–1579, 2004.

352. Z. Pan, Q. Yu, Y. Xie, S. A. Havstad, A. E. Willner, D. S. Starodubov, and J. Feinberg, "Real-time Group-Velocity Dispersion Monitoring and Automated Compensation without Modifications of the Transmitter," **Optics Communications**, vol. **230**, pp. 145-149, 2004.

353. L.-S. Yan, Q. Yu, A.E. Willner, and Y. Shi, "Measurement of the Chirp Parameter of Electro-Optic Modulators by Comparing the Phase Between Two Sidebands," **Optics Letters**, vol. **28**, no.13, pp. 1114-1116, 2003.

354. T. Lu, D.O. Yevick, L.-S. Yan, B. Zhang, and A.E. Willner, "An Experimental Approach to Multicanonical Sampling," **IEEE Photonics Technology Letters**, vol. **16**, pp. 1978-1980, 2004.

355. L.-S. Yan, M.C. Hauer, Y. Shi, X.S. Yao, P. Ebrahimi, Y. Wang, A.E. Willner, and W.L. Kath, "Polarization-Mode-Dispersion Emulator using Variable Differential-Group-Delay (DGD) Elements and Its Use for Experimental Importance Sampling," **IEEE/OSA Journal of Lightwave Technology**, Special Issue on Polarization Mode Dispersion, vol. **22**, pp. 1051-1058, 2004.

356. S.M. Reza Motaghian Nezam, Y.-W. Song, C.-Y. Yu, J.E. McGeehan, A.B. Sahin, and A.E. Willner, "First Order PMD Monitoring for NRZ Data using Optical Clock Regeneration Techniques," **IEEE/OSA Journal of Lightwave Technology**, Special Issue on Polarization Mode Dispersion, vol. **22**, pp. 1086-1093, 2004.

357. M.C. Hauer, Q. Yu, E.R. Lyons, C.H. Lin, A.A. Au, H.P. Lee, and A.E. Willner, "Electrically Controllable All-Fiber PMD Emulator using a Compact Array of Thin-Film Microheaters," **IEEE/OSA Journal of Lightwave Technology**, Special Issue on Polarization Mode Dispersion, vol. **22**, pp. 1059-1065, 2004.

358. S.M. Reza Motaghian Nezam, T. Luo, J.E. McGeehan, and A.E. Willner, "Enhancing the Monitoring Range and Sensitivity in CSRZ Chromatic Dispersion Monitors using a Dispersion-Biased RF Clock Tone," **IEEE Photonics Technology Letters**, vol. **16**, pp. 1391-1393, 2004.

359. M.C. Hauer, J.E. McGeehan, S. Kumar, J. Touch, J. Bannister, E.R. Lyons, C.H. Lin, A.A. Au, H.P. Lee, D.S. Starodubov, and A.E. Willner, "Optically-Assisted Internet Routing using Arrays of Novel Dynamically Reconfigurable FBG-Based Correlators," **IEEE/OSA Journal of Lightwave Technology**, Special Issue on Optical Networks, vol. **21**, pp. 2765-2778, 2003.

360. S.M. Reza Motaghian Nezam, J.E. McGeehan, and A.E. Willner, "Measuring Fiber and Component DGD using Polarized Limited-Bandwidth Optical Sources and Monitoring the DOP," **IEEE Photonics Technology Letters**, vol. **16**, pp. 1694-1696, 2004.

361. S.M.R. Motaghian Nezam, L.-S. Yan, J.E. McGeehan, Y.Q. Shi, A.E. Willner, and X.S. Yao, "Enhancing the Dynamic Range and DGD Monitoring Windows in DOP-based DGD Monitors using Symmetric and Asymmetric Partial Optical Filtering," **IEEE/OSA Journal of Lightwave Technology**, Special Issue on Polarization-Mode-Dispersion, vol. **22**, pp. 1094-1102, 2004.

362. D.C. Kilper, R. Bach, D.J. Blumenthal, D. Einstein, T. Landolsi, L. Ostar, M. Preiss, and A.E. Willner, "Optical Performance Monitoring," **IEEE/OSA Journal of Lightwave Technology**, Special Issue on the Conference on Optical Fiber Communications, vol. **22**, pp. 294-304, 2004.

REFEREED JOURNAL PAPERS: (CONTINUED)

363. D. Gurkan, S. Kumar, A.E. Willner, K.R. Parameswaran, and M.M. Fejer, "Simultaneous Label Swapping and Wavelength Conversion of Multiple Independent WDM Channels in an All-Optical MPLS Network using PPLN Waveguides as Wavelength Converters," **IEEE/OSA Journal of Lightwave Technology**, Special Issue on Optical Networks, vol. **21**, pp. 2739-2745, 2003.

364. J.E. McGeehan, S. Kumar, D. Gurkan, S.M.R. Motaghian Nezam, A.E. Willner, K.R. Parameswaran, M.M. Fejer, J. Bannister, and J. Touch, "All-Optical Decrementing of a Packet's Time-to-Live (TTL) Field and Subsequent Dropping of a Zero-TTL Packet," **IEEE/OSA Journal of Lightwave Technology**, Special Issue on Optical Networks, vol. **21**, pp. 2746-2752, 2003.

365. S.M.R. Motaghian Nezam, J.E. McGeehan, and A.E. Willner, "Degree-of-Polarization-Based PMD Monitoring for Subcarrier-Multiplexed Signals via Equalized Carrier/Sideband Filtering," **IEEE/OSA Journal of Lightwave Technology**, Special Issue on Polarization-Mode-Dispersion, vol. **22**, pp. 1078-1085, 2004.

366. L.-S. Yan, C. Yeh, G. Yang, L. Lin, Z. Chen, Y.Q. Shi, A.E. Willner, and X. Steve Yao, "Programmable Group Delay Module using Binary Polarization Switching," **IEEE/OSA Journal of Lightwave Technology**, vol. **21**, pp. 1676-1684, 2003.

367. Q. Yu, L.-S. Yan, S. Lee, Y. Xie, and A. E. Willner, "Loop-Synchronous Polarization Scrambling Technique for Simulating Polarization Effects using Recirculating Fiber Loops," **IEEE/OSA Journal of Lightwave Technology**, vol. **21**, no. 5, pp. 1593-1600, 2003.

368. L.-S. Yan, M.C. Hauer, P. Ebrahimi, Y. Wang, Y.Q. Shi, X. Steve Yao, A.E. Willner, and W.L. Kath, "Measurement of Q Degradation due to Polarisation Mode Dispersion using Multiple Importance Sampling," **Electronics Letters**, vol. **39**, no. 13, pp. 974-975, 2003.

369. L.-S. Yan, Q. Yu, T. Luo, J. E. McGeehan, and A.E. Willner, "Deleterious System Effects due to Low Frequency Polarization Scrambling in the Presence of Non-Negligible Polarization Dependent Loss," **IEEE Photonics Technology Letters**, vol. **15**, no. 3, pp. 464-466, 2003.

370. J.E. McGeehan, M.C. Hauer, A. B. Sahin, and A.E. Willner, "Multi-Wavelength-Channel Header Recognition for Reconfigurable WDM Networks using Optical Correlators based on Sampled Fiber Bragg Gratings," **IEEE Photonics Technology Letters**, vol. **15**, no. 10, pp. 1464-1466, 2003.

371. Y. Shi, L.-S. Yan, and A.E. Willner, "High-Speed Electro-Optic Modulator Characterization using Optical Spectrum Analysis", **IEEE/OSA Journal of Lightwave Technology**, vol. **21**, pp. 2358-2367, 2003.

372. Z. Pan, Q. Yu, Y. Xie, Y.W. Song, A.E. Willner, "Clock-Tone Regeneration due to Higher Order PMD in NRZ Systems," **IEEE Photonics Technology Letters**, vol. **15**, pp. 338-340, 2003.

373. Y.W. Song, S.M.R.M. Nezam, D.Starodubov, J.E. Rothenberg, Z. Pan, H. Li, R. Wilcox, J. Popelek, R. Caldwell, V. Grubsky, and A.E. Willner, "Tunable Interchannel Broad-Band Dispersion-Slope Compensation for 10-Gb/s WDM Systems using a Non-channelized Third-Order Chirped FBG," **IEEE Photonics Technology Letters**, vol. **15**, No. 1, pp 144-146, 2003.

374. Q. Yu, Z. Pan, L.-S. Yan, and A.E. Willner, "Chromatic Dispersion Monitoring Technique using Sideband Optical Filtering and Clock Phase-Shift Detection," **IEEE/OSA Journal of Lightwave Technology**, Special Issue on 40-Gb/s Lightwave Systems, vol. **20**, no. 12, pp. 2267-2271, 2002.

375. Z. Pan, Y.W. Song, C. Yu, Y. Wang, Q. Yu, J. Popelek, H. Li, Y. Li, and A. E. Willner, "Tunable Chromatic Dispersion Compensation in 40-Gbit/s Systems using Nonlinearly-Chirped Fiber Bragg Gratings," **IEEE/OSA Journal of Lightwave Technology**, Special Issue on 40-Gb/s Lightwave Systems, vol. **20**, no. 12, pp. 2239-2246, 2002.

REFEREED JOURNAL PAPERS: (CONTINUED)

376. Y.W. Song, Z. Pan, S.M.R. Motaghian Nezam, C. Yu, Y. Wang, D. Starodubov, V. Grubsky, J.E. Rothenberg, J. Popelek, H. Li, Y. Li, R. Caldwell, R. Wilcox, and A.E. Willner, "Tunable Dispersion Slope Compensation for 40-Gbit/s WDM Systems using Broadband Non-Channelized 3rd-Order Chirped Fiber Bragg Gratings," **IEEE/OSA Journal of Lightwave Technology**, Special Issue on 40-Gb/s Lightwave Systems, vol. **20**, no. 12, pp. 2259-2266, 2002.

377. L.-S. Yan, Q. Yu, A.B. Sahin, and A.E. Willner, "Differential Group Delay Monitoring used as Feedforward Information for Polarization Mode Dispersion Compensation," **IEEE Photonics Technology Letters**, vol. **14**, pp. 1463 -1465, 2002.

378. M.C. Cardakli and A.E. Willner, "Synchronization of a Network Element for Optical Packet Switching using Optical Correlators and Wavelength Shifting," **IEEE Photonics Technology Letters**, vol. **14**, pp. 1375 - 1377, 2002.

379. Z. Pan, Y. Wang, C. Yu, T. Luo, A.B. Sahin, Q. Yu, and A.E. Willner, "Intrabit Polarization Diversity Modulation for the Mitigation of PMD Effects," **IEEE Photonics Technology Letters**, vol. **14**, pp. 1466 - 1468, 2002.

380. L.-S. Yan, Q. Yu, T. Luo, A. E. Willner, and X. S. Yao, "Compensation of Higher-order PMD using Phase Modulation and Polarization Control in the Transmitter," **IEEE Photonics Technology Letters**, vol. **14**, pp. 858-860, 2002.

381. M. C. Cardakli, A. B. Sahin, O. H. Adamczyk, A. E. Willner, K. R. Parameswaran, and M. M. Fejer, "Wavelength conversion of subcarrier channels using difference frequency generation in a PPLN waveguide," **IEEE Photonics Technology Letters**, vol. 14, no. 9, pp. 1327-1329, 2002.

382. M.C. Cardakli, D. Gurkan, S.A. Havstad, A.E. Willner, K.R. Parameswaran, M.M. Fejer, and I. Brenner, "Tunable All-Optical Time-Slot-Interchange and Wavelength Conversion using Difference-Frequency-Generation and Optical Buffers," **IEEE Photonics Technology Letters**, vol. **14**, no. 2, pp. 200-202, 2002.

383. A.B. Sahin, O.H. Adamczyk, and A.E. Willner, "Dispersion Division Multiplexing in Subcarrier Modulated Data Transmission using Channel-Specific RF Fading," **IEEE Photonics Technology Letters**, vol. **14**, pp. 1190-1192, 2002.

384. Y.W. Song, D. Starodubov, Z. Pan, Y. Xie, A.E. Willner, and J. Feinberg, "Tunable WDM Dispersion Compensation with Fixed Bandwidth and Fixed Passband Center Wavelength using a Uniform FBG," **IEEE Photonics Technology Letters**, vol. **14**, pp. 1193-1195, 2002.

385. M.N. Petersen, Z. Pan, S. Lee, S.A. Havstad, and A.E. Willner, "Online Chromatic Dispersion Monitoring and Compensation using a Single Inband Subcarrier Tone," **IEEE Photonics Technology Letters**, vol. **14**, pp. 570-572, 2002.

386. L.-S. Yan, Q. Yu, and A. E. Willner, "Demonstration of In-Line Monitoring and Compensation of Polarization Dependent Loss for Multiple Channels," **IEEE Photonics Technology Letters**, vol. **14**, pp. 864-866, 2002.

387. Q. Yu and A.E. Willner, "Performance Limits of First-Order PMD Compensators using Fixed and Variable DGD Elements," **IEEE Photonics Technology Letters**, vol. **14**, pp. 304-306, 2002.

388. L.-S. Yan, Q. Yu, Y. Xie, and A. E. Willner, "Experimental Demonstration of the System Performance Degradation due to the Combined Effect of Polarization Dependent Loss with Polarization Mode Dispersion," **IEEE Photonics Technology Letters**, vol. **14**, no. 2, pp. 224-226, 2002.

REFEREED JOURNAL PAPERS: (CONTINUED)

389. O.H. Adamczyk, A.B. Sahin, Q. Yu, S. Lee, and A.E. Willner, "Statistics of PMD-Induced Power Fading for Intensity-Modulated Double-Sideband and Single-Sideband Microwave and Millimeter-Wave Signals," **IEEE Transactions on Microwave Theory and Techniques and IEEE/OSA Journal of Lightwave Lightwave Technology**, Joint Special Issue on Microwave and Millimeter-Wave Photonics, vol. **49**, pp. 1962-1967, 2001.

390. R. Khosravani, S.A. Havstad, Y.W. Song, P. Ebrahimi, and A.E. Willner, "Polarization-Mode Dispersion Compensation in WDM Systems," **IEEE Photonics Technology Letters**, vol. **13**, pp. 1370-1372, 2001.

391. Q. Yu, L.-S. Yan, Y. Xie, M. Hauer, and A.E. Willner, "Higher-Order PMD Compensation using a Fixed Time Delay Followed by a Variable Time Delay," **IEEE Photonics Technology Letters**, vol. **13**, pp. 863-865, 2001.

392. Y.W. Song, S.A. Havstad, D. Starodubov, Y. Xie, A.E. Willner, J. Feinberg, "40-nm-wide Tunable Fiber Ring Laser with Single-Mode Operation using A Highly Stretchable FBG," **IEEE Photonics Technology Letters**, vol. **13**, pp. 1167-1169, 2001.

393. I.T. Lima, Jr., E. Ibragimov, R. Khosravani, P. Ebrahimi, C.R. Menyuk, and A.E. Willner, "Comparison on PMD Emulators," **IEEE/OSA Journal of Lightwave Technology**, vol. **19**, pp. 1872-1881, 2001.

394. Y.W. Song, Z. Pan, D. Starodubov, V. Grubsky, E. Salik, S.A. Havstad, Y. Xie, A. E. Willner, and J. Feinberg, "All-Fiber WDM Optical Crossconnect using Ultrastrong Widely-Tunable FBGs," **IEEE Photonics Technology Letters**, vol. **13**, pp. 1103-1105, 2001.

395. M.I. Hayee, M.C. Cardakli, A.B. Sahin, and A.E. Willner, "Doubling of Bandwidth Utilization using Two Orthogonal Polarizations and Power Unbalancing in a Polarization-Division-Multiplexing Scheme," **IEEE Photonics Technology Letters**, vol. **13**, pp. 881-883, 2001.

396. R. Khosravani and A. E. Willner, "System Performance Evaluation in Terrestrial Systems with High Polarization Mode Dispersion and the Effect of Chirping," **IEEE Photonics Technology Letters**, vol. **13**, pp. 296-298, 2001.

397. Y. Xie, Z. Pan, A.E. Willner, E. Salik, V. Grubsky, D. Starodubov, and J. Feinberg, "Spectrally-Efficient L-C Band EDFA Having a Seamless Inter-Band Channel Region using Sampled FBGs" **IEEE Photonics Technology Letters**, vol. **13**, pp. 436-438, 2001.

398. R. Khosravani, I.T. Lima Jr., P. Ebrahimi, E. Ibragimov, A.E. Willner, and C.R. Menyuk, "Time and Frequency Domain Characteristics of Polarization Mode Dispersion Emulators," **IEEE Photonics Technology Letters**, vol. **13**, pp. 127-129, 2001.

399. J.J. Yoo and A.E. Willner, "A Performance and Implementation Comparison of Bidirectional and Dual Bus 2-D WDM Multiple-Plane Optical Interconnections with Row-Column Multihop Network Structure," **IEEE/OSA J. of Lightwave Technology**, vol. **19**, pp. 801-809, 2001.

400. Y. Xie, S. Lee, Z. Pan,J.X. Cai, A.E. Willner, V. Grubsky, D.S. Starodubov, E. Salik, and J. Feinberg, "Tunable Compensation of the Dispersion Slope Mismatch in Dispersion-Managed Systems using a Sampled Nonlinearly-Chirped FBG," **IEEE Photonics Technology Letters**, vol. **12**, pp. 1417–1419, 2000.

401. S.A. Havstad, A.B. Sahin, O.H. Adamczyk, Y. Xie, and A.E. Willner, "Distance-Independent Microwave and Millimeter-Wave Power Fading Compensation using a Phase Diversity Configuration," **IEEE Photonics Technology Letters**, vol. **12**, pp. 1052–1054, 2000.

REFEREED JOURNAL PAPERS: (CONTINUED)

402. R. Khosravani, S. Lee, M.I. Hayee, and A.E. Willner, "Soliton Sampling of Subcarrier Multiplexed Signals to Suppress Dispersion-Induced RF Power Fading," **IEEE Photonics Technology Letters**, vol. **12**, pp. 1275–1277, 2000.

403. O.H. Adamczyk, S.A. Havstad, A.B. Sahin, M.C. Cardakli, S. Lee, and A.E. Willner, "Optical Subcarrier-Multiplexing for Output-Port Contention Resolution," **IEEE Photonics Technology Letters**, vol. **12**, pp. 1567-1569, 2000.

404. M.C. Cardakli, S. Lee, A.E. Willner, V. Grubsky, D. Starodubov, and J. Feinberg, "Reconfigurable All-Optical Packet Header Recognition and Routing using Time-to-Wavelength Mapping and Tunable Fiber Bragg Gratings for Correlation Decoding," **IEEE Photonics Technology Letters**, vol. **12**, pp. 552-554, 2000.

405. H. Sun, M.C. Cardakli, K.-M. Feng, J.-X. Cai, H. Long, M.I. Hayee, and A.E. Willner "Tunable RF-Power-Fading Compensation of Multiple-Channel Double-Sideband SCM Transmission using a Nonlinearly-Chirped FBG," **IEEE Photonics Technology Letters**, vol. **12**, pp. 546-548, 2000.

406. S. Lee, R. Khosravani, J. Peng, V. Grubsky, D.S. Starodubov, A.E. Willner, and J. Feinberg, "Adjustable Compensation of Polarization Mode Dispersion using a High-Birefringence, Nonlinearly-Chirped Fiber Bragg Grating," **IEEE Photonics Technology Letters**, vol. **11**, pp. 1277-1279, 1999.

407. J.-X. Cai, K.-M. Feng, A.E. Willner, V. Grubsky, D.S. Starodubov, and J. Feinberg, "Simultaneous Tunable Dispersion Compensation of Many WDM Channels using a Sampled Nonlinearly-Chirped Fiber-Bragg-Grating," **IEEE Photonics Technology Letters**, vol. **11**, pp. 1455-1457, 1999.

408. M.I. Hayee and A.E. Willner, "Transmission Penalties due to EDFA Gain Transients in Add/Drop Multiplexed WDM Networks," **IEEE Photonics Technology Letters**, vol. **11**, pp. 889-891, 1999.

409. S.A. Havstad B. Fischer A.E. Willner, and M.G. Wickham, "Loop-Mirror Filters Based on Saturable Gain or Absorber Gratings," **Optics Letters**, vol. **24**, pp. 1466-1468, 1999.

410. O.H. Adamczyk, M.C. Cardakli, J.-X. Cai, M.I. Hayee, C. Kim, and A.E. Willner, "Coarse and Fine Bit Synchronization for WDM Interconnections using Two Subcarrier-Multiplexed Control Pilot Tones," **IEEE Photonics Technology Letters**, vol. **11**, pp. 1057-1059, 1999.

411. K.-M. Feng, J.-X. Cai, V. Grubsky, D.S. Starodubov, M.I. Hayee, S. Lee, X. Jiang, A.E. Willner, and J. Feinberg, "Dynamic Dispersion Compensation in a 10-Gb/s Optical System using Novel Voltage Tuned Nonlinearly-Chirped Fiber Bragg Grating," **IEEE Photonics Technology Letters**,vol. **11**, pp. 373-375, 1999.

412. T. Sangsiri, S. Havstad, C. Kim, X. Jiang, B. Hoanca, and A.E. Willner, "Bit Synchronization using Subcarriers for Control Signaling in Optical Networks," **IEEE Photonics Technology Letters**, vol. **11**, pp. 602-604, 1999.

413. M.I. Hayee and A.E. Willner, "NRZ vs. RZ in 10-40 Gb/s Dispersion-Managed WDM Transmission Systems," **IEEE Photonics Technology Letters**, vol. **11**, pp. 991-993, 1999.

414. X. Jiang, M. Cardakli, K.M. Feng, J.X. Cai, A.E. Willner, V. Grubsky, D.S. Starodubov, and J. Feinberg, "Control Monitoring of Routing Bits and Data Packets in WDM Networks using Wavelength-to-Time Mapping," **IEEE Photonics Technology Letters**,vol. **11**, pp. 1186-1188, 1999.

415. R. Khosravani, M.I. Hayee, B. Hoanca, and A.E. Willner, "Reduction of Coherent Crosstalk in WDM Add/Drop Multiplexing Nodes by Bit Pattern Misalignment," **IEEE Photonics Technology Letters**, vol. **11**, pp. 134-136, 1999.

REFEREED JOURNAL PAPERS: (CONTINUED)

416. X. Jiang, X.P. Chen, and A.E. Willner, "All Optical Wavelength Independent Packet Header Replacement using a Long CW Region Generated Directly from the Packet Flag," **IEEE Photonics Technology Letters**, vol. **10**, pp. 1638-1640, 1998.

417. J.J. Yoo, J.E. Leight, C. Kim, G. Giaretta, W. Yuen, A.E. Willner, and C.J. Chang-Hasnain, "Experimental Demonstration of a Multihop Shuffle Network using WDM Multiple-Plane Optical Interconnections with VCSEL and MQW/DBR Detector Arrays," **IEEE Photonics Technology Letters**,vol. **10**, pp. 1507-1509, 1998.

418. W. Shieh, E. Park, and A.E. Willner, "Demonstration of Output-Port Contention Resolution in a WDM Switching Node Based on All-Optical Wavelength Shifting and Subcarrier-Multiplexed Routing Control Headers," **IEEE Photonics Technology Letters**, vol. **9**, pp. 1023-1025, 1997.

419. J.J. Yoo, J.E. Leight, G. Giaretta, W. Yuen, A.E. Willner, and C.J. Chang-Hasnain, "Experimental Demonstration of a 4-Plane 2-D Multiple-Wavelength Optical Interconnection using Integrated VCSEL Arrays And MQW/DBR Detectors," **IEEE Photonics Technology Letters,** vol. **9**, pp. 1646-1648, 1997.

420. X.P. Chen, B. Hoanca, K.-M. Feng, J.-X. Cai, and A.E. Willner, "Experimental Demonstration of Fast Simultaneous Wavelength Switching and Time Demultiplexing using a Nonlinear Optical Loop Mirror," **IEEE Photonics Technology Letters**, vol. **9**, pp. 919-921, 1997**.**

421. M.I. Hayee and A.E. Willner, "Pre- and Post-Compensation of Dispersion and Nonlinearities in 10 Gb/s WDM Systems," **IEEE Photonics Technology Letters**, vol. **9**, pp. 1271-1273, 1997.

422. W. Shieh and A.E. Willner, "A Wavelength-Routing Node using Multifunctional Semiconductor Optical Amplifiers and Multiple-Pilot-Tone-Coded Subcarrier Control Headers," **IEEE Photonics Technology Letters**, vol. **9**, pp. 1268-1270, 1997.

423. D. Norte and A.E. Willner, "Experimental Demonstration of a Multiple-λ Wavelength Shifter for Dynamically Reconfigurable WDM Networks," **IEEE Photonics Technology Letters,** vol. **9**, pp. 922-924, 1997.

424. J.-X. Cai, K.-M. Feng, X.P. Chen, and A.E. Willner, "Equalization of Non-Uniform EDFA Gain using a Fiber Loop Mirror," **IEEE Photonics Technology Letters,** vol. **9**, pp. 916-918, 1997.

425. J.-X. Cai, K.-M. Feng, X.P. Chen, A. E. Willner, D. A. Smith, C.-H. Lee and Y.-J. Chen, "Experimental Demonstration of Dynamic High-Speed Equalization of Three WDM Channels using a Wavelength Demultiplexer and Acousto-Optic Modulators," **IEEE Photonics Technology Letters**, vol. **9**, pp. 678-680, 1997.

426. S.H. Huang, X.Y. Zou, S.-M. Hwang, A.E. Willner, Z. Bao, and D.A. Smith, "Experimental Demonstration of Active Equalization and ASE Suppression of Three 2.5 Gbit/s WDM-Network Channels over 2,500 km using AOTFs as Transmission Filters," **IEEE Photonics Technology Letters,** vol. **9**, pp. 389-391, 1997.

427. J.E. Leight, J. Yoo, and A.E. Willner, "System Design and Performance of Reconfigurable and Simultaneous 2-D Multiple-Plane WDM Optical Interconnects," **IEEElectronics Letters**, vol. **33**, pp. 613-614, 1997.

428. J.-C. Wu, A.E. Willner, and J.A. Silvester, "Protocols to Eliminate Tuning Penalties for Packet-Switched WDM Star Networks with Large Tuning Latency," **Journal of High Speed Networks**, vol. **6**, no. 1, pp. 15-31. (IOS Press), 1997.

429. E. Park and A.E. Willner, "Network Demonstration of Self-Routing Wavelength Packets using an All-Optical Wavelength Shifter and QPSK Subcarrier Routing Control," **IEEE Photonics Technology Letters**, vol. **8**, pp. 938-940, 1996.

REFEREED JOURNAL PAPERS: (CONTINUED)

430. S.H. Huang, X.Y. Zou, S.-M. Hwang, A.E. Willner, Z. Bao, and D.A. Smith, "Experimental Demonstration of Dynamic Network Equalization of Three 2.5 Gbit/s WDM Channels over 1,000 km using Acousto-Optic Tunable Filters," **IEEE Photonics Technology Letters,** vol. **8**, pp. 1243-1245, 1996.

431. D. Norte and A.E. Willner, "Demonstration of an All-Optical Data Format Transparent WDM-to-TDM Network Node With Extinction Ratio Enhancement for Reconfigurable WDM Networks," **IEEE Photonics Technology Letters**, vol. **8**, pp. 715-717, 1996.

432. W. Shieh, E. Park and A.E. Willner, "All-Optical Wavelength Shifting of Microwave Subcarriers by using Four-Wave Mixing in a Semiconductor Optical Amplifier," **IEEE Photonics Technology Letters,** vol. **8**, pp. 524-546, 1996.

433. S.-M. Hwang, X.Y. Zou, S.H. Huang, W. Shieh, and A.E. Willner, "Passive Equalization of Four 2.5-Gbit/s WDM Channels over 1,000 km using Notch Filters," **IEE Electronics Letters**, vol. **32**, pp. 676-677, 1996.

434. D. Norte and A.E. Willner, "Experimental Demonstrations of All-Optical Conversions Between the RZ and NRZ Data Formats Incorporating Noninverting Wavelength Shifting Leading to Format Transparency," **IEEE Photonics Technology Letters,** vol. **8**, pp. 712-714, 1996.

435. W. Shieh, S.H. Huang, and A.E. Willner, "A Polarization-Independent and Contrast-Ratio-Enhancing Module for All-Optical Wavelength Shifting using SOA's," **IEEE Photonics Technology Letters,** vol. **8**, pp. 533-535, 1996.

436. J.E. Leight and A.E. Willner, "Reduced Switching Delay in Wavelength-Division-Multiplexed 2-D Multiple-Plane Optical Interconnections using Multiple-Wavelength VCSEL Arrays," **IEEE/OSA J. of Lightwave Technology**, vol. **14**, pp. 1467-1479, 1996.

437. D. Norte and A.E. Willner, "All-Optical Data Format Conversions and Reconversions Between the Wavelength and Time Domains for Dynamically Reconfigurable WDM Networks," **IEEE/OSA J. of Lightwave Technology and IEEE J. on Selected Areas in Communications**, Special Issue on Multiple-Wavelength Technologies and Networks, vol. **14**, pp. 1170-1182, 1996.

438. X.Y. Zou, M.I. Hayee, S.-M. Hwang, and A.E. Willner, "Limitations in 10 Gbit/s WDM Optical-Fiber Transmission When using a Variety of Fiber Types to Manage Dispersion and Nonlinearities," **IEEE/OSA J. of Lightwave Technology and IEEE J. on Selected Areas in Communications**, Special Issue on Multiple-Wavelength Technologies and Networks, vol. **14**, pp. 1144-1152, 1996.

439. D.A. Smith, R.S. Chakravarthy, Z. Bao, J.E. Baran, J.L. Jackel, A. d'Alessandro, D.J. Fritz, S.H. Huang, X.Y. Zou, S.-M. Hwang, A.E. Willner, and K. Li, "Evolution of the Acousto-Optic Wavelength-Routing Switch," **IEEE/OSA J. of Lightwave Technology and IEEE J. on Selected Areas in Communications**, Special Issue on Multiple-Wavelength Technologies and Networks, vol. **14**, pp. 1005-1019, 1996.

440. J.E. Leight, S. Homan, A.E. Willner, G. Giaretta, M.Y. Li, and C.J. Chang-Hasnain, "Experimental Demonstration of a Reconfigurable and Simultaneous Wavelength-Division-Multiplexed Multiple-Plane Optical Interconnections," **IEEE Photonics Technology Letters**, vol. **8**, pp. 302-304, 1996.

441. X.Y. Zou, S.-M. Hwang, and A.E. Willner, "Compensation of Raman Scattering and EDFA's Non-Uniform Gain in Ultra-Long-Distance WDM Links," **IEEE Photonics Technology Letters,** vol. **8**, pp. 139-141, 1996.

442. A.D. Norte and A.E. Willner, "Multi-Stage All-Optical WDM-to-TDM-to-WDM and TDM-to-WDM-to-TDM Data Format Conversion and Reconversion Through 80 km of Fiber and 3 EDFAs," **IEEE Photonics Technology Letters,** vol. **7**, pp. 1354-1356, 1995**.**

REFEREED JOURNAL PAPERS: (CONTINUED)

443. W. Shieh and A.E. Willner, "Optimal Conditions for High-Speed All-Optical SOA-Based Wavelength Shifting," **IEEE Photonics Technology Letters,** vol. **7**, pp. 1273-1275, 1995.

444. S. Homan and A.E. Willner, "High-Capacity Optical Storage using Multiple Wavelengths, Multiple Layers, and Volume Holograms," **IEE Electronics Letters,** vol. **31**, pp. 621-623, 1995.

445. A.E. Willner and S.-M. Hwang, "Transmission of Many WDM Channels Through a Cascade of EDFA's in Long-Distance Link and Ring Networks," **IEEE/OSA J. of Lightwave Technology**, Special Issue on Optical Amplifiers and Their Applications, vol. **13**, pp. 802-816, 1995.

446. A.E. Willner and W. Shieh, "Optimal Spectral and Power Parameters for All-Optical Wavelength Shifting: Single Stage, Fanout, and Cascadability," **IEEE/OSA J. of Lightwave Technology**, Special Issue on Optical Amplifiers and Their Applications, vol. **13**, pp. 771-781, 1995.

447. E. Park, D. Norte, and A.E. Willner, "Simultaneous All-Optical Header Replacement and Wavelength Shifting for a Dynamically-Reconfigurable WDM," **IEEE Photonics Technology Letters**, vol. **7**, pp. 810-812, 1995.

448. A.D. Norte, E. Park, and A.E. Willner, "All-Optical TDM-to-WDM Data-Format Conversion in a Dynamically-Reconfigurable WDM Network," **IEEE Photonics Technology Letters**, vol. **7**, pp. 920-922, 1995.

449. K.-C. Lee, V.O.K. Li, S.-M. Hwang, and A.E. Willner, "Multi-Wavelength Optical Networks with Wavelengths Outside the Erbium-Doped Fiber Amplifier Bandwidth," **IEEE/OSA J. of Lightwave Technology**, Special Issue on Optical Amplifiers and Their Applications, vol. **13**, pp. 791-801, 1995.

450. A.E. Willner and S.-M. Hwang, "Optically-Amplified WDM Ring Network Incorporating Channel-Dropping Filters," **IEEE Photonics Technology Letters**, vol. **6**, pp. 760-763, 1994.

451. A.D. Norte, A.E. Willner, W. Shieh, and A.R. Tanguay, Jr., "Multiple-Plane Optical Interconnections using Through-Wafer Hollow Dielectric Waveguide Vias," **IEEE Photonics Technology Letters,** vol. **6**, pp. 851-854, 1994.

452. A.E. Willner, C.J. Chang-Hasnain, and J.E. Leight, "2-D WDM Optical Interconnects using Multiple-Wavelength VCSEL's for Simultaneous and Reconfigurable Communication Between Many Planes," **IEEE Photonics Technology Letters**, vol. **5**, pp. 838-841, 1993.

453. A.E. Willner and S.-M. Hwang, "Passive Equalization of Non-Uniform EDFA Gain by Optical Filtering for Megameter Transmission of 20 WDM Channels through a Cascade of EDFA's," **IEEE Photonics Technology Lett**ers, vol. **5**, pp. 1023-1026, 1993.

454. S.-M. Hwang and A.E. Willner, "Guidelines for Optimizing System Performance for 20 WDM Channels Propagating through a Cascade of EDFA's," **IEEE Photonics Technology Letters**, vol. **5**, pp. 1190-1193, 1993.

455. M.W. Maeda, A.E. Willner, J.R. Wullert II, J. Patel, and M. Allersma, "Wavelength-Division Multiple-Access Network Based on Centralized Common-Wavelength Control," **IEEE Photonics Technology Letters,** vol. **5**, pp. 83-86, 1993.

456. A.E. Willner, "SNR Analysis of Crosstalk and Filtering Effects in an Amplified Multi-Channel Direct-Detection Dense-WDM System," **IEEE Photonics Technology Letters,** vol. **4**, pp. 186-189, 1992.

REFEREED JOURNAL PAPERS: (CONTINUED)

457. A.E. Willner, T. Chapuran, J.R. Wullert II, J. Meyer, and T.P. Lee, "Performance of Random-Wavelength-Switching of a DBR Laser using Packet Headers for Routing," **IEE Electronics Letters**, vol. **28**, pp. 1526-1528, 1992.

458. H.M. Presby, S. Yang, A.E. Willner, and C.A. Edwards, "Connectorized Integrated Star Couplers on Silicon," **Optical Engineering**, vol. **31**, pp. 1323-1327, 1992.

459. A.E. Willner, A.A.M. Saleh, H.M. Presby, D.J. DiGiovanni, and C.A. Edwards, "Star Couplers with Gain using Multiple Erbium-Doped Fibers Pumped with a Single Laser," **IEEE Photonics Technology Letters**, vol. **3**, pp. 250-252, 1991.

460. A.E. Willner and E. Desurvire, "Effect of Gain Saturation on Receiver Sensitivity in 1 Gb/s Multichannel FSK Direct-Detection Systems using Erbium-Doped Fiber Preamplifiers," **IEEE Photonics Technology Letters,** vol. **3**, pp. 259-261, 1991.

461. A.E. Willner, E. Desurvire, H.M. Presby, C.A. Edwards, and J. Simpson, "LD-Pumped Erbium-Doped Fiber Preamplifiers with Optimal Noise Filtering in a FDMA-FSK 1 Gb/s Star Network", **IEEE Photonics Technology Letters,** vol. **2,** pp. 669-672,1990.

462. A.E. Willner, I.P. Kaminow, M. Kuznetsov, J. Stone, and L.W. Stulz, "1.2 Gb/s Closely Spaced FDMA-FSK Direct-Detection Star Network," **IEEE Photonics Technology Letters,** vol. **2**, pp. 223-226, 1990.

463. M.N. Ruberto, X. Zhang, R. Scarmozzino, A.E. Willner, D.V. Podlesnik, and R.M. Osgood, Jr., "The Laser-Controlled Micrometer-Scale Photochemical Etching of III-V Semiconductors," **J. Electrochemical Society**, vol. **138**, pp. 1174-1185, 1991.

464. A.E. Willner, "Simplified Model of an FSK-to-ASK Direct-Detection System using a Fabry-Perot Demodulator," **IEEE Photonics Technology Letters,** vol. **2**, pp. 363-366, 1990.

465. A.E. Willner, D. V. Podlesnik and R. M. Osgood, Jr., "600 μm/min Laser-Induced Nonthermal Etching of GaAs in an HF Solution," **IEE Electronics Letters,** vol. **26**, pp. 568-569, 1990.

466. A.E. Willner, M. Kuznetsov, I.P. Kaminow, J. Stone, L. Stulz, and C.A. Burrus, "FM/FSK Response of Tunable Two-Electrode DFB Lasers and Their Performance with Noncoherent Detection," **IEEE Photonics Technology Letters,** vol. **1**, pp. 412-415, 1989.

467. A.E. Willner, M. Kuznetsov, I.P. Kaminow, U. Koren, T.L. Koch, C.A. Burrus, and G. Raybon, "Multi-Gigahertz Bandwidth FM Response of Frequency Tunable Two-Electrode DFB Lasers," **IEEE Photonics Technology Letters,** vol. **1**, pp. 360-363, 1989.

468. M. Kuznetsov, A.E. Willner, and I.P. Kaminow, "Frequency Modulation Response of Two-Segment Distributed Feedback Laser," **Applied Physics Letters,** vol. **55**, pp. 1826-1828, 1989.

469. A.E. Willner, I.P. Kaminow, M. Kuznetsov, J. Stone, and L.W. Stulz, "FDMA-FSK Noncoherent Star Network Operated at 600 Mb/s using Two-Electrode DFB Lasers and a Fiber Optical Filter Demultiplexer," **Electronics Letters, vol**. **25**, pp. 1600-1601, 1989.

470. R. Scarmozzino, D.V. Podlesnik, A.E. Willner and R.M. Osgood, Jr., "Modeling of Riblike Waveguides with Isolation Trenches of Finite Width," **Applied Optics**, vol. **28**, pp. 5203-5206, 1989.

471. M.N. Ruberto, A.E. Willner, D.V. Podlesnik, and R.M. Osgood, Jr., "The Effect of Photogenerated Carrier Confinement on the Laser-Controlled Aqueous Etching of GaAs/AlGaAs Heterostructures," **Applied Physics Letters,** vol. **55**, pp. 984-986, 1989.

REFEREED JOURNAL PAPERS: (CONTINUED)

472. A.E. Willner, M.N. Ruberto, D.J. Blumenthal, D.V. Podlesnik, and R.M. Osgood, Jr., "Laser Fabricated GaAs Waveguiding Structures," **Applied Physics Letters,** vol. **54**, pp. 1839-1841, 1989.

473. A.E. Willner, **Laser-Controlled Photochemical Etching of Semiconductors for Electrooptical Devices**, Ph.D. Thesis, Columbia University, 1988.

474. A.E. Willner, M.N. Ruberto, D.V. Podlesnik, and R.M. Osgood, Jr., "Laser Direct Writing of Integrated Optical Components in the GaAs/AlGaAs System," **Journal of the Electrochemical Society**, vol. **135**, no. 9, pp. c451-c452, 1988.

475. A.E. Willner, D.V. Podlesnik, H.H. Gilgen, and R.M. Osgood, Jr., "Photobias Effect in Laser-Controlled Etching of InP," **Applied Physics Letters,** vol. **53**, pp. 1198-1200, 1988.

476. D.V. Podlesnik, H.H. Gilgen, A.E. Willner and R.M. Osgood, Jr., "The Interaction of Deep Ultraviolet Laser Light with GaAs Surfaces in Aqueous Solutions," **Journal of the Optical Society of America B**, vol. **3**, pp. 775-784, 1986.

INVITED PAPERS AND PRESENTATIONS:

1. Alan E. Willner, "Mode-Multiplexed Free-Space Optical Communications," **Keynote Presentation, Smart Photonic and Optoelectronic Integrated Circuits conference, SPIE Photonics West,** San Francisco, CA, Jan. 2026 (SPIE, Bellingham, Wash., 2026).

2. Alan E. Willner, "Underwater Optical Ranging Techniques," **Invited Presentation, Conference OE305: Optical Sensing and Precision Metrology, SPIE Photonics West (OPTO),** San Francisco, CA, Jan. 2026 (SPIE, Bellingham, Wash., 2026).

3. Alan E. Willner, Huibin Zhou, and Xinzhou Su, "Perspective on Tailoring Longitudinal Structured Beam and Its Applications," **Invited Paper, Nanophotonics**, accepted for publication, 2025.

4. Alan E. Willner, "High-Accuracy Ranging in Turbid Water using Structured Light," **Plenary Talk, 13th International Conference on Intelligent Computing and Wireless Optical Communications (ICWOC 2025),** Chengdu, China, June 2025.

5. Alan E. Willner and Yuxiang Duan, "High-Accuracy Ranging in Turbid Water using Structured Light," **Plenary Lecture, Lasers, Optics, Photonics, Sensors & Ultrafast Nonlinear Optics (LOPS)**, Hollywood Beach, Florida, June 2025.

6. Alan E. Willner, "Photonics Research Webinar with Alan E. Willner," **Invited Webinar, Photonics Research**, Apr 2025.

7. Alan E. Willner, "Career Advice: How to Maximize Your Options," **Invited Presentation, IEEE Student Chapter Talk Series at USC**, Apr 2025.

8. Alan E. Willner, Xinzhou Su, Yue Zuo, Yingning Wang, Zile Jiang, Amir Minoofar, Hongkun Lian, Zixun Zhao, Abdulrahman Alhaddad, and Ruoyu Zeng, "Synthesis of Space-Time Wave Packets Using Correlated Optical Frequency Comb Lines and Spatial Fields," **Invited Paper, Nanophotonics**, vol. **14,** no. 6, 2025, pp. 659-675. 2025.

9. Alan E. Willner, Huibin Zhou, Hongkun Lian, Yue Zuo, Zixun Zhao, Xinzhou Su, and Hao Song, "Optical and THz Integrated Circuits for Mode-Dependent Free-Space Communications," **Invited Paper, IEEE/Optica Journal of Lightwave Technology**, vol. **43**, no. 4, pp. 1652-1661, 2025.

   **** Paper selected by the editors as the front cover image of this issue of JLT. ****

INVITED PAPERS AND PRESENTATIONS: (CONTINUED)

10. Vignesh Gopal, Asher Novick, Xinzhou Su, James Venditto, Muralekrishnan Ramakrishnan, Zile Jiang, Maarten Hattink, Anthony Rizzo, Ricard Menchon-Enrich, Xiang Meng, Alan E. Willner, and Keren Bergman, "Fully Reconfigurable Silicon Photonic Transceiver for Optical Inter-Satellite Links," **Invited Paper, IEEE/Optica Conference on Optical Fiber Communications (OFC),** paper **M3D.3**, San Francisco, CA, March 2025.

11. Alan E. Willner, "Structured-Light-Based High-Resolution and High-Dynamic-Range Optical Underwater Ranging Subsystem," **Invited Seminar, OUSD Basic Research Office Forum,** Feb. 2025.

12. Alan E. Willner, "Lessons Learned In Using Optics for Signal Processing," **Invited Tech Talk, IEEE/Optica Conference on Optical Fiber Communications (OFC),** San Francisco, CA, March 2025.

13. Alan E. Willner, "Underwater Optical Ranging Using Multiple Orbital-Angular-Momentum Modes," **Invited Paper, Conference OE305: Optical Sensing and Precision Metrology, SPIE Photonics West (OPTO),** paper **13380-44**, San Francisco, CA, Jan. 2025 (SPIE, Bellingham, Wash., 2025).

14. Alan E. Willner, "Tunable Superluminal-to-Negative Group Velocities in Free-Space and Fiber Using Frequency Combs, "**Invited Paper**, **Society of Photo-Instrumentation Engineers (SPIE) Photonics West, Optical, Quantum Sensing, Imaging, and Precision Metrology III**, paper **13392-55**, San Francisco, CA, Jan. 2025 (SPIE, Bellingham, Wash., 2025).

15. Alan. E. Willner, "Tailoring the Transverse, Longitudinal, and Temporal Properties of Space-Time Structured Light," **Invited Presentation**, **Optica Incubator Workshop on Spatiotemporal Structuring of Light**, Washington, DC, Nov. 2024 (Optica, D.C., 2024).

16. Alan E. Willner, "Integrated Optics to Metasurfaces—Impact and Legacy of Professor Richard Osgood, Jr.," **Invited Paper, Materials Research Society Fall Meeting,** paper **EL07.08.02,** Boston, MA, Dec. 2024.

17. Alan E. Willner, "Advances in Mode-Multiplexed Free-Space Optical Communications," **Invited Paper, Frontiers in Optics Conference 2024 (FiO)**, paper **FM3C. 1**, Denver, Colorado, Sep. 2024.

18. Alan E. Willner, "Value of Professional Societies to Your Career: Plant a Flag to be a Leader," **Invited Presentation, Frontiers in Optics Conference 2024 (FiO)**, Student Workshop, Denver, Colorado, Sep. 2024.

19. Alan E. Willner, "Optical Communications: Innovations and Applications Abound," **Invited Seminar, Elhanan and Solomon Golomb Memorial Lecture, Jerusalem College of Technology**, June 2024.

20. Alan E. Willner, "Structured Light for Communications and Sensing," **Invited Seminar, Distinguished Seminars, ECE /CQD, Northwestern University**, Nov. 2024.

21. Alan E. Willner, Huibin Zhou, Yuxiang Duan, Zile Jiang, Murale Ramakrishnan, Xinzhou Su, Kaiheng Zou, and Kai Pang, "Advances in Multi-Channel Mid-IR Free-Space Optical Communications," **Invited Paper, IEEE/Optica Journal of Lightwave Technology,** vol. **42**, no. 19, pp. 6739-6748, 2024.

22. Alan E. Willner, "Dynamic Space-Time Wave Packets," **Invited Paper**, **SPIE Active Photonic Platforms (APP) 2024 Conference, of the Nanoscience+Engineering Symposium, part of SPIE Optics and Photonics,** paper **13110-16**, San Diego, CA, August 2024.

23. Huibin Zhou, Yuxiang Duan, Murale Ramakrishnan, Zile Jiang, Xinzhou Su, Kaiheng Zou, Adam T. Heiniger, Moshe Tur, and Alan E. Willner, "Demonstration of an Optical Parametric Oscillator (OPO)-Based High-Power Data Transmitter for a 10-Gbit/s QPSK Mid-IR Coherent Free-Space Link Through Fog," **Invited Paper, IEEE/Optica Journal of Lightwave Technology,** vol. **42**, no. 11, pp. 3989-3996, 2024.

INVITED PAPERS AND PRESENTATIONS: (CONTINUED)

24. Runzhou Zhang, Xinzhou Su, Hao Song, Huibin Zhou, Moshe Tur, and Alan E. Willner, "Automatic Turbulence Resilience in Pilot-Assisted Self-Coherent Free-Space Optical Communications," **Invited Paper, IEEE/Optica Journal of Lightwave Technology,** vol. **42**, no. 10, pp. 3760-3769, 2024.

25. Alan E. Willner and Huibin Zhou, "Efficiently Adding Mode Multiplexing for Cost-Effective, High-Capacity Fiber Links," **Invited Commentary Paper, Advanced Photonics**, vol. **6**, no. 1, paper 010502, 2024.

26. Alan E. Willner, "Longitudinally-Structured Light Fields for Sensing and Dynamic Behavior," **Keynote Presentation**, **Lasers, Optics, Photonics, Sensors, Bio Photonics, Ultrafast Nonlinear Optics & Structured Light (LOPS) 2024 Conference,** Fort Lauderdale, FL, June 2024.

27. Alan E. Willner, "Free-Space Mid-IR Communication Systems," **Invited Tech Talk, IEEE/OSA Conference on Optical Fiber Communications (OFC),** San Diego, CA, March 2024.

28. Alan E. Willner, "Optical and THz Broadband Integrated Circuits for Mode-Dependent Free-Space Communications," **Invited Paper, IEEE/OSA Conference on Optical Fiber Communications (OFC**), paper **Tu2A.2**, San Diego, CA, March 2024.

29. Alan E. Willner, "Longitudinally Structured Light Fields for Sensing and Dynamic Behavior," **Invited Paper, SPIE Photonics West**, paper **12912-88**, San Francisco, CA, January 2024.

30. Alan E. Willner, Huibin Zhou, Xinzhou Su, Hao Song, Kai Pang, and Haoqian Song, "Utilizing Structured Modal Beams in Free-Space Optical Communications for Performance Enhancement," **Invited Paper, IEEE Journal of Selected Topics in Quantum Electronics**, vol. **29**, no. 6, article 3700213, 2023.

31. Alan E. Willner, "Mid-IR Free-Space Optical Communications Using WDM and OAM," **Invited Paper, European Conference on Optical Communication (ECOC),** paper **We.A.2.1**, Glasgow, UK, Oct. 2023.

32. Runzhou Zhang and Alan E. Willner, "Turbulence-Robust Free-Space Optical Transmission Assisted by a Pilot Beam," **Invited Paper, Photonic Networks and Devices,** paper **NeM4B.3**, Busan, Republic of Korea, July 2023.

33. Alan E. Willner, "Introducing and Defending Your Research Paper," **Invited Presentation, Opto-Electronics and Communications Conference (OECC)**, Student Workshop, Shanghai, China, July 2023.

34. Jeremy Upham, Zhimin Shi, Robert W. Boyd, and Alan E. Willner, "Vectorial Phase Conjugation for High-Fidelity Spatial Mode Transmission," **Invited Talk, Photonics North**, Montreal, Quebec, Canada, June 2023.

35. Alan E. Wilner, "Optical Communications: Innovations and Applications "Abound"," **Invited Talk, Benjamin Franklin Medal Symposium Celebrating Prof**. **Nader Engheta**, Villanova University, Villanova, PA, April 2023.

36. Alan E. Wilner, "Advances in Probing of Turbulent Media using Spatially Structured Light," **Invited Talk**, University of Pennsylvania, Philadelphia, PA, April 2023.

37. Alan E. Willner, "Structured Light for High-Capacity Communications," **Plenary Lecture, Lasers, Optics, Photonics, Sensors & Ultrafast Nonlinear Optics (LOPS)**, Fort Lauderdale, FL, June 2023.

38. Alan E. Willner, Hao Song, Kaiheng Zou, Huibin Zhou, and Xinzhou Su, "Orbital Angular Momentum Beams for High-Capacity Communications," **Invited Paper, IEEE/Optica Journal of Lightwave Technology,** vol. **41**, no. 7, pp. 1918-1933, 2023.

39. Huibin Zhou, Runzhou Zhang, Xinzhou Su, Yuxiang Duan, Haoqian Song, Hao Song, Kaiheng Zou, Robert W. Boyd, Moshe Tur, and Alan E. Willner, "Demonstration of Turbulence-Resilient Self-Homodyne 12-Gbit/s 16-QAM Free-Space Optical Communications Using a Transmitted Pilot Tone," **Invited Paper**, **IEEE/Optica Journal of Lightwave Technology**, vol. **41**, no. 11, pp. 3438-3445, 2023.

INVITED PAPERS AND PRESENTATIONS: (CONTINUED)

40. Xinzhou Su, Hao Song, Huibin Zhou, Kaiheng Zou, Yuxiang Duan, Narek Karapetyan, Runzhou Zhang, Amir Minoofar, Haoqian Song, Kai Pang, Shlomo Zach, Andreas F. Molisch, Moshe Tur, and Alan E. Willner, "A THz Integrated Circuit based on a Pixel Array to Mode Multiplex Two 10-Gbit/s QPSK Channels Each on a Different OAM Beam," **Invited Paper, IEEE/Optica Journal of Lightwave Technology**, vol. **41**, no. 4, pp. 1095-1103, 2023.

41. Alan E. Willner, Xinzhou Su, Hao Song, Huibin Zhou, and Kaiheng Zou, "Integrated Circuits Based on Broadband Pixel-Array Metasurfaces for Generating Data-Carrying Optical and THz Orbital Angular Momentum Beams," **Invited Paper**, **Nanophotonics**, vol. **12**, no. 14, pp. 2669-2685, 2023.

42. Kiyoul Yang, Chinmay Shirpurkar, Alex White, Jizhao Zang, Lin Chang, Farshid Ashitani, Melissa Guidry, Daniil Lukin, Srinivas Pericherla, Josh Yang, Hyounghan Kwon, Jesse Lu, Geunho Ahn, Kasper Van Gasse, Yan Jin, Su-Peng Yu, Travis Briles, Jordan Stone, David Carlson, Hao Song, Kaiheng Zou, Huibin Zhou, Kai Pang, Han Hao, Lawrence Trask, Mingxiao Li, Andy Netherton, Lior Rechtman, Jeffery Stone, Jinhie Skarda, Logan Su, Dries Vercruysse, Jean-Philippe MacLean, Shahriar Aghaeimeibodi, Ming-Jun Li, David Miller, Dan Marom, Alan Willner, John Bowers, Scott Papp, Peter Delfyett, Firooz Aflatouni, and Jelena Vuckovic, "Optical Data Transmission Using Inverse-Designed Silicon Multimode Photonic Circuits and Spectrally Flattened Microcombs," **Invited Paper**, **APS/IEEE/Optica Conference on Lasers and Electro-Optics (CLEO),** paper STh3J.3, San Jose, CA, May 2023 (Optica, DC, 2023).

**** Contributed Paper highly ranked by conference committee and upgraded to Invited Paper status. ****

43. Alan E. Willner, Kaiheng Zou, Kai Pang, Hao Song, Huibin Zhou, Amir Minoofar, and Xinzhou Su, "Free-Space Mid-IR Communications Using Wavelength and Mode Division Multiplexing," **Invited Paper**, **Optics Communications**, volume **541**, article 129518, 2023.

44. Amir Minoofar, Xinzhou Su, Huibin Zhou, and Alan E. Willner, "High-Capacity THz Communications Using Multiple Orbital-Angular-Momentum Beams", **Invited Paper, 5th OAM Transmission (OAMT) Workshop WS05, IEEE International Conference on Communications (ICC),** paper #1570882583, Rome, Italy, May 2023.

45. Alan E. Willner, "Sculpting Waves with Complex Structures," **Invited Presentation, Franklin Medal Symposium Celebrating Prof. Engheta**, Villanova University, Villanova, PA, April 2023.

46. Runzhou Zhang, Xinzhou Su, Hao Song, Huibin Zhou, Moshe Tur, and Alan E. Willner, "Automatic Turbulence Resilience in Self-Coherent Free-Space Optical Communications," **IEEE/Optica Conference on Optical Fiber Communications (OFC), Invited Paper,** paper **M1J.4**, March 2023 (Optica, Washington, D.C., 2023).

47. Yijie Shen, Qiwen Zhan, Logan G. Wright, Demetrios N. Christodoulides, Frank W. Wise, Alan E. Willner, Zhe Zhao, Kai-heng Zou, Chen-Ting Liao, Carlos Hernández-García, Margaret Murnane, Miguel A. Porras, Andy Chong, Chenhao Wan, Murat Yessenov, Ayman F. Abouraddy, Liang Jie Wong, Michael Go, Suraj Kumar, Cheng Guo, Shanhui Fan, Nikitas Papasimakis, Nikolay I. Zheludev, Lu Chen, Wenqi Zhu, Amit Agrawal, Christophe Dorrer, Spencer W. Jolly, Íñigo J. Sola, Ignacio Lopez-Quintas, Miguel López-Ripa, Benjamín Alonso, Konstantin Y. Bliokh, Yiqi Fang, Qihuang Gong, Yunquan Liu, Junyi Huang, Hongliang Zhang, Zhichao Ruan, Mickael Mounaix, Nicolas K. Fontaine, Joel Carpenter, Ahmed H. Dorrah, Federico Capasso, and Andrew Forbes, "Roadmap on Spatiotemporal Light Fields," **Invited Paper, Journal of Optics**, vol. **25**, no. 9, 2023.

48. Alan E. Willner, "Advances in Probing of Turbulent Media Using Spatially Structured Light," **Invited Paper, Conference QW102: Quantum Sensing, Imaging, and Precision Metrology, Quantum West Symposium, SPIE Photonics West Conference,** paper **12447-98**, San Francisco, CA, Jan. 2023.

INVITED PAPERS AND PRESENTATIONS: (CONTINUED)

49. Alan E. Willner, "Optical Communications: Innovations and Applications Abound," **Optica Invited Webinar,** Sept. 2022.

50. Alan E. Willner, Xinzhou Su, Huibin Zhou, Amir Minoofar, Zhe Zhao, Runzhou Zhang, Moshe Tur, Andreas F Molisch, Doohwan Lee, and Ahmed Almaiman, "High-Capacity Terahertz Communication Systems Based on Multiple Orbital-Angular-Momentum Beams," **Invited Paper, Journal of Optics**, vol. **24**, no. 12, paper number: 124002, 2022.

51. Alan E. Willner, "Optical Communications: Innovations ad Applications Abound," **Keynote Talk, International Commission for Optics (ICO), TU Dresden,** Dresden, Germany, Sept. 2022.

52. Alan E. Willner, "Integrated Circuits for High-Capacity Optical and THz Communication Links Based on OAM Beams," **Invited Paper, 3rd generation metamaterials (METAMATERIALS 3.1) symposium 2022**, Centraro, Italy, Aug. 2022.

53. Jorge Gomez-Ponce, Naveed A. Abbasi, Alan E. Willner, Charlie J. Zhang, and Andreas F. Molisch, "Directionally Resolved Measurement and Modeling of THz Band Propagation Channels," **Invited Paper, IEEE Open Journal of Antennas and Propagation,** vol. **3**, pp. 663–686, Jun. 2022.

54. Amir Minoofar, Xinzhou Su, Huibin Zhou, Runzhou Zhang, Fatemeh Alishahi, Kaiheng Zou, Hao Song, Kai Pang, Shlomo Zach, Moshe Tur, Andreas F. Molisch, Hirofumi Sasaki, Doohwan Lee, and Alan E. Willner, "Experimental Demonstration of Sub-THz Wireless Communications Using Multiplexing of Laguerre-Gaussian Beams When Varying Two Different Modal Indices," **Invited Paper, IEEE/Optica Journal of Lightwave Technology**, vol. **40**, no. 10, pp. 3285-3292, May 2022.

55. Huibin Zhou, Nanzhe Hu, Xinzhou Su, Runzhou Zhang, Haoqian Song, Hao Song, Kai Pang, Kaiheng Zou, Amir Minoofar, Brittany Lynn, Moshe Tur, and Alan E. Willner, "Experimental Demonstration of a 100-Gbit/s 16-QAM Free-Space Optical Link Using a Structured Optical "Bottle Beam" to Circumvent Obstructions," **Invited Paper, IEEE/Optica Journal of Lightwave Technology**, vol. **40**, no. 10, pp. 3277-3284, May 2022.

56. Alan E. Willner, "Advances in Utilizing OAM Multiplexing for Communication Systems," **Invited Presentation, International Conference on Optical Angular Momentum (ICOAM),** Tampere, Finland, June 2022.

57. Alan E. Willner, "Optical Signal Processing and Networking Functions Using Nonlinear Wave Mixing", **Invited Presentation, International All-Optical Signal Processing Workshop, Aston Institute of Photonic Technologies (AiPT)**, April 2022.

58. Alan E. Willner, "Optical Communications: Innovations and Applications Abound," **Internal Faculty Seminar, CILQ Institute, USC,** Feb. 2022.

59. Alan E. Willner, "Optical Communications: Innovations and Applications Abound," **Invited Presentation, Celebrate the 60th Anniversary of the Fiber Laser, The National Academy of Sciences, India (NASI) - Delhi Chapter,** Jan. 2022.

60. Alan E. Willner, "Tunable and Broadband Photonic Integrated Circuits Using Metasurfaces for the Generation and Detection of Orbital-Angular-Momentum Beams," **Keynote Paper, Conference on Quantum Sensing and Nano Electronics and Photonics XVIII, SPIE Photonics West,** paper **12009-44**, San Francisco, CA, Jan. 2022.

61. Amir Minoofar Fatemeh Alishahi, Ahmad Fallahpour, Kaiheng Zou, Narek Karapetyan, Jonathan Habif, and Alan E. Willner, "Remotely Biasing, Controlling, and Monitoring a Network Routing Node based on

INVITED PAPERS AND PRESENTATIONS: (CONTINUED)

Optically Provided Signals," **Invited Paper, Conference of Metro and Data Center Optical Networks and Short Reach Links V, SPIE Photonics West,** paper **12027-4**, San Francisco, CA, Jan. 2022.

62. Alan E. Willner, "Spatio-Temporal Pulses with Controllable Propagation Properties based on a Combination of Spatial Modes on Different Frequency Comb Lines," **Invited Paper, Conference on Optical and Quantum Sensing and Precision Metrology II, SPIE Photonics West,** paper **12016-55**, San Francisco, CA, Jan. 2022.

63. Alan E. Willner, "Optical Communications: Innovations and Applications Abound," **Invited Colloquium, Institute of Optics**, University of Rochester, Rochester, NY, Nov. 2021.

64. Alan E. Willner, "Optical Communications: Innovations and Applications Abound," **Invited Seminar, IEEE Photonics Society Student Chapter, University of Laval**, Quebec, Canada, Nov. 2021.

65. Alan E. Willner, "Lessons Learned in Optical Communications," **Invited Presentation, 2021 Workshop of "111" Program and International Cooperation Research Center of China, School of Information Science and Technology,** Southwest Jiaotong University (SWJTU), China, Dec. 2021.

66. Hao Song, Huibin Zhou, Kaiheng Zou, Runzhou Zhang, Kai Pang, Haoqian Song, Amir Minoofar, Xinzhou Su, Nanzhe Hu, Cong Liu, Robert Bock, Brittany Lynn, Shlomo Zach, Moshe Tur, and Alan E. Willner, "Demonstration of Recovering Orbital-Angular-Momentum Multiplexed Channels Using a Tunable, Broadband Pixel-Array-based Photonic-Integrated-Circuit Receiver," **Invited Paper, IEEE/Optica Journal of Lightwave Technology,** vol. 40, no. 5, pp. 1346-1352, March 2022.

67. Haoqian Song, Runzhou Zhang, Nanzhe Hu, Huibin Zhou, Xinzhou Su, Hao Song, Kaiheng Zou, Kai Pang, Cong Liu, Daeyoung Park, Brittany Lynn, Greg Gbur, Aristide Dogariu, Richard J. Watkins, Jerome K. Miller, Eric Johnson, Moshe Tur and Alan E. Willner, "Dynamic Aerosol and Dynamic Air-Water Interface Curvature Effects on a 2-Gbit/s Free-Space Optical Link Using Orbital-Angular-Momentum Multiplexing," **Invited Paper, Nanophotonics,** vol. 11, no. 4, pp. 1-11, Nov. 2021.

68. Alan E. Willner, "Orbital-Angular-Momentum of Electromagnetic Waves: Principles and Applications," **Invited Colloquium, USC Dept. of Physics and Astronomy Colloquium Series**, Sept. 2021,

69. Alan E. Willner, "High-Capacity Optical, THz, and Millimeter-Wave Communications Using Multiple Orbital-Angular-Momentum Beams," **Invited Paper, Metamaterials Congress,** paper **MCPCA83316**, Sept. 2021.

70. Alan E. Willner, Kai Pang, Hao Song, Kaiheng Zou, and Huibin Zhou, "Orbital Angular Momentum of Light for Communications," **Invited Paper, Applied Physics Reviews**, vol. **8**, Article number: 041312, 2021.

    **** Paper chosen as a "Featured Article" for that issue. ****
    **** Selected as a "Highly Cited Paper" by Web of Science in the Physics category (top 1% in citations amongst physics publications). ****

71. Alan E. Willner, "Mitigation of Intra-Modal-Group Power Coupling of Few-Mode Fiber," **Invited Paper, IEEE Photonics Conference (IPC) 2021,** paper **TuF4.3**, Oct. 2021 (IEEE, Piscataway, NJ, 2021).

72. Alan E. Willner, "Optical Communications: Innovations and Applications Abound," **Plenary Paper, Applied Optics and Photonics China**, Beijing, China, July 2021.

73. Alan E. Willner, "Optical Communications: Innovations and Applications Abound," **Invited Presentation, Distinguished Lecture, Institute for Broadband Research and Innovation (IBRI), Soochow University**, Jiangsu, China, July 2021.

INVITED PAPERS AND PRESENTATIONS: (CONTINUED)

**** Highest number of attendees of the Distinguished Lecture Series. ****

74. Alan E. Willner, "Optical Communications Innovations for Free-Space and Optical-Signal-Processing Applications," **Invited Paper, IPEC Workshop,** June 2021.

75. Alan E. Willner, "Lessons Learned in Data Transmission and Processing in Optical Communication Systems," **Invited Tech Talk, IEEE/OSA Conference on Optical Fiber Communications (OFC),** June 2021.

76. Alan E. Willner, "Signal Processing Techniques that Impact Optical Communications," **Invited Paper, IEEE Radio Frequency Integrated Circuits Symposium, Whorkshop on Coherent Optical Communications for Cloud Data Centers, Metro, and Submarine Networks,** Atlanta, GA, June 2021.

77. Alan E. Willner, "Optical Communications: Innovations and Applications Abound," **Plenary Paper**, **APS/IEEE/OSA Conference on Lasers and Electro-Optics (CLEO),** San Jose, CA, May 2021 (Optical Society of America, Washington, D.C., 2021).

78. Alan E. Willner, "Free-Space Quantum Communication Links using Orbital-Angular-Momentum Encoding," **Keynote Paper, Quantum Engineering Workshop - Theory & Practice,** May 2021.

79. Alan E. Willner, "High-Capacity, Free-Space Optical and Millimeter-Wave Communications Using Mode-Division-Multiplexing," **Plenary Paper, China Microwave Week (CMW),** Nanjing, China, May 2021.

80. Alan E. Willner, "High-Capacity Optical and Millimeter-Wave Communications using Multiple Orbital-Angular-Momentum Beams," **Invited Colloquium, Department of Physics and Astronomy, University of New Mexico**, Albuquerque, New Mexico, Feb. 2021.

81. Alan E. Willner, "OAM Light for Communications," **Invited Paper, OSA Optics & Photonics News**, vol. **32**, no. 6, pp. 34-41, 2021.

82. Alan E. Willner, Z. Zhao, C. Liu, R. Zhang, H. Song, K. Pang, K. Manukyan, H. Song, X. Su, G. Xie, Y. Ren, Y. Yan, M. Tur, A.F. Molisch, R.W. Boyd, H. Zhou, N. Hu, A. Minoofar, and H. Huang, "Perspectives on Advances in High-Capacity, Free-Space Communications Using Multiplexing of Multiple Orbital-Angular-Momentum Beams," **Invited Perspective**, **APL Photonics**, vol. **6**, Article number: 030901, 2021.

**** Paper selected as "Editors' Pick" (5 out of 20 in that issue) and chosen as cover art for that issue. ****

83. Karapet Manukyan, M. Zahirul Alam, Cong Liu, Kai Pang, Hao Song, Zhe Zhao, Moshe Tur, Robert W. Boyd, and Alan E. Willner, "Dependence of the Coupling Properties between a Plasmonic Antenna Array and a Sub-Wavelength Epsilon-Near-Zero Film on Structural and Material Parameters," **Invited Paper, Applied Physics Letters,** vol. **118,** Article number: 241102, 2021.

84. Alan E. Willner and Zhe Zhao, "Spatiotemporal Beams that Combine Two Orbital-Angular Momenta Using a Frequency Comb," **Invited Paper, SPIE Photonics West**, paper **11700-108**, San Francisco, CA, March 2021.

85. Alan E. Willner, "Dynamic Spatiotemporal Beams that Combine Two Independent and Controllable Orbital-Angular-Momenta Using Multiple Optical-Frequency-Comb Lines," **Invited Paper, SPIE Photonics West,** San Francisco, CA, March 2021.

86. Alan E. Willner and Cong Liu, "Perspective on Using Structured Light for Enhanced Capacity in Mode-Division-Multiplexed Free-Space Optical Communication Links," **Invited Paper, Nanophotonics,** vol. **10**, no. 1, pp. 225-233, 2021.

INVITED PAPERS AND PRESENTATIONS: (CONTINUED)

87. Alan E. Willner, "High-Capacity Optical Communications Using Multiple Orbital-Angular-Momentum Beams," **Plenary Paper, Global Summit and Expo on Laser, Optics and Photonics (GSELOP),** Paris, France, Aug. 2021.

88. Alan E. Willner, "Recent Advances in High-Capacity Free-Space Communication Links Using Mode-Division Multiplexing," **Keynote Paper, IEEE GLOBECOM, Workshop on High-Capacity Wireless Communications**, Taipei, Taiwan, Dec. 2020.

89. Alan E. Willner, "High-Capacity Optical and Millimeter-Wave Communications Using Multiple Orbital-Angular-Momentum Beams," **Invited Seminar, Electrical & Computer Engineering, Brigham Young University,** Provo, UT, Nov. 2020.

90. Alan E. Willner, "High-Capacity Optical and Millimeter-Wave Communications Using Multiple Orbital-Angular-Momentum Beams," **Invited Presentation, Distinguished Colloquium Speaker, School of Electrical Engineering and Computer Science, The Pennsylvania State University**, Centre County, PA, Oct. 2020.

91. Alan E. Willner, Ahmad Fallahpour, Kaiheng Zou, Fatemeh Alishahi, and Huibin Zhou, "Optical Signal Processing Aided by Optical Frequency Combs," **Invited Paper, IEEE Journal of Selected Topics in Quantum Electronics**, vol. **27**, no. 2, article number: 7700916, 2020.

92. Alan E. Willner, "Advances in High-Capacity Optical Communications Using Multiple Structured Beams," **Invited Paper, APS/IEEE/OSA Conference on Lasers and Electro-Optics (CLEO),** paper **JM4N.3,** San Jose, CA, May 2020 (Optical Society of America, Washington, D.C., 2020).

93. Alan E. Willner, "High-Capacity Free-Space Optical and Millimeter-Wave Communications Using Mode-Division-Multiplexing," **Plenary Paper, 29th Wireless and Optical Communications Conference (WOCC),** Newark, NJ, May 2020.

94. Huibin Zhou, Runzhou Zhang, Hao Song, Nanzhe Hu, Haoqian Song, Kaiheng Zou, Xinzhou Su, Zhe Zhao, Kai Pang, Ahmed Almaiman, Cong Liu, Amir Minoofar, Brittany Lynn, Daeyoung Park, Robert W. Boyd, Moshe Tur, and Alan E. Willner, "Demonstration of Turbulence Resiliency in a Mode-, Polarization-, and Wavelength-Multiplexed Free-Space Optical Link Using Pilot-Assisted Optoelectronic Beam Mixing," **Invited Paper, IEEE/Optica Journal of Lightwave Technology**, vol. 40, no. 3, pp. 588-596, Feb. 2022.

95. Ahmad Fallahpour, Fatemeh Alishahi, Kaiheng Zou, Yinwen Cao, Ahmed Almaiman, Arne Kordts, Maxim Karpov, Martin Hubert Peter Pfeiffer, Karapet Manukyan, Huibin Zhou, Peicheng Liao, Cong Liu, Moshe Tur, Tobias J. Kippenberg, and Alan E. Willner, "Demonstration of Tunable Optical Aggregation of QPSK to 16QAM over Optically Generated Nyquist Pulse Trains Using Nonlinear Wave Mixing and a Kerr Frequency Comb," **Invited Paper, IEEE/OSA Journal of Lightwave Technology**, vol. **32**, no. 2, pp. 359-365, 2019.

96. Haoqian Song, Hao Song, Runzhou Zhang, Karapet Manukyan, Long Li, Zhe Zhao, Kai Pang, Cong Liu, Ahmed Almaiman, Robert Bock, Brittany Lynn, Moshe Tur, Alan E Willner, "Experimental Mitigation of Atmospheric Turbulence Effect Using Pre-Signal Combining for Uni- and Bi-directional Free-Space Optical Links with Two 100-Gbit/s OAM-Multiplexed Channels," **Invited Paper, IEEE/OSA Journal of Lightwave Technology**, vol. **38**, no. 1, pp. 82-89, 2020.

97. Alan E. Willner, "Optical Communications Using Orbital Angular Momentum Beams," **Invited Presentation, SRC/SIA/DoE Decadal Plan Workshop on New Trajectories for Communication**, San Diego, CA, Feb. 2020.

INVITED PAPERS AND PRESENTATIONS: (CONTINUED)

98. Alan E. Willner, "Using Kerr Frequency Combs for Optical Signal Processing Functions," **Invited Paper**, **Society of Photo-Instrumentation Engineers (SPIE) Optics and Photonics, Photonics West, Optical, Opto-Atomic and Entanglement-Enhanced Precision Metrology II,** paper **11296-79**, San Francisco, CA, Feb. 2020 (SPIE, Bellingham, Wash., 2020).

99. Alan E. Willner, "High-Capacity Free-Space Communication Links Using Mode-Division Multiplexing," **Keynote Paper, IEEE GLOBECOM, Workshop on High-Capacity Point-to-Point Wireless Communications**, Waikoloa, HI, Dec. 2019.

100. Alan E. Willner, "Industry Podium Talk: High-Capacity Free-Space Communication Links Using Mode-Division Multiplexing," **Invited Presentation, Industry Podium Talk, IEEE GLOBECOM,** Waikoloa, HI, Dec. 2019.

101. Alan E. Willner, "OAM Light for Classical and Quantum Communications," **Keynote Presentation**, **Materials Research Society Fall Meeting, Symposium on Bridging the Gap Between Academia and Industry in Electronics and Photonics**, Boston, MA, Dec. 2019.

102. Alan E. Willner, "High-Capacity Communications Using Multiplexing of Multiple Orbital-Angular-Momentum Beams," **Invited Presentation, Distinguished Lecture Series**, **Department of Electrical and Computer Engineering, University of Delaware,** Newark, Delaware, Nov. 2019.

103. Alan E. Willner, "High-Capacity Optical Communications Using Multiplexing of Multiple Orthogonal Beams," **Plenary Talk, IEEE/OSA/SPIE Asia Communications and Photonics Conference (ACP)**, Chengdu, China, Nov. 2019.

104. Alan E. Willner, "Modal Crosstalk Issues in OAM-Based Optical Communication Systems," **Invited Presentation**, **5th International Conference on Optical Angular Momentum (ICOAM),** Ottawa, Canada, Jun. 2019.

105. Peicheng Liao and Alan E. Willner, "Optical Signal Processing Functions Using Frequency Combs," **Invited Presentation, International Symposium on Ultrafast Photonic Technologies (ISUPT), Workshop on Advanced Electronic and Photonic Signal Processing Technologies for Ultra-high Capacity Communications,** NAPA, CA, June 2019.

106. Alan E. Willner, "“Twisted Light”: High-Capacity Optical Communications Using Multiplexing of Multiple Orbital-Angular-Momentum Beams," **Invited Presentation, Applied Physics Colloquium,** School of Engineering and Applied Science, Harvard University, Cambridge, MA, April 2019.

107. Alan E. Willner, "Reconfigurable Optical Signal Processing Functions using Frequency Combs," **Invited Paper, Optical Fiber Communications (OFC) Workshop on Optical and RF Photonic Signal Processing Based on Frequency Combs**, San Diego, CA, Mar. 2019 (Optical Society of America, Washington, D.C., 2019).

108. Paul F. McManamon, Armand Vedadi, Alan E. Wilner, Dipayan Choudhary, and Ohad Harlev, "A Revolutionary Optical Hyper Data Center," **Invited Paper, Society of Photo-Instrumentation Engineers (SPIE) Optics and Photonics, Optical Engineering and Applications,** paper 11125-11, San Diego, CA, Aug. 2019 (SPIE, Bellingham, Wash., 2019).

109. Paolo Minzioni, Cosimo Lacava, Takasumi Tanabe, Jianji Dong, Xiaoyong Hu, Gyorgy Csaba, Wolfgang Porod, Ghanshyam Singh, Alan E Willner, Ahmed Almaiman, Jochen Schröder, Anna C Peacock, Michael J Strain, Francesca Parmigiani, Giampiero Contestabile, David Marpaung, Zhixin Liu, John E Bowers, Lin Chang, Simon Fabbri, María Ramos Vázquez, Vibhav Bharadwaj, Shane M Eaton, Peter Lodahl, Xiang

INVITED PAPERS AND PRESENTATIONS: (CONTINUED)

Zhang, Benjamin J Eggleton, William John Munro, Kae Nemoto, Olivier Morin, Julien Laurat, Joshua Nunn, "Roadmap on All-optical Processing," **Invited Paper, Journal of Optics**, vol. **21**, no. 6, pp. 063001, 2019.

110. Peicheng Liao, Changjing Bao, Ahmed Almaiman, Arne Kordts, Maxim Karpov, Martin Hubert Peter Pfeiffer, Lin Zhang, Fatemeh Alishahi, Yinwen Cao, Kaiheng Zou, Ahmad Fallahpour, Ari N. Willner, Moshe Tur, Tobias J. Kippenberg, and Alan E. Willner, "Demonstration of Multiple Kerr-Frequency-Comb Generation Using Different Lines from Another Kerr Comb Located up to 50 km Away," **Invited Paper**, **IEEE/OSA Journal of Lightwave Technology**, vol. **37**, no. 2, pp. 579-584, 2019.

111. Fatemeh Alishahi, Amirhossein Mohajerin-Ariaei, Ahmad Fallahpour, Yinwen Cao, Ahmed Almaiman, Peicheng Liao, Changjing Bao, Bishara Shamee, Kaiheng Zou, Huibin Zhou, Ari N Willner, Joseph D Touch, Moshe Tur, Carsten Langrock, Martin M Fejer, Alan E Willner, "Optical Mitigation of Interchannel Crosstalk for Multiple Spectrally Overlapped 20 Gbaud QPSK/16-QAM WDM Channels Using Nonlinear Wave Mixing," **Invited Paper**, **IEEE/OSA Journal of Lightwave Technology**, vol. **37**, no. 2, pp. 548-554, 2019.

112. Alan E. Willner, "Free-Space Quantum Communication Links using Orbital-Angular-Momentum," **Keynote Paper**, **Society of Photo-Instrumentation Engineers (SPIE) Photonics West, Quantum Sensing and Nano Electronics and Photonics XVI,** paper **10926-105**, San Francisco, CA, Feb. 2019 (SPIE, Bellingham, Wash., 2019).

113. Alan E. Willner, "Advances in Using Orbital-Angular-Momentum Beams for Sensing and Imaging Applications," **Invited Paper**, **Society of Photo-Instrumentation Engineers (SPIE) Photonics West, Optical, Opto-Atomic, and Entanglement-Enhanced Precision Metrology,** paper **10934-39**, San Francisco, CA, Feb. 2019 (SPIE, Bellingham, Wash., 2019).

114. Cong Liu, Kai Pang, Zhe Zhao, Peicheng Liao, Runzhou Zhang, Haoqian Song, Yinwen Cao, Jing Du, Long Li, Hao Song, Yongxiong Ren, Guodong Xie, Yifan Zhao, Jiapeng Zhao, Seyed M. H. Rafsanjani, Ari N. Willner, Jeffrey H. Shapiro, Robert W. Boyd, Moshe Tur, and Alan E. Willner, "Single-End Adaptive Optics Compensation for Emulated Turbulence in a Bi-directional 10-Mbit/s per Channel Free-Space Quantum Communication Link Using Orbital-Angular-Momentum Encoding", **Invited Paper**, **Research,** vol. **2019**, pp. 8326701, 2019.

115. Alan E. Willner, Ahmad Fallahpour, Fatemeh Alishahi, Yinwen Cao, Amir Hossein Mohajerin-Ariaei, Ahmed Almaiman, Peicheng Liao, Kaiheng Zou, Ari N. Willner, and Moshe Tur, "All-Optical Signal Processing Techniques for Flexible Networks," **Invited Paper**, **IEEE/OSA Journal of Lightwave Technology**, vol. **37**, no. 1, pp. 21-35, 2019.

116. Alan E. Willner, "High-Capacity Optical Communications Using Multiple Orbital-Angular-Momentum Beams," **Invited Presentation, Schawlow-Townes Symposium on Photonics**, University of Ottawa, Ottawa, Canada, Oct. 2018.

117. Alan E. Willner, "All-Optical Quantum Networking," **Plenary Presentation, Workshop on Quantum Networks for Open Science, U.S. Department of Energy Office of Advanced Scientific Computing Research**, Rockville, Maryland, Sept. 2018.

118. Alan E. Willner, "Some Practical Issues with Free-Space OAM-Based Optical Communications," **Invited Presentation, APS/IEEE/OSA Conference on Lasers and Electro-Optics Pacific Rim (CLEO-PR), Workshop on Tailored Complex Optical Fields: from Twisted Light to Structured Light**, Hong Kong, July 2018 (Optical Society of America, Washington, D.C., 2018).

119. Mohammad Mirhosseini, Yiyu Zhou, Jiapeng Zhao, Seyed Mohammad Hashemi Rafsanjani, Alan E. Willner, and Robert W. Boyd, "Encoding Quantum Information on the Full Spatial Bandwidth of Photons," **Invited**

INVITED PAPERS AND PRESENTATIONS: (CONTINUED)

Paper, OSA Imaging and Applied Optics Congress, Application of Lasers for Sensing & Free Space Communication, paper **STu5H.1**, Orlando, June 2018 (OSA, Washington, DC, 2018).

120. Alan E. Willner, "Free-Space Quantum Communication Links using Orbital-Angular-Momentum," **Invited Paper, OSA Imaging and Applied Optics Congress, Application of Lasers for Sensing & Free Space Communication**, paper **SW2H.4**, Orlando, June 2018 (OSA, Washington, DC, 2018).

121. Alan E. Willner, "Adaptive Optics in Optical Communication Systems," **Invited Paper, OSA Imaging and Applied Optics Congress, Adaptive Optics: Methods, Analysis and Applications**, paper **OTh2F.2**, Orlando, June 2018 (OSA, Washington, DC, 2018).

122. Alan E. Willner, "Free-Space and Underwater Optical Communications using Orbital-Angular-Momentum Multiplexing," **Invited Presentation, Society of Photo-Instrumentation Engineers (SPIE) Photonics North 2018,** paper OP-COMM-4-32-4, June 2018, Montreal, Canada (SPIE, Bellingham, Wash., 2018).

123. Kai Pang, Haoqian Song, Zhe Zhao, Runzhou Zhang, Hao Song, Guodong Xie, Long Li, Cong Liu, Jing Du, Andreas F. Molisch, Moshe Tur, Alan E Willner, "Experimental Demonstration of 400-Gbit/s Free-Space Mode-Division-Multiplexing by Varying Both Indices when using Four Laguerre-Gaussian Modes or Four Hermite-Gaussian Modes," **APS/IEEE/OSA Conference on Lasers and Electro-Optics (CLEO)**, paper **SM3C.4**, San Jose, CA, May 2018 (OSA, Wash., D.C., 2018).

**** Contributed Paper highly ranked by conference committee and upgraded to Invited Paper status. ****

124. Alan E. Willner, "Vector-Mode Multiplexing Brings an Additional Domain for Capacity Growth in Optical Fibers," **Invited Paper, Light Science & Applications**, vol. **7**, pp. 18002, 2018.

125. Alan E. Willner, "Advances in Optical Delay Technologies for Signal Processing," **Invited Paper**, **Society of Photo-Instrumentation Engineers (SPIE) Photonics West, Steep Dispersion Engineering and Opto-Atomic Precision Metrology XI,** paper 10548-19, San Francisco, CA, Jan. 2018 (SPIE, Bellingham, Wash., 2018).

126. Yinwen Cao, Ahmad Fallapour, Morteza Ziyadi, and Alan E. Willner, "Optical Signal Processing using Coherent Optical Frequency Combs," **Invited Paper**, **Society of Photo-Instrumentation Engineers (SPIE) Photonics West, Metro and Data Center Optical Networks and Short-Reach Links,** paper 10560-19, San Francisco, CA, Jan. 2018 (SPIE, Bellingham, Wash., 2018).

127. Shuhui Li, Shi Chen, Alan E. Willner, Chunqing Gao, and Jian Wang, "Atmospheric Turbulence Compensation in Orbital Angular Momentum Communications: Advances and Perspectives," **Invited Paper, Optics Communications,** vol. **408**, pp. 68-81, 2018.

128. Alan E Willner, Zhe Zhao, Yongxiong Ren, Long Li, Guodong Xie, Haoqian Song, Cong Liu, Runzhou Zhang, Changjing Bao and Kai Pang, "Underwater Optical Communications Using Orbital Angular Momentum-based Spatial Division Multiplexing," **Invited Paper, Optics Communications,** vol. **408**, pp. 21-25, 2018.

129. Girish Agarwal, Roland E. Allen, Iva Bezdeková, Robert W. Boyd, Goong Chen, Ronald Hanson, Dean L. Hawthorne, Philip Hemmer, Olga Kocharovskaya, Harald Losert, Moochan B. Kim, David M. Lee, Sebastian K. Lidstrom, Suzy Lidstrom, Helmut Maier, John W. Neuberger, Miles J. Padgett, Mark Raizen, Surjeet Rajendran, Ernst Rasel, Gavriil Shchedrin, Wolfgang P. Schleich, Marlan O. Scully, Gennady Shvets, Alexei Sokolov, Ronald L. Walsworth, Rainer Weiss, Frank Wilczek, Alan E. Willner, Eli Yablonovich, and Nikolay Zheludev, "Light, the Universe, and Everything - 12 Herculean Tasks for Quantum Cowboys and Black Diamond Skiers," **Invited Paper**, **Journal of Modern Optics**, vol. **65**, no. 11, pp. 1261-1308, 2018.

INVITED PAPERS AND PRESENTATIONS: (CONTINUED)

**** One of the 10 most downloaded papers published in Taylor and Francis Journal from Feb. 2018 to Feb. 2019. ****

130. Yinwen Cao, Ahmed Almaiman, Morteza Ziyadi, Amirhossein Mohajerin Ariaei, Changjing Bao, Peicheng Liao, Fatemeh Alishahi, Ahmad Fallahpour, Youichi Akasaka, Carsten Langrock, Martin M Fejer, Joseph D Touch, Moshe Tur, and Alan E. Willner, "Reconfigurable Channel Slicing and Stitching for an Optical Signal to Enable Fragmented Bandwidth Allocation Using Nonlinear Wave Mixing and an Optical Frequency Comb," **Invited Paper**, **IEEE/OSA Journal of Lightwave Technology**, vol. **36**, no. 2, pp. 440-446, 2018.

131. Alan E. Willner, "High-Capacity Optical Communications Using Multiplexing of Multiple Orbital-Angular-Momentum Beams," **Distinguished Lecture Series**, **Department of Electrical & Computer Engineering, George Washington University,** Washington, D.C., Sept. 2017.

132. Yongxiong Ren, Cong Liu, Kai Pang, Jiapeng Zhao, Yinwen Cao, Guodong Xie, Long Li, Zhe Zhao, Zhe Wang, Moshe Tur, Robert Boyd, Alan Willner, "Experimental Demonstration of an Orbital-Angular-Momentum Encoded Quantum Communication Link Co-propagating with a Classical Channel," **Invited Paper, APS/IEEE/OSA Conference on Lasers and Electro-Optics (CLEO)**, paper SW4I, San Jose, CA, May 2017 (Optical Society of America, Wash., D.C., 2017).

**** Contributed Paper highly ranked by conference committee and upgraded to Invited Paper status. ****

133. Alan E. Willner, "Structured Light Using OAM and Wavelength Domains for Terabit/sec Communications," **Invited Presentation**, **APS/IEEE/OSA Conference on Lasers and Electro-Optics (CLEO)**, San Jose, CA, May 2017 (Optical Society of America, Wash., D.C., 2017).

134. Alan E. Willner, "High-Capacity Optical and Millimeter-Wave Communications Using Multiplexing of Multiple Orbital-Angular-Momentum Beams," **Invited Seminar, Armstrong Memorial Distinguished Lecture and Dept. of Electrical Engineering Distinguished Lecture, Columbia University**, New York, NY, Dec. 2017.

135. Alan E. Willner, "High-Capacity Optical Communications Using Multiplexing of Multiple Orbital-Angular-Momentum Beams," **Invited Colloquium, Department of Physics, University of Colorado at Boulder**, Boulder, CO, March 2017.

136. Alan E. Willner, "High-Capacity Communications using Multiplexing of Multiple Orbital-Angular-Momentum Beams," **Keynote Presentation**, **Society of Photo-Instrumentation Engineers (SPIE) Photonics West, Complex Light and Optical Forces XI**, paper 10120-31, San Francisco, CA, Feb. 2017 (SPIE, Bellingham, Wash., 2017).

137. Alan E. Willner, "Design Challenges and Potential Mitigation Approaches for Orbital Angular Momentum-Multiplexed Free-Space Links," **Keynote Presentation**, **Society of Photo-Instrumentation Engineers (SPIE) Photonics West, Quantum Sensing and Nano Electronics and Photonics XIV**, paper 10111-96, San Francisco, CA, Feb. 2017 (SPIE, Bellingham, Wash., 2017).

138. Alan E. Willner, "Optical Delays to Achieve Optical Signal Processing Functions," **Invited Paper**, **Society of Photo-Instrumentation Engineers (SPIE) Photonics West, Slow Light, Fast Light, and Opto-Atomic Precision Metrology X,** paper 10119-59, San Francisco, CA, Feb. 2017 (SPIE, Bellingham, Wash., 2017).

139. Moshe Tur, Guodong Xie and Alan Willner, "Fiber Amplifiers and Lasers using Orbital Angular Momentum (OAM) Optical Modes," **Invited Paper, IFLA - International Meeting on Fiber Lasers and Applications**, Tel Aviv University, Israel, Feb. 2017.

INVITED PAPERS AND PRESENTATIONS: (CONTINUED)

140. Alan E. Willner, "High-Capacity Optical Communications Using Multiplexing of Multiple Orbital-Angular-Momentum Beams," **Distinguished Lecture Series**, **School of Computing and Information Science, Florida International University,** Miami, FL, Jan. 2017.

141. Alan E. Willner, Yongxiong Ren, Guodong Xie, Yan Yan, Long Li, Zhe Zhao, Jian Wang, Moshe Tur, Andreas F. Molisch, and Solyman Ashrafi, "Recent Advances in High-Capacity Free-Space Optical and Radio-Frequency Communications using Orbital Angular Momentum Multiplexing", **Invited Paper, Philosophical Transactions of the Royal Society A,** vol. **375**, no. 2087, pp. 1-18, Feb. 2017.

142. Halina Rubinsztein-Dunlop, Andrew Forbes, M.V. Berry, M.R. Dennis, David L. Andrews, Masud Mansuripur, Cornelia Denz, Christina Alpmann, Peter Banzer, Thomas Bauer, Ebrahim Karimi, Lorenzo Marrucci, Miles Padgett, Monika Ritsch-Marte, Natalia M. Litchinitser, Nicholas P. Bigelow, C. Rosales-Guzmán, A Belmonte, J.P. Torres, Tyler W. Neely, Mark Baker, Reuven Gordon, Alex Stilgoe, Jacquiline Romero, Andrew G. White, Robert Fickler, Alan E. Willner, Guodong Xie, Benjamin McMorran, and Andrew M. Weiner, "Roadmap on Structured Light", **Invited Paper, Journal of Optics**, vol. **19**, no. 1, pp. 1-52, Jan. 2017.

    **** Selected as a "Highly Cited Paper" by Web of Science in the Physics category (top 1% in citations amongst physics publications). ****

143. Alan E. Willner, Guodong Xie, Long Li, Yongxiong Ren, Yan Yan, Nisar Ahmed, Zhe Zhao, Zhe Wang, Cong Liu, Asher Willner, Nima Ashrafi, Solyman Ashrafi, Moshe Tur, and Andreas Molisch, "Design Challenges and Guidelines for Free-Space Optical Communication Links using Orbital-Angular-Momentum Multiplexing of Multiple Beams," **Invited Paper, Journal of Optics**, vol **18**, no. 7, pp. 074014, 2016.

    **** Selected by the editors of Journal of Optics as a Highlight of 2016. ****

144. Alan E. Willner, "High Capacity Optical Communications using Orbital-Angular Momentum Beam Multiplexing," **Plenary Presentation, The International Conference on Fiber Optics and Photonics (PHOTONICS 2016)**, paper W1A.3, the Indian Institute of Technology, Kanpur,High-capacity

145. Alan E. Willner, "High-Capacity Communications using Multiplexing of Multiple Orbital-Angular-Momentum Beams," **Plenary Presentation, Physics of Quantum Electronics (PQE) Meeting**, Snowbird, UT, Jan. 2017.

146. Alan E. Willner, "Innovations Abound in Functional Optical Communications," **Plenary Presentation**, **IEEE/OSA/SPIE Asia Communications and Photonics Conference (ACP)**, Wuhan, China, Nov. 2016 (Optical Society of America, Washington, D.C., 2016).

147. Alan E. Willner, "Perspectives on Using OAM Multiplexing and Encoding for Communications," **Invited Paper, IEEE/OSA/SPIE Asia Communications and Photonics Conference Workshop on Twisting Light with Orbital Angular Momentum (OAM): Advances and Opportunities**, Wuhan, China, Nov. 2016 (Optical Society of America, Washington, D.C., 2016).

148. Joe Touch, Yinwen Cao, Morteza Ziyadi, Ahmed Almaiman, Amirhossein Mohajerin Ariaei, Alan E. Willner, "Digital Optical Processing of Optical Communications: Towards an Optical Turing Machine," **Invited Paper, Journal of Nanophotonics**, vol. **6**, no. 3, pp. 507-530, 2017.

149. Alan E. Willner, "Advocating for Optics and Photonics," **Plenary Presentation, Optics & Photonics Japan 2016**, Tokyo, Japan, Oct. 2016.

150. Alan E. Willner, Long Li, Guodong Xie, Yongxiong Ren, Hao Huang, Yang Yue, Nisar Ahmed, Moshe J. Willner, Asher J. Willner, Yan Yan, Zhe Zhao, Zhe Wang, Cong Liu, Moshe Tur, and Solyman Ashrafi,

INVITED PAPERS AND PRESENTATIONS: (CONTINUED)

"Orbital-Angular-Momentum-Based Reconfigurable Optical Switching and Routing," **Invited Paper, Photon. Res.**, vol. **4**, no. 5, pp. B5-B8, 2016.

***Journal issue cover is taken from this paper. ***

151. Alan E. Willner, "Twisted Light Could Dramatically Boost Data Rates," **Invited Feature Paper, IEEE Spectrum**, pp. 34-39, New York, August 2016.

152. Alan E. Willner, "Tunable Optical Delays with Complex Weights to Achieve Reconfigurable and High-Speed Optical-Signal-Processing Functions," **Invited Paper, IEEE Photonics Society Summer Topical Meeting**, paper MD1.2, Newport Beach, California, July 2016 (IEEE, Piscataway, NJ, 2016).

153. Alan E. Willner, "Free-Space Communications using Orbital-Angular-Momentum Multiplexing of Multiple Beams," **Invited Paper, IEEE Photonics Society Summer Topical Meeting**, paper MC3.1, Newport Beach, California, July 2016 (IEEE, Piscataway, NJ, 2016).

154. Joe Touch, Yinwen Cao, Morteza Ziyadi, Amirhossein Mohajerin Ariaei, Ahmed Almaiman and Alan E. Willner, "A Candidate Approach for Optical In-Network Computation," **Invited Paper, IEEE Photonics Society Summer Topical Meeting**, paper MD1.1, Newport Beach, California, July 2016 (IEEE, Piscataway, NJ, 2016).

155. Alan E. Willner, "Emulating and Mitigating Atmospheric Effects in Free-Space OAM-based Communications Links," **Invited Paper, Propagation Through and Characterization of Atmospheric and Oceanic Phenomena**, paper. Tu4A.3, Washington, DC, June 2016.

156. Alan E. Willner, "Physics Behind Optical Fiber Communications: Technologies that Drive the Internet Capacity Growth," **Invited Paper, American Physical Society (APS) March Meeting 2016**, Baltimore, March 2016.

157. Alan E. Willner, "Innovation in Photonics R&D," **Invited Presentation, Lloyd Greif Center for Entrepreneurial Studies, Marshall School of Business**, USC, Jan. 28, 2015 and Jan. 26, 2016.

158. Yongxiong Ren, Guodong Xie, Asher J. Willner, Nisar Ahmed, Long Li, Zhe Wang, and Alan E. Willner, "Challenges and Opportunities in using Orbital Angular Momentum for Communication Links," **Invited Presentation, Asia Communications and Photonics Conference (ACP) Workshop on Recent Advances in Space-Division Multiplexing (SDM)**, Hong Kong, China, Nov. 2015 (Optical Society of America, Wash., D.C., 2015).

159. Alan E. Willner, "High-Capacity Optical Communications using Multiplexing of Multiple Orbital-Angular-Momentum Modes," **Invited Presentation**, **2015 IEEE Photonics Santa Clara Valley Photonics Society Chapter,** Santa Clara, CA, Nov. 2015 (IEEE/LEOS, Piscataway, New Jersey, 2015).

160. Alan E. Willner, "High-Capacity Free-Space Optical Communications Using Multiplexing of Multiple Orbital-Angular-Momentum Modes," **Keynote Presentation**, **Annual International Workshop (IWOW) of the EU COST Action 1101 OPTICWISE**, Istanbul, Turkey, Sept. 2015.

161. Alan E. Willner, "The National Photonics Initiative and Integrated Photonics," **Invited Presentation**, **New York Photonics Annual Meeting**, Rochester, NY, Sept. 2015.

162. Alan E. Willner, "Optics and Photonics; Essential Technologies for our World", **Plenary Presentation**, **New Mexico International Year of Light Event**, Albuquerque, NM, Sept. 2015.

INVITED PAPERS AND PRESENTATIONS: (CONTINUED)

163. Alan E. Willner, "High-speed Communications using Multiplexing of Multiple Orbital-Angular-Momentum Beams," **Plenary Presentation**, **3rd International Conference on Optical Angular Momentum (ICOAM),** paper OAM01-65, New York, NY, Aug. 2015 (SPIE, Bellingham, Wash., 2015).

164. Jeng-Yuan Yang, Youichi Akasaka, Motoyoshi Sekiya, Amirhossein Mohajerin Ariaei, Morteza Ziyadi, Yinwen Cao, Ahmed Almaiman, Alan Willner, Joe Touch, Sigehiro Takasaka, and Ryuichi Sugizaki, "PSA and PSA-Based Optical Regeneration for Extending the Reach of Spectrally Efficient Advanced Modulation Formats," **Invited Paper, IEEE Photonics Society Summer Topical Meeting**, paper TuF2.1, Nassau, Bahamas, July 2015 (IEEE, Piscataway, NJ, 2015).

165. Alan E. Willner, "Increasing Transmission Capacity and Spectral Efficiency in Millimeter-wave Free-Space Links by Multiplexing of Multiple Orbital-Angular-Momentum Beams," **Invited Presentation, Intel Workshop**, Portland, July 2015.

166. Alan E. Willner, "High-Capacity Millimeter-Wave Communications using Orbital-Angular-Momentum Multiplexing, " **Invited Presentation, URO 5G Seminar Series**, Webcast, June 2015.

167. Alan E. Willner, Hao Huang, Yan Yan, Yongxiong Ren, Nisar Ahmed, Guodong Xie, Changjing Bao, Long Li, Yinwen Cao, Zhe Zhao, Zhe Wang, Martin P. J. Lavery, Moshe Tur, Siddharth Ramachandran, Andreas F. Molisch, Nima Ashrafi, and Solyman Ashrafi, "Optical Communications using Orbital Angular Momentum Beams," **Invited Paper**, **Advances in Optics and Photonics**, vol. **7**, no. 1, pp. 66-106, 2015.

    **** #1 cited article published in Advances in Optics and Photonics in 2015. ****
    **** #6 cited article in Advances in Optics and Photonics. ****
    **** #4 most downloaded review article on Optical Communications from Advances in Optics and Photonics and Optics Express from Sept. 2017 to Sept. 2018. ****
    **** #1 downloaded AOP paper for April and May, #5 in June and #7 in July 2015. ****
    **** #1 cited article published in the Advances in Optics and Photonics (AOP) from Mar. 2015 to Mar. 2017. ****
    **** Selected as a "Highly Cited Paper" by Web of Science in the Physics category (top 1% in citations amongst Physics publications). ****

168. Mohammad Reza Chitgarha, Amirhossein Mohajerin-Ariaei, Yinwen Cao, Morteza Ziyadi, Salman Khaleghi, Ahmed Almaiman, Joseph D. Touch, Carsten Langrock, Martin M. Fejer, and Alan E. Willner, "Tunable Homodyne Detection of an Incoming QPSK Data Signal using Two Fixed Pump Lasers," **Invited Paper**, **IEEE/OSA Journal of Lightwave Technology**, vol. **33,** pp.1344-1350, 2015.

169. Alan E. Willner, "Orbital-Angular-Momentum Multiplexing for High-Capacity Free-Space Optical Communications," **Invited Paper, Application of Lasers to Sensing and Free Space Optical Communication**, paper LTh1C.1, Arlington, VA, Jun. 2015 (Optical Society of America, Washington, D.C., 2015).

170. Avi Motil, Ido Sovran, Raanan Hadar, Arik Bergman, Asher Vokoboink, Alan Willner, and Moshe Tur, "Optical Communications using Multiplexing of Multiple Orbital-Angular-Momentum Beams," **Invited Paper**, **20th Opto-Electronics and Communications Conference (OECC)**, paper WE9F-4, Shanghai, China, June 2015.

171. Alan E. Willner, "Optics and Photonics: Essential Technologies for Society," **Invited Seminar**, **World Metrology Day Event, National Institute of Standards and Technology (NIST)**, Gaithersburg, MD, May 2015.

INVITED PAPERS AND PRESENTATIONS: (CONTINUED)

172. Alan E. Willner, "Real-time Analytics in Optical Networks: Correlation and Performance Monitoring," **Invited Presentation**, **6th Danish-Californian Workshop on Big Data and Real Time Analytics in Photonics**, University of California, Los Angeles, Mar. 2015.

173. Alan E. Willner, "Tunable Optical Delays for Implementing High-speed Optical Signal Processing Functions," **Invited Paper, Society of Photo-Instrumentation Engineers (SPIE) Photonics West**, **Slow Light, Fast Light, and Opto-Atomic Precision Metrology VIII Conference**, paper 9378-10, San Francisco, CA, Feb. 2015 (SPIE, Bellingham, Wash., 2015).

174. Alan E. Willner, "Activities of the National Photonics Initiative Related to Advanced Lithography," **Plenary Presentation**, **2015 SPIE Advanced Lithography Symposium,** San Jose, CA, Feb. 2015 (SPIE, Bellingham, Wash., 2015).

175. Amirhossein Mohajerin-Ariaei, Morteza Ziyadi, Mohammad Reza Chitgarha, and Alan E. Willner, "All-optical Implementation of Signal Processing Functions," **Invited Paper, Society of Photo-Instrumentation Engineers (SPIE) Photonics West, Optical Metro Networks and Short-Haul Systems VII Conference,** paper 9388-7, San Francisco, CA, Feb. 2015 (SPIE, Bellingham, Wash., 2015).

176. Alan E. Willner, "Structured Light," **Invited Presentation, Photonically Optimized Embedded Microprocessors (POEM) Workshop, DARPA MTO**, Phoenix, October 2014.

177. Martin P.J. Lavery, Giovanni Milione, Thien An Nguyen, Hao Huang, Guodong Xie, Dan A. Nolan, Robert R. Alfano, and Alan E. Willner, "Demonstration of Vector Mode Multiplexing and Demultiplexing in a 160 Gbit/s Free-space link," **Invited Paper**, **European Conference on Optical** Communications (ECOC), paper We.3.6.1, Cannes, France, Sept. 2014.

178. Alan E. Willner, "Advances in Optical Orbital-Angular-Momentum Multiplexing," **Invited Paper**, **International Nano-Optoelectronic Workshop** (iNOW), St. Petersburg, Russia, Aug. 2014.

179. Alan E. Willner, "High-Capacity Millimeter-Wave Communications using Orbital-Angular-Momentum Multiplexing," **Invited Presentation, URO 5G Seminar Series**, Webcast, August 2014.

180. Alan E. Willner, Hao Huang, Nisar Ahmed, Yang Yue, Moshe J. Willner,"Data Switching in Communication Networks using Orbital-Angular-Momentum Multiplexing," **Invited Paper, Advanced Photonics for Communications 2014**, paper PT1B.1, San Diego, CA, Jul. 2014 (Optical Society of America, 2014).

181. Alan E. Willner, "Optical Communications using Multiplexing of Multiple Orbital-Angular-Momentum Beams," **Plenary Presentation**, **19th Opto-Electronics and Communications Conference (OECC),** Melbourne, Australia, July 2014.

182. Alan E. Willner, "Exciting Prospects for Optical Signal Processing," **Plenary Presentation, Seventh International Photonics and OptoElectronics Meetings (POEM 2014)**, Wuhan, China, June 2014.

183. Alan E. Willner, "Free Space Optical Communications Using Orbital Angular Multiplexing: Turbulence Effects," **Invited Presentation, Seventh International Photonics and OptoElectronics Meetings (POEM 2014) Workshop on Orbital Angular Momentum (OAM) and its Applications**, Wuhan, China, June 2014.

184. Alan E. Willner, Yongxiong Ren, Hao Huang, Yan Yan, Nisar Ahmed, Guodong Xie, Jian Wang, Yang Yue, Martin P. J. Lavery, Miles J. Padgett, Moshe Tur, Nenad Bozinovic, and Siddharth Ramachandran, and Long Li,"Optical Communicationsusing Multiplexing of Multiple Orbital-Angular-Momentum Beams," **Invited Paper, Newsletter of the IEEE Lasers and Electro-Optics Society**, June. 2014 (IEEE/LEOS, Piscataway, New Jersey, 2014).

INVITED PAPERS AND PRESENTATIONS: (CONTINUED)

185. Nisar Ahmed, Hao Huang, Yongxiong Ren, Yan Yan, Guodong Xie, Moshe Tur, and Alan E. Willner, "Reconfigurable 2×2 Orbital Angular Momentum Based Optical Switching of 50-Gbaud QPSK Channels," **Invited Paper, Optics Express**, Special Issue on European Conference on Optical Communications, vol. **22**, no. 1, pp. 756-761, 2014.

186. Alan E. Willner, "U.S. Leadership Role in Optical R&D: A Researcher's (and National Academies' Optics and Photonics) Perspective," **Invited Presentation, Optoelectronics Industry Development Association (OIDA) Focus Group Meeting on Integrated Photonics Manufacturing,** Washington, May 2014.

187. Alan E. Willner, Salman Khaleghi, Mohammad Reza Chitgarha, and Omer Faruk Yilmaz, "All-Optical Signal Processing," **Invited Paper**, **IEEE/OSAJ. Lightwave Technol.**, vol. 32, no. 4, pp. 660-680, 2014.

    **** Selected as a "Highly Cited Paper" by Web of Science in the Engineering category (top 1% in citations amongst Engineering publications). ****

188. Jian Wang and Alan E. Willner"using Orbital Angular Momentum Modes for Optical Transmission," **Invited Paper**, **IEEE/OSA Conference on Optical Fiber Communications (OFC) and National Fiber Optics Engineers Conference (NFOEC)**, paper W4J.5, San Francisco, CA, Mar. 2014 (Optical Society of America, Washington, D.C., 2014).

189. Joe Touch, Joseph Bannister, Stephen Suryaputra, and Alan E. Willner, "A Design for an Internet Router With a Digital Optical Data Plane," **Invited Paper**, **Society of Photo-Instrumentation Engineers (SPIE) Photonics West**, paper 9008-8, Feb. 2014, San Francisco, CA (SPIE, Bellingham, Wash., 2014).

190. Alan E. Willner, "2D and WDM Correlators using Tunable Optical Delays," **Invited Paper**, **Society of Photo-Instrumentation Engineers (SPIE) Photonics West**, paper 8998-47, Feb. 2014, San Francisco, CA (SPIE, Bellingham, Wash., 2014).

191. Alan E. Willner, "Tbit/s Optical Communications using Multiplexing of Multiple Orbital-Angular-Momentum Modes," **Plenary Presentation**, Optical Society of Korea Winter Meeting, Feb. 2014.

192. Alan E. Willner, "Exciting Prospects for Optical Signal Processing," **Invited Seminar**, KAIST, Daejeon, Korea, Feb. 2014.

193. Alan E. Willner, "The National Academies' Report on Optics and Photonics: The Road to a National Photonics Initiative," **Invited Paper**, APS March Meeting, Denver, March 2014 (American Physical Society, NY, 2014).

194. Alan E. Willner, "Orbital Angular Momentum Multiplexing," **Invited Presentation**, **5th Danish-Californian Workshop on Photonic Technologies for Communication and Sensing**, University of California, Berkeley, Feb. 2014.

195. Alan E. Willner, "T.echnologies in Li.ghtwave Communications: Innovations (and their Needs) Abound," **Plenary Presentation**, **Asia Communications and Photonics Conference 2013**, paper AW1A.1, Beijing, China, Nov. 2013 (Optical Society of America, Washington, D.C., 2013).

196. Alan E. Willner, "Tbit/s Optical Communications using Multiplexing of Multiple Orbital-Angular-Momentum Modes," **Invited Seminar**, **IEEE Computer Society─Coastal Los Angeles Chapter**, Loyola Marymount University, Nov. 2013 (IEEE, Piscataway, NJ, 2014).

197. Alan E. Willner, "National Photonics Initiative," **Invited Presentation**, **Board on Physics and Astronomy (BPA) Fall Meeting, National Research Council**, Irvine, Nov. 2013.

INVITED PAPERS AND PRESENTATIONS: (CONTINUED)

198. Alan. E. Willner, "Optical Communications using Orbital-Angular-Momentum-Based Multiplexing" **Invited Paper**, **OSA Incubator Workshop on Structured Light in Structured Material**, Washington, DC, Sept. 2013(Optical Society of America, Washington, D.C., 2014).

199. Alan E. Willner, "Tbit/s Optical Communications using Multiplexing of Multiple Orbital-Angular-Momentum Modes," **Invited Seminar**, Tianjin University, Nov. 2013.

200. Alan E. Willner, "National Academies Perspective," **Invited Seminar**, **NSF Workshop on US-based Silicon Photonics Foundry/Fabrication Resources**, Washington, DC, Sept 2013 (Optical Society of America, Wash., D.C., 2013).

201. Alan E. Willner, "National Academies Study on Optics and Photonics: Essential Technologies for Our Nation," **Plenary Presentation**, **IEEE Optical Interconnects Conference**, Santa Fe, NM, May 2013 (IEEE, Piscataway, NJ, 2013).

202. Alan E. Willner, "Orbital Angular Momentum Transmission," **Invited Paper**, **European Conference on Optical Communications (ECOC),** paper Mo.4. A.1, London, Great Britain, Sept. 2013.

203. Alan E. Willner, "Multiplexing Information-Carrying Orthogonal Beams using Orbital Angular Momentum States," **Invited Paper**, **Frontiers in Optics Conference 2013 (FiO)**, paper FM3F.1, Oct. 2013, Orlando, FL (Optical Society of America, Wash., D.C., 2013).

204. Morteza Ziyadi, Mohammad Reza Chitgarha, Salman Khaleghi, Amirhossein Mohajerin-Ariaei, Ahmed Almaiman, Joe Touch, Moshe Tur, Carsten Langrock, Martin M. Fejer, and Alan E. Willner, "Tunable Optical Correlator using an Optical Frequency Comb and a Nonlinear Multiplexer," **Invited Paper**, **Optics Express**, Special Issue on European Conference on Optical Communications, vol. **22**, no. 1, pp. 84-89, 2014.

205. Yan Yan, Andrey Matsko, Changjing Bao, Lute Maleki, and Alan E. Willner, "Increasing the Spectral Bandwidth of Optical Frequency Comb Generation in a Microring Resonator using a Slotted Waveguide," **Invited Paper**, **IEEE Photonics Conference 2013**, paper TuD3.2, September, Bellevue, WA (IEEE, Piscataway, NJ, 2013).

**** Contributed Paper highly ranked by conference committee and upgraded to Invited Paper status. ****

206. Yi Rao, Weijian Yang, Chris Chase, Michael C. Y. Huang, D. P. Worland, Salman Khaleghi, Mohammad R. Chitgarha, Morteza Ziyadi, Alan E. Willner, and Connie J. Chang-Hasnain, "Long-Wavelength VCSEL using High Contrast Grating," **Invited Paper**, **IEEE Journal of Selected Topics in Quantum Electronics**, vol. **13**, no. 4, 2013.

207. Alan E. Willner, "Tbit/s Optical Communications using Orbital Angular Momentum," **Invited Paper**, **18th Microoptics Conference (MOC'13)**, Tokyo, Japan, Oct. 2013.

208. Yongxiong Ren, Hao Huang, Guodong Xie, Nisar Ahmed, Baris Erkmen, Nivedita Chandrasekaran, Martin Lavery, Jeffrey Shapiro, Nicholas Steinhoff, Moshe Tur, Miles Padgett, Robert Boyd,and Alan Willner, "Experimental Turbulence Effects on Crosstalk and System Power Penalty over a Free Space Optical Communication link usingOrbital Angular Momentum Multiplexing," **Invited Paper**, **APS/IEEE/OSA Conference on Lasers and Electro-Optics (CLEO)**, paper CM2G.4, San Jose, CA, June 2013 (Optical Society of America, Wash., D.C., 2013).

**** Contributed Paper highly ranked by conference committee and upgraded to Invited Paper status. ****

209. Alan E. Willner, "National Academies Study on 'Optics and Photonics: Essential Technologies for Our Nation,'" **Invited Paper, IEEE Avionics, Fiber-Optics and Photonics Conference (AVFOP),** San Diego, CA, May 2013 (IEEE, Piscataway, NJ, 2013).

INVITED PAPERS AND PRESENTATIONS: (CONTINUED)

210. Alan E. Willner, "Optics and Photonics: Essential Technologies for Our Nation," **Invited Presentation**, **Division Committee on Engineering and Physical Sciences (DEPS) Spring Meeting, National Research Council**, Washington, March 2013.

211. Alan E. Willner, "Terabit/sec Free-Space Data Transmission using Orbital Angular Momentum," **Invited Paper**, **The 43rd Winter Colloquium on the Physics of Quantum Electronics (PQE)**, Snowbird, UT, Jan. 2013.

212. Robert W. Boyd, Mehul Malik, Mohammad Mirohosseini, Colin O'Sullivan, Brandon Rodenburg, Zhimin Shi, Daniel J. Gauthier, Miles J. Padgett, Martin P.J. Lavery, Stephen M. Barnett, Alan Willner, and Yongxiong Ren, "Orbital-Angular-Momentum Encoding for Free Space QKD," **Invited Paper**, **The 43rd Winter Colloquium on the Physics of Quantum Electronics (PQE)**, Snowbird, UT, Jan. 2013.

213. Alan E. Willner, "Multiplexing Vortex Beams for Tbit/s Free-Space Optical Communications," **Invited Paper**, **Society of Photo-Instrumentation Engineers (SPIE) Photonics West,** paper 8610-4, Feb. 2013, San Francisco, CA (SPIE, Bellingham, Wash., 2013).

214. Alan E. Willner, "Reconfigurable Optical Networking Functions using Orbital Angular Momentum," I**nvited Paper**, **Society of Photo-Instrumentation Engineers (SPIE) Photonics West,** paper 8647-4, Feb. 2013, San Francisco, CA (SPIE, Bellingham, Wash., 2013).

215. Alan E. Willner, "Optical Techniques for Generating and Demultiplexing Higher-Order Modulation Formats," **Invited Paper**, **Society of Photo-Instrumentation Engineers (SPIE) Photonics West,** paper 8646-21, Feb. 2013, San Francisco, CA (SPIE, Bellingham, Wash., 2013).

216. Alan E. Willner, Jian Wang, and Hao Huang, "Applied Physics Perspective: A Different Angle on Light Communications," **Invited Paper**, **Science**, vol. **337**, no. 6095, pp. 655-656, 10 August 2012.

217. Alan E. Willner, Robert L. Byer, Constance J. Chang-Hasnain, Steven Forrest, Henry Kressel, Herwig Kogelnik, Guillermo J. Tearney, Charles H. Townes, and Michalis Zervas, "Optics and Photonics: Key Enabling Technologies," **Invited Paper**, **Proceedings of the IEEE**, Special Centennial Issue, vol. **100**, pp. 1604-1643, May 2012.

218. Alan E. Willner, R.L. Byer, C.J. Chang-Hasnain, S.R. Forrest, H. Kressel, H. Kogelnik, G.J. Tearney, C.H. Townes, and M.N. Zervas, "Prolog to the Section on Optics and Photonics," **Invited Paper**, **Proceedings of the IEEE**, Special Centennial Issue, vol. **100**, pp. 1600-1603, May 2012.

219. L.-S. Yan, A.E. Willner, X. Wu, A.-L. Yi, A. Bogoni, Z.-Y. Chen, and H.-Y. Jiang, "All-Optical Signal Processing for Ultra-High Speed Optical Systems and Networks," **Invited Paper**, **IEEE/OSA Journal of Lightwave Technology**, vol. 30, no. 24, pp. 3760-3770, 2012).

220. Alan E. Willner, "Terabit/sec Free-Space Data Transmission using Orbital Angular Momentum," **Invited Paper**, **International Nano-Optoelectronic Workshop** (iNOW), Berkeley, CA, Aug. 2012.

221. Alan E. Willner and J. Wang, "Optical Communications using Light Beams Carrying Orbital Angular Momentum,"**Invited Paper**, in Special Symposium on "Singular Light: Applications of Vortices, Orbital angular momentum, Bessel and Airy beams," **APS/IEEE/OSA Conference on Lasers and Electro-Optics (CLEO)**, paper JTu2K.1, San Jose, MD, May 2012 (Optical Society of America, Wash., D.C., 2012).

222. Alan E. Willner and Scott R. Nuccio, "Electro-Optic Polymer Modulators," **Invited Paper**, **IEEE/OSA Conference on Optical Fiber Communications (OFC) and National Fiber Optics Engineers Conference (NFOEC),** Los Angeles, CA, Mar. 2012 (Optical Society of America, Washington, D.C., 2012).

INVITED PAPERS AND PRESENTATIONS: (CONTINUED)

223. Y. Rao, C. Chase, M. C.Y. Huang, S. Khaleghi, M. R. Chitgarha, M. Ziyadi, D. P. Worland, A.E. Willner, and C. J. Chang-Hasnain,"Tunable 1550-nm VCSEL using High Contrast Gratings," **Invited Paper, IEEE Photonics Conference 2012**, paper WU4, September, Burlingame, CA (IEEE, Piscataway, NJ, 2012).

224. Alan E. Willner, "Optical Tapped-Delay-Lines," **Invited Presentation**, in Workshop "All-optical Signal Processing: Next-generation Materials," **IEEE/OSA Conference on Optical Fiber Communications (OFC) and National Fiber Optics Engineers Conference (NFOEC),** Los Angeles, CA, Mar. 2012 (Optical Society of America, Washington, D.C., 2012).

225. Jian Wang and A. E. Willner, "Review of Robust Data Exchange using Optical Nonlinearities," **InvitedReview Article**, **International Journal of Optics**, Special Issue of "Optical Parametric Processing", vol. **2012**, Article ID 575429, 25 pages (doi:10.1155/2012/575429), 2012.

226. Alan E. Willner, "Tunable Optical Tapped-Delay-Lines for Signal Processing Applications,"**Invited Paper**, **Society of Photo-Instrumentation Engineers (SPIE) Photonics West,** paper 8273-40, Jan. 2012, San Francisco, CA (SPIE, Bellingham, Wash., 2012).

227. Alan E. Willner, Yang Yue, Hao Huang, and Lin Zhang, "Signal Propagation Effects in HCG Hollow-Core Waveguides,"**Invited Paper, Society of Photo-Instrumentation Engineers (SPIE) Photonics West,** paper 8270-15, Jan. 2012, San Francisco, CA (SPIE, Bellingham, Wash., 2012).

228. Alan E. Willner, O. Yilmaz, J. Wang, X. Wu, A. Bogoni, L. Zhang, and S.R. Nuccio, "Optically Efficient Nonlinear Signal Processing," **Invited Paper, IEEEJournal of Selected Topics in Quantum Electronics,** Special Issue on Green Photonics, vol. 17, pp. 320-332, 2011.

229. A.E. Willner, "Optical Communications: Innovations (and Their Needs) Abound," **Plenary Paper**, **IEEE Co-Sponsored 45th Annual Conference on Information Sciences and Systems** (CISS), Johns Hopkins University, Baltimore, March 2011.

230. A.E. Willner, Z. Pan, and M. I. Hayee, "Major Accomplishments in 2010 on Optical Fiber Communications," **Invited Paper**, **IEEE Photonics Journal**, vol. 3, no. 2, pp. 320-324, 2011.

231. A.E. Willner, "All-Optical Signal Processing using Optical Nonlinearities," **Invited Paper**, OSA Topical Meeting on Signal Processing in Photonic Communications (SPPCom), OSA Optics & Photonics Congress on "Advanced Photonics," paper SPMC1, Toronto, Canada, June 2011 (Optical Society of America, Washington, DC, 2011).

232. A.E. Willner, "Nonlinear Optics in Optical Fiber Communications: *For Worse and For Better,*"**Invited Presentation, *Quantum Electronics Seminar,*** Stanford University, Oct. 31, 2011.

233. A.E. Wilner, "T.echnologies in Li.ghtwave: From (Cavity) Modes to (WDM) Nodes," Pl**enary Presentation**, **2011 International Symposium on Information Photonics & Optical Communications**, July 2011, Chengdu, China.

234. A.E. Willner, "All-Optical Signal Processing using Optical Nonlinearities," **Invited Presentation**, **5th International Symposium on Ultrafast Photonic Technologies**, at HHI in Berlin, Sept. 2011.

235. A.E. Willner, S.R. Nuccio, and O. Yilmaz, "Recent Advances in Tunable Optical Delays and Their Applications,"**Invited Paper, Society of Photo-Instrumentation Engineers (SPIE) Photonics West,** Conference 7949, paper 7949-7, Jan. 2011, San Jose, CA (SPIE, Bellingham, Wash., 2011).

236. Lin Zhang, Yang Yue, and Alan E. Willner, "Micro-Resonator Devices for Optical Broadband Access Application," **Invited Paper, Society of Photo-Instrumentation Engineers (SPIE) Photonics West,**

INVITED PAPERS AND PRESENTATIONS: (CONTINUED)

Broadband Access Communication Technologies V Conference 7959, paper 7959-2, Jan. 2011, San Jose, CA (SPIE, Bellingham, Wash., 2011).

237. A.E. Willner, "All-Optical Signal Processing using Optical Nonlinearities," **Invited Seminar**, **Bar Ilan University**, Israel, July 26, 2011.

238. A.E. Willner, L. Zhang, and Y. Yue, "Tailoring of Dispersion andNonlinear Properties of Integrated Silicon Waveguides for SignalProcessing Applications," **Invited Paper**, **IOPSemiconductor Science and Technology**, Special Issue Honoring Zhores Alferov: From Heterostructures to Nanostructures, vol.**26**, no. 1, paper 014044, Jan. 2011.

239. Zahra Bakhtiari, Jian Wang, Xiaoxia Wu, Jeng-Yuan Yang, Robert Hellwarth, and Alan E. Willner, "Demonstration of 10-40-Gbaud Baud-Rate-Tunable Optical Generation of 16-QAM from a QPSK Signal using a Variable DGD Element," **Invited Paper, Conference on Lasers and Electro-Optics (CLEO)**, paper CThY5, Baltimore, MD, May 2011 (Optical Society of America, Wash., D.C., 2011).

**** Contributed Paper highly ranked by conference committee and upgraded to Invited Paper status. ****

240. A.E Willner, "Optical Communications: Innovations (and Their Needs) Abound," **Invited Presentation, IEEE Student Chapter at USC**, Nov. 1, 2011.

241. A. Bogoni, L. Potì, A. Willner, P. Ghelfi, C. Porzi, M. Scaffardi, G. Meloni, G. Berrettini, F. Fresi, E. Lazzeri, and X. Wu, "Overview on Optical Logic Elementary Circuits," **Invited Paper**, **Journal of IET Circuits, Devices & Systems**, vol. 5, pp. 76-83, 2011.

242. A.E. Willner, "Towards Robust and Reconfigurable Optical Communication Systems," **Plenary Paper, Third International Photonics and OptoElectronics Meetings (POEM 2010)**, Wuhan, China, Nov. 2010.

243. A.E. Willner, "Optical Performance Monitoring," **Invited Paper, IEEE Avionics, Fiber-Optics and Photonics Conference (AVFOP),** paper WA1, Denver, CO, Sept. 2010 (IEEE, Piscataway, NJ, 2010).

244. Alan E. Willner, Lin Zhang, Yang Yue, and Xiaoxia Wu, "Integrated Nano-Structured Silicon Waveguides and Devices for High-Speed Optical Communications," **Invited Paper**, **Chinese Optics Letters**, Special Issue on Science and Technology for High-Speed Optical Communications, vol. **8**, no. 9, pp. 909-917, 2010.

245. A.E. Willner, "Dispersion and Nonlinearity Tailoring using Slotted Waveguides," **Invited Paper**, **IEEE Photonics Society 21st Annual Workshop on Interconnections Within High-Speed Digital Systems**, Santa Fe, May 2010 (IEEE, Piscataway, NJ, 2010).

246. Scott R. Nuccio, Omer F. Yilmaz, Xue Wang, Jian Wang, Xiaoxia Wu, Alan E. Willner, "1.16-μs Continuously Tunable Optical Delay of a 100-Gb/s DQPSK Signal using Wavelength Conversion and Chromatic Dispersion in an HNLF," **Invited Paper, Conference on Lasers and Electro-Optics (CLEO)**, paper X, San Jose, CA, May 2010 (Optical Society of America, Wash., D.C., 2010).

**** Contributed Paper highly ranked by conference committee and upgraded to Invited Paper status. ****

247. A.E. Willner, "U.S. Leadership Role in R&D: A Researcher's Perspective," **Invited Paper, Optoelectronics Industry Development Association (OIDA) Annual Forum**, Arlington, VA, Nov. 2010.

248. A.E. Willner, "Towards Robust and Reconfigurable Optical Communication Systems," **Invited Seminar**, **CREOL, Univ. of Central Florida**, IEEE Photonics Society Student Local Chapter, Orlando, June 2010.

249. A.E. Willner, "Towards Robust and Reconfigurable Optical Communication Systems," **Invited Seminar**, Stanford University, **OSA/SPIE Student Chapter Seminar Series**, May 2010.

INVITED PAPERS AND PRESENTATIONS: (CONTINUED)

250. Antonella Bogoni, Xiaoxia Wu, Jian Wang, Alan E. Willner, "Ultra-Fast All Optical Signal Processing and Switching Based on PPLN Waveguides," **Invited Paper, OSA Topical Meeting on Photonics in Switching**, paper PWA1, Monterey, CA, July (Optical Society of America, Wash., D.C., 2010).

251. A.E. Willner, "A Researcher's Perspective to the Energy Issue," **Invited Presentation, OSA Topical Meeting on Photonics in Switching**, Workshop 1: Energy Efficient Networking and Systems, Monterey, CA, July (Optical Society of America, Wash., D.C., 2010).

252. A.E. Willner, "Efficient Communications for Access and Interconnects," **Invited Presentation**, **Annual Danish-Californian Workshop on Photonic Technologies for Access and Interconnects**, Stanford University, CA, Jan.2010.

253. Zhongqi Pan, Changyuan Yu, and Alan E. Willner, "Optical Performance Monitoring for the Next Generation Optical Communication Networks," **Invited Paper**, **Journal of Optical Fiber Technology**, vol. **16**, pp. 20-45, 2010.

254. A.E. Willner, "Writing Your CV and Cover Letter," **Invited Seminar**, **USC Center for Excellence in Teaching** (CET) 2010 Academic Careers Week Program, Oct. 2010.

255. A.E. Willner, "A Broader-Bandwidth Optical Network," **Keynote Paper, 14th Opto-Electronics and Communications Conference (OECC),** Hong Kong, July 13, 2009.

256. Alan E. Willner, "Optical Communications: Innovations (and Their Needs) Abound," **Plenary Presentation**, **IPOS Launch and Symposium: Faster, Further, Smarter**, Institute of Photonics and Optical Science, Univ. of Sydney, April 2009.

257. Alan E. Willner, "Towards High-Performance and Reconfigurable Optical Communication Networks," **Invited Presentation**, **Distinguished Lecturer Series**, Dipartimento di Ingegneria dell'Informazione, Universita' di Padova, Italy, 2009.

258. M. Scaffardi, P Ghelfi, C. Porzi, G. Meloni, G. Berrettini, A. Malacarne, F. Fresi, E. Lazzeri, J. Wang, X. Wu, I. Fazal, A. Willner, L. Potì, A. Bogoni, "Photonic Digital Processing for Enabling Next Generation Optical," **Invited Paper, IEEE Photonics in Switching Meeting**, paper WeI2-5, Pisa, Italy, Sept. 2009 (IEEE, Piscataway, NJ, 2009).

259. Alan E. Willner, "Advanced Optical Communication Functions using Nanophotonic Devices," **Invited Paper**, **International Nano-Optoelectronic Workshop** (iNOW) (sponsored by U.S. and German NSF), Stockholm, Aug. 2009.

260. A.E. Willner, "Enhancing Optical Communication Systems by using Advanced OE Devices," **Invited Paper, The 12th Meeting on Optical Engineering and Science in Israel (2nd OASIS)**, Association of Engineers and Architects in Israel, Tel Aviv, March 2009.

261. A.E. Willner, "Optical Communications: Innovations (and Their Needs) Abound," **Invited Seminar**, **W.V.T. Rusch Engineering Honors Colloquium**, USC Viterbi School of Engineering, Feb. 2009.

262. Alan E. Willner, "Advanced Optical Signal Processing Functions using Integrated Photonics," **Invited Paper**, **Center for High Technology Materials (CHTM) Silver Event**, Univ. of New Mexico, Aug. 2009.

263. Alan E. Willner, "Acute Need for Optical Chip Fab & Packaging: An Academic User's Perspective," **Invited Presentation**, **Workshop on Photonics Engineering Prototyping Resource** (PEPR) (sponsored by Air Force Research Laboratory), Dayton, OH, July 2009.

INVITED PAPERS AND PRESENTATIONS: (CONTINUED)

264. A.E. Willner, "Achieving Tunable Delays using Wavelength Conversion," **Invited Paper, Society of Photo-Instrumentation Engineers (SPIE) Photonics West, Conference on Advances in Slow and Fast Light II (OPTO OE116),** paper 7226-11, Jan. 2009, San Jose, CA (SPIE, Bellingham, Wash., 2009).

265. Alan E. Willner, "Optical Communications: Innovations (and their Needs) Abound," **Invited Presentation, Colloquium Lecture Series**, College of Optical Sciences, Univ. of Arizona, March 5, 2009.

266. Alan Willner, "Negotiating an Academic Job Offer," **Invited Seminar**, **USC Center for Excellence in Teaching (CET) Seminar**, Oct. 2009.

267. A.E. Willner, B. Zhang, L. Zhang, L.-S. Yan, and I. Fazal, "Optical Signal Processing using Tunable Delay Elements Based on Slow Light," **Invited Paper, IEEE Journal of Selected Topics in Quantum Electronics**, Special Issue on Nonlinear Optical Signal Processing, vol. **14**, pp. 691-705, 2008.

268. Alan E. Willner, "Optical Communications: Innovations (and their Needs) Abound," **Invited Presentation**, **100th Anniversary of Corning's R&D, Corning's Stookey Award Ceremony,** Corning R&D Laboratories, Corning, NY, Oct. 2008.

269. A.E. Willner, "Stable and Reconfigurable High-Capacity Optical Networks," **Plenary Paper**, **IEEE Photonics Global Singapore (IPGC 2008)**, 7th Int'l Conference on Optical Communications & Networks (ICOCN), Singapore, Dec. 2008.

270. Alan E. Willner, "Towards Stable and Reconfigurable High-Capacity Optical Networks,"**Plenary Paper, International Conference on Optics and Photonics in Taiwan 2008**, paper Fri-AP-01, Taipei, Taiwan, Dec. 2008.

271. A.E. Willner, "Targeted Optical Signal Processing for High-Performance Optical Networking," **Plenary Paper, CS/IEICE/IEEE Conference on Photonics in Switching**, Saporro, Japan, Aug. 2008.

272. A.E. Willner, "Future Broader-Bandwidth Optical Communication Systems," **Plenary Paper, IEEE Lasers and Electro-Optics Society Summer Topical Meeting on Mitigating Channel Degrading Effects**, Proceedings, Acapulco, Mexico, July 21-23, 2008 (IEEE, Piscataway, NJ, 2008).

273. Alan Willner, "Towards High-Performance and Reconfigurable Optical Communication Networks," **Invited Seminar, Applied Physics Seminar Series, California Institute of Technology** (Caltech), Nov. 2008.

274. Alan E. Willner, "Optical Communications: Innovations (and their Needs) Abound,"**Invited Presentation, Distinguished Lecture, The Annual Boris Stoicheff Lecture**, Jointly by the Institute of Optical Sciences (Univ. of Toronto) and he Royal Canadian Institute, Dec. 2008.

275. Alan E. Willner, "Towards High-Performance and Reconfigurable Optical Communication Networks," **Invited Seminar, IEEE ComSoc and LEOS Baltimore Chapter Seminar Series**, Oct. 2008.

276. Alan E. Willner, "Optical Performance Monitoring for Reconfigurable Optical Networks," **International Nano-Optoelectronic Workshop (iNOW)**, Japan, Aug. 2008.

277. Lin Zhang, Muping Song, Raymond G. Beausoleil and Alan E. Willner, "Embedded Ring Resonators," **Invited Paper** for Winner of LEOS Figure Contest, IEEE LEOS Newsletter, vol. 22, no. 6, pp. 21-22, 2008.

278. A.E. Willner, "High-Performance Gbit/s Data Transmission Through Slow Light Elements," **Invited Paper, Optical Society of America (OSA) Topical Meeting on Slow and Fast Light**, paper SMC1, Boston, July 2008 (OSA, D.C., 2008).

279. Alan E. Willner and Lin Zhang, "Physical Layer Challenges of On-Chip Optical Interconnects," **Invited Presentation**, **HP Photonic Interconnect Forum**, Hewlett-Packard Laboratories, Palo Alto, CA, May 2008.

INVITED PAPERS AND PRESENTATIONS: (CONTINUED)

280. A.E. Willner, "Value of Societies to Your Career: Plant the Flag to be a Leader," **Invited Presentation,** OSA Student Activities Workshop, **Conference on Lasers and Electro-Optics (CLEO)**, San Jose, CA, May 2008 (Optical Society of America, Wash., D.C., 2008).

281. A.E. Willner and B. Zhang, "Tunable Delay Lines using Slow Light for Gbit/s Data Signals," **Invited Paper, Society of Photo-Instrumentation Engineers (SPIE) Photonics West, Conference on Advances in Slow and Fast Light (OE21),** paper 6904-09,Jan. 2008, San Jose, CA (SPIE, Bellingham, Wash., 2008).

282. A.E. Willner, "All-Optical Signal Processing in Next-Generation Communication Systems" **Invited Presentation,** Workshop OMD on All-Optical Signal Processing and Conditioning, **Conference on Optical Fiber Communications (OFC)**, San Diego, CA, Feb. 2008.

283. A.E. Willner, "Specialty Fibers to Realize Signal Processing Functions," **Invited Presentation,** Workshop OSuA on "Is Optical Transmission Fiber a Commodity or is Further Innovation Required?," **Conference on Optical Fiber Communications (OFC)**, San Diego, CA, Feb. 2008.

284. A.E. Willner, "Systems Requirements for Signal Processing using Parametric Processes," **Invited Presentation,** Workshop OMD on All-Optical Signal Processing and Conditioning, **Conference on Optical Fiber Communications (OFC)**, San Diego, CA, Feb. 2008

285. Alan E. Willner, "Optical Networking Perspectives vs. Optical Technologies Reality," **Keynote Presentation**, **ONDM Conference COST 291 Workshop**, International Federation of Information Processing (IFIP), Athens, Greece, May 2007.

286. A.E. Willner, "Opportunities & Challenges in Optical Networking," **Plenary Presentation**, **9th International Conference on Transparent Optical Networks** (ICTON), Rome, Italy, July 2007.

287. A.E. Willner, "Robust and Reconfigurable Optical Communication Systems," **Plenary Presentation**, Workshop on Optical Communications, **Advanced Communications Center,** Tel Aviv University, Dec. 2007.

288. A.E. Willner, "Stable and Reconfigurable Optical Networks,"**Invited Paper**, **IEEE Lasers and Electro-Optics Society Annual Meeting 2007**, paper WFF1, Orlando, Oct. (IEEE, Piscataway, NJ, 2007).

289. Yannick Keith Lize, Xiaoxia Wu, Louis Christen, Mathieu Faucher, and Alan E. Willner, "Free Spectral Range and Optical Filtering Optimization in NRZ-, RZ- and CSRZ-DPSK Demodulation," **Invited Paper**, **IEEE Lasers and Electro-Optics Society Annual Meeting 2007**, paper MP1, Orlando, Oct. (IEEE, Piscataway, NJ, 2007).

**** Contributed Paper highly ranked by conference committee and upgraded to Invited Paper status. ****

290. Alan E. Willner, Poorya Saghari, and Vahid R. Arbab, "Advanced Techniques to Increase the Number of Users and Bit Rate in OCDMA Networks," **Invited Paper, IEEE Journal of Selected Topics in Quantum Electronics**, Special Issue on Optical Codes in Optical Communications and Networks, vol. **13**, pp. 1403-1414, 2007.

291. A.E. Willner, "The Resume Process: Not it, but about it," **Invited Presentation**, **USC Academic Careers Week**, Oct. 2007.

292. A.E. Willner, "Managing Multiple Roles for Faculty: Just say no, sometimes," **Invited Presentation**, **USC's Academic Leadership and Development Workshop on Managing Multiple Roles as Faculty**, November 2007.

INVITED PAPERS AND PRESENTATIONS: (CONTINUED)

293. Alan E. Willner, "Physical-Layer Challenges in Stable, High-Capacity Optical Communication Networks," **Invited Presentation**, Dept. of Applied Physics Seminar Series, Hebrew University, June 6, 2007.

294. A.E. Willner, "Tunable Optical Delay Lines for Switching and Processing," **Invited Paper, IEEE Photonics in Switching Topical Meeting**, San Francisco, Aug. 2007 (IEEE, Piscataway, NJ, 2007).

295. Alan E. Willner, "Physical-Layer Challenges in Stable, High-Capacity Optical Communication Networks," **Invited Colloquium, Institute of Optics**, University of Rochester, Rochester, NY, Feb. 2007.

296. Alan E. Willner, "Monitoring and Channel Measurements to Enable Stable, High-Capacity Optical Networks," **Invited Seminar**, NIST, Boulder, Colorado, Feb. 2007.

297. A.E. Willner, "Leverage the Show Floor to Your Advantage," **Invited Presentation,** Student Activities Workshop, **Conference on Lasers and Electro-Optics (CLEO)**, Baltimore, MD, May 2007 (Optical Society of America, Wash., D.C., 2007).

298. Alan E. Willner, "Physical-Layer Challenges in Stable, High-Capacity Optical Communication Networks," **Keynote Paper, Asia Optical Communications and Optoelectronics Exhibition** (AOE), Shanghai, China, Oct. 2006.

299. A.E. Willner, "Optical Performance Monitoring for Robust Optical Networks," **Invited Seminar**, Dept. of Electrical Engineering, Univ. of Melbourne, Melbourne, Australia, Oct. 2006.

300. Alan E. Willner, "Photonic Integration for Smart and Robust Communication Systems," **Plenary Presentation**, MIT Center for Integrated Photonic Systems (CIPS) Annual Meeting, May 5, 2006.

301. Zhaoming Zhu, Andrew M.C. Dawes, Daniel Gauthier, Michael D. Stenner, Mark A. Neifeld, Ting Luo, Changyuan Yu, Lin Zhang, and Alan E. Willner, "Recent Advances in Stimulated Brillouin Scattering Slow Light," **Invited Paper, OSA Topical Meeting on Slow and Fast Light**, paper TuB1, July 2006, D.C. (OSA, D.C., 2006).

302. Alan E. Willner, "Photonic Integration for Smart and Robust Communication Systems," **Invited Presentation**, UC Berkeley Summer School, **Nano-Opto Workshop** (NOW, CONSRT), Aug. 14, 2006.

303. C. Langrock, S. Kumar, J.E. McGeehan, A.E. Willner, and M.M. Fejer,"All-Optical Signal Processing using $\chi(2)$ Nonlinearities in Guided Wave Devices," **Invited Paper,IEEE/OSA Journal of Lightwave Technology**, Special Issue on Optical Signal Processing, vol. **24**, pp. 2579-2592, 2006.

304. L.-S. Yan, X. Steve Yao, M.C. Hauer, and A.E. Willner, "Practical Solutions to Polarization-Mode-Dispersion Emulation and Compensation," **Invited Paper**, **IEEE/OSA Journal of Lightwave Technology**, Special Issue on Polarization Effects, vol. **24**, no. 11, pp. 3992-4005, 2006.

305. Alan E. Willner, "The Optical Network of the Future: Can Optical Performance Monitoring Enable Automated, Intelligent and Robust Systems?," **Invited Paper**, **Optics and Photonics News**, pp. 30-35, March, 2006.

306. Alan E. Willner, "Physical-Layer Challenges in Stable, High-Capacity Optical Communication Networks," **Invited Presentation**, Annual Research Review of the NSERC Research Center on Agile All-Photonics Networks (AAPN), Ottawa, Canada, June 15, 2006.

307. Alan E. Willner, "Self-Managing Intelligent Optical Networks for Smarter, Tougher, and Cheaper Systems," **Invited Paper**, **Society of Photo-Instrumentation Engineers (SPIE) Newsroom,** Manuscript 743 (10.1117/2.1200603.0128), April 2006 (SPIE, Bellingham, Wash., 2006).

INVITED PAPERS AND PRESENTATIONS: (CONTINUED)

308. Alan E. Willner, "Physical-Layer Challenges in Stable High-Capacity Optical Communication Networks," **Invited Presentation**, Seminar Series, Dept. of Electrical and Computer Engineering, UC San Diego, La Jolla, CA, May 19, 2006.

309. A.E. Willner, L. Zhang, T. Luo, C. Yu, W. Zhang, and Y. Wang, "Data Bit Distortion Induced by Slow Light in Optical Communication Systems," **Invited Paper, Society of Photo-Instrumentation Engineers (SPIE) Photonics West, Symposium on Integrated Optoelectronic Devices,** paper 6130-29, pp. 175-192, Jan. 2006, San Jose, CA (SPIE, Bellingham, Wash., 2006).

310. A.L. Gaeta, J.E. Sharping, Y. Okawachi, S. Ghosh, M. Bigelow, A. Schweinsberg, R.W. Boyd, Z. Zhu, D.J. Gauthier, Y. Wang, and A.E. Willner, "Slow Light in Optical Fibers," **Invited Paper, Society of Photo-Instrumentation Engineers (SPIE) Photonics West, Symposium on Integrated Optoelectronic Devices,** paper 6130-02, Jan. 2006, San Jose, CA (SPIE, Bellingham, Wash., 2006).

311. A.E. Willner, "Future Highly-Efficient Optical Networks," **Invited Paper, Conference on Lasers and Electro-Optics (CLEO)**, paper CTuX3, pp. 1052-1054, Baltimore, MD, May 2005 (Optical Society of America, Wash., D.C., 2005).

312. Alan E. Willner, Louis C. Christen, John E. McGeehan, Yan Wang, Saurabh Kumar, and Irfan Fazal, "Physical Layer Routing in Free-Space Optical Networks," **Invited Paper, Newsletter of the IEEE Lasers and Electro-Optics Society**, Special Issue on Free Space Optical Communications, vol. **19**, no. 5, Oct. 2005 (IEEE/LEOS, Piscataway, New Jersey, 2005).

313. A.E. Willner and J.E. McGeehan, "Physical Layer Routing Issues in Free-Space Optical Communication Networks," **Invited Paper, IEEE Lasers and Electro-Optics Society Summer Topical Meeting on Free-Space Communication Techniques for Optical Networks**, Proceedings, paper MA3.3, San Diego, CA, July 25-27 (IEEE, Piscataway, NJ, 2005).

314. Martin M. Fejer and Alan E. Willner, "Digital Signal Processing using Periodically-Poled Lithium-Niobate Waveguides," **Invited Paper, IEEE Lasers and Electro-Optics Society Summer Topical Meeting on Optical Signal Processing**, Proceedings, paper TuC1.1, San Diego, CA, July 25-27 (IEEE, Piscataway, NJ, 2005).

315. Alan E. Willner, "Technical Innovations Needed to Build Optical Networks," **Invited Presentation**, **NSF-Sponsored Workshop** on "The Future of Optical Communications: Understanding the Choices," Santa Barbara, Feb. 2005.

316. A.E. Willner, "Transmission Challenges in 40-Gbit/s Networks," **Invited Paper, Optoelectronics Industry Development Association (OIDA) PTAP 40 Gbit/s Workshop**, Chicago, May 2005.

317. A.E. Willner, "FBG-Based Optical Correlators for Networking," **Invited Paper, Bragg Gratings, Poling & Photosensitivity/ 30th Australian Conference on Optical Fibre Technology (ACOFT/BGPP)**, Sydney, Australia, July 2005.

318. A.E. Willner, S.M.R. Motaghian Nezam, L.-S. Yan, Z. Pan, and M.C. Hauer, "Monitoring and Control of Polarization-Related Impairments in Optical Fiber Systems," **Invited Paper, IEEE/OSA Journal of Lightwave Technology**, Special Issue on the Conference on Optical Fiber Communications, vol. **22**, pp. 106-125, 2004.

319. Alan E. Willner, "Emerging Issues in Optical Fiber Communication Systems," **Plenary Paper,** Joint Plenary Session of the 2004 **Australian Conference on Fibre Technology** (ACOFT) and the **Australian Optical Society Annual Meeting**, Canberra, Australia, July 7, 2004.

INVITED PAPERS AND PRESENTATIONS: (CONTINUED)

320. A.E. Willner, S. Kumar, B. Zhang, and E. Pakbaznia, "Physical Impairments and Network Limitations When Interconnecting Multiple DOD-N Routers," **Invited Paper**, **IEEE Lasers and Electro-Optics Society Annual Meeting 2004**, Special Symposium on DARPA's DOD-N Program, paper MI5, Puerto Rico, Nov. (IEEE, Piscataway, NJ, 2004).

321. A.E. Willner and M.C. Hauer, "PMD Emulation," **Invited Paper**, **Journal of Optical and Fiber Communications Reports, Springer-Verlag**, vol. **1**, no. 3, pp. 181-200, 2004.

322. A.E. Willner, "Communications Overview: A Converged, Robust Future in Communications," **Invited Paper, DARPA MTO Symposium on Photonics**, Session WE2, San Francisco, CA, Dec. 2004.

323. A.E. Willner, "Monitoring, Security & Routing in High-Capacity Optical Networks," **Invited Paper, Cisco Systems Optical Daze Symposium**, Dec. 2004

324. Z. Pan, A.E. Willner, C. Yu, and Y. Wang, "Applications of Highly Nonlinear Fiber in WDM Communications Systems," **Invited Paper**, **OSA/SPIE Optics in the Southeast**, paper D2, November 4-5, Charlotte, North Carolina, 2004.

325. A.E. Willner, "Monitoring and Emulation of Fiber-Based Dispersive Effects," **Invited Paper, IEEE Lightwave Technologies in Instrumentation & Measurement Conference**, paper LTIMC-28, Palisades, NY, Oct. 2004 (IEEE, Piscataway, NJ, 2004).

326. A.E. Willner, "Systems Applications for Slow Light Technologies," **Invited Paper, CRI (Charlotte Research Institute) Conference on Slow Light**, Univ. of North Carolina, Charlotte, NC, July 2004.

327. A.E. Willner, "High-Capacity Optical Systems and Networks," **Invited Presentation, Nerd Lunch Seminar Series,** Cisco Systems, San Jose, Jun 2004.

328. Y. Wang, C. Yu, T. Luo, and A. E. Willner, "Systems Applications of Highly Nonlinear Optical Fiber," **Invited Paper, Optoelectronics Industry Development Association (OIDA) PTAP Participant's Review**, Koloa, Kauai, HI, April 19, 2004.

329. A.E. Willner, Y.-W. Song, J. McGeehan, Z. Pan, and B. Hoanca, "Dispersion Management," **Invited Paper**, **Encyclopedia of Modern Optics**, pp. 353-365, edited by Robert D. Guenther, Duncan G. Steel and Leopold Bayvel, Elsevier, Oxford, ISBN 0-12-227600-0, 2004.

330. S. Lee and A.E. Willner, "Optical Communication Systems: Basic Concepts," **Invited Paper**, **Encyclopedia of Modern Optics**, pp. 376-386, edited by Robert D. Guenther, Duncan G. Steel and Leopold Bayvel, Elsevier, Oxford, ISBN 0-12-227600-0, 2004.

331. A.E. Willner, "PMD in Optical Communication Systems," **Plenary Paper, IEEE Lasers and Electro-Optics Society Summer Topical Meeting on Polarization Mode Dispersion**, Proceedings, Vancouver, Canada, July 14-16 (IEEE, Piscataway, NJ, 2003).

332. Alan Willner and L.-S. Yan, "Performance Degradations and Monitoring in Optical Networks," **Invited Paper**, **Asia-Pacific Optical and Wireless Communications Conference**, paper 5282-39, Wuhan, China, Nov. 2003 (SPIE, Bellingham, WA, 2003)

333. Alan E. Willner, "Physical Layer Impairments and Solutions," **Invited Paper**, **Globecom**, Workshop on Optical Burst Switching, San Francisco, Dec. 2003 (IEEE, Piscataway, NJ, 2003)

334. Alan E. Willner, "Is Circuit Switching So Much Easier Than Packet Switching?," **Invited Paper,** Workshop on Optical Networking: Circuit or Packet Switching? – Where, When and How?, Workshop

INVITED PAPERS AND PRESENTATIONS: (CONTINUED)

PS.We.Workshop1, **Photonics in Switching**, Versailles, France, Oct. 2003 (Optical Society of America, Wash., D.C., 2003).

335. Alan E. Willner, "Do What Optics Does Best," **Invited Paper,** Workshop on Signal Processing Strategies in Optical Networks and the Impact of Advanced Optical/Electrical Components, Workshop PS.We.Workshop4, **Photonics in Switching**, Versailles, France, Oct. 2003 (Optical Society of America, Wash., D.C., 2003).

336. Alan E. Willner, Deniz Gurkan, Asaf B. Sahin, John E. McGeehan, and Michelle C. Hauer, "All-Optical Address Recognition for Optically-Assisted Routing in Next-Generation Optical Networks," **Invited Paper, IEEE COMSOC Communications Magazine**, vol. **41**, no. 5, **Optical Communications Supplement**, vol. **1**, no. 2, pp. S38-S44, May 2003.

337. Alan E. Willner and Lianshan Yan, "PMD Emulation: Requirements and Results," **Invited Paper,** Workshop on PMD: Causes, Effects, and Cures, Workshop W3, **EuropeanConference on Optical Communications (ECOC)**, Rimini, Italy, Sept. 2003.

338. Alan E. Willner, "Predictions for Optical Communications," **Invited Paper**, Part D: Future Prospects in Optoelectronic Systems, **Handbook of Photonics**, Alan Rogers, editor, Institute of Physics Publishing, Bristol, UK, Dec. 2003.

339. Alan E. Willner, Yong-Won Song, John McGeehan, Zhongqi Pan, and Bogdan Hoanca, "Dispersion Management," **Invited Paper, Encyclopedia of Modern Optics**, manuscript 675, Elsevier Publishers, 2004.

340. A.E. Willner, "Overview of System Applications of EIT Technologies," **Invited Paper**, **Slow Light**, DARPA-Sponsored Workshop, Orlando, Florida, Dec. 2003.

341. A.E. Willner, "Combating Channel-Degrading Effects in Multiple-Wavelength Optical Systems," **Invited Presentation, Nerd Lunch Seminar Series,** Cisco Systems, San Jose, July 2003.

342. A.E. Willner, "Troubles Ahead: Which Impairments Will Drive Higher Levels of OPM?" **Invited Presentation,** Workshop on the Need for Optical Performance Monitoring, **Conference on Optical Fiber Communications (OFC)**, Session MC, Atlanta, Georgia, March 2003.

343. A.E. Willner, "Tunable Dispersion Compensation: The Overlap Between What Research Can Provide and What Industry Needs," **Invited Presentation,** Workshop on Tunable Dispersion Compensation, **Conference on Optical Fiber Communications (OFC)**, Session SE, Atlanta, Georgia, March 2003.

344. A.E. Willner, "Trends and Limitations of Optical Network Technologies," **Plenary Paper, 7th Opto-Electronics and Communications Conference (OECC),** Pacifico Yokohama, Kanagawa, Japan, July 9, 2002.

345. A.E. Willner, "Tunability in Dispersion Compensation," **Invited Paper, IEEE Lasers and Electro-Optics Society Annual Meeting**, Proceedings, Glascow, Scotland, Nov. 2002 (IEEE/LEOS, Piscataway, NJ, 2002).

346. A.E. Willner, "All-Optical Packet-Header-Recognition Techniques," **Invited Paper, IEEE Lasers and Electro-Optics Society Annual Meeting**, Proceedings, Glascow, Scotland, Nov. 2002 (IEEE/LEOS, Piscataway, NJ, 2002).

347. John E. McGeehan, Michelle C. Hauer, and Alan E. Willner, "Optical Header Recognition using Fiber Bragg Grating Correlators," **Invited Paper, Newsletter of the IEEE Lasers and Electro-Optics Society**, Special Issue on Fast Optical Signal Processing in Optical Transmission, vol. **16**, no. 5, pp. 29-33, Oct. 2002 (IEEE/LEOS, Piscataway, New Jersey, 2002).

INVITED PAPERS AND PRESENTATIONS: (CONTINUED)

348. A.E. Willner and L.-S. Yan,"Overcoming Dispersive Effects in Optical Networks," **Invited Paper, Asia-Pacific Optical and Wireless Communications Conference (APOC)**, Shanghai, China, Oct. 2002.

349. P. Ebrahimi, Y. Wang, A. B. Sahin, L.-S. Yan, Y. Qian, J. Li, A. E. Willner, "Effects of SBS and Rayleigh Scattering in Densely-Spaced Bidirectional Transmission using Raman Amplification," **Invited Paper, Conference on Lasers and Electro-Optics (CLEO)**, Long Beach, CA, May 2002 (Optical Society of America, Wash., D.C., 2002).

**** Contributed Paper highly ranked by conference committee and upgraded to Invited Paper status. ****

350. Q. Yu, L.-S. Yan, Z. Pan, and A. E. Willner, "Chromatic Dispersion Monitor for WDM Systems using Vestigial-Sideband Optical Filtering," **Invited Paper, Conference on Optical Fiber Communications** (OFC) '02**,** paper WE3, Anaheim, CA, March 2002 (Optical Society of America, Wash., D.C., 2002).

**** Contributed Paper highly ranked by conference committee and upgraded to Invited Paper status.***

351. J. McGeehan, M.C. Hauer, and A.E. Willner, "Digital Optical Correlation for Fiber-Optic Communication Systems," **Invited Paper, Encyclopedia of Telecommunications**, John Proakis, editor, John Wiley and Sons Publishers, New York, 2003.

352. A.E. Willner, "Degrading and Monitoring Issues of Chromatic and Polarization-Mode Dispersion," **Invited Paper, IEEE Lasers and Electro-Optics Society Summer Topical Meeting on Dynamic Enablers of Next-Generation Optical Communications Systems**, Proceedings, paper TuJ1, Quebec City, Canada, July 15-17 (IEEE, Piscataway, NJ, 2002).

353. A.E. Willner, "All-optical Signal Processing for Implementing Network Switching Functions," **Invited Paper, IEEE Lasers and Electro-Optics Society Summer Topical Meeting on Fast Optical Signal Processing in Optical Transmission**, Proceedings, paper TuC1, Quebec City, Canada, July 15-17 (IEEE, Piscataway, NJ, 2002).

354. A.E. Willner, "The Horizon for Optical Communication Systems," **Plenary Paper**, **Corporation for Education Network Initiatives in California (CENIC) Annual Conference 2002**, San Diego, CA, May, 2002.

355. A.E. Willner, "Key Limitations in Multiple-Wavelength Optical Systems and Networks" **Plenary Paper, American Vacuum Society, Third International Conference on Microelectronics and Interfaces,** Santa Clara, CA, February 11, 2002.

356. Alan E. Willner and Zhongji Pan, "Implementing Subcarrier-Based Control in Optical Networking," **Invited Paper, IEEE MTTS International Microwave Symposium**, Special Session on RF Photonic Technologies for Optical Networks, paper 2491, Seattle, Washington, June 2-7, 2002.

357. A.E. Willner, "PMD Emulation," **Invited Paper**, **Instituto Veneto di Scienze Lettere ed Arti**, Special Summer School on Polarization Mode Dispersion, Venice, Italy, June 26, 2002.

358. Alan E. Willner, "Chromatic Dispersion and Polarization-Mode Dispersion: Managing Key Limitations in Optical Communication Systems," **Invited Paper**, **Optics and Photonics News**, OPN Trends, pp. 16-21, March, 2002.

359. A.E. Willner, "Reconfigurable Multiple-Wavelength Optical Systems and Networks," **Invited Presentation**, Seminar Series, Department of Electrical Engineering, **Univ. of California, Berkeley**, Nov. 2001.

INVITED PAPERS AND PRESENTATIONS: (CONTINUED)

360. A.E. Willner, "Reconfigurable Multiple-Wavelength Optical Systems and Networks," **Invited Paper**, Workshop on MEMs and Optical Switching, **American Society of Mechanical Engineers**, Universal City, CA, June 2001.

361. A.E. Willner, "Chromatic Dispersion Compensators: The Search for Tunability," **Invited Paper, Next Generation Networks Conference,** Boston, MA, Nov. 2001.

362. A.E. Willner, "Capacity Limitations in Multiple-Wavelength Optical Systems," **Invited Paper**, **Symposium for the Stanford Photonics Research Center**, Stanford University, Sept. 14, 2001.

363. A.E. Willner, "Reconfigurable Multiple-Wavelength Optical Systems: Things Change," Invited Paper, **Optical Materials for Future Devices and Systems**, DARPA-Sponsored Workshop, Clearwater Beach, Florida, Sept. 2001.

364. A.E. Willner, "Telecom 2001," **Invited Presentation, Gordon Conference on Nonlinear Optics and Lasers**, Colby-Sawyer College, NH, 2001.

365. A.E. Willner and Q. Yu, "Transmission Limitations due to Polarization Mode Dispersion," **Invited Paper, IEEE Lasers and Electro-Optics Society Summer Topical Meeting on Ultralong Haul DWDM Transmission and Networking**, Proceedings, paper MC2.2, Copper Mountain, Colorado (IEEE, Piscataway, NJ, 2001).

366. A.E. Willner, "Polarization Mode Dispersion: Playing Russian Roulette with Your Network," **Invited Paper**, **Lightwave Magazine**, Jan. 2002.

367. D. Gurkan, M.C. Hauer, A.B. Sahin, Z. Pan, A.E. Willner, K.R. Parameswaran, and M.M. Fejer, "Demonstration of Multi-Wavelength All-Optical Header Recognition using a PPLN and Optical Correlators," **Invited Paper, European Conference on Optical Communications**, paper We.B.2.5, Amsterdam, Oct. 2001.

**** Contributed Paper highly ranked by conference committee and upgraded to Invited Paper status. ****

368. A.E. Willner, "Tunable Compensators Master Chromatic-Dispersion Impairments," **Invited Paper**, **WDM Solutions Magazine**, pp. 51-62, July 2001.

369. B. Hoanca, A.E. Willner, R. Khosravani, and S. Lee, "Challenges of Coping with PMD in WDM Optical Systems," **Invited Paper, Society of Photo-Instrumentation Engineers (SPIE), IT Com,** Technical Digest, paper 4532-37, July, 2001, Denver, CO (SPIE, Bellingham, Wash., 2001).

370. A.E. Willner, "Will the Future Look Like the Past?: The Systems Technology View of 40-Gbit/s," **KMI 40-Gbit/s Conference**, Baltimore, MD, July, 2001.

371. A.E. Willner, "Challenges in Next-Generation WDM Systems," **Invited Paper, DARPA Workshop on WDM**, Los Angeles, CA, June 2001.

372. A.E. Willner, "Reconfigurable Multiple-Wavelength Optical Systems and Networks," **Keynote Speaker**, Inauguration of the Center for Optical Communications, Jerusalem College of Technology, June 20, 2001.

373. A.E. Willner, "Will the Future Look Like the Past?," Duke University's **Photonics in the Forest Workshop**, Convocation of the Fitzpatrick Center for Photonics and Communications Systems, April, 2001.

374. A.E. Willner, M.C. Cardakli, O.H. Adamczyk, Y.-W. Song, and D. Gurkan, "Key Building Blocks for All-Optical Networks," **Invited Paper, Institute of Electronics, Information and Communication Engineering) (IEICE) Transactions on Communications**, Special Issue on Advanced Internetworking Based on Photonic Network Technologies, vol. E83-B, no. 10, pp. 2166-2177, 2000.

INVITED PAPERS AND PRESENTATIONS: (CONTINUED)

375. A.E. Willner, "Reconfigurable Multiple-Wavelength Optical Systems and Networks," **Keynote Speaker**, **4th Workshop of IEEE LEOS Benelux, Advanced Optical Networks**, Antwerp, Belgium, May 2000.

376. A.E. Willner and O.A. Adamczyk, "Systems Issues in Wavelength-Multiplexed Optical Interconnections," **Keynote Paper, Society of Photo-Instrumentation Engineers (SPIE) Photonics West, Optoelectronic Interconnects VII,** paper 3952A-55, Jan., 2000, San Jose, CA (SPIE, Bellingham, Wash., 2000).

377. A.E. Willner, "Will the Future Look Like the Past?" **Invited Paper, Conference on Market and Technology Trends of Lightwave Communication Network Systems and Components**, Electronicast, March 5, 2000.

378. A.E. Willner, "Towards Uniform Channel Performance in Dynamic WDM Systems and Networks," **Invited Paper**, **Conference on Optical Fiber Communications** '99, paper ThO5, San Diego, CA, Feb. 1999 (Optical Society of America, Washington D.C., 1999).

379. A.E. Willner, "Reconfigurable WDM Systems and Networks," **Invited Paper**, **NIST WDM-SA'99 Conference**, NIST, Green Auditorium, Gaithersburg, MD, Nov. 3, 1999.

380. A.E. Willner, "Reducing Channel Degradations in WDM Systems and Networks," **Invited Paper, Society of Photo-Instrumentation Engineers (SPIE) Photonics East, Critical Review on Reliability of Optical Fibers and Optical Fiber Systems,** Technical Digest, paper CR73-15, Sept. 1999, Boston, MA (SPIE, Bellingham, Wash., 1999).

381. A.E. Willner, "Key Limitations in WDM Systems and Networks," **Invited Paper, Society of Photo-Instrumentation Engineers (SPIE) Photonics West, Wavelength Division Multiplexing: A Critical Review,** Technical Digest, paper CR71, Jan. 1999, San Francisco, CA (SPIE, Bellingham, Wash., 1999).

382. A.E. Willner and B. Hoanca, "Wavelength-Division Multiplexing for High-Capacity Optical Interconnections," **Invited Paper**, **IEEE Computer Society Workshop on High-Performance Interconnects**, Stanford Univ., CA, Aug. 1999 (IEEE, NJ, 1999).

383. M.I. Hayee, M.C. Cardakli, and A.E. Willner, "Power Unbalanced Polarization-Division-Multiplexing for Efficient Bandwidth Utilization," **Invited Paper**, **Conference on Lasers and Electro-Optics (CLEO)**, paper CTuQ1, Baltimore, Md., May 1999 (Optical Society of America, Wash., D.C., 1999).

**** Contributed Paper highly ranked by conference committee and upgraded to Invited Paper status. ****

384. A.E. Willner, K.-M. Feng, J.-X Cai, and S. Lee, "Tunable Compensation of Channel Degrading Effects using Nonlinearly-Chirped Passive Fiber Gratings," **Invited Paper, IEEE Journal of Selected Topics in Quantum Electronics,** Special Issue on Passive Fiber Optic Components, vol. **5**, no. 5, 1999.

385. A.E. Willner, "Combating Degrading Effects in Reconfigurable WDM Optical Networks," **Invited Paper, 37th Annual Allerton Conference on Communication, Control, and Computing**, Illinois, Sept. 1999.

386. A.E. Willner, "Reconfigurable WDM Systems and Networks," **Distinguished Lecture Series**, Dept. of Electrical Engineering, Univ. of Toronto, Jan. 12, 1999.

387. A.E. Willner, "Critical Issues in Non-Static and Reconfigurable WDM Systems and Networks," **Invited Paper**, **Symposium for the Center for Nonlinear Optical Materials**, Stanford University, Sept. 1999.

388. A.E. Willner, "In Academia, Who's Your Customer?" **Invited Paper,** Workshop on Oprical Communications in Academia, **Conference on Optical Fiber Communications (OFC)**, San Diego, CA, Feb. 1999.

389. Alan Willner, Kai-Ming Feng, and Jin-Xing Cai are with the Dept. of Electrical Engineering, and Victor Grubsky, Dmitri Starodubov, and Jack Feinberg, "Fiber Grating Varies Dispersion Compensation in Real Time," **Invited Paper, Photonics Online**, March 1998.

INVITED PAPERS AND PRESENTATIONS: (CONTINUED)

390. A.E. Willner, "Mining the Optical Bandwidth for a Terabit-per-second," **Invited Paper**, **IEEE Spectrum Magazine**, vol. **34**, no. 4, pp. 32-41, April 1997.

391. A.E. Willner, "Wideband Optical Amplification," **Invited Paper**, **McGraw-Hill 1999 Yearbook of Science and Technology**, McGraw-Hill, New York, pp. 410-413, 1998, ISBN: 0-07-052625-7.

392. A.E. Willner, "Optical Amplifiers," **Invited Paper**, **Wiley Encyclopedia of Electrical and Electronics Engineering**, John G. Webster, ed., John Wiley and Sons, New York, 1999.

393. A.E. Willner, "Applications of All-Optical Wavelength Shifting to Reconfigurable WDM Networks," **Invited Paper, Society of Photo-Instrumentation Engineers (SPIE) Photonics West Critical Review on Wavelength Division Multiplexing,** Technical Digest, paper CR71-13, pp. 220-245, Jan., 1999, San Jose, CA (SPIE, Bellingham, Wash., 1999).

394. A.E. Willner, "Dynamic WDM Optical Systems and Networks," **Invited Paper, NATO Advanced Research Workgroup in Novel Optical Technologies for Communications, Storage, and Computing**, Technical Digest, Oct., 1998, Jerusalem, Israel.

395. A.E. Willner and B. Hoanca, "System Applications of Fiber Optic Passive Components," **Invited Paper**, **Workshop on Fibre Optic Passive Components (WFOPC)**, paper F1, Pavia, Italy, Sept., 1998 (IEEE/LEOS, Piscataway, NJ, 1998).

396. A.E. Willner and K.-M. Feng, "Dynamic WDM Optical Systems and Networks," **Invited Paper**, **International Conference on Applications of Photonic Technologies (ICAPT)**, Technical Digest, Ottawa, Ontario, July, 1998.

397. A.E. Willner, "Dynamic Multiple-Wavelength Systems and Networks," **Invited Paper**, **Society of Photo-Instrumentation Engineers (SPIE) Conference on Optics,** Communications Symposium, Taipei, Taiwan, July 1998.

398. Alan E. Willner, Bogdan Hoanca, and Timothy Day, "Dynamically Reconfigurable WDM Networks Remain a Challenging Goal," **Invited Paper**, **Lightwave Magazine**, June Issue, pp. 54-57, Pennwell Publishers, 1997.

399. A.E. Willner, "Dynamically-Reconfigurable WDM Networks," **Invited Paper**, **Optoelectronics and Communications Conference (OECC) '97**, Seoul, Korea, July 1997.

400. A.E. Willner, "Systems Requirements of WDM Components," **Invited Paper**, **IEEE LEOS Summer Topical Meeting on WDM Components**, Proceedings, WB1, August 1997, Montreal, Canada (IEEE/LEOS, Piscataway, NJ, 1997).

401. A.E. Willner, "High-Capacity Wavelength-Multiplexed Optical Networks," **Invited Paper, Tenth Meeting on Optical Engineering**, Jerusalem, Israel, March 1997.

402. A.E. Willner, "Advanced Multimedia Communication Systems," **Invited Paper**, **World Conference on The Role of Advanced Materials in Sustainable Development, Chemrawn IX**, International Union of Pure and Applied Chemistry, Seoul, Korea, Sept. 1996.

403. A.E. Willner, "Reconfigurable WDM Networks," **Invited Paper, Conf. on Lasers and Electro-Optics (CLEO)**, paper CFG7, Anaheim, CA, June 1996 (Optical Society of America, Wash., D.C., 1996).

404. A.E. Willner, E. Park, D. Norte, and W. Shieh, "Systems Applications of All-Optical Wavelength Shifting," **Invited Paper**, **Meeting of the Optical Society of America**, Rochester, NY, Oct. 1996 (Optical Society of America, Wash., D.C., 1995).

INVITED PAPERS AND PRESENTATIONS: (CONTINUED)

405. A.E. Willner, "Applications of All-Optical Wavelength Shifting to Reconfigurable WDM Networks," **Society of Photo-Instrumentation Engineers (SPIE) Photonics East Conference on Emerging Components and Technologies for All-Optical Photonic Systems,** Technical Digest, Nov. 1996, Boston, MA (SPIE, Bellingham, Wash., 1996).

406. A.E. Willner, "All-Optical Wavelength Shifters: Where Could/Should They be Used?," **Invited Paper,IEEE LEOS Semiconductor Laser Workshop**, Session on Nonlinear Functional Applications of Lasers and Amplifiers, Anaheim, CA, June 1996.

407. A.E. Willner, "Overview of Systems Issues for WDM Components," **Invited Paper, Society of Photo-Instrumentation Engineers (SPIE) Photonics West Conference on Wavelength Division Multiplexing Components**, Technical Digest, paper 2690-03, Jan. 1996, San Jose, CA (SPIE, Bellingham, Wash., 1996).

408. A.E. Willner, S.H. Huang, X.Y. Zou, S.-M. Hwang, D.A. Smith, and Z. Bao, "Dynamic Channel Power Equalization in Reconfigurable WDM Networks," **Invited Paper, IEEE Lasers and Electro-Optics Society Annual Meeting**, Proceedings, Nov. 1996, Boston, MA (IEEE/LEOS, Piscataway, NJ, 1996).

409. A.E. Willner and D.A. Smith, "Dynamic Channel-Power Equalization Improves Transmission Distances for Wavelength-Division Multiplexed Networks," **Invited Paper, Laser Focus World Magazine**, June Issue, 1996.

410. A.E. Willner, "Future Strategic Directions in Optical Science and Engineering," **Plenary Paper**, **NSF-Sponsored Forum on Optical Science and Engineering**, co-located with Society of Photo-Instrumentation Engineers (SPIE) Conference, San Diego, CA, July 1995 (SPIE, Bellingham, Wash., 1995).

411. A.E. Willner, "High-Capacity Multiwavelength Optical Fiber Communication Systems," **Invited Paper**, **NSF-Sponsored Forum on Optical Science and Engineering**, co-located with Society of Photo-Instrumentation Engineers (SPIE) Conference, Proceedings, paper 2524-05, pp. 48-72, San Diego, CA, July, 1995 (SPIE, Bellingham, Wash., 1995).

412. A.E. Willner, D. Norte, and E. Park, "All-Optical Wavelength Shifting and Data-Packet Manipulation in a Reconfigurable WDM Network", **Invited Paper, IEEE Lasers and Electro-Optics Society Annual Meeting**, Proceedings, paper ONS4.1, Nov. 1995, San Francisco, CA (IEEE/LEOS, Piscataway, NJ, 1995).

413. J.E. Leight, S. Homan, A.E. Willner, G. Giaretta, M. Li, and C.J. Chang-Hasnain, "Demonstration of a Reconfigurable Wavelength-Multiplexed Multiple-Plane Optical Interconnection," **Invited Paper**, **Newsletter of the International Technical Working Group on Optical Processing and Computing**, **Society of Photo-Instrumentation Engineers (SPIE)**, D. Psaltis, B. Javidi, J. Neff, and S. Bains, eds., vol. **6**, no. 2, pp. 4-5, Oct. 1995 (SPIE, Bellingham, Wash., 1995).

414. A.E. Willner and J.E. Leight, "Multiple-Plane Two-Dimensional WDM Interconnections using VCSELs for Reconfigurable Communication with Los Switching Delay," **Invited Paper, Society of Photo-Instrumentation Engineers (SPIE) Photonics West Conference on Components for Wavelength Division Multiplexing**, Technical Digest, paper 2402-06, Feb., 1995, San Jose, CA (SPIE, Bellingham, Wash., 1995).

415. A.E. Willner, "Transmission of Many WDM Channels in EDFA Cascades and Ring Networks," **Invited Paper**, **International Conference on Emerging Optoelectronic Technologies** (CEOT), sponsored by the **Society of Photo-Instrumentation Engineers (SPIE),** pp. 137-141, Bangalore, India, July 19-22, 1994 (SPIE, Bellingham, Wash., 1994).

INVITED PAPERS AND PRESENTATIONS: (CONTINUED)

416. A.E. Willner, "Transmission of Many WDM Channels Through a Cascade of EDFA's in Long-Distance Link and Ring Networks," **Invited Paper, Newsletter of the IEEE Lasers and Electro-Optics Society**, vol. **8**, no. 4, August 1994 (IEEE/LEOS, Piscataway, New Jersey, 1994).

417. V.O.K. Li, A.E. Willner, P.D. Dapkus, K.-C. Lee, A.D. Norte, E. Park, W. Shieh, and A. Mathur, "Wavelength Converting and Wavelength Routing for High-Efficiency Almost-All-Optical Networks," **Invited Paper**, **Journal of High Speed Networks**, Special Issue on Optical Networks, vol. **4**, pp. 5-25, 1995 (IOS Press).

418. A.E. Willner, "Multi-Channel Optical Communication Systems," **Invited Paper**, **Conference on Defining the Global Information Infrastructure: Systems and Services (Critical Review)**, Society of Photo-Instrumentation Engineers (SPIE), Proceedings, paper CR56-03, Boston, MA, Nov. 1994.

419. A.E. Willner, "2-D Multiple-Plane Wavelength-Multiplexed Optical Interconnections," **Invited Paper**, **Conference on Manufacturing Process Development in Photonics**, Session 6, paper 2, Redstone Arsenal, Alabama, Nov. 1994.

420. A.E. Willner, "Routing and Amplification in WDM Systems: Performance vs. Complexity," **Invited Paper,** Workshop on WDM Technologies, **Conference on Optical Fiber Communications (OFC)**, San Jose, CA, Feb. 1994.

421. A.E. Willner, "2-D Multiple-Plane Optical Communication using WDM and Guided-Wave Technologies," **Invited Paper, IEEE Lasers and Electro-Optics Society Annual Meeting**, Proceedings, paper OC8.2, Nov. 1993, San Jose, CA (IEEE/LEOS, Piscataway, NJ, 1993).

422. A.E. Willner, "Routing and Amplification in WDM Systems: Performance vs. Complexity," **Invited Paper**, **Conference on Optical Fiber Communication**, Special Workshop on WDM Systems, San Jose, CA, Feb. 1994 (Optical Society of America, Wash., D.C., 1994).

423. A.E. Willner, "Systems Applications of WDM," **Invited Paper**, **Meeting of the Optical Society of America**, Proceedings, paper MFF3, Oct. 1993, Toronto, Canada (Optical Society of America, Wash., D.C., 1993).

424. A.E. Willner, "SNR Analysis of Crosstalk and Filtering Effects in an Amplified Multi-Channel Direct-Detection Dense-WDM System," **Invited Paper**, **Selected Papers on Fiber Optic Communications**, L.D. Hutcheson and S.C. Mettler, eds., Milestone Series, vol. MS 88, pp. 287-290, Society of Photo-Instrumentation Engineers (SPIE) Press (SPIE, Bellingham, Wash., 1993).

425. A.E. Willner, "2-D WDM Optical Interconnections for Simultaneous and Reconfigurable Communication Among Many Planes," **Invited Paper, Newsletter of the IEEE Lasers and Electro-Optics Society**, vol. **7**, no. 2, pp. 4-6, April 1993 (IEEE/LEOS, Piscataway, New Jersey, 1993).

426. A.E. Willner, "Approaches to Switching and Amplification in WDM Systems," **Invited Paper, IEEE Lasers and Electro-Optics Society Annual Meeting**, Technical Digest, pp. 82-84, Boston, MA, Nov. 1992 (IEEE/LEOS, Piscataway, New Jersey, 1992).

427. A.E. Willner, "Implementing EDFA's in Multi-User Distribution Systems," **Invited Paper**, **Meeting of the Optical Society of America**, paper ThW2, Albuquerque, NM, Sept. 1992 (Optical Society of America, Wash., D.C., 1992).

428. A.E. Willner, "WDM Amplification and Switching," **Invited Paper, Society of Photo-Instrumentation Engineers (SPIE) Conference on Multigigabit Fiber Communications**, Technical Digest, paper 1787-01, pp. 2-19, Sept. 1992, Boston, MA (SPIE, Bellingham, Wash., 1992).

INVITED PAPERS AND PRESENTATIONS: (CONTINUED)

429. A.E. Willner, "FSK Distribution Systems with Optical Preamplifiers," **Invited Paper**, **Meeting of the Optical Society of America**, Technical Digest, pp. 8-9, San Jose, CA, Nov. 1991 (Optical Society of America, Wash., D.C., 1991).

430. A.E. Willner and D.V. Podlesnik, Laser Direct Writing of Integrated Optical Components," **InvitedPaper**, **Topical Meeting on Integrated and Guided Wave Optics**, Technical Digest, paper MDD1, pp. 64-67, Feb. 1989 (Optical Society of America, Wash., D.C., 1989).

431. A.E. Willner, "Laser-Controlled Processing of Semiconductors for Device Fabrication," Invited Lecture, Semiconductor Research Corp. **Fellows Recognition Seminar**, Technical Digest, Research Triangle Park, N. Carolina, Oct. 1987.

432. D.V. Podlesnik, A.E. Willner, H.H. Gilgen, and R.M. Osgood, Jr., "Light Guided Microfabrication of Semiconductors in Aqueous Solutions," **Invited Paper**, **Electrochemical Society Meeting**, Technical Digest, Las Vegas, NV, Oct. 1985.

433. A.E. Willner, D.V. Podlesnik, R.R. Krchnavek, H.H. Gilgen, P.D. Brewer, and R.M. Osgood, Jr., "Laser-Induced Microfabrication," **Invited Paper,** NATO Advanced Study Institute, **Conf. on Solid State Devices in Communications**, Proceedings, Sicily, Italy, July 1985 (NATO, Wash., D.C., 1985).

REFEREED CONFERENCE PROCEEDINGS:

1. Muralekrishnan Ramakrishnan, Xinzhou Su, Zile Jiang, Huibin Zhou, Abdulrahman Alhaddad, Amir Minoofar, Moshe Tur, Andreas Molisch, and Alan E. Willner, "Experimental Demonstration of Physical Layer Security in a 20-Gbit/s QPSK THz Wireless Link Using a Longitudinally Structured Noise Beam," **APS/IEEE/Optica Conference on Lasers and Electro-Optics (CLEO)**, accepted for publication, Long Beach, CA, May 2025 (Optica, DC, 2025).

2. Abdulrahman Alhaddad, Wing Ko, Amir Minoofar, Hongkun Lian, Muralekrishnan Ramakrishnan, Huibin Zhou, Zile Jiang, Xinzhou Su, Narek Karapetyan, Yingning Wang, Ruoyu Zeng, Ahmed Almaiman, Moshe Tur, Jonathan Habif, and Alan E. Willner, "Experimental Demonstration of Optical Pattern Recognition Between Independent QPSK Channels Using Wave Mixing," **APS/IEEE/Optica Conference on Lasers and Electro-Optics (CLEO)**, accepted for publication, Long Beach, CA, May 2025 (Optica, DC, 2025).

3. Yue Zuo, Huibin Zhou, Xinzhou Su, Wing Ko, Muralekrishnan Ramakrishnan, Yingning Wang, Ruoyu Zeng, Yuxiang Duan, Zile Jiang, Moshe Tur, and Alan E. Willner, "Experimental Demonstration of 2-Gbit/s 2-Channel Mid-Infrared Mode-Division Multiplexing Using a Single Wavelength Converter," **APS/IEEE/Optica Conference on Lasers and Electro-Optics (CLEO)**, accepted for publication, Long Beach, CA, May 2025 (Optica, DC, 2025).

4. Amir Minoofar, Abdulrahman Alhaddad, Wing Ko, Hongkun Lian, Huibin Zhou, Muralekrishnan Ramakrishnan, Narek Karapetyan, Ahmed Almaiman, Murali Annavaram, Moshe Tur, Jonathan Habif, and Alan E. Willner, "Reconfigurable Optical Recognition of 2 Independent Data Patterns Using Wavelength Multiplexing and Nonlinear Wave Mixing," **APS/IEEE/Optica Conference on Lasers and Electro-Optics (CLEO)**, accepted for publication, Long Beach, CA, May 2025 (Optica, DC, 2025).

5. Zixun Zhao, Huibin Zhou, Xinzhou Su, Hongkun Lian, Heng Wu, Zile Jiang, Yue Zuo, Yuxiang Duan, Yingning Wang, Ruoyu Zeng, Moshe Tur, and Alan E. Willner, "Utilizing Machine Learning to Estimate Turbulence Strength Distribution Along a Path by Transmitting Single and bi-Direction Diverging Gaussian

REFEREED CONFERENCE PROCEEDINGS: (CONTINUED)

Beams," **APS/IEEE/Optica Conference on Lasers and Electro-Optics (CLEO)**, accepted for publication, Long Beach, CA, May 2025 (Optica, DC, 2025).

6. Yuxiang Duan, Zixun Zhao, Heng Wu, Huibin Zhou, Zile Jiang, Andrew Bergey, Yingning Wang, Ruoyu Zeng, Yue Zuo, Wing Ko, Muralekrishnan Ramakrishnan, Luke Rumbaugh, Robert Bock, Moshe Tur, and Alan E. Willner, "Experimental Demonstration of Using Structured Light to Increase the Accuracy of Time-of-Flight Underwater Ranging in Single-Shot Measurements," **APS/IEEE/Optica Conference on Lasers and Electro-Optics (CLEO)**, accepted for publication, Long Beach, CA, May 2025 (Optica, DC, 2025).

7. Huibin Zhou, Yue Zuo, Abdulrahman Alhaddad, Xinzhou Su, Wing Ko, Moshe Tur, and Alan E. Willner, "Demonstration of 1.024-Tbit/s 16-Channel Mid-IR Free-Space Optical Communications by Combining Wavelength, Polarization, and Mode Multiplexing," **IEEE/Optica Conference on Optical Fiber Communications (OFC)**, ***Postdeadline Paper***, paper **Th4A.6.**, San Francisco, CA, Mar. 2025 (Optica, Washington, D.C., 2025).

8. Huibin Zhou, Yue Zuo, Abdulrahman Alhaddad, Xinzhou Su, Yuxiang Duan, Adam Heiniger, Moshe Tur, and Alan E. Willner, "Experimental Demonstration of Coherent Heterodyne Detection for Multiple Mid-IR Free-Space Optical (FSO) Data Channels with a Native Mid-IR Detector," **IEEE/Optica Conference on Optical Fiber Communications (OFC)**, paper **M4G.8**, San Francisco, CA, Mar. 2025 (Optica, Washington, D.C., 2025).

   **** Selected by the subcommittee as a "Top-Scored Paper" (~5% of the submissions). ****

9. Xinzhou Su, Chun-ho Lee, Xinyi Ren, Zile Jiang, Huibin Zhou, Yue Zuo, Shaoyuan Ou, Reshma Kopparapu, Yue Yu, Adam Heiniger, Moshe Tur, Zaijun Chen, Mengjie Yu, and Alan E. Willner, "Demonstration of Mid-Wavelength Infrared IM/DD Communications Using Air-Suspended Thin-Film Lithium Niobate Intensity Modulator," **IEEE/Optica Conference on Optical Fiber Communications (OFC)**, paper **Th3J.1**, San Francisco, CA, Mar. 2025 (Optica, Washington, D.C., 2025).

   **** Selected by the subcommittee as a "Top-Scored Paper" (~5% of the submissions). ****

10. Yuxiang Duan, Yingning Wang, Huibin Zhou, Zile Jiang, Muralekrishnan Ramakrishnan, Zixun Zhao, Ruoyu Zeng, Yue Zuo, Hongkun Lian, Xinzhou Su, Robert Bock, Moshe Tur, and Alan E. Willner, "Demonstration of Combined Coarse and Fine Underwater Ranging Using Structured Light of Varying Longitudinal Wavenumbers for Enhanced Dynamic Range and Accuracy," **IEEE/Optica Conference on Optical Fiber Communications (OFC)**, paper **M2J.6**, San Francisco, CA, Mar. 2025 (Optica, Washington, D.C., 2025).

11. Wing Ko, Abdulrahman Alhaddad, Amir Minoofar, Hongkun Lian, Huibin Zhou, Muralekrishnan Ramakrishnan, Zile Jiang, Xinzhou Su, Moshe Tur, jonathan habif, and Alan E. Willner, "Demonstration of Tunable and Reconfigurable All-Optical Matrix-Vector Multiplication Using Nonlinear Wave Mixing," **IEEE/Optica Conference on Optical Fiber Communications (OFC)**, paper **W4D.3**, San Francisco, CA, Mar. 2025 (Optica, Washington, D.C., 2025).

12. Ruoyu Zeng, Yingning Wang, Abdulrahman Alhaddad, Huibin Zhou, Hongkun Lian, Yuxiang Duan, Muralekrishnan Ramakrishnan, Zile Jiang, Yue Zuo, Wing Ko, Xinzhou Su, Mo Mojahedi, Moshe Tur, and Alan E. Willner, "Demonstration of Distance-Dependent Data Channel Recovery in a 40-Gbit/s QPSK 2-Channel Mode-Multiplexed FSO Link by Varying the Longitudinal Wavenumbers of Structured Light," **IEEE/Optica Conference on Optical Fiber Communications (OFC)**, paper **FM3C. 5**, San Francisco, CA, Mar. 2025 (Optica, Washington, D.C., 2025).

13. Zile Jiang, Xinzhou Su, Huibin Zhou, Yue Zuo, Yuxiang Duan, Muralekrishnan Ramakrishnan, Abdulrahman Alhaddad, Hongkun Lian, Yingning Wang, Ruoyu Zeng, Zixun Zhao, Jan Tepper, Francesco

REFEREED CONFERENCE PROCEEDINGS: (CONTINUED)

Nardo, Moshe Tur, and Alan E. Willner, " Experimental Demonstration of a Narrow and Low-Divergence "Pin-Like" Beam in a 2-Gbit/s OOK FSO Link under Turbulence Effects when Using a Limited-Size Receiver Aperture," **European Conference on Optical Communication (ECOC) 2024**, paper **Th2D.5**, Frankfurt, Germany, Sep. 2024.

14. Wing Ko, Abdulrahman Alhaddad, Amir Minoofar, Narek Karapetyan, Huibin Zhou, Muralekrishnan Ramakrishnan, Zile Jiang, Xinzhou Su, Moshe Tur, Jonathan Habif, and Alan E. Willner, "Tunable and Reconfigurable 10-Gbaud Optical Data Format Aggregation of Two Independent Channels with Constellation Biasing by using Nonlinear Wave Mixing," **Frontiers in Optics (FiO) 2024,** paper **FM3C. 5**, Denver, Colorado, Sep. 2024.

15. Yingning Wang, Yuxiang Duan, Ruoyu Zeng, Huibin Zhou, Zile Jiang, Yue Zuo, Muralekrishnan Ramakrishnan, Robert Bock, Mo Mojahedi, Moshe Tur, and Alan E. Willner, "Attenuation Resilient Underwater Ranging Using Petal-Like Structured Light with Tailorable Longitudinal Intensity," **Frontiers in Optics (FiO) 2024,** paper **JTu5A.69**, Denver, Colorado, Sep. 2024.

16. Amir Minoofar, Abdulrahman Alhaddad, Wing Ko, Hongkun Lian, Huibin Zhou, Narek Karapetyan, Muralekrishnan Ramakrishnan, Zile Jiang, Ahmed Almaiman, Murali Annavaram, Moshe Tur, Jonathan Habif, and Alan E. Willner, "Reconfigurable Optical Recognition of 3 Independent Data Patterns Using Intra-Symbol Time Multiplexing and Nonlinear Wave Mixing," **Frontiers in Optics (FiO) 2024, *Postdeadline Paper***, paper **JTu7A.4**, Denver, Colorado, Sep. 2024.

17. Yingning Wang, Xinzhou Su, Ruoyu Zeng, Zile Jiang, Huibin Zhou, Abdulrahman Alhaddad, Wing Ko, Yuxiang Duan, Muralekrishnan Ramakrishnan, Yue Zuo, Moshe Tur, and Alan E. Willner, "Experimental Demonstration of Longitudinally Tailored Dynamic Motion of a Spatiotemporal Wave Packet," **APS/IEEE/Optica Conference on Lasers and Electro-Optics (CLEO)**, paper **SW4A.2**, North Carolina, Charlotte, May 2024 (Optica, DC, 2024).

18. Xinzhou Su, Huibin Zhou, Zile Jiang, Abdulrahman Alhaddad, Muralekrishnan Ramakrishnan, Moshe Tur, Andreas Molisch, and Alan E. Willner, "Enhancement of Physical Layer Security in FSO Links by Longitudinally Tailoring the Noise Power to Overwhelm the Signal Power," **APS/IEEE/Optica Conference on Lasers and Electro-Optics (CLEO)**, paper **SW3N.4**, North Carolina, Charlotte, May 2024 (Optica, DC, 2024).

19. Abdulrahman Alhaddad, Amir Minoofar, Wing Ko, Huibin Zhou, Narek Karapetyan, Muralekrishnan Ramakrishnan, Yuxiang Duan, Zile Jiang, Xinzhou Su, Yingning Wang, Ruoyu Zeng,Hao Song, Ahmed Almaiman, Jonathan Habif, Moshe Tur, and Alan E. Willner, "Experimental Demonstration of Directly Detecting the Output of a Tunable 2-Symbol 10-GBaud QPSK Optical Correlator Using Optical Biasing and Nonlinear Wave Mixing," **APS/IEEE/Optica Conference on Lasers and Electro-Optics (CLEO)**, paper **STu3P.1**, North Carolina, Charlotte, May 2024 (Optica, DC, 2024).

20. Amir Minoofar, Abdulrahman Alhaddad, Wing Ko, Huibin Zhou, Narek Karapetyan, Zile Jiang, Ahmed Almaiman, Muralekrishnan Ramakrishnan, Murali Annavaram, Jonathan Habif, Moshe Tur, and Alan E. Willner, "Demonstration of Tunable Optical Matrix Convolution of a 10-Gbaud QPSK 2-D Image with a Kernel Using Wave Mixing," **APS/IEEE/Optica Conference on Lasers and Electro-Optics (CLEO)**, paper **STu3P.2**, North Carolina, Charlotte, May 2024 (Optica, DC, 2024).

21. Muralekrishnan Ramakrishnan, Huibin Zhou, Zile Jiang, Xinzhou Su, Yuxiang Duan, Abdulrahman Alhaddad, Moshe Tur, and Alan E. Willner, "Demonstration of Mitigation of Both Turbulence and Misalignment in a 50-Gbit/s/channel Free-Space Mode-Division-Multiplexed Optical Link Using Complex Beamforming," **APS/IEEE/Optica Conference on Lasers and Electro-Optics (CLEO)**, paper **SF1L.5**, North Carolina, Charlotte, May 2024 (Optica, DC, 2024).

REFEREED CONFERENCE PROCEEDINGS: (CONTINUED)

22. Narek Karapetyan, Amir Minoofar, Abdulrahman Alhaddad, Wing Ko, Huibin Zhou, Muralekrishnan Ramakrishnan, Moshe Tur, Jonathan Habif, and Alan E. Willner, "Experimental Demonstration of Optical Transcoding of 5-Gbit/s OOK Data Signal by Recovering One of The Two Channels of 10-Gbit/s QPSK Data Signal Using Wave-Mixing," **APS/IEEE/Optica Conference on Lasers and Electro-Optics (CLEO)**, paper **STh1C.8**, North Carolina, Charlotte, May 2024 (Optica, DC, 2024).

23. Ruoyu Zeng, Xinzhou Su, Yingning Wang, Zile Jiang, Hongkun Lian, Huibin Zhou, Wing Ko, Muralekrishnan Ramakrishnan, Abdulrahman Alhaddad, Moshe Tur, Demetrios Christodoulides, and Alan E. Willner, "Representation of Spatiotemporal Wave Packets Having Dynamic Motion on a Modified Poincaré Sphere," **APS/IEEE/Optica Conference on Lasers and Electro-Optics (CLEO)**, paper **SW4A.5**, North Carolina, Charlotte, May 2024 (Optica, DC, 2024).

24. Yuxiang Duan, Huibin Zhou, Zile Jiang, Muralekrishnan Ramakrishnan, Xinzhou Su, Wing Ko, Yue Zuo, Hongkun Lian, Zixun Zhao, Ruoyu Zeng, Yingning Wang, Moshe Tur, and Alan E. Willner, "Experimental Demonstration of an 8-Gbit/s QPSK Coherent Underwater Wireless Optical Communication Link Under Scattering Conditions," **IEEE/Optica Conference on Optical Fiber Communications (OFC)**, Paper **W4B.4**, San Diego, CA, Mar. 2024 (Optica, Washington, D.C., 2024).

25. Zile Jiang, Muralekrishnan Ramakrishnan, Huibin Zhou, Xinzhou Su, Yuxiang Duan, Hao Song, Ruoyu Zeng, Yingning Wang, Robert Bock, Moshe Tur, and Alan E. Willner, "Experimental Demonstration of Underwater Optical Ranging with Enhanced Accuracy Under Scattering Conditions Using Multiple Bessel Modes," **IEEE/Optica Conference on Optical Fiber Communications (OFC)**, Paper **W4B.6**, San Diego, CA, Mar. 2024 (Optica, Washington, D.C., 2024).

26. Vignesh Gopal, Xinzhou Su, Asher Novick, Hao Song, Zile Jiang, Muralekrishnan Ramakrishnan, James Venditto, Anthony Rizzo, Xiang Meng, Ricard Menchon-Enrich, Alan E. Willner, and Keren Bergman, "Reconfigurable Silicon Photonic Transmitter for Space Based Communications Nodes," **IEEE/Optica Conference on Optical Fiber Communications (OFC)**, Paper **W4G.5**, San Diego, CA, Mar. 2024 (Optica, Washington, D.C., 2024).

27. Huibin Zhou, Yuxiang Duan, Murale Ramakrishnan, Zile Jiang, Xinzhou Su, Kaiheng Zou, Adam T. Heiniger, Moshe Tur, and Alan E. Willner, "Demonstration of a 10-Gbit/s QPSK Mid-IR Free-space Coherent Link through Fog Using an Optical Parametric Oscillator (OPO)-based High-Power Data Transmitter," **European Conference on Optical Communications (ECOC), *Postdeadline Paper***, paper **Th.C.3.1**, Glasgow, Scotland, Oct. 2023.

28. Xinzhou Su, Kaiheng Zou, Yingning Wang, Huibin Zhou, Hao Song, Wing Ko, Ruoyu Zeng, Abdulrahman Alhaddad, Murale Ramakrishnan, Yuxiang Duan, Moshe Tur, Demetrios Christodoulides, and Alan E. Willner, "Demonstration of Space-Time Wave Packets in Optical Fibers with Dynamic Motion and Tunable Group Velocity," **Frontiers in Optics (FiO) 2023, *Postdeadline Paper***, paper **JTu7B.1**, Tacoma, Washington, Oct. 2023.

29. Xinzhou Su, Kaiheng Zou, Huibin Zhou, Hao Song, Yuxiang Duan, Maxim Karpov, Tobias Kippenberg, Moshe Tur, Demetrios Christodoulides, and Alan Willner, "Experimental Demonstration of Tunable Space-Time Wave Packets Carrying Time- and Longitudinal-Varying OAM," **APS/IEEE/Optica Conference on Lasers and Electro-Optics (CLEO)**, paper **SF1R.1**, San Jose, CA, May 2023 (Optica, DC, 2023).

30. Yuxiang Duan, Hao Song, Huibin Zhou, Zile Jiang, Kaiheng Zou, Xinzhou Su, Robert Bock, Moshe Tur, and Alan E. Willner, "Accurate Underwater Optical Ranging Through a Scattering Medium Using Tunable Structured Light Carrying Two Modes for Combining Coarse and Fine Approaches," **APS/IEEE/Optica Conference on Lasers and Electro-Optics (CLEO)**, paper **JTu2A.68**, San Jose, CA, May 2023 (Optica, DC, 2023).

REFEREED CONFERENCE PROCEEDINGS: (CONTINUED)

31. Hao Song, Huibin Zhou, Yuxiang Duan, Zile Jiang, Murale Ramakrishnan, Wing Ko, Yingning Wang, Xinzhou Su, Kaiheng Zou, Abdulrahman Alhaddad, Ruoyu Zeng, Robert Bock, Moshe Tur, and Alan E. Willner, "Experimental Demonstration of 0.4-meter Ranging Through Underwater Scattering with 20-mm Resolution Using z-dependent Angular Rotation of a Spatially Structured Beam," **IEEE/Optica Conference on Optical Fiber Communications (OFC)**, paper **M3F.4**, Mar. 2023 (Optica, Washington, D.C., 2023).

32. Huibin Zhou, Hao Song, Xinzhou Su, Yuxiang Duan, Kaiheng Zou, Runzhou Zhang, Moshe Tur, and Alan E. Willner, "Demonstration of "Automatic" Turbulence Mitigation of 4 QPSK Channels in a Self-Coherent Free-Space Mode-Division-Multiplexed Link Using a Pilot Beam and Photodetector Array," **IEEE/Optica Conference on Optical Fiber Communications (OFC)**, paper **Th3H.1**, Mar. 2023 (Optica, Washington, D.C., 2023).

33. Amir Minoofar, Hao Song, Ahmed Almaiman, Narek Karapetyan, Wing Ko, Kaiheng Zou, Huibin Zhou, Muralekrishnan Ramakrishnan, Murali Annavaram, Jonathan Habif, Moshe Tur, and Alan E. Willner, "Experimental Demonstration of Reconfigurable "Digital Average" of Two 20-Gbaud Phase-Encoded Data Channels Using Nonlinear Optical Wave Mixing," **IEEE/Optica Conference on Optical Fiber Communications (OFC)**, paper **W2A.32**, Mar. 2023 (Optica, Washington, D.C., 2023).

34. Huibin Zhou, Runzhou Zhang, Xinzhou Su, Yuxiang Duan, Haoqian Song, Hao Song, Kaiheng Zou, Robert W. Boyd, Moshe Tur, and Alan E. Willner, "Demonstration of Turbulence-Resilient Self-Homodyne 12-Gbit/s 16-QAM Free-Space Optical Communications using a Transmitted Pilot Tone," **in European Conference on Optical Communication (ECOC) 2022**, paper **Tu4F.4**, 2022.
    **** Paper selected by the subcommittee as a " Highly Scored Paper" (~5% of the submissions). ****

35. Hao Song, Kaiheng Zou, Narek Karapetyan, Amir Minoofar, Huibin Zhou, Xinzhou Su, Ahmed Almaiman, Jonathan L. Habif, Moshe Tur, and Alan E. Willner, "Experimental Demonstration of an Optical Half-Adder of Two 4-PSK, 10-Gbit/s Channels using Nonlinear Wave Mixing," **IEEE Photonics Conference (IPC) 2022**, paper **TuF1.5**, Nov. 2022 (IEEE, Piscataway, NJ, 2022).

36. Minsik Kim, Alan E. Willner, and Daeyoung Park, "Turbulence Resilient Free-Space Optical Communication Using Iterative Blind Equalization," **International Technical Conference on Circuits/Systems, Computers and Communications (ITC-CSCC) 2022**, pp. 664-666, 2022.
    **** Paper selected by the subcommittee as the awardee of the ITC-CSCC 2022 Best Paper Awards. ****

37. Samer Idres, Ahmad Fallahpour, Alan E. Willner, Jonathan Habif, and Hossein Hashemi, "Integrated All-Optical Controlled Amplitude Modulator Using Laser Delivered Signals," **APS/IEEE/Optica Conference on Lasers and Electro-Optics (CLEO)**, paper **JTh3A.48**, May 2022 (Optica, Washington, D.C., 2022).

38. Huibin Zhou, Xinzhou Su, Yuxiang Duan, Nanzhe Hu, Hao Song, Runzhou Zhang, Haoqian Song, Kaiheng Zou, Kai Pang, Moshe Tur, Alan E. Willner, "Experimental Probing of Atmospheric Turbulence Along the Propagation Direction Using a Single Transmitter Aperture and Multiple Pairs of Longitudinally Structured Beams," **APS/IEEE/Optica Conference on Lasers and Electro-Optics (CLEO)**, paper **STh4J. 5**, May 2022 (Optica, Washington, D.C., 2022).

39. Hao Song, Huibin Zhou, Kaiheng Zou, Runzhou Zhang, Xinzhou Su, Kai Pang, Haoqian Song, Yuxiang Duan, Amir Minoofar, Robert Bock, Shlomo Zach, Moshe Tur, Alan E. Willner, "Experimental Demonstration of Generating A 10-Gbit/s QPSK Laguerre-Gaussian Beam Using Integrated Circular Antenna Arrays to Tune Both Spatial Indices," **APS/IEEE/Optica Conference on Lasers and Electro-Optics (CLEO)**, paper **SM2N. 2**, May 2022 (Optica, Washington, D.C., 2022).

40. Haoqian Song, Yuxiang Duan, Huibin Zhou, Runzhou Zhang, Hao Song, Xinzhou Su, Cristian Acevedo, Mahdi Eshaghi, Kaiheng Zou, Kai Pang, Moshe Tur, Aristide Dogariu, Richard J. Watkins, Alan E. Willner, "Experimental Investigation for the Causes of Orbital-Angular-Momentum Modal Coupling Through a

REFEREED CONFERENCE PROCEEDINGS: (CONTINUED)

Dynamic Random Turbulent Medium," **APS/IEEE/Optica Conference on Lasers and Electro-Optics (CLEO)**, paper **FF3D. 7**, May 2022 (Optica, Washington, D.C., 2022).

41. Xinzhou Su, Runzhou Zhang, Huibin Zhou, Hao Song, Kaiheng Zou, Haoqian Song, Yuxiang Duan, Kai Pang, Nanzhe Hu, Yiyu Zhou, Robert W. Boyd, Moshe Tur, Alan E. Willner, "Experimental Demonstration of Enhanced Misalignment Tolerance for Recovering Phase and Amplitude Encoding in a Pilot-Assisted Self-Coherent Free-Space Optical Link," **APS/IEEE/Optica Conference on Lasers and Electro-Optics (CLEO)**, paper **STh2M. 2**, May 2022 (Optica, Washington, D.C., 2022).

42. K.Y. Yang, A.D. White, F. Ashtiani, C. Shirpurkar, S.V. Pericherla, L. Chang, H. Song, K. Zou, H. Zhou, K. Pang, J. Yang, M.A. Guidry, D.M. Lukin, H. Hao, L. Trask, G.H. Ahn, A. Netherton, T.C. Briles, J.R. Stone, L. Rechtman, J.S. Stone, K. Van Gasse, J.L. Skarda, L. Su, D. Vercruysse, J.P.W. MacLean, S. Aghaeimeibodi, M.-J. Li, D.A.B. Miller, D.M. Marom, S.B. Papp, A.E. Willner, J.E. Bowers, P.J. Delfyett, F. Aflatouni, J. Vučković, "Inverse-Designed Multi-Wavelength, Multi-Mode Optical Interconnects using Soliton Microcombs," **APS/IEEE/Optica Conference on Lasers and Electro-Optics (CLEO)**, paper **STh4F. 2**, May 2022 (Optica, Washington, D.C., 2022).

43. Kaiheng Zou, Kai Pang, Hao Song, Maxim Karpov, Xinzhou Su, Runzhou Zhang, Haoqian Song, Huibin Zhou, Tobias J. Kippenberg, Moshe Tur, Alan E. Willner, "Generating a Space-Time Pulse in Free Space After Multimode Fiber Propagation in Which Fiber Modal Coupling is Mitigated, Divergence is Reduced, and Group Velocity is Tuned," **APS/IEEE/Optica Conference on Lasers and Electro-Optics (CLEO)**, paper **STh5E. 1**, May 2022 (Optica, Washington, D.C., 2022).

44. Runzhou Zhang, Kaiheng Zou, Xinzhou Su, Yuxiang Duan, Huibin Zhou, Haoqian Song, Hao Song, Amir Minoofar, Nanzhe Hu, Kai Pang, Robert W. Boyd, Moshe Tur, Alan E. Willner, "Turbulence-Resilient 2.25-Gbit/s DPSK Self-Coherent Free-Space Optical Communication Link Using Automatic Optoelectronic Mixing of Many Spatial Modes," **APS/IEEE/Optica Conference on Lasers and Electro-Optics (CLEO)**, paper **STh2M. 4**, May 2022 (Optica, Washington, D.C., 2022).

45. Xinzhou Su, Hao Song, Huibin Zhou, Kaiheng Zou, Yuxiang Duan, Narek Karapetyan, Runzhou Zhang, Amir Minoofar, Haoqian Song, Kai Pang, Shlomo Zach, Andreas F. Molisch, Moshe Tur, and Alan E. Willner, "THz Integrated Circuit with a Pixel Array to Multiplex Two 10-Gbit/s QPSK Channels Each on a Different OAM Beam for Mode-Division-Multiplexing," **IEEE/Optica Conference on Optical Fiber Communications (OFC)**, ***Postdeadline Paper***, paper **Th4B.4**, Mar. 2022 (Optica, Washington, D.C., 2022).

46. Hao Song, Runzhou Zhang, Huibin Zhou, Xinzhou Su, Kaiheng Zou, Yuxiang Duan, Haoqian Song, Kai Pang, Nanzhe Hu, Narek Karapetyan, Amir Minoofar, Moshe Tur, Alan E. Willner, "Demonstration of Turbulence Resilient Self-Coherent Free-Space Optical Communications Using a Pilot Tone and an Array of Smaller Photodiodes for Bandwidth Enhancement," **IEEE/Optica Conference on Optical Fiber Communications (OFC)**, paper **M4I.4**, Mar. 2022 (Optica, Washington, D.C., 2022).

47. Haoqian Song, Runzhou Zhang, Huibin Zhou, Kaiheng Zou, Nanzhe Hu, Xinzhou Su, Hao Song, Kai Pang, Yuxiang Duan, Daeyoung Park, Brittany Lynn, Greg Gbur, Aristide Dogariu, Richard Watkins, Jerome Miller, Eric Johnson, Moshe Tur, and Alan E. Willner, "Demonstration of an Air-Water Communication Link Through Dynamic Aerosol and Water Curvature when Considering the 2-D Modal Coupling of a Spatially Structured Beam," **IEEE/Optica Conference on Optical Fiber Communications (OFC)**, paper **M4I.5**, Mar. 2022 (Optica, Washington, D.C., 2022).

48. Xinzhou Su, Yuxiang Duan, Huibin Zhou, Hao Song, Kai Pang, Cong Liu, Kaiheng Zou, Runzhou Zhang, Haoqian Song, Nanzhe Hu, Moshe Tur, Alan E. Willner, "Experimental Demonstration of Adaptive-Optics-Based Turbulence Mitigation in a Mode-Multiplexed Free-Space Optical Link by Using both Radial and Azimuthal Spatial Indices," **IEEE/Optica Conference on Optical Fiber Communications (OFC)**, paper **M4I.2**, Mar. 2022 (Optica, Washington, D.C., 2022).

REFEREED CONFERENCE PROCEEDINGS: (CONTINUED)

49. Kaiheng Zou, Kai Pang, Amir Minoofar, Hao Song, Maxim Karpov, Murat Yessenov, Zhe Zhao, Xinzhou Su, Huibin Zhou, Runzhou Zhang, Haoqian Song, Nanzhe Hu, Tobias Kippenberg, Ayman Abouraddy, Moshe Tur, and Alan E. Willner, "Experimental Generation of OAM +1 and +3 Spatiotemporal Beams with a Time-Dependent Beam Radius of ~0.24-to-~0.68 mm Using a Coherent Combination of Multiple Frequencies Each Containing Multiple LG Modes," **Frontiers in Optics (FiO) 2021**, paper **FW5C.5**, Nov. 2021 (Optica, Washington, D.C., 2021).

50. Kai Pang, Kaiheng Zou, Hao Song, Maxim Karpov, Murat Yessenov, Zhe Zhao, Amir Minoofar, Runzhou Zhang, Haoqian Song, Huibin Zhou, Xinzhou Su, Nanzhe Hu, Tobias Kippenberg, Ayman Abouraddy, Moshe Tur, and Alan E. Willner, "Experimental Generation of Near-Diffraction-Free OAM Pulses Having a Controllable Group Velocity from 1.0069c-0.9933c by Coherently Combining Different Beams of Multiple Correlated Bessel Modes and Frequencies," **Frontiers in Optics (FiO) 2021**, paper **FW5C.1**, Nov. 2021 (Optica, Washington, D.C., 2021).

51. Huibin Zhou, Nanzhe Hu, Xinzhou Su, Runzhou Zhang, Haoqian Song, Hao Song, Kai Pang, Kaiheng Zou, Amir Minoofar, Moshe Tur, and Alan E. Willner, "Experimental Demonstration of a 100-Gbit/s 16-QAM Free-Space Optical Link Using a Structured Optical "Bottle Beam" to Circumvent Obstructions," **European Conference on Optical Communications (ECOC)**, paper **Th1B.3**, Bordeaux, France, Sept. 2021.

    **** Selected by the subcommittee as a "Top-Scored Paper" and upgraded to an invited "Extended Talk" (~5% of the accepted submissions). ****

52. Amir Minoofar, Xinzhou Su, Huibin Zhou, Fatemeh Alishahi, Kai Pang, Kaiheng Zou, Runzhou Zhang, Shlomo Zach, Moshe Tur, Andreas F. Molisch, Hirofumi Sasaki, Doohwan Lee, and Alan E. Willner, "Experimental Demonstration of Free-Space sub-THz Communications Link Using Multiplexing of Beams Having Two Different LG Modal Indices," **European Conference on Optical Communications (ECOC)**, paper **Th2B.3**, Bordeaux, France, Sept. 2021.

    **** Selected by the subcommittee as a "Highly Scored Paper" (~5% of the submissions). ****

53. Karapet Manukyan, Alam Zahirul, Cong Liu, Kai Pang, Joshua R. Hendrickson, Evan M. Smith, Dennis E. Walker, Shivashankar Vangala, Moshe Tur, Robert W. Boyd, Alan E. Willner, "Manipulation of Ultrafast Pulses Using Epsilon-Near-Zero Based Plasmonic Nonlinear Metasurface," **OSA Nonlinear Optics Topical Meeting**, paper **NW3B.2**, August 2021 (Optical Society of America, Washington, D.C., 2021).

54. Fatemeh Alishahi, Kaiheng Zou, Amir Minoofa, Huibin Zhou, Moshe Tur, Jonathan Habif, and Alan E. Willner, "Demonstration of a Tunable Optical Correlation of a 10-15 Gbaud QPSK Data Signal using Nonlinear Wave Mixing at a Remotely Controlled Node," **IEEE Photonics Conference (IPC) 2021**, paper **ThE2.3**, Oct. 2021 (IEEE, Piscataway, NJ, 2021).

55. Xinzhou Su, Nanzhe Hu, Amir Minoofar, Hao Song, Huibin Zhou, Zhe Zhao, Runzhou Zhang, Kai Pang, Cong Liu, Kaiheng Zou, Haoqian Song, Brittany Lynn, Shlomo Zach, Moshe Tur, Andreas F. Molisch, Hirofumi Sasaki, Doohwan Lee, and Alan E. Willner, "Modal Purity and LG Coupling of an OAM Beam Reflected by a Rough Surface for NLoS THz Links," **IEEE International Conference on Communications (ICC), Workshop on Orbital Angular Momentum Transmission**, paper **1570791847**, June 2021 (IEEE, Piscataway, NJ, 2021).

56. Yiyu Zhou, Boris Braverman, Jiapeng Zhao, Runzhou Zhang, Kai Pang, Alexander Fyffe, Alan E. Willner, Zhimin Shi, and Robert W. Boyd, "Modal Crosstalk Suppresion for Optical Mode-division Multiplexing by Digital Time Reversal," **SPIE Photonics North**, May 2021.

57. Hao Song, Huibin Zhou, Kaiheng Zou, Runzhou Zhang, Kai Pang, Haoqian Song, Xinzhou Su, Amir Minoofar, Nanzhe Hu, Cong Liu, Robert Bock, Brittany Lynn, Shlomo Zach, Moshe Tur, and Alan E.

REFEREED CONFERENCE PROCEEDINGS: (CONTINUED)

Willner, "Demonstration of a Tunable, Broadband Pixel-Array-based Photonic-Integrated-Circuit Receiver for Recovering Two 100-Gbit/s QPSK Orbital-Angular-Momentum Multiplexed Channels," **IEEE/OSA Conference on Optical Fiber Communications (OFC),** paper **W7A.2**, June 2021 (Optical Society of America, Washington, D.C., 2021).

**** Selected by the subcommittee as a "Top-Scored Paper" (~5% of the submissions). ****

58. Haoqian Song, Runzhou Zhang, Nanzhe Hu, Huibin Zhou, Xinzhou Su, Kaiheng Zou, Kai Pang, Hao Song, Cong Liu, Brittany Lynn, Daeyoung Park, Moshe Tur, and Alan E. Willner, "Demonstration of 2-Gbit/s Free-Space Optical Communications Through Dynamic Aerosol and Dynamic Water Interface using Orbital-Angular-Momentum Multiplexing," **IEEE/OSA Conference on Optical Fiber Communications (OFC),** paper **W6A.25**, June 2021 (Optical Society of America, Washington, D.C., 2021).

59. Xinzhou Su, Huibin Zhou, Kaiheng Zou, Amir Minoofar, Hao Song, Runzhou Zhang, Kai Pang, Haoqian Song, Nanzhe Hu, Zhe Zhao, Ahmed Almaiman, Shlomo Zach, Moshe Tur, Andreas Molisch, Hirofumi Sasaki, Doohwan Lee, and Alan E. Willner, "Demonstration of 8-Channel 32-Gbit/s QPSK Wireless Communications at 0.28-0.33 THz Using 2 Frequency, 2 Polarization, and 2 Mode Multiplexing," **IEEE/OSA Conference on Optical Fiber Communications (OFC),** paper **M3J.4**, June 2021 (Optical Society of America, Washington, D.C., 2021).

60. Kaiheng Zou, Kai Pang, Hao Song, Jintao Fan, Zhe Zhao, Haoqian Song, Runzhou Zhang, Huibin Zhou, Amir Minoofar, Cong Liu, Xinzhou Su, Nanzhe Hu, Andrew McClung, Mahsa Torfeh, Amir Arbabi, Moshe Tur, and Alan E. Willner, "Demonstration of Free-Space 300-Gbit/s QPSK Communications Using Both Wavelength- and Mode-Division-Multiplexing in the Mid-IR," **IEEE/OSA Conference on Optical Fiber Communications (OFC),** paper **W7E.5**, June 2021 (Optical Society of America, Washington, D.C., 2021).

61. Nanzhe Hu, Huibin Zhou, Runzhou Zhang, Haoqian Song, Kai Pang, Kaiheng Zou, Hao Song, Xinzhou Su, Cong Liu, Brittany Lynn, Moshe Tur, and Alan E. Willner, "Experimental Demonstration of a 1-Gbit/s "Pin-like" Low-Divergence Beam Using a Limited-Sized Receiver Aperture at Various Distances," **IEEE/OSA Conference on Optical Fiber Communications (OFC),** paper **W7E.1**, June 2021 (Optical Society of America, Washington, D.C., 2021).

62. Fatemeh Alishahi, Amir Minoofar, Ahmad Fallahpour, Kaiheng Zou, Huibin Zhou, Jonathan Habif, Moshe Tur, and Alan E. Willner, "Experimental Demonstration of Remotely Controlled and Powered Tunable Optical 2-4 Taps Correlator of a 20-100 Gbit/s QPSK Channel Based on Laser-Delivered Bias and Control Signals," **IEEE/OSA Conference on Optical Fiber Communications (OFC),** paper **W6A.20**, June 2021 (Optical Society of America, Washington, D.C., 2021).

63. Huibin Zhou, Xinzhou Su, Amir Minoofar, Runzhou Zhang, Hao Song, Kai Pang, Kaiheng Zou, Haoqian Song, Nanzhe Hu, Zhe Zhao, Ahmed Almaiman, Shlomo Zach, Moshe Tur, Andreas Molisch, Hirofumi Sasaki, Doohwan Lee, Alan E. Willner, "Experimental Demonstration of 8-Gbit/s QPSK Communications Using Two Multiplexed Orbital-Angular-Momentum Beams in the 0.27-0.32 THz Range," **APS/IEEE/OSA Conference on Lasers and Electro-Optics (CLEO)**, paper **STh2F.7**, May 2021 (Optical Society of America, Washington, D.C., 2021).

64. Haoqian Song, Runzhou Zhang, Nanzhe Hu, Huibin Zhou, Xinzhou Su, Kaiheng Zou, Kai Pang, Hao Song, Cong Liu, Brittany Lynn, Moshe Tur, Alan E. Willner, "Experimental Investigation on Degradation of an Orbital-Angular-Momentum Beam Passing Through Dynamic Aerosol and Air-Water Interface for Air-to-Water Communications," **APS/IEEE/OSA Conference on Lasers and Electro-Optics (CLEO)**, paper **SM4A.5**, May 2021 (Optical Society of America, Washington, D.C., 2021).

65. Karapet Manukyan, Cong Liu, Zahirul Alam, Kai Pang, Hao Song, Ahmad Fallahpour, Joshua R. Hendrickson, Evan M. Smith, Dennis E. Walker, Shivashankar Vangala, Robert Boyd, Moshe Tur, Alan E.

REFEREED CONFERENCE PROCEEDINGS: (CONTINUED)

Willner, "Demonstration of Wavelength Conversion by FWM Near 1550-nm in a Sub-Wavelength Antenna-ENZ Metasurface," **APS/IEEE/OSA Conference on Lasers and Electro-Optics (CLEO)**, paper **FW4H.5**, May 2021 (Optical Society of America, Washington, D.C., 2021).

66. Kiyoul Yang, Alexander White, Fashid Ashtiani, Lin Chang, Hao Song, Kaiheng Zou, Huibin Zhou, Kai Pang, Geun Ho Ahn, Andy Netherton, Jinhie Lee Skarda, Logan Su, Dries Vercruysse, Jean Philipe MacLean, Shahriar Aghaeimeibodi, Alan E. Willner, John Bowers, Firooz Aflatouni, Jelena Vuckovic, "Inverse-Designed Optical Link for Chip-to-Chip Communication," **APS/IEEE/OSA Conference on Lasers and Electro-Optics (CLEO)**, paper **SM4C.4**, May 2021 (Optical Society of America, Washington, D.C., 2021).

67. Nanzhe Hu, Runzhou Zhang, Haoqian Song, Jing Du, Xinzhou Su, Huibin Zhou, Hao Song, Kai Pang, Kaiheng Zou, Amir Minoofar, Moshe Tur, Alan E. Willner, "Experimental Demonstration of Turbulence-Resilient Object Reconstruction by Optoelectronic Mixing of Sequentially Transmitted Pairs of Laguerre-Gaussian Modes," **APS/IEEE/OSA Conference on Lasers and Electro-Optics (CLEO)**, paper **STu2F.6**, May 2021 (Optical Society of America, Washington, D.C., 2021).

68. Nanzhe Hu, Haoqian Song, Runzhou Zhang, Huibin Zhou, Cong Liu, Xinzhou Su, Hao Song, Kai Pang, Kaiheng Zou, Brittany Lynn, Moshe Tur, Alan E. Willner, "Demonstration of Turbulence Mitigation in a 200-Gbit/s Orbital-Angular-Momentum Multiplexed Free-Space Optical Link using Simple Power Measurements on a Probe Wavelength," **APS/IEEE/OSA Conference on Lasers and Electro-Optics (CLEO)**, paper **STu1E.4**, May 2021 (Optical Society of America, Washington, D.C., 2021).

69. Hao Song, Huibin Zhou, Kaiheng Zou, Runzhou Zhang, Kai Pang, Haoqian Song, Amir Minoofar, Xinzhou Su, Nanzhe Hu, Cong Liu, Robert Bock, Shlomo Zach, Moshe Tur, Alan E. Willner, "Experimental Demonstration of an Integrated Broadband Pixel-Array Structure Generating Two Tunable Orbital-Angular-Momentum Mode Values and Carrying 100-Gbit/s QPSK Data," **APS/IEEE/OSA Conference on Lasers and Electro-Optics (CLEO)**, paper **SM4C.3**, May 2021 (Optical Society of America, Washington, D.C., 2021).

**** Upgraded by the subcommittee to an invited "Highlighted Talk" (~5% of the accepted submissions). ****

70. Kai Pang, Kaiheng Zou, Zhe Zhao, Hao Song, Yiyu Zhou, maxim karpov, Murat Yessenov, Abbas Shiri, Haoqian Song, Runzhou Zhang, Huibin Zhou, Xinzhou Su, Nanzhe Hu, Amir Minoofar, Tobias Kippenberg, Robert Boyd, Ayman Abouraddy, Moshe Tur, and Alan E. Willner, "Experimental Demonstration of Dynamic Spatiotemporal Structured Beams that Exhibit Two Orbital-Angular-Momenta Simultaneously Using a Kerr Frequency Comb," **APS/IEEE/OSA Conference on Lasers and Electro-Optics (CLEO)**, paper **STu1D.1**, May 2021 (Optical Society of America, Washington, D.C., 2021).

71. Ahmad Fallahpour, Amir Minoofar, Fatemeh Alishahi, Kaiheng Zou, Samer Idres, Hossein Hashemi, Jonathan Habif, Moshe Tur, Alan E. Willner, "Experimental Demonstration of Remotely Controlled and Powered Optical Switching Based on Laser-Delivered Bias and Control Signals," **APS/IEEE/OSA Conference on Lasers and Electro-Optics (CLEO)**, paper **STh1F.7**, May 2021 (Optical Society of America, Washington, D.C., 2021).

72. Fatemeh Alishahi, Ahmad Fallahpour, Kaiheng Zou, Amir Minoofar, Cong Liu, Huibin Zhou, Jonathan Habif, Moshe Tur, and Alan E. Willner, "Optical Signal Processing Performance Dependence on Non-Ideal MZI Operation in a Tapped-Delay-Line," **APS/IEEE/OSA Conference on Lasers and Electro-Optics (CLEO)**, paper **JTu3A.52**, May 2021 (Optical Society of America, Washington, D.C., 2021).

73. Huibin Zhou, Hao Song, Runzhou Zhang, Nanzhe Hu, Kaiheng Zou, Haoqian Song, Kai Pang, Xinzhou Su, Cong Liu, Amir Minoofar, Brittany Lynn, Daeyoung Park, Moshe Tur, and Alan E. Willner, "Demonstration of Turbulence Resiliency in a Mode-, Polarization-, and Wavelength- Multiplexed Free-Space Optical Link

REFEREED CONFERENCE PROCEEDINGS: (CONTINUED)

using Pilot Tones and Optoelectronic Wave Mixing," **European Conference on Optical Communication (ECOC) 2020**, paper **We2G-4**, Belgium, Brussels, Dec. 2020.

***Selected by the subcommittee as a "Highly Scored Paper" (~5% of the accepted submissions). ***

74. Cong Liu, M. Zahirul Alam, Karapet Manukyan, Kai Pang, Yiyu Zhou, Hao Song, Xinzhou Su, Joshua R. Hendrickson, Evan M. Smith, Moshe Tur, Robert W. Boyd, and Alan E. Willner, "Generation of Pulses with Dynamic Polarization Evolution Using Time-Varying Epsilon-Near-Zero Metasurface," **IEEE Photonics Conference (IPC) 2020,** paper **TuE4.4**, Sept. 2020 (IEEE, Piscataway, NJ, 2020).

75. Karapet Manukyan, M. Zahirul Alam, Cong Liu, Kai Pang, Yiyu Zhou, Zhe Zhao, Hao Song, Moshe Tur, Robert W. Boyd, and Alan E. Willner, "Nonlinear Response of ENZ Plasmon Modes near 1550 nm," **IEEE Photonics Conference (IPC) 2020,** paper **WF4.5**, Sept. 2020 (IEEE, Piscataway, NJ, 2020).

76. Kai Pang, Kaiheng Zou, Hao Song, Zhe Zhao, Amir Minoofar, Runzhou Zhang, Cong Liu, Haoqian Song, Huibin Zhou, Xinzhou Su, Nanzhe Hu, Moshe Tur, and Alan E. Willner, "Near-Diffraction- and Near-Dispersion-Free OAM Pulse Having a Controllable Group Velocity by Coherently Combining Different Bessel Beams Based on Space-Time Correlations," **OSA Frontiers in Optics (FiO) 2020**, paper **FM7C.7**, Sept. 2020 (Optical Society of America, Washington, D.C., 2020).

77. Kaiheng Zou, Zhe Zhao, Hao Song, Kai Pang, Amir Minoofar, Xinzhou Su, Huibin Zhou, Runzhou Zhang, Haoqian Song, Nanzhe Hu, Cong Liu, Moshe Tur, and Alan E. Willner, "Generation of a Space-Time Pulse with a Controllable Group Velocity as a Function of Distance Utilizing Classical Entanglement by Combining Multiple Frequencies Each Containing Multiple Laguerre-Gaussian Modes," **OSA Frontiers in Optics (FiO) 2020**, paper **FTh2B.5**, Sept. 2020 (Optical Society of America, Washington, D.C., 2020).

78. Huibin Zhou, Hao Song, Zhe Zhao, Runzhou Zhang, Haoqian Song, Kai Pang, Cong Liu, Xin Zhou, Nanzhe Hu, Robert Bock, Brittany Lynn, Moshe Tur, and Alan E. Willner, "Modal Properties of a Beam Carrying OAM Generated by a Circular Array of Multiple Ring-Resonator Emitters," **OSA Frontiers in Optics (FiO) 2020**, paper **FW4D.1**, Sept. 2020 (Optical Society of America, Washington, D.C., 2020).

79. Hao Song, Zhe Zhao, Kaiheng Zou, Kai Pang, Amir Minoofar, Xinzhou Su, Huibin Zhou, Runzhou Zhang, Haoqian Song, Nanzhe Hu, Cong Liu, Moshe Tur, and Alan E. Willner, "Generation of a Space-Time Light Sheet with Reduced Diffraction Utilizing Classical Entanglement by Combining Multiple Frequencies Each Containing Multiple Hermite-Gaussian Modes," **OSA Frontiers in Optics (FiO) 2020**, paper **FTh5B.6**, Sept. 2020 (Optical Society of America, Washington, D.C., 2020).

80. Amir Minoofar, Zhe Zhao, Ahmad Fallahpour, Hao Song, Runzhou Zhang, Kaiheng Zou, Kai Pang, Moshe Tur, and Alan E. Willner, "Generation of a Spatiotemporal OAM Beam with a Time-Variant Beam Waist Using Coherent Combination of Multiple Frequencies Each Containing Multiple LG modes," **OSA Frontiers in Optics (FiO) 2020**, paper **FM7C.4**, Sept. 2020 (Optical Society of America, Washington, D.C., 2020).

81. Xinzhou Su, Runzhou Zhang, Zhe Zhao, Hao Song, Amir Minoofar, Nanzhe Hu, Huibin Zhou, Kaiheng Zou, Kai Pang, Haoqian Song, Brittany Lynn, Shlomo Zach, Nadav Cohen, Moshe Tur, Andreas F. Molisch, Hirofumi Sasaki, Doohwan Lee, and Alan E. Willner, "Multipath and Receiver Aperture Effects in a THz Wireless Communications Link using OAM Multiplexing," **IEEE Global Communications Conference (GLOBECOM) 2020, Workshop on High Capacity Wireless Communications**, paper **1570664635**, Taipei, Taiwan, Dec. 2020 (IEEE, Piscataway, NJ, 2020).

82. Runzhou Zhang, Nanzhe Hu, Kaiheng Zou, Huibin Zhou, Xinzhou Su, Zhe Zhao, Haoqian Song, Hao Song, Ahmed Almaiman, Kai Pang, Cong Liu, Brittany Lynn, Moshe Tur, and Alan E. Willner, "Experimental Demonstration of Crosstalk Reduction to Achieve Turbulence-Resilient Multiple-OAM-Beam Free-Space Optical Communications Using Pilot Tones to Mix Beams at the Receiver," **APS/IEEE/OSA Conference**

REFEREED CONFERENCE PROCEEDINGS: (CONTINUED)

on Lasers and Electro-Optics (CLEO), paper **SW4L.4**, San Jose, CA, May 2020 (Optical Society of America, Washington, D.C., 2020).

83. Cong Liu, M. Zahirul Alam, Kai Pang, Karapet Manukyan, Joshua Hendrickson, Evan Smith, Yiyu Zhou, Orad Reshef, Hao Song, Runzhou Zhang, Haoqian Song, Fatemeh Alishahi, Ahmad Fallahpour, Ahmed Almaiman,Robert Boyd, Moshe Tur, and Alan E. Willner, "Experimental Demonstration of Self-Phase-Modulation Induced Wavelength Shift in an 80-nm thick ITO-ENZ Material in the Telecom C Band," **APS/IEEE/OSA Conference on Lasers and Electro-Optics (CLEO)**, paper **FTu3Q.5**, San Jose, CA, May 2020 (Optical Society of America, Washington, D.C., 2020).

84. Karapet Manukyan, M. Zahirul Alam, Cong Liu, Kai Pang, Hao Song, Zhe Zhao, Moshe Tur, Robert Boyd, and Alan E. Willner, "Interaction Between a Nanoantenna Array and an Epsilon-Near-Zero Thin Film: Ultrastrong Coupling and Resonance Pinning for Engineered Highly Nonlinear Metasurface," **APS/IEEE/OSA Conference on Lasers and Electro-Optics (CLEO)**, paper **FM1B.6**, San Jose, CA, May 2020 (Optical Society of America, Washington, D.C., 2020).

85. Kai Pang, M. Zahirul Alam, Yiyu Zhou, Orad Reshef, Cong Liu, Karapet Manukyan, Matt Voegtle, Anuj Pennathur, Cindy Tseng, Xinzhou Su, Hao Song, Zhe Zhao, Runzhou Zhang, Haoqian Song, Nanzhe Hu, Ahmed Almaiman, Jahan Dawlaty, Robert Boyd, Moshe Tur, and Alan E. Willner, "Plasmonic Nanoantenna-Enhanced Adiabatic Wavelength Conversion Using a Time-varying Epsilon-near-zero-based Metasurface," **APS/IEEE/OSA Conference on Lasers and Electro-Optics (CLEO)**, paper **FTh4Q.6**, San Jose, CA, May 2020 (Optical Society of America, Washington, D.C., 2020).

86. Ahmed Almaiman, Hao Song, Amir Minoofar, Haoqian Song, Runzhou Zhang, Xinzhou Su, Kaiheng Zou, Kai Pang, Cong Liu,Peicheng Liao, Nanzhe Hu, Zhe Zhao, Moshe Tur, and Alan E. Willner, "Experimental Demonstration of a Data Correlation and Data Equalization Using a Tunable Optical Tapped-Delay-Line Using the Spatial Domain and Modal-Dependent Delay," **APS/IEEE/OSA Conference on Lasers and Electro-Optics (CLEO)**, paper **STu3O.3**, San Jose, CA, May 2020 (Optical Society of America, Washington, D.C., 2020).

87. Zhe Zhao, Runzhou Zhang, Hao Song, Kai Pang, Ahmed Almaiman, Huibin Zhou, Haoqian Song, Cong Liu, Nanzhe Hu, Xinzhou Su, Amir Minoofar, Shlomo Zach, Nadav Cohen, Moshe Tur, Andreas Molisch, and Alan E. Willner, "Fundamental System-Degrading Effects in THz Communications Using Multiple OAM Beams With Turbulence," **IEEE International Conference on Communications (ICC)**, paper **WC24-4**, Dublin, Ireland, June 2020 (IEEE, Piscataway, NJ, 2020).

88. Naveed A. Abbasi, Arjun Hariharan, Arun Moni Nair, Ahmed S. Almaiman, Franc¸ois B. Rottenberg, Alan E. Willner, and Andreas F. Molisch, "Double Directional Channel Measurements for THz Communications in an Urban Environment," **IEEE International Conference on Communications (ICC)**, paper **1570607550**, Dublin, Ireland, June 2020 (IEEE, Piscataway, NJ, 2020).

89. Youichi Akasaka, Yinwen Cao, Shigehiro Takasaka, Ryuichi Sugizaki, Haoqian Song, Alan E. Willner, and Tadashi Ikeuchi, "Signal-Power Dynamic Range Enlargement of a Raman-Assisted Phase-Sensitive-Amplifier," **25th Optoelectronics and Communications Conference (OECC 2020)**, paper **240035**, Taipei, Taiwan, Oct. 2020.

90. Yiyu Zhou, Boris Braverman, Alexander Fyffe, Runzhou Zhang, Jiapeng Zhao, Alan E. Willner, Zhimin Shi, and Robert W. Boyd, "Vectorial Phase Conjugation for High-Fidelity Mode Transmission Through Multimode Fiber," **OSA Advanced Photonics Congress (AP) 2020**, paper **NeW2B.5**, Washington, DC, July 2020 (Optical Society of America, Washington, D.C., 2020).

91. Kaiheng Zou, Peicheng Liao, Huibin Zhou, Ahmad Fallahpour, Amir Minoofar, Ahmed Almaiman, Fatemeh Alishahi, Moshe Tur, and Alan E. Willner, "Experimental Demonstration of an Optical Second-Order

REFEREED CONFERENCE PROCEEDINGS: (CONTINUED)

Volterra Nonlinear Filter using Wave Mixing and Delays to Equalize a 20-Gbaud 4-APSK Channel," **IEEE/OSA Conference on Optical Fiber Communications (OFC),** paper **M1I.2**, San Diego, CA, Mar. 2020 (Optical Society of America, Washington, D.C., 2020).

92. Hao Song, Xinzhou Su, Haoqian Song, Runzhou Zhang, Zhe Zhao, Kaiheng Zou, Cong Liu, Kai Pang, Nanzhe Hu, Ahmed Almaiman, Moshe Tur, Alan E. Willner, Shlomo Zach, Nadav Cohen, Andreas Molisch, and Robert Boyd, "Simultaneous Turbulence Mitigation and Mode Demultiplexing using one MPLC in a Two-Mode 200-Gbit/s Free-Space OAM-Multiplexed Link," **IEEE/OSA Conference on Optical Fiber Communications (OFC),** paper **W1G.3**, San Diego, CA, Mar. 2020 (Optical Society of America, Washington, D.C., 2020).

**** Selected by the subcommittee as a "Top-Scored Paper" (~5% of the submissions). ****

93. Runzhou Zhang, Nanzhe Hu, Xinzhou Su, Ahmed Almaiman, Haoqian Song, Zhe Zhao, Hao Song, Kai Pang, Cong Liu, Moshe Tur, and Alan E. Willner, "Alignment Monitor for Free-Space Optical Links in the Presence of Turbulence using the Beating of Opposite-Order Orbital-Angular-Momentum Beams on Two Different Wavelengths," **IEEE/OSA Conference on Optical Fiber Communications (OFC),** paper **Th1K.6**, San Diego, CA, Mar. 2020 (Optical Society of America, Washington, D.C., 2020).

94. Kai Pang, Haoqian Song, Xinzhou Su, Kaiheng Zou, Zhe Zhao, Hao Song, Ahmed Almaiman, Runzhou Zhang, Cong Liu, Nanzhe Hu, Shlomo Zach, Nadav Cohen, Brittany Lynn, Andreas Molisch, Robert Boyd, Moshe Tur, and Alan E. Willner, "Simultaneous Orthogonalizing and Shaping of Multiple LG Beams to Mitigate Crosstalk and Power Loss by Transmitting Each of Four Data Channels on Multiple Modes in a 400-Gbit/s Free-Space Link," **IEEE/OSA Conference on Optical Fiber Communications (OFC),** paper **W1G.2**, San Diego, CA, Mar. 2020 (Optical Society of America, Washington, D.C., 2020).

95. Huibin Zhou, Kaiheng Zou, Peicheng Liao, Ahmed Almaiman, Fatemeh Alishahi, Ahmad Falahpour, Amir Minoofar, Moshe Tur, and Alan E. Willner, "WDM Operation and Multiple Dispersion Elements for a Direct-Detection System using Phase Retrieval," **IEEE/OSA Conference on Optical Fiber Communications (OFC),** paper **W4A.4**, San Diego, CA, Mar. 2020 (Optical Society of America, Washington, D.C., 2020).

96. Ahmad Fallahpour, Fatemeh Alishahi, Amir Minoofar, Kaiheng Zou, Ahmed Almaiman, Peicheng Liao, Huibin Zhou, Moshe Tur, and Alan E. Willner, "16-QAM Probabilistic Constellation Shaping by Learning the Distribution of Transmitted Symbols from the Training Sequence," **IEEE/OSA Conference on Optical Fiber Communications (OFC),** paper **M1G.4**, San Diego, CA, Mar. 2020 (Optical Society of America, Washington, D.C., 2020).

97. Armand Vedadi, Paul F. McManamon, Alan E. Willner, Dipayan Choudhary, Nick Montifiore, Ryan Howard, and Ohad Harlev, "A revolutionary optical hyper data center using ultra-high data rate laser communications," **Proc. SPIE 11272, Free-Space Laser Communications XXXII**, 112721Q, 2020.

98. Naveed A. Abbasi, Arjun Hariharan, Arun Moni Nair, Ahmed S. Almaiman, Francois B. Rottenberg, Alan E. Willner, and Andreas F. Molisch, "Long-Distance Double Directional Channel Measurements for THz Communications," **GoMacTech**, paper **P3.10**, San Diego, CA, Mar. 2020.

99. Ahmed Almaiman, Haoqian Song, Kai Pang, Runzhou Zhang, Long Li, Zhe Zhao, Hao Song, Cong Liu, Karapet Manukyan, Shlomo Zach, Nadav Cohen, Moshe Tur, and Alan E. Willner, "Demonstration of Using Multiple Orthogonal Spatial Modes for Channel Header Information and Channel Encoding," **European Conference on Optical Communications (ECOC)**, paper **W.2.E.2**, Dublin, Ireland, Sept. 2019.

100. Peicheng Liao, Kaiheng Zou, Huibin Zhou, Yinwen Cao, Ahmed Almaiman, Ahmad Falahpour, Fatemeh Alishahi, Youichi Akasaka, Moshe Tur, and Alan E. Willner, "Experimental Demonstration of Tunable and Reconfigurable Spectrum Sharing of Two Asynchronous QPSK Data Channels using Power Division

REFEREED CONFERENCE PROCEEDINGS: (CONTINUED)

Multiplexing," **European Conference on Optical Communications (ECOC),** paper **P97**, Dublin, Ireland, Sept. 2019.

101. Huibin Zhou, Kaiheng Zou, Peicheng Liao, Yinwen Cao, Ahmed Almaiman, Fatemeh Alishahi, Ahmad Fallahpour, Moshe Tur, and Alan E. Willner, "Experimental Demonstration of Scalable and Reconfigurable Optical Generation of a 240-Gbit/s Super-channel using a Single Stage of Multi-subchannel Nonlinear Wave-Mixing and Optical Frequency Comb," **European Conference on Optical Communications (ECOC),** paper **P44**, Dublin, Ireland, Sept. 2019.

102. Runzhou Zhang, Hao Song, Haoqian Song, Zhe Zhao, Kai Pang, Jing Du, Kaiheng Zou, Cong Liu, Huibin Zhou, Karapet Manukyan, Moshe Tur, and Alan E. Willner, "Experimental Demonstration of Utilizing Adaptive Optics to Mitigate Intra-Modal-Group Power Coupling of Few-Mode-Fiber in a Two-Channel 20-Gbit/s QPSK Mode-Division-Multiplexed System," **European Conference on Optical Communications (ECOC)**, paper **W.3.C.2**, Dublin, Ireland, Sept. 2019.

103. Haoqian Song, Ahmed Almaiman, Hao Song, Zhe Zhao, Runzhou Zhang, Kai Pang, Cong Liu, Long Li, Karapet Manukyan, Shlomo Zach, Nadav Cohen, Moshe Tur, and Alan E. Willner, " "Hiding" A Low-intensity 50-gbit/s QPSK Free-space Optical Beam That Co-axially Propagates on the Same Wavelength with a high-intensity 50-Gbit/s QPSK Optical Beam using Orthogonal Mode Multiplexing, " **IEEE Research and Applications of Photonics in Defense Conference (RAPID)**, paper **TuF3.3**, Miramar Beach, FL, Aug. 2019.

104. M. Zahirul Alam, Yiyu Zhou, Mohammad Karimi, Jeremy Upham, Orad Reshef, Cong Liu, Alan Willner, and Robert Boyd, "Epsilon-Near-Zero Material for Time Refraction," **Nonlinear Optics, Postdeadline paper NTh3A.4**, Waikoloa Beach, Hawaii, July 2019.

105. Yiyu Zhou, Mohammad Karimi, Jeremy Upham, Orad Reshef, Cong Liu, Alan E Willner, M Zahirul Alam, Robert W Boyd, "Frequency Conversion Through Time Refraction using an Epsilon-Near-Zero Material," **APS/IEEE/OSA Conference on Lasers and Electro-Optics (CLEO)**, paper **FF1B.3**, San Jose, CA, May 2019 (OSA, Wash., D.C., 2019).

106. Cong Liu, Kai Pang, Karapet Manukyan, Orad Reshef, Yiyu Zhou, Joel Patrow, Anuj Pennathur, Hao Song, Zhe Zhao, Runzhou Zhang, Fatemeh Alishahi, Ahmad Fallahpour, Yinwen Cao, Ahmed Almaiman, Jahan M Dawlaty, N Apurv Chaitanya, Israel De Leon, M Zahirul Alam, Robert W Boyd, Moshe Tur, Alan E Willner, "Resonance Splitting and Enhanced Optical Nonlinearities in ITO-based Epsilon-near-zero Metasurface with Cross-shaped Nanoantennas," **APS/IEEE/OSA Conference on Lasers and Electro-Optics (CLEO)**, paper **FW4B.5**, San Jose, CA, May 2019 (OSA, Wash., D.C., 2019).

107. Zhe Zhao, Runzhou Zhang, Hao Song, Haoqian Song, Long Li, Jing Du, Cong Liu, Kai Pang, Ahmed Almaiman, Robert W Boyd, Moshe Tur, Alan E Willner, "Generating a Twisted Spatiotemporal Wave Packet using Coherent Superposition of Structured Beams with Different Frequencies," **APS/IEEE/OSA Conference on Lasers and Electro-Optics (CLEO)**, paper **JTu2A.67**, San Jose, CA, May 2019 (OSA, Wash., D.C., 2019).

108. Runzhou Zhang, Hao Song, Zhe Zhao, Haoqian Song, Jing Du, Guodong Xie, Long Li, Kai Pang, Cong Liu, Ahmed Almaiman, Shlomo Zach, Nadav Cohen, Moshe Tur, Alan E Willner, "Scattered Complex Laguerre-Gaussian Spectrum to Determine the 2-D Transverse Position of a Spherical Silica Particle," **APS/IEEE/OSA Conference on Lasers and Electro-Optics (CLEO)**, paper **JTu2A.57**, San Jose, CA, May 2019 (OSA, Wash., D.C., 2019).

109. Hao Song, Zhe Zhao, Runzhou Zhang, Jing Du, Haoqian Song, Long Li, Kai Pang, Cong Liu, Ahmed Almaiman, Robert Bock, Moshe Tur, Alan E Willner, "Using an Integrated Silicon Emitter to Generate Two Coaxial Orbital-Angular-Momentum Beams with Tunable Mode Orders and Broad Bandwidth,"

REFEREED CONFERENCE PROCEEDINGS: (CONTINUED)

APS/IEEE/OSA Conference on Lasers and Electro-Optics (CLEO), paper **SM1J.5**, San Jose, CA, May 2019 (OSA, Wash., D.C., 2019).

110. Kaiheng Zou, Peicheng Liao, Changjing Bao, Yinwen Cao, Arne Kordts, Ahmed Almaiman, Maxim Karpov, Martin Hubert Peter Pfeiffer, Fatemeh Alishahi, Ahmad Fallahpour, Moshe Tur, Tobias J Kippenberg, Alan E Willner, "Demonstration of Kramers-Kronig Detection of Four 20-Gbaud 16-QAM Channels after 50-km Transmission Using Kerr Combs to Perform Shared Phase Estimation," **APS/IEEE/OSA Conference on Lasers and Electro-Optics (CLEO)**, paper **SM3G.3**, San Jose, CA, May 2019 (OSA, Wash., D.C., 2019).

111. Ahmed Almaiman, Yinwen Cao, Fatemeh Alishahi, Ahmad Fallahpour, Long Li, Peicheng Liao, Kaiheng Zou, Shlomo Zach, Nadav Cohen, Moshe Tur and Alan Willner, "Experimental Characterization of Low-Latency Multiple and Tunable Delays of Wideband Analog LFM Signal Using Concatenated Linearly Chirped and Sampled FBGs," **APS/IEEE/OSA Conference on Lasers and Electro-Optics (CLEO)**, paper **SF2N.3**, San Jose, CA, May 2019 (OSA, Wash., D.C., 2019).

112. Jing Du, Zhe Zhao, Guodong Xie, Runzhou Zhang, Long Li, Haoqian Song, Kai Pang, Cong Liu, Hao Song, Shlomo Zach, Nadav Cohen, Moshe Tur, Alan E Willner, "Experimental Demonstration of Enhanced Accuracy of Beam Radial Displacement and Azimuthal Rotation Measurements using Enhanced Gradient of a Beam Composed of Multiple Orbital Angular-Momentum Modes," **APS/IEEE/OSA Conference on Lasers and Electro-Optics (CLEO)**, paper **SM1N.5**, San Jose, CA, May 2019 (OSA, Wash., D.C., 2019).

113. Haoqian Song, Hao Song, Runzhou Zhang, Karapet Manukyan, Long Li, Zhe Zhao, Kai Pang, Cong Liu, Ahmed Almaiman, Robert Bock, Brittany Lynn, Moshe Tur, and Alan E Willner, " Experimental Mitigation of Atmospheric Turbulence Effect using Pre-Channel Combining Phase Patterns for Uni- and Bi-directional Free-Space Optical Links with Two 100-Gbit/s OAM-Multiplexed Channels," **Postdeadline Paper, IEEE/OSA Conference on Optical Fiber Communications (OFC),** paper **Th4C.4**, San Diego, CA, Mar. 2019 (Optical Society of America, Washington, D.C., 2019).

114. Yinwen Cao, Kaiheng Zou, Huibin Zhou, Ahmed Almaiman, Peicheng Liao, Fatemeh Alishahi, Ahmad Fallahpour, Karapet Manukyan, and Alan E. Willner, "Demonstration of Tunable Optical Single-Sideband Generation of 20-Gbit/s OOK and PAM4 Data Channels," **IEEE/OSA Conference on Optical Fiber Communications (OFC),** paper **M1B.6**, San Diego, CA, Mar. 2019 (Optical Society of America, Washington, D.C., 2019).

115. Long Li, Haoqian Song, Runzhou Zhang, Zhe Zhao, Cong Liu, Kai Pang, Hao Song, Jing Du, Ari Willner, Ahmed Almaiman, Brittany Lynn, Robert Bock, Moshe Tur, and Alan E. Willner, "Demonstration of Both Mode and Space Diversity in a 100-Gbit/s QPSK Free-Space Optical Link to Increase System Tolerance to Turbulence," **IEEE/OSA Conference on Optical Fiber Communications (OFC),** paper **W4A.5**, San Diego, CA, Mar. 2019 (Optical Society of America, Washington, D.C., 2019).

**** Selected by the subcommittee as a "Top-Scored Papers" (10% of the accepted submissions). ****

116. Kaiheng Zou, Zhewei Zhang, Peicheng Liao, Huolei Wang, Yinwen Cao, Ahmed Almaiman, Ahmad Fallahpour, Naresh Satyan, George Rakuljic, Moshe Tur, Amnon Yariv, and Alan E. Willner, "Using a Hybrid Si/III-V Semiconductor Laser to Carry 16- and 64-QAM Data Signals over an 80-km Distance," **IEEE/OSA Conference on Optical Fiber Communications (OFC),** paper **M3A.2**, San Diego, CA, Mar. 2019 (Optical Society of America, Washington, D.C., 2019).

117. Fatemeh Alishahi, Ahmad Fallahpour, Kaiheng Zou, Yinwen Cao, Arne Kordts, Maxim Karpov, Martin Pfeiffer, Peicheng Liao, Ahmed Almaiman, Huibin Zhou, Karapet Manukyan, Tobias Kippenberg, and Alan E. Willner, "Experimental Generation and Time Multiplexing of Data-Carrying Nyquist Sinc Shaped Channels from a Single Microresonator-based Kerr Frequency Comb," **IEEE/OSA Conference on Optical**

REFEREED CONFERENCE PROCEEDINGS: (CONTINUED)

Fiber Communications (OFC), paper **W3I.2**, San Diego, CA, Mar. 2019 (Optical Society of America, Washington, D.C., 2019).

118. Youichi Akasaka, Yinwen Cao, Shigehiro Takasaka, Kenji Yamauchi, Koichi Maeda, Haoqian Song, Ryuichi Sugizaki, Alan Wilner, and Tadashi Ikeuchi, "WDM Amplification of One Pump HNLF Based Phase Sensitive Amplifier with Static Pump Phase Tuning," **IEEE/OSA Conference on Optical Fiber Communications (OFC),** paper **W4F.5**, San Diego, CA, Mar. 2019 (Optical Society of America, Washington, D.C., 2019).

119. Runzhou Zhang, Hao Song, Zhe Zhao, Haoqian Song, Jing Du, Cong Liu, Kai Pang, Long Li, Ari Willner, Robert Boyd, Moshe Tur, and Alan E. Willner, "Demonstration of Independent Turbulence Mitigation of Two 100-Gbit/s QPSK Orbital-Angular-Momentum Multiplexed Beams using Wavefront Shaping and Controlled Scattering," **IEEE/OSA Conference on Optical Fiber Communications (OFC),** paper **W4A.4**, San Diego, CA, Mar. 2019 (Optical Society of America, Washington, D.C., 2019).

120. Ahmad Fallahpour, Fatemeh Alishahi, Kaiheng Zou, Yinwen Cao, Ahmed Almaiman, Arne Kordts, Maxim Karpov, Martin Pfeiffer, Karapet Manukyan, Huibin Zhou, Peicheng Liao, Moshe Tur, Tobias Kippenberg, and Alan E. Willner, "Demonstration of Tunable and Reconfigurable Optical Nyquist Channel Aggregation of QPSK-to-16QAM and BPSK-to-4PAM Using Nonlinear Wave Mixing and a Kerr Frequency Comb," **IEEE/OSA Conference on Optical Fiber Communications (OFC),** paper **W4F.2**, San Diego, CA, Mar. 2019 (Optical Society of America, Washington, D.C., 2019).

**** Selected by the subcommittee as a "Top-Scored Papers" (5% of the submissions). ****

121. Haoqian Song, Long Li, Kai Pang, Runzhou Zhang, Kaiheng Zou, Zhe Zhao, Jing Du, Hao song, Cong Liu, Yinwen Cao, Ari Willner, Robert Bock, Brittany Lynn, Moshe Tur, and Alan E. Willner, "Demonstration of Enhanced Tolerance to Turbulence and Misalignment of a 10-Gbit/s QPSK Free-Space Optical Link by Utilizing Two Aperture Pairs Combined With Detecting Multiple Modes," **IEEE/OSA Conference on Optical Fiber Communications (OFC),** paper **Th2A.41**, San Diego, CA, Mar. 2019 (Optical Society of America, Washington, D.C., 2019).

122. Ari N. Willner, Peicheng Liao, Kaiheng Zou, Yinwen Cao, Arne Kordts, Maxim Karpov, Martin H. P. Pfeiffer, Ahmed Almaiman, Fatemeh Alishahi, Ahmad Fallahpour, Moshe Tur, Tobias J. Kippenberg, and Alan E. Willner, "Scalable and Reconfigurable Optical Tap-Delay-Line for Multichannel Equalization and Correlation of 20 Gbaud QPSK signals Using Nonlinear Wave Mixing and a Microresonator Kerr Frequency Comb," **IEEE Photonics Conference (IPC),** ***Postdeadline Paper***, paper PDP6, Reston, VA, Oct. 2018 (IEEE, Piscataway, NJ, 2018).

123. Long Li, Runzhou Zhang, Peicheng Liao, Yinwen Cao, Haoqian Song, Yifan Zhao, Jing Du, Zhe Zhao, Cong Liu, Kai Pang, Hao Song, Dmitry Starodubov, Brittany Lynn, Robert Bock, Moshe Tur, Andreas F Molisch, and Alan E Willner, "MIMO Equalization to Mitigate Turbulence in a 2-Channel 40-Gbit/s QPSK Free-Space Optical 100-m Round-Trip Orbital-Angular-Momentum-Multiplexed Link Between a Ground Station and a Retro-Reflecting UAV," **European Conference on Optical Communications (ECOC)**, paper **Th2.33**, Roma, Italy, Sept. 2018.

124. Harshil Dave, Peicheng Liao, Stewart TM Fryslie, Zihe Gao, Bradley J. Thompson, Alan E. Willner, and Kent D. Choquette, "Enhanced Digital Modulation of Coherent Photonic Crystal VCSEL Arrays," **IEEE International Semiconductor Laser Conference (ISLC)**, Santa Fe, NM, Sept. 2018.

125. Youichi Akasaka, Haoqian Song, Yinwen Cao, Fatemeh Alishahi, Alan E. Willner, and Tadashi Ikeuchi, "PSA Design, Counting Longitudinal Chromatic Dispersion Fluctuation in Highly Nonlinear Fiber," **OptoElectronics and Communications Conference (OECC)**, paper **SC3_1027**, Jeju, Korea, July 2018.

REFEREED CONFERENCE PROCEEDINGS: (CONTINUED)

126. Peicheng Liao, Kaiheng Zou, Changjing Bao, Arne Kordts, Maxim Karpov, Martin Hubert Peter Pfeiffer, Lin Zhang, Yinwen Cao, Ahmed Almaiman, Fatemeh Alishahi, Amirhossein Mohajerin-Ariaei, Ahmad Fallahpour, Moshe Tur, Tobias J. Kippenberg, and Alan E. Willner, "Chip-Scale Dual-Comb Source using a Breathing Soliton for an Increased Resolution," **APS/IEEE/OSA Conference on Lasers and Electro-Optics (CLEO)**, **Postdeadline Paper**, paper **JTh5A.4**, San Jose, CA, May 2018 (OSA, Wash., D.C., 2018).

127. Cong Liu, Kai Pang, Jiapeng Zhao, Long Li, Yifan Zhao, Jing Du, Yongxiong Ren, Guodong Xie, Zhe Zhao, Haoqian Song, Hao Song, Runzhou Zhang, Yinwen Cao, Seyed Rafsanjani, Robert Boyd, Moshe Tur, Jeffrey Shapiro, and Alan E. Willner, "Demonstration of Single-End Adaptive Optics Compensation for Emulated Turbulence in a Bi-directional 10-Mbits/s per Channel Free-Space Quantum Communication Link Using Orbital-Angular-Momentum Encoding," **APS/IEEE/OSA Conference on Lasers and Electro-Optics (CLEO)**, **Postdeadline Paper**, paper **JTh5B.2**, San Jose, CA, May 2018 (OSA, Wash., D.C., 2018).

128. Fatemeh Alishahi, Peicheng Liao, Amirhossein Mohajerin Ariaei, Ahmad Fallahpour, Ahmed Almaiman, Yinwen Cao, Arne Kordts, Maxim Karpov, Martin Pfeiffer, Tobias J. Kippenberg, and Alan E. Willner, "Tunable Insertion of Uniform-Amplitude Multiple Coherent Lines into a Kerr Frequency Comb Using Nyquist Pulse Generation," **APS/IEEE/OSA Conference on Lasers and Electro-Optics (CLEO)**, paper **SM1D.2**, San Jose, CA, May 2018 (OSA, Wash., D.C., 2018).

129. Kai Pang, Cong Liu, Guodong Xie, Yongxiong Ren, Zhe Zhao, Runzhou Zhang, Yinwen Cao, Jiapeng Zhao, Long Li, Haoqian Song, Hao Song, Moshe Tur, Robert Boyd, and Alan E. Willner, "Experimental Demonstration of a 10-Mbit/s Quantum Link using Data Encoding on Orthogonal Laguerre-Gaussian Modes," **APS/IEEE/OSA Conference on Lasers and Electro-Optics (CLEO)**, paper **FTu3G.4**, San Jose, CA, May 2018 (OSA, Wash., D.C., 2018).

130. Cong Liu, Kai Pang, Yongxiong Ren, Jiapeng Zhao, Guodong Xie, Yinwen Cao, Hao Song, Zhe Zhao, Haoqian Song, Long Li, Runzhou Zhang, Jing Du, Seyed Rafsanjani, Guillaume Labroille, Pu Jian, Dmitry Starodubov, Robert Boyd, Moshe Tur, and Alan E. Willner, "Demonstration of Adaptive Optics Compensation for Emulated Atmospheric Turbulence in a Two-Orbital-Angular-Momentum Encoded Free-Space Quantum Link at 10 Mbits/s," **APS/IEEE/OSA Conference on Lasers and Electro-Optics (CLEO)**, paper **FW4F.5**, San Jose, CA, May 2018 (OSA, Wash., D.C., 2018).

131. Cong Liu, Kai Pang, Guodong Xie, Jiapeng Zhao, Yongxiong Ren, Haoqian Song, Zhe Zhao, Long Li, Runzhou Zhang, Jing Du, Seyed Rafsanjani, Guillaume Labroille, Pu Jian, Robert Boyd, Moshe Tur, and Alan E. Willner, "Experimental Demonstration of a 20-Mbit/s per Channel Free-Space Bi-directional Quantum Communication Link Using Orbital-Angular-Momentum Encoding and Multi-Port Mode Converters," **APS/IEEE/OSA Conference on Lasers and Electro-Optics (CLEO)**, paper **JTh2A.15**, San Jose, CA, May 2018 (OSA, Wash., D.C., 2018).

132. Yinwen Cao, Kaiheng Zou, Ahmed Almaiman, Amirhossein Mohajerin Ariaei, Changjing Bao, Peicheng Liao, Fatemeh Alishahi, Ahmad Fallahpour, and Alan E. Willner, "Enhancing the Performance of an Optical High-Order QAM Communication Channel by Adding Correlated Data to Robust Neighboring Channels in a Heterogeneous Network," **APS/IEEE/OSA Conference on Lasers and Electro-Optics (CLEO)**, paper **JTu2A.53**, San Jose, CA, May 2018 (OSA, Wash., D.C., 2018).

133. Ahmed Almaiman, Yinwen Cao, Amirhossein Mohajerin Ariaei, Fatemeh Alishahi, Ahmad Fallahpour, Dmitry Starodubov, Kaiheng Zou, Peicheng Liao, Changjing Bao, Shlomo Zach, Nadav Cohen, Moshe Tur, and Alan E. Willner, "Fine and Coarse Tunability over a Continuous 8.1-ns Delay Range with Access to Multiple Possible Delays using a Frequency Comb," **APS/IEEE/OSA Conference on Lasers and Electro-Optics (CLEO)**, paper **JTu2A.49**, San Jose, CA, May 2018 (OSA, Wash., D.C., 2018).

REFEREED CONFERENCE PROCEEDINGS: (CONTINUED)

134. Peicheng Liao, Changjing Bao, Kaiheng Zou, Arne Kordts, Lin Zhang, Maxim Karpov, Martin Hubert Peter Pfeiffer, Ahmed Almaiman, Yinwen Cao, Fatemeh Alishahi, Amirhossein Mohajerin-Ariaei, Ahmad Fallahpour, Moshe Tur, Tobias J. Kippenberg, and Alan E. Willner, "Generation of Multiple Side Lines around Kerr Comb Lines by a Second Pump Coupled into the Soliton Resonance," **APS/IEEE/OSA Conference on Lasers and Electro-Optics (CLEO)**, paper **SW3A.5**, San Jose, CA, May 2018 (OSA, Wash., D.C., 2018).

135. Harshil Dave, Peicheng Liao, Stewart T. M. Fryslie, Zihe Gao, Bradley J. Thompson, Alan E. Willner, and Kent D. Choquette, "36 Gb/s Error Free Modulation of 850nm Monolithic Injection Locked VCSEL Arrays," **APS/IEEE/OSA Conference on Lasers and Electro-Optics (CLEO)**, paper **STu3Q.4**, San Jose, CA, May 2018 (OSA, Wash., D.C., 2018).

136. Yiyu Zhou, Mohammad Mirhosseini, Dongzhi Fu, Jiapeng Zhao, Seyed Mohammad Hashemi Rafsanjani, Alan Willner, and Robert Boyd, "Sorting Laguerre-Gaussian Modes by Radial Quantum Number," **APS/IEEE/OSA Conference on Lasers and Electro-Optics (CLEO)**, paper **JTh2A.4**, San Jose, CA, May 2018 (OSA, Wash., D.C., 2018).

137. Jiapeng Zhao, Mohammad Mirhosseini, Yiyu Zhou, Seyed Mohammad Hashemi Rafsanjani, Yongxiong Ren, Nicholas K. Steinhoff, Glen A. Tyler, Alan E. Willner, and Robert W. Boyd, "Performance Analysis of d-Dimensional Quantum Cryptography with Mode-Dependent Diffraction," **APS/IEEE/OSA Conference on Lasers and Electro-Optics (CLEO)**, paper **JTh2A.19**, San Jose, CA, May 2018 (OSA, Wash., D.C., 2018).

138. Runzhou Zhang, Long Li, Zhe Zhao, Guodong Xie, Peicheng Liao, Hao Song, Cong Liu, Haoqian Song, Kai Pang, Robert Bock, Moshe Tur, and Alan E Willner, "Experimental Effect of Scattering on an 80-Gbit/s QPSK Wireless Link using 4 Orbital-Angular-Momentum Beams," **IEEE/OSA Conference on Optical Fiber Communications (OFC),** paper **Tu2I.5**, San Diego, CA, Mar. 2018 (Optical Society of America, Washington, D.C., 2018).

139. Amirhossein Mohajerin Ariaei, Fatemeh Alishahi, Ahmad Fallahpour, Yinwen Cao, Ahmed Almaiman, Changjing Bao, Peicheng Liao, Bishara Shamee, Joseph Touch, Moshe Tur, Carsten Langrock, Martin Fejer, and Alan E Willner, "Optical Mitigation of Inter-Channel Crosstalk for Multiple Spectrally Overlapped 40-Gbit/s QPSK WDM Channels using Nonlinear Wave Mixing," **IEEE/OSA Conference on Optical Fiber Communications (OFC),** paper **W3E.1**, San Diego, CA, Mar. 2018 (Optical Society of America, Washington, D.C., 2018).

**** Selected by the subcommittee as a "Top-Scored Papers" (5% of the submissions). ****

140. Long Li, Runzhou Zhang, Peicheng Liao, Hao Song, Kaiheng Zou, Guodong Xie, Zhe Zhao, Cong Liu, Haoqian Song, Kai Pang, Guillaume Labroille, Pu Jian, Dmitry Starodubov, Brittany Lynn, Robert Bock, Moshe Tur, and Alan E Willner, "Effect of Limited Aperture Size on a Retro-reflected Communication Link Between a Ground Station and a UAV using Multiplexing of Orbital-Angular-Momentum Beams," **IEEE/OSA Conference on Optical Fiber Communications (OFC),** paper **Tu2I.4**, San Diego, CA, Mar. 2018 (Optical Society of America, Washington, D.C., 2018).

141. Peicheng Liao, Changjing Bao, Ahmed Almaiman, Arne Kordts, Maxim Karpov, Pfeiffer Martin Hubert Peter, Lin Zhang, Fatemeh Alishahi, Yinwen Cao, Amirhossein Mohajerin Ariaei, Kaiheng Zou, Ahmad Fallahpour, Moshe Tur, Youichi Akasaka, Tobias J Kippenberg, and Alan E Willner, "Demonstration of Multiple Kerr-Frequency-Comb Generation Using Different Lines from Another Kerr Comb Located up to a 50 km Distance," **IEEE/OSA Conference on Optical Fiber Communications (OFC),** paper **Tu2J.1**, San Diego, CA, Mar. 2018 (Optical Society of America, Washington, D.C., 2018).

**** Selected by the subcommittee as a "Top-Scored Papers" (5% of the submissions). ****

REFEREED CONFERENCE PROCEEDINGS: (CONTINUED)

142. Ahmed Almaiman, Amirhossein Mohajerin Ariaei, Guodong Xie, Zhe Zhao, Fatemeh Alishahi, Yinwen Cao, Peicheng Liao, Changjing Bao, Ahmad Fallahpour, Bishara Shamee, Youichi Akasaka, Shlomo Zach, Nadav Cohen, Martin Fejer, and Alan E Willner, "Experimental Utilization of Repeated Spatial-Mode Shifting for Achieving Discrete Delays in a Free-Space Recirculating Loop," **IEEE/OSA Conference on Optical Fiber Communications (OFC),** paper **Th3H.6**, San Diego, CA, Mar. 2018 (Optical Society of America, Washington, D.C., 2018).

143. Ahmad Fallahpour, Amirhossein Mohajerin Ariaei, Ahmed Almaiman, Yinwen Cao, Fatemeh Alishahi, Changjing Bao, Peicheng Liao, Bishara Shamee, Morteza Ziyadi, Dmitry Starodubov, Moshe Tur, Carsten Langrock, Martin Fejer, Joseph Touch, and Alan E Willner, "Demonstration of 30Gbit/s QPSK-to-PAM4 Data-Format and Wavelength Conversion to Enable All-Optical Gateway from Long-haul to Datacenter," **IEEE/OSA Conference on Optical Fiber Communications (OFC),** paper **W2A.22**, San Diego, CA, Mar. 2018 (Optical Society of America, Washington, D.C., 2018).

144. Ahmed Almaiman, Yinwen Cao, Amirhossein Mohajerin Ariaei, Fatemeh Alishahi, Ahmad Fallahpour, Peicheng Liao, Changjing Bao, Shlomo Zach, Nadav Cohen, Martin Fejer, and Alan E Willner, "Coarse and Fine Continuously Tunable Optical Delay Using the Time of Flight in Fiber Bragg Gratings and Wavelength Conversion," **IEEE/OSA Conference on Optical Fiber Communications (OFC),** paper **W2A.34**, San Diego, CA, Mar. 2018 (Optical Society of America, Washington, D.C., 2018).

145. Zhe Zhao, Guodong Xie, Long Li, Haoqian Song, Cong Liu, Kai Pang, Runzhou Zhang, Changjing Bao, Zhe Wang, Soji Sajuyigbe, Shilpa Talwar, Hosein Nikopour, and Alan E. Willner, "Performance of Using Antenna Arrays to Generate and Receive mm-Wave Orbital-Angular-Momentum Beams," **IEEE Globecom 2017**, paper **1570359385**, Singapore, Dec. 2017 (IEEE, Piscataway, NJ, 2017).

146. Yinwen Cao, Fatemeh Alishahi, Youichi Akasaka, Morteza Ziyadi, Ahmed Almainman, Amirhossein Mohajerin-Ariaei, Changjing Bao, Peicheng Liao, Ahmad Fallahpour, Bishara Shamee, Tadashi Ikeuchi, Shigehiro Takasaka, Ryuichi Sugizaki, Joe Touch, Moshe Tur, Alan E Willner, "Experimental Investigation on the Effect of Central Wavelength Tuning of FBG-Based Phase Shifter for Raman-Assisted Phase Sensitive Amplifier," **European Conference on Optical Communications (ECOC)**, paper **W.3.B.2**, Gothenburg, Sweden, Sept. 2017.

147. Cong Liu, Yongxiong Ren, Jiapeng Zhao, Seyed M Rafsanjani, Guodong Xie, Kai Pang, Haoqian Song, Zhe Zhao, Zhe Wang, Long Li, Joshua Bienfang, Alan Migdall, Moshe Tur, Robert Boyd, and Alan E Willner, "Reduced Effect of Single-Photon-Detector Deadtime Using a Switchable Detector Array in an Orbital-Angular-Momentum (OAM) Encoded Quantum System," **APS/IEEE/OSA Conference on Lasers and Electro-Optics (CLEO)**, paper **FF1E. 4**, San Jose, CA, May 2017 (OSA, Wash., D.C., 2017).

148. Ahmad Fallahpour, Morteza Ziyadi, Amirhossein Mohajerin-Ariaei, Arne Kordts, Maxim Karpov, Martin Pfeiffer, Changjing Bao, Peicheng Liao, Yinwen Cao, Ahmed Almaiman, Fatemeh Alishahi, Bishara Shamee, Loukas Paraschis, Moshe Tur, Carsten Langrock, Martin M Fejer, Joe Touch, Tobias J Kippenberg, and Alan E Willner, "Experimental Generation of a 64-QAM by Optically Aggregating Three Independent QPSK Channels using Nonlinear Wave Mixing of Multiple Kerr Comb Lines," **APS/IEEE/OSA Conference on Lasers and Electro-Optics (CLEO)**, paper **JW2A. 59**, San Jose, CA, May 2017 (OSA, Wash., D.C., 2017).

149. Guodong Xie, Haoqian Song, Zhe Zhao, Yongxiong Ren, Cong Liu, Runzhou Zhang, Long Li, Zhe Wang, Kai Pang, Moshe Tur, and Alan E Willner, "Experimental Demonstration of Using Orbital Angular Momentum Based Spatial Spectrum Analysis for Object Parameter Estimation," **APS/IEEE/OSA Conference on Lasers and Electro-Optics (CLEO)**, paper **JW2A. 76**, San Jose, CA, May 2017 (OSA, Wash., D.C., 2017).

REFEREED CONFERENCE PROCEEDINGS: (CONTINUED)

150. Fatemeh Alishahi, Amirhossein Mohajerin-Ariaei, Ahmed Almaiman, Morteza Ziyadi, Yinwen Cao, Peicheng Liao, Ahmad Fallahpour, Changjing Bao, Bishara Shamee, Shlomo Zach, Nadav Cohen, Moshe Tur, and Alan Willner, "Analog and Digital Performance of Multiple Discrete Time Delays based on a Fiber Loop with an Internal Frequency Shifter," **APS/IEEE/OSA Conference on Lasers and Electro-Optics (CLEO)**, paper **JTh2A. 61**, San Jose, CA, May 2017 (OSA, Wash., D.C., 2017).

151. Changjing Bao, Peicheng Liao, Arne Kordts, Lin Zhang, Maxim Karpov, Martin Hubert Peter Pfeiffer, Andrey Matsko, Guodong Xie, Yinwen Cao, Yan Yan, Ahmed Almaiman, Morteza Ziyadi, Amirhossein Mohajerin-Ariaei, Ahmad Fallahpour, Fatemeh Alishahi, Moshe Tur, Lute Maleki, Tobias Kippenberg, and Alan Willner, "Experimental Demonstration of Dual-Comb Generation by XPM Between Two Polarization States in a Microresonator," **APS/IEEE/OSA Conference on Lasers and Electro-Optics (CLEO)**, paper **SW4N.1**, San Jose, CA, May 2017 (OSA, Wash., D.C., 2017).

152. Long Li, Runzhou Zhang, Guodong Xie, Yongxiong Ren, Zhe Zhao, Zhe Wang, Cong Liu, Haoqian Song, Kai Pang, Robert Bock, Moshe Tur, and Alan E Willner, "Experimental Beam Displacement Tracking and Correction of Data-Carrying Orbital-Angular-Momentum Beams in a Free-Space Optical Link," **IEEE/OSA Conference on Optical Fiber Communications (OFC),** paper Tu2F.6, Los Angeles, CA, Mar. 2017 (Optical Society of America, Washington, D.C., 2017).

153. Ahmad Fallahpour, Morteza Ziyadi, Amirhossein Mohajerin Ariaei, Yinwen Cao, Ahmed Almaiman, Fatemeh Alishahi, Changjing Bao, Peicheng Liao, Bishara Shamee, Loukas Paraschis, Moshe Tur, Carsten Langrock, Martin Fejer, Joseph Touch, and Alan E Willner, "Experimental Demonstration of Tunable Optical De-aggregation of Each of Multiple Wavelength 16-QAM Channels into Two 4-PAM Channels," **IEEE/OSA Conference on Optical Fiber Communications (OFC),** paper Th4I.6, Los Angeles, CA, Mar. 2017 (Optical Society of America, Washington, D.C., 2017).

154. Yinwen Cao, Ahmed Almaiman, Youichi Akasaka, Fatemeh Alishahi, Morteza Ziyadi, Amirhossein Mohajerin Ariaei, Changjing Bao, Peicheng Liao, Ahmad Fallahpour, Bishara Shamee, Tadashi Ikeuchi, Shigehiro Takasaka, Ryuichi Sugizaki, Joseph Touch, Moshe Tur, and Alan E Willner, "Experimental Demonstration of Raman-Assisted Phase Sensitive Amplifier with Reduced ASE Noise Level and More than 25dB Net Gain," **IEEE/OSA Conference on Optical Fiber Communications (OFC),** paper Th4A.2, Los Angeles, CA, Mar. 2017 (Optical Society of America, Washington, D.C., 2017).

155. Yinwen Cao, Ahmed Almaiman, Morteza Ziyadi, Amirhossein Mohajerin Ariaei, Changjing Bao, Peicheng Liao, Fatemeh Alishahi, Ahmad Fallahpour, Youichi Akasaka, Carsten Langrock, Martin Fejer, Joseph Touch, Moshe Tur, and Alan E Willner, "Experimental Demonstration of Tunable Optical Channel Slicing and Stitching to Enable Dynamic Bandwidth Allocation," **IEEE/OSA Conference on Optical Fiber Communications (OFC),** paper Th1F.1, Los Angeles, CA, Mar. 2017 (Optical Society of America, Washington, D.C., 2017).

**** Selected by the subcommittee as a "Top-Scored Papers" (5% of the submissions). ****

156. Peicheng Liao, Changjing Bao, Arne Kordts, Karpov Maxim, Pfeiffer Martin Hubert Peter, Lin Zhang, Yinwen Cao, Ahmed Almaiman, Morteza Ziyadi, Amirhossein Mohajerin Ariaei, Fatemeh Alishahi, Ahmad Fallahpour, Moshe Tur, Tobias J Kippenberg, and Alan E Willner, "Experimental Investigation of the Effect of EDFA-Generated ASE Noise added to the Pump of a Kerr Frequency Comb," **IEEE/OSA Conference on Optical Fiber Communications (OFC),** paper M3F.1, Los Angeles, CA, Mar. 2017 (Optical Society of America, Washington, D.C., 2017).

157. Amirhossein Mohajerin Ariaei, Morteza Ziyadi, Yinwen Cao, Ahmed Almaima n, Fatemeh Alishahi, Ahmad Fallahpour, Changjing Bao, Peicheng Liao, Bishara Shamee, Joseph Touch, Moshe Tur, Carsten Langrock, Martin Fejer, and Alan E Willner, "Demonstration of Tunable Mitigation of Interchannel Interference of

REFEREED CONFERENCE PROCEEDINGS: (CONTINUED)

Spectrally Overlapped 16-QAM/QPSK Data Channels using Wave Mixing of Delayed Copies," **IEEE/OSA Conference on Optical Fiber Communications (OFC),** paper Th3J.5, Los Angeles, CA, Mar. 2017 (Optical Society of America, Washington, D.C., 2017).

158. Haohan Yao, Harini Kumar, Thethnin Ei, Shilpi Sharma, Rashaunda Henderson, Solyman Ashrafi, Duncan MacFarlane, Zhe Zhao, Yan Yan, and Alan E. Willner, "Experimental Demonstration of a Dual-channel E-band Communication Link using Commercial Impulse Radios with Orbital Angular Momentum Multiplexing", **Radio & Wireless Week**, paper 213-KK82, Phoenix, AZ, Jan. 2017.

159. Yan Yan, Long Li, Guodong Xie, Morteza Ziyadi, Amirhossein M Ariaei, Yongxiong Ren, Olivier Renaudin, Zhe Zhao, Zhe Wang, Cong Liu, Soji Sajuyigbe, Shilpa Talwar, Solyman Ashrafi, Andreas F Molisch, Alan E Willner, " OFDM over mm-Wave OAM Channels in a Multipath Environment with Intersymbol Interference," **IEEE Globecom 2016**, paper 16654694, Washington, DC, Dec. 2016 (IEEE, Piscataway, NJ, 2016).

160. Joe Touch, Yinwen Cao, Morteza Ziyadi, Ahmed Almaiman, Amirhossein Mohajerinariaei, and Alan Willner, "The Optical Turing Machine", **IEEE International Conference on Rebooting Computing**, San Diego, CA, Oct. 2016.

161. Yinwen Cao, Fatemeh Alishahi, Youichi Akasaka, Morteza Ziyadi, Ahmed Almainman, Amirhossein Mohajerin-Ariaei, Changjing Bao, Peicheng Liao, Ahmad Fallahpour, Bishara Shamee, Tadashi Ikeuchi, Shigehiro Takasaka, Ryuichi Sugizaki, Joe Touch, Moshe Tur, Alan E Willner, "Experimental Investigation of Quasi-Periodic Power Spectrum in Raman-Assisted Phase Sensitive Amplifier for 10/20/50-Gbaud QPSK and 10-Gbaud 16QAM," **European Conference on Optical Communications (ECOC)**, paper Th.2.P2.SC5.51, Düsseldorf, German, Sept. 2016.

162. Peicheng Liao, Changjing Bao, Arne Kordts, Karpov Maxim, PMH Peter, Lin Zhang, Amirhossein Mohajerin-Ariaei, Yinwen Cao, Ahmed Almaiman, Morteza Ziyadi, Youichi Akasaka, Tomer Yeminy, Steven R Wilkinson, Moshe Tur, Tobias J Kippenberg, Alan E Willner, "Dependence of Kerr Comb Linewidth and Coherent System Performance on the Pump Linewidth," **European Conference on Optical Communications (ECOC)**, paper Th2.P2.SC1.5, Düsseldorf, German, Sept. 2016.

163. Ahmed Almainman, Yinwen Cao, Morteza Ziyadi, Amirhossein Mohajerin-Ariaei, Peicheng Liao, Changjing Bao, Fatemeh Alishahi, Ahmad Fallahpour, Bishara Shamee, Joe Touch, Youichi Akasaka, Tadashi Ikeuchi, Steven Wilkinson, Moshe Tur, Alan Willner, "Experimental Demonstration of Phase-Sensitive Regeneration of a 20-40 Gb/s QPSK Channel without Phase-Locked Loop using Brillouin Amplification," **European Conference on Optical Communications (ECOC)**, paper W.3.C.4, Düsseldorf, German, Sept. 2016.

164. Y. Cao, F Alishahi, Y Akasaka, M Ziyadi, A Mohajerin-Ariaei, A Almaiman, T Ikeuchi, S Takasaka, R Sugizaki, AE Willner, "Phase adjustment by wavelength tuning of parametric pump on Raman assisted phase sensitive amplifier," **OptoElectronics and Communications Conference (OECC)**, Paper TuC3-3, Niigata City, Japan, July 2016.

165. Y. Ren, L. Li, G. Xie, and A. Willner, "Channel effects and mitigation approaches in free-space and underwater optical communications using orbital angular momentum multiplexing," **Asia Communications and Photonics Conference 2016**, paper AF4H.1, Wuhan, China, Nov. 2016 (Optical Society of America, 2016).

166. Peicheng Liao, Changjing Bao, Arne Kordts, Maxim Karpov, Martin Hubert Peter Pfeiffer, Lin Zhang, Yinwen Cao, Ahmed Almaiman, Amirhossein Mohajerin-Ariaei, Morteza Ziyadi, Tobias Kippenberg and Alan Willner, "Pump-Phase-Noise Tolerant Wavelength Multicasting for Coherent Communications using Kerr Frequency Combs," **Frontiers in Optics (FiO) 2016**, paper FTh4E.3, Rochester, NY, Oct. 2016 (Optical Society of America, 2016).

REFEREED CONFERENCE PROCEEDINGS: (CONTINUED)

167. Changjing Bao, Peicheng Liao, Yinwen Cao, Guodong Xie, Arne Kordts, Lin Zhang, Maxim Karpov, Martin Hubert Peter Pfeiffer, Cong Liu, Morteza Ziyadi, Yan Yan, Ahmed Almaiman, Amirhossein Mohajerin-Ariaei, Fatemeh Alishahi, Tobias Kippenberg, and Alan Willner, "Experimental Demonstration of Inserting Phase-Locked Lines into Kerr Combs using Electro-Optical Modulation," **Frontiers in Optics (FiO) 2016**, paper **FTh5G.2**, Rochester, NY, Oct. 2016 (Optical Society of America, 2016).

168. Yan Yan, Long Li, Zhe Zhao, Guodong Xie, Yongxiong Ren, Nisar Ahmed, Zhe Wang, Soji Sajuyigbe, Shilpa Talwar, Moshe Tur, Solyman Ashrafi, Andreas F. Molisch, and Alan E. Willner, "32 Gbit/s 60 GHz Millimeter-Wave Wireless Communications using Orbital-Angular-Momentum and Polarization Mulitplexing," **IEEE International Communication Conference (ICC) 2016**, paper 1570226040, Kuala Lumpur, Malaysia, May 2016 (IEEE, Piscataway, NJ, 2016).

169. Guodong Xie, Yan Yan, Zhe Zhao, Long Li, Yongxiong Ren, Nisar Ahmed, Asher J. Willner, Changjing Bao, Zhe Wang, Cong Liu, Nima Ashrafi, Solyman Ashrafi, Shilpa Talwar, Soji Sajuyigbe, Moshe Tur, Andreas F. Molisch, and Alan E. Willner, "Tunable Generation and Angular Steering of a Millimeter-Wave Orbital-Angular-Momentum Beam using Differential Time Delays in a Circular Antenna Array," **IEEE International Communication Conference (ICC) 2016**, paper 1570225424, Kuala Lumpur, Malaysia, May 2016 (IEEE, Piscataway, NJ, 2016).

170. Zhe Zhao, Yan Yan, Long Li, Guodong Xie, Yongxiong Ren, Nisar Ahmed, Zhe Wang, Cong Liu, Asher J. Willner, Pingyue Song, Hossein Hashemi, Haohan Yao, Duncan Macfarlane, Rashaunda Henderson, Nima Ashrafi, Solyman Ashrafi, Shilpa Talwar, Soji Sajuyigbe, Moshe Tur, Andreas. F. Molisch, and Alan E. Willner, "A Dual-Channel 60 GHz Communications Link Using Patch Antenna Arrays to Generate Data-Carrying Orbital-Angular-Momentum Beams," **IEEE International Communication Conference (ICC) 2016**, paper 1570224643, Kuala Lumpur, Malaysia, May 2016 (IEEE, Piscataway, NJ, 2016).

171. Changjing Bao, Peicheng Liao, Martin Hubert Peter Pfeiffer, Lin Zhang, Maxim Karpov, Arne Kordts, Yinwen Cao, Yan Yan, Ahmed Almaiman, Guodong Xie, Amirhossein Mohajerin Ariaei, Long Li, Morteza Ziyadi, Steven Wilkinson, Moshe Tur, Tobias Kippenberg, and Alan Willner, "Experimental Generation of High-Coherence Sub-Prime Comb Lines with Multiple Sub-Lines in a Kerr Frequency Comb using Dual Pumps," **APS/IEEE/OSA Conference on Lasers and Electro-Optics (CLEO)**, paper SW4E.8, San Jose, CA, June 2016 (OSA, Wash., D.C., 2016).

172. Changjing Bao, Peicheng Liao, Martin Hubert Peter Pfeiffer, Lin Zhang, Maxim Karpov, Arne Kordts, Yinwen Cao, Yan Yan, Ahmed Almaiman, Guodong Xie, Amirhossein Mohajerin Ariaei, Long Li, Morteza Ziyadi, Steven Wilkinson, Moshe Tur, Tobias Kippenberg, and Alan Willner, "Experimental Demonstration of 7-fold Multicasting of a 20-Gbaud QPSK Signal using Kerr Frequency Combs," **APS/IEEE/OSA Conference on Lasers and Electro-Optics (CLEO)**, paper SM3F.6, San Jose, CA, June 2016 (OSA, Wash., D.C., 2016).

173. Ahmed Almaiman, Amirhossein Mohajerin Ariaei, Morteza Ziyadi, Yinwen Cao, Peicheng Liao, Changjing Bao, FATEMEH ALISHAHI, Ahmad Fallahpour, Bishara Shamee, Nisar Ahmed, Carsten Langrock, Martin Fejer, Shlomo Zach, Nadav Cohen, Moshe Tur, and Alan Willner, "Spurious-Free Dynamic Range Characterization of a $\chi 2$-Based PPLN Waveguide," **APS/IEEE/OSA Conference on Lasers and Electro-Optics (CLEO)**, paper SF1G.5, San Jose, CA, June 2016 (OSA, Wash., D.C., 2016).

174. Amirhossein Mohajerin Ariaei, Ahmed Almaiman, Morteza Ziyadi, Yinwen Cao, Ahmad Fallahpour, Changjing Bao, FATEMEH ALISHAHI, Peicheng Liao, Bishara Shamee, Youichi Akasaka, Tadashi Ikeuchi, Shlomo Zach, Nadav Cohen, Moshe Tur, and Alan Willner, "Analog Performance of Multiple, Discretely Tunable Time Delays based on a Frequency Comb and a Chromatic Dispersion Element," **APS/IEEE/OSA Conference on Lasers and Electro-Optics (CLEO)**, paper SF1G.3, San Jose, CA, June 2016 (OSA, Wash., D.C., 2016).

REFEREED CONFERENCE PROCEEDINGS: (CONTINUED)

175. Amirhossein Mohajerin Ariaei, Morteza Ziyadi, Ahmed Almaiman, Yinwen Cao, Changjing Bao, Peicheng Liao, Bishara Shamee, FATEMEH ALISHAHI, Ahmad Fallahpour, Mohammad Reza chitgarha, Asher Willner, Youichi Akasaka, Tadashi Ikeuchi, Steven Wilkinson, Joseph Touch, Moshe Tur, Carsten Langrock, Martin Fejer, and Alan Willner, "Demonstration of Multiplexing and Transmission of QPSK-to-16QAM Channels over 100 km using Wave Mixing for Aggregation and Noise Mitigation," **APS/IEEE/OSA Conference on Lasers and Electro-Optics (CLEO)**, paper JTh2A.127, San Jose, CA, June 2016 (OSA, Wash., D.C., 2016).

176. Fatemeh Alishahi, Yinwen Cao, Morteza Ziyadi, Amirhossein Mohajerin Ariaei, Ahmad Fallahpour, Ahmed Almaiman, Changjing Bao, Peicheng Liao, Asher Willner, Bishara Shamee, Youichi Akasaka, Alan Willner, Tadashi Ikeuchi, Joseph Touch, Moshe Tur, Shigehiro Takasaka, and Ryuichi Sugizaki, "Tunable All-Optical WDM Channel Selection using Raman-Assisted-Cascaded Parametric Amplification," **APS/IEEE/OSA Conference on Lasers and Electro-Optics (CLEO)**, paper JTh2A.125, San Jose, CA, June 2016 (OSA, Wash., D.C., 2016).

177. Guodong Xie, Cong Liu, Long Li, Yongxiong Ren, Zhe Zhao, Yan Yan, Nisar Ahmed, Zhe Wang, Asher Willner, Changjing Bao, Yinwen Cao, Moshe Tur, and Alan Willner, "Experimental Demonstration of Localized Energy Density Gain using Coherent Superposition of Multiple Structured Orbital-Angular-Momentum Modes," **APS/IEEE/OSA Conference on Lasers and Electro-Optics (CLEO)**, paper STu1M.4, San Jose, CA, June 2016 (OSA, Wash., D.C., 2016).

178. Zhe Wang, Yan Yan, Amir Arbabi, Cong Liu, Guodong Xie, Zhe Zhao, Yongxiong Ren, Long Li, Nisar Ahmed, Asher Willner, Ehsan Arbabi, Andrei Faraon, Nima Ashrafi, Solyman Ashrafi, Moshe Tur, and Alan Willner, "Demonstration of using Passive Integrated Phase Masks to Generate Orbital-Angular-Momentum Beams in a Communications Link," **APS/IEEE/OSA Conference on Lasers and Electro-Optics (CLEO)**, paper SW4F.5, San Jose, CA, June 2016 (OSA, Wash., D.C., 2016).

179. Long Li, Yongxiong Ren, Yinwen Cao, Guodong Xie, Zhe Zhao, Zhe Wang, Cong Liu, Yan Yan, Nisar Ahmed, Asher Willner, Nima Ashrafi, Solyman Ashrafi, Moshe Tur, and Alan Willner, "CMA Equalization for a 2 Gb/s Orbital Angular Momentum Multiplexed Optical Underwater Link through Thermally Induced Refractive Index Inhomogeneity," **APS/IEEE/OSA Conference on Lasers and Electro-Optics (CLEO)**, paper SW1F.2, San Jose, CA, June 2016 (OSA, Wash., D.C., 2016).

180. Yinwen Cao, Morteza Ziyadi, Amirhossein Mohajerin Ariaei, Ahmed Almaiman, FATEMEH ALISHAHI, Changjing Bao, Peicheng Liao, Ahmad Fallahpour, Bishara Shamee, Carsten Langrock, Martin Fejer, Moshe Tur, and Alan Willner, "Inter-channel Interference Mitigation of Heterogeneous Wavelength-Overlapped Channels of Different Baud Rates and Pulse Shapes using Nonlinear Optical Signal Processing," **APS/IEEE/OSA Conference on Lasers and Electro-Optics (CLEO)**, paper STu1G.6, San Jose, CA, June 2016 (OSA, Wash., D.C., 2016).

181. Morteza Ziyadi, Amirhossein Mohajerin Ariaei, Yinwen Cao, Ahmed Almaiman, Ahmad Fallahpour, Changjing Bao, Fatemeh Alishahi, Peicheng Liao, Bishara Shamee, Loukas Paraschis, Moshe Tur, Carsten Langrock, Martin Fejer, Joseph Touch, Youichi Akasaka, Tadashi Ikeuchi, and Alan Willner, "Tunable Optical De-aggregation of a 40-Gbit/s 16-QAM Signal into Two 20-Gbit/s 4-PAM Signals using a Coherent Frequency Comb and Nonlinear Processing," **APS/IEEE/OSA Conference on Lasers and Electro-Optics (CLEO)**, paper SM3F.5, San Jose, CA, June 2016 (OSA, Wash., D.C., 2016).

182. Morteza Ziyadi, Amirhossein Mohajerin Ariaei, Yinwen Cao, Ahmed Almaiman, Changjing Bao, Fatemeh Alishahi, Ahmad Fallahpour, Peicheng Liao, Asher Willner, Bishara Shamee, Steven Wilkinson, Loukas Paraschis, Moshe Tur, Carsten Langrock, Martin Fejer, Joseph Touch, and Alan Willner, "Tunable ROADM with Crosstalk Reduction for Overlapped 20-25 Gbaud QPSK WDM Channels using Wave Mixing,"

REFEREED CONFERENCE PROCEEDINGS: (CONTINUED)

APS/IEEE/OSA Conference on Lasers and Electro-Optics (CLEO), paper SM3F.2, San Jose, CA, June 2016 (OSA, Wash., D.C., 2016).

183. Yinwen Cao, Ahmed Almaiman, Morteza Ziyadi, Peicheng Liao, Amirhossein Mohajerin-Ariaei, Fatemeh Alishah, Changjing Bao, Ahmad Fallahpour, Bishara Shamee, Asher Willner, Youichi Akasaka, Tadashi Ikeuchi, Steven Wilkinson, Joseph Touch, Moshe Tur, and Alan Willner, "Demonstration of Automatically Phase-Locked Self-Homodyne Detection with a Low-Power Pilot Tone based on Brillouin Amplification and Optical Frequency Combs," **IEEE/OSA Conference on Optical Fiber Communications (OFC),** paper M2A.6, Anaheim, CA, Mar. 2016 (Optical Society of America, Washington, D.C., 2016).

184. Ahmed Almaiman, Yinwen Cao, Morteza Ziyadi, Peicheng Liao, Amirhossein Mohajerin Ariaei, Changjing Bao, Fatemeh Alishah, Ahmad Fallahpour, Bishara Shamee, Asher Willner, Nisar Ahmed, Akasaka Youichi, Tadashi Ikeuchi, Steven Wilkinson, Moshe Tur, and Alan Willner, "Experimental Demonstration of Phase-Sensitive Regeneration of a 10-20 Gb/s BPSK Channel without a Phase-Locked Loop using Brillouin Amplification," **IEEE/OSA Conference on Optical Fiber Communications (OFC),** paper W4D.5, Anaheim, CA, Mar. 2016 (Optical Society of America, Washington, D.C., 2016).

185. Peicheng Liao, Changjing Bao, Pfeiffer Martin, Hubert Peter, Maxim Karpov, Yan Yan, Lin Zhang, Yinwen Cao, Ahmed Almaiman, Morteza Ziyadi, Asher Willner, Steven, Wilkinson, Moshe Tur, Tobias Kippenberg, and Alan Willner, "Wavelength and Pump Power Characterization of Low-phase-noise Kerr Frequency Comb Lines," **IEEE/OSA Conference on Optical Fiber Communications (OFC),** paper W4E.2, Anaheim, CA, Mar. 2016 (Optical Society of America, Washington, D.C., 2016).

186. Yongxiong Ren, Zhe Wang, Guodong Xie, Long Li, Asher Willner, Yinwen Cao, Zhe Zhao, Yan Yan, Nisar Ahmed, Nima Ashrafi, Solyman Ashrafi, Robert Bock, Moshe Tur, and Alan Willner, "Demonstration of OAM-based MIMO FSO link using spatial diversity and MIMO equalization for turbulence mitigation," **IEEE/OSA Conference on Optical Fiber Communications (OFC),** paper Th1H.2, Anaheim, CA, Mar. 2016 (Optical Society of America, Washington, D.C., 2016).

187. Youichi Akasaka, Jeng-Yuan Yang, Tadashi Ikeuchi, Motoyoshi Sekiya, Shigehiro Takasaka, Ryuichi Sugizaki, Amirhossein Mohajerin Ariaei, Morteza Ziyadi, Ahmed Almaiman, Yinwen Cao, and Alan E. Willner, "Study of Chromatic Dispersion Effect on 16QAM Phase Sensitive Amplification," **IEEE Photonics Conference (IPC),** paper WG1.1, Reston, VA, Oct. 2015 (IEEE, Piscataway, NJ, 2015).

188. Changjing Bao, Peicheng Liao, Lin Zhang, Yan Yan, Yinwen Cao, Guodong Xie, Amirhossein Mohajerin Ariaei, Long Li, Morteza Ziyadi, Lionel C. Kimerling, Jurgen Michee, and Alan E. Willner, "Impact of Breather Soliton in Kerr Combs on the Performance of Communication Systems," **IEEE Photonics Conference (IPC),** paper TuD1.2, Reston, VA, Oct. 2015 (IEEE, Piscataway, NJ, 2015).

189. Yue Yang, Lin Zhang, Changjing Bao, Alan E. Willner, and Jon Anderson, "Octave-spanning Flat Negative Dispersion in Silicon Nitride Horizontal Slot Waveguides," **IEEE Photonics Conference (IPC),** paper MD1.2, Reston, VA, Oct. 2015 (IEEE, Piscataway, NJ, 2015).

190. Zhe Zhao, Yongxiong Ren, Guodong Xie, Long Li, Yan Yan, Nisar Ahmed, Zhe Wang, Nima Ashrafi, Solyman Ashrafi, Roger Linquist, and Alan Willner, "Dividing and Multiplying the Mode Order for Orbital-Angular-Momentum Beams," **European Conference on Optical Communications (ECOC)**, paper Th.4.5.1, Valencia, Spain, Sept. 2015.

191. Yinwen Cao, Morteza Ziyadi, Amirhossein Mohajerin Ariaei, Ahmed Almaiman, Peicheng Liao, Changjing Bao, Bishara Shamee, Jeng-Yuan Yang, Youichi Akasaka, Motoyoshi Sekiya, Moshe Tur, Carsten Langrock, Martin Fejer, Joe Touch, and Alan Willner, "Reconfigurable Optical Inter-Channel Interference Compensation of 20/25-Gbaud QPSK Signals using Nonlinear Wave Mixing," **European Conference on Optical Communications (ECOC)**, paper P.3.17, Valencia, Spain, Sept. 2015.

REFEREED CONFERENCE PROCEEDINGS: (CONTINUED)

192. Guodong Xie, Long Li, Yongxiong Ren, Yan Yan, Nisar Ahmed, Zhe Zhao, Zhe Wang, Nima Ashrafi, Solyman Ashrafi, Roger Linquist, and Alan Willner, "Exploiting the Unique Intensity Gradient of an Orbital-Angular-Momentum Beam for Accurate Receiver Alignment Monitoring in a Free-Space Communication Link," **European Conference on Optical Communications (ECOC)**, paper We.3.6.2, Valencia, Spain, Sept. 2015.

193. Ahmed Almaiman, Amirhossein Mohajerin Ariaei, Morteza Ziyadi, Yinwen Cao, Changjing Bao, Peicheng Liao, Bishara Shamee, Youichi Akasaka, Jeng-Yuan Yang, Motoyoshi Sekiya, Carsten Langrock, Martin Fejer, Joe Touch, Moshe Tur, and Alan Willner, "Demonstration of a Fine and Coarse Tunable Buffer for Multiple Discrete and Simultaneous Signal Access using a Frequency Comb, Wavelength Conversion and Chromatic Dispersion," **European Conference on Optical Communications (ECOC)**, paper P.4.14, Valencia, Spain, Sept. 2015.

194. Youichi Akasaka, Jeng-Yuan Yang, Motoyoshi Sekiya, Yinwen Cao, Ahmed Almaiman, Morteza Ziyadi, Amirhossein Mohajerin-Ariaei, Peicheng Liao, Tadashi Ikeuchi, Alan Willner, Sigehiro Takasaka, and Ryuichi Sugizaki, "Experimental Demonstration of Raman-assisted Phase Sensitive Amplifier with Negligible Gain/Power Fluctuation," **European Conference on Optical Communications (ECOC)**, paper Tu.1.1.4, Valencia, Spain, Sept. 2015.

195. Jeng-Yuan Yang, Youichi Akasaka, Motoyoshi Sekiya, Amirhossein Mohajerin Ariaei, Yinwen Cao, Morteza Ziyadi, Ahmed Almaiman, and Alan Willner, "Investigation of Channel-based Independent Phase Shifts for Maximizing Phase-Sensitive Amplication on WDM Channels," **20th Opto-Electronics and Communications Conference (OECC)**, paper WE9F-4, Shanghai, China, June 2015.

196. Long Li, Guodong Xie, Yan Yan, Yongxiong Ren, Peicheng Liao, Nisar Ahmed, Zhe Zhao, Changjing Bao, Zhe Wang, Nima Ashrafi, Solyman Ashrafi, Roger D. Linquist, Moshe Tur, and Alan E. Willner, "Experimental Demonstration of a 400-Gbit/s Free Space Optical Link using Multiple Orbital-Angular-Momentum Beams with Higher Order Radial Indices," **APS/IEEE/OSA Conference on Lasers and Electro-Optics (CLEO)**, paper SW4M.5, San Jose, CA, May 2015 (OSA, Wash., D.C., 2015).

197. Morteza Ziyadi, Amirhossein Mohajerin Ariaei, Mohammad-Reza Chitgarha, Yinwen Cao, Ahmed Almaiman, Youichi Akasaka, Jeng-Yuan Yang, Guodong Xie, Peicheng Liao, Motoyoshi Sekiya, Joseph Touch, Moshe Tur, Carsten Langrock, Martin Fejer, and Alan E. Willner, "Demonstration of Tunable and Automatic Frequency/Phase Locking for Multiple-Wavelength QPSK and 16-QAM Homodyne Receivers using a Single Nonlinear Element," **APS/IEEE/OSA Conference on Lasers and Electro-Optics (CLEO)**, paper STh1O.6, San Jose, CA, May 2015 (OSA, Wash., D.C., 2015).

198. Guodong Xie, Long Li, Yan Yan, Yongxiong Ren, Zhe Zhao, Peicheng Liao, Nisar Ahmed, Zhe Wang, Nima Ashrafi, Solyman Ashrafi, Roger D. Linquist, Moshe Tur, Alan E. Willner, "Performance Metrics for a Free-space Communication Link Based on Multiplexing of Multiple Orbital Angular Momentum Beams with Higher Order Radial Indices," **APS/IEEE/OSA Conference on Lasers and Electro-Optics (CLEO)**, paper JTh2A.62, San Jose, CA, May 2015 (OSA, Wash., D.C., 2015).

199. Amirhossein Mohajerin Ariaei, Morteza Ziyadi, Ahmed Almaiman, Yinwen Cao, Mohammad-Reza Chitgarha, Youichi Akasaka, Jeng-Yuan Yang, Motoyoshi Sekiya, Joseph Touch, Moshe Tur, Carsten Langrock, Martin Fejer, Alan E. Willner, "Experimental Demonstration of Simultaneous Phase Noise Suppression and Automatically Locked Tunable Homodyne Reception for a 20-Gbaud QPSK Signal," **APS/IEEE/OSA Conference on Lasers and Electro-Optics (CLEO)**, paper SW1M.5, San Jose, CA, May 2015 (OSA, Wash., D.C., 2015).

200. Changjing Bao, Lin Zhang, Yan Yan, Andrey Matsko, Guodong Xie, Long Li, Lionel Kimerling, Jurgen Michel, Lute Maleki, and Alan E. Willner, "Impact of Higher-Order Dispersion on the Performance of a Kerr

REFEREED CONFERENCE PROCEEDINGS: (CONTINUED)

Frequency Comb as Affected by the Generated Dispersive Wave,"**APS/IEEE/OSA Conference on Lasers and Electro-Optics (CLEO)**, paper JTu5A.32, San Jose, CA, May 2015 (OSA, Wash., D.C., 2015).

201. Morteza Ziyadi, Amirhossein Mohajerin Ariaei, Ahmed Almaiman, Yinwen Cao, Mohammad-Reza Chitgarha, Peicheng Liao, Youichi Akasaka, Jeng-Yuan Yang, Motoyoshi Sekiya, Joseph Touch, Moshe Tur, Carsten Langrock, Martin Fejer, and Alan E. Willner, "Experimental Demonstration of Tunable and Automatically-Locked Homodyne Detection for Dual-Polarization 20-32-Gbaud QPSK Channels using Nonlinear Mixing and Polarization Diversity," **APS/IEEE/OSA Conference on Lasers and Electro-Optics (CLEO)**, paper STh1O.5, San Jose, CA, May 2015 (OSA, Wash., D.C., 2015).

202. Nisar Ahmed, Martin Lavery, Peicheng Liao, Guodong Xie, Hao Huang, Long Li, Yongxiong Ren, Yan Yan, Zhe Zhao, Zhe Wang, Nima Ashrafi, Solyman Ashrafi, Roger D. Linquist, Moshe Tur, and Alan E. Willner, "Demonstration of Distance Emulation for an Orbital-Angular-Momentum Beam," **APS/IEEE/OSA Conference on Lasers and Electro-Optics (CLEO)**, paper STh1F.6, San Jose, CA, May 2015 (OSA, Wash., D.C., 2015).

203. Ahmed Almaiman, Morteza Ziyadi, Amirhossein Mohajerin Ariaei, Yinwen Cao, Mohammad-Reza Chitgarha, Peicheng Liao, Youichi Akasaka, Jeng-Yuan Yang, Motoyoshi Sekiya, Joseph Touch, Carsten Langrock, Martin Fejer, Moshe Tur, and Alan E. Willner, "Experimental Demonstration of Tunable Homodyne Detection for Two Channels Simultaneously using Nonlinear Optical Signal Processing to Automatically Lock a Single 'Local' Pump Laser to Two 20-Gbaud BPSK Data Signals," **APS/IEEE/OSA Conference on Lasers and Electro-Optics (CLEO)**, paper STh1O.4 , San Jose, CA, May 2015 (OSA, Wash., D.C., 2015).

204. Guodong Xie, Long Li, Yongxiong Ren, Hao Huang, Zhe Zhao, Peicheng Liao, Ahmed Almaiman, Yinwen Cao, Yan Yan, Changjing Bao, Nisar Ahmed, Zhe Wang, Nima Ashrafi, Solyman Ashrafi, Roger D. Linquist, Moshe Tur, and Alan E. Willner, "Enhanced Spectral Efficiency of 2.36 bits/s/Hz using Multiple Layer Overlay Modulation for QPSK over a 14-km Single Mode Fiber Link," **APS/IEEE/OSA Conference on Lasers and Electro-Optics (CLEO)**, paper SW1M.6, San Jose, CA, May 2015 (OSA, Wash., D.C., 2015).

205. Guodong Xie, Changjing Bao, Yongxiong Ren, Yan Yan, Ahmed Almaiman, Long Li, Peicheng Liao, Zhe Zhao, Nisar Ahmed, Zhe Wang, Yinwen Cao, Hao Huang, Nima Ashrafi, Solyman Ashrafi, Roger D. Linquist, Moshe Tur, and Alan E. Willner, "Experimental Demonstration of using Multi-Layer-Overlay Technique for Increasing Spectral Efficiency to 1.18 bits/s/Hz in a 3 Gbit/s Signal over 4-km Multimode Fiber," **APS/IEEE/OSA Conference on Lasers and Electro-Optics (CLEO)**, paper JTh2A.63, San Jose, CA, May 2015 (OSA, Wash., D.C., 2015).

206. Martin Lavery, Bettina Heim, Christian Peuntinger, Ebrahim Karimi, Omar Magaña-Loaiza, Thomas Bauer, Christoph Marquardt, Alan Willner, Robert Boyd, Miles Padgett, and Gerd Leuchs, "Study of Turbulence Induced Orbital Angular Momentum Channel Crosstalk in a 1.6 km Free-Space Optical Link," **APS/IEEE/OSA Conference on Lasers and Electro-Optics (CLEO)**, paper STu1L.4, San Jose, CA, May 2015 (OSA, Wash., D.C., 2015).

207. Yan Yan, Long Li, Guodong Xie, Changjing Bao, Peicheng Liao, Hao Huang, Yongxiong Ren, Nisar Ahemd, Zhe Zhao, Martin J. Lavery, Nima Ashrafi, Solyman Ashrafi, Shilpa Talwar, Soji Sajuyigbe, Moshe Tur, Andreas F. Molischand Alan E. Willner, "Experimental Measurements of Multipath-Induced Intra- and Inter-Channel Crosstalk Effects in a Millimeter-wave Communications Link using Orbital-Angular-Momentum Multiplexing," **IEEE International Communication Conference (ICC) 2015**, paper1570038347, London, UK, Jun. 2015(IEEE, Piscataway, NJ, 2015).

208. Zhe Zhao, Yongxiong Ren, Guodong Xie, Yan Yan, Long Li, Hao Huang, Changjing Bao, Nisar Ahemd, Martin J. Lavery, Chongfu Zhang, Nima Ashrafi, Solyman Ashrafi, Shilpa Talwar, Soji Sajuyigbe, Moshe

REFEREED CONFERENCE PROCEEDINGS: (CONTINUED)

Tur, Andreas F. Molisch and Alan E. Willner, "Experimental Demonstration of 16-Gbit/s Millimeter-wave Communications Link using Thin Metamaterial Plates to Generate Data-Carrying Orbital-Angular-Momentum Beams," **IEEE International Communication Conference (ICC) 2015**, paper 1570051555, London, UK, Jun. 2015 (IEEE, Piscataway, NJ, 2015).

209. Amirhossein Mohajerin Ariaei, Morteza Ziyadi, Mohammad-Reza Chitgarha, Ahmed Almaiman, Yinwen Cao, Youichi Akasaka, Jeng-Yuan Yang, Motoyoshi Sekiya, Joseph Touch, Moshe Tur, Shigehiro Takasaka, Ryuichi Sugizaki, Carsten langrock, Martin M. Fejer, and Alan Willner, "Experimental Demonstration of Tunable Phase-Noise Mitigation and Automatic Frequency/Phase Locking for a 20-32 Gbaud QPSK Homodyne Receiver using Optical Mixing of Nonlinearly Generated Higher Harmonics,"**IEEE/OSA Conference on Optical Fiber Communications (OFC) and National Fiber Optics Engineers Conference (NFOEC),** paper M2E.4, Los Angeles, CA, Mar. 2015 (Optical Society of America, Washington, D.C., 2015).

210. Yinwen Cao, Morteza Ziyadi, Youichi akasaka, Amirhossein Mohajerin-Ariaei, Jeng-Yuan Yang, Ahmed Almaiman, Peicheng Liao, Shigehiro Takasaka, Ryuichi Sugizaki, Joseph Touch, Motoyoshi Sekiya, Moshe Tur, Alan Willner, "Experimental Demonstration of Optical Signal Level Swapping and Multi-level Amplitude Noise Mitigation using Three Parametric Gain Regions, "**IEEE/OSA Conference on Optical Fiber Communications (OFC) and National Fiber Optics Engineers Conference (NFOEC),** paper W2A.49, Los Angeles, CA, Mar. 2015 (Optical Society of America, Washington, D.C., 2015).

211. Deng Pan, Changjian Ke, Songnian Fu, Deming Liu and Alan Willner, "A Noise Suppression Method for Optical Spectrum Measurement Utilizing SBS-based Filter," **IEEE/OSA Conference on Optical Fiber Communications (OFC) and National Fiber Optics Engineers Conference (NFOEC),** paper W3I.1, Los Angeles, CA, Mar. 2015 (Optical Society of America, Washington, D.C., 2015).

212. Yongxiong Ren, Zhe Wang, Peicheng Liao, Long Li, Guogong Xie, Hao Huang, Zhe Zhao, Yan Yan, Nisar Ahmed, Martin P. J. Lavery, Nima Ashrafi, Solyman Ashrafi, Roger D. Linquist, Moshe Tur, Ivan B, Djordjevic, Mark A. Neifeld, and Alan E. Willner, "400-Gbit/s Free Space Optical Communications Link Over 120-meter using Multiplexing of 4 Collocated Orbital-Angular-Momentum Beams," **IEEE/OSA Conference on Optical Fiber Communications (OFC) and National Fiber Optics Engineers Conference (NFOEC),**paper M2F.1, Los Angeles, CA, Mar. 2015 (Optical Society of America, Washington, D.C., 2015).

**** Selected by the subcommittee as a "Top-Scored Papers" (5% of the submissions). ****

213. Long Li, Guogong Xie, Yongxiong Ren, Nisar Ahmed, Hao Huang, Zhe Zhao, Peicheng Liao, Martin P. J. Lavery, Yan Yan, Changjing Bao, Zhe Wang, Nima Ashrafi, Solyman Ashrafi, Moshe Tur, and Alan E. Willner, "Performance Enhancement of an Orbital-Angular-Momentum based Free-space Optical Communications Link Through Beam Divergence Controlling," **IEEE/OSA Conference on Optical Fiber Communications (OFC) and National Fiber Optics Engineers Conference (NFOEC),**paper M2F.6, Los Angeles, CA, Mar. 2015 (Optical Society of America, Washington, D.C., 2015).

214. Yongxiong Ren, Long Li, Guodong Xie, Yan Yan, Yinwen Cao, Hao Huang, Nisar Ahemd, Martin J. Lavery, Zhe Zhao, Chongfu Zhang, Miles Padgett, Moshe Tur, Giuseppe Caire, Andreas F. Molischand Alan E. Willnee, "Experimental Demonstration of 16 Gbit/s millimeter-wave Communications using MIMO Processing of 2 OAM Modes on Each of Two Transmitter/Receiver Antenna Apertures," **IEEE Globecom 2014**, paper 1569944271, Austin, TX, Dec. 2014 (IEEE, Piscataway, NJ, 2014).

**** 2014 Globecom Best Paper Award (14 papers out of ~2100 submissions). ****

215. Guodong Xie, Long Li, Yongxiong Ren, Hao Huang, Yan Yan, Nisar Ahmed, Zhe Zhao, Martin P. J. Lavery, Nima Ashrafi, Solyman Ashrafi, Moshe Tur, Andreas F. Molisch, and Alan E. Willner, "Performance Metrics and Design Parameters for an FSO Communications Link Based on Multiplexing of Multiple Orbital-

REFEREED CONFERENCE PROCEEDINGS: (CONTINUED)

Angular-Momentum Beams," **IEEE Globecom 2014**, paper 1570005079, Austin, TX, Dec. 2014(IEEE, Piscataway, NJ, 2014).

216. Yongxiong Ren, Guodong Xie, Hao Huang, Long Li, Nisar Ahmed, Yan Yan, Martin Lavery, Moshe Tur, Mark A. Neifeld, Samuel Dolinar, Miles Padgett, Robert Boyd, Jeffrey Shapiro, and Alan Willner, "1-Tbit/s Orbital-Angular-Momentum Multiplexed FSO Link Through Emulated Turbulence With a Data-Carrying Beacon on a Separate Wavelength for Compensation," **Frontiers in Optics (FiO) 2014,** paper FTh3B.7, Tucson, AZ, Oct. 2014 (Optical Society of America, 2014).

217. Guodong Xie, Yongxiong Ren, Hao Huang, Nisar Ahmed, Long Li, Yan Yan, Martin Lavery, Miles Padgett, Alan Willner, "Experimental Analysis of Multiplexing/demultiplexing Laguerre Gaussian Beams with Different Radial Index," **Frontiers in Optics (FiO) 2014**, paper FTh4B.6, Tucson, AZ, Oct. 2014 (Optical Society of America, 2014).

218. Martin Lavery, Hao Huang, Yongxiong Ren, Guodong Xie, and Alan Willner, " Demonstration of a 280 G-bit/s Communications Link Utilizing Plane Wave Multiplexing," **Frontiers in Optics (FiO) 2014**, paper FTh3B.4, Tucson, AZ, Oct. 2014 (Optical Society of America, 2014).

219. Jian Wang, Shuhui Li, Ming Luo, Jun Liu, Long Zhu, Chao Li, Dequan Xie, Qi Yang, Shaohua Yu, Junqiang Sun, Xinliang Zhang, William Shieh, and Alan E. Willner, "N-Dimentional Multiplexing Link with 1.036-Pbit/s Transmission Capacity and 112.6-bit/s/Hz Spectral Efficiency using OFDM-8QAM Signals over 368 WDM Pol-Muxed 26 OAM Modes,"**European Conference on Optical Communications (ECOC)**, paper Mo.4.5.1, Cannes, France, Sept. 2014.

220. MortezaZiyadi, Amirhossein Mohajerin-Ariaei, Mohammad Reza Chitgarha, Yinwen Cao, Salman Khaleghi, Ahmed Almaiman, Joseph Touch, LoukasParaschis, Moshe Tur, CarstenLangrock, Martin M. Fejer, and Alan E. Willner, "Optical Channel De-aggregator of 30-Gbaud QPSK and 20- Gbaud 8-PSK Data using Mapping onto Constellation Axes," **European Conference on Optical Communications** (ECOC), paper P.3.18, Cannes, France, Sept. 2014.

221. Mohammad Reza Chitgarha, Yinwen Cao, AmirhosseinMohajerin-Ariaei, Morteza Ziyadi, Salman Khaleghi, Ahmed Almaiman, Joseph Touch, CarstenLangrock, Martin M. Fejer, and Alan E. Willner, "Tunable Homodyne Detection using Nonlinear Optical Signal Processing to Automatically Lock a "Local" Pump Laser to an Incoming 20-to-40-Gbaud QPSK Data Signal," **European Conference on Optical Communications** (ECOC), paper Tu.3.6.5, Cannes, France, Sept. 2014.

222. Nisar Ahemd, Martin J. Lavery, Hao Huang, Guodong Xie, Yongxiong Ren, Yan Yan, and Alan E. Willner, Experimental Demonstration of Obstruction-Tolerant Free-Space Transmission of Two 50-Gbaud QPSK Data Channels using Bessel Beams Carrying Orbital Angular Momentum", **European Conference on Optical Communications** (ECOC), paper We.3.6.2, Cannes, France, Sept. 2014.

223. AmirhosseinMohajerin-Ariaei, Youichi Akasaka, Jeng-Yuan Yang, Mohammad Reza Chitgarha, Morteza Ziyadi, Yinwen Cao, Ahmed Almaiman, Joseph Touch, Moshe Tur, Motoyoshi Sekiya, S. Takasaka, R. Sugizaki, CarstenLangrock, Martin M. Fejer, and Alan E. Willner, "Bit-Rate-Tunable Noise Mitigation of 30-Gbaud QPSK Data using Phase Quantization and Amplitude Saturation,"**European Conference on Optical Communications** (ECOC), paper P.3.20, Cannes, France, Sept. 2014.

224. Joe Touch and Alan E. Willner, "Native Digital Processing for Optical Networking,"**Third International Conference on Future Generation Communication Technologies (FGCT 2014)**, paper 137, Dubline, Ireland, Aug. 2014 (IEEE, Piscataway, NJ, 2014).

225. AtiyahAhsan, Michael Wang, Mohammad Chitgarha, Dan Kilper, Alan Willner, and Keren Bergman,"Autonomous OSNR Monitoring and Cross-Layer Control in a Mixed Bit-Rate and Modulation

REFEREED CONFERENCE PROCEEDINGS: (CONTINUED)

Format System using Pilot Tones," **Advanced Photonics for Communications 2014**, paper NT5D.3, San Diego, CA, Jul. 2014 (Optical Society of America, 2014).

226. Deng Pan, Changjian Ke, Xin Zhou, Deming Liu, and Alan E. Willner, "Dynamic Range Improvement Through Balanced Detection for SBS-based High Resolution OSAs," **19th Opto-Electronics and Communications Conference (OECC)**, paper WE9F-4, Melbourne, Australia, July 2014.

227. Yan Yan, Guodong Xie, Hao Huang, Martin J. Lavery, Nisar Ahemd, Changjing Bao, Yongxiong Ren, Andreas F. Molisch, Moshe Tur, Miles Padgett, and Alan E. Willner, "Demonstration of 8-Mode 32-Gbit/s Millimeter-Wave Free-Space Communication Link using 4 Orbital-Angular-Momentum Modes on 2 Polarizations," **IEEE International Communication Conference (ICC) 2014**, paper1569835875, Sydney, Australia, Jun. 2014(IEEE, Piscataway, NJ, 2014).

228. Asher Voskoboinik, Alan E. Willner, Moshe Tur, "Performance Analysis of the Sweep-free Brillouin Optical Time-domain Analyzer (SF-BOTDA)," **23nd International Conference on Optical Fiber Sensors**, paper 9157, Santander, Spain, Jun. 2014

229. AmirhosseinMohajerinAriaei, Mohammed Chitgarha, MortezaZiyadi, Salman Khaleghi, Ahmed Almaiman, Joseph Touch, Moshe Tur, LoukasParaschis, CarstenLangrock, Martin Fejer, and Alan Willner, "Experimental Demonstration of a 2-Stage Continuously Tunable Optical Tapped-Delay-Line in which N+M Pump Lasers Produce N×M Taps," **APS/IEEE/OSA Conference on Lasers and Electro-Optics (CLEO)**, paper SM1G.5, San Jose, CA, June 2014 (Optical Society of America, Wash., D.C., 2014).

230. Zhe Zhao, Yongxiong Ren, Hao Huang, Guodong Xie, Yan Yan, Nisar Ahmed, Changjing Bao, Long Li, Yinwen Cao, and Alan Willner, "Method for Bi-directional Conversion between Fundamental Gaussian Beams and Spatially Polarized Beams using a Spatial Light Modulator," **APS/IEEE/OSA Conference on Lasers and Electro-Optics (CLEO)**, paper SM3J.4, San Jose, CA, June 2014 (Optical Society of America, Wash., D.C., 2014).

231. Guodong Xie, Yongxiong Ren, Hao Huang, Nisar Ahmed, Long Li, Yan Yan, Martin Lavery, Miles Padgett, Moshe Tur, Samuel Dolinar, and Alan Willner, "Experimental Comparison of Single and Double Partial Receiver Apertures for Recovering Signals Transmitted using Orbital-Angular-Momentum," **APS/IEEE/OSA Conference on Lasers and Electro-Optics (CLEO)**, paper SM3J.2, San Jose, CA, June 2014 (Optical Society of America, Wash., D.C., 2014).

232. Hao Huang, Guodong Xie, Nisar Ahmed, Yongxiong Ren, Yan Yan, Martin Lavery, Miles Padgett, Samuel Dolinar, and Alan Willner,"Experimental Demonstration of Orbital-Angular-Momentum Demultiplexing using an Optical FFT in the Spatial Domain," **APS/IEEE/OSA Conference on Lasers and Electro-Optics (CLEO)**, paper SM3J.6, San Jose, CA, June 2014 (Optical Society of America, Wash., D.C., 2014).

233. ChangjingBao, Lin Zhang, Yan Yan, Hao Huang, GuodongXie, AnuAgarwal, Lionel Kimerling, Jurgen Michel, and Alan Willner, "Tailoring of a Broader and Flatter Frequency Comb using a MicroringResonator with a Low-Index Slot," **APS/IEEE/OSA Conference on Lasers and Electro-Optics (CLEO)**, paper SM1M.5, San Jose, CA, June 2014 (Optical Society of America, Wash., D.C., 2014).

234. MortezaZiyadi, AmirhosseinMohajerin-Ariaei, Mohammed Chitgarha, Salman Khaleghi, Ahmed Almaiman, Amin Abouzaid, Joseph Touch, Moshe Tur, LoukasParaschis, CarstenLangrock, Martin Fejer, and Alan Willner, "Experimental Demonstration of a Variable Bandwidth, Shape and Center-Frequency RF Photonics Filter using a Continuously Tunable Optical Tapped-Delay-Line and Having an Optical Output," **APS/IEEE/OSA Conference on Lasers and Electro-Optics (CLEO)**, paper STu3I.4, San Jose, CA, June 2014 (Optical Society of America, Wash., D.C., 2014).

REFEREED CONFERENCE PROCEEDINGS: (CONTINUED)

235. Nisar Ahmed, Guodong Xie, Yongxiong Ren, Long Li, Hao Huang, Yan Yan, and Alan Willner, "Experimental Demonstration of an Apodized Aperture for Receiving a Data-Carrying Orbital-Angular-Momentum Beam," **APS/IEEE/OSA Conference on Lasers and Electro-Optics (CLEO)**, paper SM3J.1, San Jose, CA, June 2014 (Optical Society of America, Wash., D.C., 2014).

236. Martin Lavery, Yan Yan, GuodongXie, Hao Huang, MosheTur, Andreas Molisch, Miles Padgett, and Alan Willner, "A Quasi-Optical Tool for the Demultiplexing of Orbital Angular Momentum Carried at Millimeter-Wave Frequencies," **APS/IEEE/OSA Conference on Lasers and Electro-Optics (CLEO)**, paper FTh3D.8, San Jose, CA, June 2014 (Optical Society of America, Wash., D.C., 2014).

237. Stanley Johnson, Weiyang Mo, Milorad Cvijetic, Jun He, John Wissinger, and Alan E. Willner,"Real-Time Software-Defined Dynamic Resource Allocation using OpenFlow for Next-Generation OFDM-based Optical Access Networks,"**IEEE/OSA Conference on Optical Fiber Communications (OFC) and National Fiber Optics Engineers Conference (NFOEC),** paper Tu2F.5, San Francisco, CA, Mar. 2014 (Optical Society of America, Washington, D.C., 2014).

238. Giovanni Milione, Hao Huang, Martin Lavery, Alan E. Willner, Robert Alfano, Thien An Nguyen, and Miles Padgett, "Orbital-Angular-Momentum Mode (De)Multiplexer: A Single Optical Element for MIMO-based and non-MIMO-based Multimode Fiber Systems," **IEEE/OSA Conference on Optical Fiber Communications (OFC) and National Fiber Optics Engineers Conference (NFOEC),** paper M3K.6, San Francisco, CA, Mar. 2014 (Optical Society of America, Washington, D.C., 2014).

239. Amirhossein Mohajerin Ariaei, Mohammad Reza Chitgarha, Morteza Ziyadi, Salman Khaleghi, Ahmed Almaiman, Moshe Willner, Joe Touch, Moshe Tur, Loukas Paraschis, Carsten Langrock, Martin Fejer, and Alan E. Willner, "Experimental Demonstration of All Optical Phase Noise Mitigation of 40-Gbits/s QPSK Signals by Mixing Differentially Delayed Nonlinear Products," **IEEE/OSA Conference on Optical Fiber Communications (OFC) and National Fiber Optics Engineers Conference (NFOEC),** paper W3F.3, San Francisco, CA, Mar. 2014 (Optical Society of America, Washington, D.C., 2014).

240. Morteza Ziyadi, Mohammad Reza Chitgarha, Amirhossein Mohajerin Ariaei, Salman Khaleghi, Ahmed Almaiman, Moshe Willner, Joe Touch, Moshe Tur, Loukas Paraschis, Carsten Langrock, Martin Fejer, and Alan E. Willner, "Experimental Demonstration of Optical Nyquist Generation of 32-Gbaud QPSK using a Comb-based Tunable Optical Tapped-Delay-Line FIR Filter," **IEEE/OSA Conference on Optical Fiber Communications (OFC) and National Fiber Optics Engineers Conference (NFOEC),** paper W1G.2, San Francisco, CA, Mar. 2014 (Optical Society of America, Washington, D.C., 2014).

241. Guodong Xie, Yongxiong Ren, Hao Huang, Martin Lavery, Nisar Ahmed, Yan Yan, Changjing Bao, Long Li, Zhe Zhao, Yinwen Cao, Moshe Willner, Miles Padgett, Moshe Tur, Samuel Dolinar, Robert Boyd, Jeffrey Shapiro, and Alan E. Willner, "Experiment Turbulence Compensation of 50-Gbaud/s Orbital-Angular-Momentum QPSK Signals using Intensity-only based SPGD Algorithm," **IEEE/OSA Conference on Optical Fiber Communications (OFC) and National Fiber Optics Engineers Conference (NFOEC),** paper W1H.1, San Francisco, CA, Mar. 2014 (Optical Society of America, Washington, D.C., 2014).

242. Ahmed Almaiman, Mohammad Reza Chitgarha, Wajih Daab, Morteza Ziyadi, Amirhossein Mohajerin Ariaei, Salman Khaleghi, Moshe Willner, Vijay Vusirikala, Wendy Zhao, Dan Kilper, Loukas Paraschis, Atiyah Ahsan, Michael Wang, Keren Bergman, Moshe Tur, Joe Touch, and Alan E. Willner, "Experimental Demonstration of Robustness and Accuracy of an MZI-based OSNR Monitor under Transmitter Drift and Reconfigurable Networking Conditions for Pol-Muxed 25-Gbaud QPSK and 16-QAM Channels," **IEEE/OSA Conference on Optical Fiber Communications (OFC) and National Fiber Optics Engineers Conference (NFOEC),** paper W2A.30, San Francisco, CA, Mar. 2014 (Optical Society of America, Washington, D.C., 2014).

REFEREED CONFERENCE PROCEEDINGS: (CONTINUED)

243. Moshe J. Willner, Hao Huang, Nisar Ahmed, Guodong Xie, Yongxiong Ren, Yan Yan, Martin P. J. Lavery, Miles J. Padgett, Moshe Tur, and Alan E. Willner, "Reconfigurable Orbital-Angular-Momentum Manipulation and Switching of Polarization-multiplexed 100-Gbit/s QPSK Data Channels," **IEEE Photonics Conference (IPC),** ***Postdeadline Paper***, paper PDP1, Bellevue, WA, Sept.2013 (IEEE, Piscataway, NJ, 2013).

244. Guodong Xie, Yongxiong Ren, Hao Huang, Yan Yan,Changjing Bao,Nisar Ahmed,Moshe Willner,Martin Lavery,Miles Padgett, and Alan Willner"Analysis of Aperture Size for Partially Receiving and De-multiplexing 100-Gbit/s Optical Orbital Angular Momentum Channels over Free-Space Link," **IEEE Globecom 2013**, paper 1569795545, Atlanta, GA, Dec. 2013(IEEE, Piscataway, NJ, 2013).

245. Joe Touch, S. Suryaputra, J. Bannister, and Alan E. Willner, "An Optical Packet Switch using Forward-Shift Switched Delay Lines," **2013 18th OptoElectronics and Communications Conference**, paper TuPT_4, Kyoto, Japan, Jun. 2013(Optical Society of America, 2013).

246. Yongxiong Ren, Hao Huang, Guodong Xie, Changjing Bao, Long Li, Nisar Ahmed, Yan Yan, Moshe Willner, Matin P. J. Lavery, Moshe Tur, Mark A. Neifeld, Sam J. Dolinar, Miles J. Padgett, Robert W. Boyd, Jeffery H. Shapiro, and Alan E. Willner, "Simultaneous Pre-and Post-Turbulence Compensation of Multiple Orbital-Angular-Momentum 100-Gbit/s Data Channels in a Bidirectional Link using a Single Adaptive-Optics System," **Frontiers in Optics (FiO) 2013,** ***Postdeadline Paper***, paper FW6B.6, Orlando, FL, Oct. 2013(Optical Society of America, 2013).

247. Yongxiong Ren, Guodong Xie, Hao Huang, Changjing Bao, Yan Yan, Nisar Ahmed, Martin Lavery, Baris Erkmen, Samuel Dolinar, Moshe Tur, Mark Neifeld, Miles Padgett, Robert Boyd, Jeffrey Shapiro, and Alan Willner, "Simultaneous Turbulence Compensation of Multiple Orbital-Angular-Momentum 100-Gbit/s Data Channels using a Gaussian Probe Beam for Wavefront Sensing," **European Conference on Optical Communications (ECOC)**, paper We.3.D.1, London, Great Britain, Sept. 2013.

248. Hao Huang, Guodong Xie, Yongxiong Ren, Changjing Bao, Yan Yan, Nisar Ahmed, Samuel Dolinar, Mark Neifeld, Alan Willner, Mohammad Reza Chitgarha, and Morteza Ziyadi, "4×4 MIMO Equalization to Mitigate Crosstalk Degradation in a Four-Channel Free-Space Orbital-Angular-Momentum-Multiplexed System," **European Conference on Optical Communications (ECOC),** paper Th.1.C.4, London, Great Britain, Sept. 2013.

249. Mohammad Reza Chitgarha, Morteza Ziyadi, Salman Khaleghi, Amirhossein Mohajerin-Ariaei, Ahmed Almaiman, Joe Touch, Moshe Tur, Carsten Langrock, Martin Fejer, and Alan Willner, "Reconfigurable 2-D WDM Optical Tapped-Delay-Line to Correlate 20-Gbaud QPSK Data," **European Conference on Optical Communications (ECOC),** paper Tu.1.C.6, London, Great Britain, Sept. 2013.

250. Nisar Ahmed, Hao Huang, Yongxiong Ren, Yan Yan, Guodong Xie, and Alan Willner, "Reconfigurable 2×2 Orbital-Angular-Momentum-Based Optical Switching of 50-Gbaud QPSK Channels,"**European Conference on Optical Communications (ECOC),** paper Th.1. C.3, London, Great Britain, Sept. 2013.

    **** Selected by the subcommittee as the "Top-Ranked Paper". ****

251. Morteza Ziyadi, Mohammad Reza Chitgarha, Salman Khaleghi, Amirhossein Mohajerin-Ariaei, Ahmed Almaiman, Joe Touch, Moshe Tur, Carsten Langrock, Martin Fejer, and Alan Willner, "Tunable Optical Correlator using an Optical Frequency Comb for Generating Multiple Taps in a Tapped-Delay-Line Composed of a Single Nonlinear Element," **European Conference on Optical Communications (ECOC),** paper Tu.1.C.5, London, Great Britain, Sept. 2013.

    **** Selected by the subcommittee as a "Top-Scored Papers". ****

REFEREED CONFERENCE PROCEEDINGS: (CONTINUED)

252. Deng Pan, Changjian Ke, Songnian Fu, Yaping Liu, Deming Liu, and Alan Willner, "Laser Spectral Linewidth Suppression Scheme for Coherent Detection," **European Conference on Optical Communications (ECOC),** paper P.1.12, London, Great Britain, Sept. 2013.

253. Yan Yan, Lin Zhang, Changjing Bao, and Alan E. Willner, "Broadband Low Chromatic Dispersion and Supercontinuum Generation in a Conventional Step-Index Fiber and an OAM-Supporting Vortex Fiber using a Submicron Slot", **IEEE Photonics Conference 2013**, paper TuF1.4, September, Bellevue, WA (IEEE, Piscataway, NJ, 2013).

254. J. Touch, S. Suryaputra, J. Bannister, and A.E. Willner, "An Optical Packet Switch using Forward-Shift Switched Delay Lines,"**10th Conference on Lasers and Electro-Optics Pacific Rim, and the 18th OptoElectronics and Communications Conference/ Photonics in Switching 2013(CLEO-PR&OECC/PS 2013)**,paper TuPT-4, July 2013(Optical Society of America, Wash., D.C., 2013).

255. Yongxiong Ren, Yequn Zhang, Yang Yue, Nenad Bozinovic, Guodong Xie, Hao Huang, Moshe Tur, Poul Kristensen, Ivan Djordjevic, Siddharth Ramachandran, and Alan Willner, "Efficient Crosstalk Mitigation of OAM Based 400-Gbit/sQPSK Data Transmission in 1.1-km Vortex Fiber by using Soft-Decision LDPC Codes,"**APS/IEEE/OSA Conference on Lasers and Electro-Optics (CLEO)**, paper CM2G.5, San Jose, CA, June 2013 (Optical Society of America, Wash., D.C., 2013).

256. Mohammad Reza Chitgarha, Morteza Ziyadi, Salman Khaleghi, Ahmed Almaiman, Amirhossein Mohajerin Ariaei, Loukas Paraschis, Ori Gerstel, Carsten Langrock, Martin Fejer, Joe Touch,and Alan E. Willner,"Demonstration of Tunable Optical Generation of Higher-Order Modulation Formats using Nonlinearities and Coherent Frequency Comb,"**APS/IEEE/OSA Conference on Lasers and Electro-Optics (CLEO)**, paper CTu1G.2, San Jose, CA, June 2013 (Optical Society of America, Wash., D.C., 2013).

257. Asher Voskoboinik, Zhiyong Zhang, Ahmed Almaiman, Alan E. Willner, and Moshe Tur, "Differential Pulse-Width Pair BOTDA using Simultaneous Frequency Domain Interrogation," **APS/IEEE/OSA Conference on Lasers and Electro-Optics (CLEO)**, paper CTh4H.5, San Jose, CA, June 2013 (Optical Society of America, Wash., D.C., 2013).

258. Changjing Bao, Yan Yan, Lin Zhang, Yang Yue, and Alan E. Willner,"Tailoring of Low Chromatic Dispersion over a Broadband in Silicon Waveguides using a Double-Slot Design," **APS/IEEE/OSA Conference on Lasers and Electro-Optics (CLEO)**, paper JTu4A.53, San Jose, CA, June 2013 (Optical Society of America, Wash., D.C., 2013).

259. Hao Huang, Yongxiong Ren, Guodong Xie, Yan Yan, Yang Yue, Nisar Ahmed, Martin Lavery, Miles Padgett, Sam Dolinar, and Alan E. Willner,"Tunable Filter for Orbital-Angular-Momentum Multiplexed Optical Channels,"**APS/IEEE/OSA Conference on Lasers and Electro-Optics (CLEO)**, paper JTu4A.89, San Jose, CA, June 2013 (Optical Society of America, Wash., D.C., 2013).

260. Zhe Zhao, Jian Wang, Shuhui Li, and Alan E. Willner, "Selective Broadband Generation of Orbital Angular Momentum Carrying Vector Beams using Metamaterials,"**APS/IEEE/OSA Conference on Lasers and Electro-Optics (CLEO)**, paper QM4A.7, San Jose, CA, June 2013 (Optical Society of America, Wash., D.C., 2013).

261. Asher Voskoboinik, Alan E. Willner, and Moshe Tur, "Analytical Investigation of the Brillouin Interaction Between Multiple Pulsed Pump Tones and Probe Waves," **SPIE's 5th European Workshop on Optical Fibre Sensors (EWOFS) 2013**, paper 8794-158, Krakow, Poland, May 2013 (Bellingham, WA, SPIE, 2013).

262. Hao Huang, Guodong Xie, Yan Yan, Nisar Ahmed, Yongxiong Ren, Yang Yue, Dvora Rogawski, Moshe Tur, Baris Erkmen, Kevin Birnbaum, Samuel Dolinar, Martin Lavery, Miles Padgett, and Alan Willner, "100 Tbit/s Free-Space Data Link using Orbital Angular Momentum Mode Division Multiplexing Combined with

REFEREED CONFERENCE PROCEEDINGS: (CONTINUED)

Wavelength Division Multiplexing,"**IEEE/OSA Conference on Optical Fiber Communications (OFC) and National Fiber Optics Engineers Conference (NFOEC),** paper OTh4G.5, Anaheim, CA, Mar. 2013 (Optical Society of America, Washington, D.C., 2013).

263. Salman Khaleghi, Mohammad Reza Chitgarha, Morteza Ziyadi, Wajih Daab, Amirhossein Mohajerin-Ariaei, Dvora Rogawski, Joseph Touch, Moshe Tur, Carsten Langrock, Martin Fejer, and Alan Willner, "A Tunable Optical Tapped-Delay-Line that Simultaneously and Independently Processes Multiple Input WDM Data Signals,"**IEEE/OSA Conference on Optical Fiber Communications (OFC) and National Fiber Optics Engineers Conference (NFOEC),** paper OTh4D.2, Anaheim, CA, Mar. 2013 (Optical Society of America, Washington, D.C., 2013).

264. Yang Yue, Nenad Bozinovic, Yongxiong Ren, Hao Huang, Moshe Tur, Poul Kristensen, Siddharth Ramachandran, and Alan Willner, "1.6-Tbit/s Muxing, Transmission and Demuxing Through 1.1-km of Vortex Fiber Carrying 2 OAM Beams Each with 10 Wavelength Channels,"**IEEE/OSA Conference on Optical Fiber Communications (OFC) and National Fiber Optics Engineers Conference (NFOEC),** paper OTh4G.2, Anaheim, CA, Mar. 2013 (Optical Society of America, Washington, D.C., 2013).

265. Hao Huang, Yang Yue, Yan Yan, Nisar Ahmed, Yongxiong Ren, and Alan Willner, "Orbital-Angular-Momentum-Based Reconfigurable and "Lossless" Optical Add/Drop Multiplexing of Multiple 100-Gbit/s Channels,"**IEEE/OSA Conference on Optical Fiber Communications (OFC) and National Fiber Optics Engineers Conference (NFOEC),** paper OTh4G.4, Anaheim, CA, Mar. 2013 (Optical Society of America, Washington, D.C., 2013).

266. Yang Yue, Nisar Ahmed, Hao Huang, Yan Yan, Yongxiong Ren, and Alan Willner, "Reconfigurable Orbital-Angular-Momentum-Based Switching among Multiple 100-Gbit/s Data Channels,"**IEEE/OSA Conference on Optical Fiber Communications (OFC) and National Fiber Optics Engineers Conference (NFOEC),** paper OM2G.1, Anaheim, CA, Mar. 2013 (Optical Society of America, Washington, D.C., 2013).

267. Mohammad Reza Chitgarha, Salman Khaleghi, Wajih Daab, Morteza Ziyadi, Amirhossein Mohajerin-Ariaei, Dvora Rogawski, Moshe Tur, Vijay Vusirikala, Wendy Zhao, Joseph Touch, and Alan Willner, "Demonstration of WDM OSNR Performance Monitoring and Operating Guidelines for Pol-Muxed 200-Gbit/s 16-QAM and 100-Gbit/s QPSK Data Channels,"**IEEE/OSA Conference on Optical Fiber Communications (OFC) and National Fiber Optics Engineers Conference (NFOEC),** paper OTh3B.6, Anaheim, CA, Mar. 2013 (Optical Society of America, Washington, D.C., 2013).

268. Mohammad Reza Chitgarha, Salman Khaleghi, Morteza Ziyadi, Wajih Daab, Amirhossein Mohajerin-Ariaei, Dvora Rogawski, Joseph Touch, Moshe Tur, Carsten Langrock, Martin Fejer, and Alan Willner, "All-Optical Phase Noise Suppression using Optical Nonlinear Mixing Combined with Tunable Optical Delays,"**IEEE/OSA Conference on Optical Fiber Communications (OFC) and National Fiber Optics Engineers Conference (NFOEC),** paper OW4C.5, Anaheim, CA, Mar. 2013 (Optical Society of America, Washington, D.C., 2013).

269. Y. Rao, C. Chase, M. C.Y. Huang, S. Khaleghi, M. R. Chitgarha, M. Ziyadi, D. P. Worland, A. E. Willner, C. J. Chang-Hasnain, "MEMS Tunable 1550-nm High Contrast Grating VCSEL," **IEEE 23rd International Semiconductor Laser Conference (ISLC),** paper TuA3, October, San Diego, CA (IEEE, Piscataway, NJ, 2012).

270. Asher Voskoboinik, Alan E. Willner, Moshe Tur, "Sweep-Free Brillouin Time-Domain Analysis (SF-BOTDA) with Improved Spatial Resolution," **22nd International Conference on Optical Fiber Sensors**, paper 398, Beijing, China, Oct. 2012.

271. Nenad Bozinovic, Yang Yue, Yongxiong Ren, Moshe Tur, Poul Kristensen, Alan Willner, and Siddharth Ramachandran, "Orbital Angular Momentum (OAM) Based Mode Division Multiplexing (MDM) over a Km-

REFEREED CONFERENCE PROCEEDINGS: (CONTINUED)

length Fiber," **European Conference on Optical Communications (ECOC),** ***Postdeadline Paper*** Th3C.6, Amsterdam, Netherlands, Sept. 2012.

272. Mohammad Reza Chitgarha, Salman Khaleghi, Zichen Ma, Morteza Ziyadi, Ori Gerstel, Loukas Paraschis, Carsten Langrock, Martin Fejer, and Alan Willner, "Flexible, Reconfigurable Capacity Output of a High-Performance 64-QAM Optical Transmitter," **European Conference on Optical Communications (ECOC),** paper P3.14, Amsterdam, Netherlands, Sept. 2012.

273. Yan Yan, Yang Yue, Hao Huang, Yongxiong Ren, Nisar Ahmed, Alan Willner, and Samuel Dolinar, "Spatial-Mode Multicasting of a Single 100-Gbit/s Orbital Angular Momentum (OAM) Mode onto Multiple OAM Modes," **European Conference on Optical Communications (ECOC),** paper Th.2.D.1, Amsterdam, Netherlands, Sept. 2012.

274. Yongxiong Ren, Hao Huang, Yequn Zhang, Yang Yue, Yan Yan, Nisar Ahmed, Ivan Djordjevic, Sam Dolinar, and Alan Willner, "Experimental Demonstration of LDPC Coded Free-Space, Space-Division-Multiplexed Systems using Orbital Angular Momentum Modes," **European Conference on Optical Communications (ECOC),** paper Th.2.D.4, Amsterdam, Netherlands, Sept. 2012.

275. Jian Wang, Jeng-Yuan Yang, Hao Huang, and Alan E. Willner, "All-Optical 50-Gbaud/s Three-Input Hybrid Addition/Subtraction of Quaternary Base Numbers using Multiple Non-Degenerate FWM Processes and 100-Gbit/s DQPSK Signals," **European Conference on Optical Communications (ECOC),** paper Tu.1.A.4, Amsterdam, Netherlands, Sept. 2012.

276. Asher Voskoboinik, Yair Peled, Hao Huang, Alan E. Willner, and Moshe Tur, "Frequency-domain Analysis of Dynamically Applied Strain using Sweep-Free Brillouin Time-domain Analyzer," **European Conference on Optical Communications (ECOC),** paper P1.03, Amsterdam, Netherlands, Sept. 2012.

277. Jian Wang, H. Y. Fu, D. Y. Geng, and Alan E. Willner, "All-Optical Wavelength-/Time-Selective Switching/Dropping/Swapping for 100-GHz-Spaced WDM Signals using a Periodically Poled Lithium Niobate Waveguide," **European Conference on Optical Communications (ECOC),** paper Th.1.A.5, Amsterdam, Netherlands, Sept. 2012.

278. Nisar Ahmed, Hao Huang, Yang Yue, Yan Yan, Yongxiong Ren, and Alan E. Willner, "Demonstration of Add/Drop Multiplexer for 100-Gbit/s RZ-QPSK Channels over Spatially Multiplexed Orbital Angular Momentum Modes," **IEEE Photonics Conference 2012**, paper WU4, September, Burlingame, CA (IEEE, Piscataway, NJ, 2012).

279. Yi Rao, Christopher Chase, Michael C. Y. Huang, Salman Khaleghi, Mohammad Reza Chitgarha, Morteza Ziyadi, D. Phillip Worland, Alan Willner, and Connie Chang-Hasnain, "Continuous Tunable 1550-nm High Contrast Grating VCSEL," **APS/IEEE/OSA Conference on Lasers and Electro-Optics (CLEO)**, ***Postdeadline Paper*** CTh5C.3, San Jose, CA, June 2012 (Optical Society of America, Wash., D.C., 2012).

280. Yongxiong Ren, Hao Huang, Jeng-Yuan Yang, Yan Yan, Nisar Ahmed, Yang Yue, Alan Willner, Kevin Birnbaum, John Choi, Baris Erkmen, and Sam Dolinar, "Correction of Phase Distortion of an OAM Mode using GS Algorithm based Phase Retrieval," **APS/IEEE/OSA Conference on Lasers and Electro-Optics (CLEO)**, paper CF3I.4, San Jose, CA, June 2012 (Optical Society of America, Wash., D.C., 2012).

281. Hao Huang, Yongxiong Ren, Nisar Ahmed, Yan Yan, Yang Yue, Amanda Bozovich, Jeng-Yuan Yang, Alan Willner, Kevin Birnbaum, Baris Erkmen, John Choi, and Sam Dolinar, "Demonstration of OAM Mode Distortions Monitoring using Interference-Based Phase Reconstruction," **APS/IEEE/OSA Conference on Lasers and Electro-Optics (CLEO)**, paper CF3C.4, San Jose, CA, June 2012 (Optical Society of America, Wash., D.C., 2012).

REFEREED CONFERENCE PROCEEDINGS: (CONTINUED)

282. Yang Yue, Lin Zhang, Yan Yan, Nisar Ahmed, Jeng-Yuan Yang, Hao Huang, Yongxiong Ren, Sam Dolinar, Moshe Tur, and Alan Willner, "Octave-spanning Supercontinuum Generation of Vortices in a As2S3 Ring Photonic Crystal Fiber," **APS/IEEE/OSA Conference on Lasers and Electro-Optics (CLEO)**, paper CTh4B.6, San Jose, CA, June 2012 (Optical Society of America, Wash., D.C., 2012).

283. Yan Yan, Hao Huang, Yang Yue, Yongxiong Ren, Nisar Ahmed, Alan Willner, and Sam Dolinar, "Angular Sliced Laguerre-Gaussian (LG) Beams to Increase the Channel Number in Spatial-Mode Multiplexed System," **APS/IEEE/OSA Conference on Lasers and Electro-Optics (CLEO)**, paper CM2A.8, San Jose, CA, June 2012 (Optical Society of America, Wash., D.C., 2012).

284. Salman Khaleghi, Mohammad Reza Chitgarha, Omer F. Yilmaz, Moshe Tur, Michael W. Haney, Carsten Langrock, Martin M. Fejer, Alan E. Willner, "Experimental Characterization of Phase Tuning using Fine Wavelength Offset in a Complex-Coefficient Optical FIR Filter," **APS/IEEE/OSA Conference on Lasers and Electro-Optics (CLEO),** paper CM2B.4, San Jose, CA, June 2012 (Optical Society of America, Wash., D.C., 2012).

285. Yan Yan, Jeng-Yuan Yang, Yang Yue, Mohammad Chitgarha, Hao Huang, Nisar Ahmed, Jian Wang, Moshe Tur, Sam Dolinar, and Alan Willner, "High-Purity Generation and Power-Efficient Multiplexing of Optical Orbital Angular Momentum (OAM) Modes in a Ring Fiber for Spatial-Division Multiplexing Systems," **APS/IEEE/OSA Conference on Lasers and Electro-Optics (CLEO)**, paper JTh2A.58, San Jose, CA, June 2012 (Optical Society of America, Wash., D.C., 2012).

286. Asher Voskoboinik, Amanda Bozovich, Alan Willner, and Moshe Tur, "Sweep-free Brillouin Optical Time-Domain Analyzer with Extended Dynamic Range," **APS/IEEE/OSA Conference on Lasers and Electro-Optics (CLEO)**, paper CTh1G.3, San Jose, CA, June 2012 (Optical Society of America, Wash., D.C., 2012).

287. M. R. Chitgarha, S. Khaleghi, O. F. Yilmaz, M. Tur, M. W. Haney, and A. Willner, "Tunable Complex-Weight All-Optical IIR Filter Design based on Conversion/Dispersion Delays," **APS/IEEE/OSA Conference on Lasers and Electro-Optics (CLEO),** paper CF2I.4, San Jose, CA, June 2012 (Optical Society of America, Wash., D.C., 2012).

288. Hao Huang, Jeng-Yuan Yang, Xiaoxia Wu, Salman Khaleghi, Moshe Tur, and Alan Willner, "All-Optical Sub-Channel Data Erasing and Updating for a 16-QAM Signal using a Single PPLN Waveguide," **APS/IEEE/OSA Conference on Lasers and Electro-Optics (CLEO)**, paper CM2B.3, San Jose, CA, June 2012 (Optical Society of America, Wash., D.C., 2012).

289. Asher Voskoboinik, Yair Peled, Alan. E. Willner, and Moshe Tur, "Fast and Distributed Dynamic Sensing of Strain using Sweep-Free Brillouin Optical Time-Domain analysis (SF-BOTDA)," **3rd Asia Pacific Optical Sensors Conference (APOS 2012),** paper APO12-62, Sydney, Australia, Feb. 2012.

290. Mohammad Reza Chitgarha, Salman Khaleghi, Omer F. Yilmaz, Moshe Tur, Michael W. Haney, Alan E. Willner, "Coherent Multi-Pattern Correlator and All-Optical Equalizer Enabling Simultaneous Equalization, Wavelength Conversion and Multicasting," **IEEE/OSA Conference on Optical Fiber Communications (OFC) and National Fiber Optics Engineers Conference (NFOEC),** Los Angeles, CA, Mar. 2012 (Optical Society of America, Washington, D.C., 2012).

291. Salman Khaleghi, Mohammad Reza Chitgarha, Omer F. Yilmaz, Moshe Tur, Michael W. Haney, Alan E. Willner, "Universal QAM Encoder/Converter using Fully Tunable Complex-Coefficient Optical Tapped-Delay Line," **IEEE/OSA Conference on Optical Fiber Communications (OFC) and National Fiber Optics Engineers Conference (NFOEC),** Los Angeles, CA, Mar. 2012 (Optical Society of America, Washington, D.C., 2012).

REFEREED CONFERENCE PROCEEDINGS: (CONTINUED)

292. Yang Yue, Yan Yan, Nisar Ahmed, Jeng-Yuan Yang, Lin Zhang, Yongxiong Ren, Hao Huang, Samuel Dolinar Moshe Tur, and Alan Willner, "Mode and Propagation Effects of Optical Orbital Angular Momentum (OAM) Modes in a Ring Fiber," **IEEE/OSA Conference on Optical Fiber Communications (OFC) and National Fiber Optics Engineers Conference (NFOEC),** paper OM2D.2, Los Angeles, CA, Mar. 2012 (Optical Society of America, Washington, D.C., 2012).

293. Hao Huang, Jeng-Yuan Yang, Yang Yue, Yongxiong Ren, Scott Nuccio, Raluca Dinu, Devang Parekh, Constance Chang-Hasnain, and Alan Willner, "100-Gbit/s Amplitude and Phase Modulation Characterization of a Single-Drive, Low-Vπ Polymer Mach-Zehnder Modulator," **IEEE/OSA Conference on Optical Fiber Communications (OFC) and National Fiber Optics Engineers Conference (NFOEC),** paper OW4F.5, Los Angeles, CA, Mar. 2012 (Optical Society of America, Washington, D.C., 2012).

294. J. Wang, J.-Y. Yang, I. Fazal, N. Ahmed, Y. Yan, A. Willner, S. Dolinar, and M. Tur, "Experimental Demonstration of 100-Gbit/s DQPSK Data Exchange between Orbital-Angular-Momentum Modes," **IEEE/OSA Conference on Optical Fiber Communications (OFC) and National Fiber Optics Engineers Conference (NFOEC),** paper OW1I5, Los Angeles, CA, Mar. 2012 (Optical Society of America, Washington, D.C., 2012).

295. Omer Yilmaz, Salman Khaleghi, Mohammad Reza Chitgarha, and Alan Willner, "Simultaneous Multiple Pattern Correlation with <1 ns Reconfiguration Time," **IEEE/OSA Conference on Optical Fiber Communications (OFC) and National Fiber Optics Engineers Conference (NFOEC),** paper OW4H.2, Los Angeles, CA, Mar. 2012 (Optical Society of America, Washington, D.C., 2012).

296. Yang Yue, Yan Yan, Nisar Ahmed, Jeng-Yuan Yang, Lin Zhang, Yongxiong Ren, Hao Huang, Samuel Dolinar, Moshe Tur, and Alan Willner, "Mode and Propagation Effects of Optical Orbital Angular Momentum (OAM) Modes in a Ring Fiber," **IEEE/OSA Conference on Optical Fiber Communications (OFC) and National Fiber Optics Engineers Conference (NFOEC),** paper OM2D.2, Los Angeles, CA, Mar. 2012 (Optical Society of America, Washington, D.C., 2012).

297. Zahra Bakhtiari, Robert Hellwarth, Alan Willner, "Optical Sub-QPSK Symbol Information Extraction from 16-QAM Signal using Optical Phase Erasure," **IEEE/OSA Conference on Optical Fiber Communications (OFC) and National Fiber Optics Engineers Conference (NFOEC)**, paper JW2A.87, Los Angeles, CA, Mar. 2012 (Optical Society of America, Washington, D.C., 2012).

298. Changjian Ke, Bing Zhao, Minming Zhang, Deming Liu, Songlin Zhu, Jie Su, and Alan Willner, "Burst Mode Wavelength Upconversion using Gain-Clamped SOA for Applying WDM Technique to TDM-PON," **IEEE/OSA Conference on Optical Fiber Communications (OFC) and National Fiber Optics Engineers Conference (NFOEC),** paper JTh2A.60, Los Angeles, CA, Mar. 2012 (Optical Society of America, Washington, D.C., 2012).

299. Irfan Fazal, Jian Wang, Jeng-Yuan Yang, Nisar Ahmed, Bishara Shamee, Yan Yan, Alan Willner, Sam Dolinar, Kevin Birnbaum, Baris Erkmen, and John Choi, "Demonstration of 2-Tbit/s Data Link using Orthogonal Orbital-Angular-Momentum Modes and WDM," **Frontiers in Optics 2011** (OSA Annual Meeting), San Jose, CA, Oct. (Optical Society of America, Wash., D.C., 2011).

300. Jian Wang, Jeng-Yuan Yang, Irfan M. Fazal, Nisar Ahmed, Yan Yan, Bishara Shamee, Alan E. Willner, Kevin Birnbaum, John Choi, Baris Erkmen, Sam Dolinar and Moshe Tur, "25.6-bit/s/Hz Spectral Efficiency using 16-QAM Signals over Pol-Muxed Multiple Orbital-Angular-Momentum Modes,"**IEEE Photonics Society Conference 2011 (Annual Meeting)**, paper WW2, Arlington, VA, Oct. (IEEE, Piscataway, NJ, 2011).

301. Yan Yan, Lin Zhang, Jian Wang, Jeng-Yuan Yang, Irfan M. Fazal, Nisar Ahmed, Bishara Shamee, Alan E. Willner, Kevin Birnbaum, John Choi, Baris Erkmen, and Sam Dolinar, "Generating Orbital Angular

REFEREED CONFERENCE PROCEEDINGS: (CONTINUED)

Momentum Modes in a Fiber with a Central Square and a Ring Profile," **IEEE Photonics Society Conference 2011 (Annual Meeting)**, paper TuF3, Arlington, VA, Oct. (IEEE, Piscataway, NJ, 2011).

302. Hao Huang, Yang Yue, Lin Zhang, Bishara Shamee, Christopher Chase, Forrest G. Sedgwick, Moshe Tur, Connie J. Chang-Hasnain, and Alan E. Willner, "Tapped Delay-line Matched Filtering using a High-Contrast Grating Hollow-Core Waveguide," **IEEE Photonics Society Conference 2011 (Annual Meeting)**, paper MS2, Arlington, VA, Oct. (IEEE, Piscataway, NJ, 2011).

303. Omer Yilmaz, Lior Yaron, Salman Khaleghi, Mohammad Chitgarha, Moshe Tur, and Alan Willner, "True Time Delays using Conversion/Dispersion with Flat Magnitude Response for WidebandAnalog RF Signals,"**European Conference on Optical Communications (ECOC),** paper Mo.1.A.6, Geneva, Switzerland, Sept. 2011.

304. M.R. Chitgarha, S. Khaleghi, O.F. Yilmaz, A.E. Willner, "Bit Depth and Sample Rate Tunable Digital to Analog Converter using Conversion/Dispersion Based Delays," **European Conference on Optical Communications (ECOC),** paper We.10.P1.48, Geneva, Switzerland, Sept. 2011.

305. Jian Wang, Jeng-Yuan Yang, Irfan M. Fazal, Nisar Ahmed, Yan Yan, Bishara Shamee, Alan E. Willner, Kevin Birnbaum, John Choi, Baris Erkmen, Sam Dolinar, and Moshe Tur, "Demonstration of 12.8-bit/s/Hz Spectral Efficiency using 16-QAM Signals over Multiple Orbital-Angular-Momentum Modes,"**European Conference on Optical Communications (ECOC),** paper We.10.P1.76, Geneva, Switzerland, Sept. 2011.

306. Asher Voskoboinik, Omer F. Yilmaz, Alan E. Willner, and Moshe Tur, "Sweep-Free Distributed Brillouin Sensing using Multiple Pump and Probe Tones,"**European Conference on Optical Communications (ECOC),** paper We.10.P1.01, Geneva, Switzerland, Sept. 2011.

307. Yan Yan, Jian Wang, Lin Zhang, Jeng-Yuan Yang, Irfan M. Fazal, Nisar Ahmed, Bishara Shamee, Alan E. Willner, Kevin Birnbaum, John Choi, Baris Erkmen, and Sam Dolinar, "New Approach for Generating and (De)Multiplexing OAM Modes in a Fiber Coupler Consisting of a Central Ring and Four External Cores,"**European Conference on Optical Communications (ECOC),** paper We.10.P1.12, Geneva, Switzerland, Sept. 2011.

308. Hao Huang, Xiaoxia Wu, Jian Wang, Jeng-Yuan Yang, Asher Voskoboinik, and Alan Willner, "All Optical Reconfigurable Radio Frequency Up/Down-Conversion using Optical Parametric Loop Mirror,"**European Conference on Optical Communications (ECOC),** paper Mo.1.A.4, Geneva, Switzerland, Sept. 2011.

309. Yang Yue, Hao Huang, Lin Zhang, Jian Wang, Jeng-Yuan Yang, Omer Yilmaz, Jacob Levy, Michal Lipson, and Alan Willner, "Experimental Demonstration of UWB Monocycle Pulse Generation using Two-Photon Absorption in a Silicon Waveguide,"**European Conference on Optical Communications (ECOC),** paper We.10.P1.24, Geneva, Switzerland, Sept. 2011.

310. Jian Wang, Jeng-Yuan Yang, Xiaoxia Wu, and Alan Willner, "Experimental Demonstration of Variable Optical Hexadecimal Coding/Decoding of 10-Gbaud/s 16-QAM using FWM in HNLFs,"**APS/IEEE/OSA Conference on Lasers and Electro-Optics (CLEO)**, paper CWD4, Baltimore, MD, June 2011 (Optical Society of America, Wash., D.C., 2011).

311. Yan Yan, Lin Zhang, and Alan Willner, "On-Chip Mirrorless-Oscillation in Nonlinear Silicon Waveguides using Non-degenerate Four-Wave Mixing,"**APS/IEEE/OSA Conference on Lasers and Electro-Optics (CLEO)**, paper CTuX7, Baltimore, MD, June 2011 (Optical Society of America, Wash., D.C., 2011).

312. Jeng-Yuan Yang, X. Steve Yao, Jian Wang, X. Chen, Lei Dong, Leon Yao, and Alan Willner, "Practical 4-Stage Optical PMD Compensator for Mitigating First- and Second-Order PMD on 40-Gbit/s RZ-

REFEREED CONFERENCE PROCEEDINGS: (CONTINUED)

D(Q)PSK,"**APS/IEEE/OSA Conference on Lasers and Electro-Optics (CLEO)**, paper CThY2, Baltimore, MD, June 2011 (Optical Society of America, Wash., D.C., 2011).

313. Xiaoxia Wu, Jian Wang, Hao Huang, and Alan Willner, "Experimental Optical Multiplexing of Two 20-Gbit/s QPSK Data Channels from Different Wavelengths onto a Single 40-Gbit/s Star 16-QAM using Fiber Nonlinearities,"**APS/IEEE/OSA Conference on Lasers and Electro-Optics (CLEO)**, paper CThH4, Baltimore, MD, June 2011 (Optical Society of America, Wash., D.C., 2011).

314. Yang Yue, Lin Zhang, Xue Wang, Hao Huang, Weijian Yang, James Ferrara, Vadim Karagodsky, Christopher Chase, Moshe Tur, Connie Chang-Hasnain, and Alan Willner, "Hollow-Core-Waveguides using Adiabatically Chirped High-Contrast-Gratings for a >10X Loss Reduction,"**APS/IEEE/OSA Conference on Lasers and Electro-Optics (CLEO)**, paper CThAA4, Baltimore, MD, June 2011 (Optical Society of America, Wash., D.C., 2011).

315. Ali Fard, Jeng-Yuan Yang, Brandon Buckley, Jian Wang, Mohammad Chitgarha, Lin Zhang, Alan Willner, and Bahram Jalali, "100-Gb/s RZ-DQPSK Signal Monitoring using Time-stretch Enhanced Recording Oscilloscope,"**APS/IEEE/OSA Conference on Lasers and Electro-Optics (CLEO)**, paper CFP1, Baltimore, MD, June 2011 (Optical Society of America, Wash., D.C., 2011).

316. Xue Wang, Yang Yue, Lin Zhang, Hao Huang, Yan Yan, Weijian Yang, James Ferrara, Vadim Karagodsky, Christopher Chase, Moshe Tur, Connie Chang-Hasnain, and Alan Willner, "Tunable Optical Coupling in a Low-Loss Hollow Core Waveguide using Adiabatically Chirped High-Contrast-Gratings and MEMS Actuators,"**APS/IEEE/OSA Conference on Lasers and Electro-Optics (CLEO)**, paper JTuI74, Baltimore, MD, June 2011 (Optical Society of America, Wash., D.C., 2011).

317. Weijian Yang, James Ferrara, Karen Grutter, Anthony Yeh, Christopher Chase, Vadim Karagodsky, Devang Parekh, Yang Yue, Alan Willner, Ming Wu, and Connie Chang-Hasnain, "Novel Three-dimensional Hollow-core Waveguide using High-contrast Sub-wavelength Grating,"**APS/IEEE/OSA Conference on Lasers and Electro-Optics (CLEO)**, paper CThII4, Baltimore, MD, June 2011 (Optical Society of America, Wash., D.C., 2011).

318. Bishara Shamee, Lin Zhang, Yang Yue, Hao Huang, Xue Wang, Moshe Tur, Alan Willner, Chris Chase, Vadim Karagodsky, Forrest Sedgwick, and Connie J. Chang-Hasnain,"FIR Analog Filter Dependence of HCG-Based Hollow-Core Waveguides upon Varying of Waveguide Parameters,"**APS/IEEE/OSA Conference on Lasers and Electro-Optics (CLEO)**, paper JWA124, Baltimore, MD, June 2011 (Optical Society of America, Wash., D.C., 2011).

319. Asher Voskoboinik, Jian Wang, Alan E. Willner, and Moshe Tur, "Frequency Domain Simultaneous Tone Interrogation for Faster, Sweep-Free Brillouin Distributed Sensing," **21st International Conference on Optical Fiber Sensors**, Ottawa, Canada, May 2011.

320. O. Yilmaz, S. Khaleghi, M. R. Chitgarhga, S. Nuccio, and A. Willner, "Demonstration of 28-40-Gbaud, OOK/BPSK/QPSK Data-Transparent Optical Correlation with Control/Tunability over Time Delays, Phases and Number of Taps,"**IEEE/OSA Conference on Optical Fiber Communications (OFC),** paper OThN1, Los Angeles, CA, Mar. 2011 (Optical Society of America, Washington, D.C., 2011).

321. Jian Wang, Hao Huang, Xue Wang, Jeng-Yuan Yang, Omer F. Yilmaz, Xiaoxia Wu, Scott R. Nuccio, and Alan Willner, "2.3-Tbit/s (23X100-Gbit/s) RZ-DQPSK Grooming Switch (Simultaneous Add/Drop, Data Exchange and Equalization) using Double-Pass LCoS and Bidirectional HNLF," **IEEE/OSA Conference on Optical Fiber Communications (OFC),** paper OTuE2, Los Angeles, CA, Mar. 2011 (Optical Society of America, Washington, D.C., 2011).

REFEREED CONFERENCE PROCEEDINGS: (CONTINUED)

322. S. R. Nuccio, Z. Bakhtiari, Omer F. Yilmaz, and Alan E. Willner,"Wavelength-Conversion of 160-Gbit/s PDM 16-QAM using a Single Periodically-Poled Lithium Niobate Waveguide," **IEEE/OSA Conference on Optical Fiber Communications (OFC),** paper OWG5, Los Angeles, CA, Mar. 2011 (Optical Society of America, Washington, D.C., 2011).

323. H. Huang, Y. Yue, L. Zhang, X. Wang, C. Chase, D. Parekh, F. Sedgwick, M. Tur, M. C. Wu, C. J. Chang-Hasnain and A. E. Willner,"Analog Signal Performance of a Hollow-Core-Waveguide using High-Contrast-Gratings,"**IEEE/OSA Conference on Optical Fiber Communications (OFC),** Los Angeles, CA, Mar. 2011 (Optical Society of America, Washington, D.C., 2011).

324. Salman Khaleghi, Omer F. Yilmaz, Mohammad Reza Chitgarha, Irfan M. Fazal, and Alan E. Willner,"80-Gbit/s DQPSK Optical Tapped-Delay-Line Equalization using Finely Tunable Delays, Phases and Amplitudes,"**IEEE/OSA Conference on Optical Fiber Communications (OFC),** paper OThN4, Los Angeles, CA, Mar. 2011 (Optical Society of America, Washington, D.C., 2011).

325. Jian Wang, Jeng-Yuan Yang, Xiaoxia Wu, Omer F. Yilmaz, Scott R. Nuccio, and Alan Willner,"40-Gbaud/s (120-Gbit/s) Octal and 10-Gbaud/s (40-Gbit/s) Hexadecimal Simultaneous Addition and Subtraction using 8PSK/16PSK and Highly Nonlinear Fiber," **IEEE/OSA Conference on Optical Fiber Communications (OFC),** paper OThC3, Los Angeles, CA, Mar. 2011 (Optical Society of America, Washington, D.C., 2011).

326. Antonella Bogoni, Xiaoxia Wu, Scott R. Nuccio, Jian Wang, and Alan E. Willner,"640Gbit/s Reconfigurable OTDM Add-Drop Multiplexer,"**IEEE/OSA Conference on Optical Fiber Communications (OFC),** paper OMK4, Los Angeles, CA, Mar. 2011 (Optical Society of America, Washington, D.C., 2011).

327. Mohammad Reza Chitgarha, Salman Khaleghi, Omar Yilmaz, Jeng-Yuan Yang and Alan Willner,"Demonstration of Baud-Rate-Variable and Channel-Spacing-Tunable Demultiplexing of 10-40-Gbaud OFDM Subcarriers using a Multi-Tap Optical DFT,"**IEEE/OSA Conference on Optical Fiber Communications (OFC),** paper OWG3, Los Angeles, CA, Mar. 2011 (Optical Society of America, Washington, D.C., 2011).

328. S.R. Nuccio, R. Dinu, B. Shamee, D. Parekh, C. Chang-Hasnain, and A. E. Willner, "Modulation and Chirp Characterization of a 100-GHz EO Polymer Mach-Zehnder Modulator," **IEEE/OSA Conference on Optical Fiber Communications (OFC),** paper JThA030, Los Angeles, CA, Mar. 2011 (Optical Society of America, Washington, D.C., 2011).

329. Antonella Bogoni, Xiaoxia Wu, Scott R. Nuccio, Nisar Ahmed, and Alan E. Willner,"160 Gb/s All-Optical Binary-to-Quaternary Amplitude Shift Keying Format Conversion,"**IEEE/OSA Conference on Optical Fiber Communications (OFC),** paper OThN7, Los Angeles, CA, Mar. 2011 (Optical Society of America, Washington, D.C., 2011).

330. Xiaoxia Wu, Antonella Bogoni, Jian Wang, Hao Huang, Scott Nuccio, Omer Yilmaz, and Alan Willner,"40-to-640-Gbit/s Multiplexing and Subsequent 640-to-10-Gbit/s Demultiplexing using Cascaded Nonlinear Optical Loop Mirrors,"**IEEE/OSA Conference on Optical Fiber Communications (OFC),** paper OWG7, Los Angeles, CA, Mar. 2011 (Optical Society of America, Washington, D.C., 2011).

331. J.-Y. Yang, M. R. Chitgarha, L. Zhang, J. Wang, and A. E. Willner, "Optical Monitoring of Either Time Misalignment or PMD Accumulation in an 80-Gb/s Pol-MUX RZ-DPSK Signal using Degree-of-Polarization Measurements,"**IEEE Photonics Society Annual Meeting 2010**, paper ME2, Denver, Nov. (IEEE, Piscataway, NJ, 2010).

332. J. Wang, H. Huang, X. Wang, J.-Y. Yang, and A. E. Willner, "Optical Phase-Transparent Data Grooming Exchange of Multi-Channel 100-Gbit/s RZ-DQPSK Signals,"**IEEE Photonics Society Annual Meeting 2010**, paper WN2, Denver, Nov. (IEEE, Piscataway, NJ, 2010).

REFEREED CONFERENCE PROCEEDINGS: (CONTINUED)

333. Y. Yue, L. Zhang, F. G. Sedgwick, B. Shamee, W. Yang, J. Ferrara, C. Chase, R. G. Beausoleil, C. J. Chang-Hasnain, and A. E. Willner, "Chromatic Dispersion Variation and Its Effect on High-Speed Data Signals due to Structural Parameter Changes in a High-Contrast-Grating Waveguide,"**IEEE Photonics Society Annual Meeting 2010**, paper ThB2, Denver, Nov. (IEEE, Piscataway, NJ, 2010).

334. A. Bogoni, X. Wu, S. R. Nuccio, and A. E. Willner, "All-Optical Regeneration in a PPLN Waveguide,"**IEEE Photonics Society Annual Meeting 2010**, paper TuM3, Denver, Nov. (IEEE, Piscataway, NJ, 2010).

335. O.F. Yilmaz, S. Khaleghi, N. Ahmed, S. Nuccio, I. Fazal, X. Wu, and A.E. Willner, "Reconfigurable and Finely Tunable Optical Tapped Delay Line to Achieve 40 Gb/s Equalization and Correlation using Conversion/Dispersion Based Delays," **European Conference on Optical Communications (ECOC),** paper Mo.2.A.2, Torino, Italy, Sept. 2010.

336. Antonella Bogoni, Xiaoxia Wu, Zahra Bakhtiari, Scott Nuccio, and Alan E. Willner, "640 Gb/s All-Optical Logic Functions in a PPLN Waveguide," **European Conference on Optical Communications (ECOC),** paper Mo.1. A.5, Torino, Italy, Sept. 2010.

337. Jian Wang, Scott R. Nuccio, Hao Huang, Xue Wang, Omer F. Yilmaz, Xiaoxia Wu, Jeng-Yuan Yang, Yang Yue, and Alan E. Willner, "Demonstration of 100-Gbit/s DQPSK Data Exchange between Two Different Wavelength Channels using Parametric Depletion in a Highly Nonlinear Fiber," **European Conference on Optical Communications (ECOC),** paper Mo.1.A.4, Torino, Italy, Sept. 2010.

338. Xiaoxia Wu, Antonella Bogoni, Hao Huang, Scott R. Nuccio, Jian Wang, Omer F. Yilmaz, and Alan E. Willner, "Reconfigurable 40-Gbit/s Tributary Selection from a 640-Gbit/s Signal using NOLM-Based Cascaded Demultiplexing,"**European Conference on Optical Communications (ECOC),** paper P3.01, Torino, Italy, Sept. 2010.

339. O.F. Yilmaz, J. Wang, X. Wang, S.R. Nuccio, X. Wu, and A.E. Willner, "Multicasting of 50 Gb/s RZ-DPSK Signals using Self-Seeded FWM with Phase Modulated Pumps for SBS Suppression," **European Conference on Optical Communications (ECOC),** paper P3.23, Torino, Italy, Sept. 2010.

340. Yang Yue, Lin Zhang, Raymond Beausoleil, and Alan Willner,"Ultrabroadband Low Dispersion Silicon-on-Nitride Waveguide in Mid-Infrared Region," **OSA Topical Meeting on Integrated Photonics Research, Silicon and Nano Photonics (IPR),** paper IWH4, Monterey, CA, July (Optical Society of America, Wash., D.C., 2010).

341. J. Wang, S. Nuccio, J. Yang, H. Huang, X. Wu, A. Bogoni, and A. Willner, "50-Gbaud/s Optical Addition and Dual-Directional Subtraction of Quaternary Base Numbers using Nonlinearities and 100-Gbit/s (D)QPSK Signals," **OSATopical Meeting on Photonics in Switching**, **post-deadline paper** PDPWG2, Monterey, CA, July (Optical Society of America, 2010).

342. Antonella Bogoni, Xiaoxia Wu, Zahra Bakhtiari, Scott Nuccio, Robert W. Hellwarth, and Alan E. Willner, "640 Gb/s All-Optical Add/Drop Multiplexing Based on Pump Depletion in a PPLN Waveguide," **OSA Topical Meeting on Photonics in Switching**, paper PTuB6, Monterey, CA, July (Optical Society of America, Wash., D.C., 2010).

343. Jian Wang, Omer Yilmaz, Scott Nuccio, Xiaoxia Wu, Zahra Bakhtiari, Yinying Xiao Li, Jeng-Yuan Yang, Hao Huang, Yang Yue, Irfan Fazal, Robert Hellwarth, Alan Willner, "Data Traffic Grooming/Exchange of a Single 10-Gbit/s TDM Tributary Channel between Two Pol-Muxed 80-Gbit/s DPSK Channels,"**Conference on Lasers and Electro-Optics (CLEO)**, paper CFJ5, San Jose, CA, May 2010 (Optical Society of America, Wash., D.C., 2010).

REFEREED CONFERENCE PROCEEDINGS: (CONTINUED)

344. Lin Zhang, Yue Yang, Alan E. Willner, and Raymond G. Beausoleil, "Low Dispersion Silicon Slot Waveguides for Frequency Comb Generation with Equally Spaced Spectral Lines,"**Conference on Lasers and Electro-Optics (CLEO)**, paper CThAA7, San Jose, CA, May 2010 (Optical Society of America, Wash., D.C., 2010).

345. Yang Yue, Lin Zhang, Jian Wang, Yinying Xiao-Li, Raymond Beausoleil, and Alan Willner, ">25Å~ Reduction in the Effective Nonlinear Coefficient over a 100-nm Wavelength Range using Vertically-Slotted Silicon Waveguide,"**Conference on Lasers and Electro-Optics (CLEO)**, paper CThR6, San Jose, CA, May 2010 (Optical Society of America, Wash., D.C., 2010).

346. Lin Zhang, Jian Wang, Muping Song, Yang Yue, Yinying Xiao Li, Raymond, G. Beausoleil, and Alan E. Willner, "Nonlinear Distortions Induced by Non-Idealities of Integrated Silicon Waveguides in Analog Optical Links," **Conference on Lasers and Electro-Optics (CLEO)**, paper CThN4, San Jose, CA, May 2010 (Optical Society of America, Wash., D.C., 2010).

347. Yang Yue, Yinying Xiao-Li, Raymond G. Beausoleil, and Alan E. Willner, "Low Chromatic Dispersion of ±16 ps/(nm*km) over a 550-nm Wavelength Range using a Strip/Slot Hybrid Silicon Waveguide," **Conference on Lasers and Electro-Optics (CLEO)**, paper JThE42, San Jose, CA, May 2010 (Optical Society of America, Wash., D.C., 2010).

348. Omer F. Yilmaz, Scott Nuccio, Jian Wang, Xiaoxia Wu, and Alan E. Willner, "Multicasting of 40-Gbit/s NRZ-OOK Data into 24 RZ Copies using a Single Pump and Supercontinuum Generation,"**Conference on Lasers and Electro-Optics (CLEO)**, paper CWI3, San Jose, CA, May 2010 (Optical Society of America, Wash., D.C., 2010).

349. Lin Zhang, Yang Yue, Yinying Xiao-Li, Raymond G. Beausoleil, and Alan E. Willner, "Chromatic Dispersion in Tightly Curved Silicon Waveguides and Ring Resonators,"**Conference on Lasers and Electro-Optics (CLEO)**, paper CThB5, San Jose, CA, May 2010 (Optical Society of America, Wash., D.C., 2010).

350. Jeng-Yuan Yang, Mohammad R. Chitgarha, Lin Zhang, and Alan E. Willner, "Chromatic Dispersion Monitoring of 40-Gb/s OOK Data using Optical VSB Filtering at High Frequency," **Conference on Lasers and Electro-Optics (CLEO)**, paper JThE52, San Jose, CA, May 2010 (Optical Society of America, Wash., D.C., 2010).

351. Xiaoxia Wu, Hao Huang, Jian Wang, Xue Wang, Omer F. Yilmaz, Scott R. Nuccio, and Alan Willner, "Simultaneous Two-Channel Wavelength Conversion of 40-Gbit/s DPSK WDM Signals without Additional Pumps,"**Conference on Lasers and Electro-Optics (CLEO)**, paper JThE57, San Jose, CA, May 2010 (Optical Society of America, Wash., D.C., 2010).

352. Mohammadreza Chitgarha, Jeng-Yuan Yang, and Alan Willner, "Simultaneously Transmitter Chirp and Chromatic Dispersion Monitoring of OOK Data using First and Second Optical Harmonics of the Data Clock Tones,"**Conference on Lasers and Electro-Optics (CLEO)**, paper JThE53, San Jose, CA, May 2010 (Optical Society of America, Wash., D.C., 2010).

353. Jeng-Yuan Yang, Mohammad R. Chitgarha, Lin Zhang, and Alan E. Willner, "PMD and OSNR Insensitive 40-Gb/s OOK/DPSK Chromatic Dispersion Monitoring using a Delay-Line Interferometer and a <10-GHz Photodetector,"**Conference on Lasers and Electro-Optics (CLEO)**, paper JThE50, San Jose, CA, May 2010 (Optical Society of America, Wash., D.C., 2010).

354. Yinying Xiao-Li, Lin Zhang, Yang Yue, Jian Wang, Raymond G. Beausoleil, and Alan E. Willner, "Dispersion Tailoring in Dual Slot Waveguide," **Conference on Lasers and Electro-Optics (CLEO)**, paper CThR5, San Jose, CA, May 2010 (Optical Society of America, Wash., D.C., 2010).

REFEREED CONFERENCE PROCEEDINGS: (CONTINUED)

355. Bishara Shamee, Louis Christen, Scott Nuccio, Jeng-Yuan Yang, and Alan Willner, "Gaussian Minimum Shift Keying for Spectrally Efficient and Dispersion Tolerant Optical Communications," **Conference on Lasers and Electro-Optics (CLEO)**, paper JThE54, San Jose, CA, May 2010 (Optical Society of America, Wash., D.C., 2010).

356. Jian Wang, Zahra Bakhtiari, Yinying Xiao-Li, Omer Yilmaz, Scott Nuccio, Xiaoxia Wu, Hao Huang, Jeng-Yuan Yang, Yang Yue, Alan E. Willner, "Experimental Demonstration of Data Traffic Grooming of a Single 10-Gbit/s TDM Tributary Channel between Two 160-Gbit/s WDM Channels," **IEEE/OSA Conference on Optical Fiber Communications (OFC),** paper OWF1, San Diego, CA, Mar. 2010 (Optical Society of America, Washington, D.C., 2010).

357. S. R. Nuccio, O. F. Yilmaz, X. Wang, A. E. Willner, "Experimental Demonstration of All-Optical Polarization Multiplexing and Polarization Demultiplexing between Two 50-Gbit/s Channels and a Single 100-Gbit/s Channel," **IEEE/OSA Conference on Optical Fiber Communications (OFC),** paper OThV5, San Diego, CA, Mar. 2010 (Optical Society of America, Washington, D.C., 2010).

358. Jian Wang, Zahra Bakhtiari, Yinying Xiao-Li, Scott Nuccio, Omer Yilmaz, Xiaoxia Wu, Jeng-Yuan Yang, Yang Yue, Irfan Fazal, Alan E. Willner, "Phase-Transparent Optical Data Exchange of 40-Gbit/s DPSK Signals using Four-Wave-Mixing in a Highly Nonlinear Fiber," **IEEE/OSA Conference on Optical Fiber Communications (OFC),** paper OMT6, San Diego, CA, Mar. 2010 (Optical Society of America, Washington, D.C., 2010).

359. Xiaoxia Wu, Antonella Bogoni, Omer F. Yilmaz, Scott R. Nuccio, Jian Wang, and Alan E. Willner, "8-Fold 40-to-320-Gbit/s Phase-Coherent WDM-to-TDM Multiplexing and 320-to-40-Gbit/s Demultiplexing using Highly Nonlinear Fibers," **IEEE/OSA Conference on Optical Fiber Communications (OFC),** paper OThV4, San Diego, CA, Mar. 2010 (Optical Society of America, Washington, D.C., 2010).

360. Omer F. Yilmaz, Scott R. Nuccio, Xue Wang, Jian Wang, Irfan Fazal, Jeng Yuan Yang, Xiaoxia Wu, Alan E. Willner, "Experimental Demonstration of 8-Fold Multicasting of a 100 Gb/s Polarization-Multiplexed OOK Signal using Highly Nonlinear Fiber," **IEEE/OSA Conference on Optical Fiber Communications (OFC),** paper OWP8, San Diego, CA, Mar. 2010 (Optical Society of America, Washington, D.C., 2010).

361. Yang Yue, Lin Zhang, Jian Wang, Yinying Xiao-Li, Bishara Shamee, Vadim Karagodsky, Forrest G.Sedgwick, Werner Hofmann, Raymond G. Beausoleil, Connie J. Chang-Hasnain, and Alan E. Willner, "A "Linear" High-Contrast Gratings Hollow-Core Waveguide and its System Level Performance,"**IEEE/OSA Conference on Optical Fiber Communications (OFC),** paper OTuI5, San Diego, CA, Mar. 2010 (Optical Society of America, Washington, D.C., 2010).

362. Xiaoxia Wu, Jeffrey A. Jargon, Chih-Ming Wang, and Alan E. Willner, "Experimental Comparison of Performance Monitoring using Neural Networks Trained with Parameters Derived from Delay-Tap Plots and Eye Diagrams,"**IEEE/OSA Conference on Optical Fiber Communications (OFC) and National Fiber Optics Engineers Conference (NFOEC),** paper JThA17, San Diego, CA, Mar. 2010 (Optical Society of America, Washington, D.C., 2010).

363. Caroline P. Lai, Michael S. Wang, Ajay S. Garg, KerenBergman, Jeng-Yuan Yang, Mohammad R. Chitgarha, and Alan E. Willner, "Demonstration of QoS-Aware Packet Protection via Cross-Layer OSNR Signaling,"**IEEE/OSA Conference on Optical Fiber Communications (OFC),** paper OTuM2, San Diego, CA, Mar. 2010 (Optical Society of America, Washington, D.C., 2010).

364. Paolo Ghelfi, Lingmei Ma, Xiaoxia Wu, Alan E. Willner, and Antonella Bogoni, "All-Optical Parallelization for High Sampling Rate Photonic ADC in Fully Digital Radar Systems,"**IEEE/OSA Conference on Optical Fiber Communications (OFC),** paper OThU6, San Diego, CA, Mar. 2010 (Optical Society of America, Washington, D.C., 2010).

REFEREED CONFERENCE PROCEEDINGS: (CONTINUED)

365. Wei-Ren Peng, Kai-Ming Feng; A.E. Willner, and Sien Chi, "Sensitivity Bound for Optically-Preamplified Direct-Detected OFDM Systems using Spectrally Matched Filters," **IEEE Lasers and Electro-Optics Society Annual Meeting 2009**, Technical Digest, pp. 719-720, Turkey, Nov. (IEEE, Piscataway, NJ, 2009).

366. Lin Zhang, Yang Yue, Yinying Xiao-Li, Jian Wang, Raymond G. Beausoleil, and Alan E. Willner, "Achieving Uniform Chromatic Dispersion over a Wide Wavelength Range in Highly Nonlinear Slot Waveguides," **Frontiers in Optics 2009** (OSA Annual Meeting), paper FThE2, San Jose, CA, Oct. (Optical Society of America, Wash., D.C., 2009).

367. Avi Zadok, Xiaoxia Wu, Jacob Sendowski, Amnon Yariv, and Alan E. Willner, "Flexible All-Fiber Generation of Ultra-Wideband Signals via Pulse Compression and Differential Detection," **Frontiers in Optics 2009** (OSA Annual Meeting), paper FWK3, San Jose, CA, Oct. (Optical Society of America, Wash., D.C., 2009).

368. Yinying Xiao-Li, Lin Zhang, Yang Yue, Raymond G. Beausoleil, and Alan E. Willner, "Slot Waveguide Incorporating a Sub-core," **Frontiers in Optics 2009** (OSA Annual Meeting), paper FWZ5, San Jose, CA, Oct. (Optical Society of America, Wash., D.C., 2009).

369. Alan E. Willner, Jeng-Yuan Yang, and Xiaoxia Wu, "Optical Performance Monitoring to Enable Robust and Reconfigurable Optical High-Capacity Networks," **IEEE Military Communications Conference** (MILCOM), Technical Proceedings, Boston, Oct. 2009 (IEEE, Piscataway, NJ, 2009).

370. Xiaoxia Wu, Jian Wang, Omer F. Yilmaz, Scott R. Nuccio, Antonella Bogoni, and Alan E. Willner, "Bit-Rate-Variable and Order-Switchable Optical Multiplexing of 160-Gbit/s PRBS Data using Tunable Optical Delays," **European Conference on Optical Communications (ECOC),** paper 4.3.5, Vienna, Austria, Sept. 2009.

371. Xiaoxia Wu, Jeffrey A. Jargon, Zhensheng Jia, Loukas Paraschis, Ronald A. Skoog, and Alan E. Willner, "Optical Performance Monitoring of PSK Data Channels using Artificial Neural Networks Trained with Parameters Derived from Delay-Tap Asynchronous Diagrams via Balanced Detection," **European Conference on Optical Communications (ECOC),** paper P3.04, Vienna, Austria, Sept. 2009.

372. Earl Parsons, Hacene Chaouch, Franko Küppers, Tuomo von Lerber, Marco Mattila, Werner Weiershausen, Ari Tervonen, Jeng-Yuan Yang, and Alan Willner, "Photonic Balancing in DPSK Detection using Pulse Collision in a Semiconductor Optical Amplifier," **European Conference on Optical Communications (ECOC),** paper 2.2.5, Vienna, Austria, Sept. 2009.

373. Vahid Arbab, Xiaoxia Wu, Alan E. Willner, and Charles Weber, "Optical Performance Monitoring of Data Degradation by Evaluating the Deformation of an Asynchronously Generated I/Q Data Constellation", **European Conference on Optical Communications (ECOC),** P3.23, Vienna, Austria, Sept. 2009.

374. Xiaoxia Wu, Scott Nuccio, Omer F. Yilmaz, Jian Wang, Antonella Bogoni, and Alan E. Willner, "Controllable Optical Demultiplexing using Continuously Tunable Optical Parametric Delay at 160-Gbit/s with with <0.1-ps Resolution," **IEEE Photonics in Switching Meeting**, paper FrI2-2, Pisa, Italy, Sept. 2009 (IEEE, Piscataway, NJ, 2009.

375. J. Wang, S. R. Nuccio, X. X. Wu, O. F. Yilmaz, L. Zhang, I. Fazal, J. Y. Yang, Y. Yue, and A. E. Willner, "40-Gbit/s Optical Data Exchange Between WDM Channels using Second-Order Nonlinearities in PPLN Waveguides," **OSA Topical Meeting on Nonlinear Optics (NLO),** Post-Deadline paper PDPA1, Honolulu, Hawaii, July 2009 (Optical Society of America, Wash., D.C., 2009).

376. O.F. Yilmaz, S.R. Nuccio, Z. Bakhtiari , X. Wu, J. Wang, L. Zhang, and A.E. Willner, "Wavelength Conversion and 9-fold Multicasting of a 21.4 Gbit/s DPSK Data Channel using Supercontinuum Generation,"

REFEREED CONFERENCE PROCEEDINGS: (CONTINUED)

OSA Topical Meeting on Nonlinear Optics (NLO), Post-Deadline paper PDPA3, Honolulu, Hawaii, July 2009 (Optical Society of America, Wash., D.C., 2009).

377. Lin Zhang, Yang Yue, Yinying Xiao-Li, Ray G. Beausoleil, and Alan E. Willner, "Slot Waveguides with a Flattened Near-Zero Dispersion and a Small Effective Mode Area," **OSA Topical Meeting on Integrated Photonics and Nanophotonics Research and Applications (IPNRA),** paper IWD6, Honolulu, Hawaii, July 2009 (Optical Society of America, Wash., D.C., 2009).

378. Xiaoxia Wu, Antonella Bogoni, Omer F. Yilmaz, Scott R. Nuccio, and Alan E. Willner, "Optically Concatenated 160-to-320-Gbit/s Multiplexing using Supercontinuum Generation in Highly Nonlinear Fiber," **Conference on Lasers and Electro-Optics (CLEO)**, paper CMZ7, Baltimore, MD, May 2009 (Optical Society of America, Wash., D.C., 2009).

379. Omer F. Yilmaz, Scott R. Nuccio, Xiaoxia Wu, and Alan E. Willner, "Tunable N-Fold Multicasting and Pulsewidth of 40 Gb/s Channels by Variable Periodic Slicing of a Supercontinuum," **Conference on Lasers and Electro-Optics (CLEO)**, paper CTuJ5, Baltimore, MD, May 2009 (Optical Society of America, Wash., D.C., 2009).

380. Xiaoxia Wu, Antonella Bogoni, Scott R. Nuccio, Omer F. Yilmaz, and Alan E. Willner, "320-Gbit/s Optical Time Multiplexing of Two 160-Gbit/s channels using Supercontinuum Generation to Achieve High-Speed WDM-to-TDM," **Conference on Lasers and Electro-Optics (CLEO)**, paper,Baltimore, MD, May 2009 (Optical Society of America, Wash., D.C., 2009).

381. Lin Zhang, Yang Yue, Ray G. Beausoleil, and Alan E. Willner, "Slot Waveguides for Achieving 147-nm-wide and -31.3ps/(m·nm) Dispersion and Near-Zero Flattened Dispersion," **Conference on Lasers and Electro-Optics (CLEO)**, paper CThU2, Baltimore, MD, May 2009 (Optical Society of America, Wash., D.C., 2009).

382. S. R. Nuccio, O. F. Yilmaz, X. Wu, and A. E. Willner, "Fine (<0.5 ps) and Course Tuning (>15 ps) of Optical Delays using Acousto-optic Mixing with a 1-pm Tunable Laser," **Conference on Lasers and Electro-Optics (CLEO)**, paper CMJJ2, Baltimore, MD, May 2009 (Optical Society of America, Wash., D.C., 2009).

383. Yang Yue, Lin Zhang, Raymond Beausoleil, and Alan Willner, "Very Short Polarization Splitting/Combining using Two Horizontally-Slotted Waveguides," **Conference on Lasers and Electro-Optics (CLEO)**, paper CTuC4, Baltimore, MD, May 2009 (Optical Society of America, Wash., D.C., 2009).

384. B. Zhang, X. Zhao, D. Parekh, Y. Yue, W. Hofmann, M. Amann, C. Chang-Hasnain and A. Willner, "Multifunctional and Reconfigurable 10-GHz Operation of an Optical Injection-Locked VCSEL," **Conference on Lasers and Electro-Optics (CLEO)**, paper CTuJ7, Baltimore, MD, May 2009 (Optical Society of America, Wash., D.C., 2009).

385. Mirco Scaffardi, Gianluca Berrettini, Xiaoxia Wu, Irfan Fazal, Luca Potì, Alan E. Willner, and Antonella Bogoni, "Modulation Squeezing of a 10 Gb/s RZ and NRZ Signal with a Single SOA," **Conference on Lasers and Electro-Optics (CLEO)**, paper JTuD78, Baltimore, MD, May 2009 (Optical Society of America, Wash., D.C., 2009).

386. Omer F. Yilmaz, Scott R. Nuccio, Xiaoxia Wu, and Alan E. Willner, "10-Packet-Depth, 40 Gb/s Optical Buffer with a <0.5 ns Reconfiguration Time using 116 ns, Continuously Tunable Conversion/Dispersion Delays," **IEEE/OSA Conference on Optical Fiber Communications (OFC),** Post-Deadline paper PDPC7, San Diego, CA, Mar. 2009 (Optical Society of America, Washington, D.C., 2009).

387. S. R. Nuccio, O. F. Yilmaz, S. Khaleghi, L. Christen, I. Fazal, and A. E. Willner, "503-ns, Tunable Optical Delay of 40 Gb/s RZ-OOK and RZ-DPSK using Additional Conversion for Increased Delay and Reduced

REFEREED CONFERENCE PROCEEDINGS: (CONTINUED)

Residual Dispersion," **IEEE/OSA Conference on Optical Fiber Communications** (OFC), paper OThM7, San Diego, CA, Mar. 2009 (Optical Society of America, Washington, D.C., 2009).

388. O. F. Yilmaz, S. R. Nuccio, S. Khaleghi, J.-Y. Yang, L. Christen, and A. E. Willner, "Optical Multiplexing of Two 21.5 Gb/s DPSK Signals into a Single 43 Gb/s DQPSK Channel with Simultaneous 7-Fold Multicasting in a Single PPLN Waveguide," **IEEE/OSA Conference on Optical Fiber Communications (OFC),** paper OThM4, San Diego, CA, Mar. 2009 (Optical Society of America, Washington, D.C., 2009).

389. Lin Zhang, Yang Yue, Yinying Xiao Li, Raymond G. Beausoleil, and Alan E. Willner, "On-Chip, High-Dispersion-Value and Coupled Strip/Slotted Waveguide Structure for Efficient Dispersion Compensation," **IEEE/OSA Conference on Optical Fiber Communications (OFC),** paper OThB2, San Diego, CA, Mar. 2009 (Optical Society of America, Washington, D.C., 2009).

390. Antonella Bogoni, Xiaoxia Wu, Irfan Fazal, and Alan E. Willner, "320 Gb/s Nonlinear Operations Based on PPLN Waveguide for Multiplexing Add/Drop and Wavelength Conversion," **IEEE/OSA Conference on Optical Fiber Communications (OFC),** paper OThS5, San Diego, CA, Mar. 2009 (Optical Society of America, Washington, D.C., 2009).

391. J.-Y. Yang, L. Zhang, Y. Yue, L. C. Christen, B. Zhang, J. Jackel, A. Anjali, L. Paraschis, and A.E. Willner, "CD-Insensitive PMD Monitoring of an 80-Gb/s Polarization-Multiplexed RZ-DPSK Channel using a Polarizer and a Low-Speed Detector," **IEEE/OSA Conference on Optical Fiber Communications (OFC),** paper OTHJ2, San Diego, CA, Mar. 2009 (Optical Society of America, Washington, D.C., 2009).

392. Xiaoxia Wu, Antonella Bogoni, Omer F. Yilmaz, Scott R. Nuccio, and Alan E. Willner, "Optically Concatenated 4-Fold 40-Gbit/s Multicasting, 4-Fold 40-to-160-Gbit/s Multiplexing, and 160-to-40-Gbit/s Demultiplexing using Highly Nonlinear Fibers," **IEEE/OSA Conference on Optical Fiber Communications (OFC),** paper JThA53, San Diego, CA, Mar. 2009 (Optical Society of America, Washington, D.C., 2009).

393. Yang Yue, Lin Zhang, Muping Song, Raymond G. Beausoleil, and Alan E. Willner, "On-Chip 90-degree Polarization Rotator using Wave Coupling through an Intermediate, Multimode, Uniform Waveguide," **IEEE/OSA Conference on Optical Fiber Communications (OFC),** paper OTuL6, San Diego, CA, Mar. 2009 (Optical Society of America, Washington, D.C., 2009).

394. Lin Zhang, Muping Song, Raymond G. Beausoleil, and Alan E. Willner, "A High-Speed Silicon Modulator Based on an Embedded-Ring-Resonator Structure," **IEEE/OSA Conference on Optical Fiber Communications (OFC),** paper JWA25, San Diego, CA, Mar. 2009 (Optical Society of America, Washington, D.C., 2009).

395. Vahid R. Arbab, Xiaoxia Wu, Louis C. Christen, Jeng-Yuan Yang, Tasshi Dennis, Paul Williams, and Alan E. Willner, "Analysis of Fiber Dispersion Effects on Phase Modulated Signals using Constellation Diagram," **IEEE/OSA Conference on Optical Fiber Communications (OFC),** paper JThA45, San Diego, CA, Mar. 2009 (Optical Society of America, Washington, D.C., 2009).

396. M. Song, L. Zhang, Y. Yue, J.-Y. Yang, R. G. Beausoleil, and A.E. Willner, "A 2X2 Optical Cross-Connect Switch Based on Dual-Drive Silicon Microring-Resonators with Reduced Timing Jitter and Driving Voltage," **IEEE/OSA Conference on Optical Fiber Communications (OFC),** paper OWV5, San Diego, CA, Mar. 2009 (Optical Society of America, Washington, D.C., 2009).

397. Devang Parekh, Bo Zhang, Xiaoxue Zhao, Yang Yue, Werner Hofmann, Markus C. Amann, Alan E. Willner, and Connie J. Chang-Hasnain, "90-km Single-Mode Fiber Transmission of 10-Gb/s Multimode VCSELs under Optical Injection Locking," **IEEE/OSA Conference on Optical Fiber Communications (OFC),** paper OTuK7, San Diego, CA, Mar. 2009 (Optical Society of America, Washington, D.C., 2009).

REFEREED CONFERENCE PROCEEDINGS: (CONTINUED)

398. Jeffrey A. Jargon, Xiaoxia Wu, and Alan E. Willner, "Optical Performance Monitoring by Use of Artificial Neural Networks Trained with Parameters Derived from Delay-Tap Asynchronous Sampling," **IEEE/OSA Conference on Optical Fiber Communications (OFC),** paper OThH1, San Diego, CA, Mar. 2009 (Optical Society of America, Washington, D.C., 2009).

399. Antonella Bogoni, Xiaoxia Wu, Irfan Fazal, and Alan E. Willner, "All-Optical Time Domain 160 Gb/s ADD/ DROP Based on Pump Depletion and Nonlinearities in a Single PPLN Waveguide," **IEEE/OSA Conference on Optical Fiber Communications (OFC),** paper JThA59, San Diego, CA, Mar. 2009 (Optical Society of America, Washington, D.C., 2009).

400. Bo Zhang, X. Steve Yao, Xiaojun Chen, and Alan E. Willner, "Polarization-based Fast-Swept Optical Spectrum Analyzer," **IEEE/OSA Conference on Optical Fiber Communications (OFC),** paper OMP2, San Diego, CA, Mar. 2009 (Optical Society of America, Washington, D.C., 2009).

401. Jeffrey A. Jargon, Xiaoxia Wu, Paul D. Hale, Klaus M. Engenhardt, and Alan E. Willner, "A Transmitter for Calibrating the Extinction Ratio of Optical Receivers," **IEEE/OSA Conference on Optical Fiber Communications (OFC),** paper JWA24, San Diego, CA, Mar. 2009 (Optical Society of America, Washington, D.C., 2009).

402. X. Steve Yao, Bo Zhang, Xiaojun Chen, and Alan E. Willner, "Polarimeter-Based Optical Spectrum Analyzer," **OSA Frontiers in Optics** (FiO) Annual Meeting, Post-Deadline Paper PDP-A4, Rochester, NY, Oct. 2008 (Optical Society of America, Washington, D.C., 2008).

403. J.-Y. Yang, L. Zhang, Y. Yue, V. R. Arbab, A. Agarwal, L. Paraschis, and A. E. Willner, "CD/PMD-Insensitive Optical Performance Monitoring of OSNR Degradation in an 80-Gb/s Pol-Muxed RZ-DPSK System,"**IEEE Lasers and Electro-Optics Society Annual Meeting 2008**, paper WP3, Newport Beach, CA, Nov. (IEEE, Piscataway, NJ, 2008).

404. Xiaoxia Wu, Jeffrey Jargon, Louis Christen, and Alan Willner, "Training of Neural Networks to Perform Optical Performance Monitoring of a Combination of Accumulated Signal Nonlinearity, CD, PMD, and OSNR," **IEEE Lasers and Electro-Optics Society Annual Meeting 2008**, paper WP4, Newport Beach, CA, Nov. (IEEE, Piscataway, NJ, 2008).

405. Louis Christen, Omer Yilmaz, Scott Nuccio, Xiaoxia Wu, Alan. E. Willner, "Optical Pseudo-Random Bit Sequence Generator using a Dual-Drive Mach-Zehnder Modulator as a Linear Feedback Shift Register," **IEEE Lasers and Electro-Optics Society Annual Meeting 2008**, paper TuP3, Newport Beach, CA, Nov. (IEEE, Piscataway, NJ, 2008).

406. M. Song, L. Zhang, R.G. Beausoleil and A.E. Willner, "Generation of High-Modulation-Index RF Analog Signals using a Silicon Microring Resonator," **IEEE Lasers and Electro-Optics Society Annual Meeting 2008**, paper MB2, Newport Beach, CA, Nov. (IEEE, Piscataway, NJ, 2008).

407. Wei-Ren Peng, Kai-Ming Feng, and Alan E. Willner, "Direct-Detected Polarization Division Multiplexed OFDM Systems with Self-Polarization Diversity," **IEEE Lasers and Electro-Optics Society Annual Meeting 2008**, paper MH3, Newport Beach, CA, Nov. (IEEE, Piscataway, NJ, 2008).

408. M. Song, L. Zhang, L. Zou, J.-Y. Yang, R.G. Beausoleil and A.E. Willner, "A Three-Ring-Resonator Electro-Optical Switch with Reduced Jitter and Enhanced Speed and Extinction Ratio," **IEEE Lasers and Electro-Optics Society Annual Meeting 2008**, paper WF2, Newport Beach, CA, Nov. (IEEE, Piscataway, NJ, 2008).

409. Wei-Ren Peng, Kai-Ming Feng, and Alan E. Willner, "The Limit of Transmission Distance for an Inter-Symbol-Interference-Free Optical OFDM System," **IEEE Lasers and Electro-Optics Society Annual Meeting 2008**, paper MH2, Newport Beach, CA, Nov. (IEEE, Piscataway, NJ, 2008).

REFEREED CONFERENCE PROCEEDINGS: (CONTINUED)

410. Xiaoxia Wu, Jeffrey Jargon, Louis Christen, Alan Willner, and Loukas Paraschis, "Monitoring I/Q Data and Pulse Carving Misalignments in RZ-DQPSK Transmitters using a Neural Network Approach," **IEEE Lasers and Electro-Optics Society Annual Meeting 2008**, paper WP2, Newport Beach, CA, Nov. (IEEE, Piscataway, NJ, 2008).

411. A. Bogoni, X. Wu, I. Fazal, and A.E. Willner, "All-Optical 160Gb/s Half-Addition, Half-Subtraction and OR Function Exploiting PumpDepletion and Nonlinearities in a PPLN Waveguide,"**European Conference on Optical Communications (ECOC), *PostDeadline***, paper Th.3.E.7, Brussels, Sept. 2008.

412. Wei-Ren Peng, Bo Zhang, XiaoXia Wu, Kai-Ming Feng, Alan E. Willner and Sien Chi, "Experimental Demonstration of 1600 km SSMF Transmission of a Generalized Direct Detection Optical Virtual SSB-OFDM System," **European Conference on Optical Communications (ECOC),** paper Mo.3.E.6, Brussels, Sept. 2008.

413. Xiaoxia Wu, Jeffrey Jargon, Alan E. Willner, "Off-Line Monitoring of OSNR/CD/PMD Degradation Effects using Neural-Network-Based Training Sequences,"**European Conference on Optical Communications (ECOC),** paper We.3.D.6, Brussels, Sept. 2008.

414. Wei-Ren Peng, Bo Zhang, XiaoXia Wu, Kai-Ming Feng, Alan E. Willner and Sien Chi, "Experimental Demonstration of Compensating the I/Q Imbalance and Bias Deviation of the Mach-Zehnder Modulator for an RF Tone Assisted Optical OFDM System,"**European Conference on Optical Communications (ECOC),** paper Mo.4.D.3, Brussels, Sept. 2008.

415. Lin Zhang, Muping Song, Jeng-Yuan Yang, Wei-Ren Peng, Scott Nuccio, Raymond G. Beausoleil and Alan E. Willner, "Generating Spectrally Efficient Duobinary Data Format from Silicon Ring Resonator Modulators"**European Conference on Optical Communications (ECOC),** paper Tu.3.C.4, Brussels, Sept. 2008.

416. S.R. Nuccio, L. Christen, X. Wu, S. Khaleghi, O. Yilmaz, A.E. Willner, and Y. Koike, "Transmission of 40 Gb/s DPSK and OOK at 1.55 microns Through 100 m of Plastic Optical Fiber,"**European Conference on Optical Communications (ECOC),** paper We.2.A.4, Brussels, Sept. 2008.

417. Xiaoxia Wu, Wei-Ren Peng, Vahid R. Arbab, Alan E. Willner, "Tunable Optical Wavelength Conversion of a 10 Gb/s OFDM Data Signal using a Periodically-Poled Lithium Niobate Waveguide,"**European Conference on Optical Communications (ECOC),** paper P.3.1, Brussels, Sept. 2008.

418. Vahid R. Arbab, Wei-Ren Peng, Xiaoxia Wu, Jeng-Yuan Yang, Salman Khaleghi, Yang Yue, Alan E. Willner, "Experimental Demonstration of Multicarrier-CDMA for Passive Optical Networks,"**European Conference on Optical Communications (ECOC),** paper We.1.F.1, Brussels, Sept. 2008.

419. Reza Salem, Scott Nuccio, Vahid R. Arbab, Xiaoxia Wu, Mark A. Foster, David F. Geraghty, Alan E. Willner, and Alexander L. Gaeta, "Experimental Demonstration of a High-Speed Optical Correlator for Phase-Modulated Packets,"**European Conference on Optical Communications (ECOC),** paper P.3.15, Brussels, Sept. 2008.

420. Muping Song, Lin Zhang, Jeng-Yuan Yang, Scott Nuccio, Raymond G. Beausoleil, and Alan E. Willner, "Performance Prospects of Compact Silicon Microring-Based Electro-Optic Modulator for Analog Optical Links,"**European Conference on Optical Communications (ECOC),** paper P.2.5, Brussels, Sept. 2008.

421. Lin Zhang, Muping Song, Jeng-Yuan Yang, Scott Nuccio, Raymond G. Beausoleil, and Alan E. Willner, "A Compact Chromatic Dispersion Compensator using Unequal and Mutually-Coupled Microring Resonators," **OSA Summer Topical Meeting on Integrated Photonics and Nanophotonics Research and Applications (IPNRA)**, paper IWA3, Boston, MA, July 2008 (OSA, D.C., 2008).

REFEREED CONFERENCE PROCEEDINGS: (CONTINUED)

422. L. Zhang, J.-Y. Yang, M. Song, Y. Li, R.G. Beausoleil, A. E. Willner, "Advanced Data Formats in Chip-Scale Optical Interconnects using Microring Resonators," **19th Annual IEEE Workshop on Interconnections within High Speed Digital Systems**, Santa Fe, NM, May 2008 (IEEE, Piscataway, 2008).

423. Lin Zhang, Yunchu Li, Muping Song, Teng Wu, Raymond G. Beausoleil, and Alan E. Willner, "Novel Filtering Function using an Embedded Ring Resonator," **Conference on Lasers and Electro-Optics (CLEO)**, paper CWP5, San Jose, CA, May 2008 (Optical Society of America, Wash., D.C., 2008).

424. Wei-Ren Peng, Kai-Ming Feng, Sien Chi, and Alan E. Willner, "Bit Error Rate Calculation for a Single Sideband OFDM Signal with Direct Detection Optically Pre-Amplified Receivers," **Conference on Lasers and Electro-Optics (CLEO)**, paper CWN3, San Jose, CA, May 2008 (Optical Society of America, Wash., D.C., 2008).

425. Lin Zhang, Yunchu Li, Jeng-Yuan Yang, Raymond G. Beausoleil, and Alan E. Willner, "Creating RZ Data Modulation Formats using Parallel Silicon Microring Modulators for Pulse Carving in DPSK," **Conference on Lasers and Electro-Optics (CLEO)**, paper CWN4, San Jose, CA, May 2008 (Optical Society of America, Wash., D.C., 2008).

426. Xiaoxue Zhao, Bo Zhang, Louis Christen, Devang Parekh, Fumio Koyama, Werner Hofmann, Markus C. Amann, Alan E. Willner, and Connie J. Chang-Hasnain, "Data Inversion and Adjustable Chirp in 10-Gbps Directly-Modulated Injection-Locked 1.55-µm VCSELs," **Conference on Lasers and Electro-Optics (CLEO)**, paper CMW5, San Jose, CA, May 2008 (Optical Society of America, Wash., D.C., 2008).

427. Yunchu Li, Lin Zhang, Raymond G. Beausoleil, and Alan E. Willner, "Ring Resonator Induced Data Timing Skew in On-Chip WDM Optical Interconnects," **Conference on Lasers and Electro-Optics (CLEO)**, paper JWA91, San Jose, CA, May 2008 (Optical Society of America, Wash., D.C., 2008).

428. L. Christen, I. Fazal, O.F. Yilmaz, X. Wu, S. Nuccio, A.E. Willner, C. Langrock, and M.M. Fejer, "Tunable 105-ns Optical Delay for 80-Gbit/s RZ-DQPSK, 40-Gbit/s RZ-DPSK, and 40-Gbit/s RZ-OOK Signals using Wavelength Conversion and Chromatic Dispersion,"**IEEE/OSA Conference on Optical Fiber Communications (OFC),** paper OTuD1, San Diego, CA, Feb. 2008 (Optical Society of America, Washington, D.C., 2008).

429. J.-Y. Yang, L. Zhang, T. Wu, X. Wu, L. C. Christen, S. Nuccio, O. F. Yilmaz, W.-R. Peng, and A.E. Willner, "Chromatic Dispersion Monitoring of 40-Gb/s RZ-DPSK and 80-Gb/s RZ-DQPSK Data using Cross-Phase Modulation in Highly-Nonlinear Fiber and a Simple Power Monitor,"**IEEE/OSA Conference on Optical Fiber Communications (OFC),** paper OTuG5, San Diego, CA, Feb. 2008 (Optical Society of America, Washington, D.C., 2008).

430. L. Christen, O. F. Yilmaz, S. Nuccio, X. Wu, I. Fazal, A. E. Willner, "Tunable Time-Slot-Interchange of 40-Gb/s Optical Packets using Conversion/Dispersion-Based Tunable 100-ns Delays,"**IEEE/OSA Conference on Optical Fiber Communications (OFC),** paper OThA4, San Diego, CA, Feb. 2008 (Optical Society of America, Washington, D.C., 2008).

431. Xiaoxia Wu, Louis Christen, Scott R. Nuccio, Omer Faruk Yilmaz, Loukas Paraschis, Yannick Keith Lize, and Alan E. Willner, "Experimental Synchronization Monitoring of I/Q Data and Pulse-Carving Temporal Misalignment for a Serial-Type 80-Gbit/s RZ-DQPSK Transmitter,"**IEEE/OSA Conference on Optical Fiber Communications (OFC),** paper OTuG2, San Diego, CA, Feb. 2008 (Optical Society of America, Washington, D.C., 2008).

432. Bo Zhang, Xiaoxue Zhao, Louis Christen, Devang Parekh, Werner Hoffman, Ming C. Wu, Markus C. Amann, Connie J. Chang-Hasnain, and Alan E. Willner, "Adjustable Chirp Injection-Locked 1.55-µm VCSELs for Enhanced Chromatic Dispersion Compensation at 10-Gbit/s,"**IEEE/OSA Conference on Optical Fiber**

REFEREED CONFERENCE PROCEEDINGS: (CONTINUED)

Communications (OFC) '08, paper OWT7, San Diego, CA, Feb. 2008 (Optical Society of America, Washington, D.C., 2008).

433. Lin Zhang, Jeng-Yuan Yang, Yunchu Li, Raymond G. Beausoleil, and Alan E. Willner, "Silicon Microring-Resonator-Based Modulation and Demodulation of DQPSK Signals,"**IEEE/OSA Conference on Optical Fiber Communications (OFC),** paper OWL5, San Diego, CA, Feb. 2008 (Optical Society of America, Washington, D.C., 2008).

434. Wei-Ren Peng, Xiaoxia Wu, Vahid R. Arbab, Bishara Shamee, Jeng-Yuan Yang, Louis C. Christen, Kai-Ming Feng, Alan E. Willner and Sien Chi, "Experimental Demonstration of 340 km SSMF Transmission using a Virtual Single Sideband OFDM Signal that Employs Carrier Suppressed and Iterative Detection Techniques,"**IEEE/OSA Conference on Optical Fiber Communications (OFC),** paper OMU1, San Diego, CA, Feb. 2008 (Optical Society of America, Washington, D.C., 2008).

435. Lin Zhang, Yunchu Li, Muping Song, Raymond G. Beausoleil, and Alan E. Willner, "DPSK Data Quality Dependencies in Microring-Based Transmitter and Receiver,"**IEEE/OSA Conference on Optical Fiber Communications (OFC),** paper JThA19, San Diego, CA, Feb. 2008 (Optical Society of America, Washington, D.C., 2008).

436. Wei-Ren Peng, Xiaoxia Wu, Vahid R. Arbab, Bishara Shamee, Louis C. Christen, Jeng-Yuan Yang, Kai-Ming Feng, Alan E. Willner, and Sien Chi, "Experimental Demonstration of a Coherently Modulated and Directly Detected Optical OFDM System using an RF-Tone Insertion,"**IEEE/OSA Conference on Optical Fiber Communications (OFC),** paper OMU2, San Diego, CA, Feb. 2008 (Optical Society of America, Washington, D.C., 2008).

437. Y. Li, L. Zhang, M. Song, Y. Yue, R.G. Beausoleil, and A.E. Willner, "Enhanced Performance and Flexibility in Silicon Modulators Based on a Coupled-Ring-Resonator Structure,"**IEEE/OSA Conference on Optical Fiber Communications (OFC),** paper JThA35, San Diego, CA, Feb. 2008 (Optical Society of America, Washington, D.C., 2008).

438. Xiaoxia Wu, Louis Christen, Jeng-Yuan Yang, Scott R. Nuccio, Alan Willner, and Loukas Paraschis, "40-GHz CSRZ Optical Pulse Generation using a 10-GHz Mach-Zehnder Modulator and a 25-ps Delay Line Interferometer,"**IEEE Lasers and Electro-Optics Society Annual Meeting 2007**, paper ThX3, Orlando, Oct. (IEEE, Piscataway, NJ, 2007).

439. Lin Zhang, Jengyuan Yang, Muping Song, Yunchu Li, Bo Zhang, Ray G. Beausoleil, and Alan E. Willner, "Ultra Small Modulator and Demodulator for Differential Phase-Shift-Keying Data Format Based on Silicon Microrings,"**IEEE Lasers and Electro-Optics Society Annual Meeting 2007**, paper ThU5, Orlando, Oct. (IEEE, Piscataway, NJ, 2007).

440. Louis Christen, Scott R. Nuccio, Xiaoxia Wu, Alan E. Willner, and Loukas Paraschis, "Experimental Demonstration of Reduced Complexity 43-Gb/s RZ-DQPSK Rate-Tunable Receiver," **European Conference on Optical Communications (ECOC),** paper Th9.3.3, Berlin, Sept. 2007.

441. B. Zhang, L. Zhang, L.-S. Yan, I. Fazal, J.-Y. Yang, and A.E. Willner, "Variable-Bit-Rate, Continuously-Controllable Optical TDM using SBS-Based Slow Light Tunable Delay Line," **European Conference on Optical Communications (ECOC),** paper We8.2.4, Berlin, Sept. 2007.

442. J.-Y. Yang, L. Zhang, L.C. Christen, B. Zhang, S. Nuccio, X. Wu, L.-S. Yan, S. Yao and A.E. Willner, "Chromatic-Dispersion-Insensitive PMD Monitoring of 20-Gb/s DQPSK and 10-Gb/s DPSK using DGD-Generated Polarization-Based Interferometer Filter," **European Conference on Optical Communications (ECOC),** paper Tu3.5.3, Berlin, Sept. 2007.

REFEREED CONFERENCE PROCEEDINGS: (CONTINUED)

443. B. Zhang, L.-S. Yan, L. Zhang, S. Nuccio, L. Christen, T. Wu, and A.E. Willner, "Experimental Demonstration of Slow Light on RZ-DQPSK Signals," **European Conference on Optical Communications (ECOC),** paper Th9.4.4, Berlin, Sept. 2007.

444. Xiaoxia Wu, Louis Christen, Bo Zhang, Jeng-Yuan Yang, Lin Zhang, Scott R. Nuccio, Alan E. Willner, and Loukas Paraschis, "Experimental Synchronization Monitoring of I/Q Misalignment and Pulse Carving Misalignment in 20-Gbit/s RZ-DQPSK Data Generation," **European Conference on Optical Communications (ECOC),** paper Tu3.5.5, Berlin, Sept. 2007.

445. Irfan Fazal, Omer Yilmaz, Scott Nuccio, Bo Zhang, Carsten Langrock, Martin Fejer and Alan Willner, "Experimental Time-Slot-Interchange Data Packet Switching using a Reconfigurable and Continuously-Tunable Optical 24-ns Delay Based on Wavelength Conversion and Inter-channel Chromatic Dispersion," **European Conference on Optical Communications (ECOC),** paper P066, Berlin, Sept. 2007.

446. B. Zhang, L.-S. Yan, L. Zhang, A. E. Willner, Z. Zhu, and D.J. Gauthier, "Broadband SBS Slow Light using Simple Spectrally-Sliced Pumping," **European Conference on Optical Communications (ECOC),** paper P0025, Berlin, Sept. 2007.

447. L. Christen, S. Nuccio, Y.K. Lize, A.E. Willner, and L. Paraschis, "Simultaneous Balanced DPSK Demodulation of Multiple 40 Gbit/s WDM Channels using a Single Periodic FBG," **Conference on Lasers and Electro-Optics (CLEO)**, paper CMJJ3, Baltimore, MD, May 2007 (Optical Society of America, Wash., D.C., 2007).

448. Yannick Keith Lize, Mathieu Faucher, Érick Jarry, Patrick Ouellette, Alexandre Wetter, Raman Kashyap, Alan E. Willner, "Low-Loss S-, C- and L-band Differential Phase Shift Keying Demodulator," **Conference on Lasers and Electro-Optics (CLEO)**, paper CMJJ4, Baltimore, MD, May 2007 (Optical Society of America, Wash., D.C., 2007).

449. L. Christen, S. Nuccio, X. Wu, A.E. Willner, "Polarization-Based 43 Gb/s RZ-DQPSK Receiver Design Employing a Single Delay-Line Interferometer," **Conference on Lasers and Electro-Optics (CLEO)**, paper CMJJ6, Baltimore, MD, May 2007 (Optical Society of America, Wash., D.C., 2007).

450. B. Zhang, L.-S. Yan, J.-Y. Yang, I. Fazal, A.E. Willner, "Independent Delay Control and Synchronization of Multiple 2.5-Gb/s Channels within a Single SBS Slow-Light Medium," **Conference on Lasers and Electro-Optics (CLEO)**, paper CTuB4, Baltimore, MD, May 2007 (Optical Society of America, Wash., D.C., 2007).

451. L. Christen, S. Nuccio, Y.K. Lize, N. Jayachandran, A. E. Willner, L. Paraschis, "Stabilization of a 40 Gb/s DPSK Delay-Line Interferometer using Half Bit-Rate AM Pilot Tone Monitoring," **Conference on Lasers and Electro-Optics (CLEO)**, paper CMJJ2, Baltimore, MD, May 2007 (Optical Society of America, Wash., D.C., 2007).

452. Yannick Keith Lize, Louis Christen, Scott Nuccio, Xiaoxia Wu, Alan E. Willner, Raman Kashyap, and Mathieu Faucher, "Optical Error Correction using Passive Optical Logic Gates Demodulators in Differential Demodulation," **Conference on Lasers and Electro-Optics (CLEO)**, Baltimore, MD, May 2007 (Optical Society of America, Wash., D.C., 2007).

453. L.-S. Yan, B. Zhang, A. Belisle, A.E. Willner, and X. Steve Yao, "Automatic All-Optical Detection in Polarization-Division-Multiplexing System using Power Unbalanced Transmission," **Conference on Lasers and Electro-Optics (CLEO)**, paper CMJJ5, Baltimore, MD, May 2007 (Optical Society of America, Wash., D.C., 2007).

454. B. Zhang, I. Fazal, L.-S. Yan, L. Zhang, A.E. Willner, Z. Zhu, and D.J. Gauthier, "System Performance of DPSK Signals Transmitted Through Broadband SBS-based Slow Light Element and Reduction of Slow-Light

REFEREED CONFERENCE PROCEEDINGS: (CONTINUED)

Induced Data-Pattern Dependence," **IEEE/OSA Conference on Optical Fiber Communications** (OFC) '07, paper OThD2, Anaheim, CA, March 2007 (Optical Society of America, Washington, D.C., 2007).

455. Y.K. Lizé, J.-Y. Yang, L.C. Christen, X.-X. Wu, S. Nuccio, T. Wu, A.E. Willner, R. Kashyap, and F. Séguin, "Simultaneous and Independent Monitoring of OSNR, Chromatic and Polarization Mode Dispersion for NRZ-OOK, DPSK and Duobinary,"**IEEE/OSA Conference on Optical Fiber Communications** (OFC) '07, paper OThN2, Anaheim, CA, March 2007 (Optical Society of America, Washington, D.C., 2007).

456. L.C. Christen, Y.K. Lize, S. Nuccio, A.E. Willner, and L. Paraschis, "Enhanced Sensitivity and Compensation of Transmission Impairments using Multi-Bit DPSK Error Correction,"**IEEE/OSA Conference on Optical Fiber Communications** (OFC) '07, paper JThA50, Anaheim, CA, March 2007 (Optical Society of America, Washington, D.C., 2007).

457. L.-S. Yan, B. Zhang, X. Yao and A.E. Willner, "All-Fiber PMD Emulator with Reduced Number of Polarization Controllers between Sections,"**IEEE/OSA Conference on Optical Fiber Communications (OFC),** paper OTuN4, Anaheim, CA, March 2007 (Optical Society of America, Washington, D.C., 2007).

458. S. Kumar and A.E. Willner, "High-Speed Phase-Correlated Signal Generation by Phase-Reconstruction of OTDM Signals through Differential Cross-Phase Modulation in an SOA-MZI,"**IEEE/OSA Conference on Optical Fiber Communications (OFC),** paper JThA37, Anaheim, CA, March 2007 (Optical Society of America, Washington, D.C., 2007).

459. V.R. Arbab, P. Saghari, N.M. Jayachandran, and A.E. Willner, "Variable Bit Rate Optical CDMA Networks using Multiple Pulse Position Modulation,"**IEEE/OSA Conference on Optical Fiber Communications (OFC),** paper OMO6, Anaheim, CA, March 2007 (Optical Society of America, Washington, D.C., 2007).

460. L. Zhang, Y. Li, J.-Y. Yang, B. Zhang, R. Beausoleil, and A.E. Willner, "Performance and Design Guidelines for 10-Gbit/s Systems using Silicon-Based Ring-Resonator Modulators,"**IEEE/OSA Conference on Optical Fiber Communications (OFC),** paper JWA6, Anaheim, CA, March 2007 (Optical Society of America, Washington, D.C., 2007).

461. P. Saghari, R. Omrani, V.R. Arbab, A.E. Willner, and P.V. Kumar, "Increasing the Number of Users in an Optical CDMA System by Pulse-Position Modulation,"**IEEE/OSA Conference on Optical Fiber Communications (OFC),** paper JThA73, Anaheim, CA, March 2007 (Optical Society of America, Washington, D.C., 2007).

462. M. Nazarathy, Y. Yadin, M. Orenstein, Y.K. Lize, L.C. Christen, and A.E. Willner, "Enhanced Self-Coherent Optical Decision-Feedback-Aided Detection of Multi-Symbol M-DPSK/PolSK,"**IEEE/OSA Conference on Optical Fiber Communications (OFC),** paper JWA43, Anaheim, CA, March 2007 (Optical Society of America, Washington, D.C., 2007).

463. L. Christen, Y.K. Lize, S. Nuccio, J.-Y. Yang, N. Jayachandran, P. Ebrahimi, A.E. Willner, R. Kashyap, and Loukas Paraschis, "Multi-format Continuously Variable Bitrate DPSK/OOK Demodulating Receiver Design," **European Conference on Optical Communications (ECOC),** paper Tu3.2.4, Cannes, France, Sept. 2006.

464. Y.K. Lize, L. Christen, S. Nuccio, P. Saghari, R. Gomma, J.-Y. Yang, A.E. Willner, R. Kashyap, and L. Paraschis, "Power Penalty in Multibit Differential Phase Shift Keying Demodulation,"**European Conference on Optical Communications (ECOC),** paper Tu3.2.3, Cannes, France, Sept. 2006.

465. L. Christen, Y.K. Lize, N. Jayachandran, S. Nuccio, P. Saghari, A.E. Willner, and L. Paraschis, "Receiver-Based Temporal Pulse Carving of DPSK Bits for 20 Gbit/s Time-Multiplexed and Time-Interleaved

REFEREED CONFERENCE PROCEEDINGS: (CONTINUED)

Systems,"**European Conference on Optical Communications (ECOC),** paper We3.P90, Cannes, France, Sept. 2006.

466. Y.K. Lize, L. Christen, P. Saghari, S. Nuccio, A.E. Willner, R. Kashyap, and L. Paraschis, "Implication of Chromatic Dispersion on Frequency Offset and Bit Delay Mismatch in DPSK Demodulation,"**European Conference on Optical Communications (ECOC),** paper Mo3.2.5, Cannes, France, Sept. 2006.

467. V.R. Arbab, P. Saghari, M. Haghi, R. Omrani, A.E. Willner, and P.V. Kumar, "Demonstration of Double Pulse Position Modulation (2-PPM) in Time-Wavelength Optical CDMA Systems,"**European Conference on Optical Communications (ECOC),** paper Tu4.2.5, Cannes, France, Sept. 2006.

468. Y.K. Lize, L. Christen, J.-Y. Yang, P. Saghari, S. Nuccio, A.E. Willner, and R. Kashyap, "Simultaneous Monitoring of Chromatic Dispersion and PMD for OOK and DPSK using Partial-Bit-Delay-Assisted Clock Tone Detection,"**European Conference on Optical Communications (ECOC),** paper Mo4.4.7, Cannes, France, Sept. 2006.

469. M. Haghi, P. Saghari, V.R. Arbab, P. Ebrahimi, and Alan Eli Willner, "Differential-Pulse-Position-Modulation (DPPM) in OCDMA Networks to Achieve Higher Data-Rate/User,"**European Conference on Optical Communications (ECOC),** paper Th3.6.1, Cannes, France, Sept. 2006.

470. Louis Christen, Yannick Keith Lize, Scott Nuccio, Jeng-Yuan Yang, Poorya Saghari, Alan.E. Willner, and Loukas Paraschis, "Fiber Bragg Grating Balanced DPSK Demodulation," **IEEE Lasers and Electro-Optics Society Annual Meeting 2006**, paper WP2, Montreal, Nov. (IEEE, Piscataway, NJ, 2006).

471. Yannick Keith Lize, Robert Gomma, Raman Kashyap, Leigh Palmer, and A.E. Willner , "Low-Cost Polarization Scrambling using a Single Re-Entrant Polarization Controller," **IEEE Lasers and Electro-Optics Society Annual Meeting 2006**, paper ThH5, Montreal, Nov. (IEEE, Piscataway, NJ, 2006).

472. Yannick Keith Lize, Bryan Burgoyne, Xavier Daxhelet, Alan E. Willner, and Raman Kashyap, "Linear Effective Index Contribution to the Enhancement of Nonlinear Coefficient in Silica Nanowires," **OSA Annual Meeting Frontiers in Optics**, paper FWE5, Rochester, Oct. 2006 (OSA, D.C., 2006).

473. Daniel J. Gauthier, Zhaoming Zhu, Andrew M.C. Dawes, Lin Zhang and Alan E. Willner, "Optimizing Broadband SBS Slow Light in an Optical Fiber," **Laser Science XXII** (co-located with the OSA Annual Meeting), paper LMF4, Rochester, Oct. 2006 (OSA, D.C., 2006).

474. L.C. Christen and A.E. Willner, "System Sensitivity of Multi-Level 16-QAM and QPSK to Transmitter Imperfections in Different Modulator Designs," **OSA Topical Meeting on Coherent Optical Technologies and Applications** (COTA), paper CThC3, June 2006, Whistler, Canada (OSA, D.C., 2006).

475. P. Vijay Kumar, Reza Omrani, Joe Touch, Alan E. Willner and Poorya Saghari, "A Novel Optical CDMA Modulation Scheme: Code Cycle Modulation," **Globecom**, San Francisco, Nov. 2006 (IEEE, Piscataway, NJ, 2006).

476. Andrew Stapleton, Stephen Farrell, Louis Christen, Zhen Peng, Alan Willner, John O'Brien, and Daniel Dapkus, "Electrically Tunable Chip-Scale Semiconductor Microdisk Phase Modulators," **OSA Topical Meeting on Integrated Photonics Research and Applications** (IPRA), paper ITuB6, Connecticut, April 2006 (OSA, D.C., 2006).

477. B. Zhang, D. Leuenberger, M.-C. M. Lee, S. Hu, M. Haghi, A.E. Willner, and M.C. Wu, "Error-Free Data Transmission Through a Tunable-Bandwidth Filter Based on MEMS-Actuated Microdisk Resonator," **Conference on Lasers and Electro-Optics (CLEO)**, paper CFC3, Long Beach, CA, May 2006 (Optical Society of America, Wash., D.C., 2006).

REFEREED CONFERENCE PROCEEDINGS: (CONTINUED)

478. Y. Wang, S. Hu, L.-S. Yan, and A.E. Willner, "Optical Performance Monitoring of Chromatic Dispersion and PMD for Multi-level Intensity and Phase Modulation," **Conference on Lasers and Electro-Optics (CLEO)**, paper CThE4, Long Beach, CA, May 2006 (Optical Society of America, Wash., D.C., 2006).

479. P. Saghari, M. Haghi, V.R. Arbab, S. Kumar, R. Gholizadeh, A.E. Willner, V.P. Kumar, and J.D. Touch, "Experimental Demonstration of Code Position Modulation in an O-CDMA System to Increase the Number of Users," **Conference on Lasers and Electro-Optics (CLEO)**, paper CWH3, Long Beach, CA, May 2006 (Optical Society of America, Wash., D.C., 2006).

480. S. Kumar, B. Zhang, E. Pakbaznia, J.E. McGeehan, and A.E. Willner, "Effect of Operational Parameters and their Interplay in Differential Cross-Phase-Modulation Wavelength Converters," **Conference on Lasers and Electro-Optics (CLEO)**, paper CMT5, Long Beach, CA, May 2006 (Optical Society of America, Wash., D.C., 2006).

481. T. Luo, L. Zhang, W. Zhang, C. Yu, and A.E. Willner, "Reduction of Pattern Dependent Distortion on Data in an SBS-Based Slow Light Fiber Element by Detuning the Channel Away from the Gain Peak," **Conference on Lasers and Electro-Optics (CLEO)**, paper CThCC4, Long Beach, CA, May 2006 (Optical Society of America, Wash., D.C., 2006).

482. L. Zhang, T. Luo, and A.E. Willner, "Index-Guiding Holey Fiber with High Group Birefringence," **Conference on Lasers and Electro-Optics (CLEO)**, paper CMM3, Long Beach, CA, May 2006 (Optical Society of America, Wash., D.C., 2006).

483. Z. Zhu, A.M.C. Dawes, D.J. Gauthier, L. Zhang, and A.E. Willner, "12-GHz-Bandwidth SBS Slow Light in Optical Fibers," **IEEE/OSA Conference on Optical Fiber Communications** (OFC) '06, Post-Deadline paper PDP1, Anaheim, CA, March 2006 (Optical Society of America, Washington, D.C., 2006).

484. P. Saghari, P. Kamath, V.R. Arbab, M. Haghi, A.E. Willner, J.A. Bannister, and J.D. Touch "Experimental Demonstration of an Interference-Avoidance-Based Protocol for O-CDMA Networks," **IEEE/OSA Conference on Optical Fiber Communications** (OFC) '06, Post-Deadline paper PDP46, Anaheim, CA, March 2006 (Optical Society of America, Washington, D.C., 2006).

485. S. Kumar, B. Zhang, and A.E. Willner, "Elimination of Data Pattern Dependence in SOA-based Differential-Mode Wavelength Converters using Optically-Induced Birefringence,"**IEEE/OSA Conference on Optical Fiber Communications** (OFC) '06, paper OThB3, Anaheim, CA, March 2006 (Optical Society of America, Washington, D.C., 2006).

486. L. Zhang, T. Luo, W. Zhang, C. Yu, Y. Wang and A.E. Willner, "Optimizing Operating Conditions to Reduce Data Pattern Dependence Induced by Slow Light Elements,"**IEEE/OSA Conference on Optical Fiber Communications** (OFC) '06, paper OFP7, Anaheim, CA, March 2006 (Optical Society of America, Washington, D.C., 2006).

487. S. Kumar, P. Saghari, P. Ebrahimi, M. Haghi, V.R. Arbab, and A.E. Willner, "Experimental Demonstration of All-Optical "Missing Chip Detection" to Alleviate Near-Far Effect in O-CDMA Systems,"**IEEE/OSA Conference on Optical Fiber Communications** (OFC) '06, paper OTHM1, Anaheim, CA, March 2006 (Optical Society of America, Washington, D.C., 2006).

488. I. Fazal, S. Kumar, P. Saghari, L.C. Christen, Y. Li, and A.E. Willner, "Data-Polarization-Insensitive Wavelength Conversion in a PPLN Waveguide by Cross-Polarization-Modulation of the Pump using an SOA,"**IEEE/OSA Conference on Optical Fiber Communications** (OFC) '06, paper OTHB4, Anaheim, CA, March 2006 (Optical Society of America, Washington, D.C., 2006).

REFEREED CONFERENCE PROCEEDINGS: (CONTINUED)

489. L. Christen, I. Fazal, M. Giltrelli, Y. Wang, L. Yan, A.E. Willner, L. Paraschis, and S. Yao, "PMD and CD Sensitivity Enhancement in Directly Modulated Transmission Systems through RZ DM-DPSK," **European Conference on Optical Communications (ECOC),** paper Th2.2.4, Glasgow, Scotland, Sept. 2005.

490. Y. Wang, C. Yu, L.-S. Yan, A.E. Willner, R. Roussev, C. Langrock, and M.M. Fejer, "Continuously-Tunable Dispersionless 30-ns Optical Delay Element using a Two-Pump PPLN, DCF, and a Tunable Dispersion Compensator," **European Conference on Optical Communications (ECOC),** paper Th1.3.3, Glasgow, Scotland, Sept. 2005.

491. P. Ebrahimi, R. Chen, A.E. Willner, and D.A.B. Miller, "Filtering and High-Speed Switching Characteristics of a C-band Rapidly Tunable Wavelength-Selective MSM Detector," **European Conference on Optical Communications (ECOC),** paper We3.6.5, Glasgow, Scotland, Sept. 2005.

492. L.-S. Yan, X. Steve Yao, C. Yu, G. Xie, Y. Wang, L. Lin, Z. Chen, and A.E. Willner, "<1-μs Highly-Repeatable Polarization-State Generator and Analyzer for 40-Gb/s System Performance Monitoring," **European Conference on Optical Communications (ECOC),** paper Th3.2.3, Glasgow, Scotland, Sept. 2005.

493. T. Luo, C. Yu, L.-S. Yan, S. Kumar, Z. Pan, A.E. Willner, and S. Yao, "Simple Autocorrelation Technique by Tuning a DGD Element and Measuring a Pulse's Degree-of-Polarization," **European Conference on Optical Communications (ECOC),** paper We2.3.3, Glasgow, Scotland, Sept. 2005.

494. L.-S. Yan, X. Steve Yao, and A.E. Willner, "Enabling "Hinge" Model by Slow Dynamics in a Variable DGD-based PMD Emulator," **European Conference on Optical Communications (ECOC)**, paper We4.P.130, Glasgow, Scotland, Sept. 2005.

495. Changyuan Yu, Ting Luo, Lin Zhang and Alan E. Willner, "Distortion Effects on Data Pulses in a Slow Light Tunable Delay Line Due to Stimulated Brillouin Scattering in a Highly Nonlinear Fiber," **European Conference on Optical Communications (ECOC),** paper Mo4.5.2, Glasgow, Scotland, Sept. 2005.

496. P. Saghari, R. Gholizadeh, P. Kamath, R. Omrani, A.E. Willner, J.A. Bannister*, J.D. Touch, P.V. Kumar, "Analytical Model of Variable Quality of Service to Increase Number of Users in an O-CDMA Network," **European Conference on Optical Communications(ECOC),** paper Th1.4.7, Glasgow, Scotland, Sept. 2005.

497. J.E. McGeehan, M. Giltrelli, and A.E. Willner, "All-Optical Digital 3-Input AND Gate using Sum- and Difference-Frequency Generation in a PPLN Waveguide" **IEEE Lasers and Electro-Optics Society Summer Topical Meeting on Optical Signal Processing**, Proceedings, paper TuC1.2, San Diego, CA, July 25-27 (IEEE, Piscataway, NJ, 2005).

498. P. Saghari, R. Gholizadeh, H. Abrishami, E. Pakbaznia, J.E. McGeehan, S.M.R. M Nezam, and A.E. Willner, "Experimental Evaluation of the Optimum Decision Threshold for Varying Numbers of Active Users in a 2D t-λ Asynchronous O-CDMA System,"**Conference on Lasers and Electro-Optics (CLEO)**, paper CTuFF4, Baltimore, MD, May 2005 (Optical Society of America, Wash., D.C., 2005)

499. J.E. McGeehan, S. Kumar, and A.E. Willner, "All-Optical Digital Half-Subtracter/Adder using Semiconductor Optical Amplifiers and a PPLN Waveguide,"**Conference on Lasers and Electro-Optics (CLEO)**, paper CTuX6, Baltimore, MD, May 2005 (Optical Society of America, Wash., D.C., 2005).

500. P. Saghari, R. Gholizadeh, H. Abrishami, E. Pakbaznia, and A.E. Willner, "Doubling the Number of Active Users in a 2-D Time-Wavelength O-CDMA Network using a Hard Limiting Receiver,"**Conference on Lasers and Electro-Optics (CLEO)**, paper JThE64, Baltimore, MD, May 2005 (Optical Society of America, Wash., D.C., 2005).

REFEREED CONFERENCE PROCEEDINGS: (CONTINUED)

501. L. Zhang, T. Luo, L.-S. Yan, Y. Wang, C. Yu, and A.E. Willner, "Periodic Dispersion Compensation Induced by Photo-Sensitivity for Achieving Quasi-Phase Matching in Holey Fibers,"**Conference on Lasers and Electro-Optics (CLEO)**, paper JWB49, Baltimore, MD, May 2005 (Optical Society of America, Wash., D.C., 2005).

502. R.W. Boyd, D.J. Gauthier, A.L. Gaeta, and A.E. Willner, "Limits on the Time Delay Induced by Slow-Light Propagation," **Quantum Electronics and Laser Science Conference (QELS),** paper QTuC1, Baltimore, MD, May 2005 (Optical Society of America, Wash., D.C., 2005).

503. C. Yu, T. Luo, B. Zhang, Z. Pan, M. Adler, Y. Wang, J. McGeehan, and A.E. Willner, "3R Regeneration of a 40-Gbit/s Optical Signal by Optical Parametric Amplification in a Highly-Nonlinear Fiber," **IEEE/OSA Conference on Optical Fiber Communications** (OFC) '05, paper OTuO1, Anaheim, CA, March 2005 (Optical Society of America, Washington, D.C., 2005).

504. T. Luo, Z. Pan, C. Yu, L.-S. Yan, S. Kumar, B. Zhang, M. Adler, A.E. Willner, and S. Yao, "Optical-Fiber-Based Autocorrelation Technique using a Tunable DGD Element and Highly-Nonlinear Fiber," **IEEE/OSA Conference on Optical Fiber Communications** (OFC) '05, paper OFH6, Anaheim, CA, March 2005 (Optical Society of America, Washington, D.C., 2005).

505. C. Yu, Z. Pan, T. Luo, S. Kumar, L.-S. Yan, B. Zhang, L. Zhang, Y. Wang, M. Adler, and A.E. Willner, "160-GHz Pulse Generator using a 40-GHz Phase Modulator and PM Fiber," **IEEE/OSA Conference on Optical Fiber Communications** (OFC) '05, paper OThR5, Anaheim, CA, March 2005 (Optical Society of America, Washington, D.C., 2005).

506. L.-S. Yan, T. Lu, B. Zhang, C. Yu, D.O. Yevick, and A.E. Willner, "Fiber Transmission System Application and Limitation of Multicanonical Sampling in PMD Emulation," **IEEE/OSA Conference on Optical Fiber Communications** (OFC) '05, paper OThT4, Anaheim, CA, March 2005 (Optical Society of America, Washington, D.C., 2005).

507. L.-S. Yan, Y. Wang, B. Zhang, C. Yu, J. McGeehan, L. Paraschis, and A.E. Willner, "1,400 km Transmission using a Directly Modulated DFB Laser and Optical Sideband Filtering in an 8x10 Gb/s WDM System," **European Conference on Optical Communications (ECOC),** paper Mo4.5.7, Stockholm, Sweden, Sept. 2004.

508. C. Yu, Z. Pan, T. Luo, Y. Wang, L.C. Christen, and A.E. Willner, "40-GHz RZ and CS-RZ Pulse Generation using a Phase Modulator and PM Fiber,"**European Conference on Optical Communications (ECOC),** paper We4.p.125, Stockholm, Sweden, Sept. 2004.

509. S. Kumar and A.E. Willner, "All Optical XNOR Gate using Simultaneous Four-Wave Mixing and Cross-Gain Modulation in an SOA," **IEEE Lasers and Electro-Optics Society Annual Meeting 2004**, paper ThU2, Puerto Rico, Nov. (IEEE, Piscataway, NJ, 2004).

510. M. Bagheri, J. R. Cao, W. K. Marshall, Z.-J. Wei, S.-J. Choi, J. D. O'Brien, P. D. Dapkus, and A.E. Willner, Linewidth Measurement of Sapphire-Bonded 2-D Photonic Crystal Lasers," **IEEE Lasers and Electro-Optics Society Annual Meeting 2004**, paper MC4, Puerto Rico, Nov. (IEEE, Piscataway, NJ, 2004).

511. K. Merchant, J. McGeehan, A. Willner, S. Ovadia, P. Kamath, J. Touch, and J. Bannister, "Performance Evaluation of a Router with Tunnable Recirculating Buffers in an Optical Burst Switching Environment," **Broadband Networks 2004**. BroadNets 2004. Proceedings. First International Conference on, San Jose, CA, pp. 102-109, Oct. 2004 (IEEE, Piscataway, NJ, 2004).

512. Kashyap Merchant, John McGeehan, Alan E. Willner, Shlomo Ovadia, Joseph Bannister, and Joe Touch, "Performance Evaluation of Core Router in an Optical Burst Switching Environment," **Broadband Networks**

REFEREED CONFERENCE PROCEEDINGS: (CONTINUED)

2004 Conference (IEEE Co-Sponsored), Broadband Optical Networking Symposium, San Jose, CA, Oct. 2004 (IEEE, Piscataway, NJ, 2004).

513. Y. Wang, C. Yu, T. Luo, Z. Pan, L.-S. Yan, A.E. Willner, "Tunable All-Optical Wavelength Conversion and Wavelength Multicasting using Orthogonally-Polarized Fiber FWM," **Conference on Lasers and Electro-Optics** (**CLEO**), paper CFA6, San Francisco, CA, May 2004 (Optical Society of America, Wash., D.C., 2004).

514. L.-S. Yan, Y. Wang, B. Zhang, C. Yu, J. McGeehan, L. Paraschis, and A.E. Willner, "Reach Extension in 10-Gb/s Directly Modulated Systems using Narrow-Band Partial Optical Filtering," **Conference on Lasers and Electro-Optics** (**CLEO**), paper CWA18, San Francisco, CA, May 2004 (Optical Society of America, Wash., D.C., 2004).

515. C. Yu, L. Christen, T. Luo, Y. Wang, Z. Pan, L.-S. Yan, and A.E. Willner, "All-Optical XOR Gate Based on Kerr Effect in Single Highly-Nonlinear Fiber," **Conference on Lasers and Electro-Optics** (**CLEO**), paper CFA4, San Francisco, CA, May 2004 (Optical Society of America, Wash., D.C., 2004).

516. S.M.R. Motaghian Nezam, J.E. McGeehan, R. Gholizadeh, and AE. Willner, "Measuring the Nonlinear Coefficient of a Fiber Span using Optical and RF Clock Tone Monitoring," **Conference on Lasers and Electro-Optics** (**CLEO**), paper CThLL5, San Francisco, CA, May 2004 (Optical Society of America, Wash., D.C., 2004).

517. Y.-W. Song, S.M.R. Motaghian Nezam, Z. Pan, and A.E. Willner, "Accurate DOP Monitoring of Several WDM Channels for Simultaneous PMD Compensation," **Conference on Lasers and Electro-Optics** (**CLEO**), paper CThLL1, San Francisco, CA, May 2004 (Optical Society of America, Wash., D.C., 2004).

518. S.M.R. Motaghian Nezam, P. Saghari, and A.E. Willner, "XPM-Induced Control Signal Degradation for DOP and RF-Power-Based PMD Monitors in WDM Systems,"**Conference on Lasers and Electro-Optics** (**CLEO**), paper CThLL2, San Francisco, CA, May 2004 (Optical Society of America, Wash., D.C., 2004).

519. C. Yu, L.-S. Yan, T. Luo, Y. Wang, Z. Pan, and A.E. Willner, "Width-Tunable Optical Pulse Generation Based on Four-Wave Mixing in Highly-Nonlinear Fiber," **Conference on Lasers and Electro-Optics** (**CLEO**), paper CTuN4, San Francisco, CA, May 2004 (Optical Society of America, Wash., D.C., 2004).

520. T. Lu, D.O. Yevick, L.-S. Yan, and A.E. Willner, "Experimental Realization of Multicanonical Sampling," **Conference on Lasers and Electro-Optics** (**CLEO**), paper CTuEE4, San Francisco, CA, May 2004 (Optical Society of America, Wash., D.C., 2004).

521. S. Kumar, D. Gurkan, A.E. Willner, K. Parameswaran, and M.M. Fejer, "All-Optical Half Adder using a PPLN Waveguide and an SOA," **Conference on Optical Fiber Communications (OFC),** paper WN2, Los Angeles, CA, Feb. 2004 (Optical Society of America, Washington, D.C., 2004).

522. S.M.R. Motaghian Nezam, J.E. McGeehan, and A.E. Willner, "Chromatic Dispersion Monitoring using Partial Optical Filtering and Phase-Shift Detection of Bit Rate and Doubled Half Bit Rate Frequency Components," **Conference on Optical Fiber Communications (OFC),** paper ThU2, Los Angeles, CA, Feb. 2004 (Optical Society of America, Washington, D.C., 2004).

523. P. Saghari, S.M.R. Motaghian Nezam, A.B. Sahin, and A.E. Willner, "Polarization-State-Rotation and Filtering Receiver for Bandwidth-Efficient Tandem Single Sideband Systems," **Conference on Optical Fiber Communications** (OFC) '04, paper FN5, Los Angeles, CA, Feb. 2004 (Optical Society of America, Washington, D.C., 2004).

524. P. Ebrahimi, M. Kargar, M.C. Hauer, A.E. Willner, K. Yu, O. Solgaard, "A 10-ms-Tuning MEMS-Actuated Gires-Tournois Filter for use as a Tunable Wavelength Demultiplexer and a Tunable OCDMA

REFEREED CONFERENCE PROCEEDINGS: (CONTINUED)

Encoder/Decoder," **Conference on Optical Fiber Communications (OFC),** paper ThQ2, Los Angeles, CA, Feb. 2004 (Optical Society of America, Washington, D.C., 2004).

525. L.-S. Yan, Y. Chang, S. Killmeyer, B. Gomatam, R. Talaga, T. Luo, and A.E. Willner, "Reach Extension in 10-Gb/s Long-Haul Fiber Links with Adaptive Eye Mapping in a Si-CMOS 16-bit Transceiver IC," **Conference on Optical Fiber Communications (OFC),** Los Angeles, CA, paper FN1, Feb. 2004 (Optical Society of America, Washington, D.C., 2004).

526. T. Luo, C. Yu, L.-S. Yan, Z. Pan, Y. Wang, A.E. Willner, "Polarization-Insensitive Single-Pump Optical Parametric Amplifier by Depolarization of the Pump," **Conference on Optical Fiber Communications** (OFC) '04, paper TuC1, Los Angeles, CA, Feb. 2004 (Optical Society of America, Washington, D.C., 2004).

527. J.E. McGeehan, P. Saghari, S.M.R. Motaghian Nezam, T.H. Izadpanah, A.E. Willner, R. Omrani, and P.V. Kumar, "3D Time-Wavelength-Polarization OCDMA Coding for Incresaing the Number of Users in OCDMA LANs," **Conference on Optical Fiber Communications (OFC),** paper FE5, Los Angeles, CA, Feb. 2004 (Optical Society of America, Washington, D.C., 2004).

528. P. Saghari, R. Omrani, A.E. Willner, and P.V. Kumar, "Analytical Interference Model for 2-Dimentional (Time-Wavelength) Asynchronous O-CDMA Systems," **Conference on Optical Fiber Communications (OFC),** paper FG7, Los Angeles, CA, Feb. 2004 (Optical Society of America, Washington, D.C., 2004).

529. C. Yu, Y. Wang, T. Luo, Z. Pan, S.M.R. Motaghian Nezam, A.B. Sahin, and A.E. Willner, "Chromatic-Dispersion-Insensitive PMD Monitoring for NRZ Data Based on Clock Power Measurement using a Narrowband FBG Notch Filter," **European Conference on Optical Communications (ECOC),** Paper Tu4.2.3, Rimini, Italy, Sept. 2003.

530. L.-S. Yan, Y.Q. Shi, X.S. Yao, and A.E. Willner, "Simultaneous Monitoring of Both OSNR and PMD using Polarization Techniques," **European Conference on Optical Communications (ECOC),** Paper We4.P.133, Rimini, Italy, Sept. 2003.

531. Y. Wang, Z. Pan, C. Yu, T. Luo, A.B. Sahin, and A.E. Willner, "A Multi-Wavelength Optical Source Based on Supercontinuum Generation using Phase and Intensity Modulation at the Line-Spacing Rate," **European Conference on Optical Communications (ECOC),** Paper Th3.2.4, Rimini, Italy, Sept. 2003.

532. P. Ebrahimi, D. Gurkan, A.B. Sahin, D.S. Starodubov, and A.E Willner, "Experimental Demonstration of Multiple-Wavelength Hard-Limiting Receiver for Reducing MAI Noise in a 2-D Time-Wavelength OCDMA System," **European Conference on Optical Communications (ECOC),** Paper Th1.5.3, Rimini, Italy, Sept. 2003.

533. S.M.R. Motaghian Nezam, J.E. McGeehan, and A.E. Willner, "Cancellation of Second-Order PMD Effects on First Order DOP-Based DGD Monitors and Measurement of Depolarization Rate," **IEEE Lasers and Electro-Optics Society Annual Meeting 2003**, Paper TuA3, Tucson, AZ, Nov. (IEEE, Piscataway, NJ, 2003).

534. T. Luo, C. Yu, Z. Pan, Y. Wang, Y. Arieli, and A.E. Willner, "Chromatic-Dispersion-Insensitive DGD Monitoring by Adding a Frequency-Shifted Carrier Along the Orthogonal Polarization State," **IEEE Lasers and Electro-Optics Society Annual Meeting 2003**, Paper TuA4, Tucson, AZ, Nov. (IEEE, Piscataway, NJ, 2003).

535. S.M.R. Motaghian Nezam, J.E. McGeehan, and A.E. Willner, "Measuring of Link DGD Without Polarization Scrambling using Degree-of-Polarization and Symmetric/Asymmetric Partial Optical Filtering," **IEEE Lasers and Electro-Optics Society Annual Meeting 2003**, Paper ThQ4, Tucson, AZ, Nov. (IEEE, Piscataway, NJ, 2003).

REFEREED CONFERENCE PROCEEDINGS: (CONTINUED)

536. A. Sahin and A.E. Willner, "System Limitations due to Chromatic Dispersion and Receiver Bandwidth for 2-D Time-Wavelength OCDMA Systems," **IEEE Lasers and Electro-Optics Society Annual Meeting 2003**, paper WI5, Tucson, AZ, Nov. (IEEE, Piscataway, NJ, 2003).

537. L.-S. Yan, Y. Shi, X.S. Yao, and A.E. Willner, "All-Order PMD Emulator with Tunable Statistics," **IEEE Lasers and Electro-Optics Society Summer Topical Meeting on Polarization Mode Dispersion**, Proceedings, paper TuB3.2, Vancouver, Canada, July 14-16 (IEEE, Piscataway, NJ, 2003).

538. S.M.R. Motaghian Nezam, J.E. McGeehan, and A.E. Willner, "Measuring Component DGD using Polarized Fixed Frequency Components and Monitoring the DOP," **IEEE Lasers and Electro-Optics Society Summer Topical Meeting on Polarization Mode Dispersion**, Proceedings, paper WB2.3, Vancouver, Canada, July 14-16 (IEEE, Piscataway, NJ, 2003).

539. L.-S. Yan, M.C. Hauer, P. Ebrahimi, Y. Wang, A.E. Willner, Y.Q. Shi, X.S. Yao, and W.L. Kath, "Measurement of Q Degradation due to PMD using Importance Sampling," **Conference on Lasers and Electro-Optics (CLEO)**, Paper CThJ6, Baltimore, MD, June 2003 (Optical Society of America, Wash., D.C., 2003).

540. S.M.R. Motaghian Nezam, T. Luo, and A.E. Willner, "Chromatic Dispersion Monitoring for CSRZ Data using a Chromatic-Dispersion-Biased Clock,"**Conference on Lasers and Electro-Optics (CLEO)**, Paper CThJ5, Baltimore, MD, June 2003 (Optical Society of America, Wash., D.C., 2003).

541. Y.W. Song, Z. Pan, Y. Arieli, S.M.R. Motaghian, S.A. Havstad, and A.E. Willner, "Enhanced Suppression of Nonlinearity-Induced Crosstalk in WDM Systems using Optical Polarization-Shift-Keying,"**Conference on Lasers and Electro-Optics (CLEO)**, Paper CThQ2, Baltimore, MD, June 2003 (Optical Society of America, Wash., D.C., 2003).

542. T. Luo, L.-S. Yan, Y.Q. Shi, Z. Pan, Y.W. Song, A.E. Willner, and S. Yao, "Dynamically Tunable Wavelength Spacing Multi-Wavelength Ring Laser using a Programmable DGD Module as the Intra-Cavity Filter,"**Conference on Lasers and Electro-Optics (CLEO)**, Paper CMY1, Baltimore, MD, June 2003 (Optical Society of America, Wash., D.C., 2003).

543. I.T. Lima, Jr., L.-S. Yan, B.S. Marks, C.R. Menyuk, and A.E. Willner, "Experimental Verification of the Penalty Produced by Polarization Effects in Fiber Recirculating Loops," **Conference on Lasers and Electro-Optics (CLEO)**, Paper CThD2, Baltimore, MD, June 2003 (Optical Society of America, Wash., D.C., 2003).

544. J.E. McGeehan, S. Kumar, D. Gurkan, J. Bannister, J. Touch, and A. E. Willner, "Optical Time-to-Live Decrementing and Subsequent Dropping of an Optical Packet," **Conference on Optical Fiber Communications (OFC),** Paper FS6, Atlanta, GA, March 2003 (Optical Society of America, Washington, D.C., 2003).

545. L.-S. Yan, M.C. Hauer, Y.Q. Shi, X. Steve Yao, A.E. Willner, and W.L. Kath, "Experimental Importance Sampling using a 3-Section PMD Emulator with Programmable DGD Elements," **Conference on Optical Fiber Communications (OFC),** Paper TuA4, Atlanta, GA, March 2003 (Optical Society of America, Washington, D.C., 2003).

546. Z. Pan, Y. Wang, Y.W. Song, S.M.R. Motaghian, S. Havstad, and A. E. Willner, "Monitoring Chromatic Dispersion and PMD Impairments in Optical Differential Phase-Shift-Keyed (DPSK) Systems," **Conference on Optical Fiber Communications (OFC),** Paper WP1, Atlanta, GA, March 2003 (Optical Society of America, Washington, D.C., 2003).

547. T. Luo, Z. Pan, S.M.R. Motaghian Nezam, L.S. Yan, A. Sahin and A.E. Willner, "Chromatic-Dispersion-Insensitive PMD Monitoring using Optical Off-Center Bandpass Filtering," **Conference on Optical Fiber**

REFEREED CONFERENCE PROCEEDINGS: (CONTINUED)

Communications (OFC), Paper ThY3, Atlanta, GA, March 2003 (Optical Society of America, Washington, D.C., 2003).

548. S.M.R. Motaghian Nezam, J.E. McGeehan, and A.E. Willner, "Dependence of DOP-Based DGD Monitors on the Optical Power Spectrum of Equal-Pulse-Width Data Formats," **Conference on Optical Fiber Communications (OFC),** Paper MF91, Atlanta, GA, March 2003 (Optical Society of America, Washington, D.C., 2003).

549. S.M.R. Motaghian Nezam, A.B. Sahin, J. E. McGeehan, Z. Pan, T. Luo, Y.W. Song, and A.E. Willner, "Polarization State Rotation Filtering for Single Sideband Generation and Carrier Suppression using a Variable DGD Element," **Conference on Optical Fiber Communications (OFC),** Paper FM7, Atlanta, GA, March 2003 (Optical Society of America, Washington, D.C., 2003).

550. D. Gurkan, S. Kumar, A.B. Sahin, A. Willner, K. Parameswaran, M. Fejer, D. Starodubov, J. Bannister, P. Kamath, J. Touch, "All-Optical Wavelength and Time 2-D Code Converter for Dynamically-Reconfigurable O-CDMA Networks using a PPLN Waveguide," **Conference on Optical Fiber Communications (OFC),** Paper FD6, Atlanta, GA, March 2003 (Optical Society of America, Washington, D.C., 2003).

551. S.M.R. Motaghian Nezam, J.E. McGeehan, and A.E. Willner, "DOP-Based PMD Monitoring in Optical Subcarrier Multiplexed Systems by Carrier/Sideband Equalization," **Conference on Optical Fiber Communications (OFC),** Paper ThY4, Atlanta, GA, March 2003 (Optical Society of America, Washington, D.C., 2003).

552. S.M.R. Motaghian Nezam, J.E. McGeehan, and A.E. Willner, "Measuring Component DGD by using Polarized ASE Noise and Monitoring the Degree of Polarization," **Conference on Optical Fiber Communications (OFC),** Paper TuK2, Atlanta, GA, March 2003 (Optical Society of America, Washington, D.C., 2003).

553. A.B. Sahin, P. Saghari, L-S. Yan, D. Gurkan, and A.E. Willner, "Bias-Induced Diversity-Detection (BIDD) Technique for Robust Transmission of Subcarrier-Multiplexed Channels," **Conference on Optical Fiber Communications (OFC),** Paper FD3, Atlanta, GA, March 2003 (Optical Society of America, Washington, D.C., 2003).

554. L.-S. Yan, M.C. Hauer, C. Yeh, G. Yang, L. Lin, Z. Chen, Y. Q. Shi, X. Steve Yao, A.E. Willner, and W.L. Kath, "High-Speed, Stable and Repeatable PMD Emulator with Tunable Statistics," **Conference on Optical Fiber Communications (OFC),** Paper MF6, Atlanta, GA, March 2003 (Optical Society of America, Washington, D.C., 2003).

555. C. Yu, Z. Pan, Y. Wang, Y.W. Song, D. Gurkan, M.C. Hauer, D. Starodubov, and A.E. Willner, "Polarization-Insensitive Four-Wave Mixing Wavelength Conversion using a Fiber Bragg Grating and a Faraday Rotator Mirror," **Conference on Optical Fiber Communications (OFC),** Paper WG2, Atlanta, GA, March 2003 (Optical Society of America, Washington, D.C., 2003).

556. L.-S. Yan, Y. Shi, and A.E. Willner, "Chirp Measurement of Electro-Optic Modulators using Simple Optical Spectrum Analysis," **Conference on Optical Fiber Communications (OFC),** Paper MF58, Atlanta, GA, March 2003 (Optical Society of America, Washington, D.C., 2003).

557. Y. Wang, Z. Pan, A.B. Sahin, L.-S. Yan, C. Yu, and A. E. Willner, "In-line Chromatic Dispersion Monitoring using Optically-Added Phase-Modulated In-band Tones for a 10 Gb/s System," **Conference on Optical Fiber Communications** (OFC) '03, Paper WP3, Atlanta, GA, March 2003 (Optical Society of America, Washington, D.C., 2003).

REFEREED CONFERENCE PROCEEDINGS: (CONTINUED)

558. D. Gurkan, S. Kumar, A.E. Willner, K.R. Parameswaran, and M.M. Fejer, "Simultaneous and Independent Label Swapping of Multiple WDM Channels in anAll-Optical Packet-Switched Network using PPLN Waveguides as Wavelength Converters," **European Conference on Optical Communications (ECOC),** paper 5.5.7, Copenhagen, Sept. 2002.

559. Y.W. Song, Z. Pan, C. Yu, Y. Wang, J.E. Rothenberg, J. Popelek, H. Li, Y. Li, and A.E. Willner, "Error-Free Tunable Dispersion Slope Compensation for 40-Gb/s WDM Systems using Non-Channelized 3rd-Order Chirped Fiber Bragg Gratings," **European Conference on Optical Communications (ECOC),** paper 6.1.2, Copenhagen, Sept. 2002.

560. L.-S. Yan, S.M.R. Motaghian Nezam, A.B. Sahin, J.E. McGeehan, T. Luo. Q. Yu, and A.E. Willner, "Enhanced Robustness of RZ WDM Systems using Tunable Pulse-Width Management at the Transmitter," **European Conference on Optical Communications (ECOC),** paper 10.6.2, Copenhagen, Sept. 2002.

561. L.-S. Yan, Q. Yu, and A.E. Willner, "Simple Measurement of the Chirp Parameter of Optical Modulators using Partial Optical Filtering,"**European Conference on Optical Communications (ECOC),** paper P2.28, Copenhagen, Sept. 2002.

562. Z. Pan, Y. -W. Song, C. Yu, Y. Wang, J. Popelek, H. Li, Y. Li, and A. E. Willner, "Tunable Chromatic Dispersion Compensation in a 4x40-Gbit/s System using Sampled Nonlinearly-Chirped Fiber Bragg Gratings (NC-FBGs)," **European Conference on Optical Communications (ECOC),** paper 10.3.2, Copenhagen, Sept. 2002.

563. L.-S. Yan, Q. Yu, and A.E. Willner, "Periodic Polarization Scrambling with Uniformly Distributed SOPs on the Poincarè Sphere," **European Conference on Optical Communications (ECOC),** paper P3.06, Copenhagen, Sept. 2002.

564. L.-S. Yan, Q. Yu, T. Luo, and A.E. Willner, "Deleterious Systems Effects due to Polarization Scrambling in the Presence of Polarization Dependent Loss," **IEEE Lasers and Electro-Optics Society Summer Topical Meeting on Dynamic Enablers of Next-Generation Optical Communications Systems**, Proceedings, paper TuB2, Quebec City, Canada, July 15-17 (IEEE, Piscataway, NJ, 2002).

565. S.M.R. Motaghian Nezam, L.-S. Yan, J. McGeehan, Y.Q. Shi, A.E. Willner, S. Yao, "Wide-Dynamic-Range DGD Monitoring by Partial Optical Signal Spectrum DOP Measurement," **Conference on Optical Fiber Communications** (OFC) '02, Post-Deadline Paper PD-28, Anaheim, CA, March 2002 (Optical Society of America, Washington, D.C., 2002).

566. C.H. Lin, E.R. Lyons, A. Au, R. Zaouk, A. Shkel, H.P. Lee, M.C. Hauer, Q. Yu, A.E. Willlner, "Design and Fabrication of Thin-Film Microheater Tuned Fiber Array Device," **Conference on Lasers and Electro-Optics (CLEO)**, paper CThO27, Long Beach, CA, May 2002 (Optical Society of America, Wash., D.C., 2002).

567. Z. Pan, Q. Yu, Y. Arieli, and A.E. Willner, "Fast XPM-Induced Polarization-State Fluctuations in WDM Systems and Their Mitigation," **Conference on Optical Fiber Communications** (OFC) '02, paper ThA7, Anaheim, CA, March 2002 (Optical Society of America, Washington, D.C., 2002).

568. M.C. Hauer, Q. Yu, E.R. Lyons, C.H. Lin, A.A. Au, H.P. Lee, and A.E. Willner, "Compact, All-Fiber PMD Emulator using an Integrated Series of Thin-Film Micro-Heaters," **Conference on Optical Fiber Communications** (OFC) '02, paper ThA3, Anaheim, CA, March 2002 (Optical Society of America, Washington, D.C., 2002).

569. M.C. Hauer, J. McGeehan, J. Touch, P. Kamath, J. Bannister, E.R. Lyons, C.H. Lin, A.A. Au, H.P. Lee, D.S. Starodubov, and A.E. Willner, "Dynamically Reconfigurable All-Optical Correlators to Support Ultrafast

REFEREED CONFERENCE PROCEEDINGS: (CONTINUED)

Internet Routing," **Conference on Optical Fiber Communications** (OFC) '02, paper WM7, Anaheim, CA, March 2002 (Optical Society of America, Washington, D.C., 2002).

570. J. McGeehan, M.C. Hauer, A.B. Sahin, and A.E. Willner, "Reconfigurable Multi-Wavelength Optical Correlator for Header-Based Switching and Routing," **Conference on Optical Fiber Communications** (OFC) '02, paper WM4, Anaheim, CA, March 2002 (Optical Society of America, Washington, D.C., 2002).

571. A.B. Sahin and A.E. Willner, "Dispersion Division Multiplexing for In-Band Subcarrier-Header-Based All-Optical Packet Switching,"**Conference on Optical Fiber Communications** (OFC) '02, paper WO1, Anaheim, CA, March 2002 (Optical Society of America, Washington, D.C., 2002).

572. S. M. R. Motaghian Nezam, Y.W. Song , A.B. Sahin, Z. Pan, and A.E. Willner, "PMD Monitoring in WDM Systems for NRZ Data using a Chromatic-Dispersion-Regenerated Clock," **Conference on Optical Fiber Communications** (OFC) '02, paper WE5, Anaheim, CA, March 2002 (Optical Society of America, Washington, D.C., 2002).

573. Y.W. Song, S.M.R. Motaghian, D. Starodubov, J.E. Rothenberg, Z. Pan, H. Li, R. Wilcox, J. Popelek, R. Caldwell, V. Grubsky, and A.E. Willner, "Tunable Dispersion Slope Compensation for WDM Systems using a Single Non-Channelized Third-Order-Chirped FBG," **Conference on Optical Fiber Communications** (OFC) '02, paper ThAA4, Anaheim, CA, March 2002 (Optical Society of America, Washington, D.C., 2002).

574. L.-S. Yan, Q. Yu, T. Luo, A.E. Willner, and S. Yao, "Higher-Order PMD Compensation using a Polarization Controller and Phase Modulator in the Transmitter," **Conference on Optical Fiber Communications** (OFC) '02, paper WQ1, Anaheim, CA, March 2002 (Optical Society of America, Washington, D.C., 2002).

575. Z. Pan, Q. Yu, Y.W. Song, and A.E. Willner, "40-Gbit/s RZ 120-km Transmission using a Nonlinearly-Chirped Fiber Bragg Grating (NL-FBG) for Tunable Dispersion Compensation," **Conference on Optical Fiber Communications** (OFC) '02, paper WV7, Anaheim, CA, March 2002 (Optical Society of America, Washington, D.C., 2002).

576. C.Y. Yu, Q. Yu, Z. Pan, A.B. Sahin, and A.E. Willner, "Optical Compensation of PMD-Induced Power Fading for Single-Sideband Subcarrier-Multiplexed Systems," **Conference on Optical Fiber Communications** (OFC) '02, paper WQ5, Anaheim, CA, March 2002 (Optical Society of America, Washington, D.C., 2002).

577. L.-S. Yan, T. Luo, Q. Yu, Y. Xie, K.-M. Feng, R. Khosravani, A.E. Willner, and J. Rothenberg, "System Impact of Group-Delay Ripple in Single and Cascaded Chirped FBGs," **Conference on Optical Fiber Communications** (OFC) '02, paper ThGG63, Anaheim, CA, March 2002 (Optical Society of America, Washington, D.C., 2002).

578. L.-S. Yan, Q. Yu, and A. E. Willner, "Demonstration of In-Line Monitoring and Dynamic Broadband Compensation of Polarization Dependent Loss," **European Conference on Optical Communications (ECOC),** paper We.P.38, Amsterdam, Oct. 2001.

579. A.B. Sahin, L. -S. Yan, Q. Yu, M. Hauer, Z. Pan, and A.E. Willner, "Dynamic Dispersion Slope Monitoring of Many WDM Channels using Dispersion-Induced RF Clock Regeneration," **European Conference on Optical Communications (ECOC),** paper We.P.35, Amsterdam, Oct. 2001.

580. L.-S. Yan, Q. Yu, A.B. Sahin, Y. Wang, and A.E. Willner, "Simple Bit-Rate-Independent PMD Monitoring for WDM Systems," **European Conference on Optical Communications (ECOC),** paper Tu.A.3.2, Amsterdam, Oct. 2001.

REFEREED CONFERENCE PROCEEDINGS: (CONTINUED)

581. Z. Pan, Y. Wang, C. Yu, T. Luo, A.B. Sahin, Q. Yu, and A.E. Willner, "Intra-Bit Polarization Diversity Modulation for PMD Mitigation," **European Conference on Optical Communications (ECOC),** paper We.P.37, Amsterdam, Oct. 2001.

582. A.E. Willner and J.E. Rothenberg, "Nonlinearly-Chirped FBG for Tunable Chromatic Dispersion Compensation of Multiple WDM Channels," **National Fiber Optics Engineers Conference (NFOEC)**, Technical Digest, paper 347, Baltimore, MD, July 2001.

583. P. Ebrahimi, M. C. Hauer, Q. Yu, R. Khosravani, D. Gurkan, D.W. Kim, D. W. Lee, and A. E. Willner, "Statistics of Polarization Dependant Gain in Raman Fiber Amplifiers due to PMD,"**Conference on Lasers and Electro-Optics (CLEO)**, paper CTuJ1, Baltimore, MD, May 2001 (Optical Society of America, Wash., D.C., 2001).

584. Q. Yu, L.-S. Yan, and A.E. Willner, "10-Gb/s PMD Compensation Following a Recirculating Fiber Loop," **Conference on Lasers and Electro-Optics (CLEO)**, paper CFE5, Baltimore, MD, May 2001 (Optical Society of America, Wash., D.C., 2001).

585. S.M.R. Motaghian Nezam, Y. Wang, M. Hauer, S. Lee, and A. E. Willner, "Simultaneous PMD Monitoring of Several WDM Channels using Subcarrier Tones," **Conference on Lasers and Electro-Optics (CLEO)**, paper CFE1, Baltimore, MD, May 2001 (Optical Society of America, Wash., D.C., 2001).

586. Y.W. Song, D. Starodubov, Z. Pan, Y. Xie, A. E. Willner, and J. Feinberg, "A Tunable Dispersion Compensator with Fixed Bandwidth for WDM Systems using a Uniform FBG," **Conference on Lasers and Electro-Optics (CLEO)**, paper CThO1, Baltimore, MD, May 2001 (Optical Society of America, Wash., D.C., 2001).

587. D. Gurkan, M. I. Hayee, and A.E. Willner,"Transient Behavior of L-band and C-band EDFAs in an Add/Drop Multiplexed 40-Channel WDM Network," **Conference on Lasers and Electro-Optics (CLEO)**, paper CThH5, Baltimore, MD, May 2001 (Optical Society of America, Wash., D.C., 2001).

588. M.C. Cardakli, A.B. Sahin, O.A. Adamczyk, A.E. Willner, K.R. Parameswaran, and M.M. Fejer,"All-Optical Wavelength Shifting of Subcarrier Channels using Difference-Frequency-Generation in a PPLN," **Conference on Lasers and Electro-Optics (CLEO)**, paper CThB2, Baltimore, MD, May 2001 (Optical Society of America, Wash., D.C., 2001).

589. Z. Pan, Q. Yu, Y. Xie, Y.W. Song, and A. E. Willner, "Clock Regenerating Effect for NRZ Data due to Higher-Order Polarization-Mode-Dispersion," **Conference on Lasers and Electro-Optics (CLEO)**, paper CFE2, Baltimore, MD, May 2001 (Optical Society of America, Wash., D.C., 2001).

590. R. Khosravani, Y. Xie, L.-S. Yan, Y.W. Song, A.E. Willner, and C.R. Menyuk "Limitations to First-Order PMD Compensation in WDM Systems Due to XPM-Induced PSP Changes," **Conference on Optical Fiber Communications** '01, paper WAA5, Anaheim, CA, March 2001 (Optical Society of America, Washington, D.C., 2001).

591. Q. Yu, S. Lee, L. Yan, Y. Xie, O.H. Adamczyk, and A.E. Willner "A Short Recirculating Fiber Loop Testbed with Accurate Reproduction of Maxwellian PMD Statistics," **Conference on Optical Fiber Communications** '01, paper WT2, Anaheim, CA, March 2001 (Optical Society of America, Washington, D.C., 2001).

592. L.-S. Yan, Y. Xie, Q. Yu, A. E. Willner, D. S. Starodubov, and J. Feinberg "Performance Optimization of Chirped Return-to-Zero Format in 10-Gb/s Terrestrial Transmission Systems," **Conference on Optical Fiber Communications** '01, paper MF1, Anaheim, CA, March 2001 (Optical Society of America, Washington, D.C., 2001).

REFEREED CONFERENCE PROCEEDINGS: (CONTINUED)

593. Z. Pan, Q. Yu, Y. Xie, S.A. Havstad, A.E. Willner, D.S. Starodubov, and J. Feinberg, "Chromatic Dispersion Monitoring and Automated Compensation for NRZ and RZ Data using Clock Regeneration and Fading Without Adding Signaling," **Conference on Optical Fiber Communications** '01, paper WH5, Anaheim, CA, March 2001 (Optical Society of America, Washington, D.C., 2001).

594. Y. Xie , Q. Yu, L. Yan, O.H. Adamczyk, Z. Pan, S. Lee, A.E. Willner, and C.R. Menyuk "Enhanced PMD Mitigation using Forward-Error-Correction Coding and a First-Order Compensator," **Conference on Optical Fiber Communications** '01, paper WAA2, Anaheim, CA, March 2001 (Optical Society of America, Washington, D.C., 2001).

595. M. C. Cardakli and A. E. Willner "Optical Packet and Bit Synchronization of a Switching Node using FBG Optical Correlators," **Conference on Optical Fiber Communications** '01, paper TuW2, Anaheim, CA, March 2001 (Optical Society of America, Washington, D.C., 2001).

596. L.-S. Yan, Q. Yu, Y. Xie, and A. E. Willner "Statistical Measurement of the Combined Effect of PMD and PDL using a 10-Gb/s Recirculating Loop Testbed," **Conference on Optical Fiber Communications** '01, paper WT5, Anaheim, CA, March 2001 (Optical Society of America, Washington, D.C., 2001).

597. Q. Yu and A. E. Willner "Comparison of Optical PMD Compensation using a Variable and Fixed Differential Group Delays,"**Conference on Optical Fiber Communications** '01, paper MO2, Anaheim, CA, March 2001 (Optical Society of America, Washington, D.C., 2001).

598. M.N. Petersen, Z. Pan, S. Lee, S.A. Havstad, and A.E. Willner "Dispersion Monitoring and Compensation using a Single In-Band Subcarrier Tone,"**Conference on Optical Fiber Communications** '01, paper WH4, Anaheim, CA, March 2001 (Optical Society of America, Washington, D.C., 2001).

599. A.B. Sahin, O.H. Adamczyk, and A.E. Willner, "Dispersion Division Multiplexing Technique for Doubling the Spectral Efficiency of Subcarrier Multiplexed Data Transmission over Fiber Optical Links,"**Conference on Optical Fiber Communications** '01, paper WCC4, Anaheim, CA, March 2001 (Optical Society of America, Washington, D.C., 2001).

600. O.H. Adamczyk, A.B. Sahin, Q. Yu, S. Lee, and A.E. Willner, "Statistics of PMD-Induced Power Fading for Double Sideband and Single Sideband Subcarrier-Multiplexed Signals,"**Conference on Optical Fiber Communications** '01, paper MO5, Anaheim, CA, March 2001 (Optical Society of America, Washington, D.C., 2001).

601. R. Khosravani, S.A. Havstad, Y.W. Song, P. Ebrahimi, and A.E. Willner, "Simultaneous PMD Compensation of Multiple WDM Channels using a Single Compensator," **European Conference on Optical Communications**, paper 4.2.6, Munich, Germany, Sept. 2000.

602. S. Lee, Y. Xie, O. H. Adamczyk, and A. E. Willner, "Penalty Distribution Comparison for Different Data Formats under High PMD Values," **European Conference on Optical Communications**, paper 5.2.2, Munich, Germany, Sept. 2000.

603. Q. Yu, L.-S. Yan, S. Lee, Y. Xie, M. Hauer, Z. Pan, and A.E. Willner, "Enhanced Higher-Order PMD Compensation using a Variable Time Delay Between Polarizations," **European Conference on Optical Communications**, paper 4.2.7, Munich, Germany, Sept. 2000.

604. M.C. Cardakli, D. Gurkan, S.A. Havstad, A.E. Willner, K.R. Parameswaran, M.M. Fejer, and I. Brenner, "All-Optical Time-Slot-Interchange and Wavelength Conversion using Difference-Frequency-Generation and FBGs," **Conference on Optical Fiber Communications** '00, **Post-Deadline paper PD-34**, Balt., Md, Feb. 2000 (Optical Society of America, Washington, D.C., 2000).

REFEREED CONFERENCE PROCEEDINGS: (CONTINUED)

605. Y.W. Song, S.A. Havstad, D. Starodubov, Y. Xie, A.E. Willner, and J. Feinberg, "A Single-Mode Erbium-Doped Fiber Ring Laser with 40-nm Tuning Range using a Stretchable FBG," **OSA Optical Amplifiers Meeting**, paper OTuD5, Quebec City (Optical Society of America, Washington, D.C., 2000).

606. Y. Xie, Z. Pan, A.E. Willner, E. Salik, V. Grubsky, D. Starodubov, and J. Feinberg, "Spectrally-Efficient L-C Band EDFA Having a Continuous Inter-Band Channel Region using Sampled FBGs" **Conference on Lasers and Electro-Optics (CLEO)**, paper CWJ4, San Francisco, May 2000 (Optical Society of America, Wash., D.C., 2000).

607. Y.W. Song, Z. Pan, D. Starodubov, V. Grubsky, E. Salik, S.A. Havstad, Y. Xie, A. E. Willner, and J. Feinberg, "Efficient WDM Optical Crossconnect using Widely-Tunable FBGs," **Conference on Lasers and Electro-Optics (CLEO)**, paper CWD6, San Francisco, May 2000 (Optical Society of America, Wash., D.C., 2000).

608. S. A. Havstad, Y. Xie, A. B. Sahin, Z. Pan, A. E. Willner, and B. Fischer, "Delayed Self-Heterodyne Interferometer Measurements of Narrow Linewidth Fiber Lasers," **Conference on Lasers and Electro-Optics (CLEO)**, paper CWK30, San Francisco, May 2000 (Optical Society of America, Wash., D.C., 2000).

609. R. Khosravani and A. E. Willner, "Comparison of different modulation formats in terrestrial systems with high polarization mode dispersion," **Conference on Optical Fiber Communications** '00, paper WL5, Balt., Md, Feb. 2000 (Optical Society of America, Washington, D.C., 2000).

610. I.T. Lima, Jr., R. Khosravani, P. Ebrahimi, E. Ibragimov, A.E. Willner, and C.R. Menyuk, "Polarization Mode Dispersion Emulator," **Conference on Optical Fiber Communications** '00, paper ThB4, Balt., Md, Feb. 2000 (Optical Society of America, Washington, D.C., 2000).

611. S. Lee and A.E. Willner, "All-optical remote location of high polarization mode dispersion fiber spans using stimulated Brillouin Scattering," **Conference on Optical Fiber Communications** '00, paper TuG2, Balt., Md, Feb. 2000 (Optical Society of America, Washington, D.C., 2000).

612. Y. Xie, S. Lee, Z. Pan, J.-X. Cai, and A.E. Willner, "Tunable Compensation of the Dispersion Slope Mismatch in Dispersion-Managed Systems using a Sampled Nonlinearly-Chirped FBG," **Conference on Optical Fiber Communications** '00, paper ThS2, Balt., Md, Feb. 2000 (Optical Society of America, Washington, D.C., 2000).

613. Z.-Q. Pan, Y. Xie, S. Lee, and A.E. Willner, "Chirp-free tunable PMD compensation using Hi-Bi nonlinearly-chirped FBGs in a dual-pass configuration," **Conference on Optical Fiber Communications** '00, paper ThH2, Balt., Md, Feb. 2000 (Optical Society of America, Washington, D.C., 2000).

614. M.C. Cardakli, D. Gurkan, S.A. Havstad, and A.E. Willner, "Variable-Bit-Rate Header Recognition for Reconfigurable Networks using Fiber-Bragg-Grating Tunable Optical Correlators," **Conference on Optical Fiber Communications** '00, paper TuN2, Balt., Md, Feb. 2000 (Optical Society of America, Washington, D.C., 2000).

615. S.A. Havstad, A.B. Sahin, O.H. Adamczyk, Y. Xie, and A.E. Willner, "Distance-Independent RF Fading Compensation using a Tunable Nonlinearly-Chirped FBG in a Phase Diversity Configuration," **Conference on Optical Fiber Communications** '00, paper WM38, Balt., Md, Feb. 2000 (Optical Society of America, Washington, D.C., 2000).

616. O.H. Adamczyk, S.A. Havstad, A.B. Sahin, M.C. Cardakli, S. Lee, and A.E. Willner, "All-Optical Output-Port Contention Resolution using Subcarrier-Multiplexing," **Conference on Optical Fiber Communications** '00, paper WM41, Balt., Md, Feb. 2000 (Optical Society of America, Washington, D.C., 2000).

REFEREED CONFERENCE PROCEEDINGS: (CONTINUED)

617. O.H. Adamczyk, M.C. Cardakli, J.-X. Cai, M.I. Hayee, C. Kim, and A.E. Willner, "Coarse and Fine Bit Synchronization for WDM Interconnections using Two Subcarrier-Multiplexed Control Pilot Tones," **Conference on Lasers and Electro-Optics (CLEO)**, CTuT1, Baltimore, Md., May 1999 (Optical Society of America, Wash., D.C., 1999).

618. H. Sun, J.-X. Cai, K.-M. Feng, H. Long, M. Cardakli, M.I. Hayee, and A.E. Willner, "Tunable Compensation of Dispersion-Induced RF Power Degradation in Multiple-Channel SCM Transmission by nonlinearly-chirped FBGs," **Conference on Lasers and Electro-Optics (CLEO)**, paper CWK2, Baltimore, Md., May 1999 (Optical Society of America, Wash., D.C., 1999).

619. J. Bannister, J. Touch, A.E. Willner, and S. Suryaputra, "How Many Wavelengths Do We Really Need in an Internet Optical Backbone?," in **Protocols for High-Speed Networks VI**, ed. J. Touch and J. Sterbenz, Kluwer, 1999, ISBN 0-7923-8690-6 pp. 43-60 (sponsored by IFIP and IEEE).

620. S. Lee, R. Khosravani, J. Peng, and A.E. Willner, V. Grubsky, D.S. Starodubov, and J. Feinberg, "High-Birefringence Nonlinearly-Chirped Fiber Bragg Grating for Tunable Compensation of Polarization Mode Dispersion, " **Conference on Optical Fiber Communications** '99, paper TuS3, San Diego, CA, Feb. 1999 (Optical Society of America, Washington, D.C., 1999).

621. J.-X. Cai, K.-M. Feng, A.E. Willner, V. Grubsky, D.S. Starodubov, and J. Feinberg, "Sampled Nonlinearly-Chirped Fiber-Bragg-Grating for the Tunable Dispersion Compensation of Many WDM Channels Simultaneously," **Conference on Optical Fiber Communications** '99, paper FA7, San Diego, CA, Feb. 1999 (Optical Society of America, Washington, D.C., 1999).

622. M.I. Hayee and A.E. Willner, "Fiber Transmission Penalties due to EDFA Power Transients Resulting from Fiber Nonlinearity and ASE Noise in Add/Drop Multiplexed WDM Networks," **Conference on Optical Fiber Communications** '99, paper ThU2, San Diego, CA, Feb. 1999 (Optical Society of America, Washington, D.C., 1999).

623. R. Khosravani, S. Lee, M.I. Hayee, and A.E. Willner, "Soliton Sampling for Subcarrier-Multiplexed Transmission to Eliminate Dispersion-Induced RF Power Degradation," **Conference on Optical Fiber Communications** '99, paper ThW4, San Diego, CA, Feb. 1999 (Optical Society of America, Washington, D.C., 1999).

624. X. Jiang, M. Cardakli, K.-M. Feng J.-X. Cai, A.E. Willner, V. Grubsky, D.S. Starodubov, and J. Feinberg, "Control Monitoring of Routing Bits and Data Packets in WDM Networks using Wavelength-to-Time Mapping," **Conference on Optical Fiber Communications** '99, paper TuJ7, San Diego, CA, Feb. 1999 (Optical Society of America, Washington, D.C., 1999).

625. M.C. Cardakli, S. Lee, A.E. Willner, V. Grubsky, D. Starodubov, and J. Feinberg, "All-Optical Packet Header Recognition and Switching in a Reconfigurable Network using Fiber Bragg Gratings for Time-to-Wavelength Mapping and Decoding," **Conference on Optical Fiber Communications** '99, paper ThM4, San Diego, CA, Feb. 1999 (Optical Society of America, Washington D.C., 1999).

626. S.A. Havstad, B. Fischer, A.E. Willner, and M.G. Wickham, "Dynamic Fiber Loop-Mirror-Filter (LMF) Based on Pump-Induced Saturable Gain or Absorber Gratings," **Conference on Optical Fiber Communications** '99, paper ThA4, San Diego, CA, Feb. 1999 (Optical Society of America, Washington, D.C., 1999).

627. Joe Bannister, Joe Touch, Alan Willner, and Stephen Suryaputra, "How Many Wavelengths Do We Really Need in an Optical Backbone Network?," **IEEE Gigabit Networking Workshop '99,** New York, NY.

REFEREED CONFERENCE PROCEEDINGS: (CONTINUED)

628. D.S. Starodubov, V. Grubsky, A. Skorucak, J. Feinberg, K.-M. Feng, J.-X. Cai, and A.E. Willner, "Novel Fiber Amplitude Modulators in Dynamic Channel Power Equalization in WDM Systems," **Conference on Optical Fiber Communications** '98, **Post-Deadline Session**, paper PD-8, San Jose, CA, Feb. 1998 (Optical Society of America, Washington, D.C., 1998).

629. J. Yoo, J.E. Leight, C. Kim, G. Giaretta, W. Yuen, and A.E. Willner, "Experimental Demonstration of a Multihop Shuffle Network using 622-Mbps Data Relay in a WDM Multiple-Plane Optical Interconnection With VCSEL and MQW/DBR Detector Arrays," **Conference on Lasers and Electro-Optics**, **Post-Deadline Session**, paper CPD-21, Baltimore, MD, May 1997 (Optical Society of America, Wash., D.C., 1997).

630. J.-X. Cai, K.-M. Feng, A.E. Willner, V. Grubsky, D.S. Starodubov, and J. Feinberg, "Dynamic Dispersion Compensation in a 10-Gb/s Optical System using a Novel Nonlinearly-Chirped Fiber Bragg Grating," **Conference on Optical Fiber Communications** '98, San Jose, CA, Feb. 1998 (Optical Society of America, Washington, D.C., 1998).

631. X. Jiang, X.P. Chen, and A.E. Willner, "Wavelength Independent Packet Header Replacement using a Long CW Region Generated Directly from the Packet Flag," **Conference on Optical Fiber Communications** '98, San Jose, CA, Feb. 1998 (Optical Society of America, Washington, D.C., 1998).

632. M.I. Hayee and A. E. Willner, "NRZ vs. RZ in 10-40 Gb/s Dispersion-Managed WDM Transmission Systems," **Conference on Optical Fiber Communications** '98, San Jose, CA, Feb. 1998 (Optical Society of America, Washington D.C., 1998).

633. K.-M. Feng, V. Grubsky, D.S. Starodubov, J.-X. Cai, A.E. Willner, and J. Feinberg, "Tunable Nonlinearly-Chirped Fiber Bragg Grating for use as a Dispersion Compensator with a Voltage-Controlled Dispersion," **Conference on Optical Fiber Communications** '98, San Jose, CA, Feb. 1998 (Optical Society of America, Washington D.C., 1998).

634. T. Sangsiri, S. Havstad, C. Kim, X. Jiang, B. Hoanca, and A.E. Willner, "Bit Synchronization using Subcarriers for Control Signaling in Optical Networks,"**Conference on Optical Fiber Communications** '98, San Jose, CA, Feb. 1998 (Optical Society of America, Washington D.C., 1998).

635. J. Touch, J. Bannister, and A.E. Willner, "SWIFT: Smart WDM IP Flow Technology," **IEEE Gigabit Networking Workshop GBN '98**, San Francisco, CA, Mar. 1998.

636. J.X. Cai, K.-M. Feng, and A.E. Willner, "Simultaneous Compensation of Fast Add/Drop Power-Transients and Equalization of Inter-Channel Power Differentials for Robust WDM Systems with Cascaded EDFAs," Topical Meeting on **Optical Amplifiers and Their Applications**, paper MC6, Victoria, Canada, July (Optical Society of America, Washington, D.C., 1997).

637. X.P. Chen, B. Hoanca, K.-M. Feng, J.-X. Cai, and A.E. Willner, "Experimental Demonstration of Fast Simultaneous Wavelength Switching and Time Demultiplexing using a Nonlinear Optical Loop Mirror," **Conference on Lasers and Electro-Optics**, paper CTHP2, Baltimore, MD, May 1997 (Optical Society of America, Wash., D.C., 1997).

638. S. Schröder, R. Teschendorf, and A. E. Willner, "Contention Resolution of High-Speed WDM Packets using a Dynamically- Controlled Multiple-Wavelength Fiber Loop Buffer and Wavelength Shifting," **Conference on Lasers and Electro-Optics**, paper CFI2, Baltimore, MD, May 1997 (Optical Society of America, Wash., D.C., 1997).

639. J. Yoo, J.E. Leight, G. Giaretta, W. Yuen, A.E. Willner, and C.J. Chang-Hasnain, "Experimental Demonstration of a 4-Plane 2-D Multiple-Wavelength Optical Interconnection using Integrated VCSEL

REFEREED CONFERENCE PROCEEDINGS: (CONTINUED)

Arrays And MQW/DBR Detectors," **Conference on Lasers and Electro-Optics**, paper CME4, Baltimore, MD, May 1997 (Optical Society of America, Wash., D.C., 1997).

640. M.I. Hayee and A.E. Willner, "Effects of Randomness of Dispersion-Zero Wavelength and Relative Channel Location in High-Speed WDM Systems," **Conference on Lasers and Electro-Optics**, paper CTHV6, Baltimore, MD, May 1997 (Optical Society of America, Wash., D.C., 1997).

641. K.-M. Feng, J.-X. Cai, X. P. Chen, A. E. Willner, and D. A. Smith, "Experimental Demonstration of Dynamic High-Speed Equalization of Three Channels using Wavelength Demultiplexers and Acousto-Optic Modulators," **Conference on Optical Fiber Communications** '97, paper ThS4, Dallas, TX, Feb. 1997 (Optical Society of America, Washington D.C., 1997).

642. T. Sangsiri, M. I. Hayee, B. Hoanca, W. Shieh, and A. E. Willner, "Stability and Dynamic Range of a Mach-Zehnder Wavelength Shifter," **Conference on Optical Fiber Communications** '97, paper WL52, Dallas, TX, Feb. 1997 (Optical Society of America, Washington D.C., 1997).

643. J.-X. Cai, K.-M. Feng, X.-P. Chen, and A.E. Willner, "Equalization of Nonuniform EDFA Gain using a Fiber Loop Mirror," **Conference on Optical Fiber Communications** '97, paper WL34, Dallas, TX, Feb. 1997 (Optical Society of America, Washington D.C., 1997).

644. M. I. Hayee and A. E. Willner, "Pre-Compensation of Dispersion and Nonlinearities in 10 and 20 Gb/s WDM Systems," **Conference on Optical Fiber Communications** '97, paper WL39, Dallas, TX, Feb. 1997 (Optical Society of America, Washington D.C., 1997).

645. W. Shieh and A.E. Willner, "Demonstration of Output-Port Contention Resolution in a 2X2 WDM Switching Node Based on All-Optical Wavelength Shifting and Subcarrier-Multiplexed Routing-Control Headers," **Conference on Optical Fiber Communications** '96, **Post-Deadline paper** PD-36, San Jose, CA, Feb. 1996 (Optical Society of America, Washington D.C., 1996).

646. E. Park, D. Norte, and A.E. Willner, "Demonstration of Multiple-Wavelength-Input All-Optical Wavelength-Shifting Spatial and Temporal Techniques with Subcarrier-Multiplexed Control for Self-Routing," **Conference on Optical Fiber Communications** '96, **Post-Deadline paper** PD-34, San Jose, CA, Feb. 1996 (Optical Society of America, Washington D.C., 1996).

647. W. Shieh and A.E. Willner, "A Wavelength-Routing Node by using Multifunctional Semiconductor Optical Amplifiers and Multiple-Pilot-Tone-Coded Subcarrier Control Headers," **IEEE LEOS Summer Topical Meeting on Broadband Optical Networks**, paper MA5, Keystone, Colorado, Aug. (IEEE, Piscataway, New Jersey, 1996).

648. D. Norte and A.E. Willner, "Demonstrations of All-Optical Conversions Between the RZ and NRZ Data Formats Incorporating Noninverting Wavelength Shifting Leading to Format Transparency," **IEEE LEOS Summer Topical Meeting on Broadband Optical Networks**, paper MB5, Keystone, Colorado, Aug. (IEEE, Piscataway, New Jersey, 1996).

649. J.E. Leight, J. Yoo, and A.E. Willner, "Optical Crosstalk and Signal Power Limitations in Simultaneous 2-D Multiple-Plane WDM Optical Interconnects," **IEEE Lasers and Electro-Optics Society Annual Meeting**, Proceedings, paper TuY2, Nov. 1996, Boston, MA (IEEE/LEOS, Piscataway, NJ, 1996).

650. D.A. Smith, Z. Bao, M.L. Heston, A.E. Willner, S.H. Huang, X.Y. Zou, K. Youden, and K. Li, "Dynamic Power Equalization in WDM Networks using Acousto-Optic Filters," Topical Meeting on **Optical Amplifiers and Their Applications**, paper FA3, Monterey, CA, July (Optical Society of America, Washington D.C., 1996).

REFEREED CONFERENCE PROCEEDINGS: (CONTINUED)

651. J.-C. Wu, J.A. Silvester, and A.E. Willner, "Optimal Schedules for WDM Networks using Pipelined Slow Tunable Devices," **FifthInternational Conference on Computer Communications and Networks (IC^{3}N)**, paper 76, October, Rockville, MD (IEEE, Piscataway, New Jersey, 1996).

652. S.H. Huang, X.Y. Zou, S.-M. Hwang, A.E. Willner, Z. Bao, and D.A. Smith, "Experimental Demonstration of Active Equalization and ASE Suppression of Three 2.5 Gbit/s WDM-Network Channels over 2,500 km using AOTFs as Transmission Filters," **Conference on Lasers and Electro-Optics**, paper CMA4, Anaheim, CA, June 1996 (Optical Society of America, Wash., D.C., 1996).

653. E. Park and A.E. Willner, "Survivability of QPSK-Encoded Subcarrier Signals in an All-Optical Wavelength-Shifting System," **Conference on Lasers and Electro-Optics**, paper CFG7, Anaheim, CA, June 1996 (Optical Society of America, Wash., D.C., 1996).

654. S.-M. Hwang, X.Y. Zou, S.H. Huang, W. Shieh, and A.E. Willner, "Passive Equalization of Four 2.5-Gbit/s WDM Channels over 1,000 km using Notch Filters," **Conference on Lasers and Electro-Optics**, paper CThC21, Anaheim, CA, June 1996 (Optical Society of America, Wash., D.C., 1996).

655. W. Shieh and A.E. Willner, "SNR Improvement of Four-Wave Mixing Wavelength Shifting by Noise Prefiltering in a Semiconductor Optical Amplifier," **Conference on Lasers and Electro-Optics**, paper CThB5, Anaheim, CA, June 1996 (Optical Society of America, Wash., D.C., 1996).

656. S.H. Huang, X.Y. Zou, S.-M. Hwang, A.E. Willner, Z. Bao, and D.A. Smith, "Experimental Demonstration of Dynamic Equalization of Three 2.5 Gbit/s WDM Channels over 1,000 km using Acousto-Optic Tunable Filters," **Conference on Optical Fiber Communications** '96, paper WM6, San Jose, CA, Feb. 1996 (Optical Society of America, Washington D.C., 1996).

657. E. Park and A.E. Willner, "Network Demonstration of Self-Routing Wavelength Packets using an All-Optical Wavelength Shifter and QPSK Subcarrier Routing Control," **Conference on Optical Fiber Communications** '96, paper WD6, San Jose, CA, Feb. 1996 (Optical Society of America, Washington D.C., 1996).

658. M.I. Hayee, X.Y. Zou and A.E. Willner, "Degradations Due to Both Dispersion and SPM/CPM on Dispersion-Managed WDM Long-Distance Systems," **Conference on Optical Fiber Communications** '96, paper TuN7, San Jose, CA, Feb. 1996 (Optical Society of America, Washington D.C., 1996).

659. W. Shieh, S.H. Huang, and A.E. Willner, "A Polarization-Independent and Contrast-Ratio-Enhancing Module for All-Optical Wavelength Shifting using SOA's," **Conference on Optical Fiber Communications** '96, paper WG5, San Jose, CA, Feb. 1996 (Optical Society of America, Washington D.C., 1996).

660. W. Shieh, E. Park and A.E. Willner, "All-Optical Wavelength Shifting of Microwave Subcarriers by using Four-Wave Mixing in a Semiconductor Optical Amplifier," **Conference on Optical Fiber Communications** '96, paper WH4, San Jose, CA, Feb. 1996 (Optical Society of America, Washington D.C., 1996).

661. D. Norte and A.E. Willner, "Demonstration of an All-Optical Data Format Transparent WDM-to-TDM Network Node With Extinction Ratio Enhancement for Reconfigurable WDM Networks," **Conference on Optical Fiber Communications** '96, paper WD5, San Jose, CA, Feb. 1996 (Optical Society of America, Washington D.C., 1996).

662. D. Norte and A.E. Willner, "Simultaneous Probe and Pump Extinction Ratio Enhancement Demonstration in All-Optical Noninverted Wavelength Shifting," **Conference on Optical Fiber Communications** '96, paper WM7, San Jose, CA, Feb. 1996 (Optical Society of America, Washington D.C., 1996).

663. M.L. Heston, D.A. Smith, Z. Bao, A. Khaydarov, A.E. Willner, S.-M. Hwang, S.H. Huang, and X.Y. Zou, "Use of the Acousto-Optic Tunable Filter for Optical Spectrum Analysis and EDFA Power Equalization in

REFEREED CONFERENCE PROCEEDINGS: (CONTINUED)

WDM Systems," **Conference on Optical Fiber Communications** '96, paper ThL3, San Jose, CA, Feb. 1996 (Optical Society of America, Washington D.C., 1996).

664. J.E. Leight, S. Homan, A.E. Willner, G. Giaretta, M. Li, and C.J. Chang-Hasnain, "Demonstration of a Reconfigurable Wavelength-Multiplexed Multiple-Plane Optical Interconnection," **Conf. on Lasers and Electro-Optics**, **Post-Deadline Session**, paper CPD6, Balt., Md., May 1995 (Optical Society of America, Wash., D.C., 1995).

665. A.D. Norte and A.E. Willner, "Multi-Stage All-Optical WDM-to-TDM-to-WDM and TDM-to-WDM-to-TDM Data Format Conversion and Reconversion Through 80 km of Fiber and 3 EDFAs," **IEEE LEOS Summer Topical Meeting on Technologies for a Global Information Infrastructure**, paper WA5, Keystone, Colorado, Aug. 1995 (IEEE, Piscataway, New Jersey, 1995).

666. X.Y. Zou, S.-M. Hwang, and A.E. Willner, "Limitations in Number of WDM Channels When using Dispersion Management and Mid-Span Phase Conjugation," **IEEE LEOS Summer Topical Meeting on Technologies for a Global Information Infrastructure**, paper MC3, Keystone, Colorado, Aug. 1995 (IEEE, Piscataway, New Jersey, 1995).

667. S.-H. Huang, X.Y. Zou, and A.E. Willner, "9,000-km WDM Transmission of Three 2.5-Gbit/s Channels Covering a 5-nm Wavelength Range", **Topical Meeting on Optical Amplifiers and Their Applications**, Proceedings, paper ThD14, Davos, Switzerland, June, 1995 (Optical Society of America, Wash., D.C., 1995).

668. S. Homan and A.E. Willner, "High-Capacity Optical Storage using Multiple Wavelengths, Multiple Layers, and Volume Holograms," **Society of Photo-Instrumentation Engineers (SPIE) Conference on Optical Data Storage**, Technical Digest, **Post-Deadline Session**, July, 1995, San Diego, CA (SPIE, Bellingham, Wash., 1995).

669. S.-M. Hwang and A.E. Willner, "Active Equalization of Non-Uniform EDFA Gain by using Multiple AOTF Passbands for Megameter WDM Transmission," **Conf. on Lasers and Electro-Optics**, paper CTuS3, Balt., Md., May 1995 (Optical Society of America, Wash., D.C., 1995).

670. W. Shieh and A.E. Willner, "Optimal Conditions for High-Speed All-Optical SOA-Based Wavelength Shifting," **Conf. on Lasers and Electro-Optics**, paper CThT4, Balt., Md., May 1995 (Optical Society of America, Wash., D.C., 1995).

671. E. Park and A.E. Willner, "Simultaneous All-Optical Header Replacement and Wavelength Shifting for a Dynamically-Reconfigurable WDM," **Conference on Optical Fiber Communication**, paper TuQ4, San Diego, CA, Feb. 1995 (Optical Society of America, Wash., D.C., 1995).

672. A.D. Norte and A.E. Willner, "All-Optical TDM-to-WDM Data-Format Conversion in a Dynamically-Reconfigurable WDM Network," **Conference on Optical Fiber Communication**, paper WJ6, San Diego, CA, Feb. 1995 (Optical Society of America, Wash., D.C., 1995).

673. X.-Y. Zou, S.-M. Hwang, and A.E. Willner, "Compensation of Non-Uniform Gain Induced by Raman Scattering and EDFA's in Ultra-Long-Distance WDM Links," **Conference on Optical Fiber Communication**, paper WL6, San Diego, CA, Feb. 1995 (Optical Society of America, Wash., D.C., 1995).

674. J.E. Leight and A.E. Willner, "Reduced Switching Delay in 2-D WDM Multiple-Plane Optical Interconnections using Multiple-Wavelength VCSEL Arrays," **IEEE/LEOS Topical Meeting on Smart Pixels**, paper W1.6, Lake Tahoe, Nevada, July 1994 (IEEE/LEOS, Piscataway, NJ, 1994).

675. A.E. Willner and W. Shieh, "Optimal Spectral and Power Parameters for All-Optical Wavelength Shifting: Single Stage, Fanout, and Cascadability," **Conference on Optical Fiber Communication**, paper ThC3, San Jose, CA, Feb. 1994 (Optical Society of America, Wash., D.C., 1994).

REFEREED CONFERENCE PROCEEDINGS: (CONTINUED)

676. A.E. Willner and S.-M. Hwang, "Optically-Amplified WDM Ring Network Incorporating Channel-Dropping Filters," **Conference on Optical Fiber Communication**, paper WI2, San Jose, CA, Feb. 1994 (Optical Society of America, Wash., D.C., 1994).

677. A.E. Willner and S.-M. Hwang, "Passive Equalization of Non-Uniform EDFA Gain by Optical Filtering for Megameter Transmission of 20 WDM Channels through a Cascade of EDFA's," **Conference on Optical Amplifiers and Their Applications**, Proceedings, Yokohama, Japan, July, 1993 (Optical Society of America, Wash., D.C., 1993).

678. S.-M. Hwang and A.E. Willner, "Guidelines for Optimizing System Performance for 20 WDM Channels Propagating through a Cascade of EDFA's," **Conference of the IEEE Lasers and Electro-Optics Society**, Proceedings, paper OC5.3, Nov. 1993, San Jose, CA (IEEE/LEOS, Piscataway, New Jersey, 1993).

679. A.E. Willner, C.J. Chang-Hasnain, and J.E. Leight, "2-D WDM Optical Interconnects using Multiple-Wavelength VCSEL's for Simultaneous and Reconfigurable Communication Between Many Planes," Topical Meeting on **Photonics in Switching**, Proceedings, pp. 172-175, Palm Springs, CA, March 15, 1993 (Optical Society of America, Wash., D.C., 1993).

680. A.D. Norte, A.E. Willner, W. Shieh, and A.R. Tanguay, Jr., "Multiple-Plane Optical Interconnections using Through-Wafer Hollow Dielectric Waveguide Vias," Topical Meeting on **Optical Design for Photonics**, Proceedings, paper OWA15, pp. 175-178, Palm Springs, CA, March 15, 1993 (Optical Society of America, Wash., D.C., 1993).

681. A.R. Cisneros, S.F. Habiby, and A.E. Willner, "Photonic Contention Resolution Devices, A Laboratory Demonstration," **Conf. on Optical Fiber Communication**, Technical Digest, pp. 94-95, San Jose, CA, Feb. (Optical Society of America, Wash., D.C., 1993).

682. A.E. Willner, M.W. Maeda, and J.R. Wullert II, "Comparison of Central and Distributed Control in a WDMA Optical Star Network," **Int'l Conf. on Communication,** Proceedings, pp. 824-828, Chicago, Ill., June 1992 (IEEE, Piscataway, N.J., 1992).

683. A.E. Willner, "SNR Analysis of Crosstalk and Filtering Effects in an Amplified Multi-Channel Direct-Detection Dense-WDM System," **Conf. on Optical Fiber Communication**, Technical Digest, pp. 171-172, San Jose, CA, Feb. (Optical Society of America, Wash., D.C., 1992).

684. M.W. Maeda, J.R. Wullert II, A.E. Willner, and J. Patel, "Wavelength-Division Multiple-Access Network Based on Centralized Common-Wavelength Control," **Conf. on Optical Fiber Communication**, Technical Digest, pp. 85-86, San Jose, CA, Feb. (Optical Society of America, Wash., D.C., 1992).

685. E.L. Goldstein, L. Eskildsen, T.H. Wu, M. Andrejco, A.E. Willner, V. Shah, L. Curtis, D. Mahoney, W.C. Young, A. Yi-Yan, H. Izadpanah, C.E. Zah, N. Andreadakis, F. Favire, B. Pathak, T.P. Lee, and C. Lin, "Application of Quasi-Distributed Optical Amplification to SONET Self-Healing Inter-Exchange Networks," **Conf. on Optical Fiber Communication**, Technical Digest, pp. 254-255, San Jose, CA, Feb. 1992 (Optical Society of America, Wash., D.C., 1992).

686. L. Eskildsen, E.L. Goldstein, M. Andrejco, V. Shah, L. Curtis, D. Mahoney, H. Johnson, C.E. Zah, N. Andreadakis, F. Favire, B. Pathak, A.E. Willner, H. Izadpanah, A. Yi-Yan, T.H. Wu, T.P. Lee, W.C. Young, and C. Lin, "Properties of Spontaneous Emission and Signal Power in Saturated Fiber-Amplifier Cascades," **Conf. on Lasers and Electro-Optics**, Technical Digest, pp. 352-354, Anaheim, CA, May 1992 (Optical Society of America, Wash., D.C., 1992).

REFEREED CONFERENCE PROCEEDINGS: (CONTINUED)

687. A.E. Willner, A.A.M. Saleh, H.M. Presby, D.J. DiGiovanni, and C.A. Edwards, "Star Couplers with Gain using Multiple Erbium-Doped Fibers Pumped with a Single Laser," **Conf. on Lasers and Electro-Optics**, Technical Digest, pp. 108-110, Balt., Md., May 1991 (Optical Society of America, Wash., D.C., 1991).

688. A.E. Willner and E. Desurvire, "Effect of Gain Saturation on Receiver Sensitivity in 1 Gb/s Multichannel FSK Direct-Detection Systems using Erbium-Doped Fiber Preamplifiers," **Conf. on Optical Fiber Communication**, Technical Digest, pp. 163-164, San Diego, CA, Jan. 1991 (Optical Society of America, Wash., D.C., 1991).

689. A.E. Willner, E. Desurvire, H.M. Presby and C.A. Edwards, "FDMA-FSK 1 Gb/s Star Network using LD-Pumped Erbium-Doped Fiber Preamplifiers with Optimal Noise Filtering", **Topical Meeting on Optical Amplifiers and Their Applications**, Proceedings, pp. 248-251, Monterey, CA, Aug. 6, 1990 (Optical Society of America, Wash., D.C., 1990).

690. A.E. Willner, I.P. Kaminow, M. Kuznetsov, J. Stone, and L.W. Stulz, "1.2 Gb/s Closely Spaced FDMA-FSK Direct-Detection Star Network using Two-Electrode DFB Lasers," **Conf. on Lasers and Electro-Optics**, Technical Digest, pp. 310-312, Anaheim, CA, May 1990 (Optical Society of America, Wash., D.C., 1990).

691. A.E. Willner, "Analytical Model for Performance Optimization of a FSK-to-ASK System using a Fabry-Perot Demodulator," **Conf. on Lasers and Electro-Optics**, Technical Digest, pp. 416-418, Anaheim, CA, May 1990 (Optical Society of America, Wash., D.C., 1990).

692. A.E. Willner, M. Kuznetsov, D. Marcuse, I.P. Kaminow, J. Stone, L.W. Stulz, and C. A. Burrus, "FM/FSK Characterization of Tunable Two-Electrode DFB Lasers and Their Performance with Noncoherent Detection," **Conf. on Optical Fiber Communication**, Technical Digest, pp. 184-185, San Francisco, CA, Jan. 1990 (Optical Society of America, Wash., D.C., 1990).

693. M.N. Ruberto, R. Scarmozzino, A.E. Willner, D.V. Podlesnik, and R.M. Osgood, Jr., "The Maskless Photochemical Etching of Optical Components on GaAs/AlGaAs Heterostructures," **Conference of the IEEE Lasers and Electro-Optics Society**, Technical Digest, pp. 185-188, Oct. 1989 (IEEE, Wash., D.C., 1989).

694. M.N. Ruberto, A.E. Willner, D.V. Podlesnik, and R.M. Osgood, Jr., "Laser Direct Writing of Integrated Optical Components," **Conf. on Lasers and Electro-Optics**, Technical Digest, pp. 394-396, April 1989 (Optical Society of America, Wash., D.C., 1989).

695. A.E. Willner, D.J. Blumenthal, M.N. Ruberto, D.V. Podlesnik, and R.M. Osgood, Jr., "Laser Fabricated GaAs Waveguiding Structures," **Conference of the IEEE Lasers and Electro-Optics Society**, Technical Digest, pp. 90-93, Nov. 1988 (IEEE, Wash., D.C., 1988).

696. M.N. Ruberto, A.E. Willner, D.V. Podlesnik, and R.M. Osgood, Jr., "Photogenerated Carrier Confinement During the Laser-Controlled Aqueous Etching of GaAs/AlGaAs Multilayers," in **Laser and Particle Beam Chemical Processes on Surfaces**, A. W. Johnson, G. L. Loper, and T. W. Sigmon, eds., Materials Research Society Proceedings, Symp. **B**, pp. 279-284, Fall 1988 (North-Holland, Amsterdam, 1989).

697. A.E. Willner, D.V. Podlesnik, H.H. Gilgen, and R.M. Osgood, Jr., "Ultrafast Aqueous Etching of Gallium Arsenide," in **Photon, Beam and Plasma Stimulated Chemical Processes at Surfaces**, V.M. Donnelly, I.P. Herman, and M. Hirose, eds., Materials Research Society Proceedings, pp. 75-83, Fall 1986 (North-Holland, Amsterdam, 1987).

698. A.E. Willner, D.V. Podlesnik, H.H. Gilgen, and R.M. Osgood, Jr., "Inhibition of Laser-Induced Photochemical Reactions in Semiconductors by Background Illumination," **Conf. on Laser Electro-Optics**, Technical Digest, pp. 271-273, April 1987 (Optical Society of America, Wash. D.C., 1987).

REFEREED CONFERENCE PROCEEDINGS: (CONTINUED)

699. R.W. Ade, A.E. Willner, E.R. Fossum, and R.M. Osgood, Jr., "GaAs Detector Structure for Vertically Coupled Fiber Optic Interconnects," **Conf. on Laser Electro-Optics**, Technical Digest, pp. 164-166, April 1987 (Optical Society of America, Wash. D.C., 1987).

700. A.E. Willner, D.V. Podlesnik, H.H. Gilgen, and R.M. Osgood, Jr., "Laser Induced High-Aspect Etching of InP: Experiment and Theory," **Conf. on Laser Electro-Optics**, Technical Digest, pp. 112-114, June 1986 (Optical Society of America, Wash. D.C., 1986).

701. D.V. Podlesnik, A.E. Willner, R. Beach, H.H. Gilgen, and R.M. Osgood, Jr., "Spontaneous Ripple Formation Due to Ultraviolet Surface Oxidation of Semiconductors," **International Quantum Electronics Conference**, Technical Digest, pp. 156-158, June 1986 (Optical Society of America, Wash. D.C., 1986).

702. D.V. Podlesnik, A.E. Willner, R. Beach, H.H. Gilgen, and R.M. Osgood, Jr., "Spontaneous Ripple Formation Due to Ultraviolet Surface Oxidation of Semiconductors," **International Quantum Electronics Conference**, Technical Digest, pp. 156-158, June 1986 (Optical Society of America, Wash. D.C., 1986).

NON-REFEREED PAPERS:

1. Alan E. Willner, "Career Focus: The Ins and Outs of Technical Proposals," **Optica Optics & Photonics News,** vol. **36**, no. 05, pp. 20-22, May 2025.

2. Alan E. Willner, "Career Focus: Looking Deeper into 'Why?'," **Optica Optics & Photonics News,** vol. **35**, no. 11, pp. 22-23, November 2024.

3. Alan E. Willner, "Career Focus: How to Maximize Short-Term Engagements," **Optica Optics & Photonics News,** vol. **35**, no. 6, pp. 20-22, June 2024.

4. Alan E. Willner, "Career Focus: Embracing One-on-One Feedback," **Optica Optics & Photonics News,** vol. **35**, no. 3, pp. 20-22, March 2024.

   **** Paper selected as "Editors' Pick Article". ****

5. Huibin Zhou, Yuxiang Duan, Hao Song, Zile Jiang, Murale Ramakrishnan, Xinzhou Su, Robert Bock, Moshe Tur, Alan E. Willner, "Ranging Through Turbid Underwater Using Structured Optical Beams," **SPIE Defense + Commercial Sensing, Ocean Sensing and Monitoring XV**, paper 13061-9, April 2024.

6. Gabriella Bosco, Connie J. Chang-Hasnain, Thomas G. Giallorenzi, Alan E. Willner, and Peter J. Winzer, "Editorial Celebrating the 40th Anniversary of the Journal of Lightwave Technology," **IEEE/Optica Journal of Lightwave Technology**, vol. **41**, no. 5, pp. 1267-1268, 2023.

7. Alan E. Willner, "The Value of Patents: It's More than the Money," **Optica Optics & Photonics News,** vol. **34**, no. 10, pp. 18-20, November 2023.

8. Alan E. Willner, "Career Focus: Exponential Improvement Through Collaboration," **Optica Optics & Photonics News,** vol. **34**, no. 6, June, pp. 24-25, 2023.

9. Alan E. Willner, "Career Focus: From Bad Ideas Come Good Ideas," **Optica Optics & Photonics News,** vol. **34**, no. 2, Feb., pp. 20-22, 2023.

   **** Paper selected as "Editors' Pick Article". ****

NON-REFEREED PAPERS: (CONTINUED)

10. Alan E. Willner, "Career Focus: When Presenting, the Audience Is Always Right," **Optica Optics & Photonics News,** vol. **33**, no. 8, Sept., pp. 20-22, 2022.

11. Alan E. Willner, "Career Focus: Interviewing and Working in a (Post-)Pandemic World," **Optica Optics & Photonics News,** vol. **33**, no. 4, April, pp. 20-22, 2022.

12. Alan E. Willner, "Career Focus: Owning the Problem," **OSA Optics & Photonics News,** vol. **32**, no. 11, December, pp. 20-22, 2021.

13. Alan E. Willner, "Career Focus: The Benefits of Volunteering," **OSA Optics & Photonics News,** vol. **32**, no. 7, July/August, pp. 18-20, 2021.

    **** Paper selected as "Editors' Pick Article". ****

14. Alan E. Willner, "Career Focus: Understanding Ph.D. Applications," **OSA Optics and Photonics News,** December, pp. 19-21, 2020.

15. Alan E. Willner, "Career Focus: How (and How Not) to Acquire a Mentor," **OSA Optics and Photonics News,** July/August, pp. 20-21, 2020.

16. Jeremy Upham, M. Zahirul Alam, Yiyu Zhou, Mohammad Karimi, Orad Reshef, Cong Liu, Alan E. Willner, and Robert W. Boyd, "Time Refraction in an Epsilon-Near-Zero Material," **Photonics Online Meetup (POM),** online workshop, Jan. 2020.

17. Jiapeng Zhao, Yiyu Zhou, Boris Braverman, Cong Liu, Kai Pang, Nicholas Steinhoff, Alan Willner, Robert Boyd, " Investigate the Performance of Real-time Adaptive Optics Correction in a Turbulent High-dimensional Quantum Communication Channel," **Society of Photo-Instrumentation Engineers (SPIE) Optics and Photonics, Photonics West, Free-Space Laser Communications XXXII,** paper 11272-48, San Francisco, CA, Feb. 2020 (SPIE, Bellingham, Wash., 2020).

18. Ohad Harlev, Paul F. McManamon, Armand Vedadi, Alan E. Willner, Dipayan Choudhary, "A Revolutionary Optical Hyper Data Center," **Society of Photo-Instrumentation Engineers (SPIE) Optics and Photonics, Photonics West, Free-Space Laser Communications XXXII,** paper 11272-62, San Francisco, CA, Feb. 2020 (SPIE, Bellingham, Wash., 2020).

19. Alan E. Willner, "AOP is a Go-To Journal: Publishing 'Optical Communications using Orbital Angular Momentum Beams'," **Guest Editorial**, **Advances in Optics and Photonics**, vol. **11**, no. 3, 2019.

    **** One of the 10 most downloaded articles from OSA's review journal in July 2019. ****

20. Alan E. Willner, "Career Focus: Allow Me to Introduce Myself," **OSA Optics and Photonics News**, July/August, pp. 20-21, 2019.

    **** Paper selected as "Editors' Pick Article". ****

21. John N. Lee, Alan E. Willner, Doug Hargis, and Gabriella Bosco, "Paul W. Shumate (1942-2019) in Memory," **IEEE/OSA Journal of Lightwave Technology**, vol. **37**, no. 13, pp. 2896-2897, 2019.

22. M. Zahirul Alam, Yiyu Zhou, Mohammad Karimi, Orad Reshef, Cong Liu, Alan E. Willner, Jeremy Upham, and Robert W. Boyd, "Adiabatic Wavelength Conversion in an Epsilon-near-zero Material by Time Refraction", **Society of Photo-Instrumentation Engineers (SPIE) Optics and Photonics, Photonics North**, paper 255-tKSq-272, Quebec City, Canada, May 2019 (SPIE, Bellingham, WA, 2019).

23. Jing Du, Zhe Zhao, Runzhou Zhang, Guodong Xie, Long Li, Haoqian Song, Kai Pang, Cong Liu, Hao Song, Ahmed Almaiman, Shlomo Zach, Nadav Cohen, Moshe Tur, and Alan E. Willner, "Experimental

NON-REFEREED PAPERS: (CONTINUED)

Demonstration of Object Identification by Analyzing 2-dimensional Complex Spectra of Laguerre-Gaussian Modes," **Society of Photo-Instrumentation Engineers (SPIE) Optics and Photonics, Optical Engineering and Applications,** paper 11135-20, San Diego, CA, Aug. 2019 (SPIE, Bellingham, Wash., 2019).

24. Paul F. McManamon, Armand Vedadi, Alan E. Wilner, Dipayan Choudhary, and Ohad Harlev, "Lyteloop Data 'Storage in Motion' Using High-Bandwidth Laser Communications," **Society of Photo-Instrumentation Engineers (SPIE) Optics and Photonics, Next-Generation Optical Communication: Components, Sub-Systems, and Systems VIII,** paper 10947-15, San Francisco, CA, Feb. 2019 (SPIE, Bellingham, Wash., 2019).

25. Ari N. Willner, Peicheng Liao, Kaiheng Zou, Arne Kordts, Maxim Karpov, Martin H. P. Pfeiffer, Yinwen Cao, Fatemeh Alishahi, Ahmad Fallahpour, Tobias J. Kippenberg, and Alan E. Willner, "Experimental Demonstration of Three-Fold Wavelength Multicasting of a 64-QAM 120-Gbit/s Data Channel Using a Kerr Frequency Comb and Nonlinear Wave Mixing," **Society of Photo-Instrumentation Engineers (SPIE) Optics and Photonics, Next-Generation Optical Communication: Components, Sub-Systems, and Systems VIII,** paper 10947-22, San Francisco, CA, Feb. 2019 (SPIE, Bellingham, Wash., 2019).

26. Alan E. Willner, "Career Focus: What's Bothering the Reviewer?," **OSA Optics and Photonics News**, Feb. 2019.

27. Bishara Shamee, Amirhossein Mohajerin-Ariaei, Ahmed Almaiman, Yinwen Cao, Fatemeh Alishahi, and Alan E. Willner, "Weighted Raised Cosine Waveform with Reduced Peak to average power ratio for optical transmission," **Society of Photo-Instrumentation Engineers (SPIE) Optics and Photonics, Conference on Optical Modeling and Performance Predictions X,** paper 10743-19, San Diego, CA, Sept. 2018 (SPIE, Bellingham, Wash., 2018).

28. Harshil Dave, Peicheng Liao, Stewart TM Fryslie, Zihe Gao, Bradley J Thompson, Alan E. Willner, and Kent D. Choquette, "Effects of Mutual Coherence on Digital Modulation of Photonic Crystal VCSEL Arrays," **International Nano-Optoelectronics Workshop (iNOW)**, Berkeley, CA, July 2018.

29. Bishara Shamee, Amirhossein Mohajerin-Ariaei, Ahmed Almaiman, Yinwen Cao, Fatemeh Alishahi and Alan E. Willner, "Weighted Raised Cosine Waveform with Reduced Peak to Average Power Ratio for Optical Transmission," **Society of Photo-Instrumentation Engineers (SPIE) Optics and Photonics, Optical Modeling and Performance Predictions X,** paper 107430J, San Diego, CA, Sept. 2018 (SPIE, Bellingham, Wash., 2018).

30. Alan E. Willner. "Career Focus: Taking Control of Your Job Search," **OSA Optics and Photonics News**, April 2018.

31. Minghui Yang, Yuhao Guo, Alan E. Willner, Guifang Li, and Lin Zhang, " Efficient Octave-Spanning Frequency Comb Generation in Normal Dispersion Regime," **Society of Photo-Instrumentation Engineers (SPIE) Optics and Photonics, Nonlinear Frequency Generation and Conversion: Materials and Devices XVII,** paper 10518-72, San Jose, CA, Jan. 2018 (SPIE, Bellingham, Wash., 2018).

32. Jing Wang, Lijuan Xu, Yuhao Guo, Alan E. Willner, Guifang Li, and Lin Zhang, "Agile Generation of Microresonator-based Frequency Combs without Pump Detuning and Local Temperature Controlling," **Society of Photo-Instrumentation Engineers (SPIE) Optics and Photonics, Nonlinear Frequency Generation and Conversion: Materials and Devices XVII,** paper 10518-18, San Jose, CA, Jan. 2018 (SPIE, Bellingham, Wash., 2018).

33. Alan E. Willner, "Editorial: Optics Letters' 40th Anniversary Retrospective 2008–2013," **Optics Letters**, vol. **42**, no. 15, pp. ED5-ED5, 2017.

NON-REFEREED PAPERS: (CONTINUED)

34. Alan E. Willner. "Celebrating a Century of Optics Innovation." **Guest Editorial, Optic & Photonik,** vol. **11**, no. 5, pp. 1-1, Dec. 2016.

35. Bishara Shamee, Morteza Ziyadi, Amirhossein Mohajerin-Ariaei, Ahmed Almaiman, Yinwen Cao, Steven R. Wilkinson and Alan E. Willner, "Modified Raised Cosine Waveform Shaping with Reduced Peak to Average Power Ratio," **Society of Photo-Instrumentation Engineers (SPIE) Optics and Photonics, Laser Communication and Propagation through the Atmosphere and Oceans V, FSO Comms,** paper 9979-15, San Diego, CA, Aug. 2016 (SPIE, Bellingham, Wash., 2016).

36. Bishara Shamee, Morteza Ziyadi, Amirhossein Mohajerin-Ariaei, Ahmed Almaiman, Yinwen Cao, Nisar Ahmed, Steven R. Wilkinson and Alan E. Willner, "Smoothly Clipped Root Raised Cosine Waveforms for an Effective Loading of a Coherent Optical M-QAM Modulator," **Society of Photo-Instrumentation Engineers (SPIE) Photonics West, Advanced Modulation Format and DSP I**, paper 9774-9, San Francisco, CA, Feb. 2016 (SPIE, Bellingham, Wash., 2016).

37. D. Starodubov, K. McCormick, M. Dellosa, L. Volfson, A. Fallahpour and A. Willner, "Precision Optical Navigation Guidance System," **Proc. of Society of Photo-Instrumentation Engineers (SPIE) 9828**, Airborne Intelligence, Surveillance, Reconnaissance (ISR) Systems and Applications XIII, paper. 98280C, Jun. 2016 (SPIE, Bellingham, Wash., 2016).

38. Alan E. Willner, "Public/private Partnerships Drive National Photonics Initiative," **Guest Editorial, Chip Scale Review,** pp. 8, March/April 2016.

39. Asher J. Willner, Yongxiong Ren, Guodong Xie, Zhe Zhao, Yinwen Cao, Long Li, Nisar Ahmed, Zhe Wang, Yan Yan, Peicheng Liao, Cong Liu, Mohammad Mirhosseini, Robert W. Boyd, Moshe Tur, and Alan E. Willner, "Free-space Optical Communications using Encoding of Data on Different Orbital-Angular-Momentum Modes," **Society of Photo-Instrumentation Engineers (SPIE), Free-Space Laser Communication and Atmospheric Propagation XXVIII**, paper 9739-43, San Francisco, CA, Feb. 2016 (SPIE, Bellingham, Wash., 2016).

40. Nisar Ahmed, Zhe Zhao, Yan Yan, Peicheng Liao, Guodong Xie, Zhe Wang, Martin P. J. Lavery, Yongxiong Ren, Ahmed S. Almaiman, Hao Huang, Long Li, Changjing Bao, Nima Ashrafi, Solyman Ashrafi, Moshe Tur, Andreas F. Molisch, and Alan E. Willner, "Demonstration of an Obstruction-Tolerant Millimeter-wave Free-space Communications Link of two 1-Gbaud 16-QAM Channels using Bessel Beams Containing Orbital Angular Momentum," **Society of Photo-Instrumentation Engineers (SPIE), Third International Conference on Optical Angular Momentum**, paper OAM01-68, San Francisco, CA, Aug. 2015 (SPIE, Bellingham, Wash., 2015).

41. Bishara Shamee, Nisar Ahmed, Morteza Ziyadi, Amirhossein Mohajerin-Ariaei, Ahmed S. Almaiman, Yinwen Cao, Steven R. Wilkinson, Alan E. Willner, "OAM based Analog to Digital Converter (ADC)," **Society of Photo-Instrumentation Engineers (SPIE), Third International Conference on Optical Angular Momentum**, paper OAM01-102, San Francisco, CA, Aug. 2015 (SPIE, Bellingham, Wash., 2015).

42. Giovanni Milione, Martin P. J. Lavery, Hao Huang, YongxiongRen, Yan Yan, EbrahimKarimi, Thien An Nguyen, Ming-Jun Li, Dan A. Nolan, Robert R. Alfano, Alan E. Willner, "Mode-division Multiplexing using the Basis of Vector Modes over Free Space and Optical Fibers," **Society of Photo-Instrumentation Engineers (SPIE) Photonics West**, paper 9379-18, San Francisco, CA, Feb. 2015 (SPIE, Bellingham, Wash., 2015).

43. Ahmed Almaiman, Mohamed R. Chitgarha, Wajih A. Daab, Morteza Ziyadi, Amirhossein M. Ariaei, Wendy X. Zhao, Vijay Vusirikala, and Alan E. Willner,"Experimental Validation of a Delay-Line Interferometer Based in-Band OSNR Monitor using a Multivariable Control System," **Society of Photo-Instrumentation Engineers (SPIE) Photonics West**, paper 9007-23, San Francisco, CA, Feb. 2014 (SPIE, Bellingham, Wash., 2014).

NON-REFEREED PAPERS: (CONTINUED)

44. Hao Huang, Yongxiong Ren, Yang Yue, Yan Yan, Nisar Ahmed, Amanda Bozovich, Samuel J. Dolinar, Jr., and Alan E. Willner, "Performance Analysis of Spectrally Efficient Free-Space Data Link using Spatially Multiplexed Orbital Angular Momentum Beams," **Society of Photo-Instrumentation Engineers (SPIE) Photonics West,** paper 8647-6, San Francisco, CA,Feb. 2013 (SPIE, Bellingham, Wash., 2013).

45. Wajih A. Daab, Salman Khaleghi, Mohamed R. Chitgarha, Morteza Ziyadi, and Alan E. Willner, "Simulation and Experimental Validation of OSNR Monitoring for Different Modulation Formats using Delay-Line-Interferometer," **Society of Photo-Instrumentation Engineers (SPIE) Photonics West,** paper 8646-25, San Francisco, CA, Feb. 2013 (SPIE, Bellingham, Wash., 2013).

46. James E. Ferrara, Jr., Weijian Yang, Anthony Yeh, Karen Grutter, Christopher Chase, Vadim Karagodsky, Devang Parekh, Yang Yue, Alan E. Willner, Ming C. Wu, and Connie Chang-Hasnain, "Low-Loss Hollow-Core Waveguide using High-Contrast Sub-wavelength Grating," **Society of Photo-Instrumentation Engineers (SPIE) Photonics West,** paper 8270-17, San Francisco, CA,Jan. 2012 (SPIE, Bellingham, Wash., 2012).

47. Kevin M. Birnbaum, Baris I. Erkmen, JNisar Ahmed, Irfan M. Fazal, Jian Wang, Jeng-Yuan Yang, Yan Yang, Bishara Shamee, Alan E. Willner, and Samuel J. Dolinar, Jr., "Efficient Multiplexing and Demultiplexing of Orbital Angular Momentum Beams," **Society of Photo-Instrumentation Engineers (SPIE) Photonics West,** paper 8282-6, San Francisco, CA,Jan. 2012 (SPIE, Bellingham, Wash., 2012).

48. Alan E. Willner, "RMO Etchings: How Integrated Optical Components Enhance Optical Communication Systems,"**Columbia University Symposium on Pure and Applied Science: Honoring 40 Years of Contributions by Richard M. Osgood, Jr.,** Jan. 2009.

49. Lin Zhang, J.-Y. Yang, M. Song, R.G. Beausoleil, and Alan Willner, "Advanced Modulation Formats in On-Chip Photonic Interconnects," **HP Photonic Interconnect Forum**, Hewlett-Packard Laboratories, Poster Presentation, Palo Alto, CA, May 2008.

50. "Celebrating 25 Years of the IEEE/OSA Journal of Lightwave Technology": R.C. Alferness, C.J. Chang-Hasnain, T. Giallorenzi, D. Keck, and A.E. Willner, **IEEE/OSA Journal of Lightwave Technology**, vol. **26**, pp. 990-993, 2008; A.E. Willner and C.J. Chang-Hasnain, **IEEE Communications Magazine**, vol. **46**, no. 4, pp. 16-18, 2008;**IEEE Instrumentation & Measurement Magazine**, vol. **11**, no. 3, pp. 49-50, 2008.

51. Y.K. Lize, L. Christen, X. Wu, J-Y Yang, S. Nuccio, A. E. Willner, and R. Kashyap, "Partial Bit Delay Differential Phase Shift Keyed Demodulation," **Society of Photo-Instrumentation Engineers (SPIE) Photonics North 2007**, paper 95-Q4Cq-262, Ottawa, Canada (SPIE, Bellingham, WA, 2007).

52. Y.K. Lize, M. Faucher, E. Jarry, P. Ouellette, A. Wetter, R. Kashyap, and A.E. Willner, "All-Fiber DPSK and DQPSK Demodulator with 180 nm of Spectral Bandwidth," **Society of Photo-Instrumentation Engineers (SPIE) Photonics North 2007**, paper 95-p1jj-262, Ottawa, Canada (SPIE, Bellingham, WA, 2007).

53. Y.K. Lize, L. Christen, S. Nuccio, J.-Y. Yang, A.E. Willner, and R. Kashyap, "Optical Error Correction Device for Differential Modulation Formats Demodulation," **Society of Photo-Instrumentation Engineers (SPIE) Photonics North 2007**, paper 95- DkKX-262, Ottawa, Canada (SPIE, Bellingham, WA, 2007).

54. Y.K. Lize, L.C. Christen, S. Nuccio, A.E. Willner, and R. Kashyap, "Improving Bit Error Rate Through Multipath Differential Demodulation," **Society of Photo-Instrumentation Engineers (SPIE) Photonics West, Symposium on Free-Space Laser Communication Technologies XIX,** paper 6457A-14, San Jose, CA, Jan. 2007 (SPIE, Bellingham, Wash., 2007).

55. Yannick Keith Lize, Louis Christen, Robert Gomma, Scott Nuccio, Alan E. Willner, and Raman Kashyap, "Multi-Bit Differential Phase Shift Keyed Optical Demodulation," **Society of Photo-Instrumentation**

NON-REFEREED PAPERS: (CONTINUED)

Engineers (SPIE) Photonics North 2006, paper 71-HsLe-53, June 2006, Quebec City, Canada(SPIE, Bellingham, Wash., 2006).

56. L.-S. Yan, X. Steve Yao, and A.E. Willner, "Programmable Differential-Group-Delay (DGD) Elements Based Polarization-Mode-Dispersion (PMD) Emulator with Tunable Statistics," **Newsletter of the IEEE Lasers and Electro-Optics Society**, University Research Highlights, vol. **19**, pp. 4-9, Dec. 2005 (IEEE/LEOS, Piscataway, New Jersey, 2005).

57. A.E. Willner, "All-Optical Processing for Efficient Data-Packet Routing in a Secure Optical Network," **Workshop on Optical and Protocol Vulnerability Assessment,** Sponsored by the Defense Information Systems Agency, the National Security Agency, and the Naval Research Laboratory, McLean, VA, June 2001.

58. A.E. Willner and E. Park, "WDM for the Evolving Optical Access Network," **Fiberoptic Product News Magazine**, March 2001.

59. J. Bannister, J. Touch, A.E. Willner, and S. Suryaputra, "How Many Wavelengths Do We Really Need? A Study of the Performance Limits of Packet over Wavelengths," **Optical Networks Magazine**, vol. **1**, April, pp. 11-22, 2000.

60. J. Yoo, J. Leight, and A.E. Willner, "Power and Crosstalk Limitations in 2-D Multiple-Plane WDM Interconnections," **Society of Photo-Instrumentation Engineers (SPIE) Photonics East Conference on Emerging Components and Technologies for All-Optical Photonic Systems,** Technical Digest, Nov., 1996, Boston, MA (SPIE, Bellingham, Wash., 1996).

61. J.E. Leight, S. Homan, A.E. Willner, G. Giaretta, M. Li, and C.J. Chang-Hasnain, "Demonstration of a Reconfigurable Wavelength-Multiplexed Multiple-Plane Optical Interconnection," **Society of Photo-Instrumentation Engineers (SPIE) Photonics East Conference on Emerging Technologies for All-Optical Networks,** Technical Digest, paper 2613-11, Oct., 1995, Philadelphia, PA (SPIE, Bellingham, Wash., 1995).

62. W. Shieh and A.E. Willner, "Optimal Conditions for All-Optical SOA-Based High-Speed Wavelength Shifting," **Society of Photo-Instrumentation Engineers (SPIE) Photonics West Conference on Components for Wavelength Division Multiplexing**, Technical Digest, paper 2402-14, Feb., 1995, San Jose, CA (SPIE, Bellingham, Wash., 1995).

63. A.E. Willner, C.J. Chang-Hasnain, and J.E. Leight, "2-D WDM Optical Interconnects using Multiple-Wavelength VCSEL's for Simultaneous and Reconfigurable Communication Between Many Planes," **Optics and Photonics News**, vol. **4**, no. 12, pp. 20-21, 1993.

64. A.E. Willner and S.-M. Hwang, "SNR Equalization of 20 WDM Channels Propagating Through a Cascade of EDFA's," **AnnualMeeting of the Optical Society of America**, Technical Digest, paper MFF4, Oct. 1993 (Optical Society of America, Wash., D.C., 1993).

65. A.E. Willner, "Book Review of Fiber-Optic Communication Systems authored by G.P. Agrawal," **IEEE Journal of Quantum Electronics**, vol. **30**, p. 347, 1994.

66. A.E. Willner, M. Kuznetsov, I.P. Kaminow, U. Koren, T.L. Koch, C.A. Burrus, and G. Raybon, "Multi-Gigahertz Bandwidth FM Response of Two-Electrode DFB Lasers," **Annual Meeting of the Optical Society of America**, Technical Digest, paper TuP3, Oct. 1989 (Optical Society of America, Wash., D.C., 1989).

67. M.N. Ruberto, R. Scarmozzino, A.E. Willner, D.V. Podlesnik and R.M. Osgood, Jr., "Graded-Effective-Index Waveguiding Structures Fabricated with Laser Processing", **Society of Photo-Optical Instrumentation Engineers (SPIE)**, Proceedings, vol. **1215**, pp. 538-549, Anaheim, CA, Jan. 1990 (SPIE, Bellingham, Wash., 1990).

NON-REFEREED PAPERS: (CONTINUED)

68. A.E. Willner, O.J. Glembocki, D.V. Podlesnik, E.D. Palik, and R.M. Osgood, Jr., "Surface Potential Characterization of the Photoelectrochemical Etching System by Photoreflectance and Electroreflectance Techniques," **Society of Photo-Optical Instrumentation Engineers (SPIE)**, vol. **946**, pp. 48-56 (SPIE, Bellingham, Wash., 1988).

TECHNICAL REPORTS:

1. A.E. Willner, "Electrical Fields and Capacitances of Submicron Devices in Silicon and GaAs,"Technical Report, **David Sarnoff Research Center**, RCA Laboratories, Summer 1984.
2. A.E. Willner, "Automatic Data Acquisition of Resistance and Capacitance on a Processed Semiconductor Wafer," Technical Report, **David Sarnoff Research Center**, RCA Laboratories, Summer 1983.