US 20060253201A1

(19) United States

(12) Patent Application Publication

McLuen

(10) Pub. No.: US 2006/0253201 A1

(43) Pub. Date: Nov. 9, 2006

(54) **BONE FUSION DEVICE**

(75) Inventor: **Gary R. McLuen**, Port Townsend, WA (US)

Correspondence Address:
HAVERSTOCK & OWENS LLP
162 NORTH WOLFE ROAD
SUNNYVALE, CA 94086 (US)

(73) Assignee: **McLuen Design, Inc.**

(21) Appl. No.: **11/484,379**

(22) Filed: **Jul. 10, 2006**

Related U.S. Application Data

(63) Continuation-in-part of application No. 11/357,319, filed on Feb. 16, 2006, which is a continuation-in-part of application No. 11/264,958, filed on Nov. 1, 2005.

(60) Provisional application No. 60/624,836, filed on Nov. 3, 2004.

Publication Classification

(51) **Int. Cl.**
A61F 2/44 (2006.01)

(52) **U.S. Cl.** **623/17.15**; 623/17.11

(57) **ABSTRACT**

A bone fusion device provides stability to bones during a bone fusion period. The bones include, for example, the vertebrae of a spinal column. The bone fusion device comprises one or more extendable tabs attached to the bone fusion device by associated rotating means. The bone fusion device is preferably inserted by using an arthroscopic surgical procedure. During arthroscopic insertion of the device, the tabs are pre-configured for compactness. In this compact configuration, the tabs are preferably deposed along and/or within an exterior surface of the bone fusion device. After the bone fusion device has been positioned between the bones, one or more tab(s) are extended. In the preferred embodiment, the position of each tab is related to a positioning element and extending blocks. Typically, the tabs advantageously position and brace the bone fusion device in the confined space between the bones until the bones have fused.

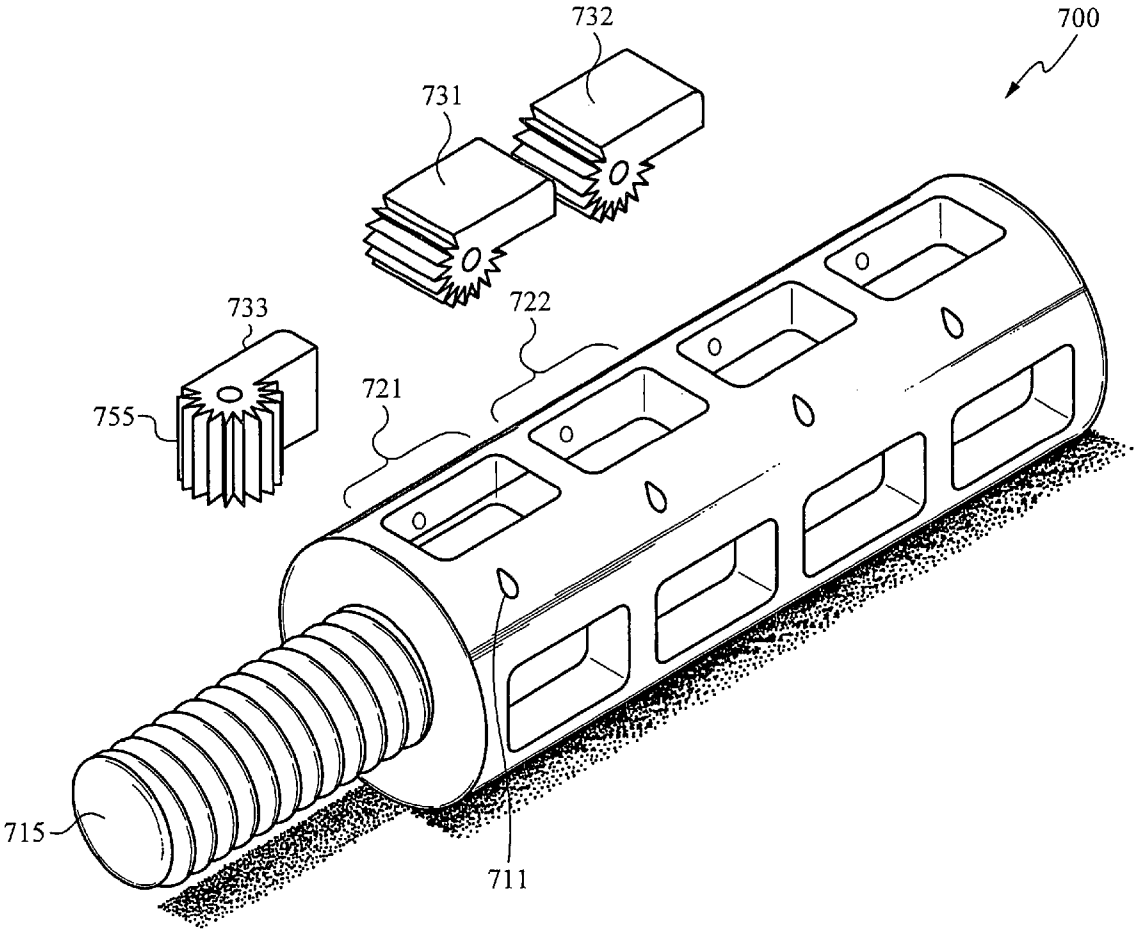

MEDTRONIC EXHIBIT 1012

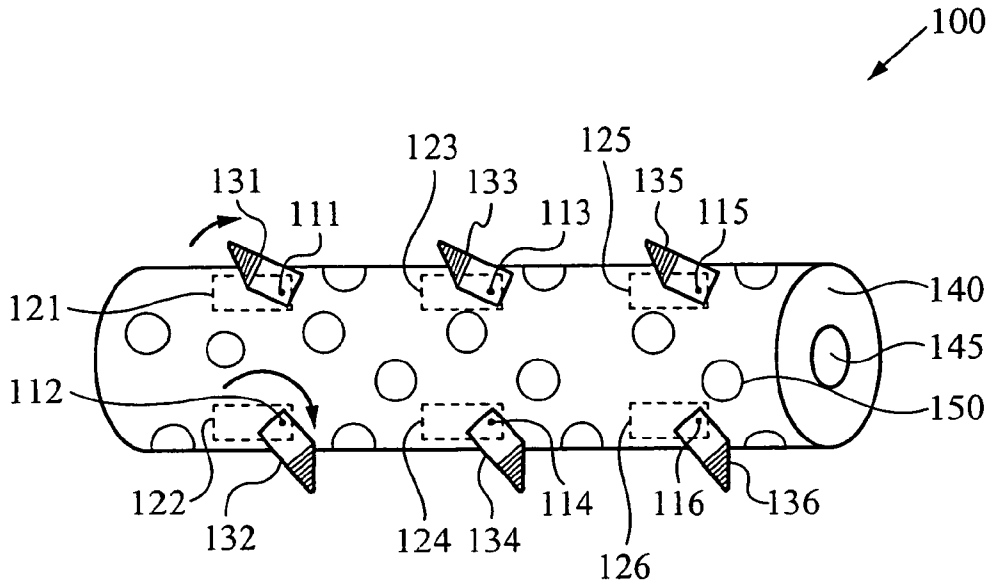
100
123
125
131
133
135
111
113
115
121
140
145
112
150
122
132
124
134
114
116
136
126

Fig. 1

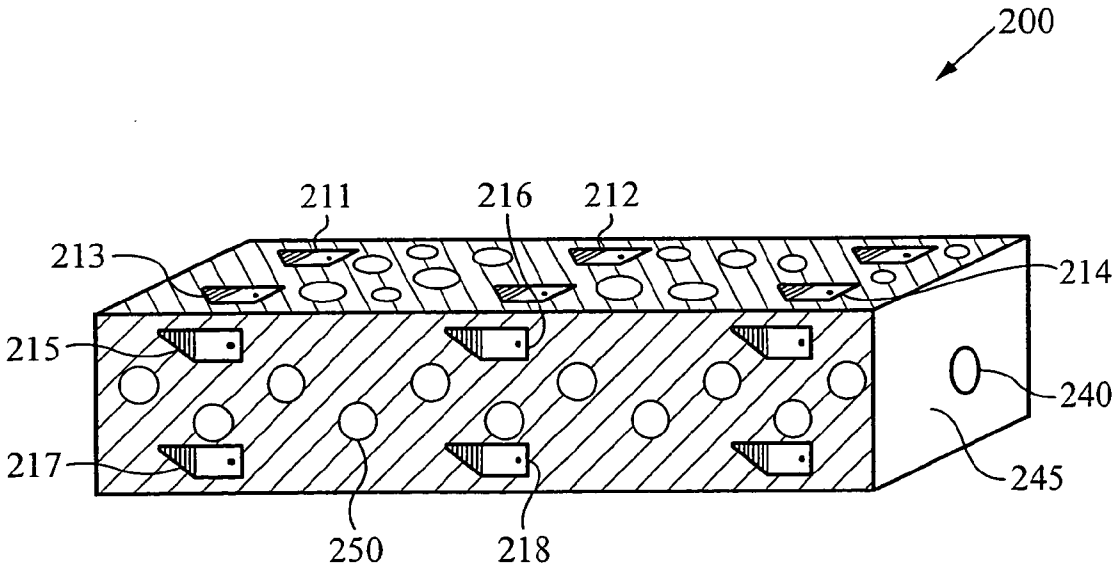
200
211
216
212
213
214
215
240
217
245
250
218

Fig. 2

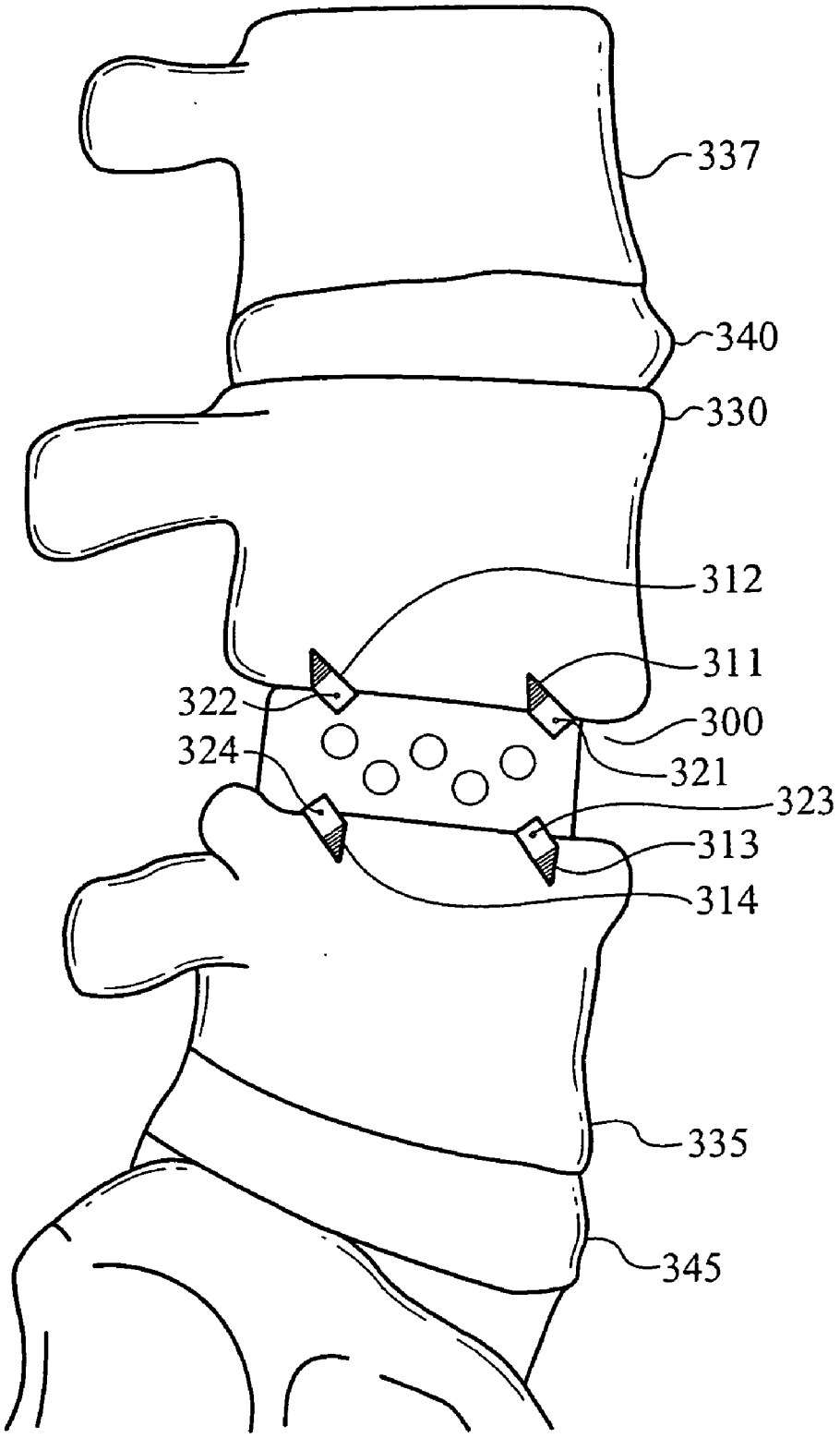

Fig. 3A

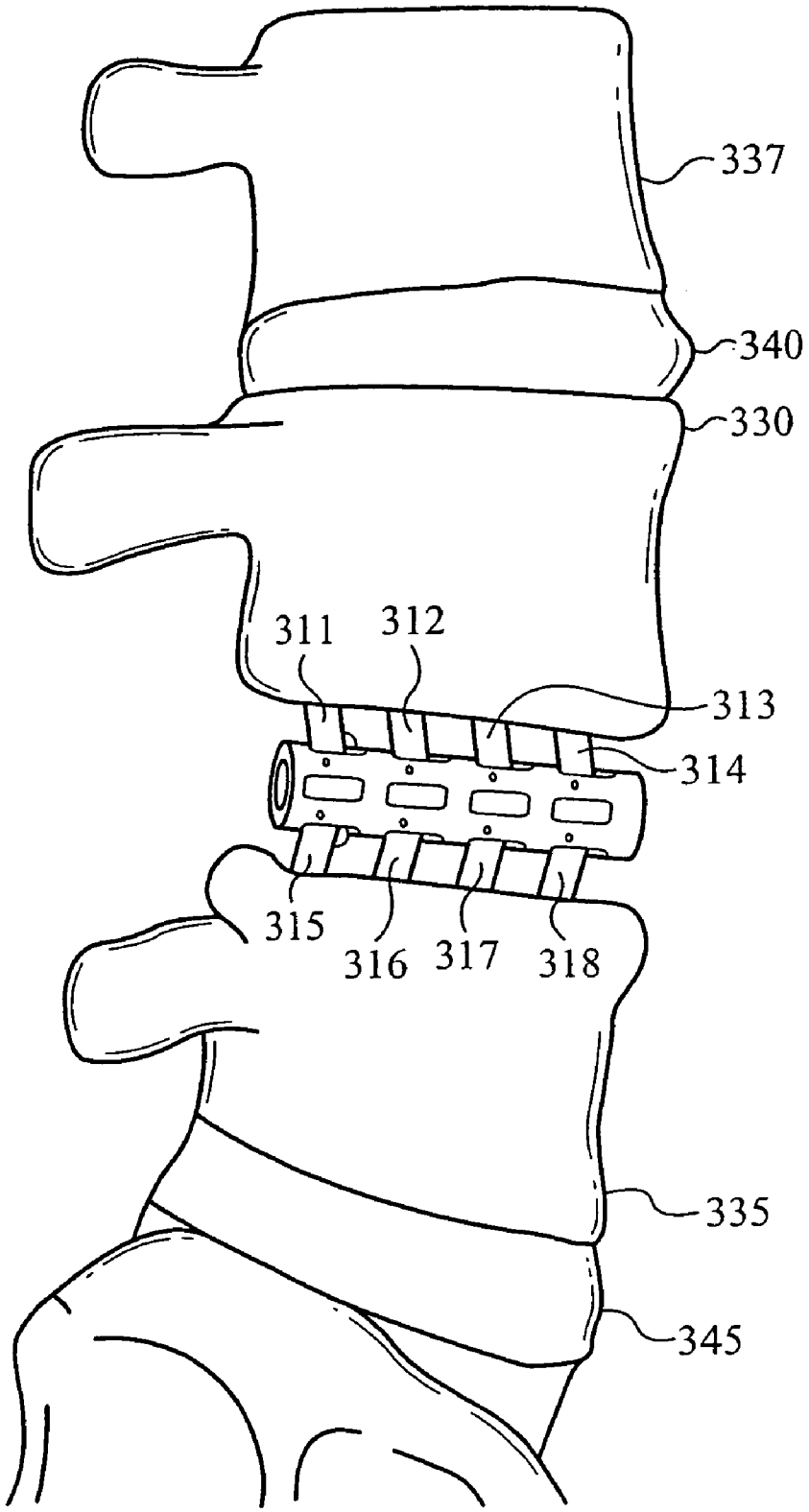

Fig. 3B

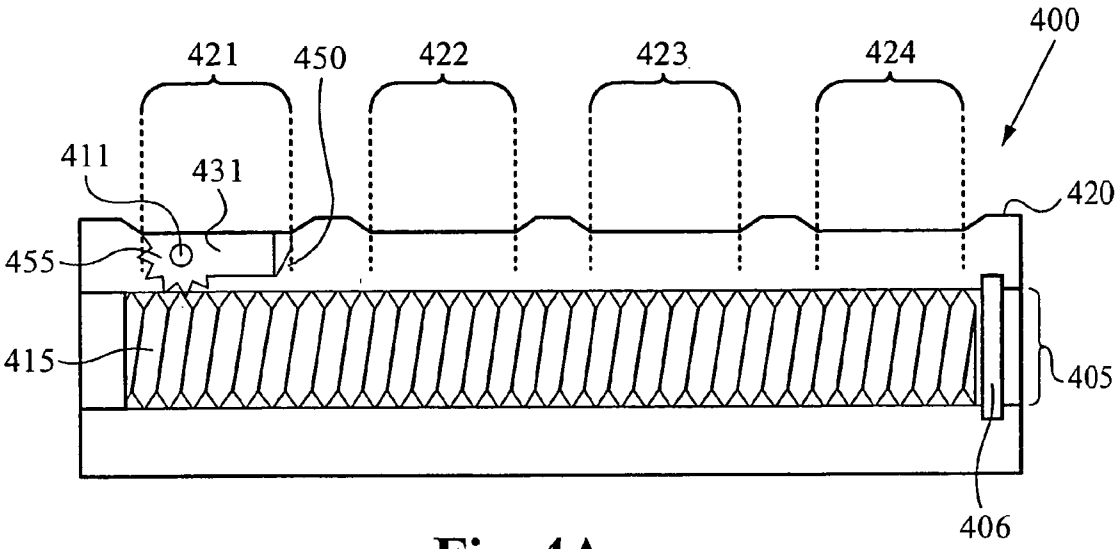
400
421
450
422
423
424
411
431
420
455
415
405
406

Fig. 4A

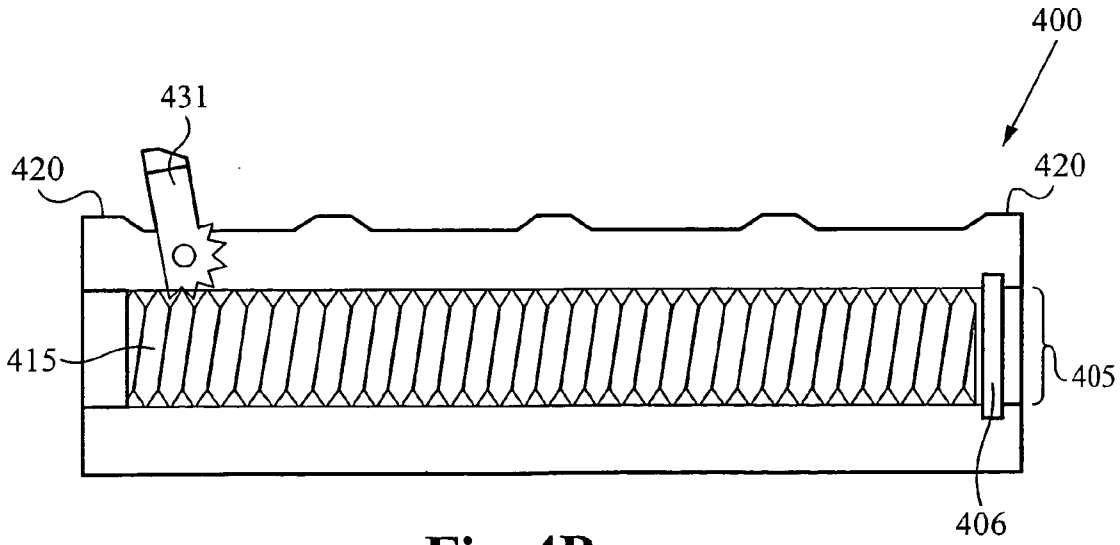
400
431
420
420
415
405
406

Fig. 4B

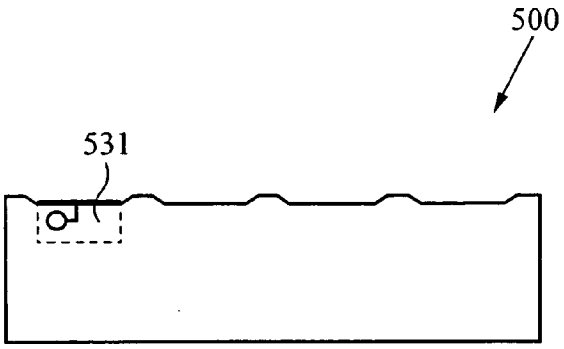

Fig. 5A

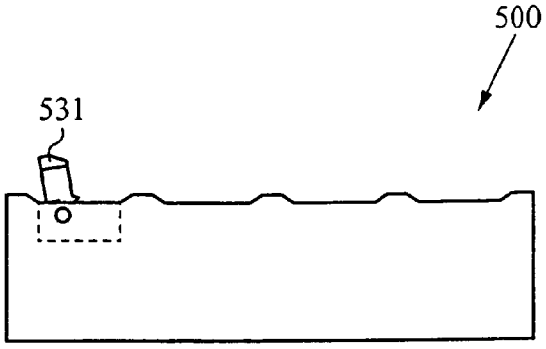

Fig. 5B

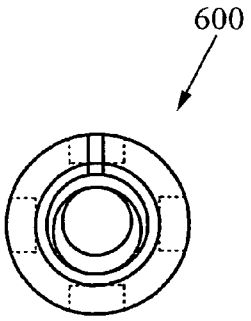

Fig. 6A

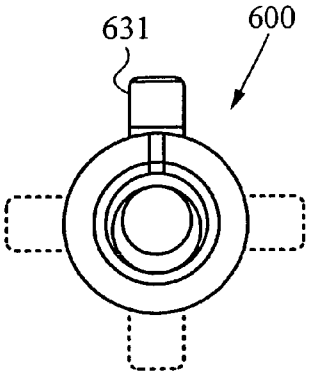

Fig. 6B

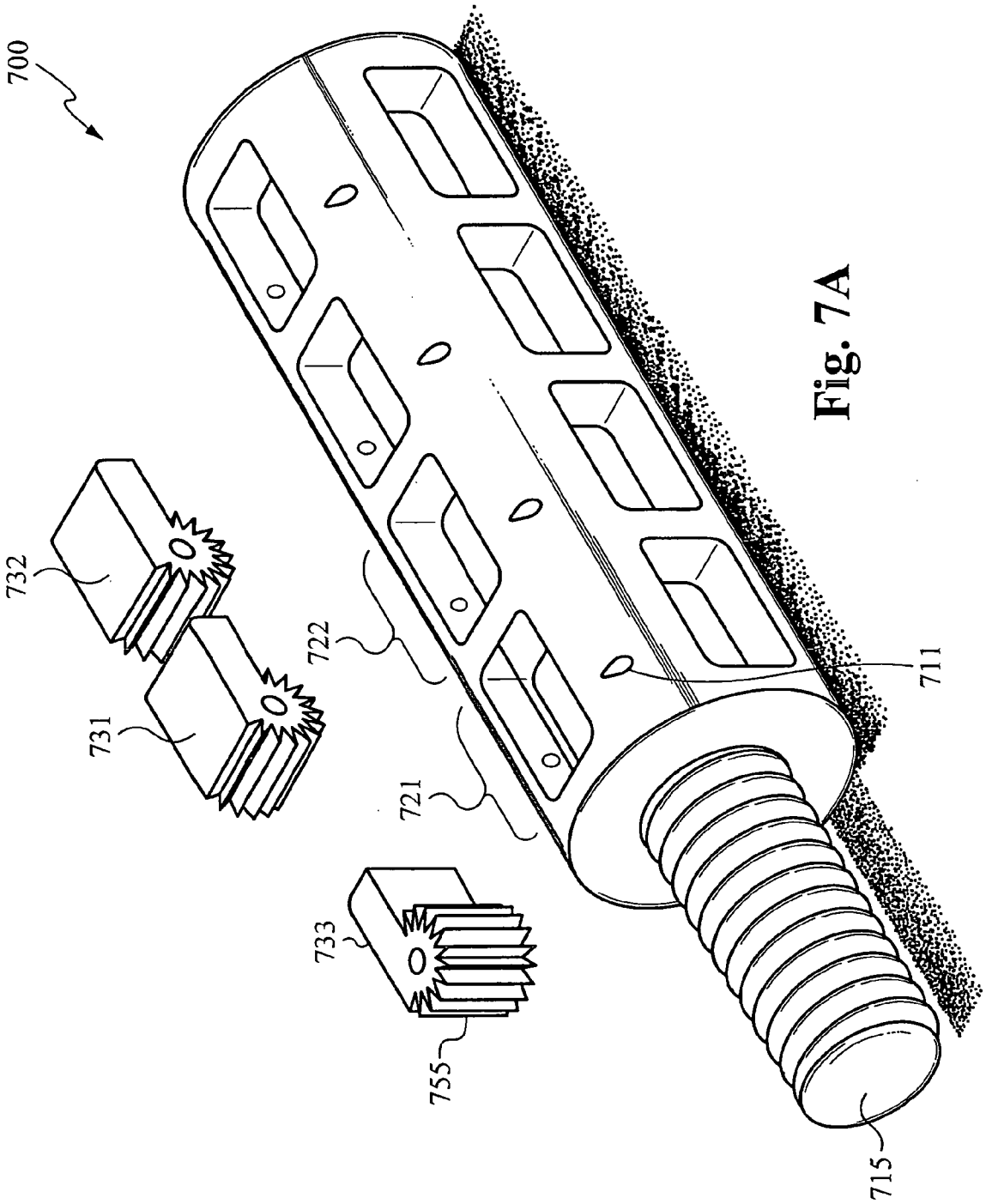

Fig. 7A

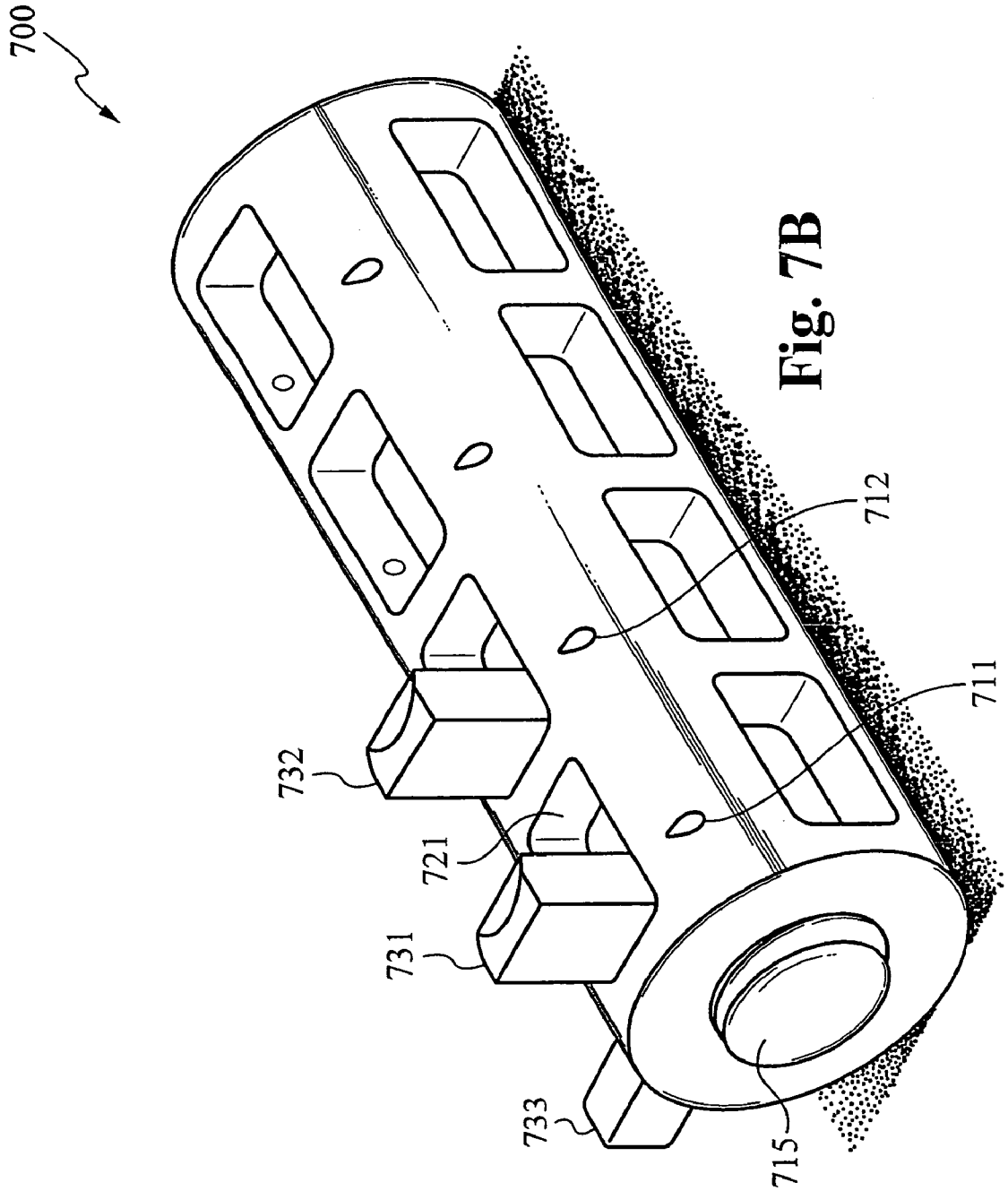

Fig. 7B

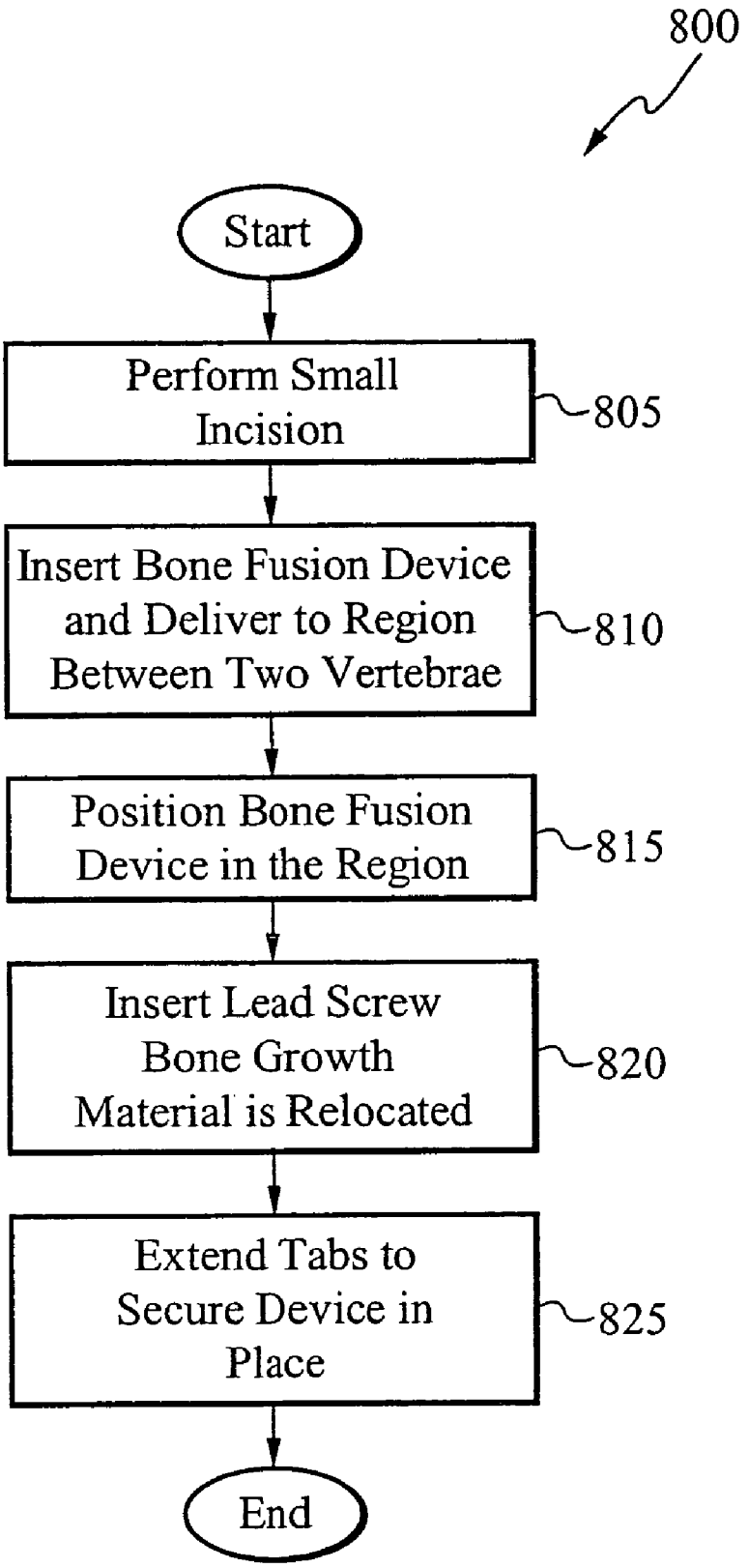
800
Start
Perform Small Incision
805
Insert Bone Fusion Device and Deliver to Region Between Two Vertebrae
810
Position Bone Fusion Device in the Region
815
Insert Lead Screw Bone Growth Material is Relocated
820
Extend Tabs to Secure Device in Place
825
End

Fig. 8

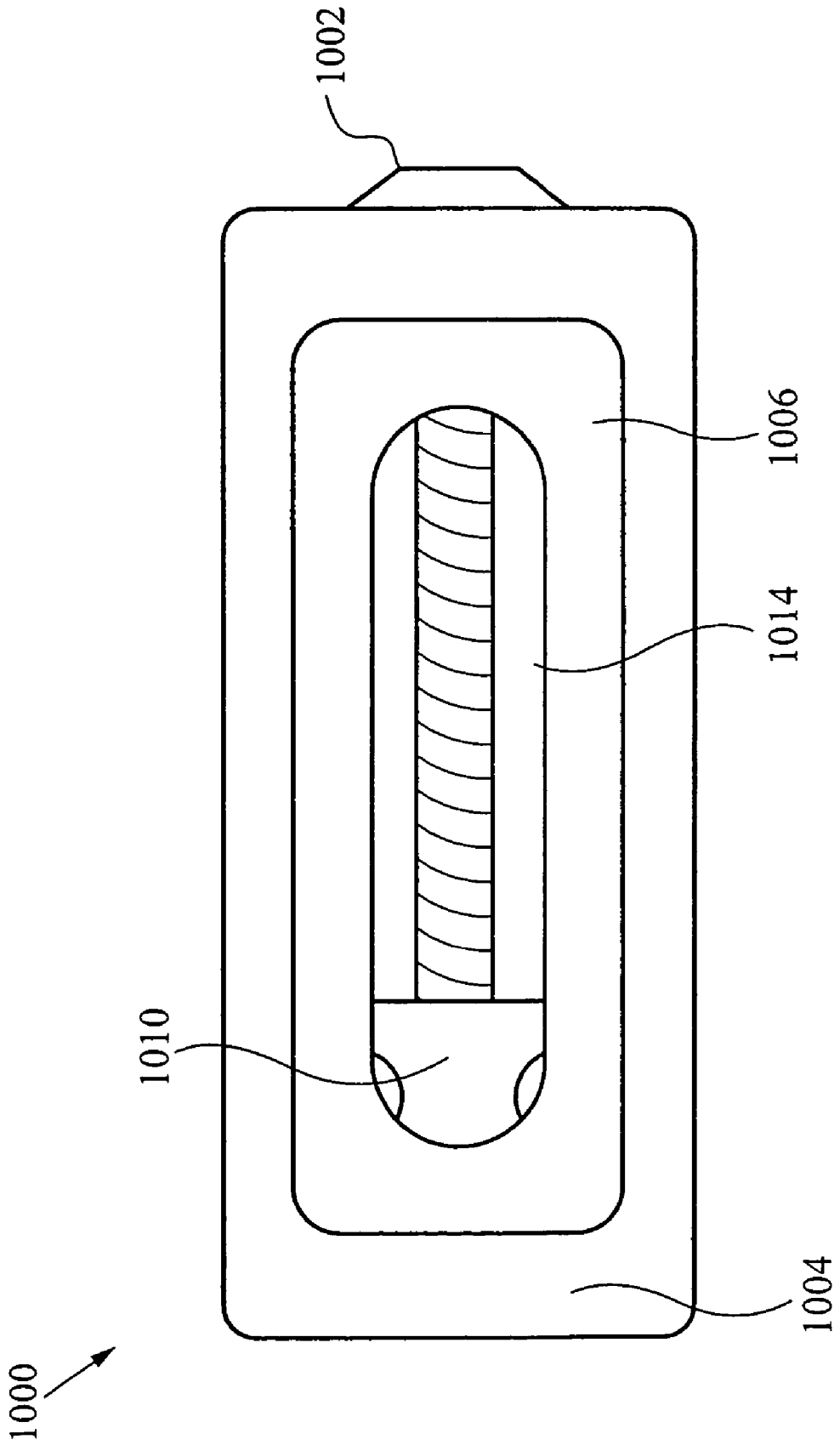

Fig. 9

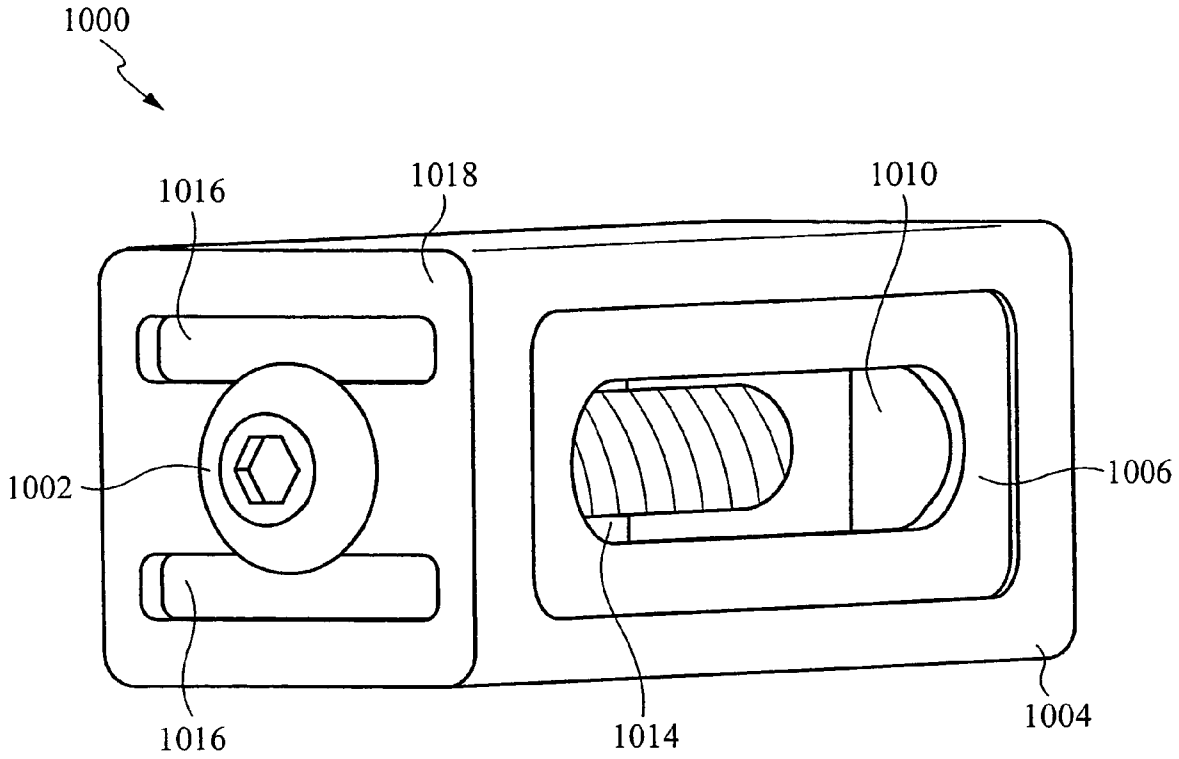

Fig. 10

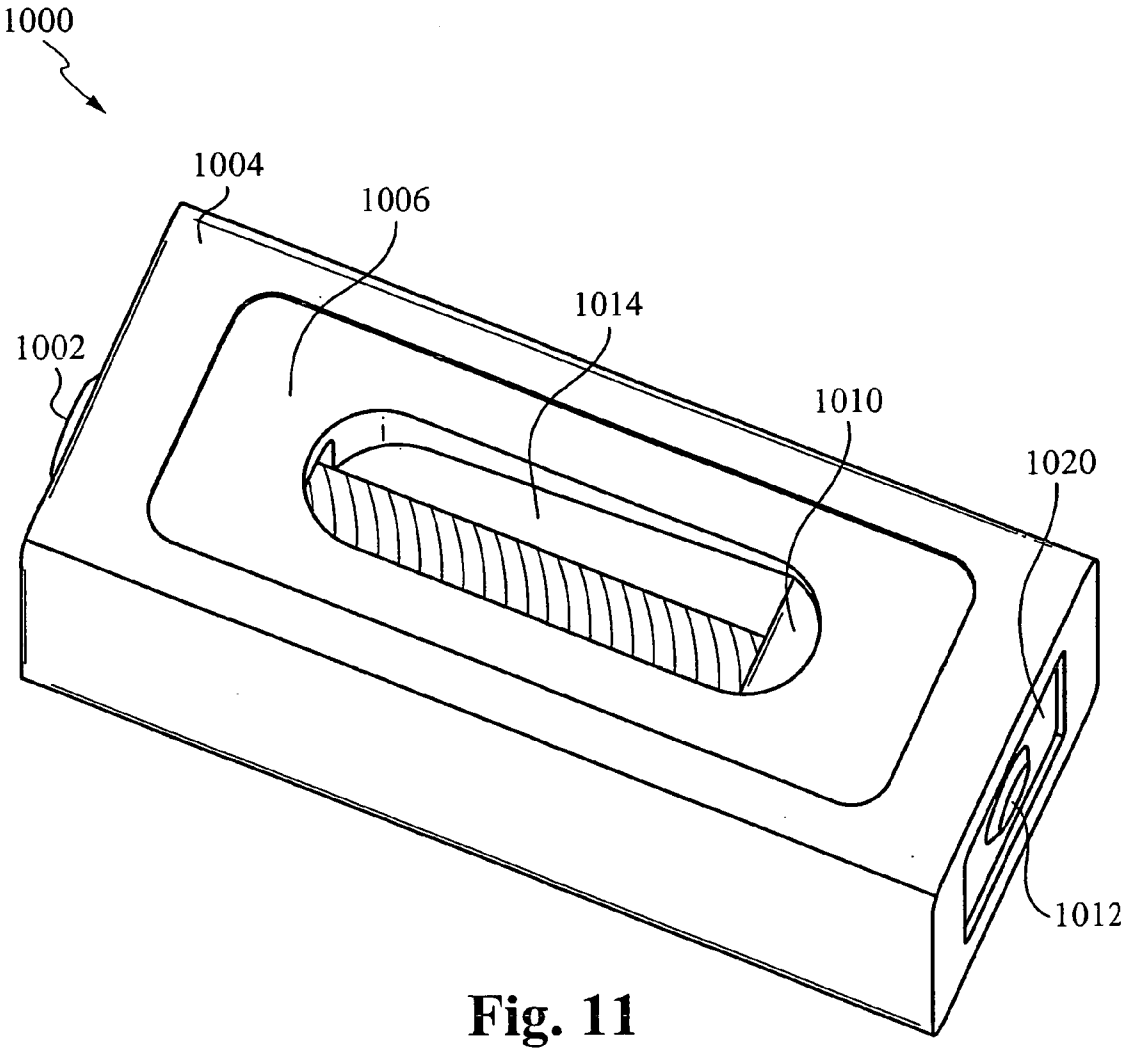

Fig. 11

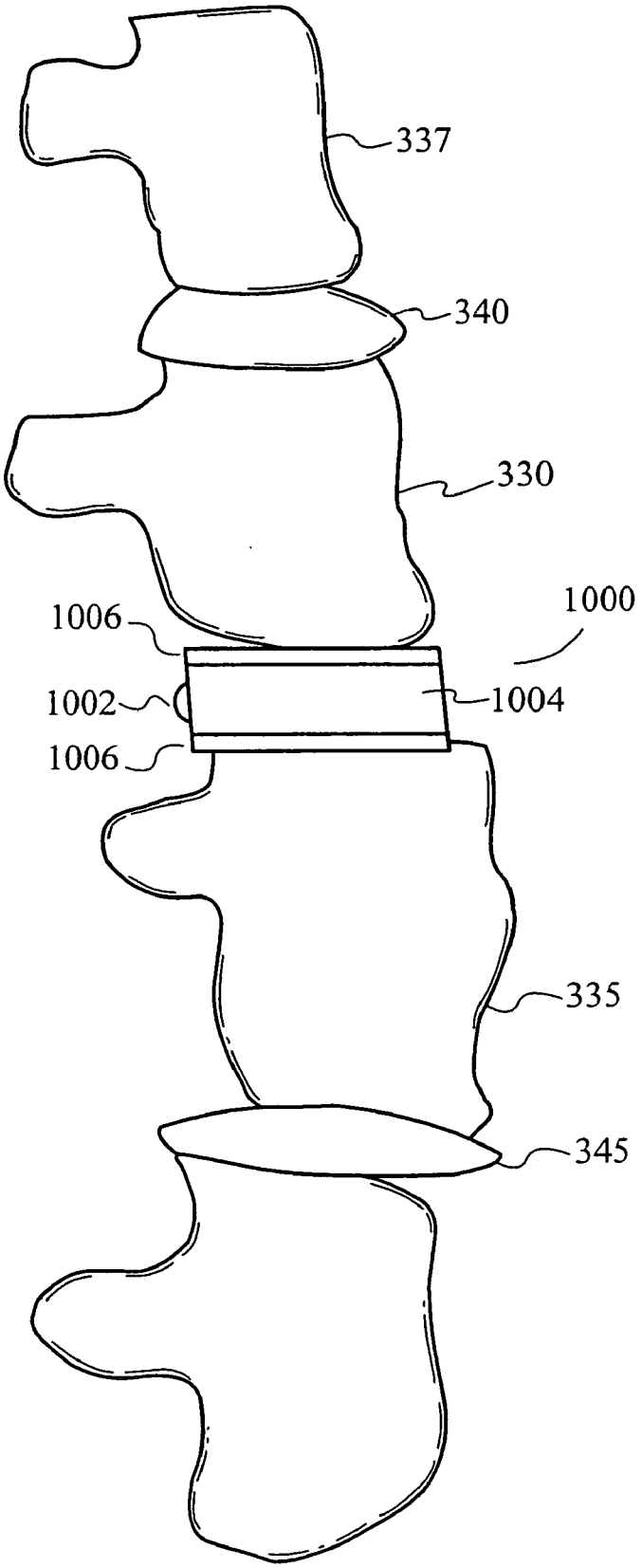

Fig. 12

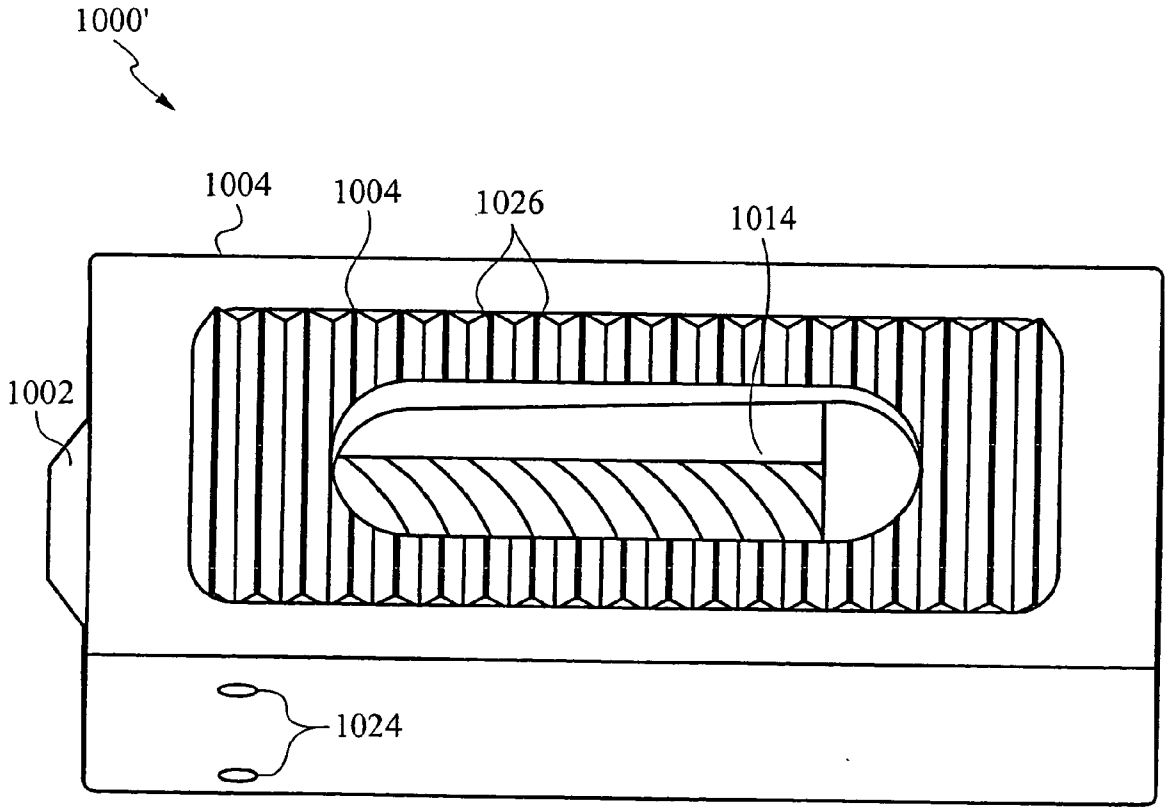

Fig. 13

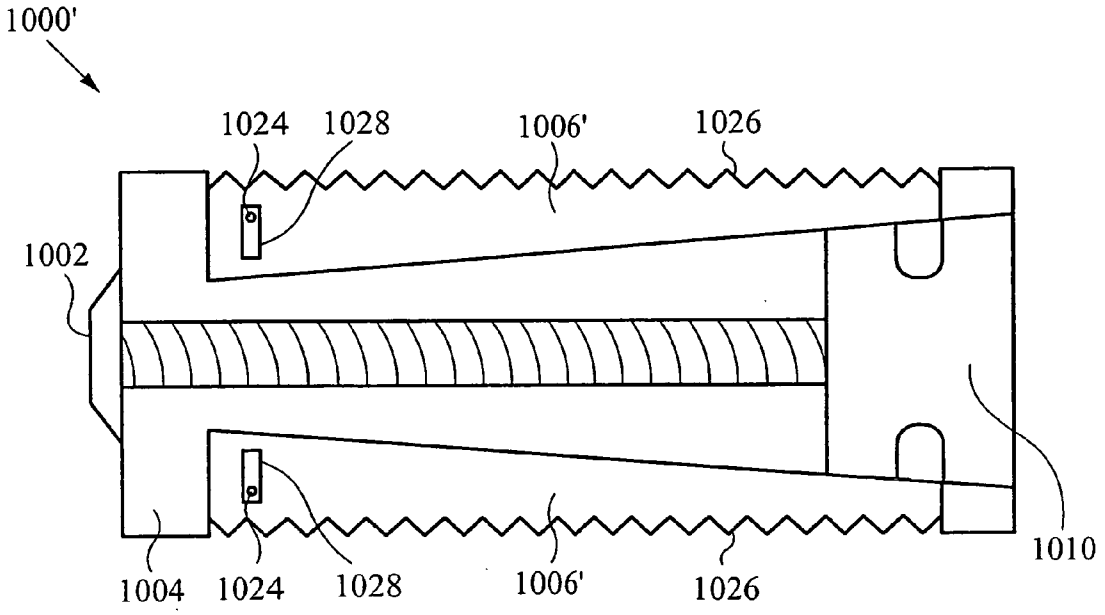

Fig. 14A

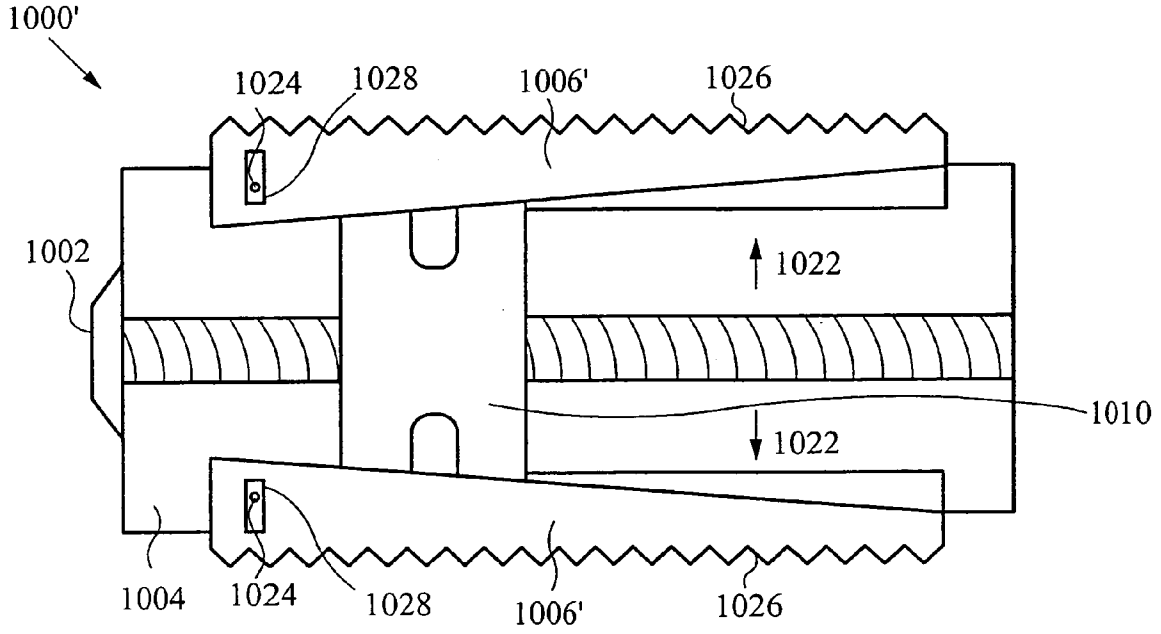

Fig. 14B

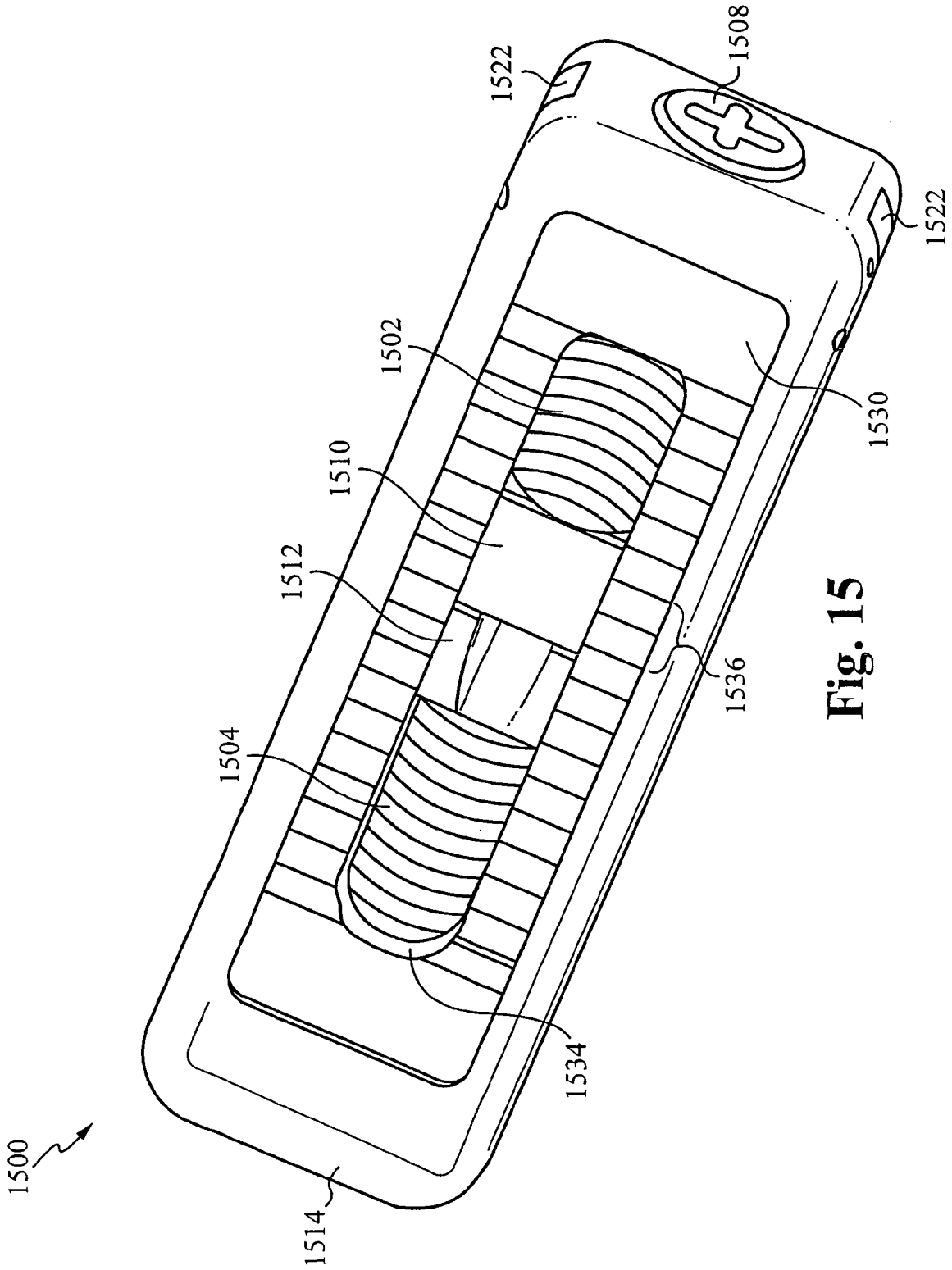

Fig. 15

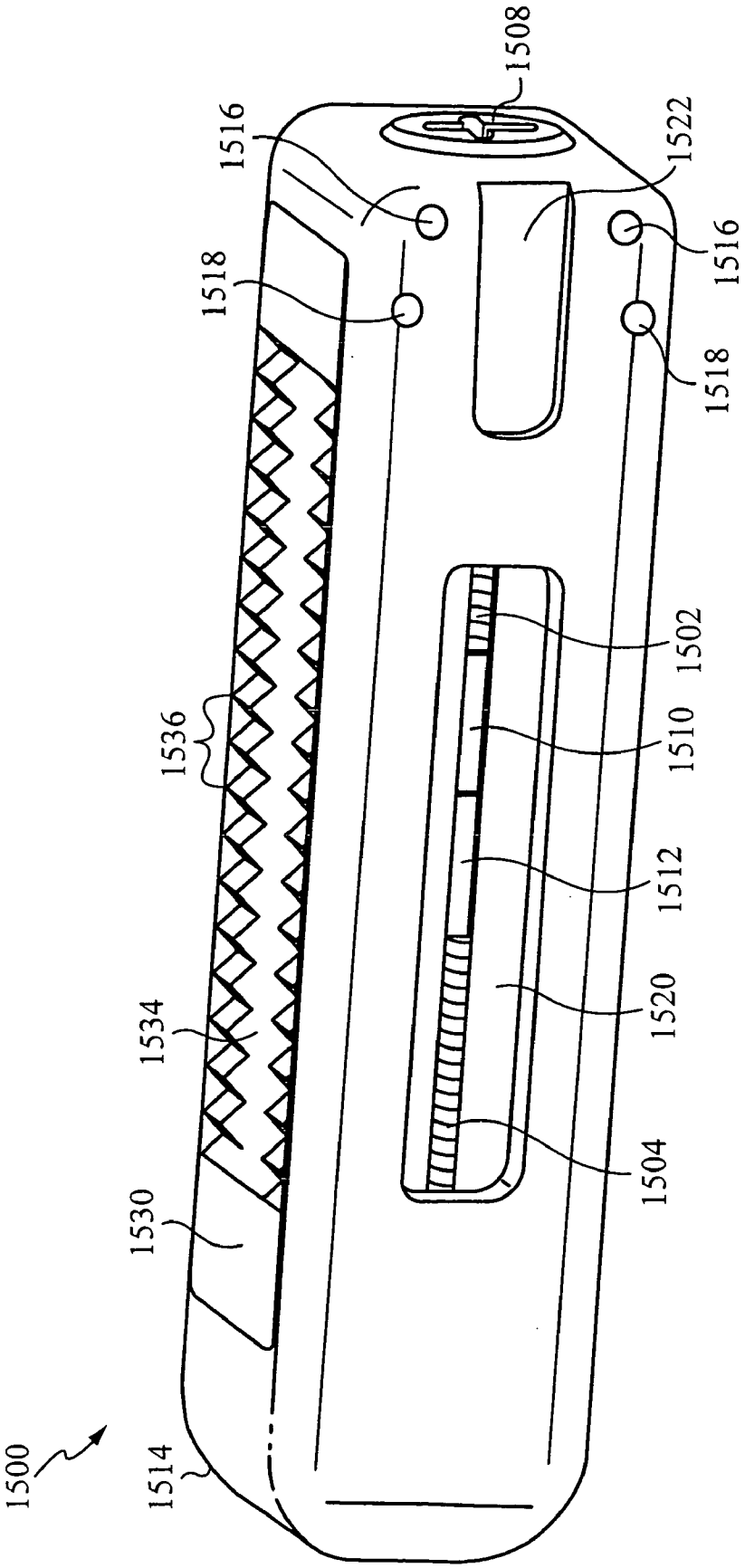
1500
1514
1530
1534
1536
1518
1516
1508
1522
1516
1518
1502
1510
1512
1520
1504

Fig. 16

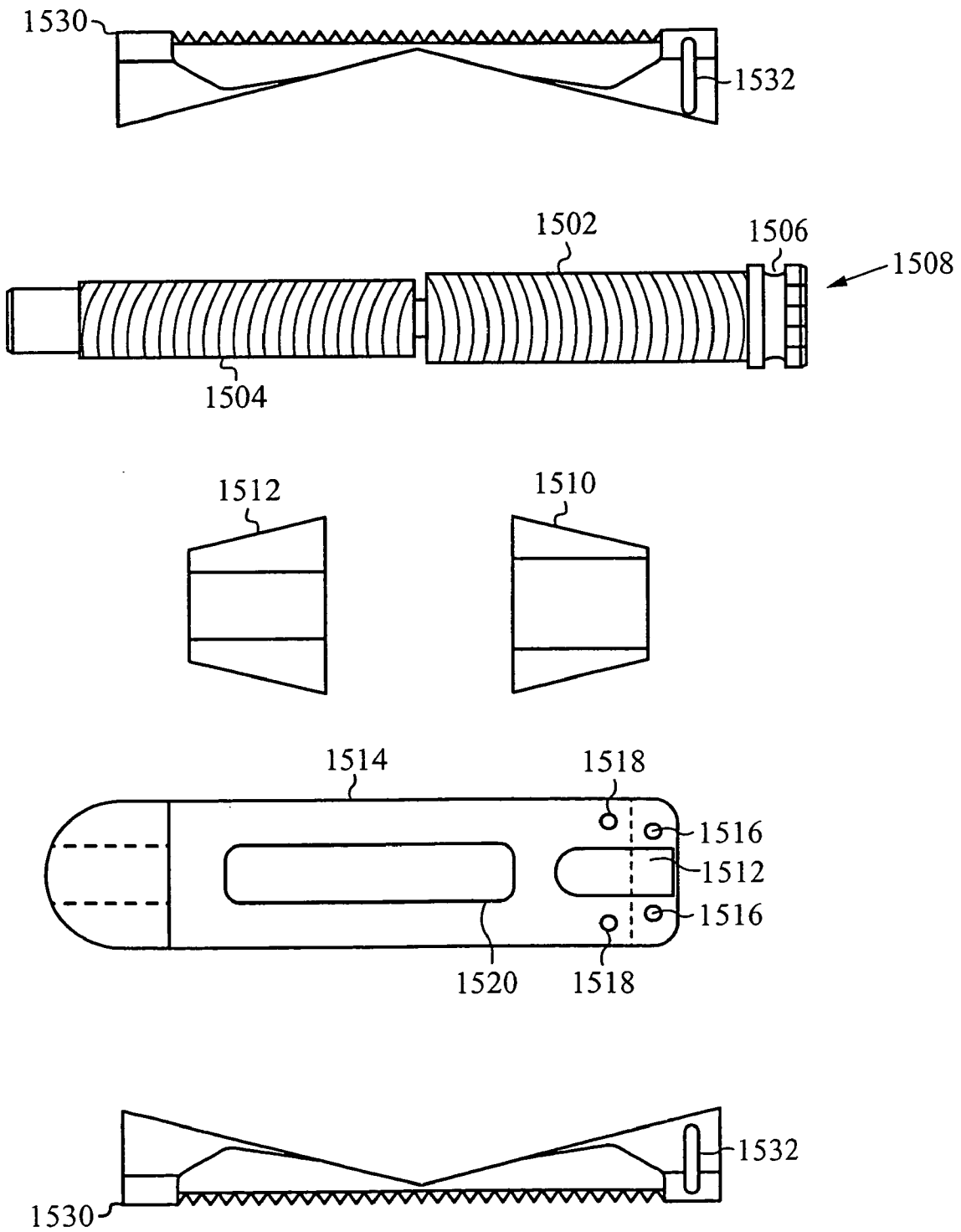
1530
1532
1502
1506
1508
1504
1512
1510
1514
1518
1516
1512
1516
1520
1518
1532
1530

Fig. 17

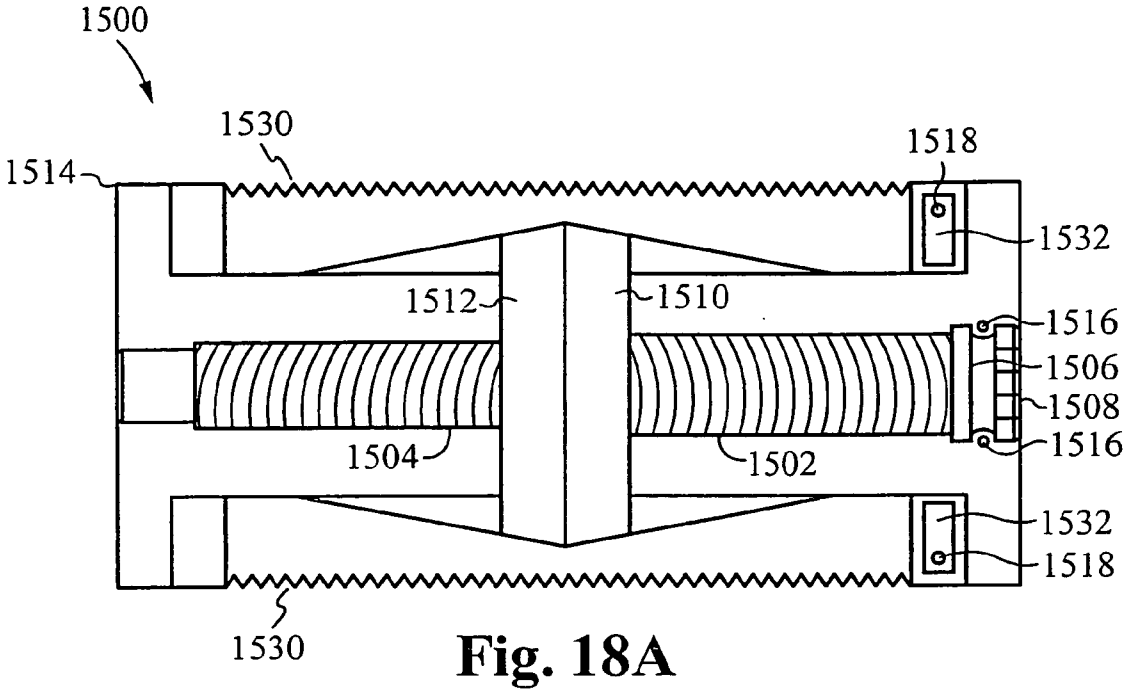

Fig. 18A

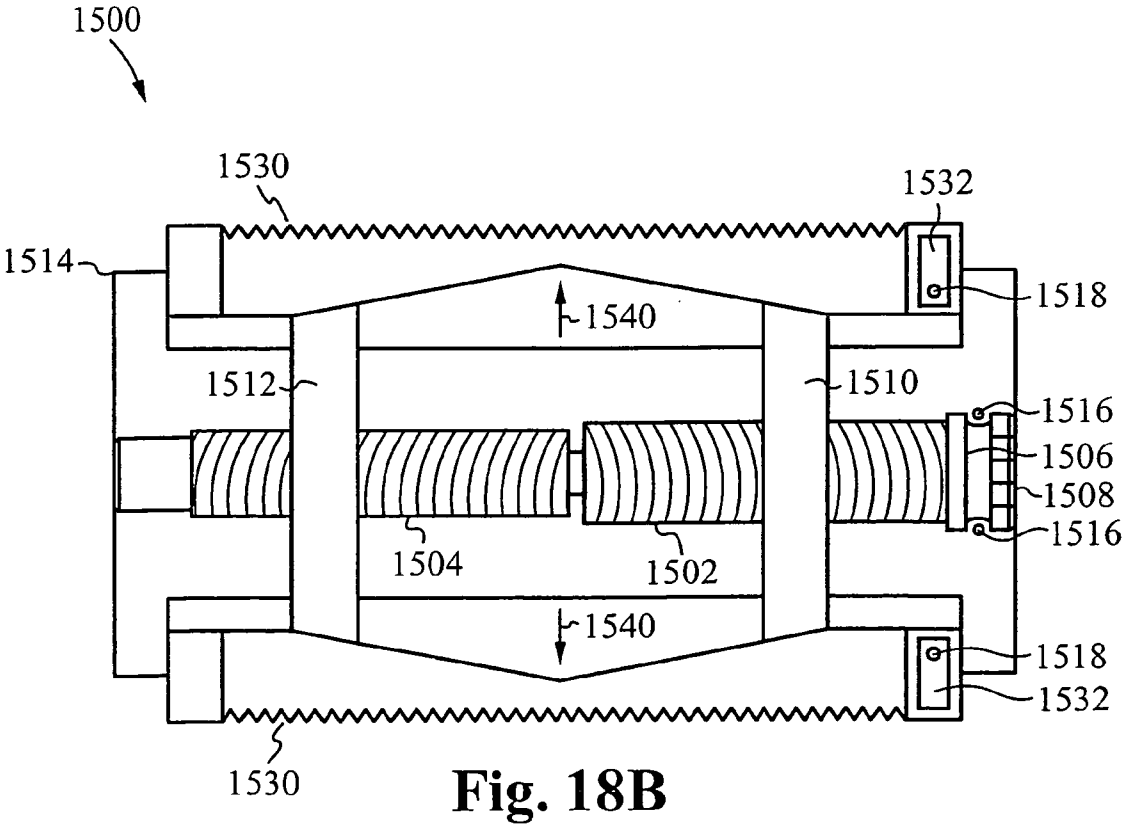

Fig. 18B

BONE FUSION DEVICE

RELATED APPLICATIONS

[0001] This application is a continuation-in-part of co-pending U.S. patent application Ser. No. 11/357,319, filed on Feb. 16, 2006 and entitled "BONE FUSION DEVICE" which is hereby incorporated by reference, and which is a continuation-in-part of co-pending U.S. patent application Ser. No. 11/264,958, filed on Nov. 1, 2005 and entitled "BONE FUSION DEVICE" which is hereby incorporated by reference, and which claims priority under 35 U.S.C. § 119(e) of the co-pending U.S. Provisional Patent Application Ser. No. 60/624, 836, filed Nov. 3, 2004, and entitled "BONE FUSION DEVICE" which is hereby incorporated by reference.

FIELD OF THE INVENTION

[0002] This invention relates generally to bone fusion devices. More specifically, the present invention relates to devices for fusing vertebrae of the spine that can be inserted arthroscopically.

BACKGROUND OF THE INVENTION

[0003] The spinal column is made up of vertebrae stacked on top of one another. Between the vertebrae are discs which are gel-like cushions that act as shock-absorbers and keep the spine flexible. Injury, disease, or excessive pressure on the discs can cause degenerative disc disease or other disorders where the disc becomes thinner and allows the vertebrae to move closer together or become misaligned. As a result, nerves may become pinched, causing pain that radiates into other parts of the body, or instability of the vertebrae may ensue.

[0004] One method for correcting disc-related disorders is to insert a fusion cage between the vertebrae to act as a structural replacement for the deteriorated disc. The fusion cage is typically a hollow metal device usually made of titanium. Once inserted, the fusion cage maintains the proper separation between the vertebrae to prevent nerves from being pinched and provides structural stability to the spine. Also, the inside of the cage is filled with bone graft material which eventually fuses permanently with the adjacent vertebrae into a single unit.

[0005] The use of fusion cages for fusion and stabilization of vertebrae in the spine is known in the prior art. U.S. Pat. No. 4,961,740 to Ray, et al. entitled. "V-Thread Fusion Cage and Method of Fusing a Bone Joint," discloses a fusion cage with a threaded outer surface, where the crown of the thread is sharp and cuts into the bone. Perforations are provided in valleys between adjacent turns of the thread. The cage can be screwed into a threaded bore provided in the bone structure at the surgical site and then packed with bone chips which promote fusion.

[0006] U.S. Pat. No. 5,015,247 to Michelson entitled, "Threaded Spinal Implant," discloses a fusion implant comprising a cylindrical member having a series of threads on the exterior of the cylindrical member for engaging the vertebrae to maintain the implant in place and a plurality of openings in the cylindrical surface.

[0007] U.S. Pat. No. 6,342,074 to Simpson entitled, "Anterior Lumbar Underbody Fusion Implant and Method For Fusing Adjacent Vertebrae," discloses a one-piece spinal fusion implant comprising a hollow body having an access passage for insertion of bone graft material into the inter-vertebral space after the implant has been affixed to adjacent vertebrae. The implant provides a pair of screw-receiving passages that are oppositely inclined relative to a central plane. In one embodiment, the screw-receiving passages enable the head of an orthopaedic screw to be retained entirely within the access passage.

[0008] U.S. Pat. No. 5,885,287 to Bagby entitled, "Self-tapping Interbody Bone Implant," discloses a bone joining implant with a rigid, implantable base body having an outer surface with at least one bone bed engaging portion configured for engaging between a pair of bone bodies to be joined, wherein at least one spline is provided by the bone bed engaging portion, the spline being constructed and arranged to extend outwardly of the body and having an undercut portion.

[0009] U.S. Pat. No. 6,582,467 to Teitelbaum et al. entitled, "Expandable Fusion Cage," discloses an expandable fusion cage where the surfaces of the cage have multiple portions cut out of the metal to form sharp barbs. As the cage is expanded, the sharp barbs protrude into the subcortical bone of the vertebrae to secure the cage in place. The cage is filled with bone or bone matrix material.

[0010] U.S. Pat. No. 5,800,550 to Sertich entitled, "Interbody Fusion Cage," discloses a prosthetic device which includes an inert generally rectangularly shaped support body adapted to be seated on hard end plates of vertebrae. The support body has top and bottom faces. A first peg is movably mounted in a first aperture located in the support body, and the first aperture terminates at one of the top and bottom faces of the support body. Further, the first peg projects away from the one of the top and bottom faces and into an adjacent vertebra to secure the support body in place relative to the vertebra.

[0011] U.S. Pat. No. 6,436,140 to Liu et al. entitled, "Expandable Interbody Fusion Cage and Method for Insertion," discloses an expandable hollow interbody fusion device, wherein the body is divided into a number of branches connected to one another at a fixed end and separated at an expandable end. The expandable cage may be inserted in its substantially cylindrical form and may be expanded by movement of an expansion member to establish lordosis of the spine. An expansion member interacts with the interior surfaces of the device to maintain the cage in the expanded condition and provide a large internal chamber for receiving bone in-growth material.

[0012] These patents all disclose fusion cage devices that can be inserted between vertebrae of the spine in an invasive surgical procedure. Such an invasive surgical procedure requires a long recovery period.

SUMMARY OF THE INVENTION

[0013] The present invention is a bone fusion device for insertion between bones that are to be fused together, such as, for example, the vertebrae of a spinal column. The bone fusion device comprises one or more extendable tabs. The bone fusion device is in its most compact state when the tabs are aligned with the body of the device such that the tabs lie within the exterior of the device. In this compact form, the

bone fusion device is preferably inserted between the vertebrae by using an arthroscopic procedure. The bone fusion device of some embodiments is filled with bone graft material. In these embodiments, the bone graft material is typically relocated from the interior to the exterior of the bone fusion device by using a lead screw. After the device has been positioned between the vertebrae, and the lead screw is inserted to optionally deliver the bone graft material, selected tabs are extended. Preferably, two tabs are extended upon rotating a rotating means wherein extending blocks travel up the screw pushing out the angled tabs as the extending blocks approach the ends of the bone fusion device. The position of each tab relative to the bone fusion device is adjustable depending upon the configuration of the associated rotating means. In this way, the tabs are advantageously positioned in the confined space between the vertebrae to help brace the device until the bone has fused. Further, the tabs of the bone fusion device provide a larger surface area to which the bones attach and fuse during a healing period.

[0014] According to an embodiment of the present invention, the body of the bone fusion device is a round cylinder with end faces. The bone fusion device has conduits or holes that allow the bone graft material within the device to flow to the exterior of the device where the material contacts and grafts to the vertebrae. The extendable tabs are arranged in various configurations on the exterior of the bone fusion device, including the end faces. Preferably, the bone fusion device is rectangular and the tabs are attached to the body of the device on more than one side to optimally brace the device from multiple directions between the adjacent vertebrae. Alternatively, the bone fusion device has a rectangular shape with end faces and extendable tabs attached to multiple exterior surfaces.

[0015] Optionally, the bone fusion device of some embodiments includes protrusions, threading, and/or sharp features on the exterior surface and/or the extendable tabs. These features are configured to engage the adjacent vertebrae to provide a tighter interface between the device and the vertebrae.

BRIEF DESCRIPTION OF THE DRAWINGS

[0016] **FIG. 1** illustrates a bone fusion device in accordance with some embodiments of the invention.

[0017] **FIG. 2** illustrates a bone fusion device according to an alternative embodiment of the present invention.

[0018] FIGS. **3**A-B illustrate a section of a vertebral column showing the bone fusion device inserted between two adjacent vertebrae in place of an intervertebral disc.

[0019] FIGS. **4**A-B illustrate a detailed view of the worm screw drive and the extendable tabs of some embodiments.

[0020] FIGS. **5**A-B illustrate the small form factor of some embodiments.

[0021] FIGS. **6**A-B illustrate a cross section view of the small form factor of some embodiments.

[0022] FIGS. **7**A-B are perspective drawings illustrating the tabs and tab bays of some embodiments.

[0023] **FIG. 8** illustrates a process flow in accordance with some embodiments of the invention.

[0024] **FIG. 9** illustrates a top perspective view of the bone fusion device in some embodiments of the invention.

[0025] **FIG. 10** illustrates a top/side perspective view of the bone fusion device in some embodiments of the invention.

[0026] **FIG. 11** illustrates a top/side perspective view of the bone fusion device in some embodiments of the invention.

[0027] **FIG. 12** illustrates a section of a vertebral column showing the bone fusion device inserted between two adjacent vertebrae in place of an intervertebral disc.

[0028] **FIG. 13** illustrates a side perspective view of the bone fusion device in another embodiment of the present invention.

[0029] **FIG. 14A** illustrates a cross sectional view of the bone fusion device with the tabs compacted in another embodiment of the invention.

[0030] **FIG. 14B** illustrates a cross sectional view of the bone fusion device with the tabs extended in another embodiment of the invention.

[0031] **FIG. 15** illustrates a top perspective view of the bone fusion device in the preferred embodiment of the invention.

[0032] **FIG. 16** illustrates a side perspective view of the bone fusion device in the preferred embodiment of the present invention.

[0033] **FIG. 17** illustrates a cross-sectional view of components of the bone fusion device in the preferred embodiment of the present invention.

[0034] **FIG. 18A** illustrates a cross sectional view of the bone fusion device with the tabs compacted in the preferred embodiment of the invention.

[0035] **FIG. 18B** illustrates a cross sectional view of the bone fusion device with the tabs extended in the preferred embodiment of the invention.

DETAILED DESCRIPTION

[0036] In the following description, numerous details and alternatives are set forth for purpose of explanation. However, one of ordinary skill in the art will realize that the invention can be practiced without the use of these specific details. For instance, the figures and description below often refer to the vertebral bones of a spinal column. However, one of ordinary skill in the art will recognize that some embodiments of the invention are practiced for the fusion of other bones, including broken bones and/or joints. In other instances, well-known structures and devices are shown in block diagram form in order not to obscure the description of the invention with unnecessary detail.

[0037] **FIG. 1** illustrates a bone fusion device **100** in accordance with some embodiments of the invention. As shown in this figure, the bone fusion device **100** has a round cylindrical shape and has two end faces, including the end face **140**. In some embodiments, the bone fusion device **100** is constructed from a high strength biocompatible material, such as titanium, which has the strength to withstand compressive and shear forces in the spine that are generated by a patient's body weight and daily movements. The base

biocompatible material is often textured or coated with a porous material conducive to the growth of new bone cells on the bone fusion device **100**.

[**0038**] Also shown in **FIG. 1**, the end face **140** has an opening **145** which allows the insertion of bone graft material into the bone fusion device **100**. The bone graft material includes bone chips from the same patient (autograft), bone chips from a donor (allograft or xenograft), and/or a synthetic bone matrix. The bone graft material typically promotes bone growth during a recovery period after the patient receives bone fusion surgery. As further illustrated in **FIG. 1**, the bone fusion device **100** has several conduits or holes **150**, which permit the bone graft material to contact the vertebral bone after the device **100** has been inserted between the vertebrae of the patient. The bone graft material and the surface texturing of the device **100** encourage the growth and fusion of bone from the neighboring vertebrae. The fusion and healing process will result in the bone fusion device **100** becoming embedded within the two adjacent vertebrae of the spine which eventually fuse together during the healing period.

[**0039**] As further illustrated in **FIG. 1**, several tabs **131**, **132**, **133**, **134**, **135**, and **136** are distributed along the round cylindrical body of the bone fusion device **100**. These tabs **131-136** are each attached to the bone fusion device **100** by a respective rotating means **111**, **112**, **113**, **114**, **115**, and **116**. The rotating means **111-116** is typically a turn screw type assembly. When the bone fusion device **100** is inserted into the patient's body, the tabs **131-136** lie along the body of the device **100**, as shown by the dotted outlines **121-126** of the tabs. Thus, the unextended tabs **121-126** of the bone fusion device **100** provide a compact assembly that is suitable for insertion into the patient's body through an arthroscopic surgical procedure. An arthroscopic procedure is considered minimally invasive and has certain advantages over more invasive conventional surgical procedures. In an arthroscopic procedure, a smaller surgical incision is employed as compared to the size of the incision required for conventional invasive surgery. Moreover, arthroscopic procedures minimize or eliminate the need for excessive retraction of a patient's tissues such as muscles and nerves, thereby minimizing trauma and injury to the muscles and nerves and further reducing the patient's recovery time.

[**0040**] After insertion of the device **100** into the space between the patient's vertebrae, the surgeon selectively extends particular tabs **131-136** by rotating each selected tab's respective rotating means **111-116**. The more each rotating means **111-116** is rotated, the farther its respective tab **131-136** elevates and extends outward from its initial position **121-126** along the body of the device **100**. Each tab's **131-136** position is individually adjustable so as to optimally brace the device **100** between the vertebrae. Due to the compressive forces commonly associated with spinal column vertebrae, some embodiments include a range of motion for each tab that is slightly greater than 90 degrees. It was particularly discovered during the reduction to practice of this aspect of the present invention, that the tabs of these embodiments are rotated to an angle that is slightly more than about 90 degrees with respect to the surface of the bone fusion device. The tabs extended in this configuration were found to be capable of withstanding the greatest amount of compressive force.

[**0041**] The tabs **131-136**, when extended, abut tightly against the surfaces of the vertebrae that are immediately adjacent to the bone fusion device **100**. In some embodiments, the tabs **131-136** have sharp protrusions along the length of the tab for engaging the adjacent vertebrae, while the tabs **131-136** of some embodiments have screw-type threads for screwing into and engaging the vertebrae. Optionally, the tabs of some embodiments have surface texturing to encourage and enhance the growth of new bone on the tabs **131-136**. This surface texturing is often similar to the surface texturing used on the main body of the device **100**. Regardless of their texturing and/or particular physical characteristics, the tabs **131-136** advantageously wedge the bone fusion device **100** in a fixed position between the vertebrae and provide a larger surface area with which the adjacent vertebrae fuses during the healing period. Moreover, bone growth material, such as protein, is typically applied to the tabs **131-136** to stimulate the regeneration of bone cells needed for bone fusion. The application of bone growth material is described further in relation to **FIG. 4**.

[**0042**] In an alternative embodiment of the invention, the tabs of the device **100** have sharp ridges or threads which bite into the adjacent vertebrae, further helping to brace the device between the vertebrae. It will be readily apparent to one skilled in the art that there are a number of variations for the body and the tabs **131-136** of the bone fusion device **100**. For instance, the bone fusion device **100** employs different numbers and/or configurations of tabs in different embodiments. Hence, the tabs **131-136** depicted in **FIG. 1** are merely exemplary. Moreover, the tabs **131-136** are located anywhere over the exterior surface of the bone fusion device **100**, in a variety of orientations. Specifically, the tabs **131-136** are arranged such that when they are extended, the tabs **131-136** act to stabilize the bone fusion device **100** against the vertebrae from several points and directions. Typically, the tighter the bone fusion device **100** is wedged between the adjacent vertebrae by the tabs **131-136**, the more stability the device **100** provides to the vertebrae and the spine of the patient. The tabs **131-136** of the embodiments described above are critical to insure that the device **100** is not dislodged, since movement of the device **100** could cause serious injury to the patient, and especially because the inserted device is situated near the patient's spinal cord.

[**0043**] **FIG. 2** shows an alternative embodiment of the bone fusion device **200**. As shown in this figure, the bone fusion device **200** of some embodiments has a rectangular shape. Similar to the round cylindrical shaped bone fusion device **100** shown in **FIG. 1**, the rectangular bone fusion device **200** has two end faces, including the end face **245** visible in **FIG. 2**, and multiple tabs **211**, **212**, **213**, **214**, **215**, **216**, **217**, and **218** that are attached by rotating means to the exterior surface. The rotating means are screw type assemblies in some embodiments. The tabs **211-218** are also selectively extended after insertion of the bone fusion device **200** between the vertebrae. As before, the insertion of the bone fusion device **200** and the extension of the selected tabs **211-218**, are typically performed by a surgeon during an arthroscopic surgical procedure. The procedure of some embodiments is further described in relation to **FIG. 8**. The rotation of a respective rotating means associated with each tab **211-218**, individually adjusts the position of the associated tab **211-218** such that the device **200** is firmly braced between the two adjacent vertebrae. One skilled in the art

will recognize that the tabs **211-218** are distributed over the exterior surfaces of the bone fusion device **200** in a variety of configurations, which include the ends and the surfaces of the device **200** that are not readily visible in **FIG. 2**. Moreover, as mentioned above, different numbers of tabs **211-218** are distributed over each surface of the bone fusion device **200** of different embodiments. In some embodiments, the surfaces of the bone fusion device **200** and/or the tabs **211-218**, are coated with a porous surface texturing which promotes bone growth.

[**0044**] The end face **245** has an opening **240**, which provides access to a cavity within the interior of the bone fusion device **200**. In some embodiments, bone graft materials, such as the bone chips and/or the synthetic bone matrix that were mentioned above, are pre-loaded into the cavity within the bone fusion device **200** through the opening **240**. Several conduits or holes **250** in the bone fusion device **200** permit the bone graft material to flow from the interior cavity to the exterior surfaces of the device **200** that are in contact with the vertebral bone. Typically, the bone graft material is relocated from the interior cavity to the exterior of the bone fusion device **200**, after the device **200** has been positioned between the vertebrae. However, in some embodiments the bone graft material is delivered to the site of the bone fusion device **200** by arthroscopic means that originate external to the device **200**. Regardless of the delivery means, the bone graft material and the surface texturing of the bone fusion device **200** encourage bone growth and fusion with the adjacent vertebrae that are in contact with the device **200**. As bone fusion and healing progresses, the bone fusion device **200** becomes embedded within the two fused vertebrae of the spine.

[**0045**] **FIG. 3A** illustrates a section of a vertebral column that has a bone fusion device **300** positioned between two vertebrae **330** and **335**. As shown in this figure, the bone fusion device **300** is positioned in a location where an intervertebral disc would normally reside. A flexible disc is typically sandwiched between the two vertebrae of a normal healthy spinal column. For instance, the normal, healthy disc **340** is sandwiched between the vertebrae **337** and **330**. However, for the spinal column illustrated in **FIG. 3**, the intervertebral disc that normally resides between the vertebrae **330** and **335** has been excised and surgical insertion of the bone fusion device **300** has replaced the disc as the supporting structure between the vertebrae **330** and **335**.

[**0046**] **FIG. 3A** further illustrates that the damaged disc that is normally sandwiched between vertebrae **330** and **335** has been totally removed. However, complete removal of the disc is not necessary in order to use the bone fusion device **300** of some embodiments. Typically, only as much of the disc needs to be excised as is required to permit the placement and positioning of the bone fusion device **300**. Additionally, a sufficient amount of the disc is typically removed that allows access to the rotating means **311**, **312**, **313**, and **314**, which control the extension of the tabs **321**, **322**, **323**, and **324**, of the bone fusion device **300**. As mentioned above, additional numbers and configurations of the tabs are distributed over the exterior surfaces of the bone fusion device **300**, including the surfaces that are not visible in **FIG. 3A**.

[**0047**] During the insertion and placement of the bone fusion device **300**, the tabs **321-324** are deposed in a position aligned along the body of the bone fusion device **300**, such that the tabs **3211-324** lie substantially within the exterior surfaces of the device **300**. In some embodiments, the tabs **321-324** are flush with the exterior surface. In these embodiments, the form factor of the bone fusion device **300** is configured to be as compact as possible. For instance, the form factor of some embodiments has a diameter of approximately 0.28 inches and a length of approximately 1.0 inch. In contrast, the form factor of these same embodiments has a diameter of approximately 0.48 inches when the tabs **321-324** are fully extended.

[**0048**] By minimizing the space occupied, the bone fusion device **300** is advantageously inserted arthroscopically into the patient's body. If instead, the device **300** were inserted in its fully extended form, a larger surgical incision would be required, and a greater displacement of the muscles and nerves would be needed. However, its compact form factor allows the bone fusion device **300** to be inserted by advantageously utilizing minimally invasive arthroscopic techniques. Then, the tabs **321-324** of the bone fusion device **300** are extended after arthroscopic insertion to optimally increase the form factor and brace the device **300** between the vertebrae **330** and **335**. In some embodiments, selected tabs **321-324** are extended.

[**0049**] While the particular embodiment described above has a rectangular shape, it will be readily apparent to one skilled in the art that the cross-section of the bone fusion device **300** has different shapes in various embodiments. For instance, a more circular bone fusion device such as the device **100** illustrated in **FIG. 1**, or a device having another shape is employed in conjunction with a set of extendable tabs that are located in various configurations in additional embodiments of the invention. For instance, some embodiments have four rows of tabs, where each row is positioned on a side of the bone fusion device. In some of these embodiments, each row has four tabs. Such an embodiment is further described in relation to **FIG. 7** and is illustrated in its inserted form in **FIG. 3B**. As shown in **FIG. 3B**, a first set of four tabs **311-314** lock the bone fusion device **300** against the vertebra **330**, while a second set of tabs **315-318** lock the bone fusion device **300** against the vertebra **335**.

[**0050**] **FIG. 4A** illustrates the bone fusion device **400** of some embodiments in further detail. As shown in this figure, the bone fusion device **400** includes an interior cavity **405** for the insertion of a lead screw **415**, and one or more tabs **431** each deposed in a tab bay **421**, **422**, **423**, **424**.

[**0051**] The tab bays **421-424** allow the tabs **431** to lie flush and/or within the exterior surface **420** of the bone fusion device **400** when not extended. Also when not extended, the tab **431** and tab bay **421** provides a conduit **450** from the interior cavity **405** to the exterior surface **420** of the bone fusion device **400**, such that the bone graft and/or growth material within the interior cavity **405** has a directed path to the exterior surface **420**. Typically, the insertion of the lead screw **415** forces the material within the interior cavity **405** to relocate to the exterior surface **420**.

[**0052**] The tab **431** includes a rotating means **411** and gear teeth **455**. When the tab **431** is not extended, the gear teeth **455** provide a series of passive grooves by which the lead screw **415** traverses the interior cavity **405**. Typically, the tab **431** remains fixed as the lead screw **415** is screwed into the interior cavity **405**. In these embodiments, the threading of

the lead screw **415** does not address or affect the gear teeth **455** during the insertion of the lead screw **415**.

[**0053**] However, the gear teeth **455** do employ the threading of the lead screw **415** when the lead screw **415** has been fully inserted into the cavity **405**, in some embodiments. For instance, in a particular implementation of the invention, the lead screw **415** is driven into the cavity **405**, until it reaches an endcap **406**. The endcap **406** allows the lead screw **415** to continue rotating in place, but does not allow the lead screw **415** to continue its forward progress through the cavity **405**. When the lead screw **415** of these embodiments rotates without making forward progress, the rotating lead screw's threading contacts and engages the gear teeth **455** of each tab **431**. Accordingly, the motion and angle of the spiraling threads, when applied against the gear teeth **455**, causes the tabs **431** to elevate and extend. The combination of the gear teeth **455** on the tabs **431** and the inserted lead screw **415**, is referred to, in some embodiments, as a worm screw drive mechanism.

[**0054**] In an alternative embodiment of the worm screw drive mechanism, the rotating means **411** is turned to raise the tab **431**. In these embodiments, the rotating means **411** for the tab **431** typically comprises a turn screw type mechanism such that when the rotating means **411** is turned, the gear teeth **455** drive or rotate against the stationary threads of the inserted lead screw **415**. Similarly, due to the angle of the stationary lead screw's spiral threads, the gear teeth **455** cause the tab **431** to elevate and extend above the exterior surface **420** of the bone fusion device **400**.

[**0055**] As mentioned above, the tabs **431** of some embodiments have a range of motion that exceeds 90 degrees with respect to the exterior surface **420** of the bone fusion device **400**. Accordingly, **FIG. 4B** illustrates the tab **431** extended slightly past 90 degrees, which is the optimum position to withstand the compressive force exerted on the vertebrae of some embodiments.

[**0056**] **FIG. 5A** illustrates a closed view of the small form factor for a bone fusion device **500** in accordance with some embodiments. As shown in this figure, the bone fusion device **500** has a tab **531** that is not extended and lies within the exterior surface of the device **500**. In contrast, **FIG. 5B** illustrates the form factor for the bone fusion device **500** with the tab **531** extended, as described above. Similarly, **FIG. 6A** illustrates a cross section view of the bone fusion device **600** having a small form factor, while **FIG. 6B** illustrates the cross section view with the tab **631** extended.

[**0057**] **FIG. 7A** is a perspective drawing illustrating the bone fusion device **700** with four tab bays on four opposite sides of the device **700**, according to some embodiments of the invention. As described above, a tab is deposed in each tab bay and secured by a rotating means. For instance, the tab **731** is deposed in the tab bay **721** and secured by the rotating means **711**. Also shown in **FIG. 7A**, a lead screw **715** is driven into the cavity. As described above, the lead screw **715** provides the thread by which the gear teeth **755** elevate the tabs **731-733**. Accordingly, **FIG. 7B** illustrates the bone fusion device **700** with the tabs **731-733** elevated.

[**0058**] **FIG. 8** is a process flow diagram that summarizes the insertion and use of the bone fusion device according to some embodiments. As shown in this figure, the process **800** begins at the step **805** where a small, minimally invasive surgical incision is performed. The small incision is typically only large enough to permit entry of an arthroscopic surgical tool. Then, the process **800** transitions to the step **810**, where the bone fusion device is inserted through the small incision and delivered to a region between two vertebrae that are to be fused together. Insertion and delivery of the bone fusion device are performed by using arthroscopic tool(s).

[**0059**] At the step **815**, the bone fusion device is positioned in the region where bone fusion is to occur, also typically by using one or more arthroscopic tool(s). Once the bone fusion device is positioned in the region between the two vertebrae, the process **800** transitions to the step **820**, where the lead screw is inserted and driven into the bone fusion device. The lead screw is typically driven into a cavity in the center of the bone fusion device. The cavity contains a bone growth material comprising collagen and/or a matrix for the promotion of bone growth. Accordingly, insertion of the lead screw into the cavity causes the bone growth material to be relocated from the interior cavity to the exterior surface of the bone growth device. The bone fusion device of some embodiments has a particular pattern of conduits or pores that extend from the interior cavity to the exterior surface for facilitating the relocation of bone growth material to particular locations at the exterior of the device. For instance, some embodiments have pores that facilitate the relocation of bone growth material to particular tabs.

[**0060**] At the step **825** of the **FIG. 8**, the tabs are selectively extended to lock the bone fusion device in place in the region between the two vertebrae. The tabs of some embodiments are extended by using the worm screw drive mechanism described above in relation to **FIG. 4**. Once the selected tabs are extended and the bone fusion device is secured in place at the step **825**, the surgical tools are removed from the patient, and the small incision is sutured. Then, the process **800** concludes.

[**0061**] **FIG. 9** illustrates a top perspective view of the bone fusion device in some embodiments. As shown in this figure, the bone fusion device **1000** has a substantially rectangular shape and has two end faces. In some embodiments, the bone fusion device **1000** is constructed from a high strength biocompatible material, such as titanium, which has the strength to withstand compressive and shear forces in the spine that are generated by a patient's body weight and daily movements. The base biocompatible material is often textured or coated with a porous material conducive to the growth of new bone cells on the bone fusion device **1000**. As further illustrated in **FIG. 9**, the bone fusion device **1000** has several conduits or holes **1014** which permit the bone graft material to contact the vertebral bone after the device **1000** has been inserted between the vertebrae of the patient. The bone graft material and the surface texturing of the device **1000** encourage the growth and fusion of bone from the neighboring vertebrae. The fusion and healing process will result in the bone fusion device **1000** becoming embedded within the two adjacent vertebrae of the spine which eventually fuse together during the healing period.

[**0062**] As further illustrated in **FIG. 9**, a first tab **1006** is located on a first side and a second tab **1006** (**FIG. 14A**) is located on an opposing second side. These tabs **1006** are

shaped so that their outer surface is substantially flush with the frame **1004** of the bone fusion device **1000** in an unextended position. Internally, the tabs **1006** have an angled inner surface. Each tab **1006** is shaped such that one end is substantially larger than the opposing smaller end, and the size of the tab in between gradually decreases while going from the larger end to the opposing smaller end. A positioning means **1002** is coupled to an extending block or nut **1010** which travels up or down the positioning means **1002** depending on which way the positioning means **1002** is turned. The positioning means **1002** is typically a screw type assembly. Turning the positioning means **1002** clockwise causes the extending block **1010** to move up the positioning means **1002** towards the head of the positioning means **1002**, whereas turning the positioning means **1002** counterclockwise moves the extending block **1010** away from the head of the positioning means **1002**. When the extending block **1010** is positioned away from the head of the positioning means **1002**, the angled tabs **1006** are compact and are within the frame **1004** of the bone fusion device **1000**. Thus, the unextended tabs **1006** of the bone fusion device **1000** provide a compact assembly that is suitable for insertion into the patient's body through an arthroscopic surgical procedure. An arthroscopic procedure is considered minimally invasive and has certain advantages over more invasive conventional surgical procedures. In an arthroscopic procedure, a smaller surgical incision is employed as compared to the size of the incision required for conventional invasive surgery. Moreover, arthroscopic procedures minimize or eliminate the need for excessive retraction of a patient's tissues such as muscles and nerves, thereby minimizing trauma and injury to the muscles and nerves and further reducing the patient's recovery time. As the positioning means **1002** is rotated causing the extending block **1010** to move closer to the head of the positioning means **1002**, the extending block **1010** pushes the angled tabs **1006** outward causing the tabs **1006** to assert pressure against surrounding bones and securing the bone fusion device **1000** in place. When the extending block **1006** reaches as close to the head of the positioning means **1002** as allowed, the tabs **1006** are fully extended. Furthermore, since the extending block **1010** travels along the positioning means **1002**, such as along the threads of a screw, very precise positions of the tabs **1006** are able to be achieved.

[**0063**] **FIG. 10** illustrates a top/side perspective view of the bone fusion device **1000** in some embodiments. As described above, the bone fusion device **1000** has tabs **1006** initially positioned so that they fit within the frame **1004** of the bone fusion device **1000**. The positioning means **1002** is positioned through the first end face **1018** so that the extending block **1010** is able to travel along the positioning means **1002** causing the tabs **1006** to extend outwardly beyond the frame **1004** of the bone fusion device **1000**. The positioning means **1002** is able to be any device that allows such functionality. Furthermore, if a screw or bolt is utilized as the positioning means **1002**, any type of screw head is acceptable even though the exemplary screw slot shown in **FIG. 10** requires the use of an allen wrench. Slotted, Phillips, Pozidriv, Torx, Robertson, Tri-Wing, Torq-Set, Spanner and any other heads are acceptable alternatives. Also located within the first end face **1018** are one or more apertures **1016** to allow bone graft material to contact the vertebral bone after the device **1000** has been inserted between the vertebrae of the patient. The holes **1014** within the tabs **1006** also permit the insertion of bone graft material.

[**0064**] **FIG. 11** illustrates a top/side perspective view of the bone fusion device **1000** in some embodiments. As described before, the bone fusion device **1000** utilizes the positioning means **1002** to move the extending block **1010** up and down the body of the positioning means **1002** which forces the tabs **1006** to either extend or retract depending on the position of the extending block **1010**. When the extending block **1010** is located near the head of the positioning means **1002**, the extending block **1010** forces the tabs **1006** outward so that the tabs **1006** are extended beyond the frame **1000** to secure the bone fusion device **1000** in place. However, when the extending block **1010** is located away from the head of the positioning means **1002**, the tabs **1006** are situated within the frame **1004**, making the bone fusion device **1000** very compact. Opposing the end of the head of the positioning means is the second end face **1020** which contains an opening **1012** for providing access to a cavity within the interior of the bone fusion device **1000**. In some embodiments, bone graft materials, such as the bone chips and/or the synthetic bone matrix that were mentioned above, are pre-loaded into the cavity within the bone fusion device **1000** through the opening **1012**. The other holes **1014** within the tabs allow the bone graft material to contact the vertebral bone after the device **1000** has been inserted between the vertebrae of the patient.

[**0065**] **FIG. 12** illustrates a section of a vertebral column showing the bone fusion device **1000** inserted between two adjacent vertebrae **330** and **335** in place of an intervertebral disc. As shown in this figure, the bone fusion device **1000** is positioned in a location where an intervertebral disc would normally reside. A flexible disc is typically sandwiched between the two vertebrae of a normal healthy spinal column. For instance, the normal, healthy disc **340** is sandwiched between the vertebrae **337** and **330**. However, for the spinal column illustrated in **FIG. 12**, the intervertebral disc that normally resides between the vertebrae **330** and **335** has been excised and surgical insertion of the bone fusion device **1000** has replaced the disc as the supporting structure between the vertebrae **330** and **335**.

[**0066**] During the insertion and placement of the bone fusion device **1000**, the tabs **1006** are deposed in a position aligned along the body of the bone fusion device **1000**, such that the tabs lie substantially within the exterior surfaces of the device. In some embodiments, the tabs **1006** are flush with the exterior surface. In these embodiments, the form factor of the bone fusion device **1000** is configured to be as compact as possible. For example, the form factor of some embodiments has a diameter of approximately 0.28 inches and a length of approximately 1.0 inch. In contrast, the form factor of these same embodiments has a diameter of approximately 0.48 inches when the tabs **1006** are fully extended. In other embodiments the size could be larger or smaller as needed.

[**0067**] By minimizing the space occupied, the bone fusion device **1000** is advantageously inserted arthroscopically into the patient's body. If instead, the device **1000** were inserted in its fully extended form, a larger surgical incision would be required, and a greater displacement of the muscles and nerves would be needed. However, its compact form factor allows the bone fusion device **1000** to be inserted by

advantageously utilizing minimally invasive arthroscopic techniques. Then, the tabs **1006** of the bone fusion device **1000** are extended after arthroscopic insertion to optimally increase the form factor and brace the device **1000** between the vertebrae **330** and **335**.

[0068] **FIG. 13** illustrates a side view of another embodiment of the bone fusion device **1000'**. The bone fusion device **1000'** utilizes the positioning means **1002** to move the extending block **1010** (**FIG. 9**) up and down the body of the positioning means **1002** which forces the tabs **1006'** to either extend or retract depending on the position of the extending block **1010** (**FIG. 9**). The tabs **1006'** have serrated edges **1026** to further increase the bone fusion device's gripping ability to secure it in place between the bones. When the extending block **1010** (**FIG. 9**) is located near the head of the positioning means **1002**, the extending block **1010** (**FIG. 9**) forces the tabs **1006'** outward so that the tabs **1006'** are extended beyond the frame **1000** to secure the bone fusion device **1000** in place. The tabs **1006'** are each coupled to the frame **1004** of the bone fusion device **1000'** by one or more slots **1028** and one or more pins **1024** wherein the one or more pins **1024** fit within the one or more slots **1028** and are able to travel along the interior of the one or more slots **1028**. When the extending block **1010** (**FIG. 9**) is located away from the head of the positioning means **1002**, the tabs **1006'** are situated within the frame **1004**, making the bone fusion device **1000'** very compact. The holes **1014** within the tabs allow the bone graft material to contact the vertebral bone after the device **1000'** has been inserted between the vertebrae of the patient.

[0069] **FIG. 14A** illustrates a cross sectional view of the bone fusion device **1000'** with the tabs **1006'** with serrated edges **1026** compacted in another embodiment. When the extending block **1010** is positioned away from the head of the positioning means **1002** and close to the second end face **1020** (**FIG. 11**), the tabs **1006'** are positioned within the frame **1004** of the bone fusion device **1000'**. The tabs **1006'** are coupled to the frame **1004** of the bone fusion device by the one or more slots **1028** and the one or more pins **1024** wherein the one or more pins **1024** fit within the one or more slots **1028** and are able to travel along the interior of the one or more slots **1028**.

[0070] **FIG. 14B** illustrates a cross sectional view of the bone fusion device **1000'** with the tabs **1006'** with serrated edges **1026** extended in another embodiment. When the extending block **1010** is positioned near the head of the positioning means **1002** and close to the first end face **1018** (**FIG. 10**), the tabs **1006'** extend beyond the frame **1004** of the bone fusion device **1000'** and ultimately secure the bone fusion device **1000'** between two bones. The tabs **1006'** extend because the extending block **1010** pushes the angled tabs **1006** outwardly as shown by the arrows **1022**. The position of the extending block **1010** is changed by rotating the positioning means **1002** either clockwise or counterclockwise. The tabs **1006'** are extended outward due to the force of the extending block **1010**. With the tabs **1006'** coupled to the frame **1004** of the bone fusion device by the one or more slots **1028** and the one or more pins **1024**, the tabs **1006'** are able to extend beyond the frame of the bone fusion device **1000'** as the one or more pins **1024** travel within the interior of the one or more slots **1028**.

[0071] Alternatively, the bone fusion device includes one or more pivots or any other rotating means that allows movement of the tabs wherein the one or more pivots are located at either end of the tabs.

[0072] To utilize the bone fusion device is some embodiments, it is initially configured in a compact position such that the extending block is located away from the head of the positioning means and towards the second end face thereby allowing the tabs to rest within the frame of the bone fusion device. The compact bone fusion device is then inserted into position within the patient. The surgeon is able to then the expand the bone fusion device by rotating the positioning means which moves the extending block towards the head of the positioning means and the first end face. As the extending block moves closer to the first end face, the tabs are pushed outwardly from the pressure of the extending block against the angled tabs. Eventually the extending block moves close enough to the first end face causing enough pressure between the extended tabs and the bones to be fused. At that point the bone fusion device is able to remain in place. Thereafter, material for fusing the bones together is inserted through the holes and openings within the bone fusion device.

[0073] **FIG. 15** illustrates a top perspective view of the bone fusion device in the preferred embodiment of the invention. As shown in this figure, the bone fusion device **1500** has a substantially rectangular shape and has two end faces. The bone fusion device **1500** is preferably constructed from a high strength biocompatible material, such as titanium, which has the strength to withstand compressive and shear forces in the spine that are generated by a patient's body weight and daily movements. The base biocompatible material is often textured or coated with a porous material conducive to the growth of new bone cells on the bone fusion device **1500**. The bone fusion device **1500** has several conduits or holes **1520** (**FIG. 16**) and **1534** which permit the bone graft material to contact the vertebral bone after the device **1500** has been inserted between the vertebrae of the patient. The bone graft material and the surface texturing of the device **1500** encourage the growth and fusion of bone from the neighboring vertebrae. The fusion and healing process will result in the bone fusion device **1500** becoming embedded within the two adjacent vertebrae of the spine which eventually fuse together during the healing period.

[0074] As further illustrated in **FIG. 15**, tabs **1530** are located on opposing sides of the bone fusion device **1500**. The tabs **1530** are shaped so that their outer surface is substantially flush with the frame **1514** of the bone fusion device **1500** in a nonextended position. Internally, the tabs **1530** have an angled inner surface. Each tab **1530** is shaped such that the ends are larger than the middle, and the size of the tab **1530** gradually increases while going from the middle to the ends. A positioning means **1508** within the frame **1514** of the bone fusion device **1500** comprises a first screw **1502** and a second screw **1504** coupled together. The first screw **1502** is threaded opposite of the second screw **1504**. For example, if the first screw **1502** is left threaded, the second screw **1504** is right threaded or visa versa. Furthermore, the first screw **1502** is of a slightly different size than the second screw **1504**. The positioning means **1508** is coupled to a first extending block **1510** and a second extending block **1512**. Specifically the first extending block **1510** is coupled to the first screw **1502** and the second extending block **1512** is coupled to the second screw **1504**. The first extending block **1510** and the second extending

block **1512** are positioned in the middle of the bone fusion device **1500** in the compact position. When the positioning means **1508** is turned appropriately, the extending blocks **1510** and **1512** each travel outwardly on their respective screws **1502** and **1504**. As the extending blocks **1510** and **1512** travel outwardly, they push the tabs **1530** outward. To retract the tabs **1530**, the positioning device **1508** is turned in the opposite direction and the extending blocks **1510** and **1512** will each travel back to the middle on their respective screws **1502** and **1504**. When the extending blocks **1510** and **1512** are positioned in the middle of the bone fusion device **1500**, the tabs **1530** are compact and are within the frame **1514** of the bone fusion device **1500**. Thus, the nonextended tabs **1530** of the bone fusion device **1500** provide a compact assembly that is suitable for insertion into the patient's body through an arthroscopic surgical procedure. An arthroscopic procedure is considered minimally invasive and has certain advantages over more invasive conventional surgical procedures. In an arthroscopic procedure, a smaller surgical incision is employed as compared to the size of the incision required for conventional invasive surgery. Moreover, arthroscopic procedures minimize or eliminate the need for excessive retraction of a patient's tissues such as muscles and nerves, thereby minimizing trauma and injury to the muscles and nerves and further reducing the patient's recovery time.

[**0075**] As the positioning means **1508** is rotated causing the extending blocks **1510** and **1512** to move closer to the ends of the respective screws **1502** and **1504**, the extending blocks **1510** and **1512** push the tabs **1530** outward causing the tabs **1530** to assert pressure against surrounding bones and securing the bone fusion device **1500** in place. When the extending blocks **1510** and **1512** reach as close to the head of the positioning means **1508** as allowed, the tabs **1530** are fully extended. Furthermore, since the extending blocks **1510** and **1512** travel along the positioning means **1508**, along the threads of the screws **1502** and **1504**, very precise positions of the tabs **1530** are able to be achieved. The tabs **1530** have serrated edges **1536** to further increase the bone fusion device's gripping ability to secure it in place between the bones.

[**0076**] To secure the bone fusion device **1500** in place, a user generally utilizes an implement such as a screw driver to turn the positioning means **1508**. Screw drivers unfortunately have the ability to slip out of place. When performing surgery near someone's spine, it is preferable to prevent or at least minimize the slipping ability. To do so, channels **1522** are implemented to receive a tool (not shown). The tool (not shown) has attachments that fit within the channels **1522** to secure the tool (not shown) in place.

[**0077**] **FIG. 16** illustrates a side perspective view of the bone fusion device in the preferred embodiment of the present invention. The bone fusion device **1500** utilizes the positioning means **1508** comprising the first screw **1502** and the second screw **1504** to move the first extending block **1510** and the second extending block **1512** outwardly from the middle of the bone fusion device **1500** towards its ends. The positioning means **1508** is held in place but permitted to turn utilizing one or more first pins **1516**. The one or more first pins **1516** are secured within a retaining groove **1506** (**FIG. 17**) of the positioning means **1508**. The extending blocks **1510** and **1512** force the tabs **1530** to either extend or retract depending on where the extending blocks **1510** and **1512** are positioned. As described above, the tabs **1530** have serrated edges **1536** to further increase gripping ability. The tabs **1530** are each coupled to the frame **1514** of the bone fusion device **1500** by one or more slots **1532** (**FIG. 18A**) and one or more second pins **1518** wherein the one or more second pins **1518** fit within the one or more slots **1532** and are able to travel along the interior of the one or more slots **1532**. The holes **1534** within the tabs **1530** allow the bone graft material to contact the vertebral bone after the device **1500** has been inserted between the vertebrae of the patient. A set of holes **1520** within the frame **1514** also allow bone graft material to be inserted within the bone fusion device **1500** afer the bone fusion device **1500** has been placed. The channels **1522** implemented to receive a tool are shown as well.

[**0078**] **FIG. 17** illustrates a cross-sectional view of components of the bone fusion device in the preferred embodiment of the present invention. As described above, the positioning means **1508** comprises a first screw **1502** and a second screw **1504** wherein the first screw **1502** is threaded differently than that of the second screw **1504**. Furthermore, the first screw **1502** is of a slightly different size than the second screw **1504**. For example, the first screw **1502** is an 8-32 screw and the second screw is a 6-32 screw. A retaining groove **1506** is utilized to secure the positioning means **1508** in place. To ensure that a device (not shown) does not slip while turning the positioning means **1508**, channels **1522** are utilized to secure the device. A first extending block **1510** and a second extending block **1512** are utilized with the positioning means **1508** to extend and compact a plurality of tabs **1530**. The first extending block **1510** has an internal opening to fit around the first screw **1502**. The second extending block **1512** has an internal opening to fit around the second screw **1504**. The frame **1514** of the bone fusion device **1500** contains a set of holes **1520** within the frame **1514** for allowing bone graft material to be inserted. Furthermore, one or more first pins **1516** secure the positioning means within the frame **1514**. One or more second pins **1516** in conjunction with one or more slots **1532** secure the tabs **1530** to the frame **1514**.

[**0079**] **FIG. 18A** illustrates a cross sectional view of the bone fusion device with the tabs compacted in the preferred embodiment of the invention. When the extending blocks **1510** and **1512** are positioned in the middle of the positioning means **1508** with the first screw **1502** and the second screw **1504**, the tabs **1530** are positioned within the frame **1514** of the bone fusion device **1500**. The positioning means **1508** contains a retaining groove **1506** for holding the positioning means **1508** in place with one or more first pins **1516**. The tabs **1530** are coupled to the frame **1514** of the bone fusion device **1500** using the one or more slots **1532** and the one or more second pins **1518** wherein the one or more second pins **1518** fit within the one or more slots **1532** and are able to travel along the interior of the one or more slots **1532**.

[**0080**] **FIG. 18B** illustrates a cross sectional view of the bone fusion device with the tabs extended in the preferred embodiment of the invention. As shown in **FIG. 18A**, the bone fusion device **1500** is compressed when the extending blocks **1510** and **1512** are in the middle of the bone fusion device **1500**. As a user turns the positioning means **1508**, the extending blocks **1510** and **1512** gradually move outward from the middle. If the user turns the positioning means

1508 in the opposite direction, the extending blocks move back towards the middle. As the extending blocks **1510** and **1512** are moving outward, they push on the tabs **1530**. The tabs **1530** extend because the extending blocks **1510** and **1512** exert force the angled tabs **1530** outwardly as shown by the arrows **1540**. When the extending blocks **1510** and **1512** are positioned near the ends of the bone fusion device **1500**, the tabs **1530** extend beyond the frame **1514** of the bone fusion device **1500** and ultimately secure the bone fusion device **1500** between two bones. With the tabs **1530** coupled to the frame **1514** of the bone fusion device **1500** by the one or more slots **1532** and the one or more second pins **1518**, the tabs **1530** are able to extend beyond the frame **1514** of the bone fusion device **1500** as the one or more second pins **1518** travel within the interior of the one or more slots **1532**.

[**0081**] To utilize the bone fusion device in the preferred embodiment, it is initially configured in a compact position such that the extending blocks are located in the middle of the bone fusion device thereby allowing the tabs to rest within the frame of the bone fusion device. The compact bone fusion device is then inserted into position within the patient. The surgeon is able to then the expand the bone fusion device by rotating the positioning means which moves the extending blocks towards the opposing ends of the bone fusion device—one near the head of the positioning means and the other towards the tail of the positioning means. As the extending blocks move away from the middle, the tabs are pushed outwardly from the pressure of the extending block against the angled tabs. Eventually the extending blocks exert a satisfactory force between the extended tabs and the bones to be fused. At that point the bone fusion device is able to remain in place. Thereafter, material for fusing the bones together is inserted through the holes and openings within the bone fusion device.

[**0082**] As mentioned above, the small incision and minimally invasive (arthroscopic) surgical procedure advantageously promote health and rapid recovery by the patient. Preferably, bone growth occurs around the bone fusion device and particularly at the locations of the extended tabs, such that the bone fusion device is further secured by the bone growth, which further promotes a superior, robust bone fusion result.

[**0083**] The present invention has been described in terms of specific embodiments incorporating details to facilitate the understanding of principles of construction and operation of the invention. Such reference herein to specific embodiments and details thereof is not intended to limit the scope of the claims appended hereto. It will be apparent to those skilled in the art that modification may be made in the embodiments chosen for illustration without departing from the spirit and scope of the invention.

What is claimed is:

1. A bone fusion device for insertion between bones comprising:

a. first and second ends;

b. an interior cavity deposed between the first and second ends;

c. an exterior surface;

d. a conduit providing a pathway from the interior cavity to the exterior surface;

e. one or more tabs for bracing the bone fusion device in a space between the bones;

f. a positioning element positioned through the first end and substantially within the interior cavity; and

g. a plurality of extending blocks coupled to the positioning element for moving the one or more tabs.

2. The bone fusion device as claimed in claim 1, wherein the positioning element comprises a first screw and a second screw.

3. The bone fusion device as claimed in claim 2, wherein the first screw is threaded oppositely from the second screw.

4. The bone fusion device as claimed in claim 2, wherein the first screw is larger than the second screw.

5. The bone fusion device as claimed in claim 1, wherein the one or more tabs are shaped with ends that are larger than the middle.

6. The bone fusion device as claimed in claim 1, wherein the one or more tabs contain a narrow middle section and gradually increase in size outwardly to the ends.

7. The bone fusion device as claimed in claim 1, wherein the extending blocks are nuts.

8. The bone fusion device as claimed in claim 1, further comprising a plurality of channels for receiving a tool to securely rotate the positioning means.

9. The bone fusion device as claimed in claim 1, wherein the plurality of extending blocks move the one or more tabs when the positioning element is rotated.

10. The bone fusion device as claimed in claim 1, further comprising serrated edges on the one or more tabs.

11. A bone fusion device for insertion between adjacent bones, comprising:

a. a hollow body having one or more holes along a length of the hollow body;

b. one or more moveable tabs each attached to the hollow body by a pin and a slot, wherein the one or more moveable tabs are aligned along a surface of the hollow body in a compact position during insertion into a patient;

c. a positioning element coupled through the hollow body and substantially within the hollow body; and

d. a plurality of extending blocks coupled to the positioning element for moving the one or more moveable tabs when the positioning element is rotated.

12. The bone fusion device as claimed in claim 11, wherein the positioning element comprises a first screw and a second screw.

13. The bone fusion device as claimed in claim 12, wherein the first screw is threaded oppositely from the second screw.

14. The bone fusion device as claimed in claim 12, wherein the first screw is larger than the second screw.

15. The bone fusion device as claimed in claim 11, wherein the one or more moveable tabs are shaped with ends that are larger than the middle.

16. The bone fusion device as claimed in claim 11, wherein the one or more moveable tabs contain a narrow middle section and gradually increase in size outwardly to the ends.

17. The bone fusion device as claimed in claim 11, wherein the plurality of extending blocks are nuts.

18. The bone fusion device as claimed in claim 11, further comprising a plurality of channels for receiving a tool to securely rotate the positioning means.

19. The bone fusion device as claimed in claim 11, further comprising serrated edges on the one or more moveable tabs.

20. A bone fusion device for insertion between adjacent bones, comprising:

a. a hollow body having one or more holes along a length of the hollow body;

b. one or more moveable tabs each attached to the hollow body by a pin and a slot, wherein the one or more moveable tabs are aligned along a surface of the hollow body in a compact position during insertion into a patient, further wherein the ends of the one or more moveable tabs are larger than the middle of the one or more moveable tabs;

c. a positioning element coupled through the hollow body and substantially within the hollow body, wherein the positioning element comprises a first screw and a second screw; and

d. a plurality of extending blocks coupled to the positioning element for moving the one or more moveable tabs when the positioning element is rotated.

21. The bone fusion device as claimed in claim 20, wherein the first screw is threaded oppositely from the second screw.

22. The bone fusion device as claimed in claim 20, wherein the first screw is larger than the second screw.

23. The bone fusion device as claimed in claim 20, wherein the plurality of extending blocks are nuts.

24. The bone fusion device as claimed in claim 20, further comprising a plurality of channels for receiving a tool to securely rotate the positioning means.

25. The bone fusion device as claimed in claim 20, further comprising serrated edges on the one or more moveable tabs.

26. A method of implanting a bone fusion device between bones, the method comprising:

a. inserting the bone fusion device between the bones, wherein the bone fusion device comprises an internal cavity, an exterior surface, a positioning element, an extending block and one or more moveable tabs;

b. pre-configuring the one or more moveable tabs to lie within the exterior surface by using the positioning element with the plurality of extending blocks such that the bone fusion device has a minimized form factor; and

c. extending the one or more tabs to a desired position by moving the plurality of extending blocks by rotating the positioning element.

27. The method as claimed in claim 26, wherein the positioning element comprises a first screw and a second screw.

28. The method as claimed in claim 27, wherein the first screw is threaded oppositely from the second screw.

29. The method as claimed in claim 27, wherein the first screw is larger than the second screw.

30. The method as claimed in claim 26, wherein the one or more tabs are shaped with ends that are larger than the middle.

31. The method as claimed in claim 26, wherein the one or more tabs contain a narrow middle section and gradually increase in size outwardly to the ends.

32. The method as claimed in claim 26, wherein rotating the positioning element clockwise moves the plurality of extending blocks, forcing the one or more moveable tabs outward.

33. The method as claimed in claim 26, wherein rotating the positioning element counterclockwise moves the plurality of extending blocks, allowing the one or more moveable tabs to move inward.

34. The method as claimed in claim 26, further comprising before implantation, depositing a bone graft material into the cavity.

35. The method as claimed in claim 26, further comprising applying bone growth material to the one or more tabs after extension, wherein the bone growth material stimulates regeneration of bone cells in the bones.

36. The method as claimed in claim 26, wherein the one or more moveable tabs further comprise serrated edges.

37. The method as claimed in claim 26, further comprising utilizing a plurality of channels to securely rotate the positioning element utilizing a tool that fits with the plurality of channels.

* * * * *