US 20050278026A1

(19) United States

(12) Patent Application Publication

(10) Pub. No.: US 2005/0278026 A1

(43) Pub. Date: Dec. 15, 2005

Gordon et al.

(54) EXPANDABLE INTERVERTEBRAL IMPLANT WITH WEDGED EXPANSION MEMBER

(76) Inventors: **Charles R. Gordon**, Tyler, TX (US); **Corey T. Harbold**, Tyler, TX (US); **Heather S. Hanson**, San Antonio, TX (US)

Correspondence Address:
MEYERTONS, HOOD, KIVLIN, KOWERT & GOETZEL, P.C.
P.O. BOX 398
AUSTIN, TX 78767-0398 (US)

(21) Appl. No.: **11/134,069**

(22) Filed: **May 20, 2005**

Related U.S. Application Data

(63) Continuation of application No. 11/050,632, filed on Feb. 3, 2005, which is a continuation-in-part of application No. 10/634,950, filed on Aug. 5, 2003, and which is a continuation-in-part of application No. 10/660,155, filed on Sep. 11, 2003, and which is a continuation-in-part of application No. 10/777,411, filed on Feb. 12, 2004, and which is a continuation-in-part of application No. PCT/US04/25090, filed on Aug. 4, 2004, which is a continuation of application No. 10/634,950, filed on Aug. 5, 2003, and which is a continuation of application No. 10/660,155, filed on Sep. 11, 2003, and which is a continuation of application No. 10/777,411, filed on Feb. 12, 2004, which is a continuation-in-part of application No. 10/634,950, filed on Aug. 5, 2003.
Said application No. 10/660,155 is a continuation-in-part of application No. 10/634,950, filed on Aug. 5, 2003.

Publication Classification

(51) **Int. Cl.**[7] **A61F 2/44**

(52) **U.S. Cl.** **623/17.11**

(57) **ABSTRACT**

An artificial functional spinal unit including an expandable intervertebral implant that can be inserted via a posterior surgical approach and used with one or more facet replacement devices to provide an anatomically correct range of motion is described. Lordotic and non-lordotic expandable, articulating implants and cages are described, along with embodiments of facet replacement devices and instruments for insertion. Methods of insertion are also described.

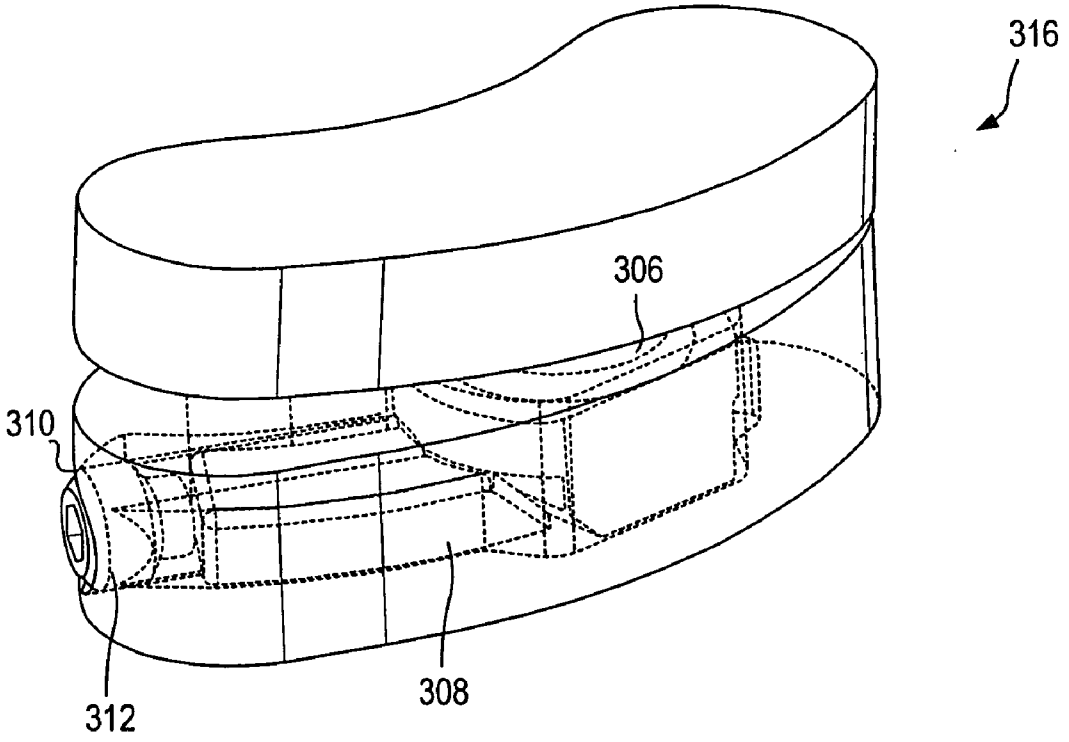

MEDTRONIC EXHIBIT 1013

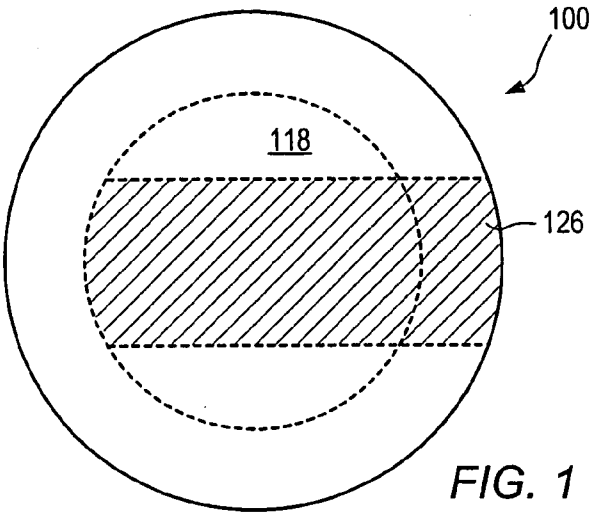

FIG. 1

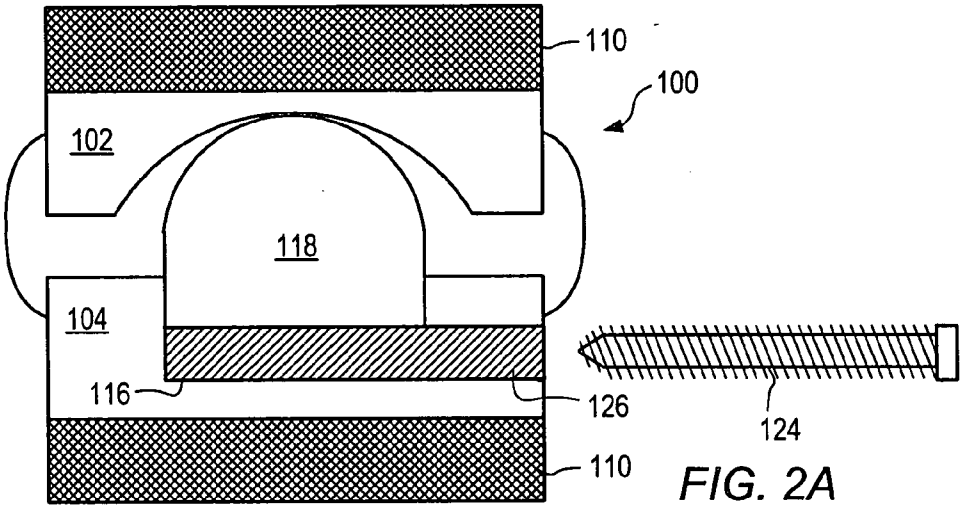

FIG. 2A

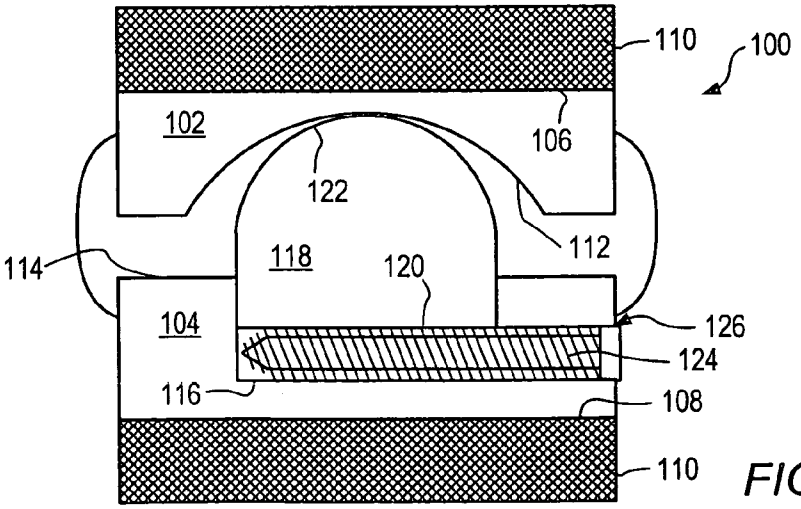

FIG. 2B

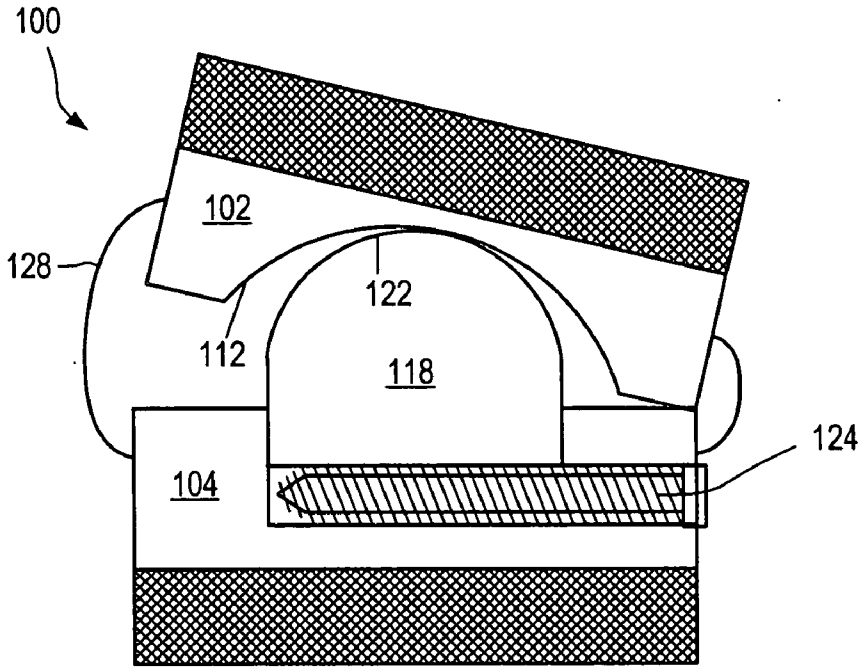

FIG. 3A

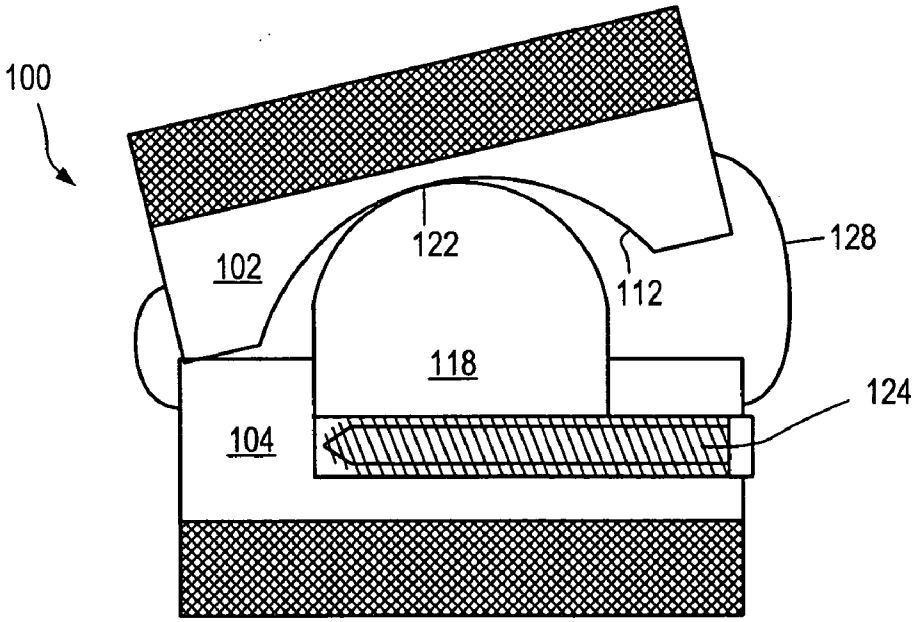

FIG. 3B

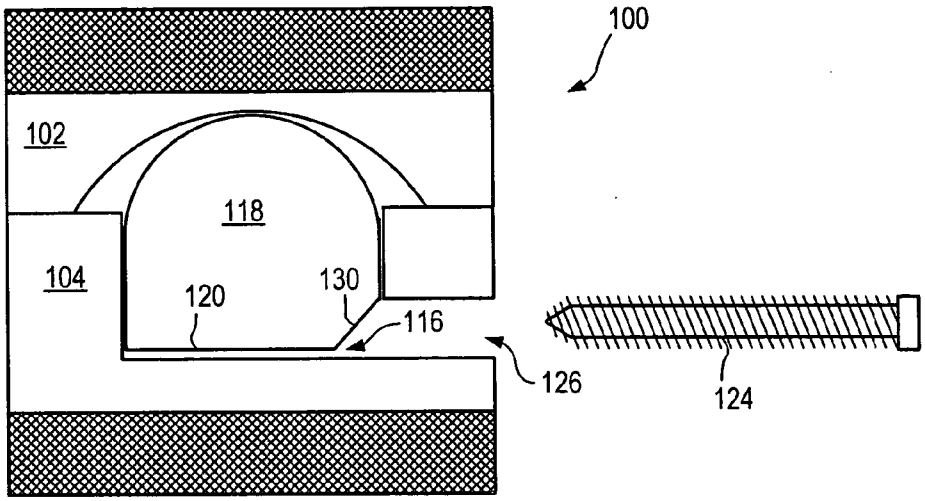
100
102
118
104
120
130
116
126
124

FIG. 4A

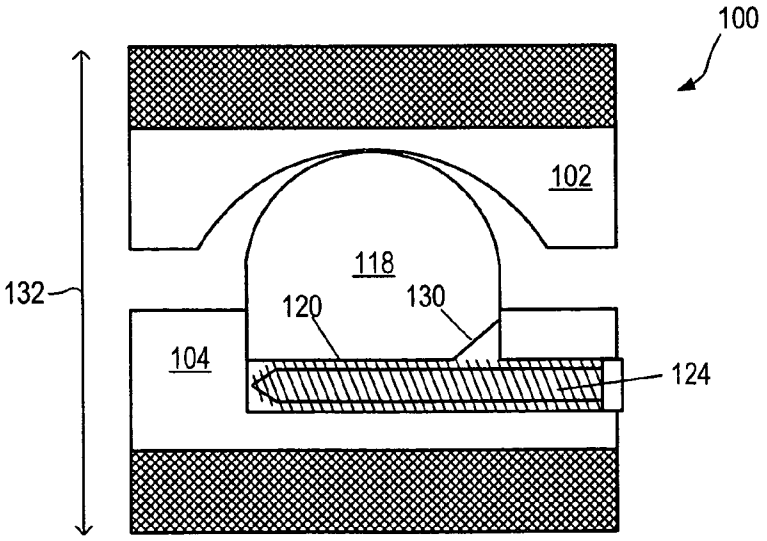
100
102
118
132
120
130
104
124

FIG. 4B

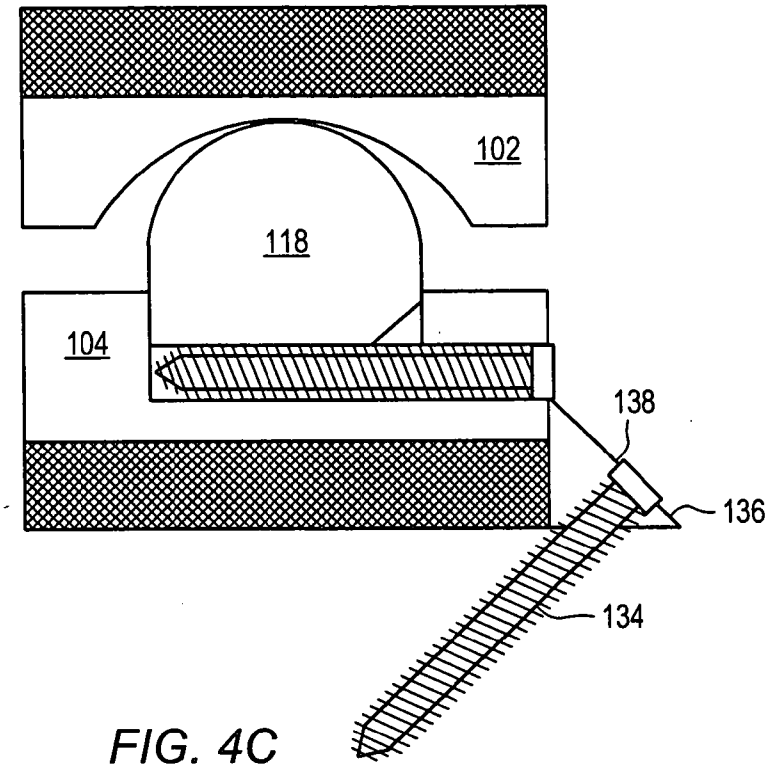

FIG. 4C

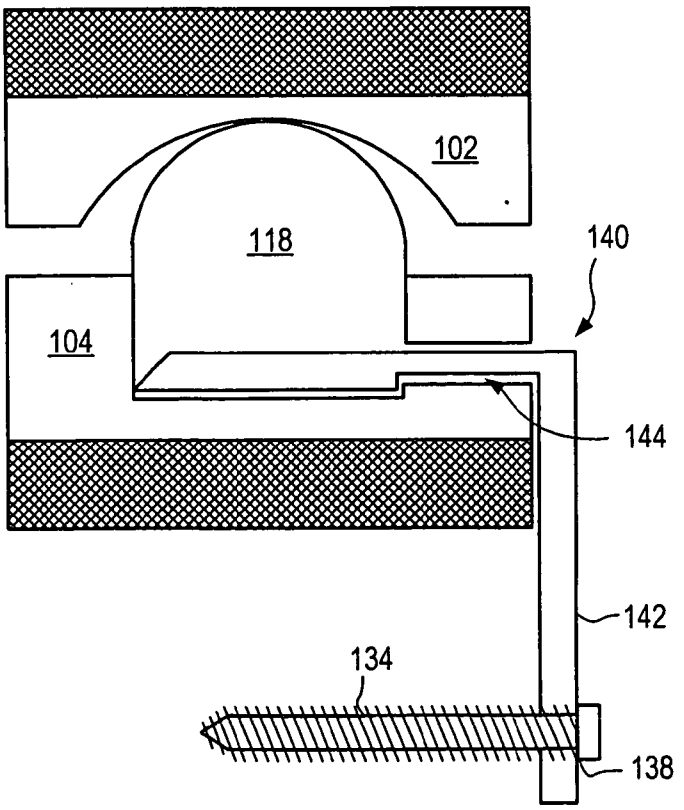

FIG. 4D

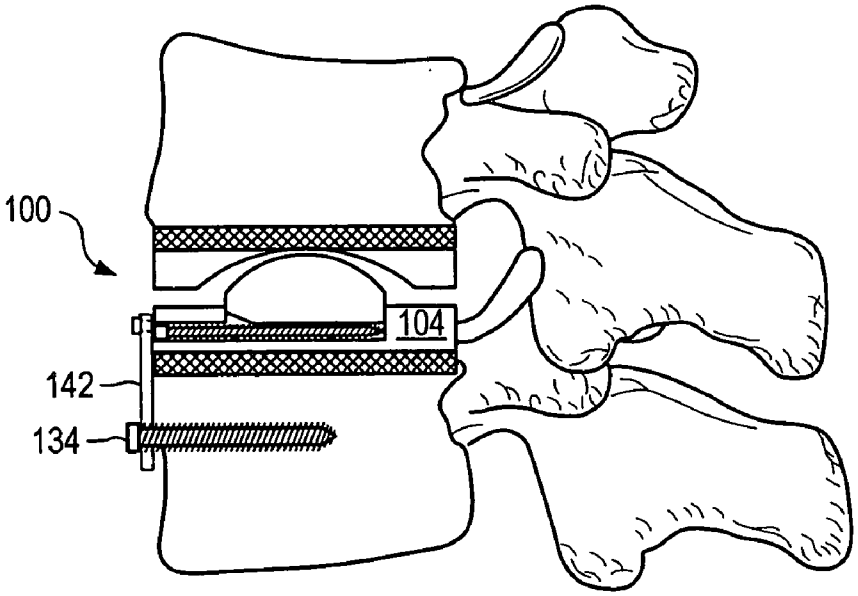

FIG. 4E

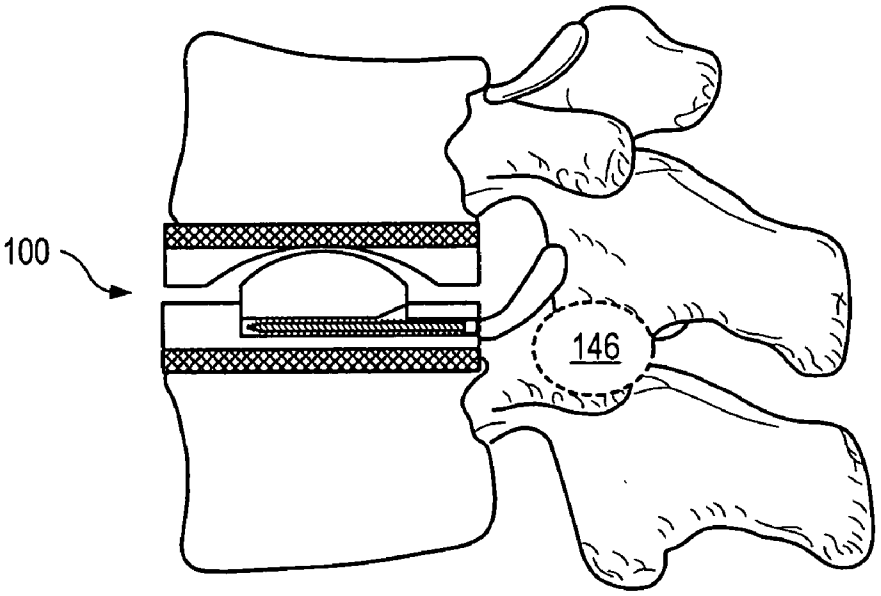

FIG. 5

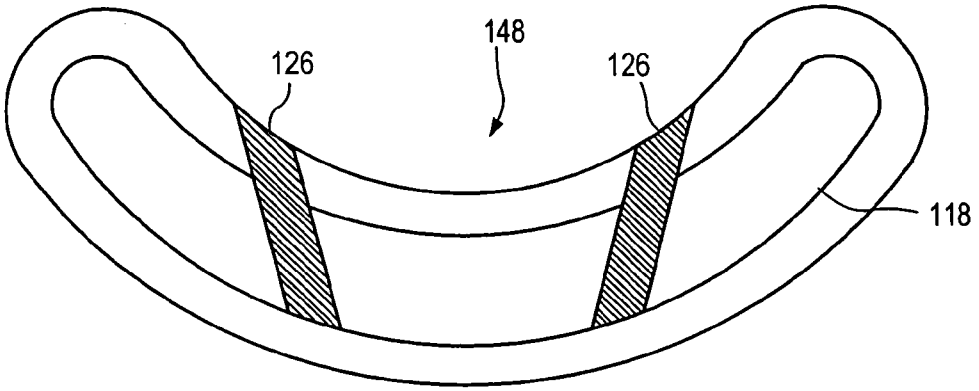

FIG. 6A

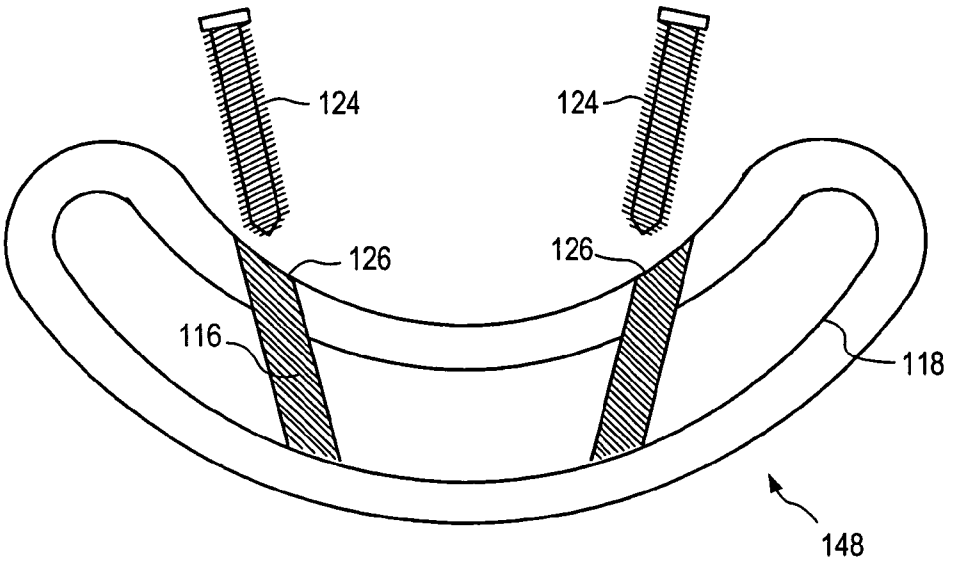

FIG. 6B

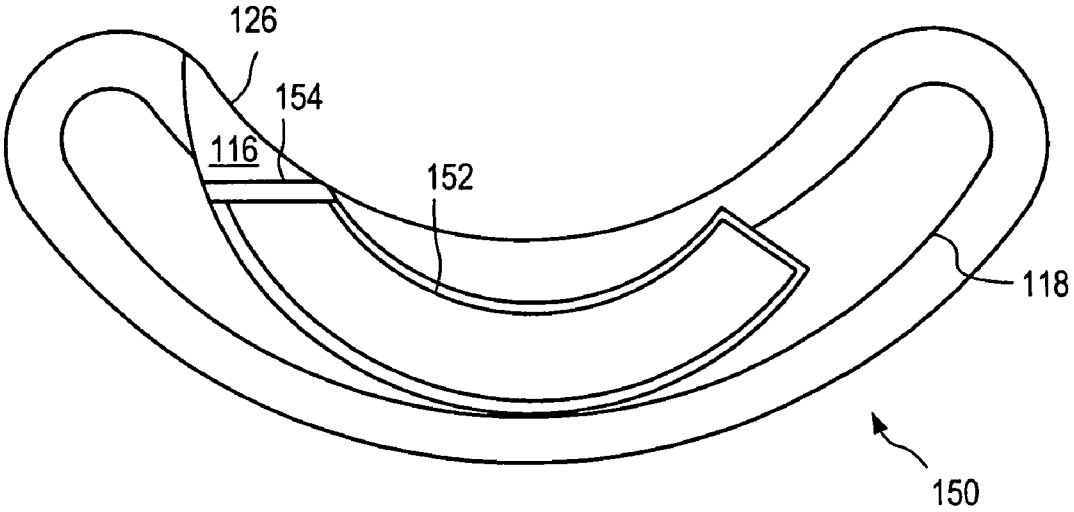

FIG. 6C

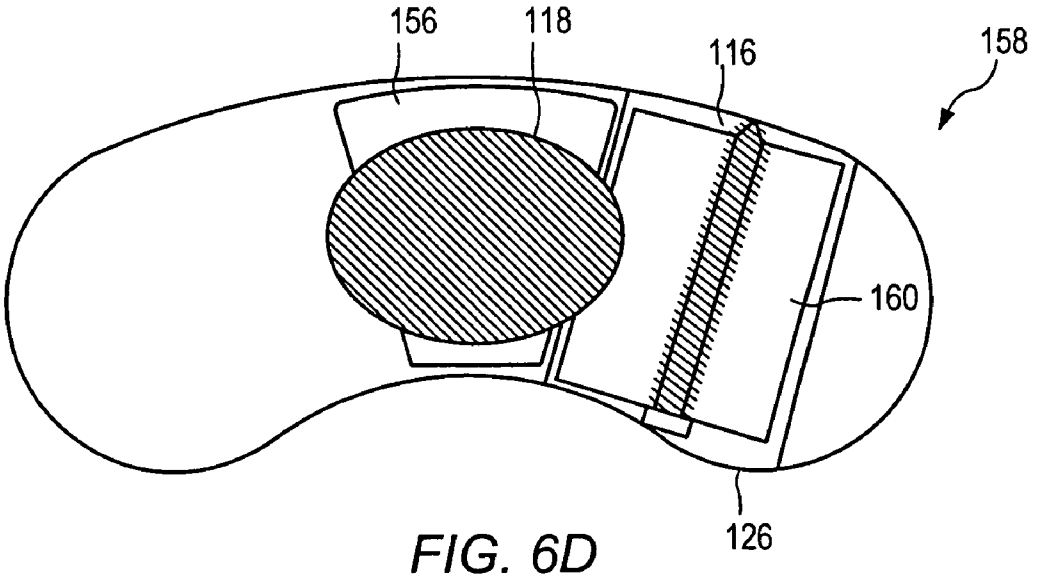

FIG. 6D

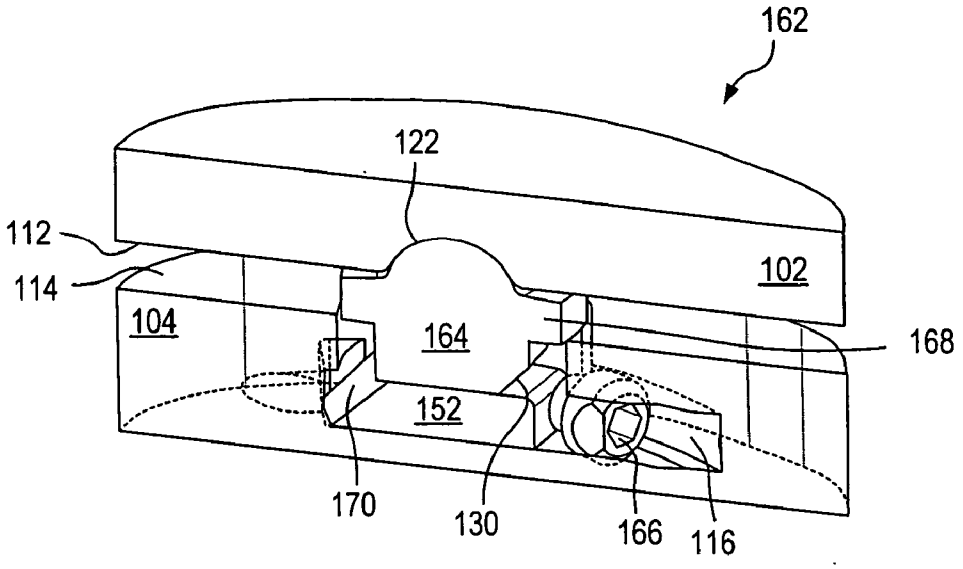
162
122
112
114
102
104
164
168
152
170
130
166
116

FIG. 7A

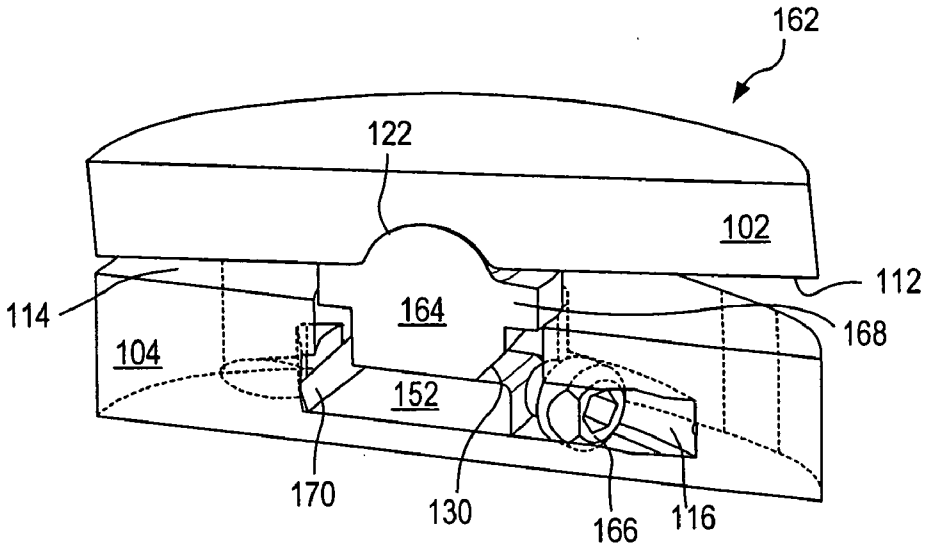
162
122
102
112
114
164
168
104
152
170
130
166
116

FIG. 7B

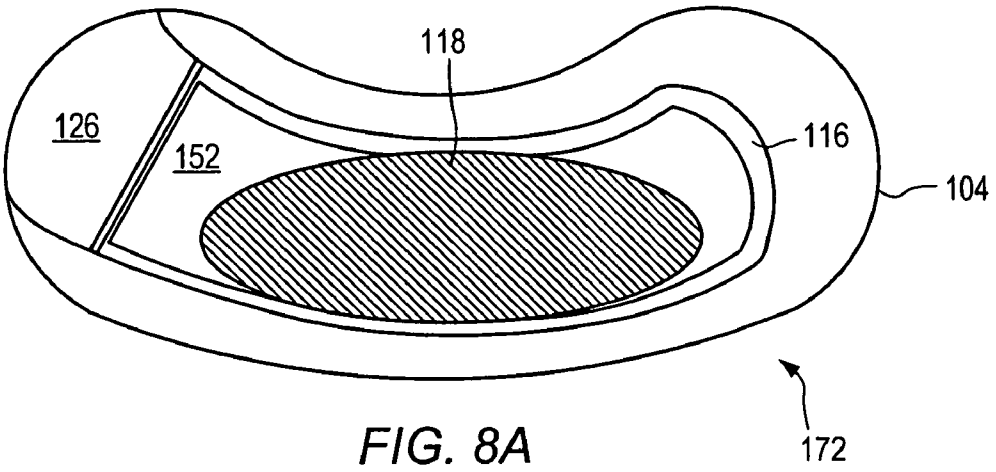

FIG. 8A

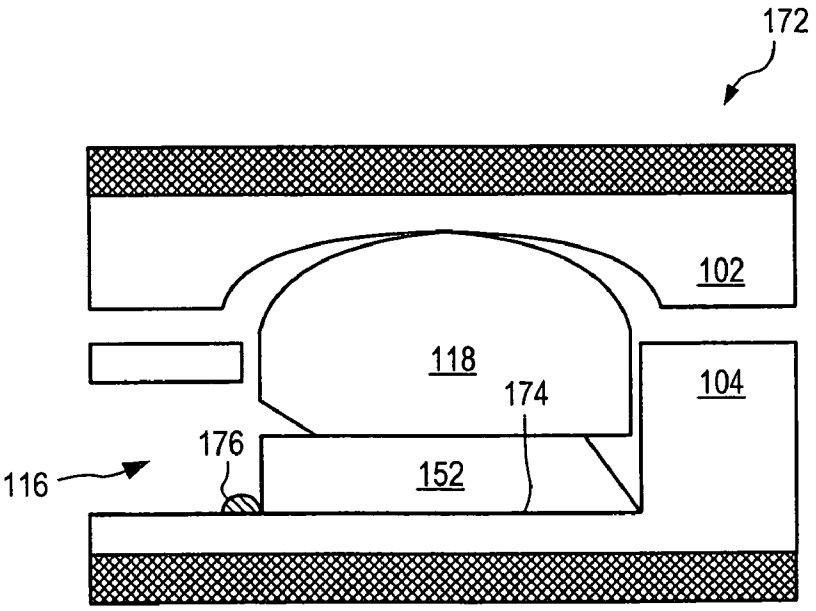

FIG. 8B

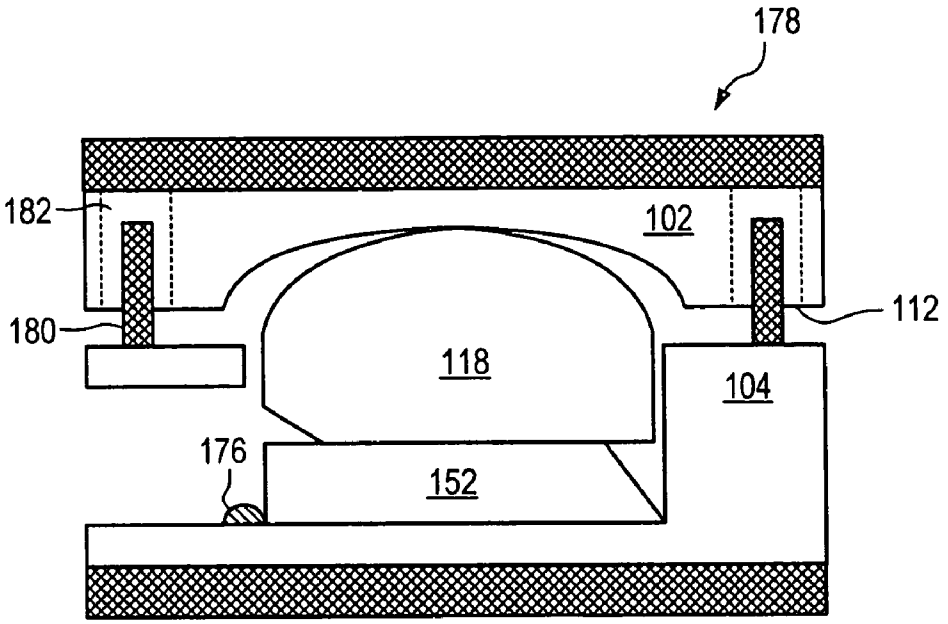
178
182
102
112
180
118
104
176
152

FIG. 8C

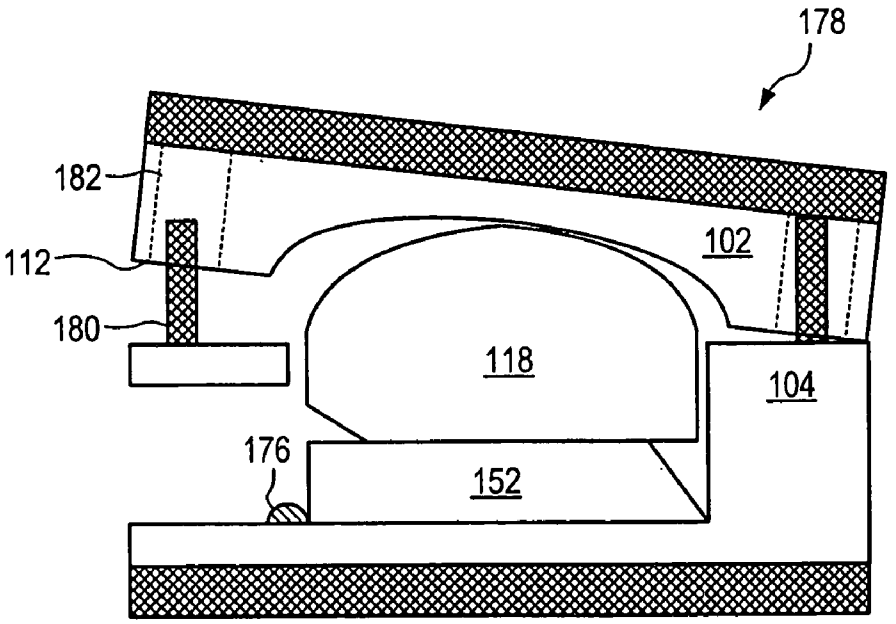
178
182
112
102
180
118
104
176
152

FIG. 8D

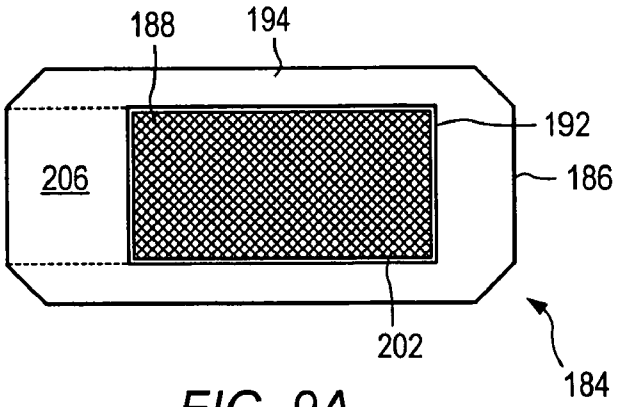

FIG. 9A

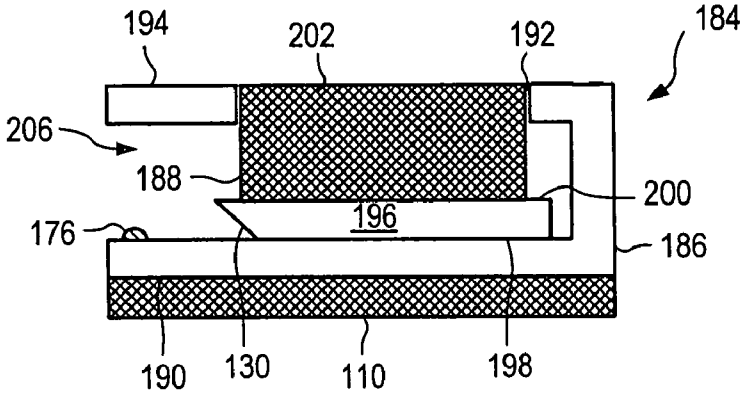

FIG. 9B

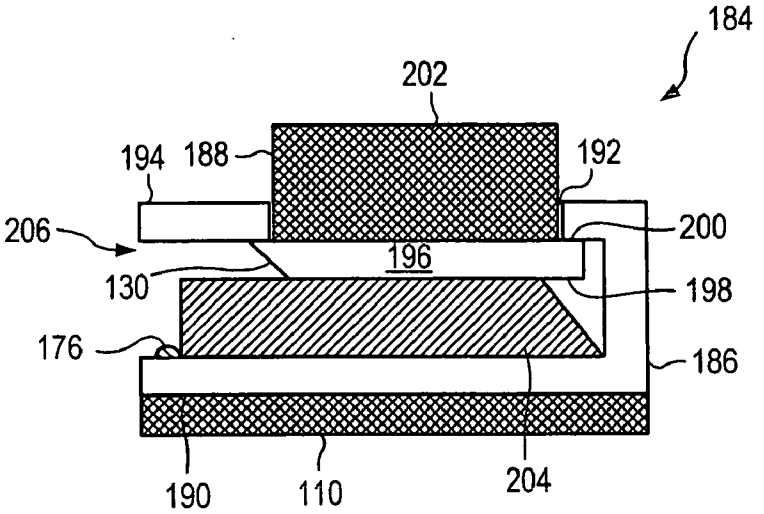

FIG. 9C

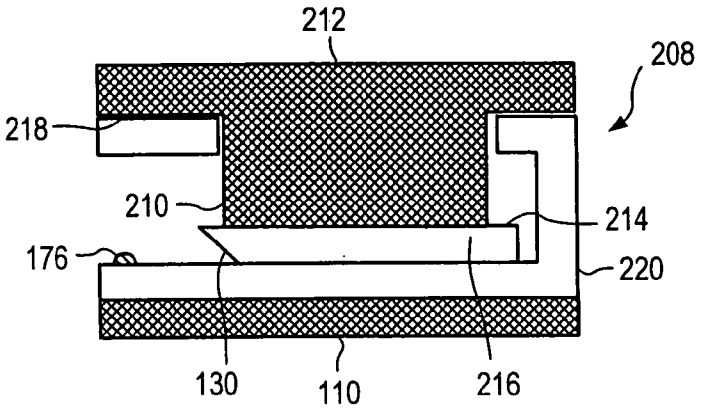

FIG. 9D

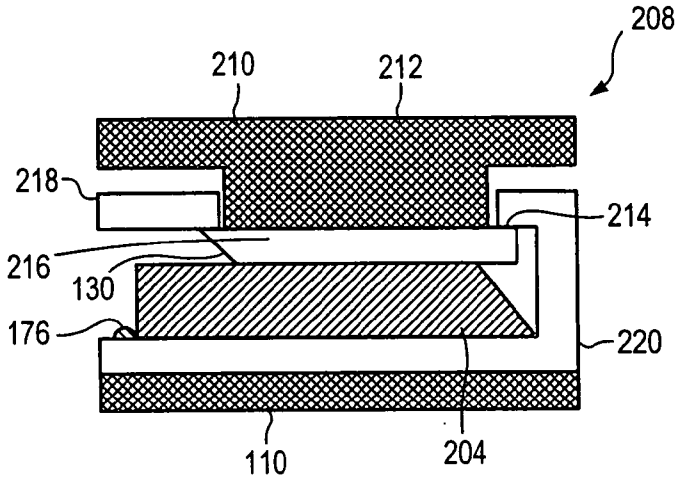

FIG. 9E

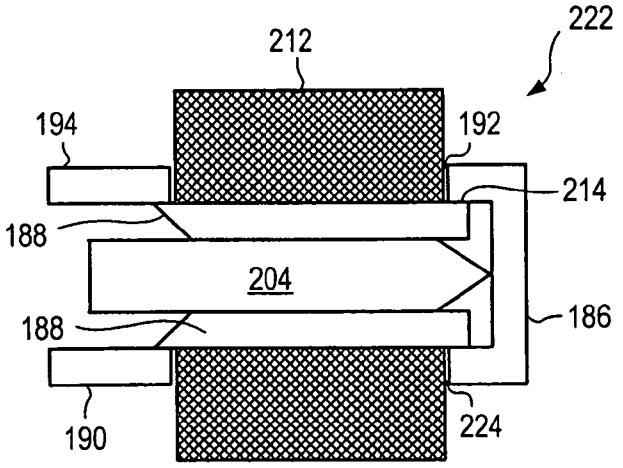

FIG. 9F

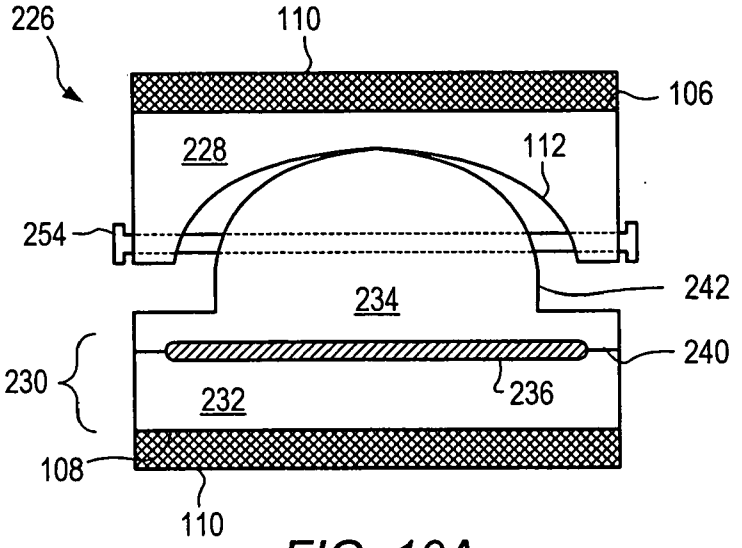

FIG. 10A

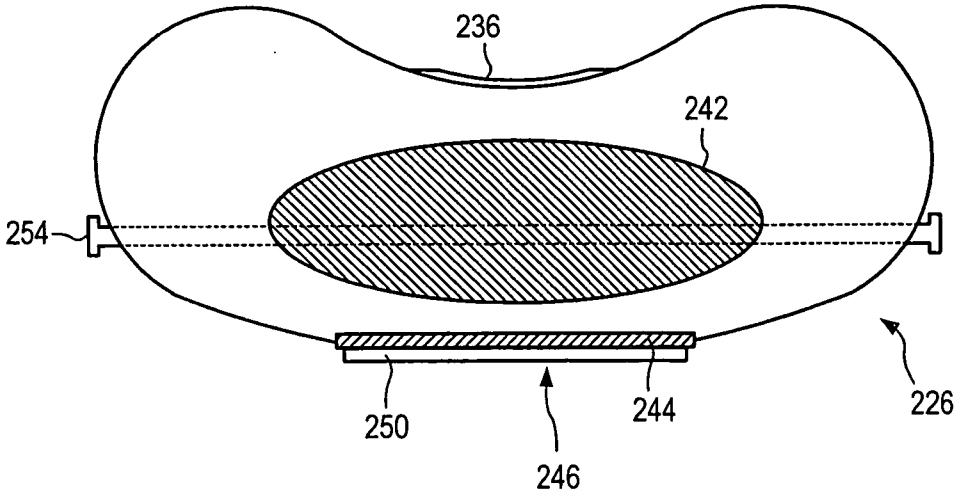

FIG. 10B

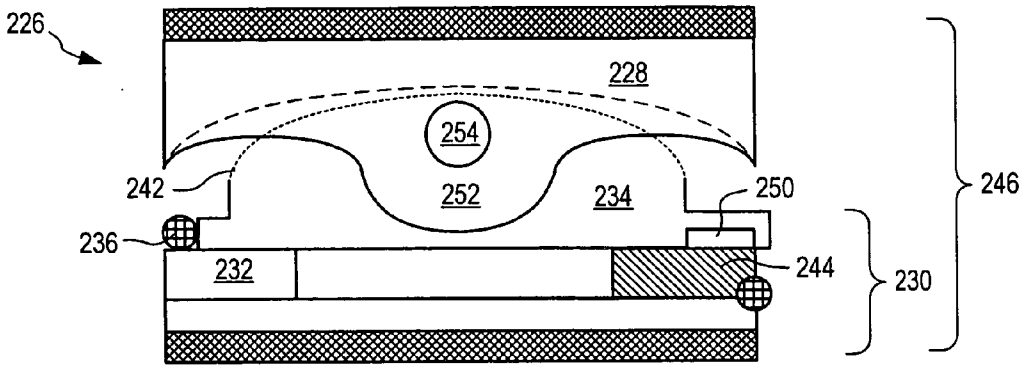

FIG. 11A

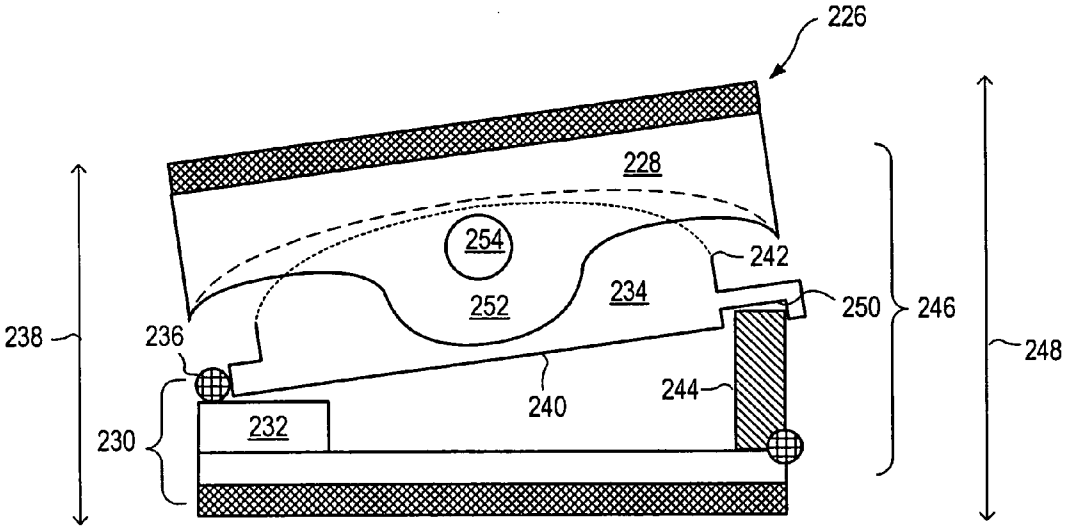

FIG. 11B

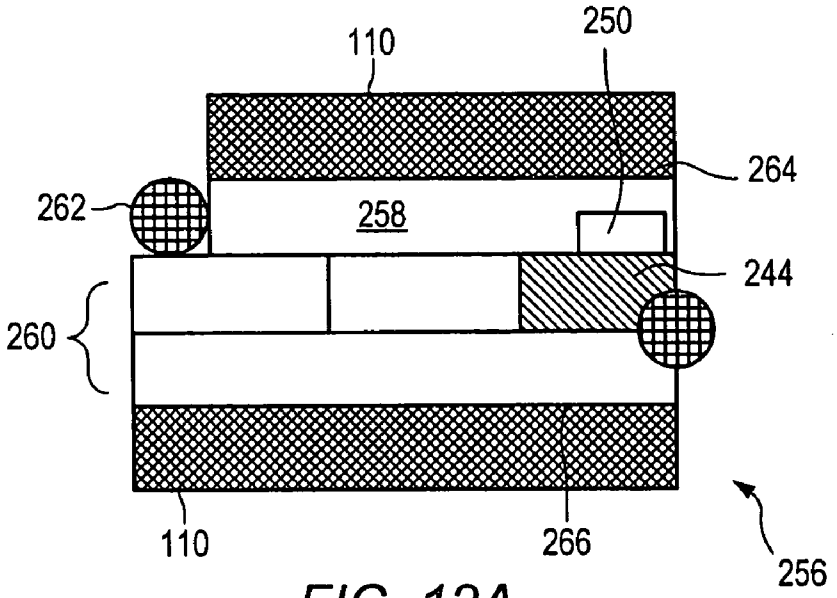

FIG. 12A

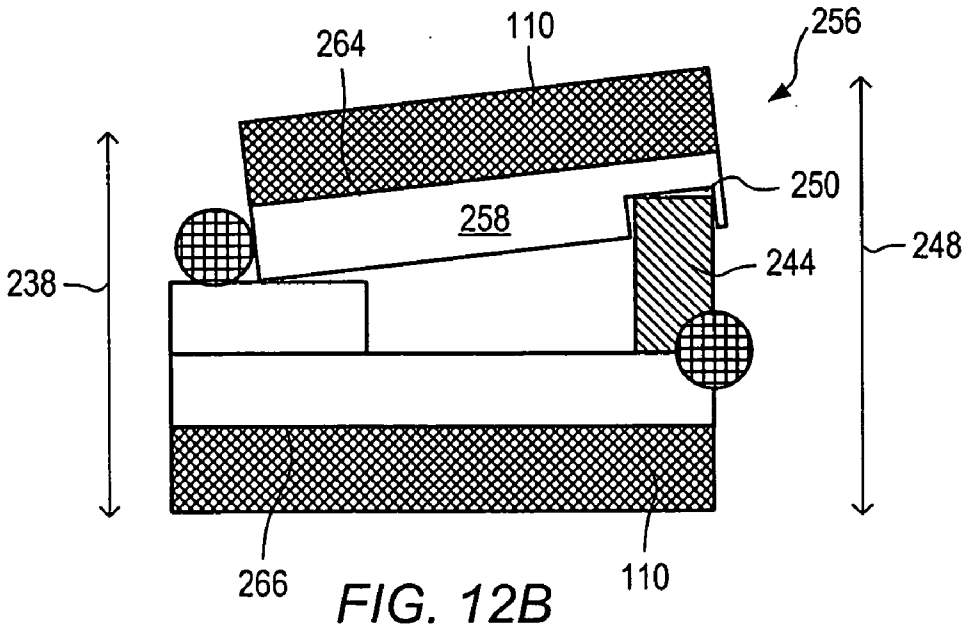

FIG. 12B

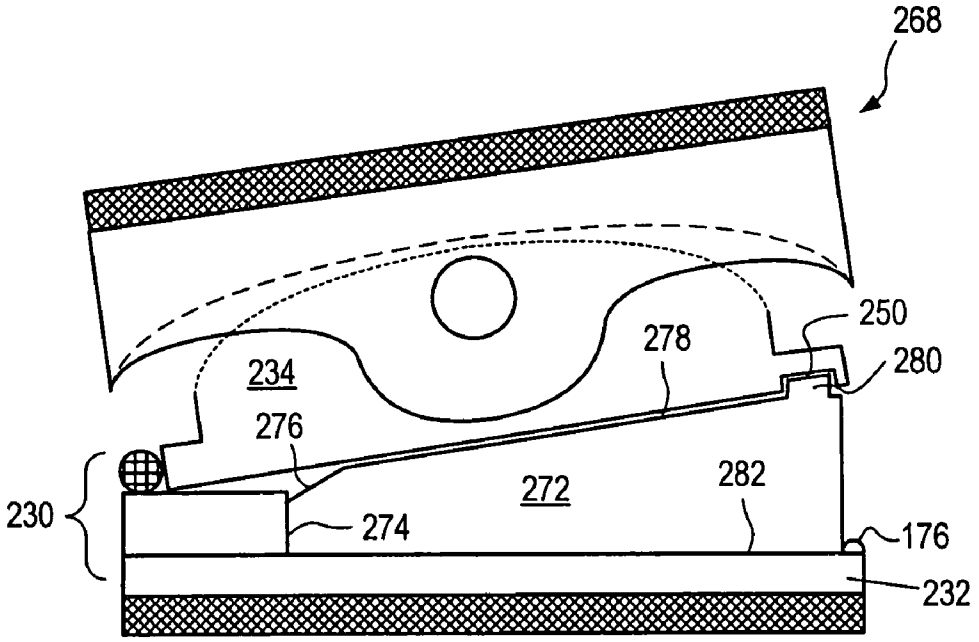

FIG. 13A

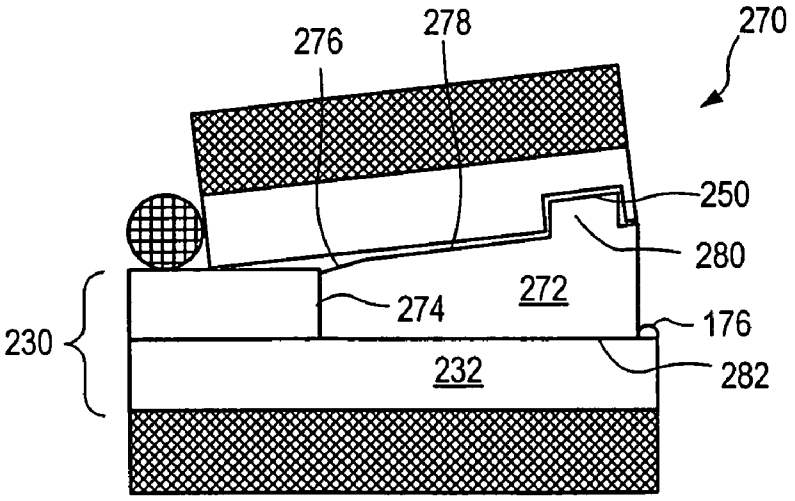

FIG. 13B

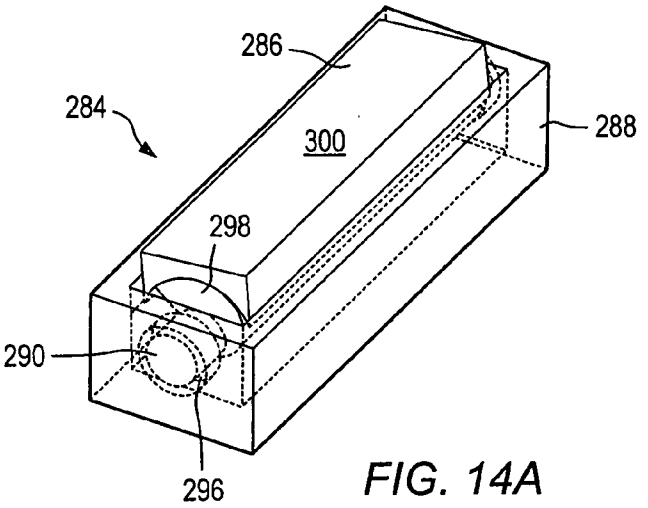

FIG. 14A

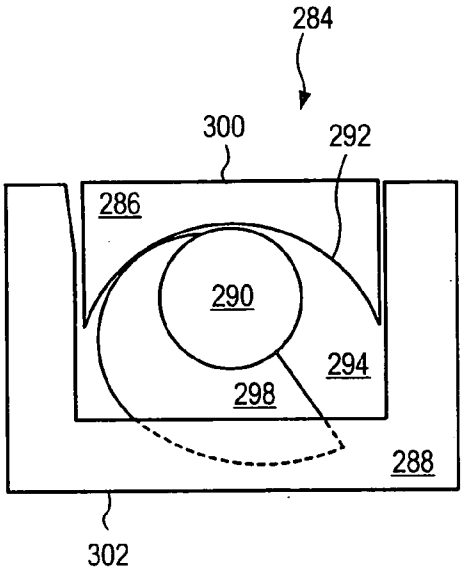

FIG. 14B

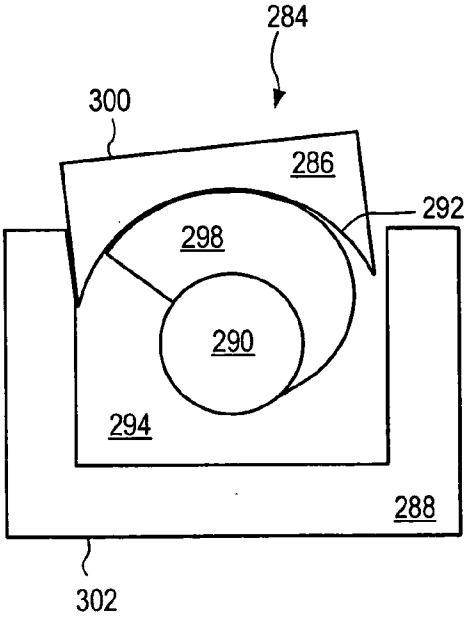

FIG. 14C

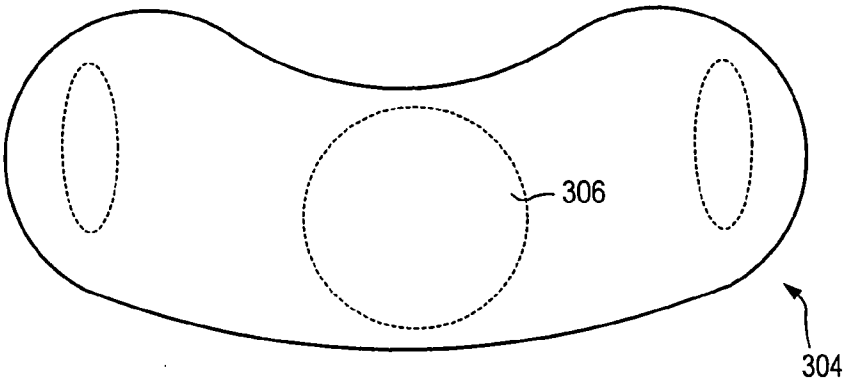

FIG. 15A

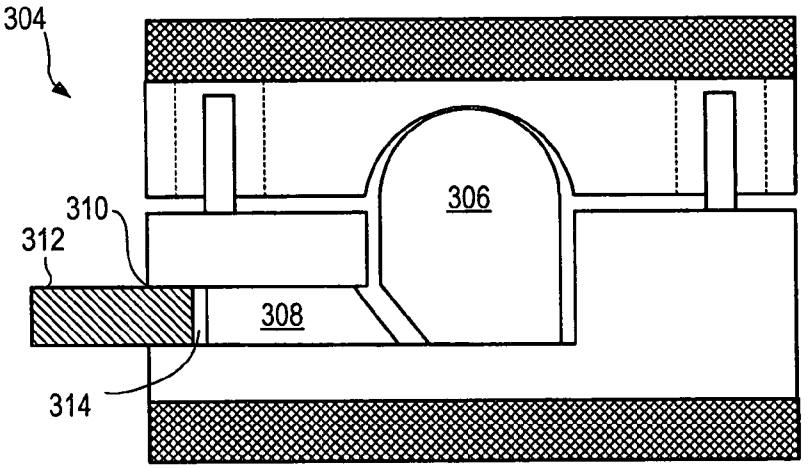

FIG. 15B

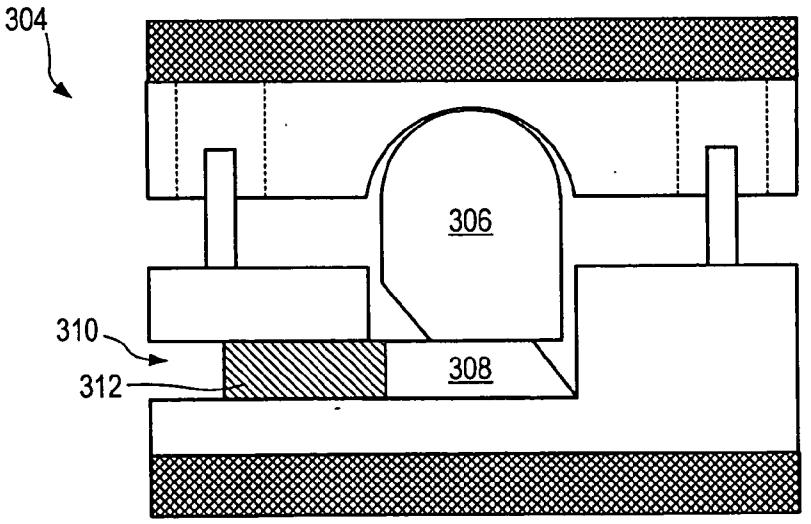

FIG. 15C

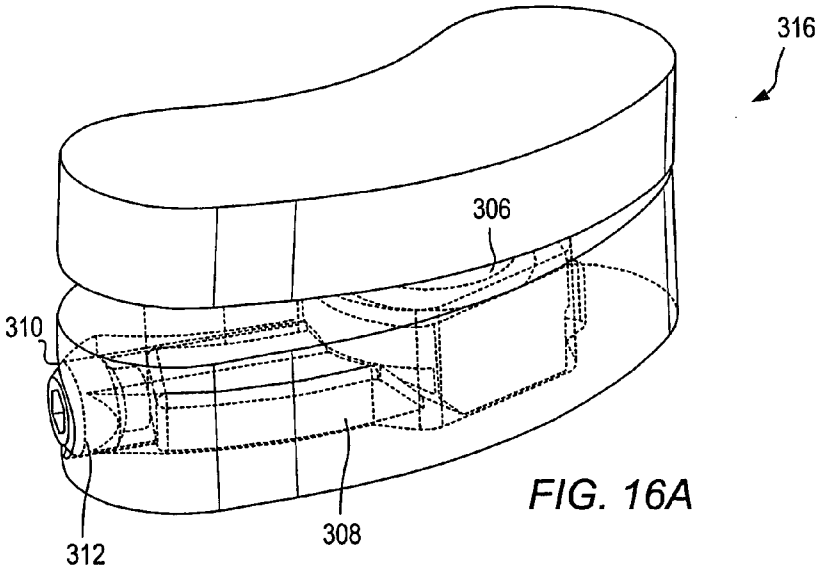

FIG. 16A

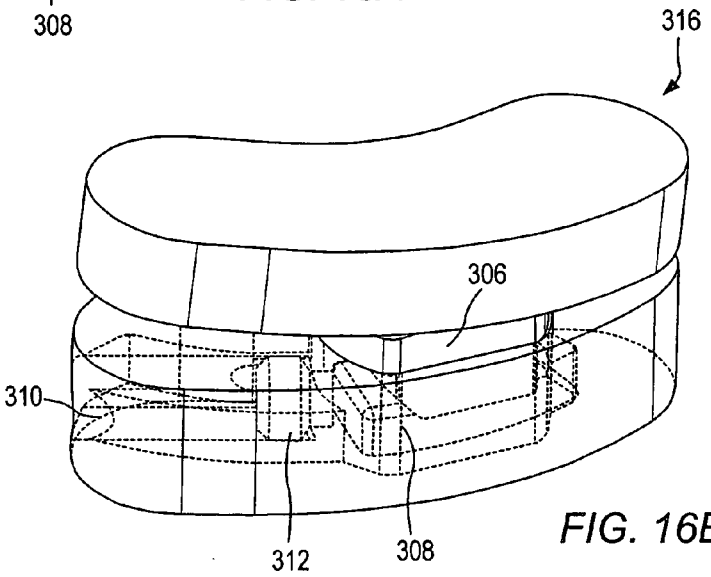

FIG. 16B

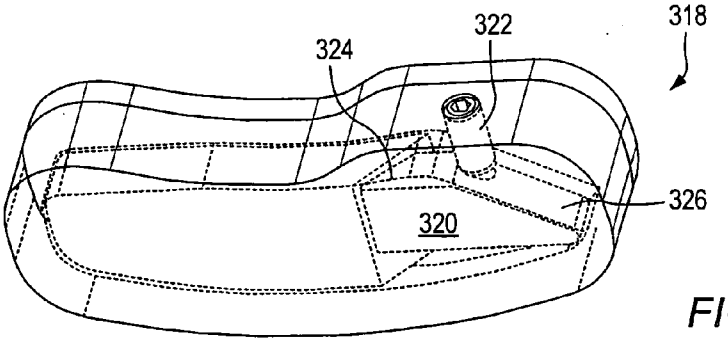

FIG. 17

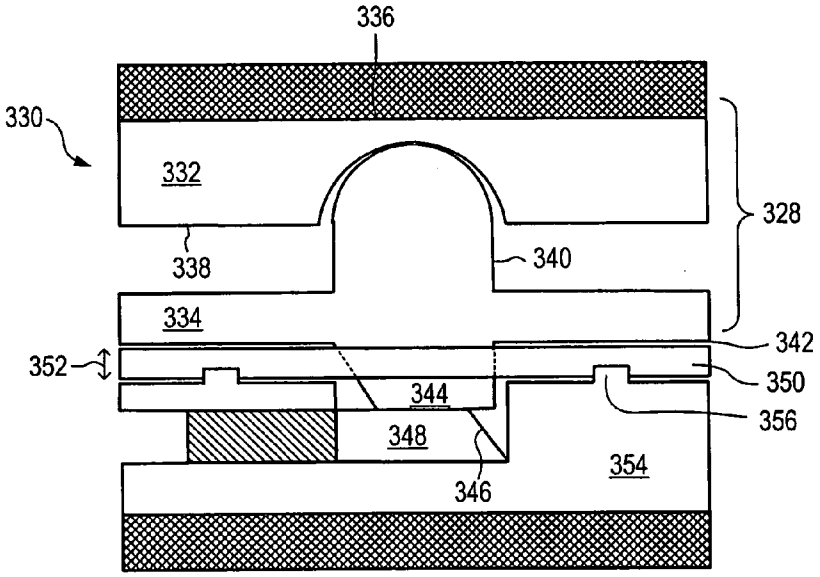

FIG. 18A

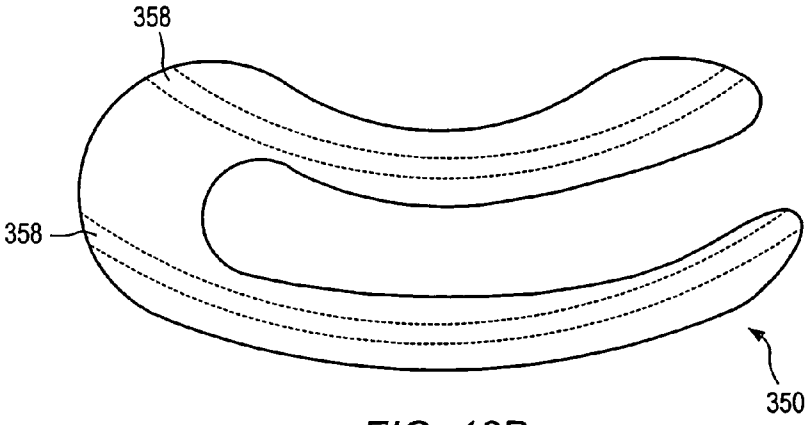

FIG. 18B

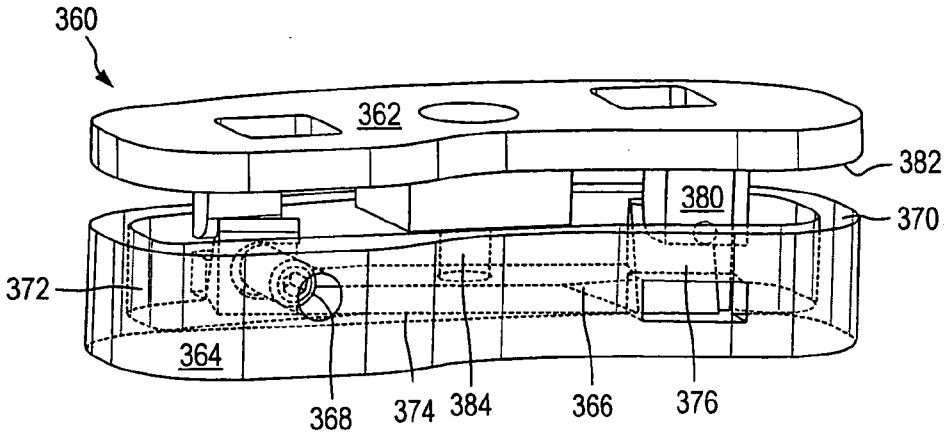

FIG. 19A

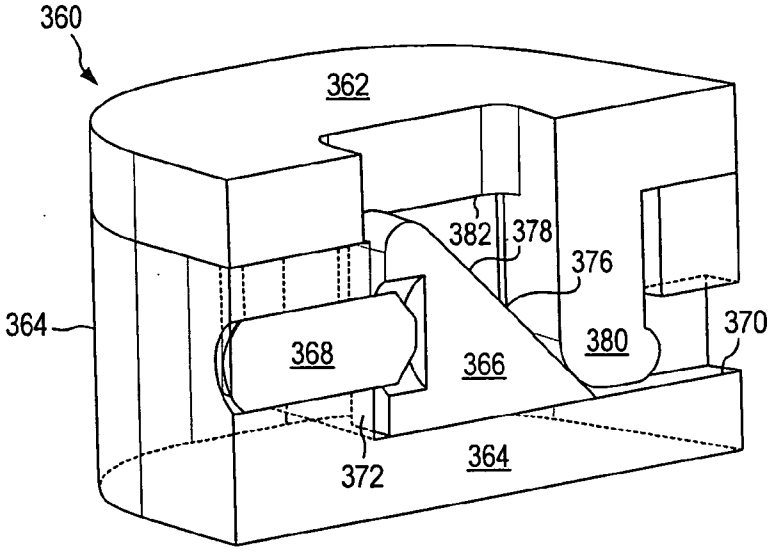

FIG. 19B

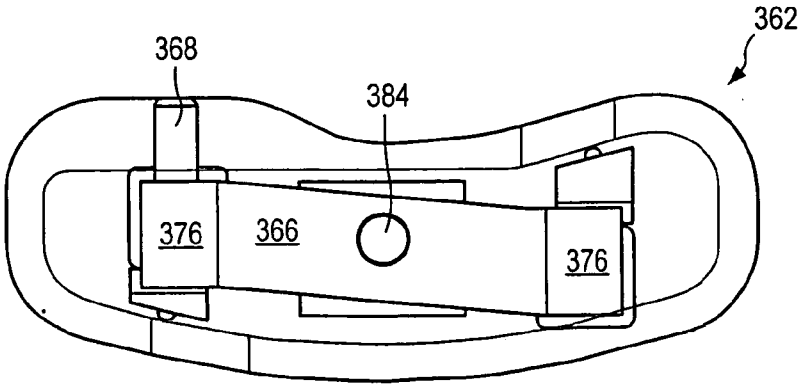

FIG. 19C

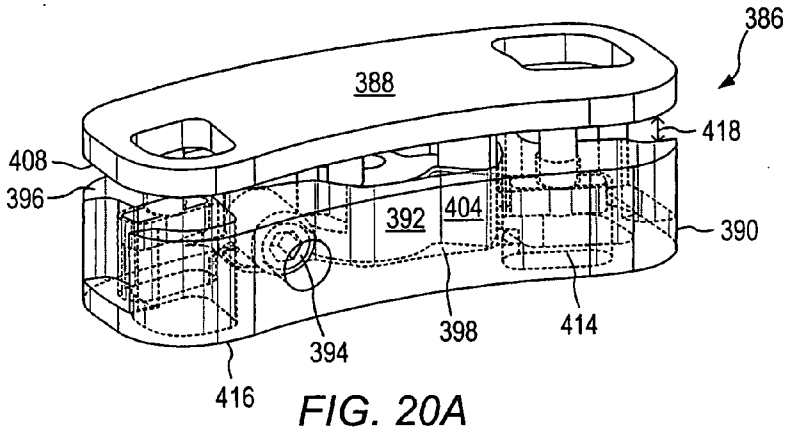

FIG. 20A

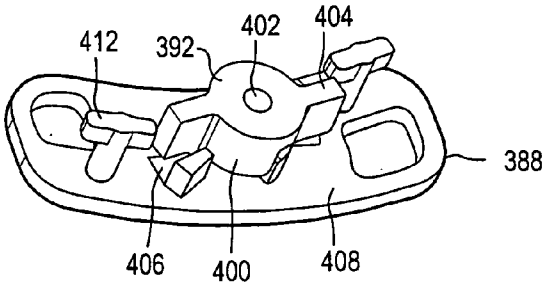

FIG. 20B

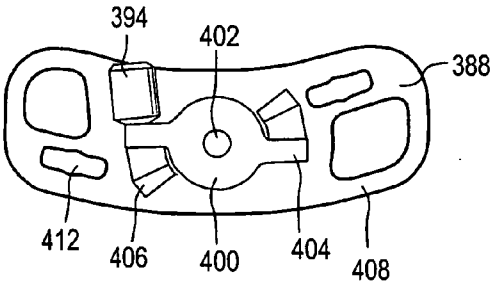

FIG. 20C

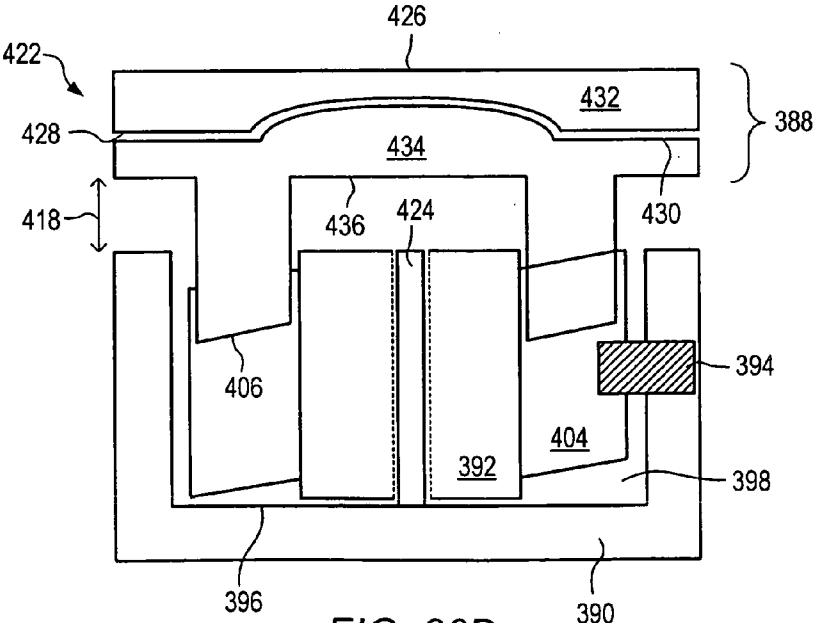

FIG. 20D

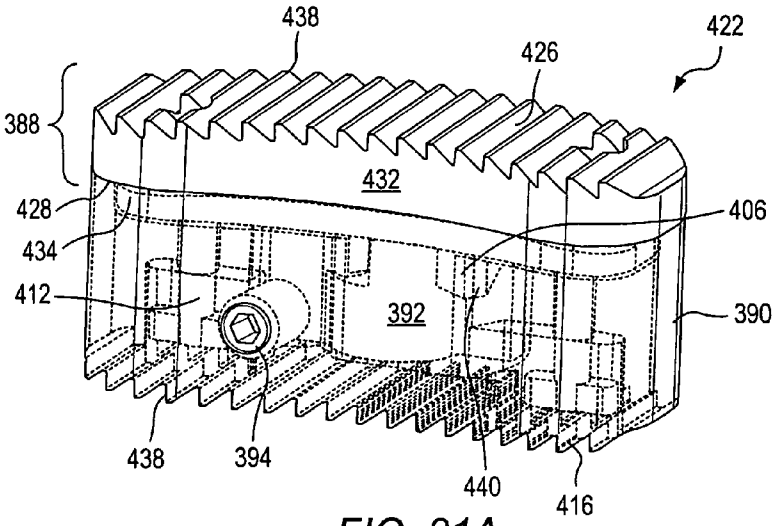

FIG. 21A

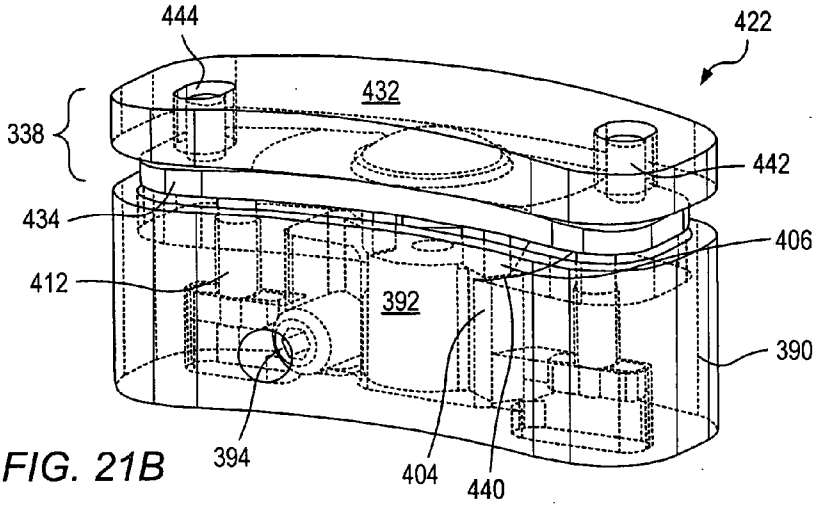

FIG. 21B

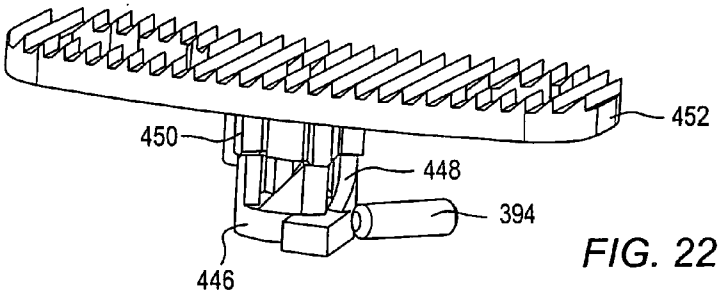

FIG. 22

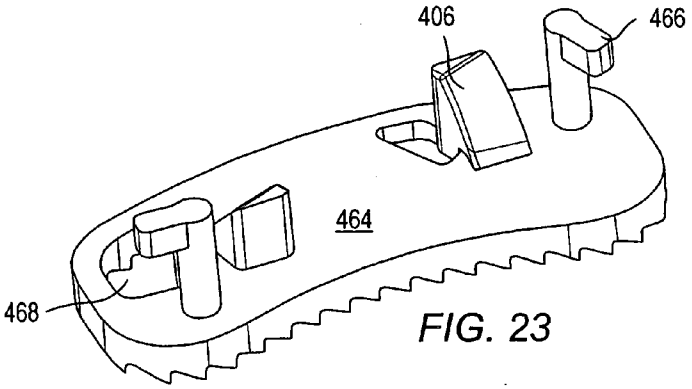

FIG. 23

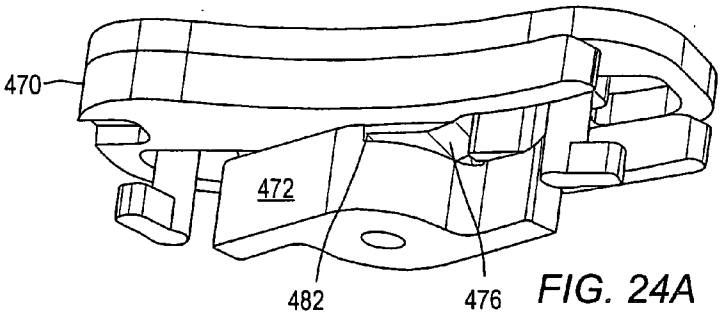

FIG. 24A

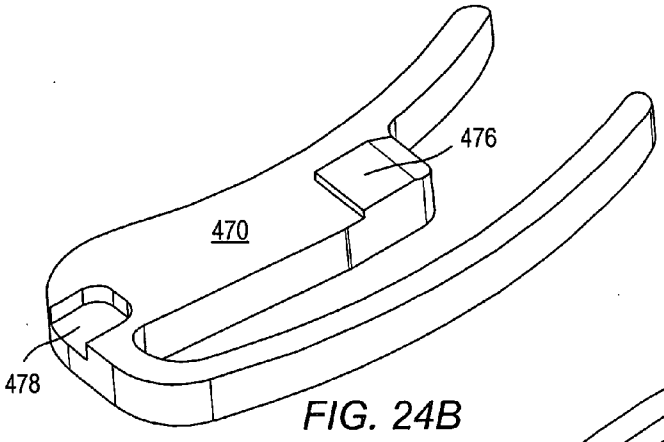

FIG. 24B

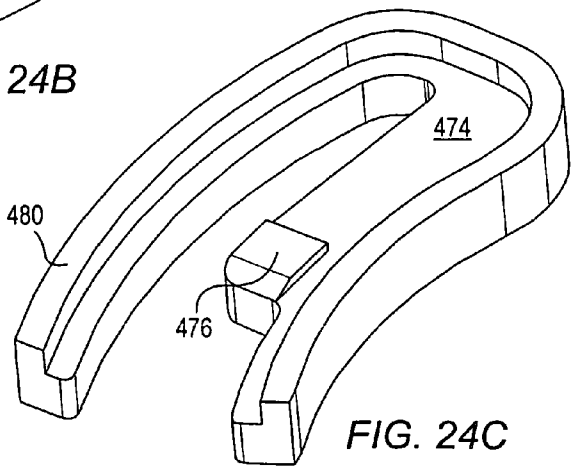

FIG. 24C

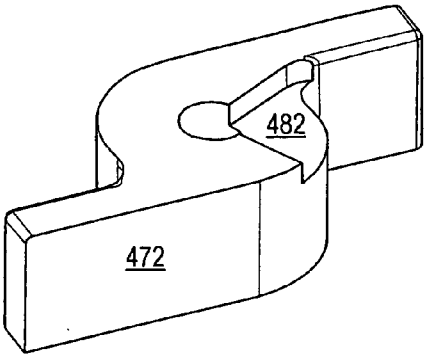

FIG. 24D

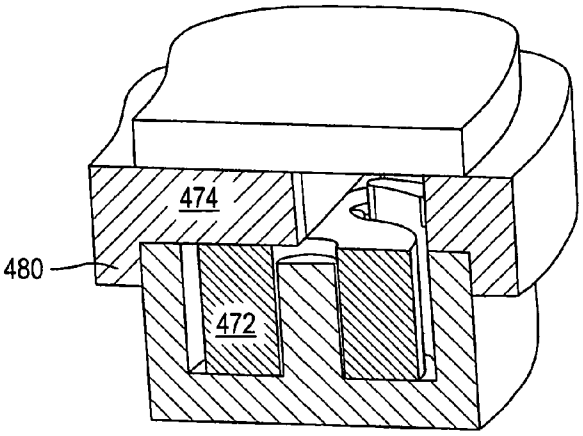

FIG. 24E

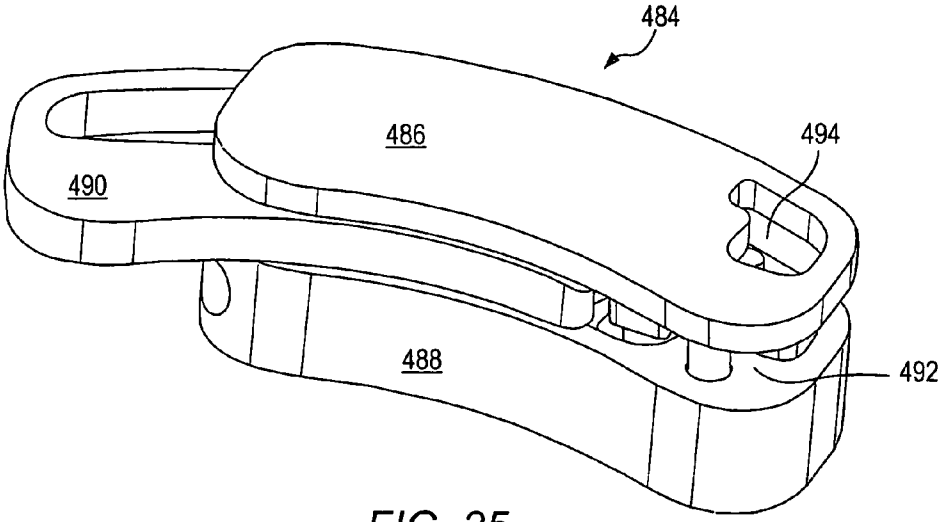

FIG. 25

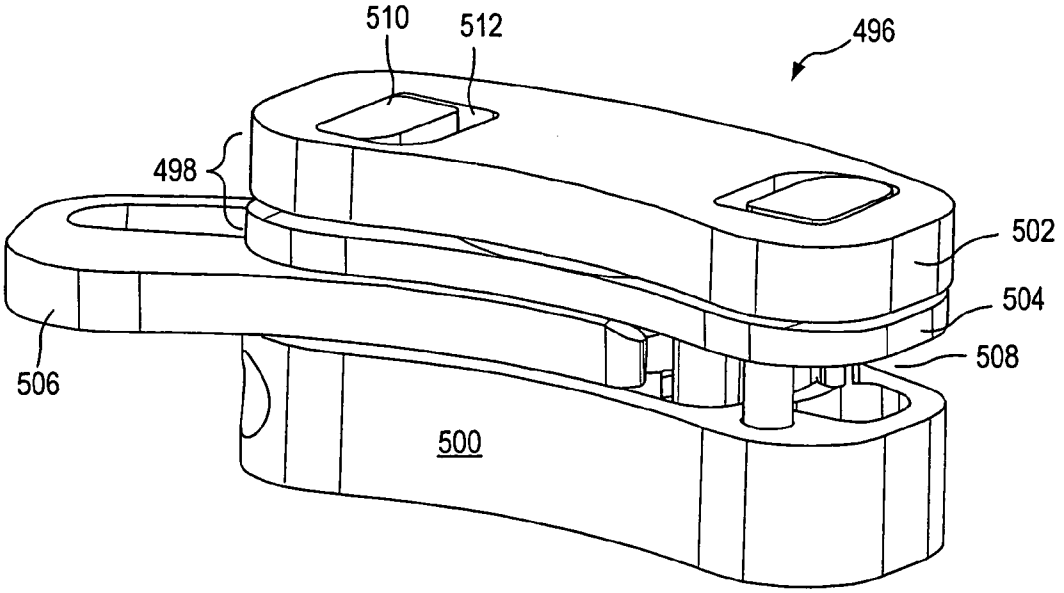

FIG. 26A

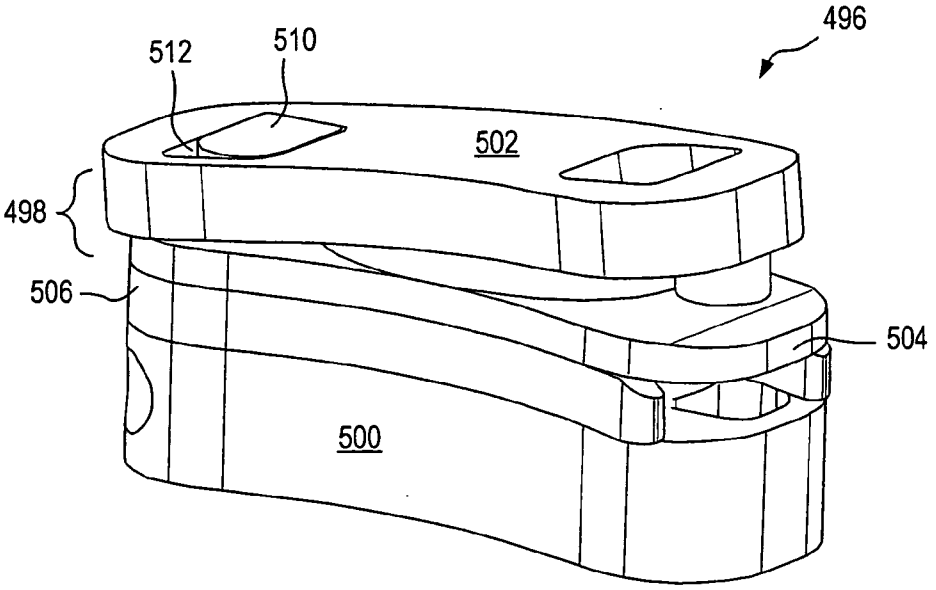

FIG. 26B

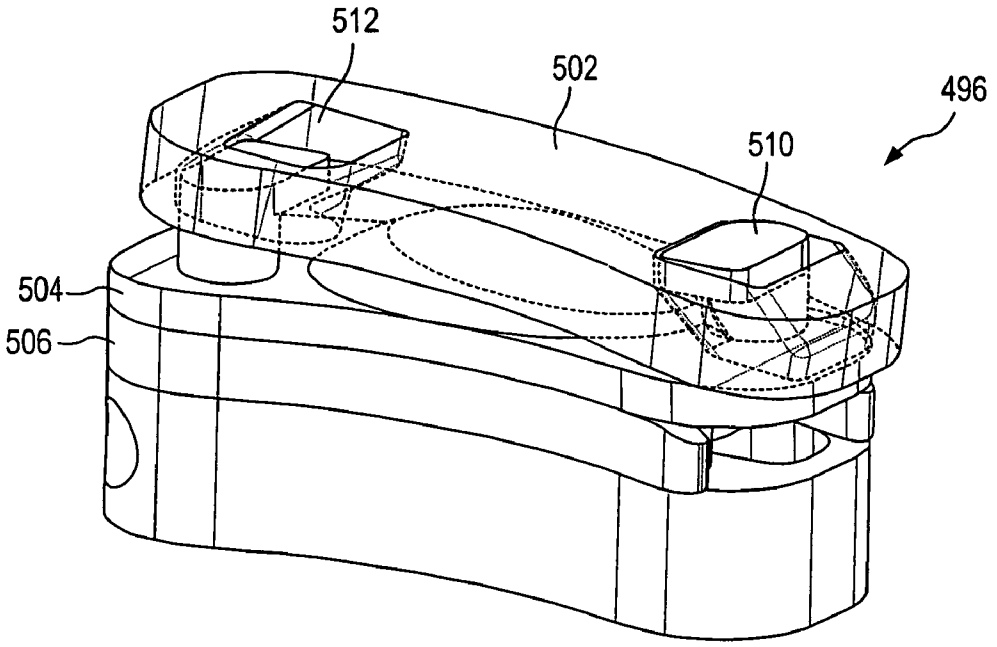

FIG. 26C

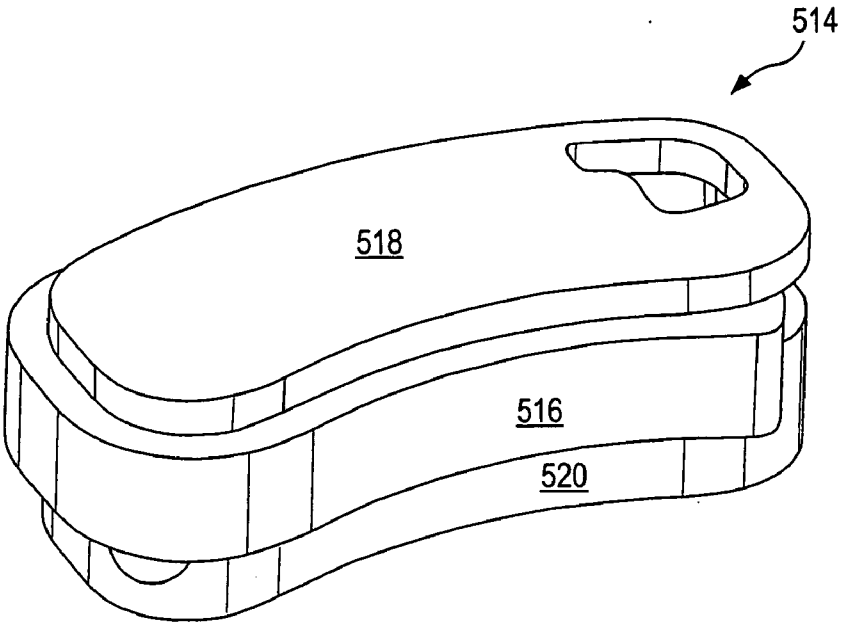

FIG. 27

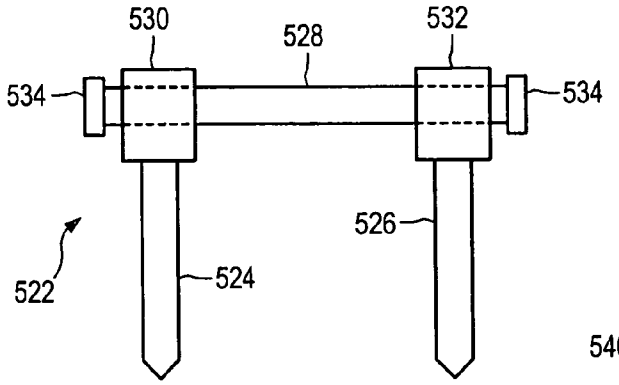

FIG. 28A

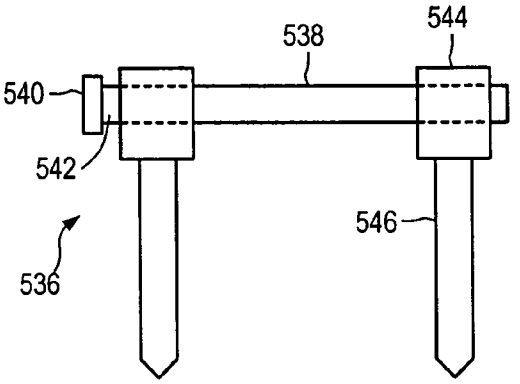

FIG. 28B

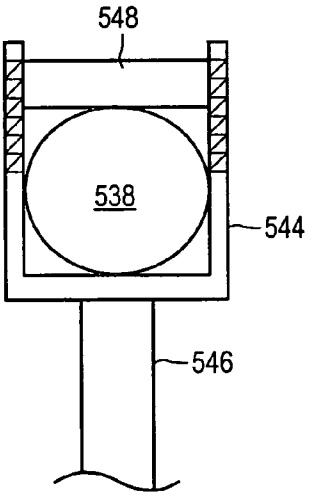

FIG. 28C

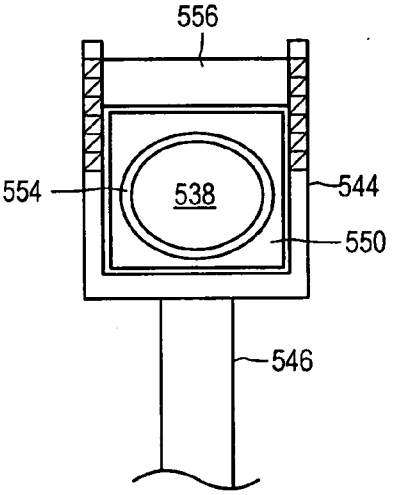

FIG. 28D

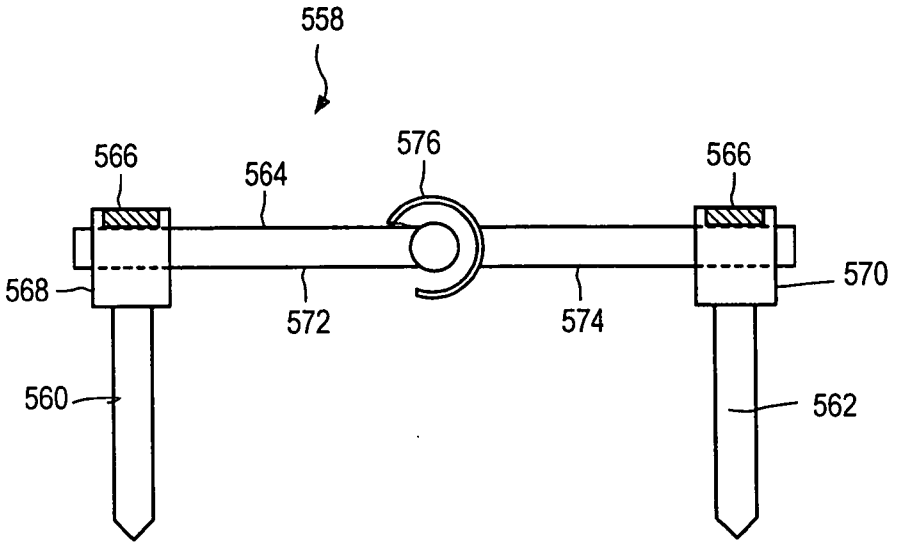

FIG. 29A

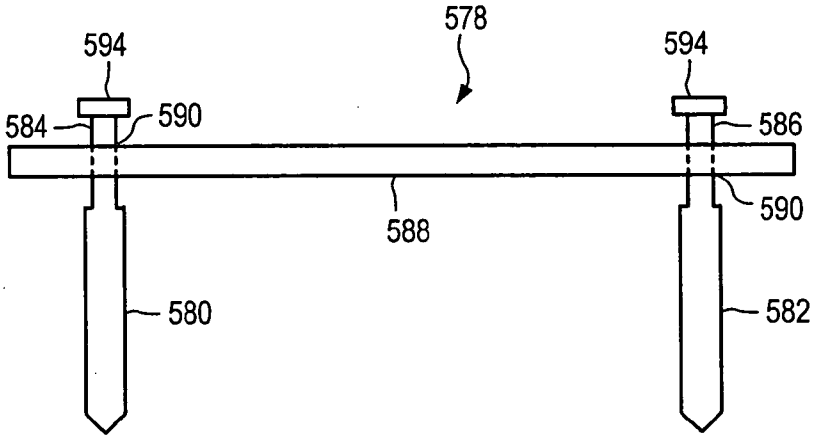

FIG. 29B

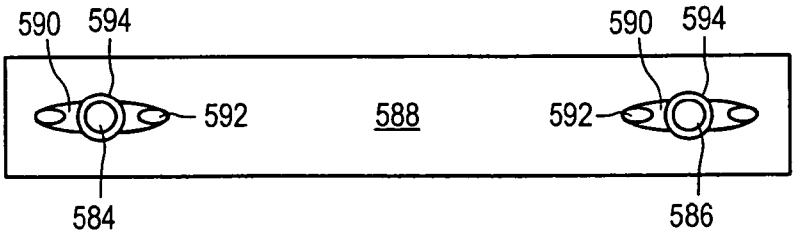

FIG. 29C

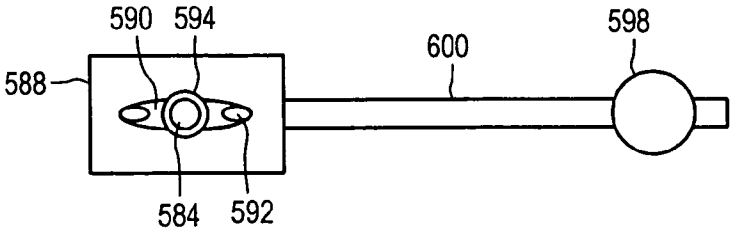

FIG. 29D

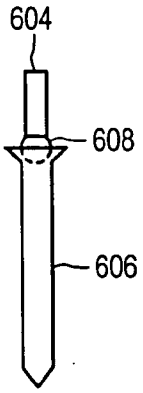

FIG. 29E

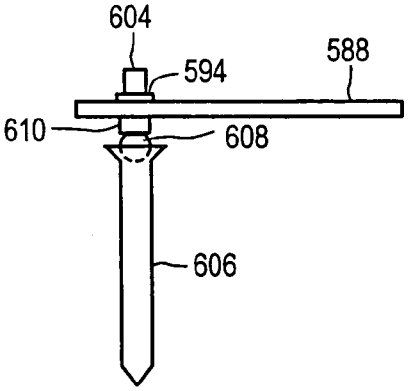

FIG. 29F

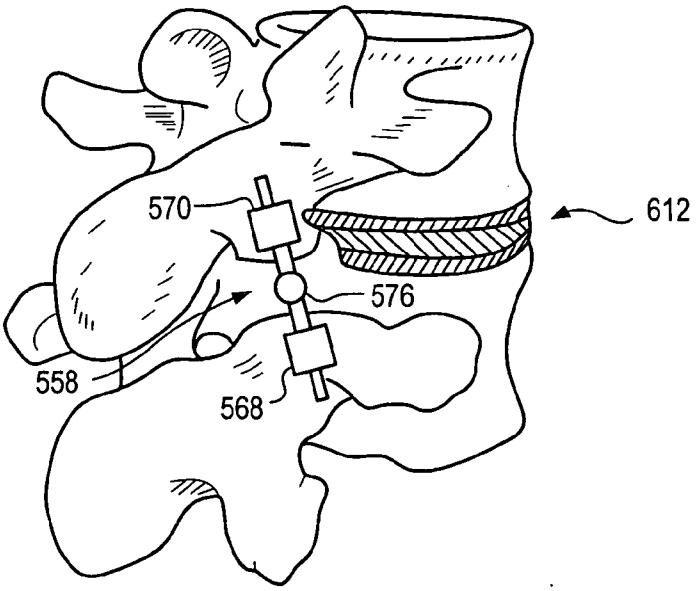

FIG. 30

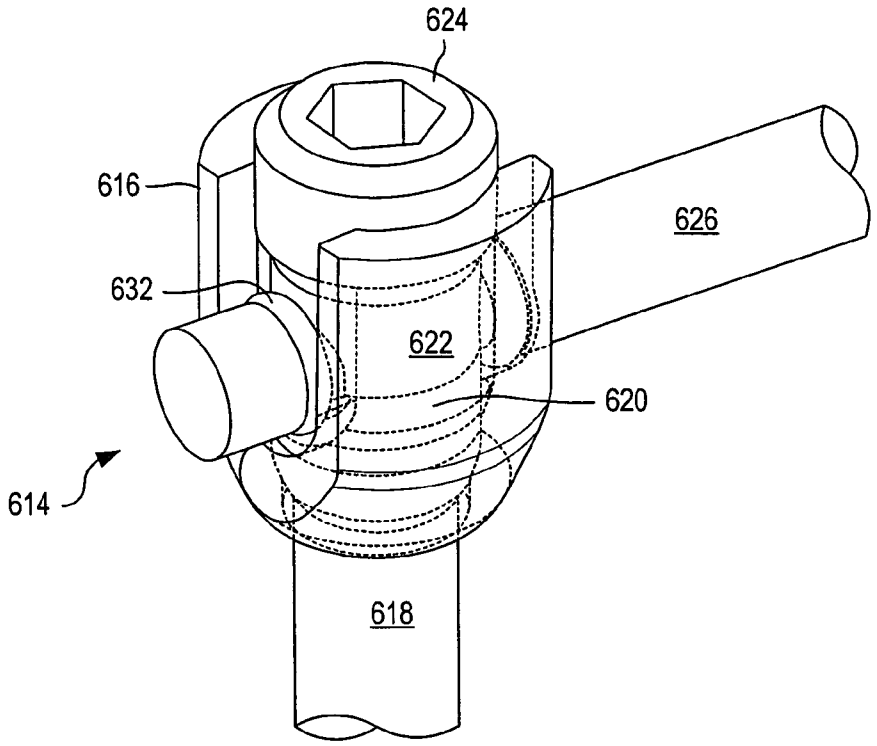

FIG. 31A

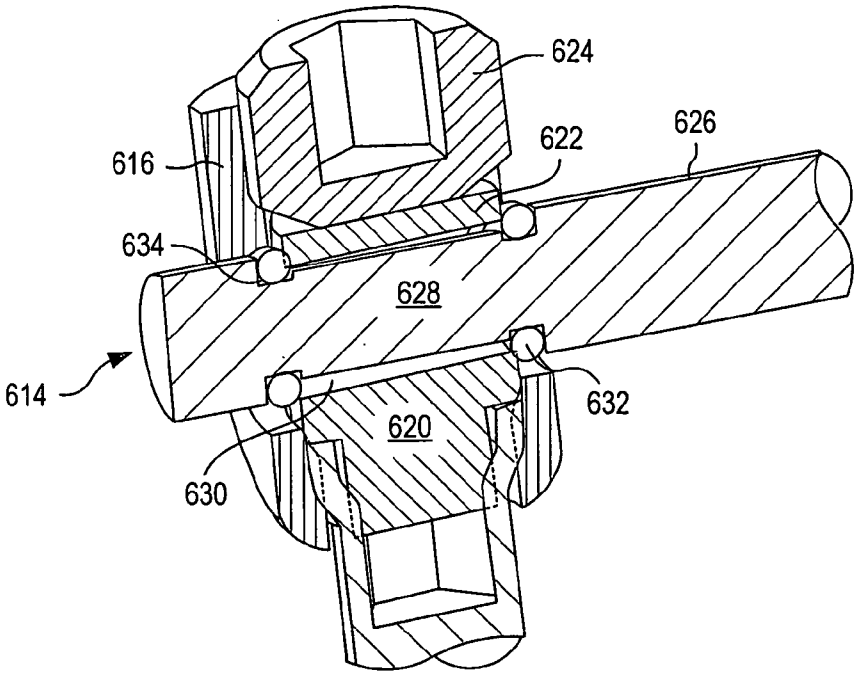

FIG. 31B

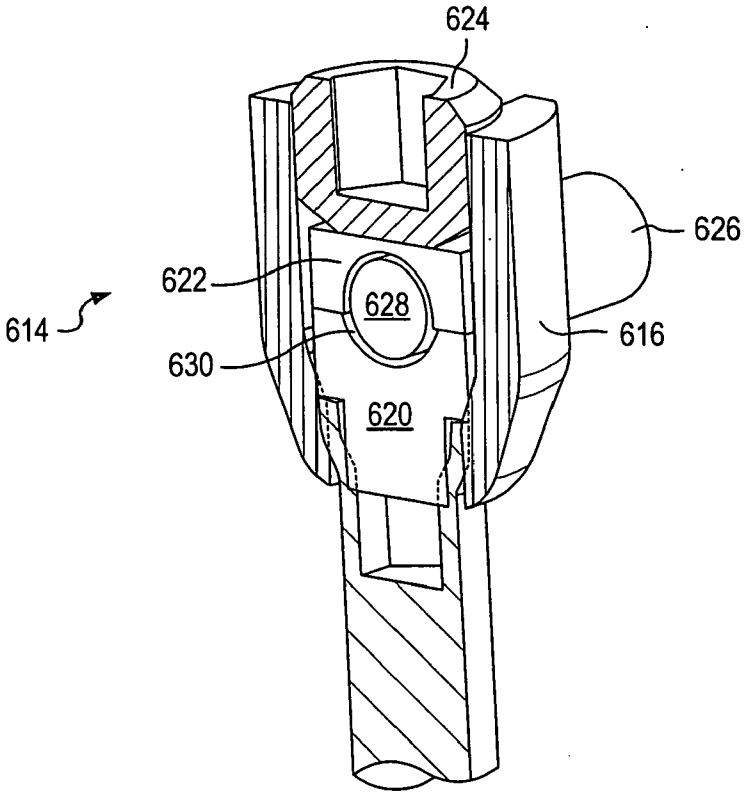

FIG. 31C

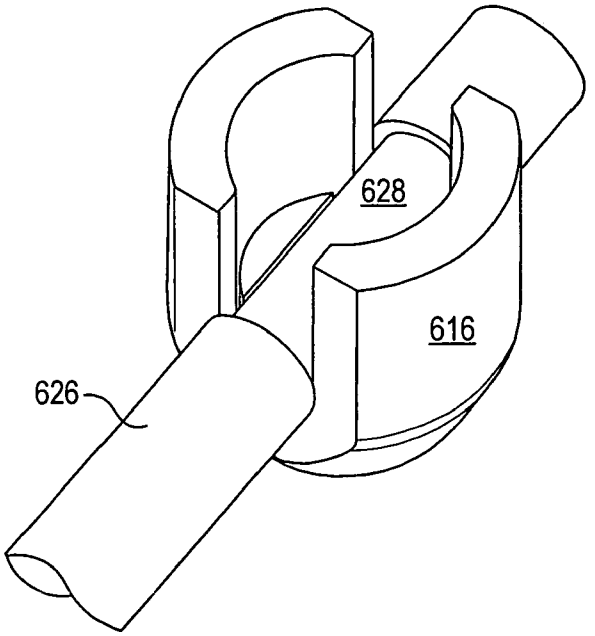

FIG. 31D

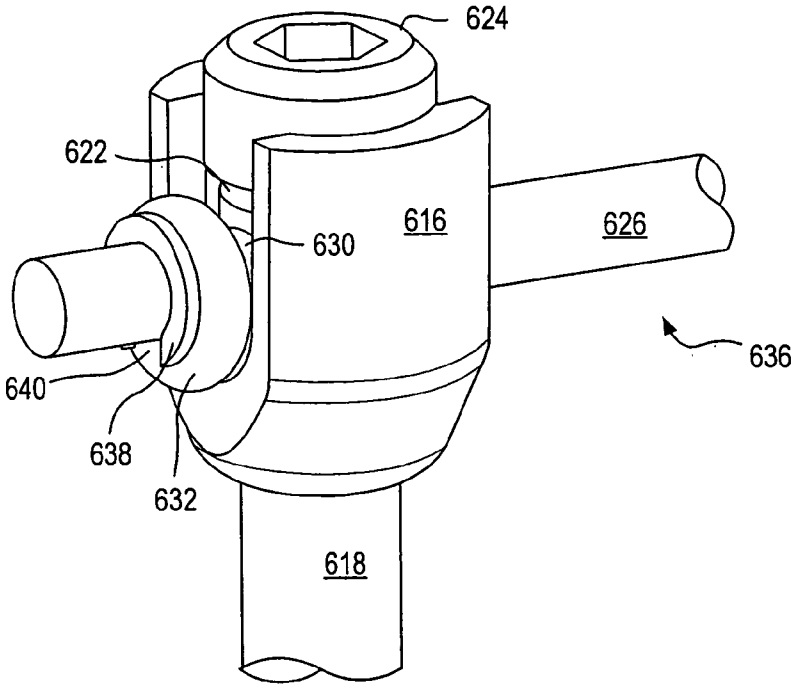

FIG. 32

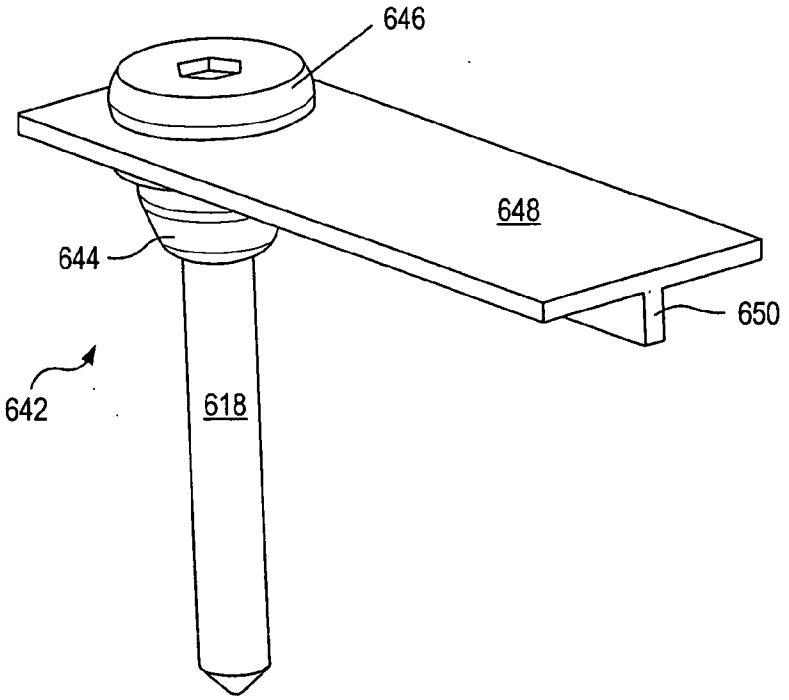

FIG. 33A

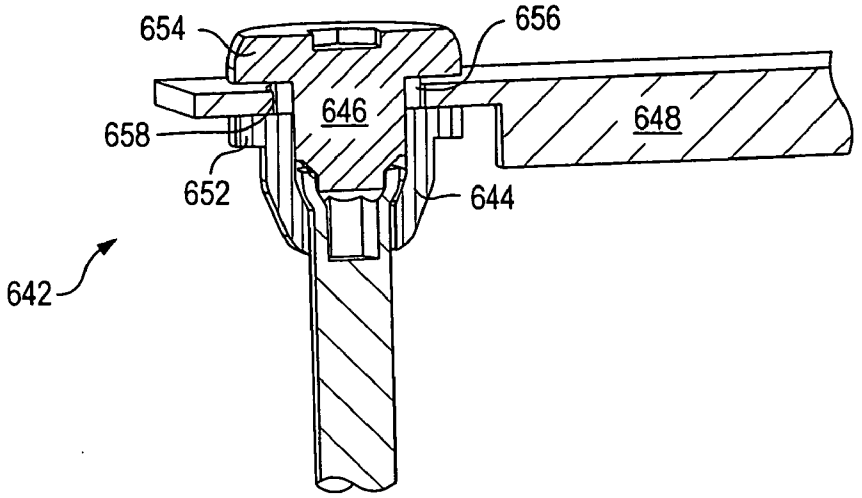

FIG. 33B

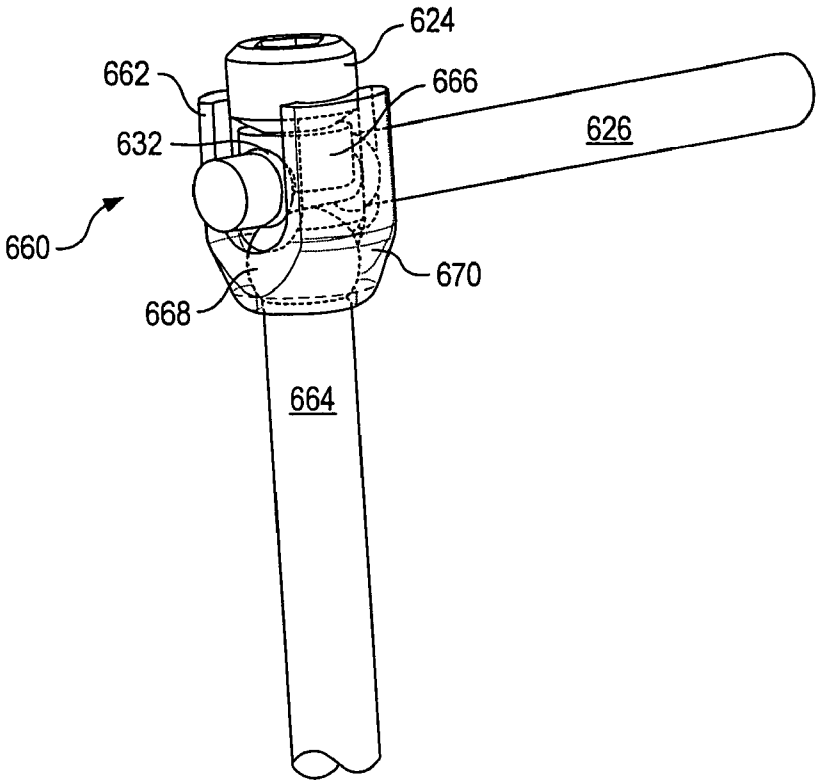

FIG. 34A

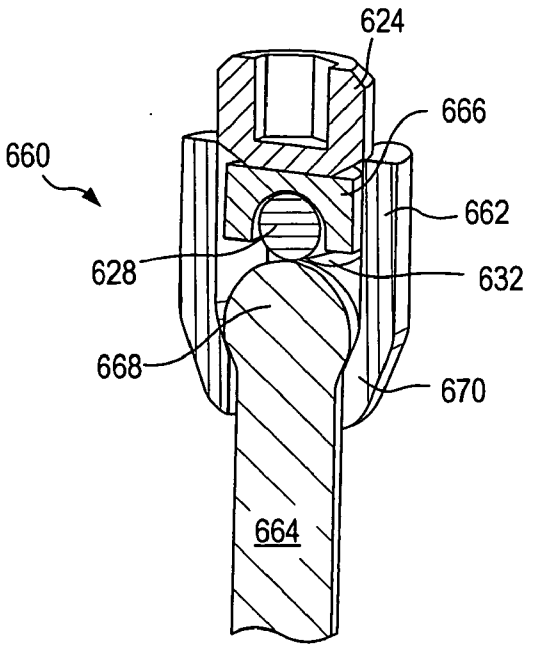

FIG. 34B

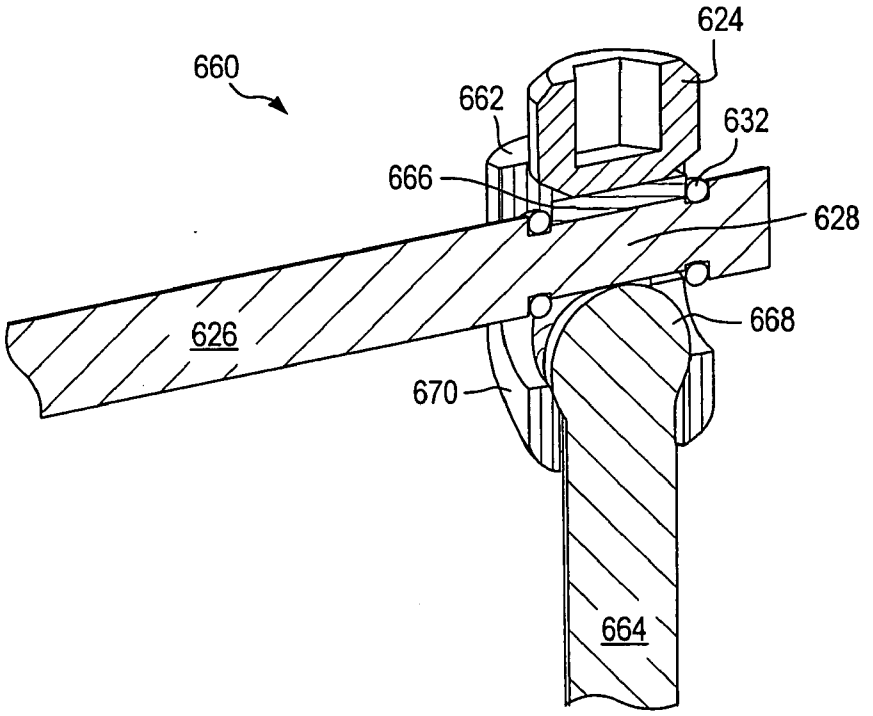

FIG. 34C

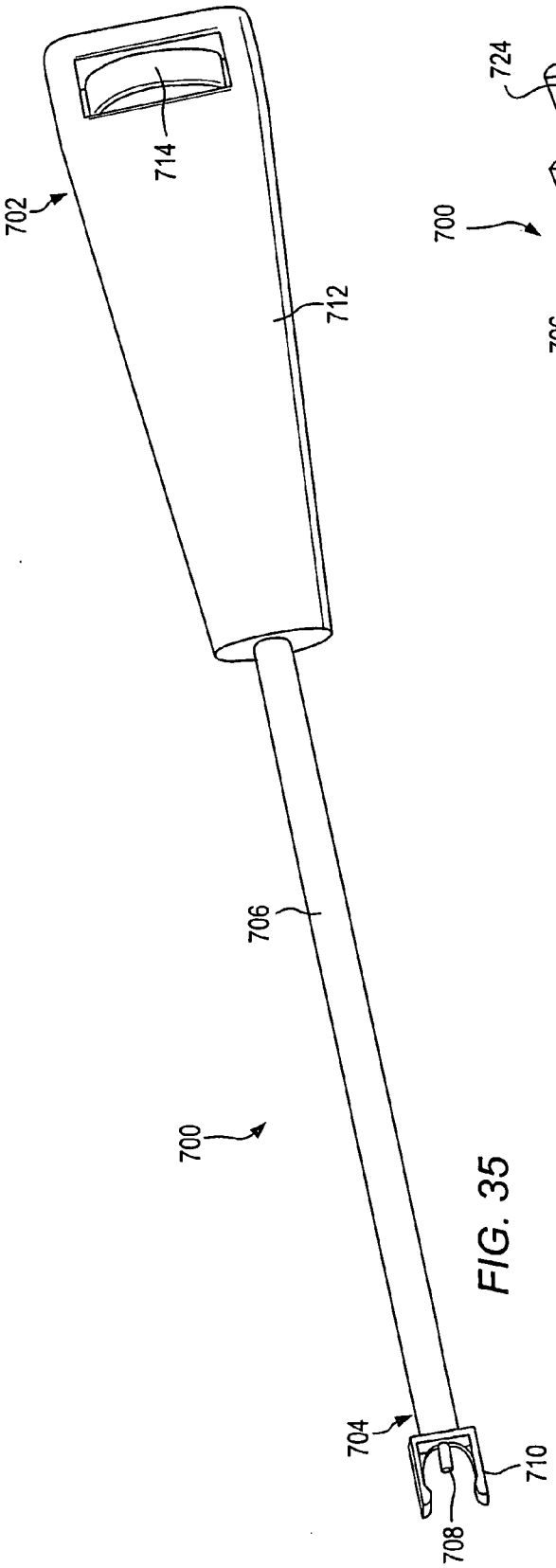
702
714
712
706
700
704
710
708

FIG. 35

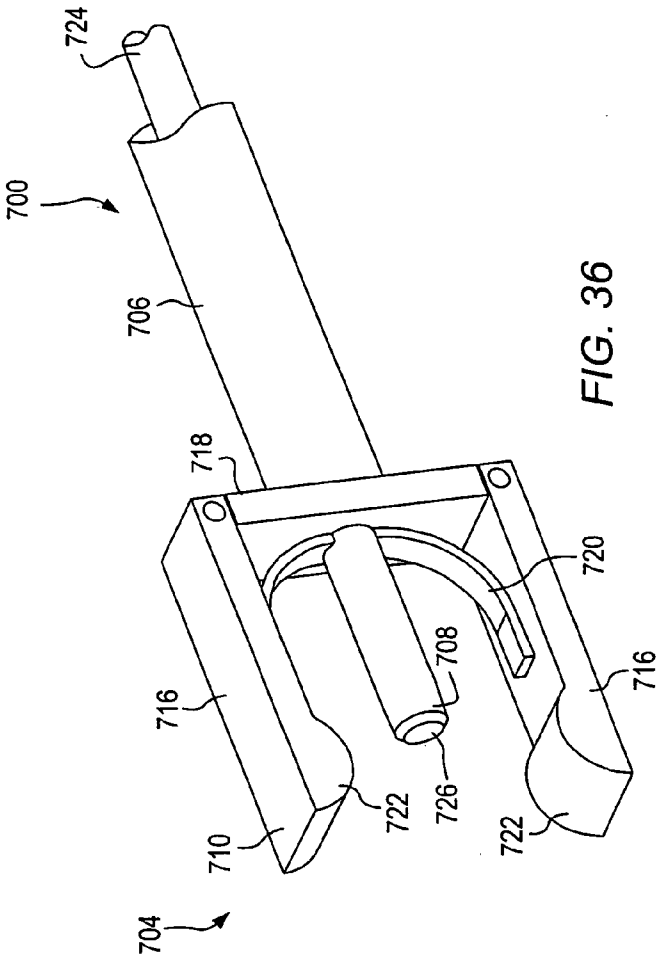
724
700
706
718
720
716
708
726
722
710
704

FIG. 36

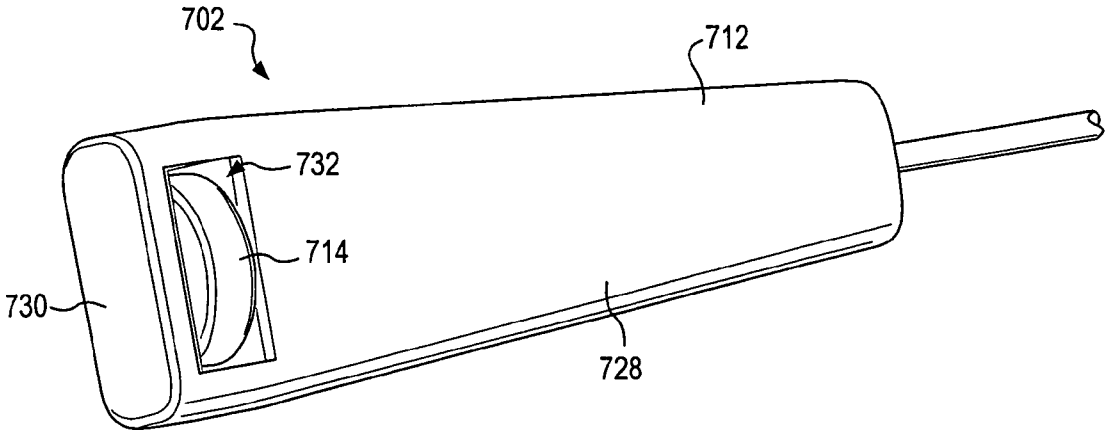

FIG. 37

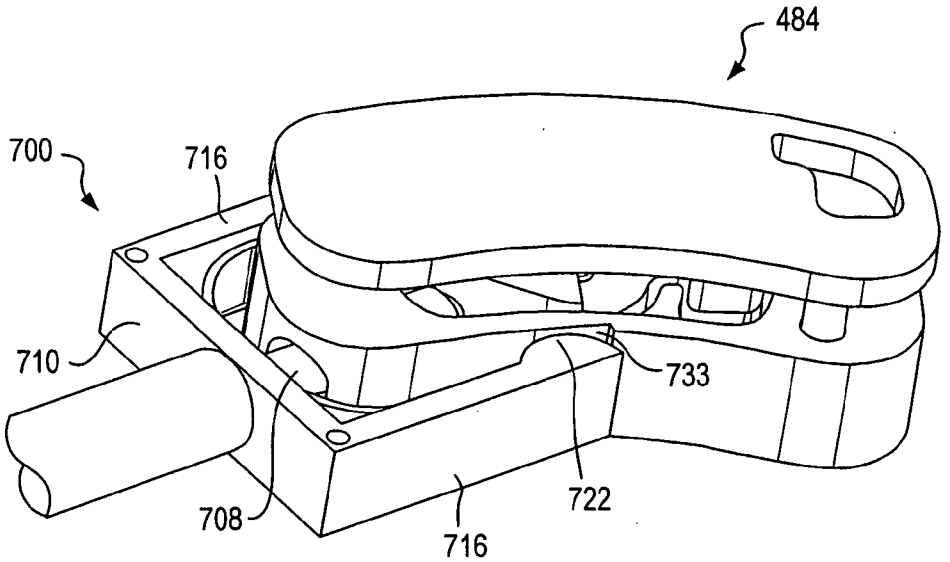

FIG. 38

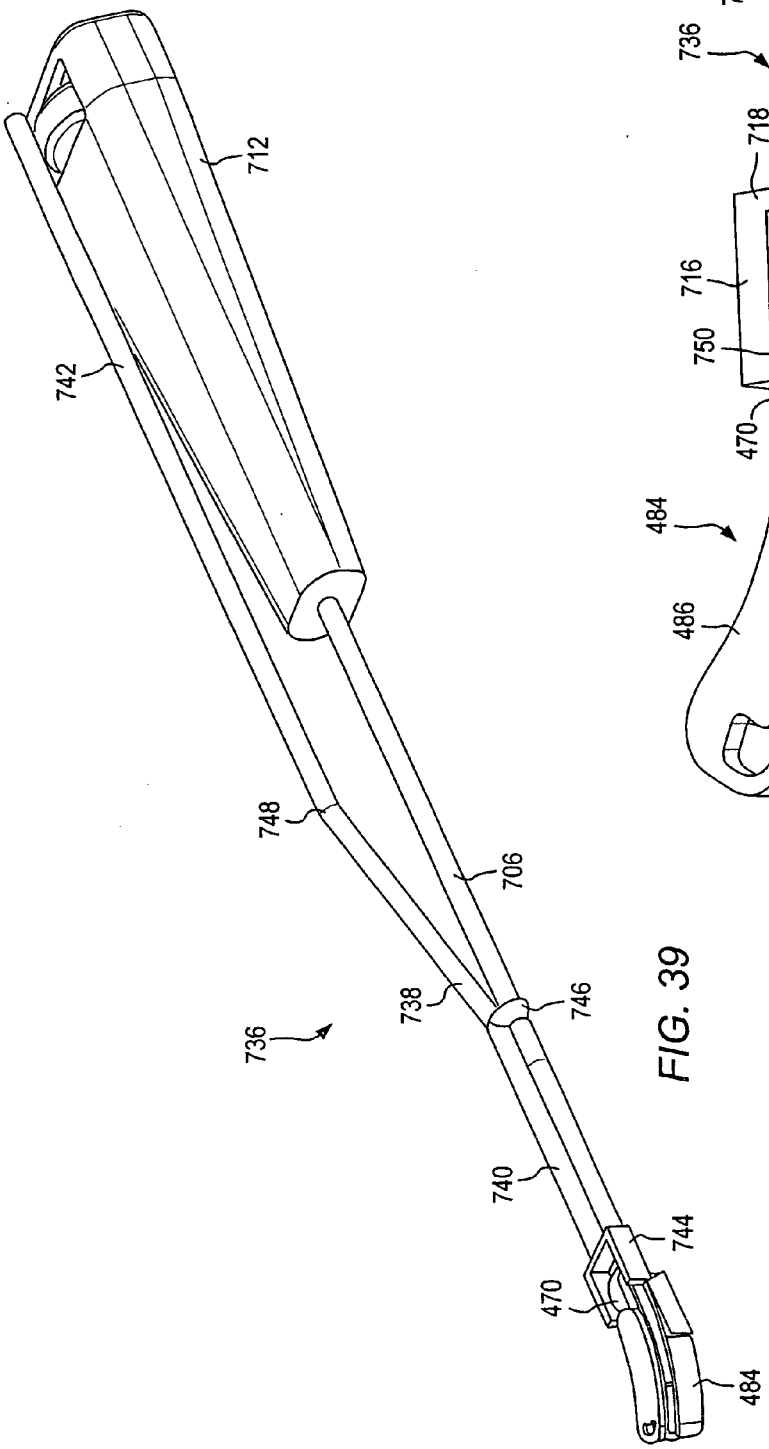
712
742
748
706
736
738
746
740
744
470
484

FIG. 39

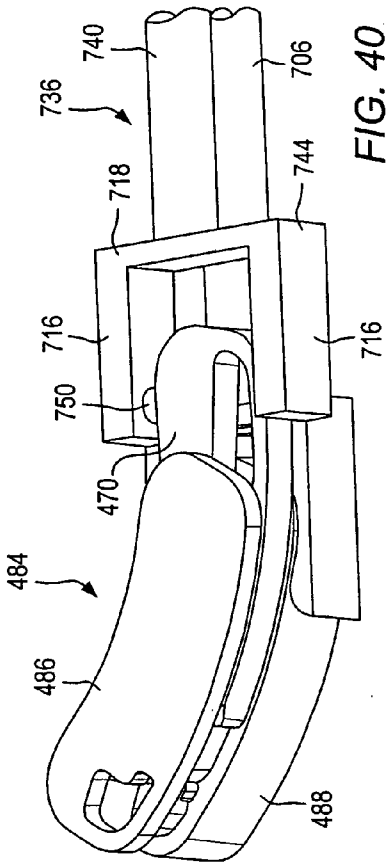
740
706
736
718
744
716
716
750
470
484
486
488

FIG. 40

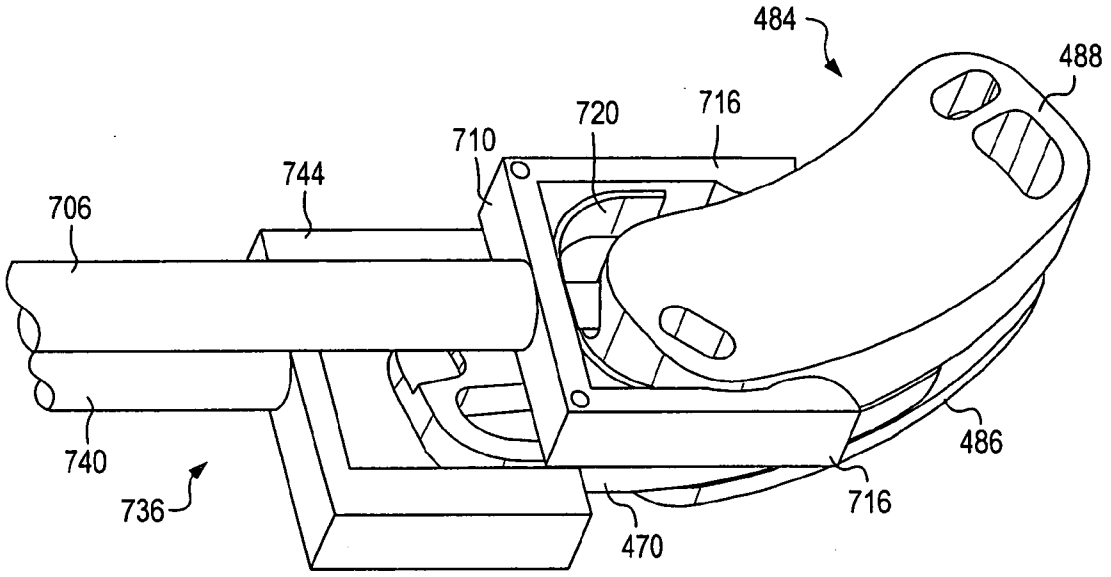

FIG. 41

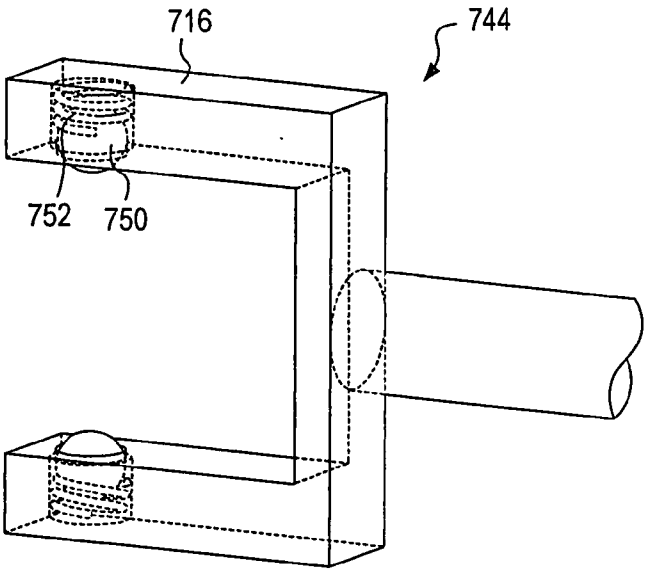

FIG. 42

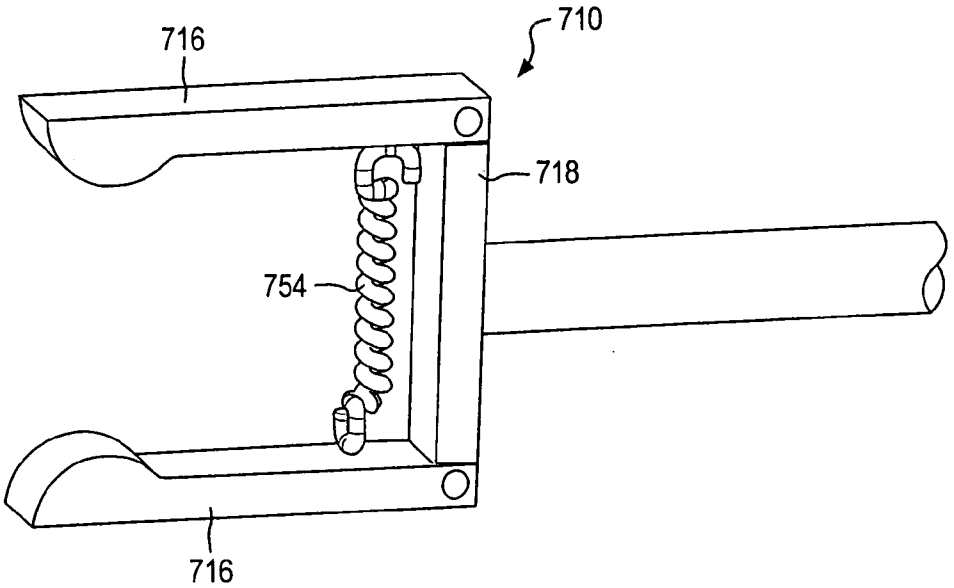

FIG. 43

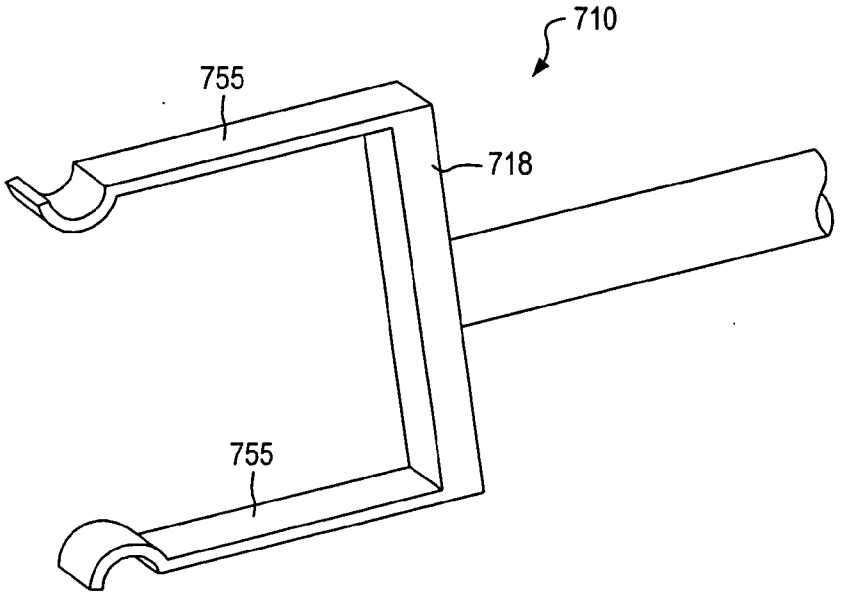

FIG. 44

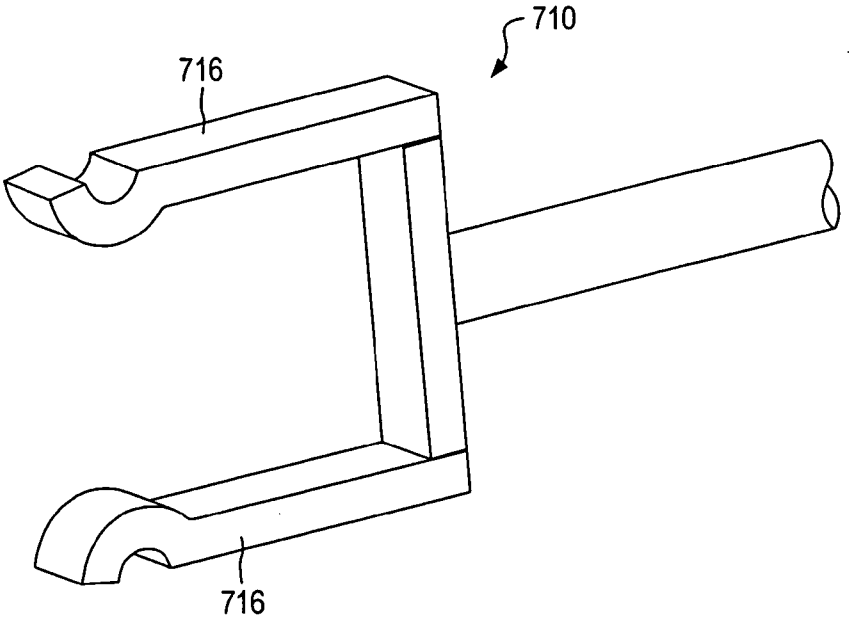

FIG. 45

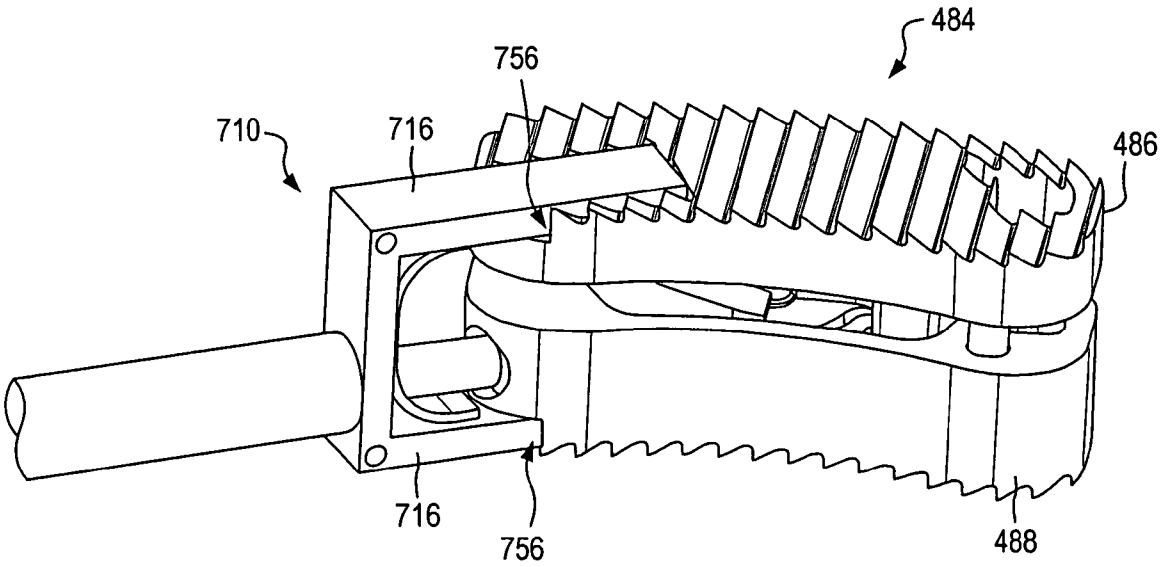

FIG. 46

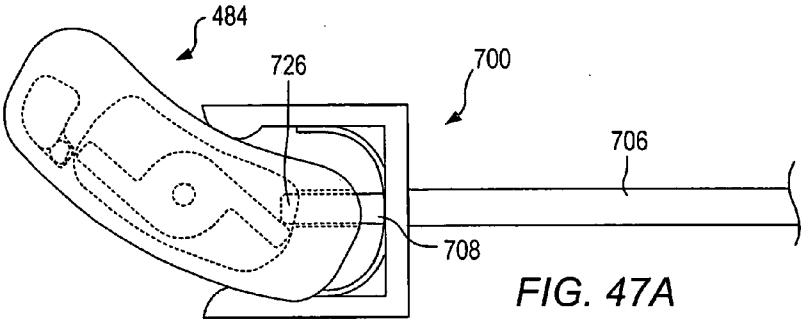

FIG. 47A

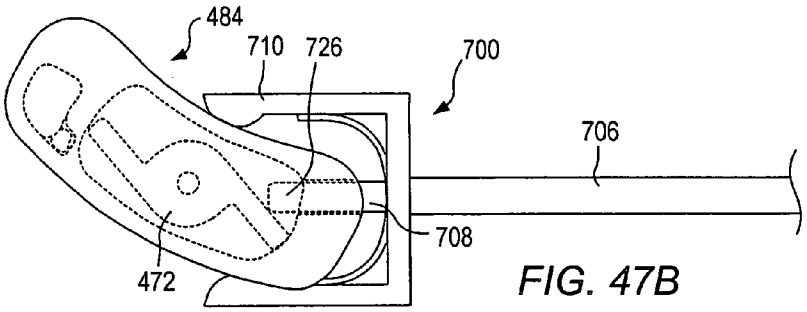

FIG. 47B

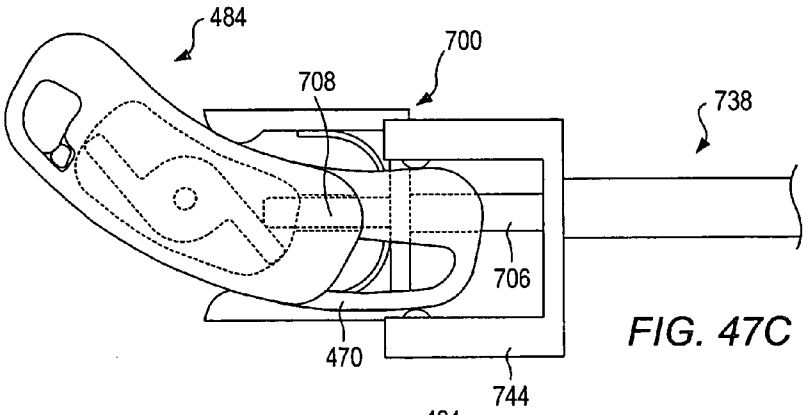

FIG. 47C

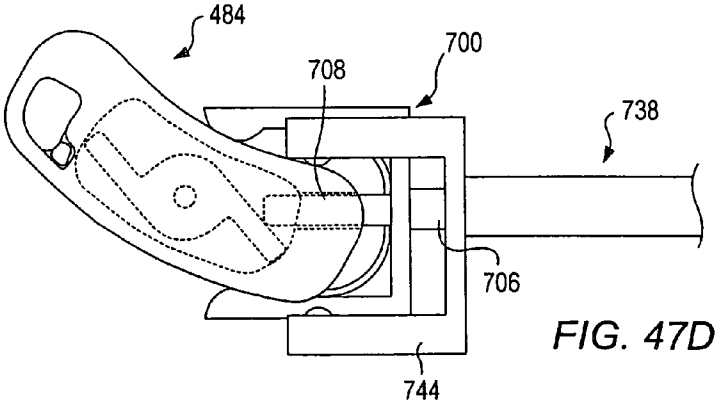

FIG. 47D

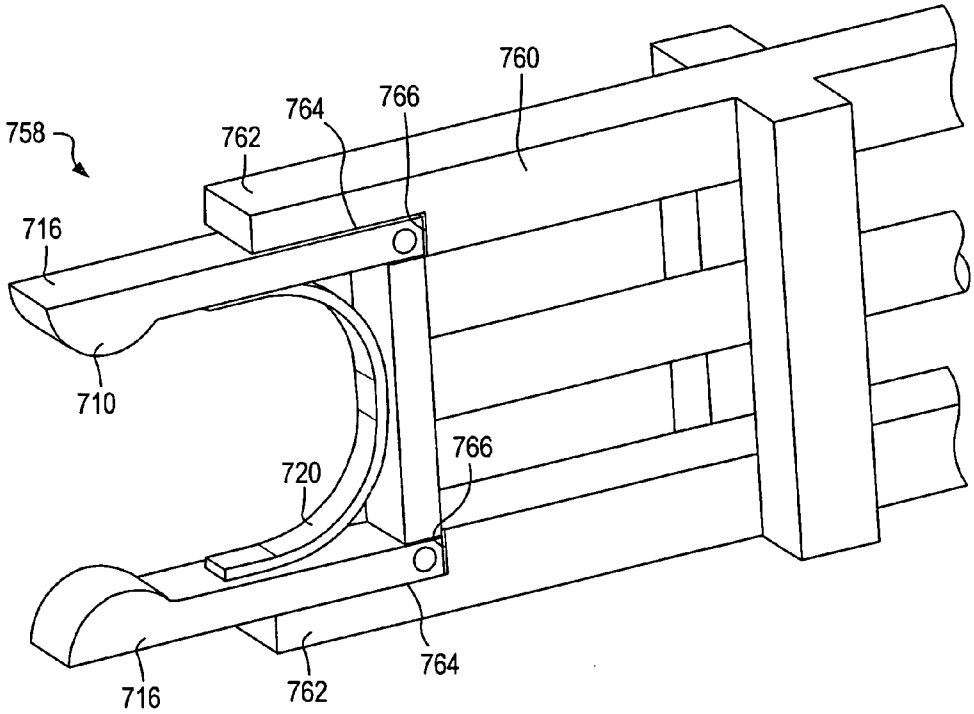
758
760
764
766
762
716
710
720
766
716
762
764

FIG. 48

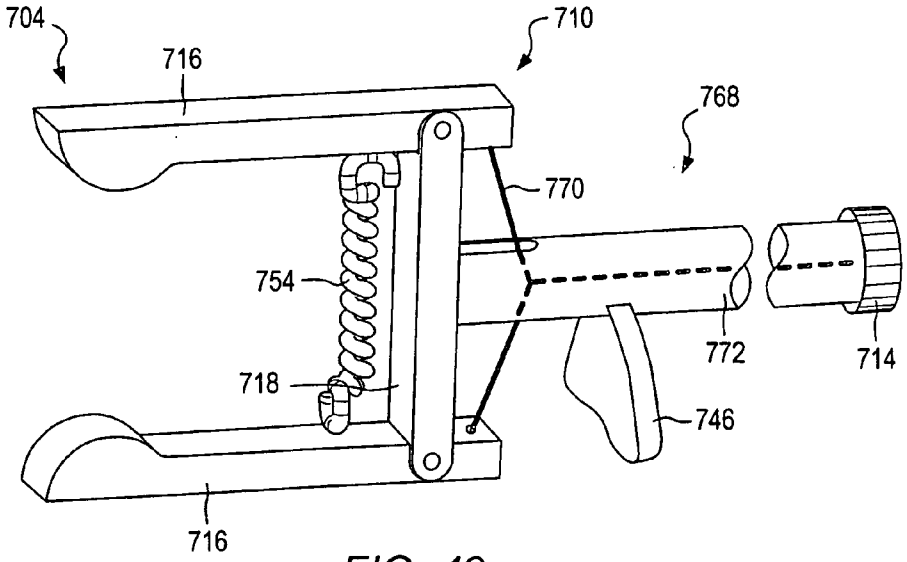
704
710
716
768
770
754
772
714
718
746
716

FIG. 49

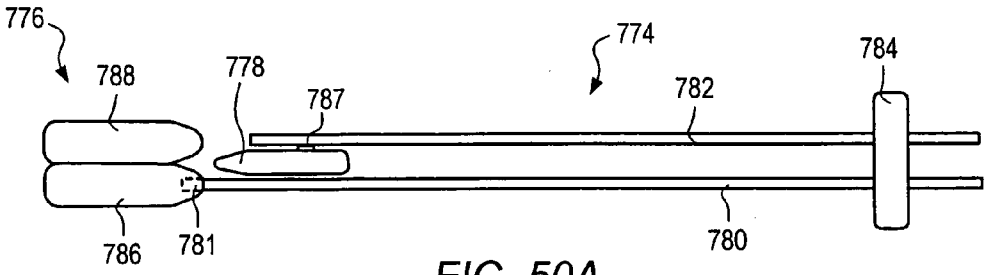

FIG. 50A

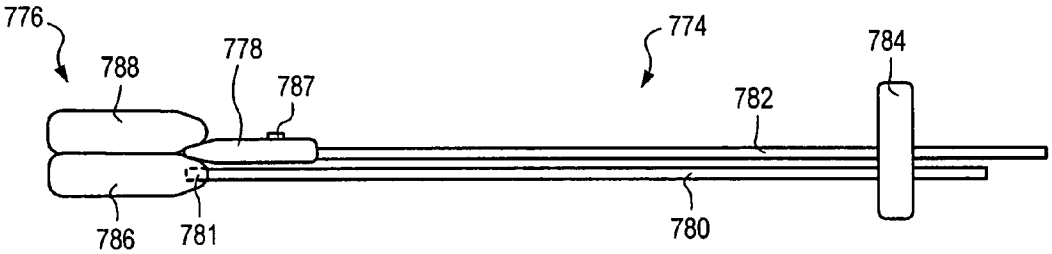

FIG. 50B

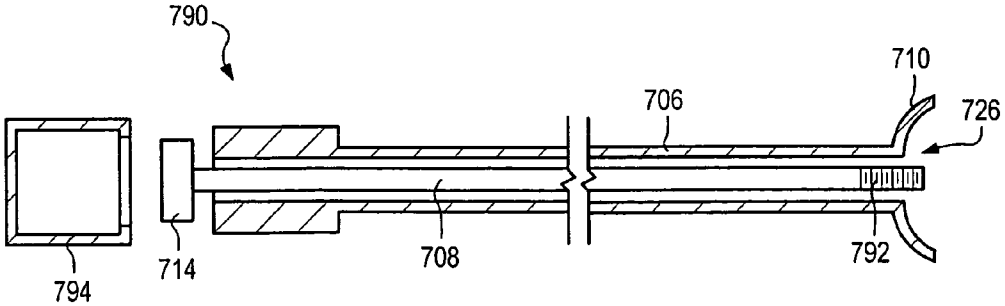

FIG. 51

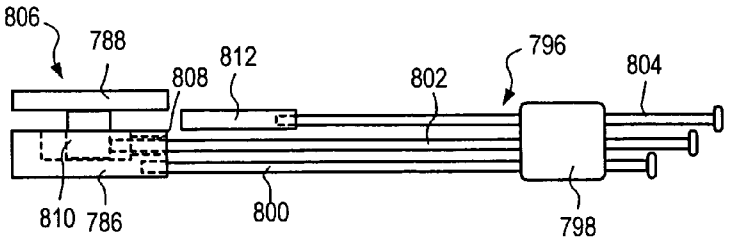

FIG. 52A

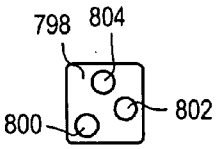

FIG. 52B

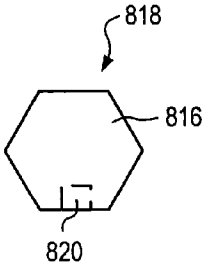

FIG. 53

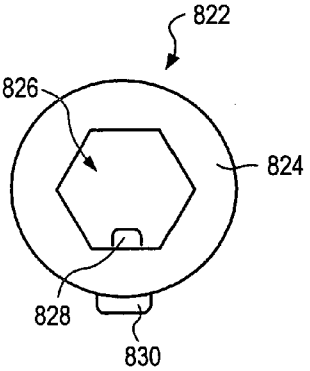

FIG. 54

EXPANDABLE INTERVERTEBRAL IMPLANT WITH WEDGED EXPANSION MEMBER

PRIORITY

[0001] This application is a continuation of U.S. patent application Ser. No. 11/050,632 entitled "Functional Spinal Units" to Charles R. Gordon, Corey T. Harbold, and Heather S. Hanson, filed on Feb. 3, 2005. U.S. patent application Ser. No. 11/050,632 is a continuation in part of U.S. patent application Ser. No. 10/634,950; U.S. patent application Ser. No. 10/660,155; U.S. patent application Ser. No. 10/777,411; and PCT Application No. U.S. 2004/025090. PCT Application U.S. 2004/025090 entitled "Artificial Spinal Unit Assemblies" to Charles Gordon and Corey Harbold, filed on Aug. 4, 2004, claims the benefit of U.S. patent application Ser. No. 10/634,950; U.S. patent application Ser. No. 10/660,155; and U.S. patent application Ser. No. 10/777,411. U.S. patent application Ser. No. 10/777,411 entitled "Artificial Spinal Unit Assemblies" to Charles Gordon and Corey Harbold, filed on Feb. 12, 2004, is a continuation in part of U.S. patent application Ser. No. 10/634,950. U.S. patent application Ser. No. 10/660,155 entitled "Artificial Functional Spinal Unit Assemblies" to Charles Gordon and Corey Harbold, filed on Sep. 11, 2003, is a continuation in part of U.S. patent application Ser. No. 10/634,950. U.S. patent application Ser. No. 10/634,950 entitled "Artificial Functional Spinal Unit Assemblies" to Charles Gordon and Corey Harbold was filed on Aug. 5, 2003.

BACKGROUND

[0002] 1. Field of the Invention

[0003] Embodiments of the invention generally relate to functional spinal implant assemblies for insertion into an intervertebral space between adjacent vertebrae of a human spine, and reconstruction of the posterior elements to provide stability, flexibility, and proper biomechanical motion. More specifically, embodiments of the invention relate to artificial functional spinal units including an expandable artificial intervertebral implant that can be inserted via a posterior surgical approach and used in conjunction with one or more facet replacement devices to approach an anatomically correct range of motion. Embodiments of the invention may also be inserted via an anterior surgical approach.

[0004] 2. Description of Related Art

[0005] The human spine is a complex mechanical structure including alternating bony vertebrae and fibrocartilaginous discs that are connected by strong ligaments and supported by musculature that extends from the skull to the pelvis and provides axial support to the body. The intervertebral discs provide mechanical cushion between adjacent vertebral segments of the spinal column and generally include three basic components: the nucleus pulposus, the annulus fibrosis, and two vertebral end plates. The end plates are made of thin cartilage overlying a thin layer of hard cortical bone that attaches to the spongy, cancellous bone of the vertebral body. The annulus fibrosis forms the disc's perimeter and is a tough outer ring that binds adjacent vertebrae together. The vertebrae generally include a vertebral foramen bounded by the anterior vertebral body and the neural arch, which consists of two pedicles and two laminae that are united posteriorly. The spinous and transverse processes protrude from the neural arch. The superior and inferior articular facets lie at the root of the transverse process.

[0006] The human spine is a highly flexible structure capable of a high degree of curvature and twist in nearly every direction. However, genetic or developmental irregularities, trauma, chronic stress, and degenerative wear can result in spinal pathologies for which surgical intervention may be necessary. In cases of deterioration, disease, or injury, a spinal disc may be removed from a human spine. A disc may become damaged or diseased, reducing intervertebral separation. Reduction of the intervertebral separation may reduce a height of the disc nucleus, which may cause the annulus to buckle in areas where the laminated plies are loosely bonded. As the overlapping laminated plies of the annulus begin to buckle and separate, circumferential or radial annular tears may occur Such disruption to the natural intervertebral separation may produce pain, which may be alleviated by removal of the disc and maintenance of the natural separation distance. In cases of chronic back pain resulting from a degenerated or herniated disc, removal of the disc becomes medically necessary.

[0007] In some cases, a damaged disc may be replaced with a disc prosthesis intended to duplicate the function of a natural spinal disc. U.S. Pat. No. 4,863,477 to Monson, which is incorporated herein by reference, discloses a resilient spinal disc prosthesis intended to replace the resilience of a natural human spinal disc. U.S. Pat. No. 5,192,326 to Bao et al., which is incorporated herein by reference, describes a prosthetic nucleus for replacing just the nucleus portion of a human spinal disc. U.S. Patent Application Publication No. 2005/0021144 to Malberg et al., which is incorporated herein by reference, describes an expandable spinal implant.

[0008] In other cases, it may be desirable to fuse adjacent vertebrae of a human spine together after removal of a disc. This procedure is generally referred to as "intervertebral fusion" or "interbody fusion." Intervertebral fusion has been accomplished with a variety of techniques and instruments. It is generally known that the strongest intervertebral fusion is the interbody fusion (between the lumbar bodies), which may be augmented by a posterior or facet fusion. In cases of intervertebral fusion, either structural bone or an interbody fusion cage filled with bone graft material (e.g., morselized bone) is placed within the space where the spinal disc once resided. Multiple cages or bony grafts may be used within that space.

[0009] Cages of the prior art have been generally successful in promoting fusion and approximating proper disc height. Cages inserted from the posterior approach, however, are limited in size by the interval between the nerve roots. Therefore, a fusion implant assembly that could be expanded from within the intervertebral space could reduce potential trauma to the nerve roots and yet still allow restoration of disc space height. It should be noted, however, that fusion limits overall flexibility of the spinal column and artificially constrains the natural motion of the patient. This constraint may cause collateral injury to the patient's spine as additional stresses of motion, normally borne by the now-fused joint, are transferred onto the nearby facet joints and intervertebral discs. Thus, an implant assembly that mimics the biomechanical action of the natural disc carti-

lage, thereby permitting continued normal motion and stress distribution, would be advantageous.

[0010] A challenge of instrumenting a disc posteriorly is that a device large enough to contact the end plates and slightly expand the space must be inserted through a limited space. This challenge is often further heightened by the presence of posterior osteophytes, which may cause "fish mouthing" of the posterior end plates and result in very limited access to the disc. A further challenge in degenerative disc spaces is the tendency of the disc space to assume a lenticular shape, which requires a relatively larger implant than often is easily introduced without causing trauma to the nerve roots. The size of rigid devices that may safely be introduced into the disc space is thereby limited.

[0011] The anterior approach poses significant challenges as well. Though the surgeon may gain very wide access to the interbody space from the anterior approach, this approach has its own set of complications. The retroperitoneal approach usually requires the assistance of a surgeon skilled in dealing with the visceral contents and the great vessels, and the spine surgeon has extremely limited access to the nerve roots. Complications of the anterior approach that are approach-specific include retrograde ejaculation, ureteral injury, and great vessel injury. Injury to the great vessels may result in massive blood loss, postoperative venous stasis, limb loss, and intraoperative death. The anterior approach is more difficult in patients with significant obesity and may be virtually impossible in the face of previous retroperitoneal surgery.

[0012] Despite its difficulties, the anterior approach does allow for the wide exposure needed to place a large device. In accessing the spine anteriorly, one of the major structural ligaments, the anterior longitudinal ligament, must be completely divided. A large amount of anterior annulus must also be removed along with the entire nucleus. Once these structures have been resected, the vertebral bodies are over distracted in order to place the device within the disc and restore disc space height. Failure to adequately tension the posterior annulus and ligaments increases the risk of device failure and migration. Yet in the process of placing these devices, the ligaments are overstretched while the devices are forced into the disc space under tension. This over distraction can damage the ligaments and the nerve roots. The anterior disc replacement devices currently available or in clinical trials may be too large to be placed posteriorly, and may require over distraction during insertion in order to allow the ligaments to hold them in position.

SUMMARY

[0013] In an embodiment, an intervertebral implant may include first and second members having outer surfaces that engage vertebrae of a human spine. The implant may include an insert positioned between inner surfaces of the first and second members before insertion of the implant between the vertebrae. The implant may include an expansion member that increases a separation distance between the first member and the second member. A portion of the expansion member may engage the insert to increase a range of angular motion between the first and second members after insertion of the implant between the vertebrae. In one embodiment, the insert includes a convex spherical surface that contacts the inner surface of the first or second member. In another embodiment, the insert includes a convex ellipsoidal surface that contacts the inner surface of the first or second member.

[0014] In an embodiment, an insert for an intervertebral implant may be rotatable. The insert may include protrusions, such as radial arms. In certain embodiments, the protrusions may be generally aligned along a longitudinal axis of the implant. The implant may further include an expansion member that engages at least one of the protrusions to rotate the insert. Rotation of the insert may increase a height of the implant. In some embodiments, an implant may provide for a functional spinal unit (e.g., an implant having a first member that articulates relative to a second member). In other embodiments, an implant may provide for fusion of the vertebrae.

[0015] In some embodiments, the insert may have an inclined surface that engages the first or second member. In one embodiment, the insert includes a plurality of cam ramps. In certain embodiments, the insert may comprise platforms. Engagement of the platforms with the first or second member may maintain the implant at an increased height. In other embodiments, one or both of the first and second members may include an inclined surface that engages a portion of an insert. In some embodiments, the inclined portions are angled such that an anterior height of the implant differs from a posterior height of the implant after rotation of the insert.

[0016] In an embodiment, an implant may include a spacer that is inserted between the first and second members. The spacer may maintain the implant at a desired height. In some embodiments, the spacer may include a lip that facilitates insertion (e.g., guides the spacer into position in the implant). In certain embodiments, the spacer may include a protrusion that engages a portion of the implant to provide a tactile sensation when the spacer is fully installed.

[0017] An implant may include aligning elements to maintain alignment of a first member and a second member during use. In certain embodiments, an implant may include stabilizers coupled to a first member that engage a second member to inhibit separation of the first member from the second member. In certain embodiments, the stabilizers may be angled with respect to a top surface of the first member.

[0018] In an embodiment, an implant may include a rotating insert whose axis of rotation is generally aligned along a longitudinal axis of the implant. The insert may include a spiral cam. In one embodiment, the spiral cam is lockable to maintain an expanded height of the implant.

[0019] In an embodiment, a facet replacement device may include two or more pedicle screws and an elongated member. The elongated member may include retaining portions that inhibit translation of at least one end of the rod during use. In certain embodiments, the retaining portions may include rings placed over the elongated member. In one embodiment, the elongated member includes a reduced diameter portion at a junction between the elongated member and a pedicle screw. The retaining portions may allow a limited range of translation and/or angulation of the elongated member with respect to the pedicle screws.

[0020] In some embodiments, resilient members may be provided between retaining portions on an elongated member and pedicle screws. The resilient members may cushion engagement between the retaining portions and the screws.

In one embodiment, the resilient members are O-rings that partially reside in a head of a pedicle screw.

[0021] In another embodiment, a facet replacement device may include pedicle screws having head posts and an elongated member having apertures for receiving the posts. The apertures may allow a limited range of motion of the pedicle screws relative to the elongated member. In one embodiment, the elongated member may be a flat plate. In another embodiment, the elongated member may have a T-shaped cross section. In certain embodiments, resilient members may be provided in the apertures to cushion engagement between the elongated member and the screws.

[0022] In an embodiment, a surgical instrument may include a shaft and a driver rotatably coupled to the shaft. The driver may engage an insert of the implant while the implant is between two vertebrae of a human spine. The driver may be operable to actuate the insert to spread two or more endplate engaging members of the implant apart while the implant is between the vertebrae. The driver may be operated using a thumbwheel or similar device. In certain embodiments, the instrument may include a protector that protects portions of the driver and/or the thumbwheel from damage during use.

[0023] In some embodiments, an instrument may include an inserter that can be movably coupled to a shaft for an implant holder or expansion driver. The inserter may be used to insert a spacer between endplate engaging members of the implant. Engagement of the inserter on the shaft may guide the spacer to a desired location for insertion between the endplate engaging members.

[0024] In an embodiment, a holding device may be used to hold an implant or a spacer. The holding device may include a pair of opposing holding arms that engage surfaces of the implant or spacer. In some embodiments, a holding device may inhibit movement of an implant while a driver is actuated to expand the implant. In certain embodiments, a holding device may be operated using a control member, such as a thumbwheel or lever. In one embodiment, a holding device may include a shape memory alloy portion that allows release of the holding device when the device reaches a certain temperature. In another embodiment, an instrument may include a slide that is selectively positioned to inhibit release of the holding device.

[0025] In an embodiment, a method of performing a minimally invasive surgical procedure may include removing a portion of a disc between two vertebrae of a human spine, placing an implant in a disc space between the vertebrae using a posterior approach, spreading end plate engaging members of the implant in the disc space until the implant reaches an expanded height, and fixing the height of the implant at the expanded height. The maximum disc space height between the vertebrae at any time during the procedure may be less than or equal to the expanded height of the implant. In some embodiments, fixing the height of the implant may include inserting one or more spacers between the end plate engaging members.

BRIEF DESCRIPTION OF THE DRAWINGS

[0026] Advantages of the present invention will become apparent to those skilled in the art with the benefit of the following detailed description and upon reference to the accompanying drawings in which:

[0027] **FIG. 1** depicts a top view of an embodiment of a cylindrical, expandable implant.

[0028] **FIG. 2A** is a side cross-sectional view of the embodiment depicted in **FIG. 1**.

[0029] **FIG. 2B** is a side cross-sectional view of the implant embodiment depicted in **FIG. 1**.

[0030] **FIG. 3A** is a cross-sectional view of an embodiment of an expandable implant in extension.

[0031] **FIG. 3B** is a cross-sectional view of an embodiment of an expandable implant in flexion.

[0032] **FIG. 4A** is a cross-sectional view of an embodiment of an expandable implant prior to expansion.

[0033] **FIG. 4B** is a cross-sectional view of an embodiment of an expandable implant following expansion.

[0034] **FIG. 4C** is a cross-sectional view of an embodiment of an expandable implant employing buttress screws to secure the device between vertebrae.

[0035] **FIG. 4D** is a cross-sectional view of an embodiment of an expandable implant employing an expansion plate with a securing keel to secure the device between vertebrae.

[0036] **FIG. 4E** is a side perspective of an embodiment of an expandable implant employing a securing keel.

[0037] **FIG. 5** is a side perspective view illustrating placement of an expandable implant in an intervertebral space.

[0038] **FIG. 6A** depicts a top view of an embodiment of a c-shaped, expandable implant.

[0039] **FIG. 6B** is a top view of an embodiment of a c-shaped expandable implant, illustrating insertion of expansion screws to expand the implant.

[0040] **FIG. 6C** is a top view of an embodiment of a c-shaped, expandable implant, illustrating insertion of a non-threaded expansion member to expand the implant.

[0041] **FIG. 6D** is a top view of an embodiment of a c-shaped, expandable implant with a posteriorly positioned expansion opening.

[0042] **FIG. 7A** is a cross-sectional view of an embodiment of an expandable, articulating implant including an insert with stops.

[0043] **FIG. 7B** is a cross-sectional view of the embodiment depicted in **FIG. 7A** showing articulation of the implant.

[0044] **FIG. 8A** is a top view of an embodiment of a c-shaped, expandable implant, illustrating the insertion of an expansion plate to expand the implant.

[0045] **FIG. 8B** is a side cross-sectional view of an embodiment of a c-shaped, expandable implant, illustrating the insertion of an expansion plate to expand the implant.

[0046] **FIG. 8C** is a side cross-sectional view of an embodiment of an expandable implant, featuring stabilizers.

[0047] **FIG. 8D** is a side cross-sectional view of an embodiment of an expandable implant in flexion, featuring stabilizers.

[0048] **FIG. 9A** is a top view of an embodiment of an expandable cage.

[0049] **FIG. 9B** is a side cross-sectional view of an embodiment of an expandable cage prior to expansion.

[0050] **FIG. 9C** is a side cross-sectional view of an embodiment of an expandable following expansion.

[0051] **FIG. 9D** is a side cross-sectional view of an embodiment of an expandable cage with a larger upper surface area prior to expansion.

[0052] **FIG. 9E** is a side cross-sectional view of an embodiment of an expandable cage with a larger upper surface area following expansion.

[0053] **FIG. 9F** is a cross-sectional view of an embodiment of a cage that is expandable in two directions.

[0054] **FIG. 10A** is a posterior view of an embodiment of a c-shaped lordotic expandable implant.

[0055] **FIG. 10B** is a top view of an embodiment of a c-shaped lordotic expandable implant.

[0056] **FIG. 11A** is a lateral view of an embodiment of a c-shaped lordotic expandable implant prior to expansion.

[0057] **FIG. 11B** is a lateral view of an embodiment of a c-shaped lordotic expandable implant following expansion.

[0058] **FIG. 12A** is a side cross-sectional view of an embodiment of an expandable lordotic cage prior to expansion.

[0059] **FIG. 12B** is a side cross-sectional view of an embodiment of an expandable lordotic cage following expansion.

[0060] **FIG. 13A** is a lateral view of an embodiment of a c-shaped lordotic expandable implant with an inclined expansion member.

[0061] **FIG. 13B** is a side cross-sectional view of an embodiment of an expandable lordotic cage with an inclined expansion member.

[0062] **FIG. 14A** is a perspective view of an embodiment of an expandable, articulating implant with a spiral cam.

[0063] **FIG. 14B** is a cross-sectional view of the implant embodiment depicted in **FIG. 14A** prior to expansion.

[0064] **FIG. 14C** is a cross-sectional view of the implant embodiment depicted in **FIG. 14A** following expansion.

[0065] **FIG. 15A** is a top view of an embodiment of a c-shaped expandable, articulating implant with a round insert.

[0066] **FIG. 15B** a side cross-sectional view of an embodiment of a c-shaped implant with an expansion member/advancing element combination prior to expansion.

[0067] **FIG. 15C** is a side cross-sectional view of an embodiment of a c-shaped implant with an expansion member/advancing element combination following expansion.

[0068] **FIG. 16A** is a perspective view of an embodiment of an expandable, articulating implant before expansion.

[0069] **FIG. 16B** is a perspective view of an embodiment of an expandable, articulating implant following expansion.

[0070] **FIG. 17** is a perspective view of an embodiment of a portion of an implant with a double-wedged expansion member.

[0071] **FIG. 18A** is a cross-sectional view of an embodiment of an expandable, articulating implant with a wedged insert.

[0072] **FIG. 18B** is a top view of an embodiment of a spacer.

[0073] **FIG. 19A** is a perspective view of an embodiment of an expandable cage with an elongated insert.

[0074] **FIG. 19B** is a cross-sectional view of the expandable cage embodiment depicted in **FIG. 19A**.

[0075] **FIG. 19C** is a view of the inferior surface of the upper body of the cage depicted in **FIG. 19A**.

[0076] **FIG. 20A** is a perspective view of an embodiment of a cage including a cam and cam ramps.

[0077] **FIG. 20B** is a view of the inferior surface of the upper body of the embodiment of the cage depicted in **FIG. 20A**.

[0078] **FIG. 20C** illustrates the use of an advancing element to advance the cam onto the cam ramp of the cage embodiment depicted in **FIG. 20B**.

[0079] **FIG. 20D** is a cross-sectional view of an embodiment of an articulating cage including a cam and cam ramps.

[0080] **FIG. 21A** depicts a perspective view of an embodiment of an expandable, articulating cage with toothed engaging surfaces.

[0081] **FIG. 21B** depicts a perspective view of the cage depicted in **FIG. 21A** (without the toothed engaging surface) after expansion.

[0082] **FIG. 22** depicts a perspective view of an embodiment of an insert with four cam ramps.

[0083] **FIG. 23** depicts a perspective view of an embodiment of a portion of a cage with cam ramps and stabilizers.

[0084] **FIG. 24A** depicts a perspective view of an embodiment of a spacer coupled to an insert of an implant.

[0085] **FIG. 24B** depicts a perspective view of an embodiment of a spacer with a protrusion.

[0086] **FIG. 24C** depicts a perspective view of an embodiment of a spacer with a protrusion and a lip.

[0087] **FIG. 24D** depicts a perspective view of an embodiment of an insert with a recess for accepting a protrusion of a spacer.

[0088] **FIG. 24E** depicts a cross-sectional view of an embodiment of a spacer with a lip coupled to an insert in an expandable cage.

[0089] **FIG. 25** depicts a perspective view of an embodiment of insertion of a spacer into an expanded cage.

[0090] **FIG. 26A** depicts a perspective view of an embodiment of insertion of a spacer into an expanded cage.

[0091] **FIG. 26B** depicts a perspective view of an embodiment of the cage depicted in **FIG. 26A** after insertion of the spacer.

[0092] **FIG. 26C** depicts a perspective view of an embodiment of the cage depicted in **FIG. 26A** after insertion of the spacer.

[0093] **FIG. 27** depicts a perspective view of an embodiment of an expanded cage with a large profile spacer.

[0094] **FIG. 28A** is a side view of an embodiment of a facet replacement device, featuring a rod with two washer-type heads.

[0095] **FIG. 28B** is a side view of an embodiment of a portion of a facet replacement device, featuring a rod with a single washer-type head.

[0096] **FIG. 28C** is a cross-sectional view of an embodiment of a pedicle screw featuring a locking screw head.

[0097] **FIG. 28D** is a cross-sectional view of an embodiment of a pedicle screw featuring a head-locking insert that allows translation and rotation of a rod.

[0098] **FIG. 29A** is a side view of an embodiment of a portion of a facet replacement device, featuring a rod having a ball joint.

[0099] **FIG. 29B** is a side view of an embodiment of a portion of a facet replacement device featuring a retaining plate.

[0100] **FIG. 29C** is a top view of an embodiment of a portion of a facet replacement device featuring a retaining plate.

[0101] **FIG. 29D** is a top view of an embodiment of a portion of a facet replacement device featuring a combination multi-axial pedicle screw and retaining bar with post-type pedicle screw system.

[0102] **FIG. 29E** is a side view of an embodiment of a post-type pedicle screw.

[0103] **FIG. 29F** illustrates attachment of the retaining bar to the post-type pedicle screw.

[0104] **FIG. 30** is a posterior view of a portion of a human spine after reconstruction and implantation of an embodiment of an artificial functional spinal unit including an expandable implant and a facet replacement device.

[0105] **FIG. 31A** is a perspective view of an embodiment of a portion of a facet replacement device.

[0106] **FIG. 31B** is a cross-sectional view of the facet replacement device depicted in **FIG. 31A**.

[0107] **FIG. 31C** is a cross-sectional view of the facet replacement device depicted in **FIG. 31A**.

[0108] **FIG. 31D** is a perspective view of an embodiment of a reduced diameter portion of a rod resting in a pedicle screw head of a facet replacement device.

[0109] **FIG. 32** is a perspective view of an embodiment of a portion of a facet replacement device with a retainer to limit the motion of a rod.

[0110] **FIG. 33A** is a perspective view of an embodiment of a portion of a facet replacement device designed to couple to a plate with a T-shaped cross section.

[0111] **FIG. 33B** is a cross-sectional view of the facet replacement device depicted in **FIG. 33A**.

[0112] **FIG. 34A** is a perspective view of an embodiment of a portion of a facet replacement device including a pedicle screw with a ball joint.

[0113] **FIG. 34B** is a cross-sectional view of the facet replacement device depicted in **FIG. 34A**.

[0114] **FIG. 34C** is a cross-sectional view of the facet replacement device depicted in **FIG. 34A**.

[0115] **FIG. 35** is a perspective view of an instrument for installing and expanding an implant.

[0116] **FIG. 36** is a detail view of a distal end of an instrument for installing and expanding an implant.

[0117] **FIG. 37** is a detail view of a proximal end of an instrument for installing and expanding an implant.

[0118] **FIG. 38** is a perspective view of an expandable implant held by an instrument including a holding device and expansion driver.

[0119] **FIG. 39** is a perspective view of an instrument for installing an expandable implant including a spacer.

[0120] **FIG. 40** is a perspective top view of an expandable implant held by an instrument with a partially inserted spacer.

[0121] **FIG. 41** is a perspective bottom view of an expandable implant with a partially inserted spacer.

[0122] **FIG. 42** is a perspective view of a holding device including opposing arms with ball detent mechanisms.

[0123] **FIG. 43** is a perspective view of a holding device including opposing arms coupled by a coil spring.

[0124] **FIG. 44** is a perspective view of a holding device including opposing spring arms.

[0125] **FIG. 45** is a perspective view of a holding device with shape memory alloy arms.

[0126] **FIG. 46** is a perspective view of an implant held in a holding device including upper and lower holding arms.

[0127] **FIGS. 47A-47D** illustrate use of an instrument to expand an implant and install a spacer.

[0128] **FIG. 48** is a perspective view of a distal end of an instrument including a holding device with a slide.

[0129] **FIG. 49** is a perspective view of an instrument with a holding device coupled to a control member.

[0130] **FIG. 50A** is a side view of a dual rod instrument during guided advancement of a spacer.

[0131] **FIG. 50B** is a side view of a dual rod instrument with one rod positioned to impact the spacer between upper and lower bodies of an implant.

[0132] **FIG. 51** is a cross-sectional view of an instrument including a driving portion that directly engages an insert for expanding an implant.

[0133] **FIGS. 52A and 52B** are side views of an instrument including multiple rods with threaded ends.

[0134] **FIG. 53** is a schematic end view of a head of a fastener for a spinal system.

[0135] **FIG. 54** is a schematic end view of a driver for a fastener of a spinal system.

[0136] While the invention may be susceptible to various modifications and alternative forms, specific embodiments thereof are shown by way of example in the drawings and will herein be described in detail. The drawings may not be to scale. It should be understood, however, that the drawings and detailed description thereto are not intended to limit the invention to the particular form disclosed, but to the contrary, the intention is to cover all modifications, equivalents, and alternatives falling within the spirit and scope of the present invention as defined by the appended claims.

DETAILED DESCRIPTION

[0137] As used herein, "implant" generally refers to an artificial intervertebral implant or cage. The shape and/or size of an implant or other device disclosed herein may be chosen according to factors including, but not limited to, the surgical approach employed for insertion (e.g., anterior or posterior), the intended position in the spine (e.g., cervical or lumbar), and a size of the patient. For example, cervical implants may range from about 6 mm to about 11 mm in height, and lumbar implants may range from about 10 mm to about 18 mm in height. Heights outside these ranges may be used as required by a patient's anatomy. In general, implants with a substantially round cross section may range from about 14 mm to about 26 mm in diameter, and implants with a substantially square cross section may range from a size of about 14 mm square to a size of about 26 mm square. Implants that are substantially rectangular or trapezoidal may range from about 8 mm to about 12 mm along short side of the implant to about 24 mm to about 30 mm along a long side of the implant. As used herein, "c-shaped" implants generally refer to implants with an arcuate shape. Some c-shaped implants may be slightly curved (e.g., "banana-shaped"), while other c-shaped implants may have a higher degree of curvature (e.g., more closely approximating a "c").

[0138] It is to be understood that implants described herein may include features not necessarily depicted in each figure. In some embodiments, an endplate engaging surface of any implant may have regularly or irregularly spaced protrusions of uniform or various shapes and sizes to facilitate retention of the implant in a desired position between vertebrae. For example, an endplate engaging surface of an implant may include teeth or ridges. In some embodiments, members of an implant may include one or more openings to accommodate packing of bone graft material and/or to allow for bone ingrowth. In certain embodiments, one or more surfaces of an implant may include material, such as osteoconductive scaffolding, to enhance integration of the implant in a patient's spine. In some embodiments, a substance to be delivered to a patient's body may be included in a portion of the implant for delivery to the insertion site. In certain embodiments, implants depicted herein may include features allowing the implant to provide a desired lordotic angle (e.g., up to about 15°) between vertebrae.

[0139] As used herein, an "expandable" implant generally refers to an implant designed such that a height of the implant and/or a separation distance between two parts of the implant may be increased. In some embodiments, an implant may be expanded after insertion of the implant in a human spine. In certain embodiments, a height of an implant may be decreased after the implant has been expanded during insertion in a human spine. In other embodiments, expansion of an implant may be substantially irreversible after insertion in a human spine.

[0140] As used herein, an "articulating" implant generally refers to an implant designed such that at least two members of the implant are capable of undergoing rotational motion with respect to each other in at least one direction after insertion in a human spine. In some embodiments, one or more members of an articulating implant may be capable of rotating in more than one direction with respect one or more other members of the implant after insertion in a human spine to allow, for example, anterior-posterior rotation and/or lateral bending. In some embodiments, rotation may occur about fixed axes. In certain embodiments, an axis of rotation may change as one member of an implant rotates relative to another member of the implant. In some embodiments, one or more members of an articulating implant may be capable of translating with respect to one or more other members of the implant. As used herein, an articulating implant may also be described as "functional" or "dynamic".

[0141] Implant embodiments depicted herein may be expandable and/or articulating. In certain embodiments, expansion of an implant after insertion in a human spine may allow articulation of the implant. That is, the implant may not display articulating motion before expansion of the implant in a human spine. In other embodiments, expansion of an implant after insertion in a human spine may allow an increased range of motion (increased articulation) between at least two members of the implant. As used herein, "insertion" of an implant in a human spine may refer to assembly, insertion, positioning, and/or expansion of the implant.

[0142] As used herein "facet replacement device" generally refers to a facet replacement device. For simplicity, a portion of a facet replacement device may generally be referred to as a facet replacement device. The facet replacement devices disclosed herein generally allow for rotational and/or translational motion of one or more portions of the facet replacement device including, but not limited to, a plate or elongated member (e.g., rod, bar, rail). Pedicle screws of facet replacement devices disclosed herein may retain multi-axial character after insertion of the facet replacement device. As used herein, "pedicle screw" refers to a portion of a facet replacement device that couples to bone. As used herein, "pedicle screw head" refers to a portion of a facet replacement device that accepts an elongated member. As used herein, "pedicle screw" and "pedicle screw head" may be separate components that may be assembled for use in a facet replacement device.

[0143] As used herein, "coupled" includes a direct or indirect coupling unless expressly stated otherwise. For example, a control member may be directly coupled to a driver or indirectly coupled by way of an intermediate shaft. As used herein, "member" includes an individual member or a combination of two or more individual members. A "member" may be straight, curved, flexible, rigid, or a combination thereof. A member may have any of various regular and irregular forms including, but not limited to, a rod, a plate, a disk, a cylinder, a disk, or a bar.

[0144] An implant may be constructed of one or more biocompatible metals having a non-porous quality (e.g., titanium) and a smooth finish. In some embodiments, an implant may be constructed of ceramic and/or one or more other suitable biocompatible materials, such as biocompatible polymers. Biocompatible polymers include, but are not

limited to, polyetheretherketone resin ("PEEK"). In certain embodiments, an implant may be constructed of a combination of one or more biocompatible metals and one or more ceramic and/or polymeric materials. For example, an implant may be constructed of a combination of biocompatible materials including titanium and PEEK.

[0145] **FIG. 1** depicts a top view of an embodiment of an expandable, articulating implant. Implant **100** may be substantially cylindrical. **FIGS. 2A and 2B** depict a side cross-sectional view of implant **100**. In some embodiments, implant **100** may include upper body **102** and lower body **104**. As used herein, "body" may be of unitary construction or may include two or more members. References to "upper body" and "lower body" are chosen for convenience of description of the figures. In some embodiments, an implant may be inserted in a human spine with the "upper body" superior to the "lower body". In some embodiments, an implant may be inserted in a human spine with the "lower body" superior to the "upper body". In certain embodiments, upper and lower bodies of an implant may be substantially interchangeable. Similarly, "inferior" and "superior" surfaces are also named for convenience of description and may assume "superior" and "inferior" positions, respectively, upon insertion.

[0146] Implant **100** may include upper body **102** and lower body **104** in a substantially planar configuration. In some embodiments, superior surface **106** of upper body **102** and inferior surface **108** of lower body **104** may include (e.g., be coupled to) osteoconductive scaffolding **110** (e.g., an osteoconductive mesh structure). Vertebral bone from a patient's spine may grow through osteoconductive scaffolding **110** after insertion of implant **100**. In some embodiments, osteoconductive scaffolding **110** may include spines and/or barbs that project into and secure against the bony endplates of the adjacent vertebral bodies upon expansion of the implant, reducing the possibility of subluxation and/or dislocation.

[0147] In some embodiments, a shape of recess **116** and insert **118** may be substantially the same as a shape of upper body **102** and/or lower body **104**. In certain embodiments, a shape of insert **118** may be different from a shape of upper body **102** and/or lower body **104**. For example, a shape of insert **118** may be oval or round, and upper body **102** and/or lower body **104** may be c-shaped. Implant **100** may include expansion member **124**. Expansion member **124** may be inserted into opening **126** to elevate insert **118** from recess **116**.

[0148] In some embodiments, at least a portion of inferior surface **112** of upper body **102** may be concave. In certain embodiments, superior surface **114** of lower body **104** may include recess **116**. Recess **116** may include, but is not limited to, a channel or groove. In some embodiments, recess **116** may have a rectangular cross section that extends along lower body **104** in the medial-lateral direction. In certain embodiments, a shape of recess **116** may be substantially the same as a shape of upper body **102** and/or lower body **104**. Insert **118** may be positioned in recess **116** on superior surface **114** of lower body **104**. In some embodiments, inferior surface **120** of insert **118** may be substantially flat. In some embodiments, at least a portion of superior surface **122** of insert **118** may be convex. A convex portion of superior surface **122** of insert **118** may articulate with a concave portion of inferior surface **112** of upper body **102**, allowing rotation of upper body **102** with respect to lower body **104**.

[0149] In some embodiments, one or more expansion members may be used to increase a height of an implant and/or increase a separation distance between two or more members of an implant by engaging a portion (e.g., an insert) of the implant. In some embodiments, an expansion member may be a part of the implant. That is, the expansion member may remain coupled to the implant after insertion of the implant in a human spine. For example, expansion members may include, but are not limited to, screws, plates, wedges, and/or a combination of two or more of these elements. In some embodiments, an expansion member may be a tool, instrument, or driver that is used to expand the implant during insertion but does not remain as part of the implant following insertion. In certain embodiments, an expansion member may be used to elevate an insert with respect to the lower body of the implant, thereby increasing a height of the implant and/or increasing a separation distance between two or more members of the implant. In certain embodiments, an expansion member may be used to translate and/or rotate an insert with respect to a body of the implant (e.g., upper body, lower body), thereby increasing a height of the implant and/or increasing a separation distance between two or more members of the implant.

[0150] As depicted in **FIGS. 2A and 2B**, expansion member **124** may be a screw. Expansion member **124** may be inserted through opening **126** and below insert **118** to elevate the insert from lower body **104**. In some embodiments, opening **126** may be threaded to accept a threaded expansion member. In certain embodiments, opening **126** may include features (e.g., notches) to allow stepwise insertion of an expansion member. For example, an expansion member may enter opening **126** in a ratcheting motion. In some embodiments, a void space may be created between insert **118** and the bottom of recess **116** adjacent to the expansion member.

[0151] **FIGS. 3A and 3B** depict side cross-sectional views of implant **100** after insertion of expansion member **124** (e.g., after expansion of the implant) such that concave inferior surface **112** of upper body **102** is able to articulate with convex superior surface **122** of insert **118**. **FIG. 3A** depicts implant **100** with upper body **102** rotated with respect to lower body **104** to undergo extension. **FIG. 3B** depicts implant **100** with upper body **102** rotated with respect to lower body **104** to undergo flexion. In some embodiments, stabilizers **128** may be used to maintain alignment of upper body **102** and lower body **104** during insertion, expansion, and/or articulation of implant **100**. Stabilizers **128** may include, but are not limited to, cables, retaining pegs, elastomeric bands, springs, and/or combinations thereof.

[0152] **FIGS. 4A and 4B** illustrate the expansion of implant **100** in more detail. As shown in **FIG. 4A**, prior to expansion of implant **100**, upper body **102** may rest upon lower body **104**. Inferior surface **120** of insert **118** may rest upon the bottom of recess **116**, which extends along a portion of lower body **104**. In some embodiments, a surface of insert **118** may have angled portion **130**. In some embodiments, an angled portion may be a wedge-shaped portion. In certain embodiments, an angled portion may include a curved surface or other surface to facilitate elevation of

insert **118** from lower body **104**. Angled portion **130** may facilitate the lifting of insert **118**, allowing expansion member **124** to engage inferior surface **120** of insert **118**. Following insertion of expansion member **124** (e.g., following expansion to a desired intervertebral disc height **132**), inferior surface **120** of insert **118** may rest upon the expansion member with upper body **102** raised above lower body **104**, as depicted in **FIG. 4B**.

[**0153**] After expansion of implant **100**, the implant may be secured in place in a human spine with one or more fasteners (e.g., one or more buttress screws). **FIG. 4C** illustrates an embodiment utilizing fastener **134**. Lower body **104** may include portion **136** with one or more openings **138** defined therethrough. One or more fasteners **134** may be inserted through portion **136** and secured into a vertebral body. In some embodiments, fastener **134** may be a screw (e.g., a buttress screw).

[**0154**] In some embodiments, an implant may be secured in place with a portion of an expansion member. As shown in **FIG. 4D**, expansion member **140** may include portion **142** with one or more openings **138** defined therethrough. In some embodiments, portion **142** may be a keel. After expansion member **140** is impacted into place, one or more screws **134** may be inserted through portion **142** and secured into a vertebral body. Expansion member **140** and lower body **104** may also include complementary engaging portion **144** to secure expansion member **140** with lower body **104**.

[**0155**] **FIG. 4E** illustrates implant **100** secured between vertebrae of a human spine. One end of portion **142** may be secured onto lower body **104** of implant **100**. Portion **142** may be rotated after placement of the device in the intervertebral space. After rotation of portion **142**, the portion is secured to the vertebral body above or below implant **100** with one or more fasteners **134** (e.g., screws). **FIG. 5** depicts implant **100** following insertion in a spinal column. In some embodiments, implant **100** may be posteriorly inserted and expanded through void space **146** created by removal of a facet joint.

[**0156**] **FIG. 6A** depicts a top view of an embodiment of a c-shaped expandable implant. Implant **148** may include insert **118**. In some embodiments, insert **118** may be substantially the same as a shape of an upper body and/or lower body of implant **148**. In certain embodiments, a shape of insert **118** may be different from a shape of upper body **102** and/or lower body **104**. For example, a shape of insert **118** may be oval or round, and upper body **102** and/or lower body **104** may be c-shaped. Implant **148** may include two or more expansion members **124**. Expansion members **124** may be inserted into openings **126** to elevate insert **118** from recess **116**.

[**0157**] **FIGS. 6B and 6C** illustrate the insertion of expansion members into c-shaped implants. In the embodiment depicted in **FIG. 6B**, expansion members **124** for implant **148** may be screws. One or more expansion members **124** may be inserted through one or more openings **126**. In some embodiments, one or more openings **126** may be threaded. In certain embodiments, as shown in **FIG. 6C**, implant **150** may include expansion member **152**. Expansion member **152** may be an elongated or curved member sized and/or shaped for insertion through opening **126**. In some embodiments, expansion member **152** may have an angled or wedge portion. Opening **126** may be non-threaded. Expansion member **152** may be impacted or driven through opening **126** into recess **116** to engage insert **118**. Recess **116** may be an arcuate channel or a groove shaped and/or sized to facilitate insertion of expansion member **152** before or after implant **150** has been positioned between vertebrae of a human spine. A shape of expansion member **152** may be complementary to a shape of recess **116**. Engaging insert **118** with expansion member **152** may elevate the insert from the lower body of implant **150**, increasing a separation distance between the upper body and the lower body of the implant. In some embodiments, member **154** may be used to retain expansion member **152** in recess **116**. Member **154** may be, for example, a cap or set screw that fits through opening **126** into a portion (e.g., a threaded portion) of recess **116**.

[**0158**] **FIG. 6D** depicts an alternative embodiment for posteriorly securing an expansion member in a c-shaped implant. Expansion member **156** may be an expansion plate. Expansion member **156** may be inserted through opening **126** of implant **158**. Expansion member **156** may be inserted posteriorly through opening **126** to slidingly engage insert **118** in implant **158** in the medial-lateral direction. After expansion, member **160** may be inserted in recess **116**. In some embodiments, member **160** may be a retainer plate. In some embodiments, member **160** may substantially fill recess **116**. In certain embodiments, member **160** may include a securing device such as, for example, a screw.

[**0159**] **FIGS. 7A and 7B** depict a cross-sectional view of another embodiment of an expandable, articulating implant. Implant **162** may include upper body **102**, lower body **104**, insert **164**, expansion member **152**, and set screw **166** or similar device. Insert **164** may include one or more stops **168**. In some embodiments, stop **168** may be a lip or ledge around a circumference of insert **164**. In certain embodiments, insert **164** may include angled portion **130**. In certain embodiments, expansion member **152** may include angled portion **170**. Before insertion of expansion member **152** into recess **116**, inferior surface **112** of upper body **102** may rest on superior surface **114** of lower body **104**.

[**0160**] With insert **164** positioned in recess **116** of lower body **104**, expansion member **152** may be inserted into recess **116**. Angled portion **170** of expansion member **152** may engage angled portion **130** of insert **164** and expand implant **162**. In some embodiments, set screw **166** may be used to inhibit backout of expansion member **152** after insertion of the expansion member. In certain embodiments, set screw **166** may be used to advance expansion member **152** as well as to inhibit backout of the expansion member.

[**0161**] After expansion of implant **162**, a separation distance between inferior surface **112** of upper body **102** and superior surface **114** of lower body **104** may allow articulation of the upper body with convex superior surface **122** of insert **164**. **FIG. 7A** depicts implant **162** after expansion. As depicted in **FIG. 7A**, upper body **102** is substantially parallel to lower body **104**. **FIG. 7B** depicts implant **162** following articulation of upper body **102** with respect to lower body **104**. As depicted in **FIG. 7B**, stops **168** may limit an angular range of motion of upper body **102** with respect to lower body **104**. In some embodiments, a shape and/or thickness of stops **168** may limit a range of rotation of upper body **102** with respect to lower body **104** to less than about 20°. For example, a range of rotation of upper body **102** may be limited to less than about 5°, less than about 10°, or less than

about 15°. A range of rotation may depend upon, for example, a shape (e.g., round, ellipsoidal, etc.) of the convex portion of superior surface **122** of insert **164**.

[0162] **FIGS. 8A and 8B** depict different cross-sectional views of an embodiment of an expandable, articulating c-shaped implant. As shown in **FIG. 8A**, implant **172** depicts recess **116** designed to accept arcuate expansion member **152**. Implant **172** may have opening **126** on an end (e.g., a short side) of the implant. Expansion member **152** may be impacted into place through opening **126** to elevate insert **118** from lower body **104** after implant **172** has been positioned in an intervertebral space. Recess **116**, as well as expansion member **152**, may have substantially the same shape (e.g., substantially the same curvature) as a portion of the upper body and/or the lower body of implant **172**. In some embodiments, a portion of insert **118** may be oval or round (e.g., ellipsoidal, spherical) to allow improved biomechanical motion of the implant. In some embodiments, a bottom of recess **116** may include a feature (e.g., an integral part of the lower body or an element coupled to a portion of the lower body) designed to retain expansion member **152** in position after expansion. For example, as depicted in **FIG. 8B**, surface **174** of recess **116** may include lip **176** or other feature designed to retain expansion member **152** in the recess. During insertion of implant **172**, a surgeon may force expansion member **152** over lip **176** into place. Passage of expansion member **152** over lip **176** and into place may allow the surgeon to feel when expansion member **152** has been properly inserted. In some embodiments, lip **176** may inhibit dislocation of the implant (e.g., backout of expansion member **152**).

[0163] **FIGS. 8C and 8D** depict cross-sectional views of an embodiment of an expandable, articulating implant. Implant **178** may include stabilizers **180**. Stabilizers **180** may be coupled to lower body **104** and may extend from the lower body into openings **182** in upper body **102**. Stabilizers **180** and/or openings **182** may be of various sizes and/or shapes. For example, Stabilizers **180** may be substantially round and openings **182** may be substantially oval, allowing torsional mobility of upper body **102**. In some embodiments, stabilizers **180** may be captive. Stabilizers **180** may inhibit dislocation of upper body **102** from lower body **104** during flexion, extension, and/or torsional motion of implant **178**. As shown in **FIG. 8D**, when implant **178** is flexed or extended, stabilizers **180** may inhibit dislocation of upper body **102** from lower body **104**.

[0164] The disclosed techniques of expanding an implant by insertion of an expansion member may also be employed to expand a PLIF or TLIF cage. **FIGS. 9A-9C** depict views of an embodiment of an expandable cage. **FIG. 9A** depicts a top view of cage **184**. **FIG. 9B** depicts a cross-sectional view of cage **184** before expansion. In some embodiments, cage **184** may include cage element **186** and insert **188**. Insert **188** may be positioned in cage element **186**. In certain embodiments, cage element **186** may include osteoconductive scaffolding **110**. For example, cage element **186** may include osteoconductive scaffolding **110** on inferior surface **190**. An osteoconductive substance may be placed in osteoconductive scaffolding **110** to promote bone growth into cage **184**. In some embodiments, cage element **186** may include opening **192** through superior surface **194**.

[0165] In some embodiments, insert **188** may include member **196** having inferior surface **198** and superior surface **200**. In some embodiments, member **196** may be substantially planar (e.g., a plate). In certain embodiments, osteoconductive scaffolding **202** may be coupled to superior surface **200** of member **196**. Member **196** may include angled portion **130**. Angled portion **130** may facilitate expansion of cage **184** (e.g., elevation of insert **188**) upon insertion of expansion member **204**. Expansion member **204** may be inserted into opening **206** of cage element **186** and advanced (e.g., impacted, driven) to engage angled portion **130** of member **196**. **FIG. 9C** depicts a cross-sectional view of expanded cage **184**. In some embodiments, lip **176** may inhibit dislocation of expansion member **204** after expansion of cage **184**. In certain embodiments, lip **176** and/or one or more other features may secure expansion member **204** in cage element **186** in such a way that a surgeon may sense tactilely when the expansion member is fully inserted in cage **184**.

[0166] **FIGS. 9D and 9E** depict cross-sectional views of an embodiment of an expandable cage. **FIG. 9D** depicts cage **208** before expansion. Insert **210** of cage **208** may include osteoconductive scaffolding **212** coupled to superior surface **214** of member **216**. In some embodiments, osteoconductive scaffolding **212** may have a T-shaped cross-section, such that the osteoconductive scaffolding rests upon superior surface **218** of cage element **220**, providing an increased surface area between the osteoconductive scaffolding and the bony endplates within the intervertebral space.

[0167] In some embodiments, expandable cages may be expanded in two or more dimensions. **FIG. 9F** depicts an embodiment of a cage that may be expanded in two dimensions. Cage **222** may include cage element **186** and inserts **188**. Cage element **186** may include opening **224** through inferior surface **190** as well as opening **192** through superior surface **194**. Two inserts **188** may be positioned in cage element **186**. As expansion member **204** is inserted into cage element **186** between inserts **188**, the inserts may be forced through openings **192**, **224** to engage the bony endplates within the intervertebral space.

[0168] **FIGS. 10A, 10B**, 11A, and 11B depict an embodiment of a lordotic, c-shaped expandable, articulating implant. The lumbar spine is lordotic, thus the anterior disc height is naturally larger than the posterior disc height. Therefore, an expandable implant for the lumbar spine may advantageously expand into a lordotic position. **FIG. 10A** depicts a posterior view of implant **226**. **FIG. 10B** depicts a top view of implant **226**. **FIGS. 11A and 11B** depict cross-sectional views of implant **226** before and after expansion of the implant, respectively.

[0169] Implant **226** may include upper body **228** and lower body **230**. Lower body **230** may include two or more members. In some embodiments, members of lower body **230** may be coupled (e.g., hinged). Portions of upper body **228** and lower body **230** may be substantially parallel before expansion of implant **226**. In some embodiments, superior surface **106** of upper body **228** and inferior surface **108** of lower body **230** may include osteoconductive scaffolding **110**. In certain embodiments, at least a portion of inferior surface **112** of upper body **228** may be substantially concave.

[0170] Lower body **230** may include lower portion **232** and upper portion **234**. In some embodiments, lower portion **232** and upper portion **234** of lower body **230** may be

coupled with hinge **236**. Hinge **236** may effectively fix posterior disc height **238** (shown in **FIG. 11B**). In certain embodiments, inferior surface **240** of upper portion **234** may be substantially flat. In certain embodiments, at least a portion of superior surface **242** of upper portion **234** may be convex. Lower portion **232** and inferior surface **240** of upper portion **234** may be substantially parallel prior to expansion. In some embodiments, lifting mechanism **244** may be located proximate anterior end **246** of lower portion **232**. Following insertion of implant **226** in an intervertebral space, lifting mechanism **244** may be engaged to increase a height of anterior end **246** of implant **226**. Increasing a height of anterior end **246** of implant **226** may provide a desired anterior disc height **248** and proper lordosis. As depicted in **FIGS. 11A and 11B**, anterior end **246** of upper portion **234** may include notch **250**. Notch **250** may engage lifting mechanism **244** to secure a height of anterior end **246** of implant **226** following expansion.

[**0171**] In some embodiments, at least a portion of inferior surface **112** of upper body **228** may be concave. A concave portion of inferior surface **112** of upper body **228** may articulate with a convex portion of superior surface **242** of upper portion **234**. When viewed in the medial or lateral direction, as shown in **FIGS. 11A and 11B**, upper body **228** may include extension **252** for coupling to elongated member **254**. In some embodiments, elongated member **254** may couple upper body **228** to upper portion **234** of lower body **230**, thus reducing a possibility of dislocation. **FIG. 11B** depicts the posterior placement of hinge **236** and anterior placement of lifting mechanism **244**, with elongated member **254** positioned through upper body **228** and upper portion **234** of lower body **230**.

[**0172**] A lifting mechanism may also be used to achieve desired lordosis with expandable PLIF and TLIF cages, as shown in **FIGS. 12A and 12B**. **FIGS. 12A and 12B** depict side cross-sectional views of cage **256** before and after expansion, respectively. Cage **256** may include upper body **258** and lower body **260**. In some embodiments, hinge **262** may posteriorly couple upper body **258** to lower body **260**. In certain embodiments, hinge **262** may fix posterior disc height **238** after expansion of cage **256**. Superior surface **264** of upper body **258** and inferior surface **266** of lower body **260** may include osteoconductive scaffolding **110**. Lifting mechanism **244** may be engaged to expand cage **256**. In some embodiments, lifting mechanism **244** may engage notch **250** after expansion, reducing the possibility for dislocation after insertion and expansion of cage **256**. A height of lifting mechanism **244** may be chosen to achieve a desired anterior disc height **248** (e.g., to achieve proper lordosis).

[**0173**] **FIG. 13A** depicts a cross-sectional view of an expandable, articulating lordotic implant. **FIG. 13B** depicts a cross-sectional view of an embodiment of an expandable lordotic cage. Implant **268** in **FIG. 13A** and cage **270** in **FIG. 13B** both include expansion member **272** to achieve proper lordosis. In some embodiments, expansion member **272** is generally wedge-shaped. In certain embodiments, posterior end **274** of expansion member **272** may include angled portion **276**. Angled portion **276** may facilitate expansion of implant **268** and cage **270**. Protrusion **280** may be located on superior surface **278** of the anterior end of expansion member **272**. As show in **FIG. 13A**, expansion member **272** may be inserted between upper portion **234** and lower portion **232** of lower body **230**. Protrusion **280** may engage notch **250** to secure a height of implant **268** and cage **270** following expansion. Lip **176** or other feature may be located on an anterior end of superior surface **282** of lower portion **232** to reduce the potential of dislocation of expansion member **272**.

[**0174**] **FIG. 14A** depicts a perspective view of an embodiment of an expandable, articulating implant. Implant **284** may be of any size and/or shape known in the art. **FIGS. 14B and 14C** depict cross-sectional views of implant **284** before and after expansion, respectively. Implant **284** may include upper body **286**, lower body **288**, and elongated member **290**. In some embodiments, lower body **288** may include channel **294**. Lower body **288** may include openings **296** on opposing walls for receiving elongated member **290**. In certain embodiments, elongated member **290** may traverse a portion (e.g., a length) of implant **284**.

[**0175**] In some embodiments, elongated member **290** may include cam portion **298**. In certain embodiments, cam portion **298** may include a spiral cam portion. Cam portion **298** may include an arcuate surface that resides within channel **294** of lower body **288**. In some embodiments, cam portion **298** may be coupled to elongated member **290**. In certain embodiments, cam portion **298** may form an integral part of elongated member **290**. In some embodiments, cam portion **298** may wrap partially around elongated member **290** with increasing thickness. In some embodiments, as depicted in **FIG. 14B**, implant **284** may be in an unexpanded position when cam portion **298** rests at the bottom of channel **294**. When elongated member **290** is rotated, cam portion **298** may spin upward to expand implant **284**. **FIG. 14C** depicts a cross-sectional view of expanded implant **284**.

[**0176**] Superior surface **300** of upper body **286** may contact the bony surface of a human vertebra after insertion of implant **284** in a human spine. In some embodiments, an inferior surface of upper body **286** may articulate with the arcuate surface of cam portion **298**. In certain embodiments, upper body **286** may move back and forth against the arcuate surface of cam portion **298**. This movement may allow biomechanical motion in a human spine in which implant **284** has been inserted and expanded. In some embodiments, elongated member **290** may be held in place in openings **296** to fix a height of implant **284** after expansion. For example, a ratcheting device or fastener (e.g., a set screw) may be used to fix a position of elongated member **290**. In certain embodiments, superior surface **300** of upper body **286** and/or inferior surface **302** of lower body **288** may be coupled to osteoconductive scaffolding.

[**0177**] **FIGS. 15A-15C** depict an embodiment of a c-shaped expandable, articulating implant. **FIG. 15A** depicts a top view of implant **304** with insert **306**. In some embodiments, a portion of insert **306** may be substantially round, providing a close approximation to natural biomechanical motion. **FIGS. 15B and 15C** illustrate side cross-sectional views of implant **304** before and after expansion, respectively. Expansion member **308** may be inserted through opening **310**. In some embodiments, opening **310** may be threaded. Advancing element **312** may be inserted in opening **310** following insertion of expansion member **308**. Advancing element **312** may be used to advance expansion member **308** into position below insert **306**. In some embodiments, advancing element **312** may remain in recess

314 to inhibit dislocation of expansion member **308** after expansion of implant **304**. Use of advancing element **312** (e.g., a set screw) to advance expansion member **308** into place may reduce impaction during positioning of the expansion member. Reducing impaction during positioning of expansion member **308** may reduce stress on portions of a patient's body during the insertion procedure. It should be noted that the expansion member/advancing element combination may be employed with any of the disclosed implants, including cages.

[**0178**] **FIGS. 16A and 16B** depict perspective views of an embodiment of a c-shaped expandable, articulating implant before and after expansion, respectively. As shown in **FIG. 16A**, implant **316** may include insert **306** and expansion member **308**. Insertion of expansion member **308** is achieved by movement of advancing element **312** through opening **310** in an end of implant **316**. Advancing expansion member **308** with advancing element **312** or other device (e.g., a threaded driver) rather than impacting the expansion member may allow a smaller expansion member to be used. Using a smaller expansion member may require a shorter access to the implant, allowing an implant to be positioned in a final TLIF position and then expanded. For example, a smaller expansion member may require a shorter access to the implant. Raising insert **306** with expansion member **308** may increase a height of implant **316**. Increasing a height of implant **316** may increase a range of articulation of the implant after insertion of the implant in a human spine.

[**0179**] **FIG. 17** depicts a perspective view of an embodiment of a portion of an expandable implant. Implant **318** may include expansion member **320**. Expansion member **320** may be advanced with advancing element **322**. As depicted in **FIG. 17**, advancing element **322** may be a screw. In some embodiments, advancing element **322** may engage expansion member **320** from a side (e.g., anterior side, posterior side) of implant **318**. In some embodiments, expansion member **320** may include two angled portions. Angled portion **324** may engage a portion of implant **318** (e.g., an insert or a portion of an upper body or a lower body). Advancing element **322** may engage angled portion **326**, thus allowing a component of the force from the advancing element to increase a height of implant **318**. Accessing expansion member **320** from a longer side (e.g., posterior side) of implant **318** (PLIF approach) may advantageously require a smaller incision and/or cause less tissue damage during insertion of the implant than accessing the expansion member from shorter end of the implant (TLIF approach).

[**0180**] **FIG. 18A** depicts an embodiment of a c-shaped expandable, articulating implant designed to accept a spacer between an upper body and a lower body of the implant after expansion. Upper body **328** of implant **330** may include upper portion **332** and lower portion **334**. Upper portion **332** and lower portion **334** may both have substantially the same c-shape. In some embodiments, superior surface **336** of upper portion **332** may contact a bony surface of a vertebral body after insertion of implant **330** in a human spine. At least a portion of inferior surface **338** of upper portion **332** may be concave. At least a portion of superior surface **340** of lower portion **334** may be convex. In some embodiments, inferior surface **338** of upper portion **332** may articulate with superior surface **340** of lower portion **334**.

[**0181**] In some embodiments, inferior surface **342** of lower portion **334** may include angled portion **344**. As depicted in **FIG. 18A**, angled portion **344** may be a downward projecting ramp. In certain embodiments, angled portion **346** of expansion member **348** may engage angled portion **344** of lower portion **334** during insertion of the expansion member. After expansion of implant **330**, spacer **350** may be inserted in gap **352** between lower portion **334** of upper body **328** and lower body **354**. In some embodiments, spacer **350** may be a shim. In certain embodiments, a superior surface of lower body **354** may include one or more guides **356**. Guides **356** may include, but are not limited to, protrusions, keyways, rails, grooves, ridges, notches, and/or combinations thereof. Guides **356** may align spacer **350** during insertion of the spacer. In some embodiments, guides **356** may inhibit dislocation of spacer **350** after insertion of the spacer.

[**0182**] **FIG. 18B** depicts a top view of an embodiment of spacer **350**. In some embodiments, spacer **350** may have substantially the same shape and/or profile as upper body **328** and/or lower body **354** of implant **330**. In certain embodiments, spacer **350** may be sized such that the spacer is substantially flush with an outside edge of implant **330**. In other embodiments, spacer **350** may protrude from implant **330** (e.g., from a side surface of implant **330**) to facilitate alignment and placement of the spacer in the implant. In some embodiments, spacer **350** may include one or more guides **358**. Guides **358** may include, but are not limited to, grooves, keyways, rails, ridges, protrusions, notches, and/or combinations thereof. Guides **358** on spacer **350** may be complementary to guides on a portion (e.g., upper body, lower body) of an implant.

[**0183**] A height of a spacer may be chosen to provide a desired expanded height of an implant. A height of a spacer may be, for example, 2 mm, 3 mm, 4 mm, or greater. Spacer height may be chosen to achieve a desired height of an implant in a patient's spine. In some embodiments, a spacer with a variable thickness may be used to provide lordosis to an implant. In some embodiments, a spacer may be constructed of biocompatible metal (e.g., titanium). In certain embodiments, a spacer may be constructed of the same material as an implant into which the spacer is to be inserted. In other embodiments, a spacer may include elastomeric material (e.g., silicone) to absorb shock and/or allow additional bending.

[**0184**] **FIG. 19A** depicts a perspective view of an embodiment of an expandable implant with an elongated, rotating insert following expansion. Implant **360** may include upper body **362**, lower body **364**, insert **366**, and advancing element **368**. Intended placement of implant **360** in the spine may determine a shape of upper body **362** and lower body **364** (e.g., c-shaped, round). Superior surface **370** of lower body **364** may include recess **372**. In some embodiments, recess **372** may be a channel. Insert **366** may be positioned in recess **372**. Insert **366** may remain in recess **372** during insertion and expansion of implant **360**. In some embodiments, inferior surface **374** of insert **366** may be substantially flat. Insert **366** may have an elongated shape with one or more angled portions **376** on superior surface **378** of the insert.

[**0185**] As advancing element **368** is advanced, angled portions **376** may engage extensions **450** of upper body **460**.

Advancement of advancing element **394** and rotation of insert **366** may increase a separation distance between upper body **460** and lower body **462**.

[**0186**] **FIG. 19B** depicts a cross-sectional view of implant **360** before expansion. During expansion, angled portions **376** on superior surface **378** of insert **366** may engage angled portions **380** extending downward from inferior surface **382** of upper body **362**. As advancing element **368** is advanced into recess **372** in lower body **364**, insert **366** rotates in recess **372** on superior surface **370** of lower body **364**. In some embodiments, insert **366** remains in recess **372** and is not elevated during insertion and expansion of implant **360** in a human spine. As insert **366** is rotated, angled portions **380** of upper body **362** slide up the angled portions **376** of insert **366**, and the upper body is elevated above lower body **364** to increase a height of implant **360** and/or to increase a separation distance between the upper body and the lower body. The elongated nature of insert **366** may result in a more stable expanded implant than an insert of a shorter length. As shown in **FIG. 19B**, angled portions **376** and/or angled portions **380** do not include a platform portion. Thus, implant **360** may have a variable expansion height. An expansion height of implant **360** may be secured with advancing element **368** or with a spacer of a desired height.

[**0187**] **FIG. 19C** depicts a view of an inferior side of upper body **362** with insert **366** positioned on retaining post **384**. Insert **366** may rotate around retaining post **384**. In certain embodiments, retaining post **384** may limit a height of implant **360** and/or limit a separation distance between upper body **362** and lower body **364**.

[**0188**] **FIG. 20A** depicts a perspective view of an embodiment of a c-shaped expandable implant with a cam device. Implant **386** may include upper body **388**, lower body **390**, insert **392**, and advancing element **394**. In some embodiments, advancing element **394** may be an expansion member. In some embodiments, insert **392** may be a cam. As with all of the disclosed embodiments, the placement of implant **386** in the spine will determine a shape of upper body **388** and lower body **390**. In some embodiments, lower body **390** may include recess **398** in superior surface **396**. In certain embodiments, insert **392** may be positioned in recess **398**.

[**0189**] In some embodiments, as shown in **FIG. 20B**, insert **392** may have a generally cylindrical central portion **400** with opening **402** defined therethrough. In certain embodiments, insert **392** may include one or more projections **404** extending radially from central portion **400**. In some embodiments, projections **404** may be arms. Insert **392** may be positioned in recess **398** in lower body **390** on a projection (not shown) extending upward from a superior surface of the lower body such that the projection fits in opening **402** of central portion **400** of the insert. The projection may align and/or retain insert **392** in a desired position.

[**0190**] In some embodiments, upper body **388** may include one or more angled portions or cam ramps **406** that extend downward from inferior surface **408** of the upper body. In certain embodiments, cam ramps **406** may be positioned such that projections **404** of insert **392** engage the cam ramps as central portion **400** of the insert is rotated around the projection of lower body **390**, increasing a separation distance between upper body **388** and lower body **390**.

[**0191**] In certain embodiments, insert **392** may be rotated via the insertion of advancing element **394** (e.g., a screw), as shown in **FIG. 20C**. In some embodiments, stabilizers **412** may extend downward from inferior surface **408** of upper body **388** or upward from a superior surface of lower body **390**. In some embodiments, stabilizers **412** may be, for example, retaining pegs. Stabilizers **412** may be of various shapes or sizes as required to limit separation of upper body **388** and lower body **390** as desired. When upper body **388** is placed over lower body **390**, a large diameter portion (e.g., T-shaped, circular, ellipsoidal, rectangular) of stabilizers **412** may be held in openings **414** in lower body **390**. In certain embodiments, stabilizers **412** may be inserted through inferior surface **416** of lower body **390** and then coupled (e.g., spot welded) to inferior surface **408** (e.g., openings in the inferior surface) of upper body **388**.

[**0192**] As depicted in **FIG. 20A**, expansion of implant **386** may increase a separation distance between upper body **388** and lower body **390** to form gap **418** between the upper body and the lower body. The force of advancing element **394** on projections **404** of insert **392** may inhibit the insert from rotating after expansion, thus inhibiting implant **386** from undesirably returning to an unexpanded position. In some embodiments, a spacer may be placed in gap **418** between upper body **388** and lower body **390** to remove the force on advancing element **394** and to ensure that implant **386** remains in an expanded position.

[**0193**] The cam device employed in the embodiment illustrated in FIGS. **20A-C**, as with all the disclosed embodiments of expandable implants, may also be employed in an articulating, or functional, implant. **FIG. 20D** depicts a cross-sectional view of an embodiment of an expandable, articulating implant with a cam insert. Insert **392** of implant **422** may be positioned in recess **398** of lower body **390**. Projection **424** (e.g., a post) may extend upward from the superior surface of lower body **390**. Insert **392** may rotate about projection **424**.

[**0194**] Superior surface **426** of upper portion **432** of upper body **388** may contact the bony surface of an adjacent vertebral body after insertion. At least a portion of inferior surface **428** of upper portion **432** may be concave. At least a portion of superior surface **430** of lower portion **434** may be convex. A convex portion of lower portion **434** may be, for example, circular or ellipsoidal in shape. In some embodiments, a circular convex portion may allow biomechanical motion that mimics motion of the human spine. In certain embodiments, an ellipsoidal convex portion may allow translation as well as rotation between, for example, an upper portion and a lower portion of an upper body of an implant. In some embodiments, upper portion **432** and lower portion **434** of upper body **388** may articulate with respect to each other (e.g., may form a functional joint). In certain embodiments, cam ramps **406** may extend downward from inferior surface **436** of lower portion **434** into lower body **390**. Advancing element **394** may push against projections **404** of insert **392**, thereby rotating the insert and causing the projections to engage cam ramps **406**. As projections **404** of insert **392** engage cam ramps **406** and the projections travel up the cam ramps, lower portion **434** and upper portion **432** of upper body **388** may be elevated with respect to lower body **390**. As with the other disclosed embodiments, stabilizers (e.g., captive pegs) may also be employed to inhibit separation of upper body **388** from lower body **390**.

[0195] After expansion of implant **422**, gap **418** may exist between lower portion **434** of upper body **388** and lower body **390**. A spacer (e.g., a shim) may be placed in gap **418** to inhibit implant **422** from returning to an unexpanded position. A spacer may be of various desirable shapes and/or sizes. For example, one side of a spacer may be thicker than another side of the spacer to achieve a desired lordotic angle of the implant. In some embodiments, implant **422** may be inserted in a spine upside down (e.g., upper body **388** oriented inferior to lower body **390**) such that an axis of rotation of the implant is located closer to the inferior body after insertion.

[0196] **FIGS. 21A and 21B** depict a perspective view of embodiments of c-shaped expandable, articulating implant **422** depicted in **FIG. 20D**. **FIGS. 21A and 21B** depict retention of stabilizers **412** in lower body **390**. As shown in **FIG. 21A**, superior surface **426** of upper portion **432** of upper body **388** and inferior surface **416** of lower body **390** may include teeth **438**. Teeth **438** may be of any regular or irregular desired size, shape, and/or spacing to promote retention of implant **422** between vertebrae after insertion. In some embodiments, teeth **438** may be randomly spaced protrusions or barbs. In certain embodiments, upper body **388** and/or lower body **390** may include openings to allow for bone ingrowth into an interior portion of implant **422**.

[0197] **FIG. 21A** depicts implant **422** before expansion. In some embodiments, no visible gap may exist between upper body **388** (or upper portion **432**) and lower body **390** of implant **422**. Thus, a height of implant **422** before expansion may be a minimal height of the implant (e.g., the implant may not be able to articulate before expansion). In some embodiments, a visible gap may exist between upper body **388** (or upper portion **432**) and lower body **390** of implant **422**. Thus, a separation distance between upper body **388** (or upper portion **432**) and lower body **390** of implant **422** may increase during expansion. **FIG. 21B** depicts fully expanded implant **422** (teeth are not shown for clarity) after advancement of advancing element **394**. In some embodiments, advancing element **394** may be a screw (e.g., a set screw). In certain embodiments, advancing element **394** may be positioned on a side (e.g., posterior side) of implant **422** (e.g., for a TLIF application). In certain embodiments, advancing element **394** may be positioned on an end of implant **422** (e.g., for a PLIF application).

[0198] Implant **422** may be fully expanded when platform **440** of cam ramps **406** rests on a superior surface of insert **392** (e.g., on a superior surface of projections **404** of the insert). In some embodiments, articulation of upper portion **432** with lower portion **434** may be determined by a degree of convex curvature of inferior surface **428** of upper portion **432** and superior surface **430** of lower portion **434** and/or a relative height (and depth) of complementary convex/concave contacting surfaces of the upper portion and the lower portion. In certain embodiments, stabilizers **442** may be used to align upper portion **432** with lower portion **434** of upper body **388** and/or to retain the upper portion on the lower portion and/or to limit articulation between the upper portion and the lower portion. As depicted in **FIG. 21B**, stabilizers **442** may be coupled to lower portion **434** of upper body **388** and reside in openings **444** of upper portion **432**. In some embodiments, stabilizers **442** may be coupled to upper portion **432**.

[0199] **FIG. 22** depicts an embodiment of a portion of an expandable implant. In the embodiment depicted in **FIG. 22**, insert **446** includes four cam ramps **448**. In other embodiments, an insert may include fewer (e.g., 2 or 3) or more (e.g., 5 to 12 or more) cam ramps. In contrast to the embodiment depicted in **FIG. 21**, in which the cam ramps are a part of the upper body of the implant and are stationary during expansion of the implant, cam ramps **448** may rotate as advancing element **394** rotates insert **446**. In some embodiments, advancing element **394** may rotate insert **446** until an inferior surface of extensions **450** of upper body **452** rest on a superior surface (e.g., a platform) of cam ramps **448**, as depicted in **FIG. 22**. Thus, the portion of the insert depicted in **FIG. 22** may be used without a spacer to achieve a fixed separation distance between an upper body and a lower body of an implant. In some embodiments, a spacer may be used to provide extra stability and/or to reduce force exerted on cam ramps **448** of insert **446**. In certain embodiments, a spacer may be used to achieve a separation distance less than the fixed separation distance determined by a cumulative height of cam ramps **448** and extensions **450** of upper body **452**.

[0200] In some embodiments, one or more cam ramps may be positioned on an inferior surface of an upper body or a superior surface of a lower body of an implant. **FIG. 23** depicts an embodiment of an upper body of an implant. Upper body **464** may include cam ramps **406**. Advancement of an insert up a curved and/or inclined surface of cam ramps **406** may determine an expansion height of an implant (e.g., a separation distance between an upper body and a lower body of the implant). Stabilizers **466** may allow upper body **464** and a lower body of the implant to remain coupled during and after expansion of the implant. In some embodiments, stabilizers **466** may limit a height of an implant and/or a separation distance between an upper body and a lower body of the implant. Opening **468** of upper body **464** may allow bone graft material to be packed inside the implant.

[0201] In some embodiments, a spacer and an insert may include complementary portions that allow a spacer to be coupled to an implant (e.g., reversibly or irreversibly locked into place between an upper body and a lower body of the implant). **FIG. 24A** depicts a perspective view of an embodiment of spacer **470** coupled to insert **472**. **FIG. 24B** depicts a perspective view of spacer **470**. **FIG. 24C** depicts a perspective view of another spacer **474**. Spacers **470**, **474** may include protrusion **476**. In some embodiments, protrusion **476** of spacers **470**, **474** may be press fit or loose fit into a recess of a member of an implant (e.g., an insert). Fitting (e.g., snapping) protrusion **476** into a recess may advantageously provide a tactile indication to a surgeon that spacer **470**, **474** is properly placed and secured in an implant.

[0202] Spacers may have various features designed to facilitate insertion in an implant, retention in an implant, and/or removal from an implant. For example, spacer **470** shown in **FIG. 24B** may include recess **478**. Recess **478** may allow spacer **470** to be grasped for insertion in an implant and/or for removal from an implant. Spacer **474** shown in **FIG. 24C** may include lip **480**. Lip **480** may facilitate (e.g., guide) insertion of spacer **474** into a gap in an implant. In some embodiments, lip **480** may promote retention of spacer **474** in a gap between an upper body and a lower body of an implant. In some embodiments, a spacer may include a lip

around a superior and/or inferior surface of the entire spacer. In certain embodiments, a spacer may include a lip around a superior and/or inferior surface of a portion (e.g., one side) of a spacer. In some embodiments, a lip may be an external lip or an internal lip. In certain embodiments, a lip on an inferior surface of an upper body or a superior surface of a lower body of an implant may be used together with or instead of a lip on a spacer.

[0203] **FIG. 24D** depicts a perspective view of an embodiment of an insert. Insert **472** may include recess **482**. Recess **482** may be complementary to a protrusion of a spacer (e.g., protrusion **476** of spacers **470**, **474**). As depicted in **FIG. 24A**, protrusion **476** of spacer **470** may fit securely in recess **482** of insert **472**, inhibiting backout of the spacer after the spacer has been fully inserted. **FIG. 24E** depicts a perspective cross-sectional view of spacer **474** with lip **480** used to maintain a separation distance between insert **472** and an upper body of an implant.

[0204] **FIG. 25** depicts a perspective view of an embodiment of an expanded c-shaped implant during insertion of a spacer. Implant **484** may include upper body **486** and lower body **488**. Spacer **490** may be inserted in gap **492** between upper body **486** and lower body **488**. Opening **494** in upper body **486** may allow bone graft material to be packed inside implant **484**.

[0205] **FIG. 26A** depicts a perspective view of an embodiment of an expanded c-shaped articulating implant during insertion of a spacer. Implant **496** may include upper body **498** and lower body **500**. Upper body **498** may include upper portion **502** and lower portion **504**. Spacer **506** may be inserted in gap **508** between lower body **500** and lower portion **504** of upper body **498**. In some embodiments, stabilizers **510** may extend from lower portion **504** through openings **512** in upper portion **502** of upper body **498**. A size and/or shape of stabilizers **510** and/or openings **512** may allow a desired amount of articulation between upper portion **502** and lower portion **504** of upper body **498** (e.g., about a convex portion of the superior surface of lower portion).

[0206] **FIGS. 26B and 26C** depict perspective views of implant **496** after spacer **506** has been fully inserted. **FIG. 26B** depicts implant **496** with upper portion **502** angled relative to lower portion **504** of upper body **498**. Superior surface of lower portion **504** may include a convex portion (e.g., substantially ellipsoidal or round) that articulates with a concave portion of inferior surface of upper portion **502** to allow translation, rotation, anterior/posterior bending, and/or lateral bending of upper portion **502** relative to lower portion **504** of upper body **498**, subject to size, shape, and orientation of stabilizers **510** and openings **512**. **FIG. 26C** depicts implant **496**, with details of stabilizers **510** and openings **512** visible. Stabilizers **510** may be shaped and oriented such that upper portion **502** is angled onto lower portion **504** during assembly of implant **496**. Angled portions of stabilizers **510** and openings **512** may allow desired ranges of translational and/or rotational motion of upper portion **502** relative to lower portion **504** while inhibiting separation of the upper portion from the lower portion.

[0207] **FIG. 27** depicts a perspective view of an embodiment of a c-shaped expandable implant with a spacer. Implant **514** may include spacer **516** between upper body **518** and lower body **520**. Spacer **516** may have a larger profile than upper body **518** and lower body **520** of implant **514**. Thus, a portion of spacer **516** may protrude from a circumference of implant **514**. A spacer with a larger profile than an upper body and/or lower body of an implant may provide torsional support and/or facilitate insertion of the spacer during a surgical procedure.

[0208] **FIG. 28A** depicts a side view of an embodiment of a facet replacement device. Facet replacement device **522** may include upper pedicle screw **524** and lower pedicle screw **526**. Rod **528** may be retained in head **530** of upper pedicle screw **524** and head **532** of lower pedicle screw **526**. Rod **528** may have washer-type ends **534** that allow for posterior compression, but not extension.

[0209] **FIG. 28B** depicts a side view of an embodiment of a facet replacement device. Facet replacement device **536** may include rod **538**. Rod **538** may include a single washer-type end **540** on lower end **542**. Head **544** of upper pedicle screw **546** may have threaded locking screw **548**, as shown in the cross section in **FIG. 28C**. Threaded locking screw **548** may hold rod **538** in place and inhibit head **544** of pedicle screw **546** from swiveling while allowing rod **538** to rotate and translate through the head of the pedicle screw.

[0210] **FIG. 28D** depicts a cross-sectional view of an embodiment of a head-locking insert that may be used in conjunction with a pedicle screw having a locking-type head. In some embodiments, insert **550** may have a similar shape to head **544** of pedicle screw **546**. Insert **550** may be of solid construction, with opening **554** defined therethrough. In some embodiments, opening **554** may substantially align with the opening defined through head **544** of pedicle screw **546**. As set screw **556** is engaged into head **544** of pedicle screw **546**, force is applied to the top of insert **550** and is transferred to the bottom of the head. The force locks head **544** of pedicle screw **546**, as with conventional locking pedicle screws; however, the force is not transferred to rod **538**. With no force transferred to rod **538**, the rod may rotate in and translate through head **544** of the pedicle screw. Alternatively, a shorter insert **550** (e.g., threaded only part way into head **544**) may be used to inhibit a transfer of force to the bottom of the head such that the pedicle screw head undergoes multi-axial motion while retaining the rod in the head.

[0211] **FIG. 29A** depicts a side view of an embodiment of a facet replacement device. Facet replacement device **558** may include upper pedicle screw **560** and lower pedicle screw **562**. Rod **564** may be retained within heads of pedicle screws **560**, **562**. Both pedicle screws **560**, **562** may be secured with locking screws **566** that inhibit heads **568**, **570** of the pedicle screws from swiveling while allowing rotation and/or translation of rod **564**. Rod **564** may include rod members **572**, **574** coupled via ball joint **576**. Ball joint **576** may allow for a generally upward rotation, away from the bony surfaces of the vertebrae to which pedicle screws **560**, **562** are secured, but inhibit a generally downward rotation, which would bring the ball joint in contact with the vertebrae to which the pedicle screws are secured.

[0212] **FIGS. 29B and 29C** depict side and top views, respectively, of an embodiment of a facet replacement device. Facet replacement device **578** may include upper pedicle screw **580** and lower pedicle screw **582** having post-type heads **584**, **586**. Rather than the previously described rod, retaining plate **588** may be included. Elon-

gated openings **590** may be defined through retaining plate **588** positioned on the post-type heads **584**, **586** of pedicle screws **580**, **582**. Post-type heads **584**, **586** may be allowed to move in elongated openings **590**, providing a limited range of motion. Employing cushioning pads **592** made of rubber or other elastomeric biocompatible material may dampen movement of retaining plate **588**. Post-type heads **584**, **586** may also include threaded or lockable caps **594** to inhibit dislocation of retaining plate **588** from the post-type heads.

[0213] **FIG. 29D** illustrates a pedicle screw having post-type head **584** used in conjunction with a pedicle screw having a locking or non-locking type head **598**. Retaining plate **588** may be formed with rod **600** on one end, which may be slidingly positioned through pedicle screw head **598**.

[0214] As shown in **FIGS. 29E and 29F**, post-type heads **604** of pedicle screws **606** used in conjunction with retaining plate **588** may also exhibit multi-axial motion. Post-type head **604** may be coupled to pedicle screw **606** with ball joint **608**. **FIG. 29F** shows spacer **610** disposed below retaining plate **588**. Spacer **610** may allow for rotation of ball joint **608**.

[0215] **FIG. 30** depicts facet replacement device **558** of **FIG. 29A** in place on the spinal column. Note that implant **612** has been posteriorly placed within the intervertebral space through the void created by the surgical removal of the natural facet joint. In addition, ball joint **576** may rotate in the posterior (upward) direction during posterior compression to inhibit impact upon the bony surfaces of the spine.

[0216] **FIG. 31A** depicts a perspective view of a portion of an embodiment of a facet replacement device. Facet replacement device **614** may include pedicle screw head **616**, pedicle screw **618**, lower saddle **620**, upper saddle **622**, and set screw **624**. Rod **626** may be positioned between lower saddle **620** and upper saddle **622**. Set screw **624** may secure lower saddle **620**, upper saddle **622**, and rod **626** in pedicle screw head **616** of facet replacement device **614**. In some embodiments, a diameter of a portion of rod **626** held between lower saddle **620** and upper saddle **622** may substantially the same diameter as other portions of the rod. For example, rod **626** may be of substantially constant diameter. In certain embodiments, a portion of rod **626** held between lower saddle **620** and upper saddle **622** may be reduced in diameter relative to other portions of the rod. **FIG. 31B** depicts a cross-sectional view of reduced diameter portion **628** of rod **626** positioned in pedicle screw head **616** of facet replacement device **614**.

[0217] **FIGS. 31B and 31C** depict perspective cross-sectional views of facet replacement device **614**. As shown in **FIGS. 31B and 31C**, rod **626** may have reduced diameter portion **628** positioned between lower saddle **620** and upper saddle **622**. Reduced diameter portion **628** of rod **626** may be secured in opening **630** formed by lower saddle **620** and upper saddle **622**. Rod **626** may be retained in a desired position between lower saddle **620** and upper saddle **622** by O-rings **632**. As depicted in **FIG. 31B**, O-rings **632** may reside in grooves **634** in rod **626**. A position of grooves **634** in rod **626** may be chosen to allow translation of the rod through opening **630** with O-rings **632** positioned in grooves **634**. O-rings **632** may be made of any biocompatible elastomeric material including, but not limited to, silicone. Grooves **634** may have any desirable cross-sectional shape including, but not limited to, rectangular, square, arcuate, or v-shaped.

[0218] As depicted in **FIGS. 31B and 31C**, opening **630** formed by lower saddle **620** and upper saddle **622** may have a diameter that exceeds a diameter of the portion of rod **626** (e.g., reduced diameter portion **628** held between the upper saddle and the lower saddle. With a diameter of opening **630** that exceeds a diameter of rod **626** held in the opening, the rod may be able to move relative to pedicle screw head **616** of facet replacement device **614**. In some embodiments, rod **626** may be able to translate and/or rotate with respect to pedicle screw head **616**. In certain embodiments, rod **626** may be able to rotate about axes parallel and/or perpendicular to a longitudinal axis of the rod. As depicted in **FIG. 31B**, rotation of rod **626** about an axis perpendicular to a longitudinal axis of the rod may result in tilting or angulation of the rod relative to pedicle screw head **616**. In some embodiments, movement of rod **626** in opening **630** may be cushioned by O-rings **632**.

[0219] **FIG. 32** depicts a perspective view of a portion of an embodiment of a facet replacement device that may be used in a 2-level spinal stabilization procedure. Facet replacement device **636** may include pedicle screw head **616**, pedicle screw **618**, lower saddle (not shown), upper saddle **622**, and set screw **624**. Retainer **638** may hold rod **626** in opening **630** formed by the lower saddle and upper saddle **622**. Opening **630** may be sized as noted with respect to facet replacement device **614** (**FIG. 31**) to allow rotational and/or translational motion of rod **626** in the opening. O-ring **632** may cushion movement of rod **626** in opening **630**. Rod **626** used with facet replacement device **636** may have a substantially uniform diameter. That is, facet replacement device **636** does not require a portion of rod **626** to have a reduced diameter. Therefore, pedicle screw head **616** may be placed at any desired position along a length of rod **626**. Adjustable positioning of pedicle screw head **616** along a length of a rod of uniform diameter may allow the use of the facet replacement device **636** in a two-level or multi-level spinal stabilization procedure.

[0220] Retainer **638** may be a c-shaped element with opening **640**. A diameter of rod **626** may exceed a length of opening **640**. Thus, after retainer **638** has been snapped onto rod **626**, the retainer may remain securely on the rod. Rotational motion of rod **626** in opening **630** may be limited by relative diameters of rod **626** and opening **630**. Translational motion of rod **626** through opening **630** may be limited by placement of retainers **638** on either side of pedicle screw head **616**.

[0221] **FIG. 33A** depicts a perspective view of an embodiment of a portion of a facet replacement device including a plate rather than a rod. Facet replacement device **642** may include pedicle screw **618**, pedicle screw head **644**, and fastener **646**. In some embodiments, fastener **646** may be, for example, a screw. Plate **648** may be coupled between pedicle screw head **644** and fastener **646**. In some embodiments, plate **648** may have a T-shaped cross section. In certain embodiments, a T-shaped cross section may provide a lower profile than a rod, advantageously requiring less space at a surgical site. Size, thickness, and dimensions of a T-shaped cross section may vary as needed for strength, stability, and surgical access. For example, stem portion **650** of plate **648** may be of various heights.

[0222] **FIG. 33B** depicts a cross-sectional view of facet replacement device **642** including plate **648**. Plate **648** may be coupled to pedicle screw head **644** between lip **652** of the pedicle screw head and lip **654** of fastener **646**. In some embodiments, fastener **646** may have a threaded portion that engages a threaded portion inside pedicle screw head **644** (threaded portions not shown). In some embodiments, spacer **656** may be positioned between pedicle screw head **644** and fastener **646**. In certain embodiments, spacer **656** may fit inside opening **658** in plate **648** (e.g., between the plate and fastener **646**). A diameter of opening **658** may be sized such that plate **648** can rotate and/or translate relative to pedicle screw head **644**. In some embodiments, spacer **656** may be a bushing or an O-ring. Spacer **656** may be made of elastomeric materials such as, but not limited to, silicone. Spacer **656** may cushion and/or dampen movement of plate **648** relative to pedicle screw head **644** and/or fastener **646** to allow smoother biomechanical motion after insertion in a human spine.

[0223] **FIG. 34A** depicts a perspective view of an embodiment of a portion of a facet replacement device with a pedicle screw that retains mobility after a rod is secured. Facet replacement device **660** may include pedicle screw head **662**, pedicle screw **664**, upper saddle **666**, and set screw **624**. Ball joint **668** of pedicle screw **664** may rest in base **670** of pedicle screw head **662**. A portion of rod **626** may contact ball joint **668** of pedicle screw **664**. In some embodiments, rod **626** may have a reduced diameter portion that resides in pedicle screw head **662** and contacts ball joint **668** of pedicle screw **664**. In other embodiments, rod **626** may have a substantially constant diameter.

[0224] In some embodiments, an outside portion of upper saddle **666** and an inside portion of pedicle screw head **662** may be complementarily threaded (not shown), such that the upper saddle may be threaded into the head. In certain embodiments, pedicle screw head **662** may be threaded such that upper saddle **666** may be threaded a limited distance into the head (e.g., upper saddle **666** does not contact base **670**). Set screw **624** may inhibit backout of upper saddle **666** from pedicle screw head **662**. A length of threading in pedicle screw head **662** may be chosen such that upper saddle **666** may be fully secured in the head without tightening rod **626** onto ball joint **668**. Thus, with rod **626** fully secured in head **662**, the rod and pedicle screw **664** both retain rotational mobility. In some embodiments, O-rings **632** may be positioned on rod **626** on both sides of upper saddle **666**. Translation of rod **626** in pedicle screw head **662** may be limited by the placement of O-rings **632** on the rod and/or by a retainer.

[0225] **FIGS. 34B and 34C** depict cross-sectional views of facet replacement device **660**. As shown in **FIGS. 34B and 34C**, reduced diameter portion **628** of rod **626** may be held loosely between upper saddle **666** and ball joint **668** of pedicle screw **664**. With threading (not shown) inside pedicle screw head **662** extending only partially down toward the base of the pedicle screw head, upper saddle **666** may secure rod **626** in the pedicle screw head without causing the rod to bear down on ball joint **668** of pedicle screw **664**. With rod **626** and ball joint **668** able to move freely, the rod may retain rotational (and/or translational) mobility after insertion of facet replacement device **660** in a human spine.

[0226] In some embodiments, instruments may be used to install elements of an implant in a spine. Instruments may also be used to position (e.g., rotate, translate, expand) elements of an implant in vivo. In certain embodiments, a single instrument may be used to perform multiple steps of a spinal procedure. For example, an instrument may be used to position an implant in an intervertebral space and to actuate an expansion member to expand the implant in the intervertebral space.

[0227] **FIG. 35** depicts instrument **700** for use in installing and expanding an implant. Instrument **700** may have proximal end **702** and distal end **704**. Instrument **700** may include outer shaft **706**, driver **708**, holding device **710**, and handle **712**. As used herein, "shaft" includes elongated members having various regular and irregular cross-sections, including, but not limited to, round, square, rectangular, hexagonal, or irregular. A shaft may be solid or hollow.

[0228] Instrument **700** may include thumbwheel **714**. Thumbwheel **714** may be coupled to driver **708**. Thumbwheel **714** may act as a control member for driver **708**. As used herein, "control member" includes any element that is operable by a user to control position, orientation, or motion of another element. Other examples of control members include, but are not limited to, a knob, a lever, or a button. In some embodiments, a control member may be operated using a tool.

[0229] In one embodiment, thumbwheel **714** may be fixedly coupled to driver **708** such that driver **708** rotates as thumbwheel **714** is rotated. In another embodiment, thumbwheel **714** may be threadably coupled to driver **708** such that driver **708** translates along its axis when thumbwheel **714** is rotated.

[0230] **FIG. 36** depicts a detail view of distal end **704** of instrument **700**. Holding device **710** may hold an implant during insertion of the implant between two vertebrae. As used herein, "holding device" includes any element or combination of elements that may be used to hold, support, or grip another element, such as an implant, spacer, or insert. Examples of holding devices include, but are not limited to, a clamp, a clip, or a threaded rod. In some embodiments, a holding device may include one or more opposing holding elements. For example, as shown in **FIG. 36**, holding device **710** may include holding arms **716**. Holding arms **716** may be hinged to base **718**. Base **718** may be coupled to outer shaft **706**. Holding arms **716** may be coupled to spring clip **720**. Spring clip **720** may maintain holding arms **716** in a closed position (as shown in **FIG. 36**) unless at least a predetermined amount of separation force is applied to instrument **700** and an implant.

[0231] Lobes **722** on holding arms **716** may engage complementary surfaces (e.g., notches, grooves) on an implant or spacer. Engagement between lobes and complementary surfaces on an implant or spacer may promote engagement between an instrument and an implant or a spacer. Holding arms may include other engaging elements, such as tabs, grooves, or pins. In certain embodiments, the inner surfaces of holding arms on a holding device may be flat. The inner surfaces of holding arms may be textured or smooth.

[0232] In some embodiments, spring clip **720** may be at least partially made of a shape memory alloy. Spring clip

720 may be actuated by allowing the spring clip to reach a predetermined temperature. When spring clip 720 is actuated, the spring clip may urge holding arms 716 outwardly from a closed position. In one embodiment, spring clip 720 may be actuated by body heat. In another embodiment, spring clip 720 may be actuated by electrical current carried by insulated conductors in or on the instrument.

[0233] Base 718 of holding device 710 may allow for passage of driver 708. Driver 708 may include inner shaft 724 and driver head 726. Inner shaft 724 may be coupled with thumbwheel 714 (shown in FIG. 35). Driver head 726 may have any of various forms suitable for actuating (e.g., rotating, advancing) a portion of an expansion member or insert. In one embodiment, a driver head may include external threads that can engage internal threads on a portion of an implant. Other examples of driver head types include, but are not limited to, slotted, Phillips, square, hexagonal, or hexalobular. In some embodiments, the driver head may engage a set screw in the implant.

[0234] FIG. 37 depicts a detail view of proximal end 702 of instrument 700. Handle 712 may include grip portion 728 and end portion 730. End portion 730 may include a surface suitable for receiving impact by another instrument. Slot 732 may be provided between grip portion 728 and end portion 730. Thumbwheel 714 may partially reside in slot 732. In certain embodiments, surfaces of thumbwheel 714 may have knurls, ribs, or similar characteristics to facilitate rotation of the thumbwheel.

[0235] Handle 712 may protect portions of the instrument from damage during use. For example, handle 712 may protect against damage to threads on inner shaft 724 when another instrument is used to strike instrument 700. In one embodiment, a transverse cross section of handle 712 at slot 732 may be generally rectangular, as shown in FIG. 37. A rectangular cross section at slot 732 may allow a user to access a sufficient portion of thumbwheel 714 to turn the thumbwheel, but still protect thumbwheel 714 and inner shaft 724 (shown in FIG. 35) from damage. A transverse cross section of handle at slot 732 may be shapes other than rectangular, such as square, oval, hexagonal, or irregular.

[0236] Although the protecting portions of instrument 700 shown in FIG. 37 are an integral part of handle 712, a protector in other embodiments may be a separate component from the handle. In certain embodiments, a protector may be removable from an instrument so that a user may access a driver and/or control member.

[0237] FIG. 38 depicts implant 484 held by instrument 700 after driver 708 has been operated to expand the implant. When implant 484 is initially coupled to holding device 710, lobes 722 of holding arms 716 may engage in holding recesses 733 on either side of lower body 488. Engagement of lobes 722 in holding recesses 733 may help maintain a position of the implant during insertion and/or expansion of the implant. Engagement of lobes 722 within holding recesses 733 may place implant 484 in a desired alignment for insertion between the vertebrae and engagement with an expansion tool. The location of holding recesses 733 may be selected according to the approach to be used (e.g., TLIF, PLIF) and the location of an expansion member of the implant. For example, for a TLIF implant, holding recesses may, in some embodiments, be located near both longitudinal ends of the implant.

[0238] In some embodiments, driver head 726 may engage an insert (e.g., insert 472 depicted in FIG. 24D) of an implant. In other embodiments, driver head 726 may engage a set screw (e.g., advancing element 394 depicted in FIG. 21B) of an implant, which may in turn actuate (e.g., translate or rotate) an insert. Actuation of driver 708 may expand implant 484 to the expanded position shown in FIG. 38. After implant 484 has been expanded, instrument 700 may be pulled away from the surgical site with enough force to overcome the closing force of holding device 710, thereby spreading holding arms 716 apart to allow separation of instrument 700 from implant 484 and removal of the instrument from the site. In another embodiment, a release mechanism can be used to spread holding arms 716 apart.

[0239] In some embodiments, an inserter for a spacer may be used in combination with an implant holder and/or a driver for an expansion member. In some embodiments, an inserter may include a guide that engages a portion of an implant holder. The guide may be used to position the spacer near a desired location near the implant and/or to insert the spacer in the implant. Examples of guides include, but are not limited to, a fork, a hook, a ring, a spring clip, a tab, a rail, or a groove. In some embodiments, an inserter may be used to guide a spacer to a location near an implant, such as at a gap between an upper body and a lower body of the implant. In certain embodiments, an inserter may be advanced on a shaft to fully insert a spacer between upper and lower bodies of an implant.

[0240] FIG. 39 depicts instrument 736 including inserter 738 for holding spacer 470. Inserter 738 may include inserter shaft 740, inserter handle portion 742, spacer holding device 744, and guide fork 746. Guide fork 746 may engage outer shaft 706. Inserter handle portion 742 may include bend 748. Bend 748 may allow a proximal portion of inserter handle portion 742 to be positioned close to handle 712 so inserter handle portion 742 may be manipulated in a relatively small incision.

[0241] In the embodiment shown in FIG. 39, inserter 738 may be easily separated from outer shaft 706. Thus, the surgeon could first insert and expand the implant, then introduce inserter 738 into the incision. In other embodiments, an inserter may be permanently coupled to the rest of an instrument.

[0242] FIG. 40 depicts a detail view of implant 484 held by instrument 736, as seen from the upper side of the implant. FIG. 41 depicts a detail view of implant 484 held by instrument 736, as seen from the lower side of the implant. In FIGS. 40 and 41, spacer 470 is partially inserted between upper body 486 and lower body 488 of implant 484.

[0243] In the embodiment shown in FIG. 40, spacer holding device 744 includes holding arms 716 that are fixed with respect to base 718. Each of holding arms 716 may include ball detent mechanism 750. FIG. 42 depicts a detail view of ball detent mechanisms 750. Detent springs 752 may provide a desired amount of clamping force on spacer 470. In other embodiments, a spacer holding device may include hinged arms that are similar to those of holding device 710 shown in FIG. 36.

[0244] Referring again to FIG. 36, it is noted that spring clip 720 may serve as a biasing element to maintain a holding force on the implant. As used herein, a "biasing

element" includes any element that biases a member of a device toward one position. A biasing element may be a separate element of a holding device or integral to another element of the device (e.g., a holding arm). Biasing elements include, but are not limited, resilient members such as metal springs or elastomeric bands. Additional embodiments of holding devices with biasing elements are described below.

[0245] **FIG. 43** depicts holding device **710** including holding arms **716** hinged to base **718** and connected by coil spring **754**. In one embodiment, coil spring **754** is spot welded to the holding arms. **FIG. 44** depicts an alternate embodiment of holding device **710** that includes spring arms **755**. In certain embodiments, spring arms **755** may be made of **302**, **314**, or **316** stainless steel.

[0246] **FIG. 45** depicts a holding device **710** having holding arms **716** made of a shape memory alloy. Holding arms **716** may be actuated by allowing the holding arms to reach a predetermined temperature. When holding arms **716** are actuated, the holding arms **716** may move outwardly from a closed position. Holding arms **716** may be actuated using body heat, insulated electrical current, or another heat source.

[0247] **FIG. 46** depicts an alternate embodiment of a holding device. Holding device **710** may engage a top surface of implant **484**. Notches **756** in implant **484** may allow the outer surfaces of holding arms **716** to be flush with the outer surfaces of upper body **486** and lower body **488**, facilitating insertion of implant **484** between the vertebrae. In another embodiment, a holding device may engage top and bottom surfaces of a spacer for an expandable implant.

[0248] **FIGS. 47A-47D** depict a top view of an expandable implant during expansion of the implant and insertion of a spacer between upper and lower bodies of the implant. **FIG. 47A** depicts implant **484** on instrument **700** before expansion of implant **484**. Driver head **726** of driver **708** may be advanced into a tapped through hole in lower body **488** of implant **484** until the tip of driver head **726** engages insert **472**. Advancement of driver head **726** may rotate insert **472** to expand implant **484** between the vertebrae (see **FIG. 47B**). Holding device **710** may exert sufficient force on implant **484** to maintain the implant in a fixed position during actuation of driver **708**.

[0249] Guide fork **746** of inserter **738** (shown in **FIG. 39**) may be placed on outer shaft **706**. Inserter **738** may be advanced on outer shaft **706** to move spacer **470** into position between the upper body and the lower body of implant **484** (**FIG. 47C**). Inserter **738** may be advanced until spacer **470** is fully installed between the upper and lower bodies of implant **484** (**FIG. 47D**). Once spacer **470** is fully installed, instrument **700** and inserter **738** may be withdrawn from the surgical site, either together or one at a time.

[0250] In certain embodiments, an instrument may include a movable element for maintaining a holding device in a closed position. **FIG. 48** depicts a distal end of instrument **758** including slide **760**. Slide **760** may include projections **762**. Projections **762** may define notches **764** at a distal end of slide **760**. Bottom surfaces **766** of notches **764** may act as stops against axial motion of holding device **710**. Spring clip **720** may bias holding arms outwardly from the closed position shown in **FIG. 48**. When projections **762** are adjacent to holding arms **716** of holding device **710** (as shown in **FIG. 48**, for example), the projections may inhibit outward rotation of the holding arms, thereby keeping the holding device in a closed position. When slide **760** is retracted from holding arms **716** (e.g., by moving the slide proximally with respect to the holding device), the holding arms may move apart under the force of spring clip **720** to allow release of an implant from the instrument.

[0251] Other arrangements may be used to maintain a holding device in a closed position. For example, a slide may include a cylindrical sleeve that passes over the outer sides of a holding device. The inner wall of the sleeve may inhibit the holding arms from moving out of a closed position.

[0252] In some embodiments, a holding device for an implant or spacer may be coupled to a control member, such as a thumbwheel or lever. The control member may be operated to selectively hold and release the implant or spacer. **FIG. 49** depicts a perspective view of inserter **768** including holding device **710**. Holding arms **716** of holding device **710** may be coupled to coil spring **754** in a similar manner as described above relative to **FIG. 43**. Coil spring **754** may bias holding arms **716** into a closed position on a spacer. Cable **770** may extend between thumbwheel **714** and holding arms **716** through hollow shaft **772**. Thumbwheel **714** may be operated to draw cable **770** away from distal end **704** of instrument **768**. Cable **770** may act against the force of coil spring **754** to open holding arms **716**, thereby allowing the spacer to be released from the holding device. Inserter **768** may include guide fork **746**. Guide fork **746** may slidably engage a portion of an implant holder (e.g., the outer shaft shown in **FIG. 35**) to facilitate positioning of the spacer prior to release of the spacer. In another embodiment, a control member may be connected to a locking slide to selectively lock and release a holding device.

[0253] **FIGS. 50A and 50B** depict instrument **774** including a pair of rods for inserting implant **776** having spacer **778**. Bottom rod **780** and top rod **782** of instrument **774** may be commonly supported on base member **784**. Bottom rod **780** may include threaded portion **781**. Threaded portion **781** may engage in a tapped hole in lower body **786** of implant **776**. In one embodiment, tab **787** on spacer **778** may engage a channel or groove in top rod **782** to help guide and/or align spacer **778**. Top rod **782** may be used to guide spacer **778** to a gap between upper body **788** and lower body **786**, as shown in **FIG. 50A**. Once spacer **778** is in position for insertion between upper body **788** and lower body **786** of implant **776**, top rod **782** may be repositioned in base member **784** such that a distal end of top rod **782** is behind spacer **778**, as shown in **FIG. 50B**. Top rod **782** can be used to advance spacer **778** between upper body **788** and lower body **786**. In certain embodiments, top rod **782** may be used to impact spacer **778** between upper body **788** and lower body **786**.

[0254] **FIG. 51** depicts alternative embodiment of an instrument **790** including driver **708** with driver head **726**. Driver head **726** may include threaded portion **792**. In one embodiment, threaded portion **792** may be threaded into a tapped through opening in an upper or lower body of an implant. As threaded portion **792** of driver head **726** is advanced through the opening, a distal tip of driver head **726** may actuate (e.g., translate, rotate) an insert. Instrument **790** may include outer shaft **706** and holding device **710**. In certain embodiments, holding device **710** of instrument **790**

may be shaped to match a contour of an implant or a spacer. In one embodiment, holding device **710** may have an arcuate shape. Driver head **726** may be actuated by thumbwheel **714**. Instrument **790** may include removable cover **794**. Removable cover **794** may protect thumbwheel **714** from damage during use.

[**0255**] **FIGS. 52A and 52B** depict an alternate embodiment of an instrument for placing and expanding an implant and inserting a spacer. Instrument **796** may include base member **798**. Base member **798** may carry holder rod **800**, driver rod **802**, and inserter rod **804**. Holder rod **800** may threadably engage a tapped hole in lower body **786** to support implant **806**. Driver rod **802** may threadably engage through hole **808** in lower body **786**. Driver rod **802** may be advanced to actuate insert **810** to increase a separation distance between lower body **786** and upper body **788**, thereby expanding implant **806**. Spacer **812** may be threadably coupled to inserter rod **804**. Inserter rod **804** may be guided on base member **798** to advance spacer **812** between lower body **786** and upper body **788**. Holder rod **800**, driver rod **802**, and inserter rod **804** may be rotated to disengage the rods from implant **806**. The rods may be removable from base member **798**. In some embodiments, inserter rod **804** may be loaded into an open channel in base member **798**.

[**0256**] It will be understood that any or all of the threaded tips on rods **800**, **802**, and **804** may be replaced by other holding devices including, but not limited to, the holding devices shown in **FIGS. 36-44**. It will be further understood that in other embodiments, an instrument may omit one or more of the implant holder, the expansion driver, or the spacer inserter. For example, an instrument may include only an implant holder and an expansion driver, or only an implant holder and a spacer inserter.

[**0257**] In an embodiments, a driver for components of a spinal system may include a feature for locking with an element of a spinal system. **FIG. 53** depicts a schematic view of a proximal end of head **816** on fastener **818** for a spinal system. Head **816** may include side hole **820**. A fastener for a spinal system may include, but is not limited to, a set screw, a pedicle screw, or a threaded top for a polyaxial screw. **FIG. 54** depicts a schematic view of a distal end of driver **822**. Driver **822** may include sleeve **824** having socket **826**. Driver **822** may include lock element **828**. Lock element **828** may retractably extend into socket **826**. Button **830** on sleeve may be manually operated to retract lock element **828** from socket **826**. When sleeve **824** of driver **822** is placed on head **816** of fastener **818**, lock element **828** of driver **822** may engage in side hole **820**.

[**0258**] Engagement of lock element **828** in side hole **820** may inhibit axial separation of driver **822** from head **816** of fastener **818**. A locking element may reduce a risk of a fastener disengaging from a tool during use. In certain embodiments, lock element **828** may be used to capture a break-off head of a top for a polyaxial screw. In certain embodiments, driver **822** may be coupled with a detachable handle. In some embodiments, driver **822** may be used with a power tool (e.g., a drill).

[**0259**] In an embodiment, an implant (e.g., for an expanse cage, dynamic cage) may be placed in a human spine using a posterior approach to a diseased lumbar disc. In some embodiments, the surgeon may use the same approach as is typically used in a microdiscectomy, TLIF, or minimally invasive posterior exposure. Such procedures involve removing some of the lamina and the medial facet joint. More bone, including the spinous process and the entire facet may be removed if indicated.

[**0260**] The vital structures involved with the posterior approach are the nerve roots. The exiting root is the root that leaves the spinal canal just cephalad (above) the disc, and the traversing root leaves the spinal canal just caudad (below) the disc. The thecal sac houses the other nerve roots that exit lower. The triangle between the exiting nerve root and the traversing nerve root (Pambin's or Cambin's triangle) is the extent of the access to the disc. The triangle may be enlarged by retracting the traversing nerve root medially. If retraction is done too vigorously, however, retraction injuries may occur and serious complications such as nerve root sleeve tear may result, causing spinal fluid leakage, nerve root injury, avulsion and even spinal cord injury.

[**0261**] After the lamina has been removed and the traversing root retracted medially, the posterior annulus may be exposed. While the root is retracted gently, the surgeon may create an annulotomy. Pituitary forceps may be used to remove disc material. Successively larger forceps may be used until an adequate amount of disc is removed. Care should be taken not to penetrate the anterior annulus and enter the retroperitoneal space. After adequate disc material has been removed, the end plates may be prepared using osteotomes to remove posterior ostephytes and cutting curettes to decorticate the end plates. The object of end plate preparation is to remove the cartilaginous tissue and score the cortical bone without completely removing the cortical strength.

[**0262**] Once the end plates have been prepared, a trial may be placed in the disc space. The trial should be snug without significantly distracting the end plates. An unexpanded implant of approximately the same size as the trial may then be inserted into the disc space. Once positioned anterior to the nerve roots, the implant may be expanded. In some embodiments, a spacer may be introduced following expansion of the implant. The spacer may include a protrusion, groove, or similar element that snaps or locks into place to provide a tactile sensation as the spacer reaches a fully inserted position. A tactile sensation may provide the surgeon with positive feedback that the spacer is in place. In certain embodiments, the implant may be further rotated within the space after the spacer is introduced, according to the preference of the surgeon.

[**0263**] An expandable implant (e.g., an expanse cage or dynamic device) may allow a larger device to be placed into the disc from a posterior approach without over distracting the nerve roots or the ligaments. In some embodiments, the implant may be expanded without any over distraction. This advantage may allow the surgeon to tension the annulus, avoid resection of the anterior longitudinal ligament, and decompress the nerve roots without requiring over distraction and the attendant possibility of injury to the nerves and ligaments. For reasons outlined above, many patients are not suitable candidates for an anterior approach. In one embodiment, an implant of less than about 12 mm in width is placed posteriorly without over distraction. In another embodiment, an implant of less than about 10 mm in width is placed posteriorly without overdistraction.

[0264] In an embodiment, an expandable implant may expand throughout its entire width. In some embodiments, an expandable implant may be used for posterior disc height restoration without increasing lordosis. In other embodiments, an expandable implant may be used for posterior disc height restoration with increasing lordosis. In certain embodiments, an implant may be placed using a TLIF approach. Although some of the description herein relates to a PLIF or TLIF approach, it will be understood that implants as described herein may be placed using an anterior approach.

[0265] In this patent, certain U.S. patents, U.S. patent applications, and other materials (e.g., articles) have been incorporated by reference. The text of such U.S. patents, U.S. patent applications, and other materials is, however, only incorporated by reference to the extent that no conflict exists between such text and the other statements and drawings set forth herein. In the event of such conflict, then any such conflicting text in such incorporated by reference U.S. patents, U.S. patent applications, and other materials is specifically not incorporated by reference in this patent.

[0266] Further modifications and alternative embodiments of various aspects of the invention will be apparent to those skilled in the art in view of this description. Accordingly, this description is to be construed as illustrative only and is for the purpose of teaching those skilled in the art the general manner of carrying out the invention. It is to be understood that the forms of the invention shown and described herein are to be taken as examples of embodiments. Elements and materials may be substituted for those illustrated and described herein, parts and processes may be reversed, and certain features of the invention may be utilized independently, all as would be apparent to one skilled in the art after having the benefit of this description of the invention. Changes may be made in the elements described herein without departing from the spirit and scope of the invention as described in the following claims.

1-157. (canceled)

158. An intervertebral implant for a human spine, comprising:

an upper body comprising an inferior surface and a superior surface, wherein the superior surface of the upper body is configured to engage a first vertebra of the human spine;

a lower body comprising a superior surface and an inferior surface, wherein the inferior surface of the lower body is configured to engage a second vertebra of the human spine;

an insert comprising a superior surface and an inferior surface, wherein the insert is configured to be positioned between the superior surface of the lower body and the inferior surface of the upper body before insertion of the intervertebral implant between the first vertebra and the second vertebra of the human spine, and wherein the insert comprises an angled portion; and

an expansion member comprising a first angled portion and a second angled portion, wherein the expansion member is configured such that the first angled portion engages the angled portion of the insert to increase a separation distance between the upper body and the lower body after insertion of the intervertebral implant between the first vertebra and the second vertebra.

159. The intervertebral implant of claim 158, wherein engaging the insert comprises elevating the insert.

160. The intervertebral implant of claim 158, wherein the superior surface and the inferior surface of the insert are substantially flat.

161. The intervertebral implant of claim 158, wherein the inferior surface of the upper body comprises a concave portion, wherein the superior surface of the insert comprises a convex portion, and wherein the concave portion of the upper body is configured to be coupled to the convex portion of the insert to allow articulation of the upper body with respect to the lower body.

162. The intervertebral implant of claim 158, wherein the first angled portion and the second angled portion of the expansion member comprise wedge portions.

163. The intervertebral implant of claim 158, further comprising an advancing element, wherein the advancing element is configured to engage the second angled portion of the expansion member such that the expansion member advances toward the insert in a direction other than the direction of advancement of the advancing element.

164. The intervertebral implant of claim 158, further comprising an advancing element, wherein the advancing element is configured to be advanced in an anteroposterior direction or a posteroanterior direction to engage the second angled portion of the expansion member such that the expansion member advances in a mediolateral direction, allowing the first angled portion of the expansion member to engage the angled portion of the insert.

165. The intervertebral implant of claim 158, wherein the expansion member is configured to be advanced between the superior surface of the lower body and the inferior surface of the insert to increase a separation distance between the lower body and the insert, thereby elevating the insert.

166. The intervertebral implant of claim 158, wherein increasing the separation distance between the upper body and the lower body increases a height of the intervertebral implant.

167. The intervertebral implant of claim 158, wherein increasing the separation distance between the upper body and the lower body allows articulation or increased articulation of the upper body with respect to the lower body.

168. The intervertebral implant of claim 158, wherein the upper body contacts the lower body before expansion of the intervertebral implant.

169. An intervertebral implant for a human spine, comprising:

an upper body comprising an inferior surface and a superior surface, wherein the superior surface of the upper body is configured to engage a first vertebra of the human spine;

a lower body comprising a superior surface and an inferior surface, wherein the inferior surface of the lower body is configured to engage a second vertebra of the human spine;

an insert comprising a superior surface and an inferior surface, wherein the insert is configured to be positioned between the superior surface of the lower body

and the inferior surface of the upper body before insertion of the intervertebral implant between the first vertebra and the second vertebra of the human spine, and wherein the insert comprises an angled portion;

an expansion member comprising a substantially flat inferior surface, a substantially flat superior surface, a first angled portion, and a second angled portion; and

an advancing element comprising an angled portion, wherein the angled portion of the advancing element is configured to engage the second angled portion of the expansion member, advancing the expansion member such that the first angled portion of the expansion member engages the angled portion of the insert, thereby increasing a separation distance between the upper body and the lower body of the intervertebral implant.

170. The intervertebral implant of claim 169, wherein the superior surface and the inferior surface of the insert are substantially flat.

171. The intervertebral implant of claim 169, wherein the inferior surface of the upper body comprises a concave portion, wherein the superior surface of the insert comprises a convex portion, and wherein the concave portion of the upper body is configured to be coupled to the convex portion of the insert to allow articulation of the upper body with respect to the lower body.

172. The intervertebral implant of claim 169, wherein the first angled portion and the second angled portion of the expansion member comprise wedge portions.

173. The intervertebral implant of claim 169, wherein the advancing element is configured to be advanced in a direction other than the direction of the advancement of the expansion member.

174. The intervertebral implant of claim 169, wherein the advancing element is configured to be advanced in an anteroposterior direction or a posteroanterior direction to engage the second angled portion of the expansion member such that the expansion member advances in a mediolateral direction to engage the angled portion of the insert with the first angled portion of the expansion member.

175. The intervertebral implant of claim 169, wherein expanding the intervertebral implant further comprises advancing the expansion member between the superior surface of the lower body and the inferior surface of the insert to elevate the insert.

176. The intervertebral implant of claim 169, wherein increasing the separation distance between the upper body and the lower body increases a height of the intervertebral implant.

177. The intervertebral implant of claim 169, wherein increasing the separation distance between the upper body and the lower body allows articulation or increased articulation of the upper body with respect to the lower body.

178. The intervertebral implant of claim 169, wherein the upper body contacts the lower body before the separation distance between the upper body and the lower body is increased.

179. The intervertebral implant of claim 169, wherein the advancing element is a portion of a tool.

* * * * *