US007118579B2

(12) **United States Patent**
Michelson

(10) **Patent No.: US 7,118,579 B2**
(45) **Date of Patent: Oct. 10, 2006**

(54) **INSTRUMENTATION FOR INSERTING AN EXPANDABLE INTERBODY SPINAL FUSION IMPLANT**

(75) Inventor: **Gary K. Michelson**, Venice, CA (US)

(73) Assignee: **SDGI Holdings, Inc.**, Wilmington, DE (US)

(*) Notice: Subject to any disclaimer, the term of this patent is extended or adjusted under 35 U.S.C. 154(b) by 331 days.

(21) Appl. No.: **10/061,236**

(22) Filed: **Feb. 4, 2002**

(65) **Prior Publication Data**

US 2002/0177897 A1 Nov. 28, 2002

Related U.S. Application Data

(60) Provisional application No. 60/266,426, filed on Feb. 4, 2001, provisional application No. 60/277,890, filed on Mar. 21, 2001.

(51) **Int. Cl.**
A61B 17/56 (2006.01)

(52) **U.S. Cl.** **606/99**; 606/90

(58) **Field of Classification Search** .. 623/17.11–17.16; 606/61, 66, 92, 99
See application file for complete search history.

(56) **References Cited**

U.S. PATENT DOCUMENTS

3,875,595	A	4/1975	Froning
4,309,777	A	1/1982	Patil
4,349,921	A	9/1982	Kuntz
4,401,112	A	8/1983	Rezaian
4,501,269	A	2/1985	Bagby
4,553,273	A	11/1985	Wu
4,554,914	A	11/1985	Kapp et al.
4,636,217	A	1/1987	Ogilvie et al.
4,657,550	A	4/1987	Daher
4,714,469	A	12/1987	Kenna
4,759,769	A	7/1988	Hedman et al.
4,863,476	A	9/1989	Shepperd
4,932,975	A	6/1990	Main et al.
4,961,740	A	10/1990	Ray et al.
5,015,247	A	5/1991	Michelson
5,026,373	A	6/1991	Ray et al.
5,055,104	A	10/1991	Ray
5,059,193	A	10/1991	Kuslich
5,062,850	A	11/1991	MacMillan et al.
5,123,926	A	6/1992	Pisharodi
5,147,402	A	9/1992	Bohler et al.
5,171,278	A	12/1992	Pisharodi
5,192,327	A	3/1993	Brantigan
5,236,460	A	8/1993	Barber
5,258,031	A	11/1993	Salib et al.
5,263,953	A	11/1993	Bagby
5,290,312	A	3/1994	Kojimoto et al.
5,306,310	A	4/1994	Siebels
5,314,477	A	5/1994	Marnay
5,336,223	A	8/1994	Rogers
5,390,683	A	2/1995	Pisharodi
5,397,364	A	3/1995	Kozak et al.
5,439,684	A	8/1995	Prewett et al.
5,455,231	A	10/1995	Constantz et al.
5,464,439	A	11/1995	Gendler

(Continued)

FOREIGN PATENT DOCUMENTS

CA	2151481	3/1995

(Continued)

Primary Examiner—David J. Isabella
(74) *Attorney, Agent, or Firm*—Martin & Ferraro, LLP

(57) **ABSTRACT**

Instruments and methods for inserting and expanding interbody spinal fusion implants having an expandable height.

181 Claims, 34 Drawing Sheets

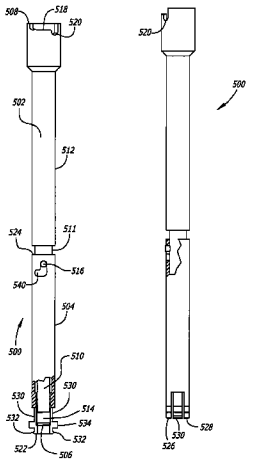

MEDTRONIC EXHIBIT 1014

U.S. PATENT DOCUMENTS

5,507,813	A		4/1996	Dowd et al.
5,507,816	A		4/1996	Bullivant
5,522,899	A		6/1996	Michelson
5,549,679	A		8/1996	Kuslich
5,554,191	A		9/1996	Lahille et al.
5,609,635	A		3/1997	Michelson
5,649,931	A		7/1997	Bryant et al.
5,653,763	A		8/1997	Errico et al.
5,665,122	A		9/1997	Kambin
5,669,909	A		9/1997	Zdeblick et al.
5,693,100	A		12/1997	Pisharodi
5,702,391	A		12/1997	Lin
5,702,455	A		12/1997	Saggar
5,713,904	A		2/1998	Errico et al.
5,716,415	A	*	2/1998	Steffee 623/17.16
5,749,916	A		5/1998	Richelsoph
5,776,199	A		7/1998	Michelson
5,782,830	A		7/1998	Farris
5,782,832	A		7/1998	Larsen et al.
5,785,710	A		7/1998	Michelson
5,800,550	A		9/1998	Sertich
5,865,848	A		2/1999	Baker
5,885,299	A	*	3/1999	Winslow et al. 606/99
5,885,982	A		3/1999	Dolynchuk et al.
5,910,141	A		6/1999	Morrison et al.
5,928,242	A		7/1999	Kuslich et al.
5,928,284	A		7/1999	Mehdizadeh
5,968,098	A		10/1999	Winslow
5,976,187	A		11/1999	Richelsoph
5,980,522	A		11/1999	Koros et al.
5,989,290	A		11/1999	Biedermann et al.
6,015,436	A		1/2000	Schonhoffer
6,019,792	A		2/2000	Cauthen
6,039,761	A		3/2000	Li et al.
6,045,579	A		4/2000	Hochshuler et al.
6,059,829	A		5/2000	Schlapfer et al.
6,066,174	A		5/2000	Farris
6,080,155	A		6/2000	Michelson
6,080,193	A		6/2000	Hochshuler et al.
6,083,225	A		7/2000	Winslow et al.
6,087,555	A		7/2000	Dunstan et al.
6,093,207	A		7/2000	Pisharodi
6,102,950	A		8/2000	Vaccaro
6,117,174	A		9/2000	Nolan
6,126,689	A		10/2000	Brett
6,129,763	A		10/2000	Chauvin et al.
6,174,311	B1		1/2001	Branch et al.
6,176,882	B1		1/2001	Biedermann et al.
6,183,517	B1		2/2001	Suddaby
6,190,414	B1		2/2001	Young et al.
6,190,880	B1		2/2001	Israel et al.
6,193,757	B1		2/2001	Foley et al.
6,201,039	B1		3/2001	Brown et al.
6,319,257	B1		11/2001	Carignan et al.
6,375,683	B1		4/2002	Crozet et al.
6,419,705	B1		7/2002	Erickson
6,436,140	B1		8/2002	Liu et al.
6,443,989	B1		9/2002	Jackson
6,491,724	B1		12/2002	Ferree
6,821,298	B1		11/2004	Jackson

FOREIGN PATENT DOCUMENTS

DE	89 22 203	7/1989
DE	44 16 605 C1	6/1995
FR	2 717 068	9/1995
FR	2 771 282	5/1999
SU	1424826 A1	9/1988
WO	WO 97/00054	12/1997
WO	WO 98/34552	8/1998
WO	WO 98/34688	8/1998
WO	WO 88/27348	9/1998
WO	WO 98/48739	11/1998
WO	WO 99/42062	8/1999
WO	WO 00/12033	3/2000
WO	WO 00/35389	6/2000
WO	WO 00/35888	6/2000
WO	WO 00/86045	11/2000
WO	WO 00/74605	12/2000
WO	WO 00/78253	12/2000

* cited by examiner

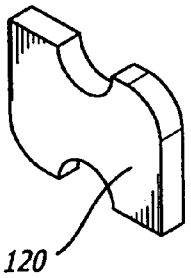

FIG. 1A

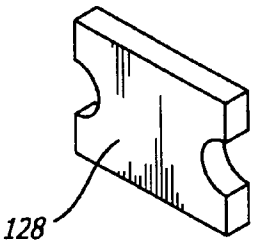

FIG. 1B

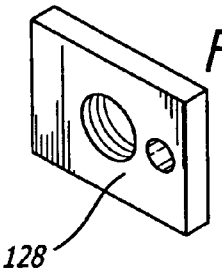

FIG. 1C

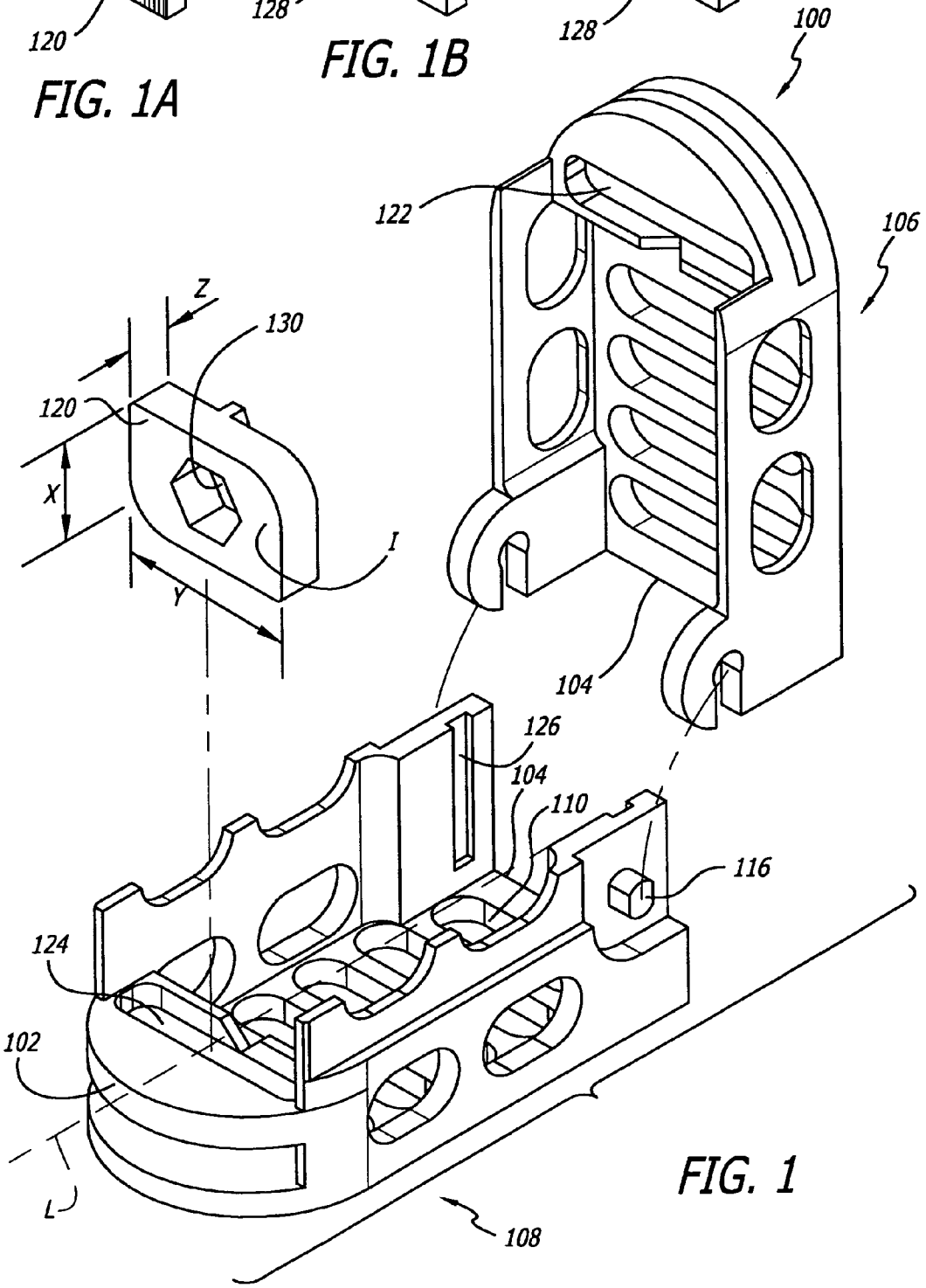

FIG. 1

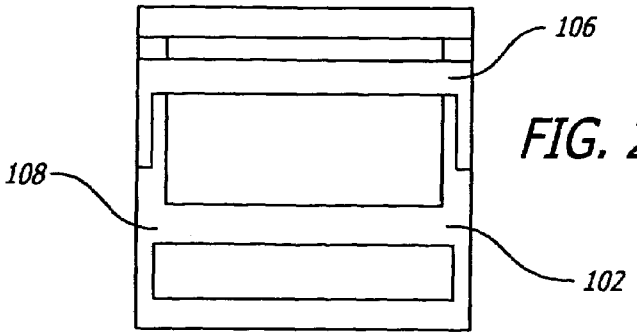

FIG. 2

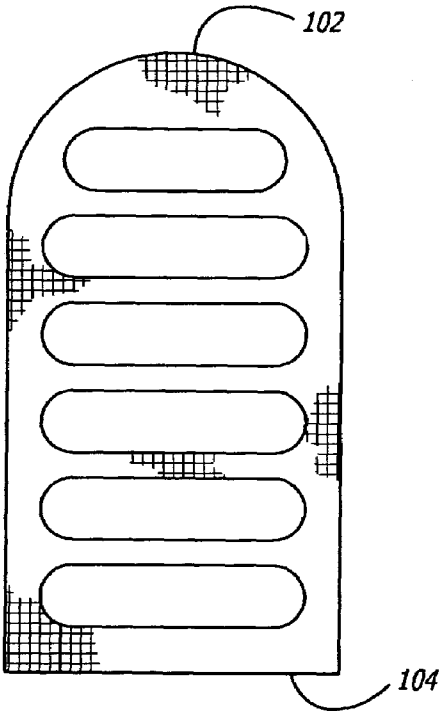

FIG. 3

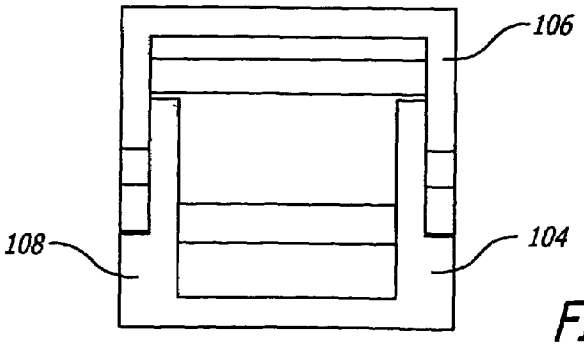

FIG. 4

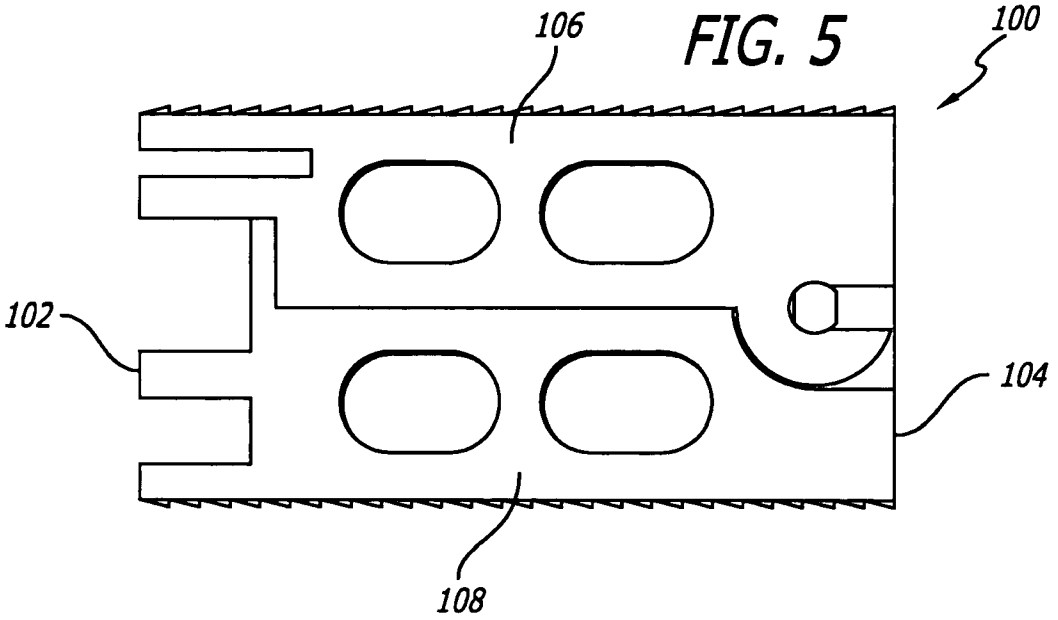

FIG. 5

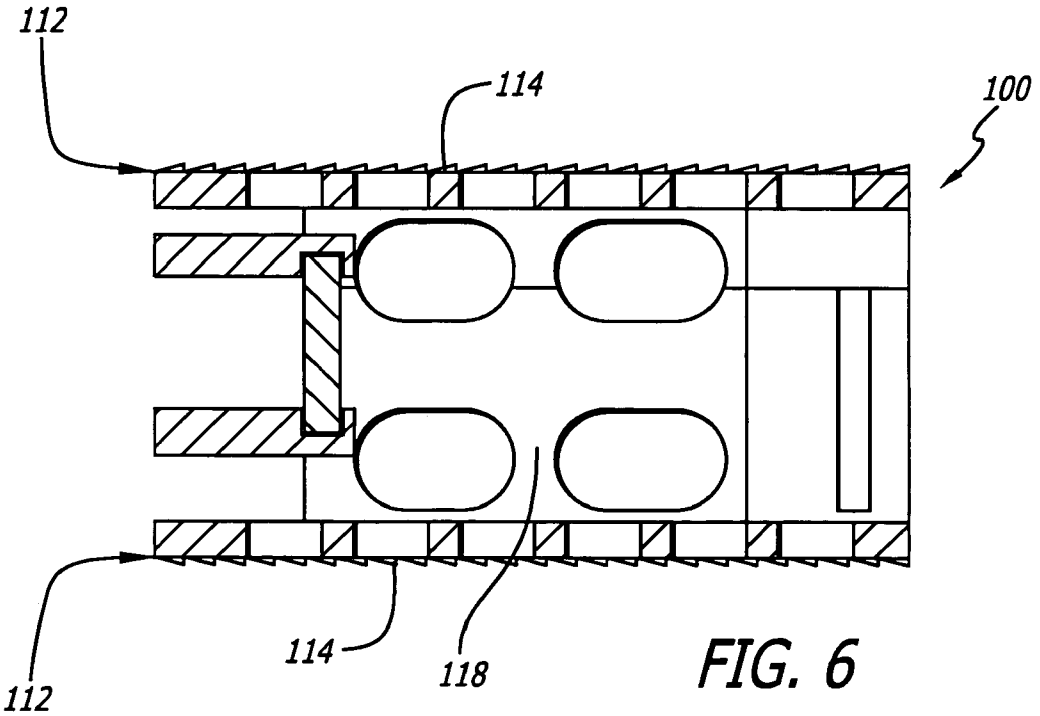

FIG. 6

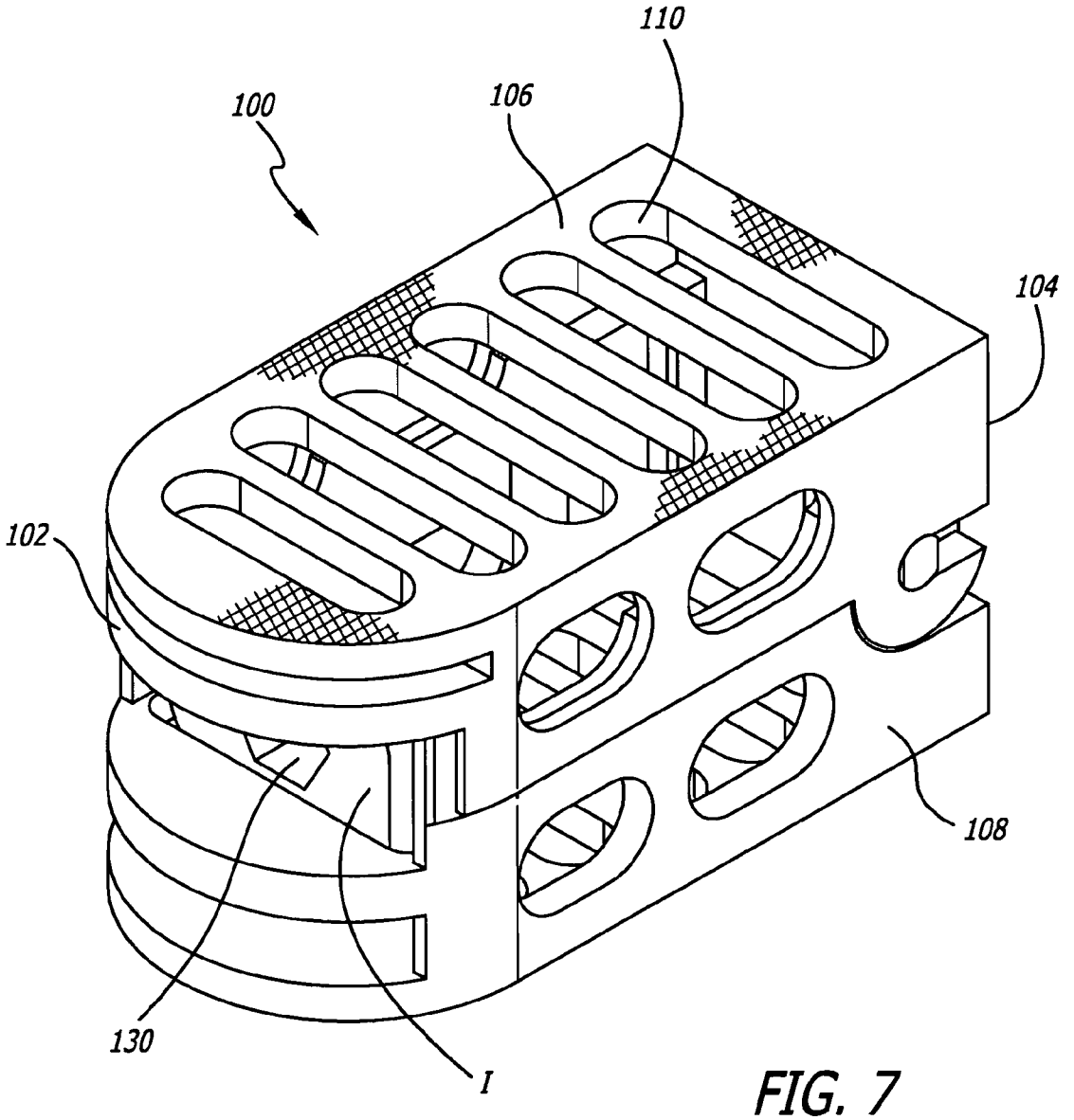

FIG. 7

FIG. 8

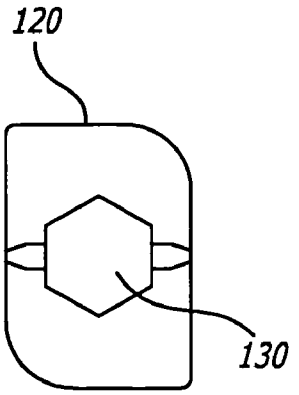

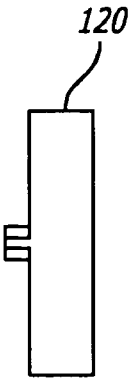

FIG. 9

FIG. 10

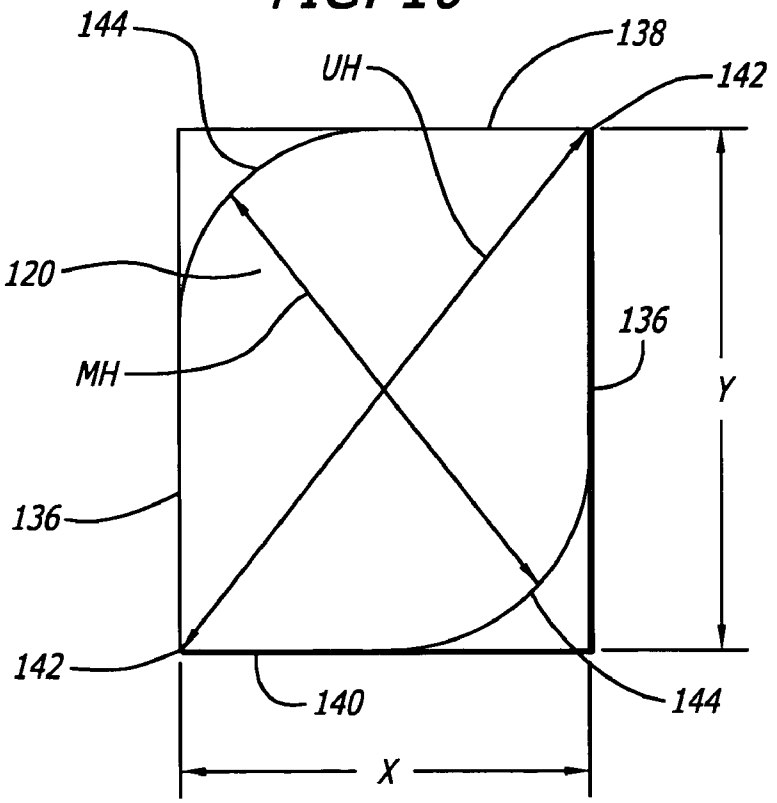

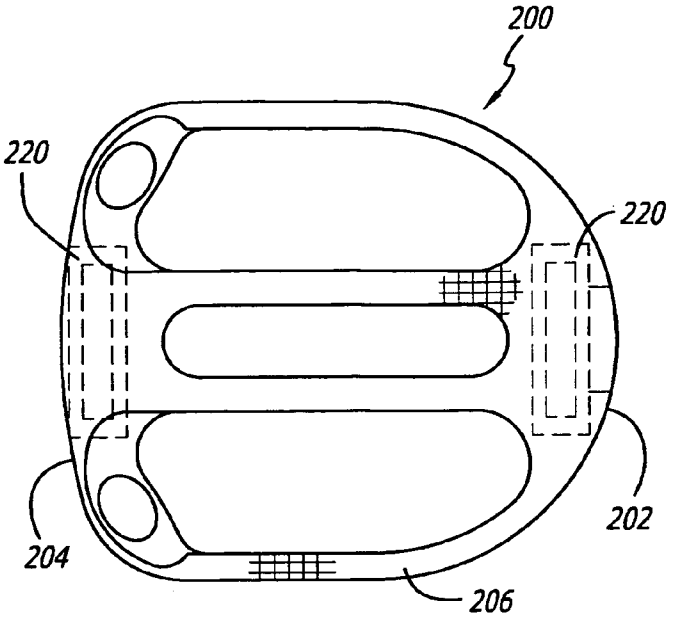

FIG. 11

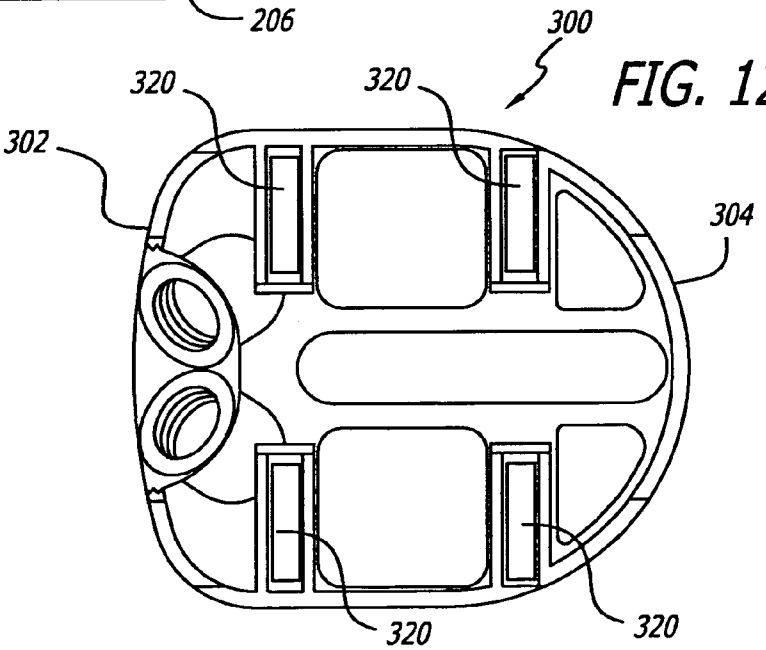

FIG. 12

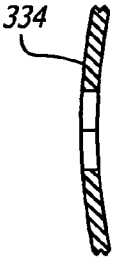

FIG. 13

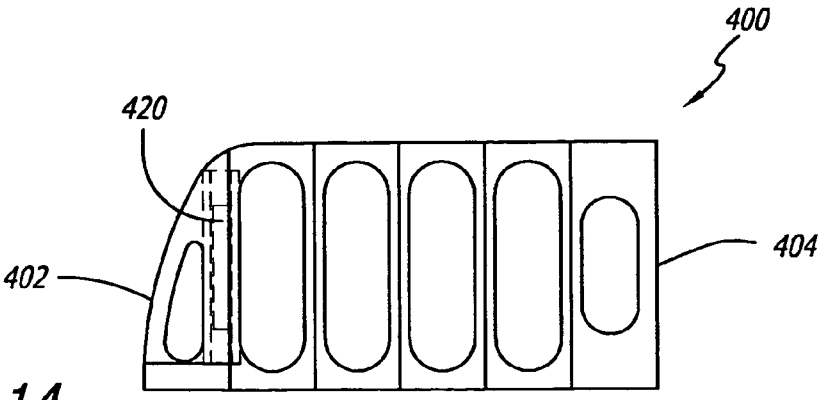

FIG. 14

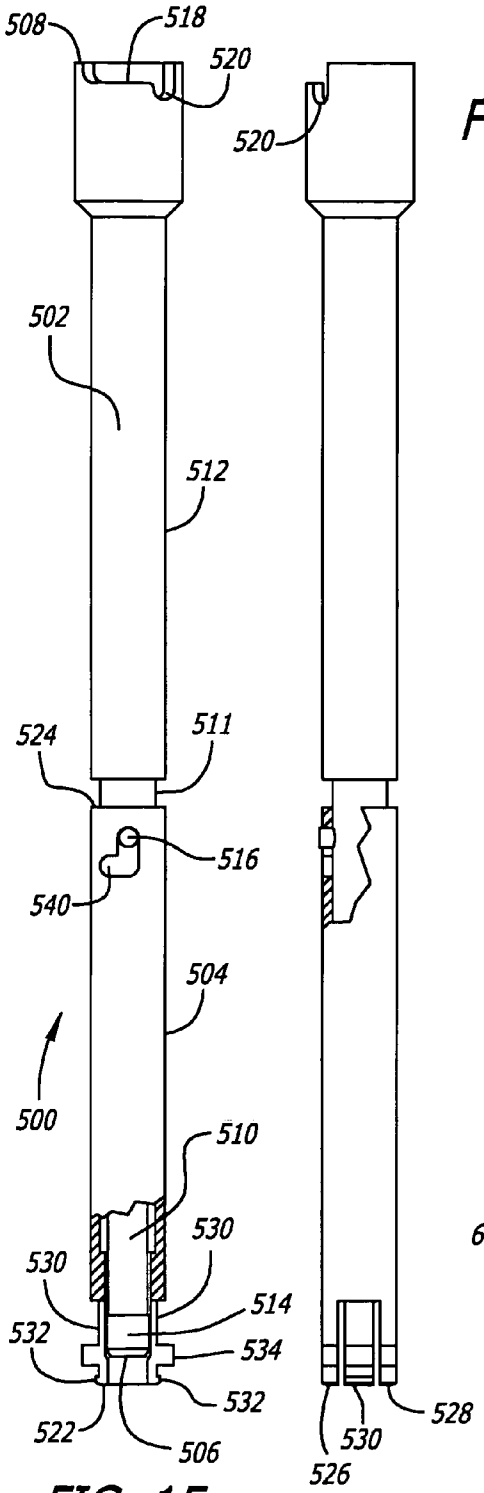

FIG. 15

FIG. 16

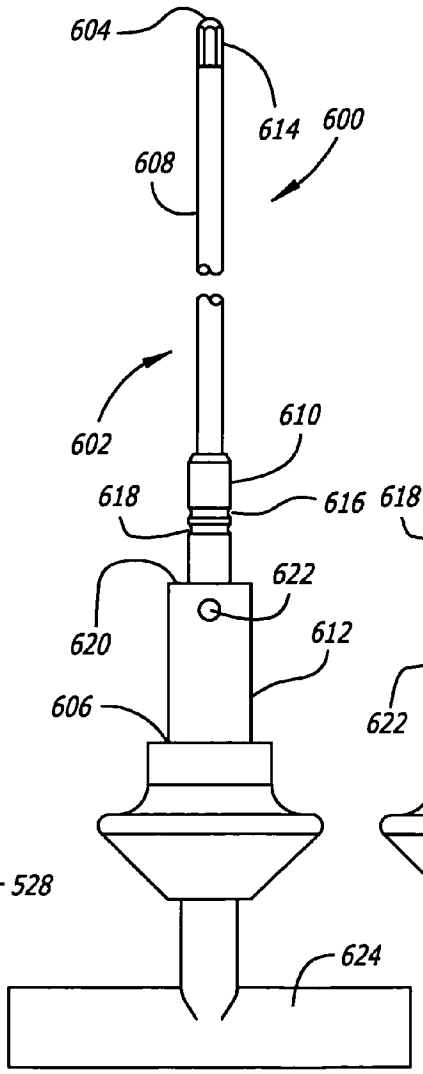

FIG. 17

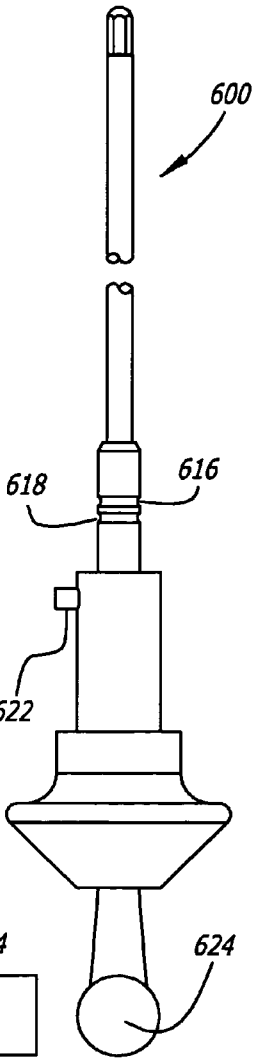

FIG. 18

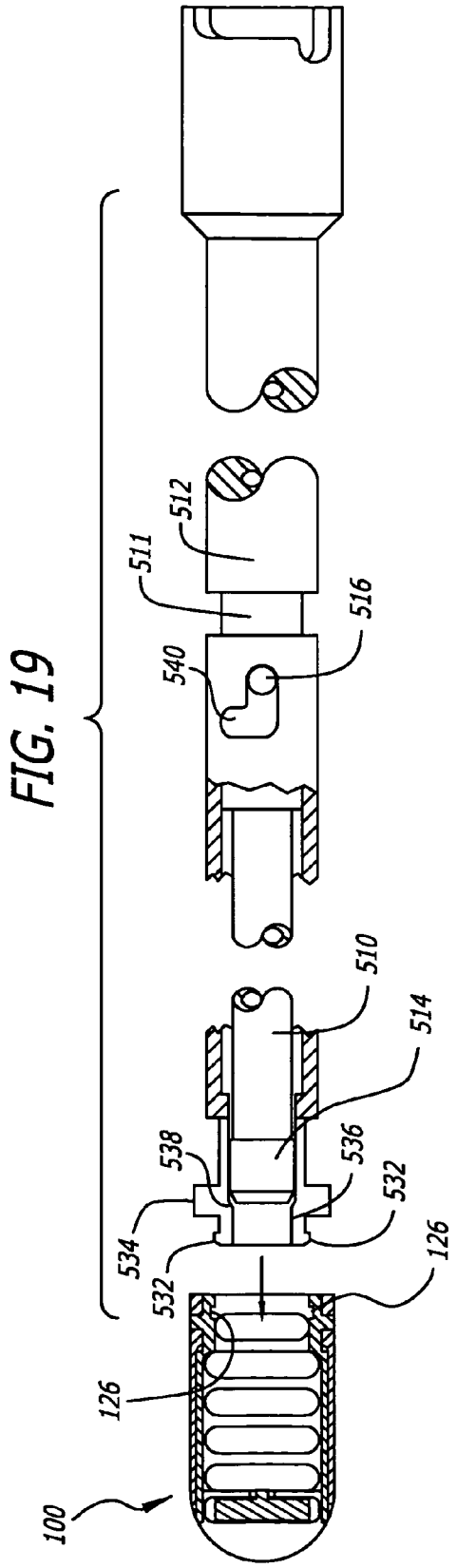
512
511
516
540
510
514
538
536
532
534
532
126
126
100

FIG. 19

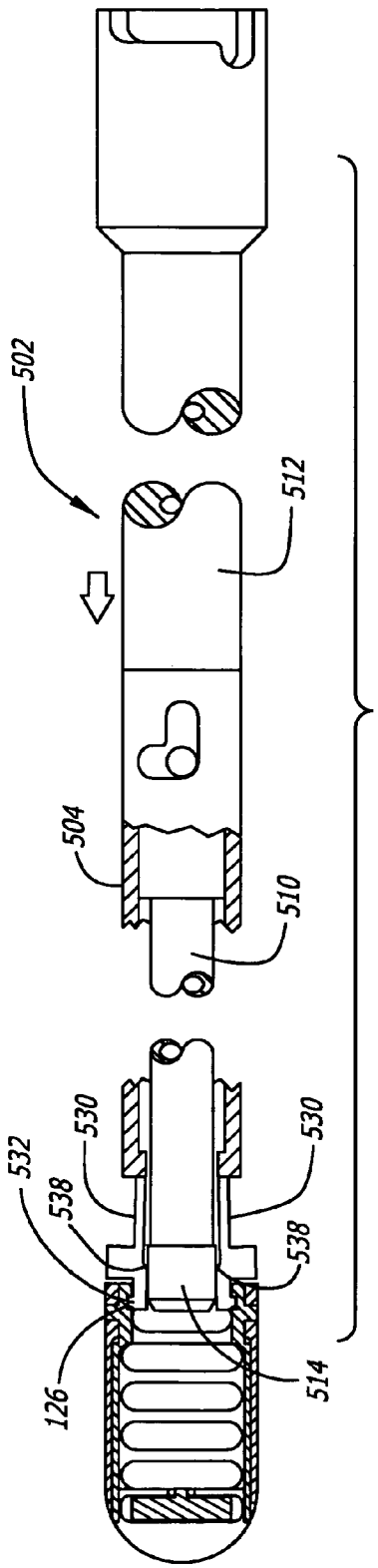
502
512
504
510
530
530
532
538
538
126
514

FIG. 20

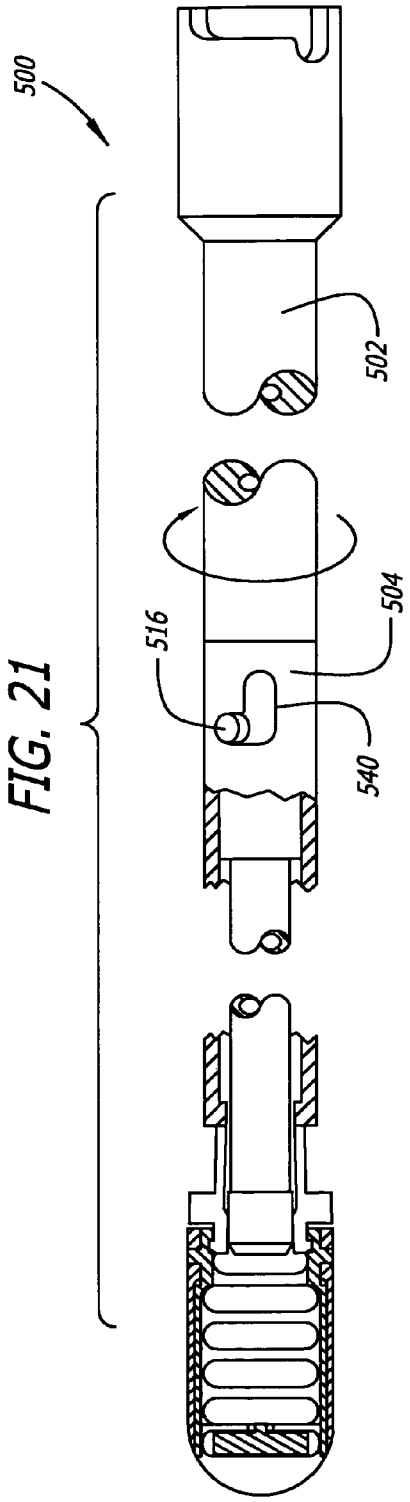

FIG. 21

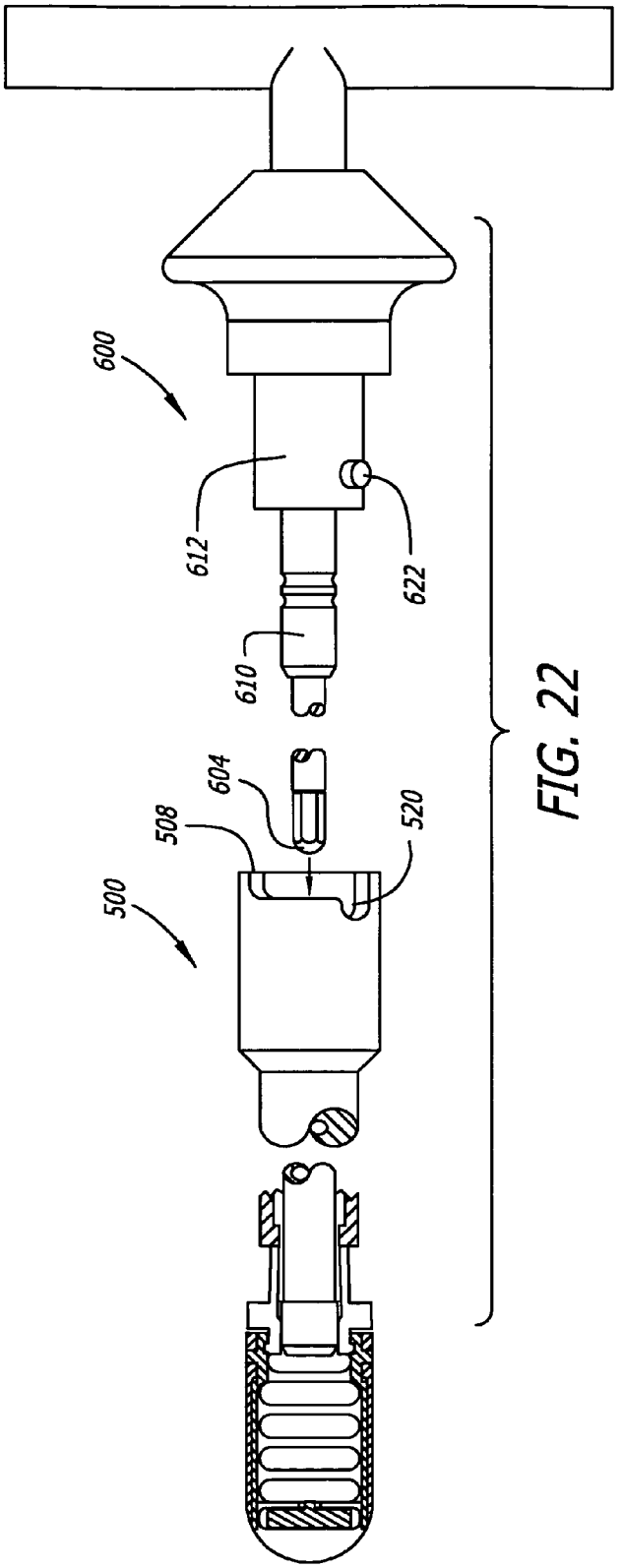

FIG. 22

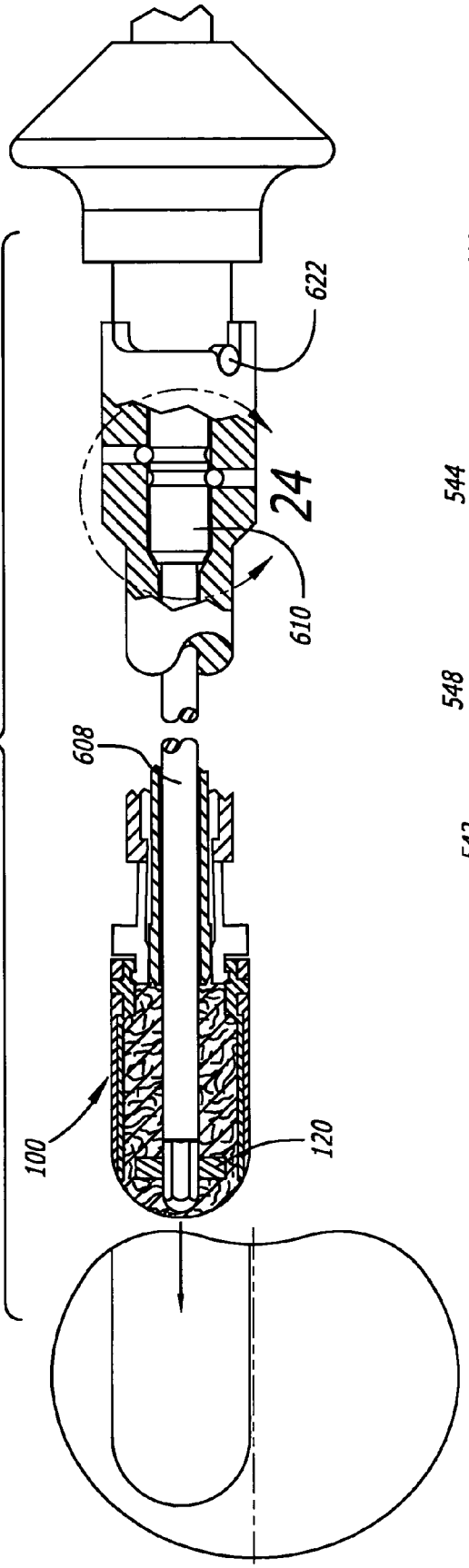

FIG. 23

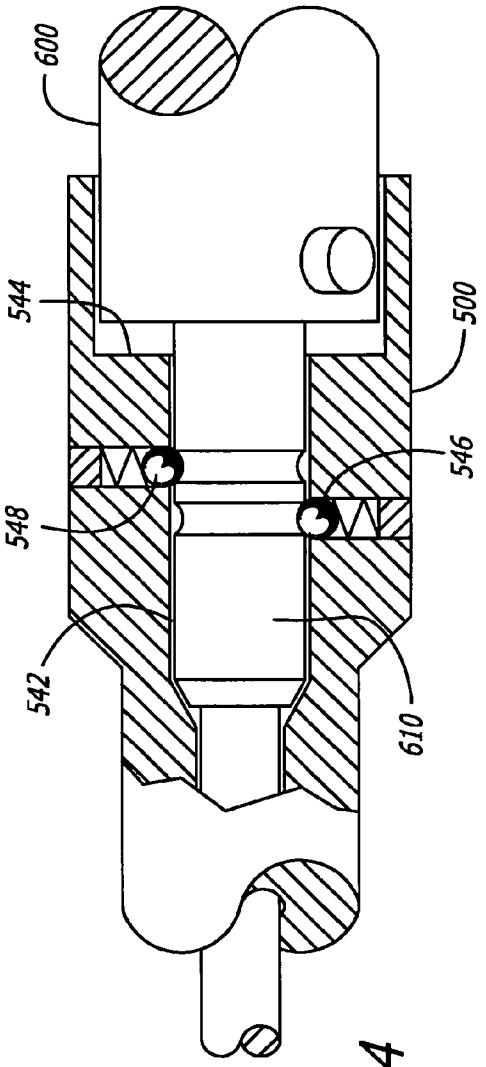

FIG. 24

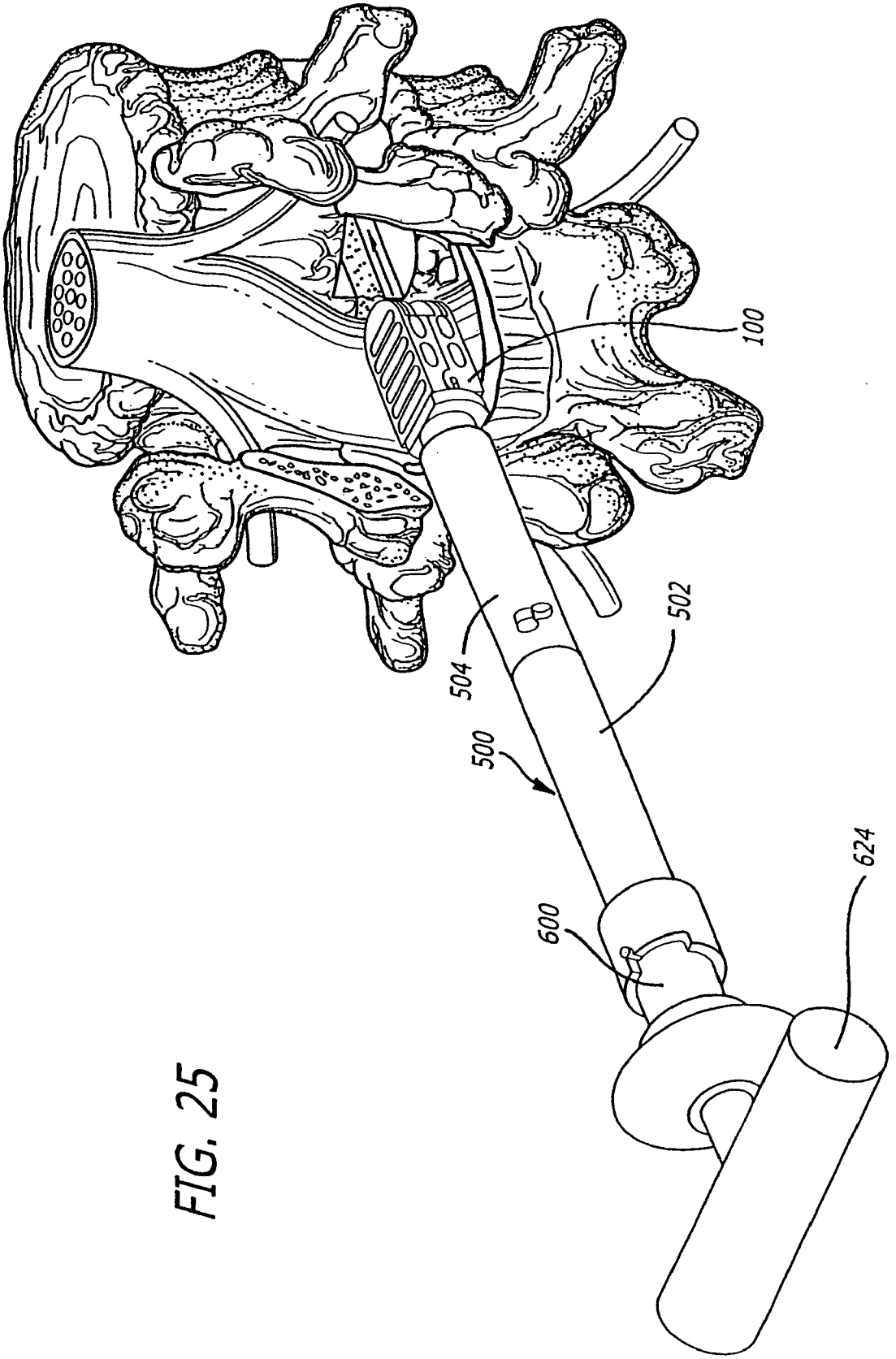

FIG. 25

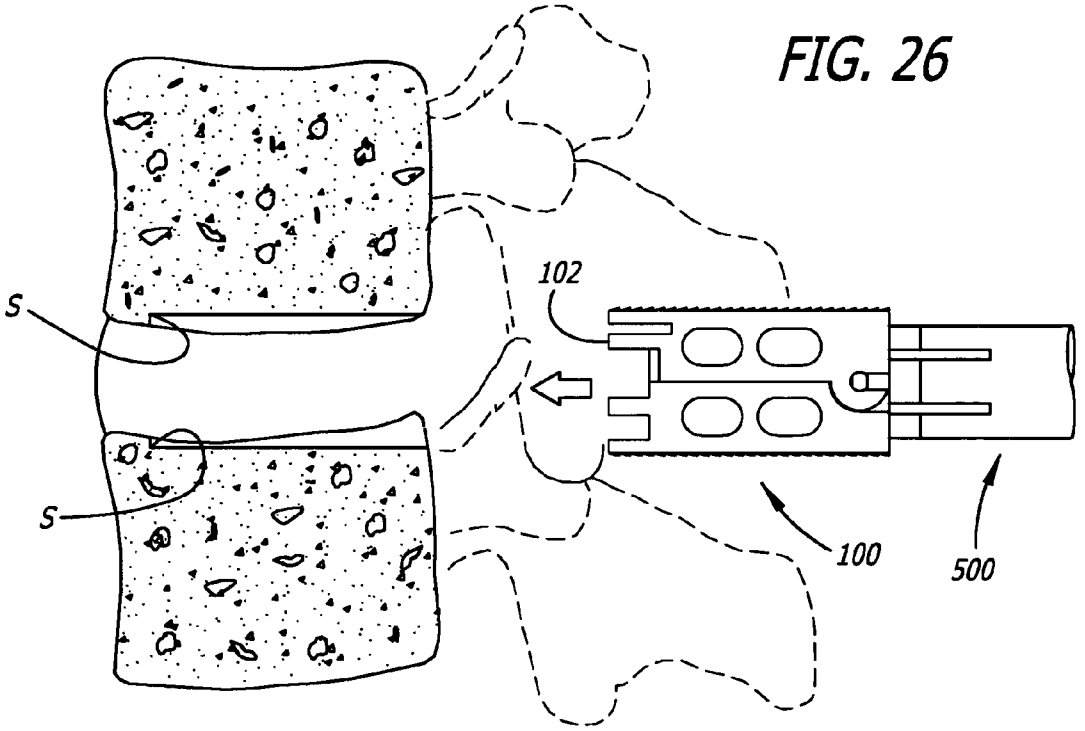

FIG. 26

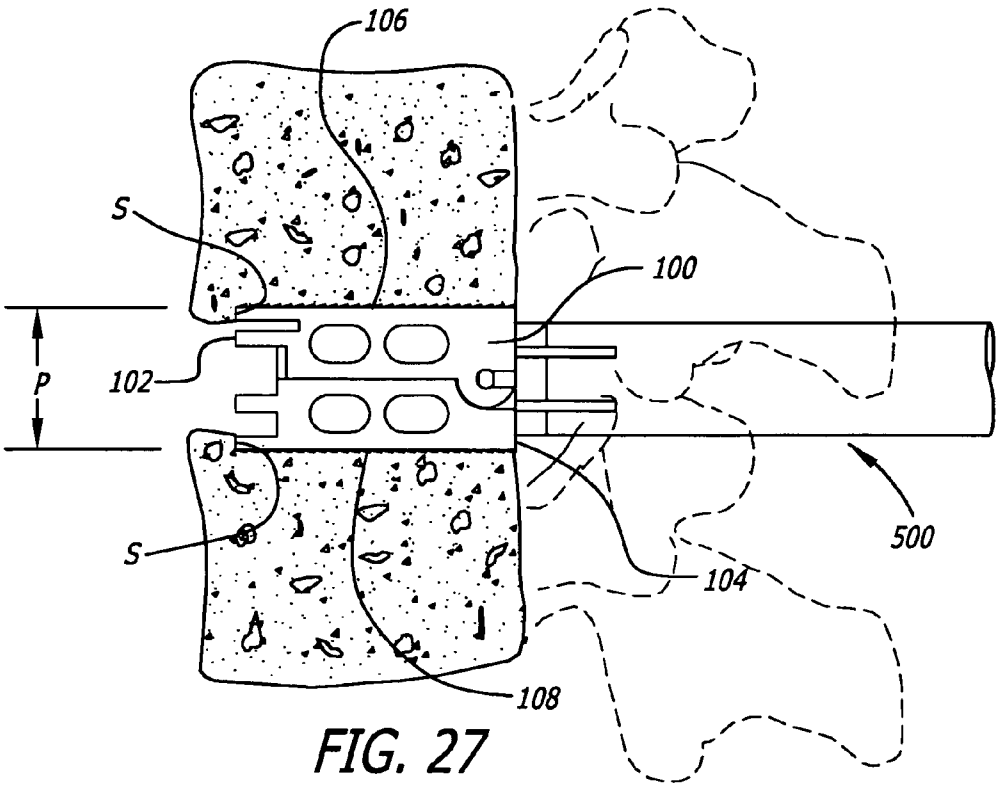

FIG. 27

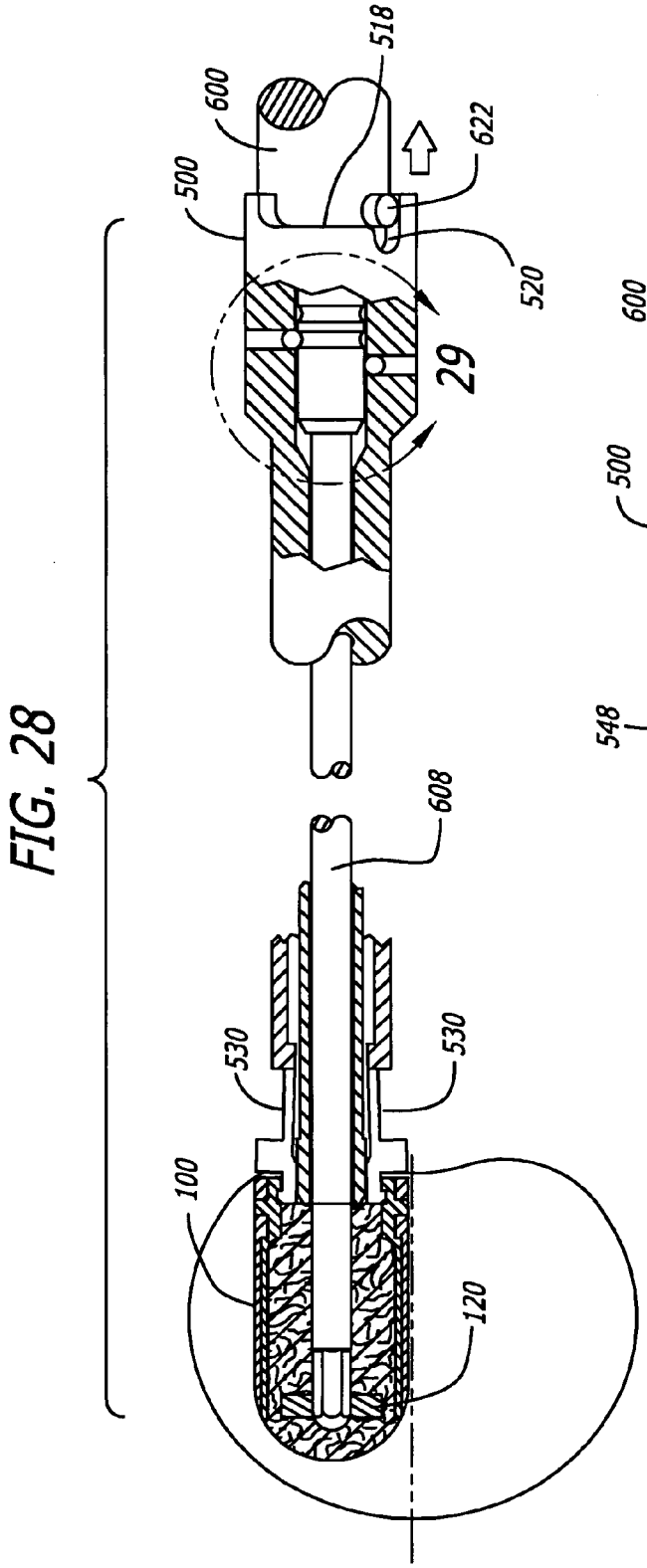
600
518
500
622
520
29
608
530
530
100
120

FIG. 28

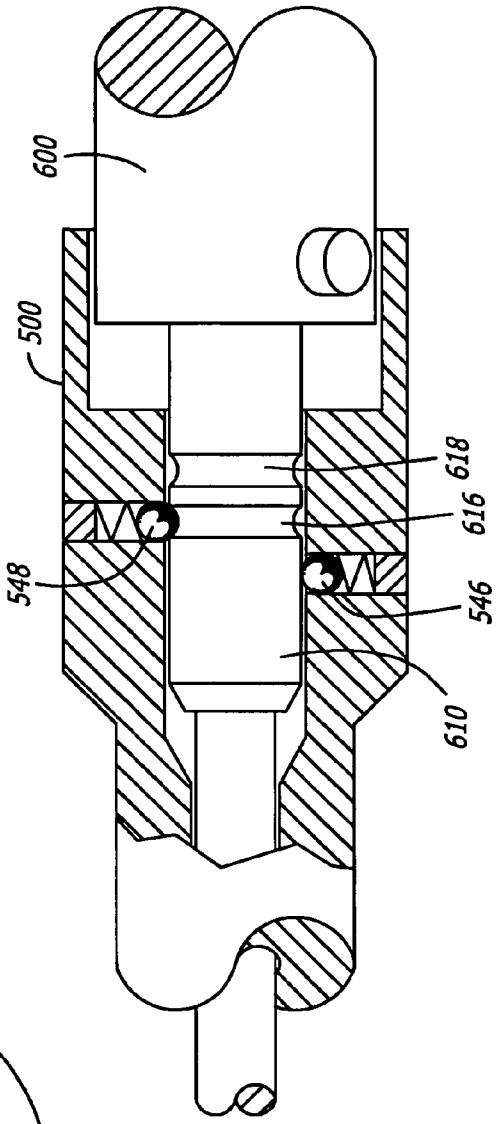
600
500
618
616
548
546
610

FIG. 29

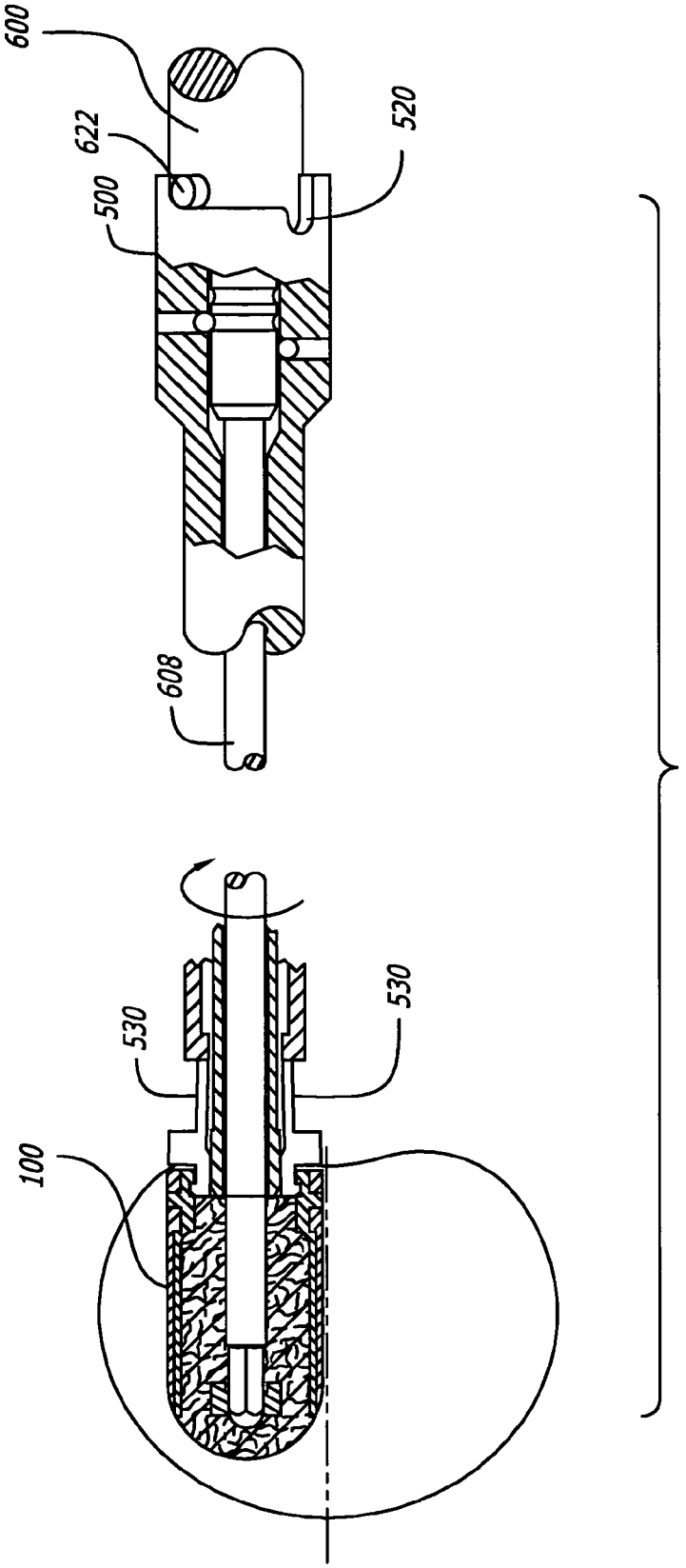

FIG. 30

FIG. 31

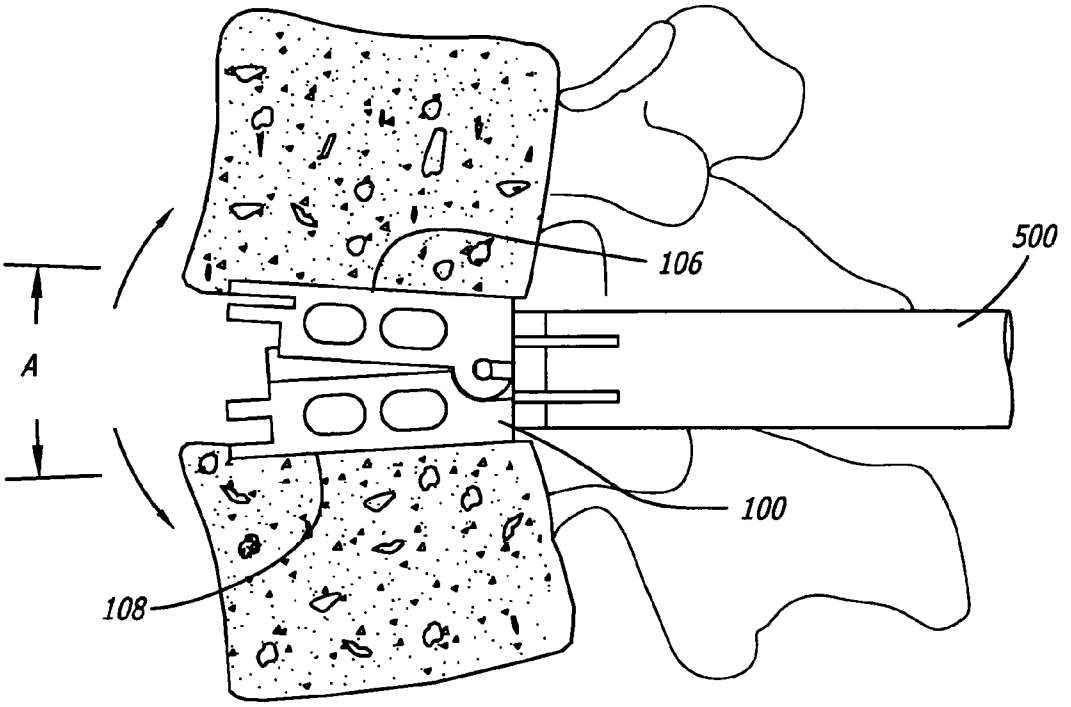

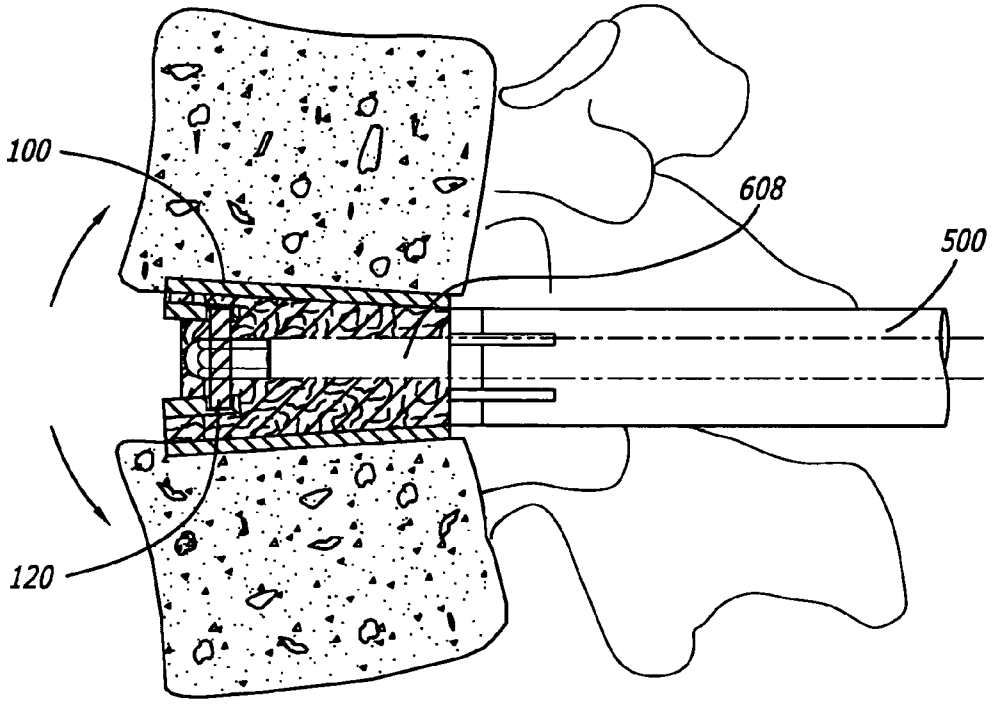

FIG. 32

FIG. 33

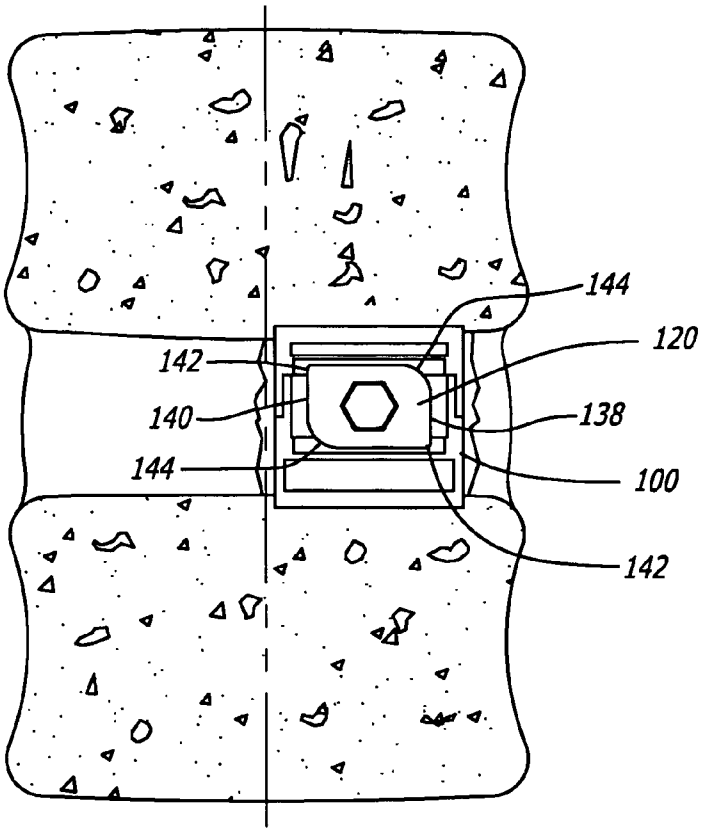

FIG. 34

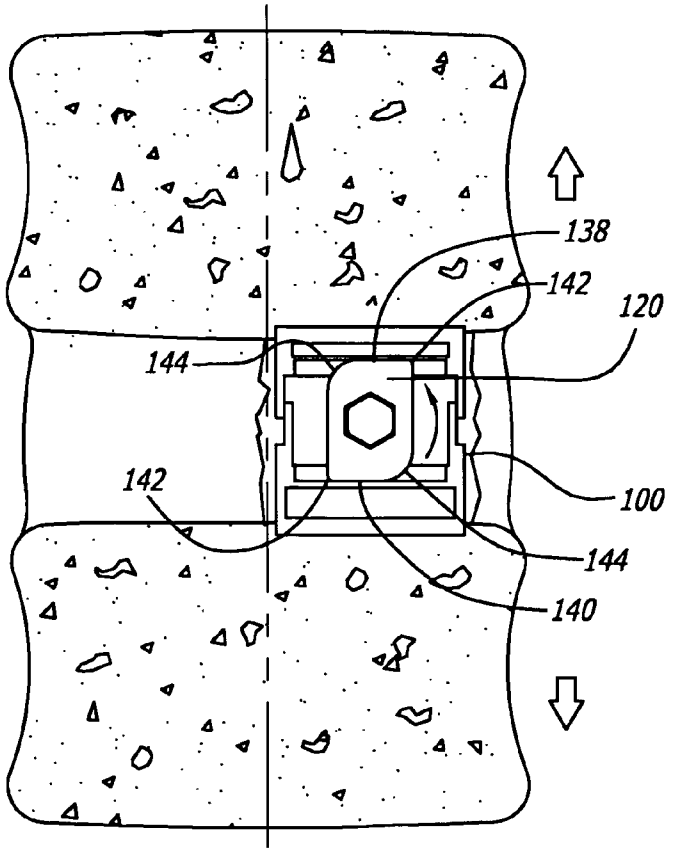

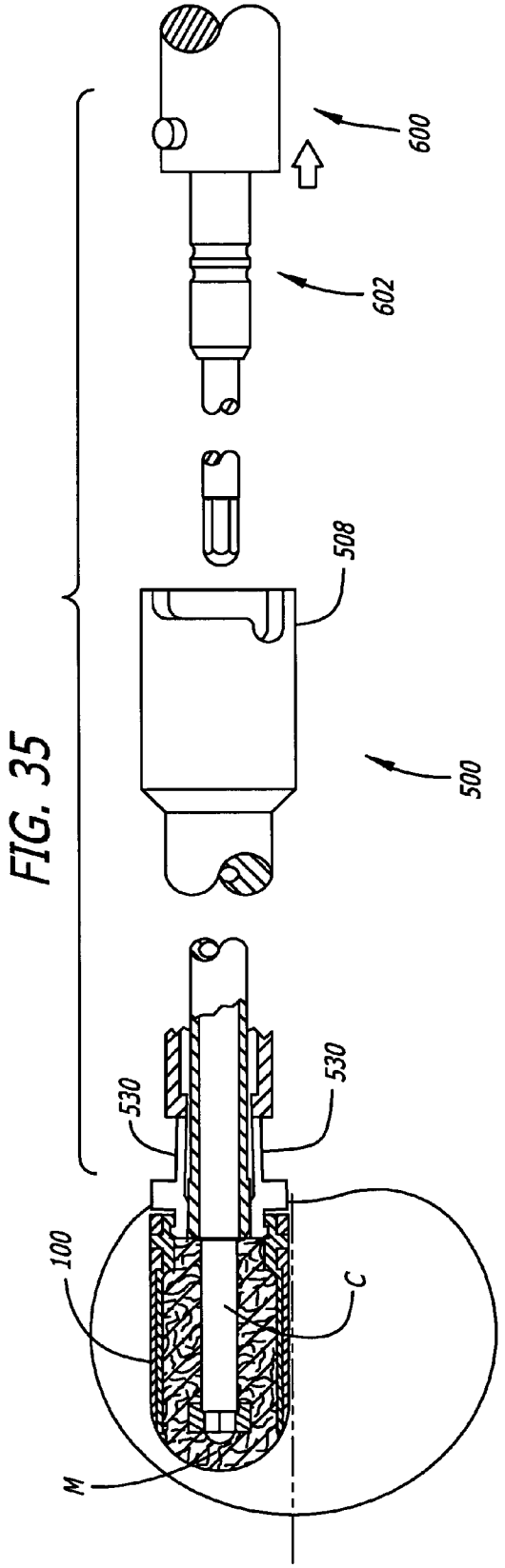

FIG. 35

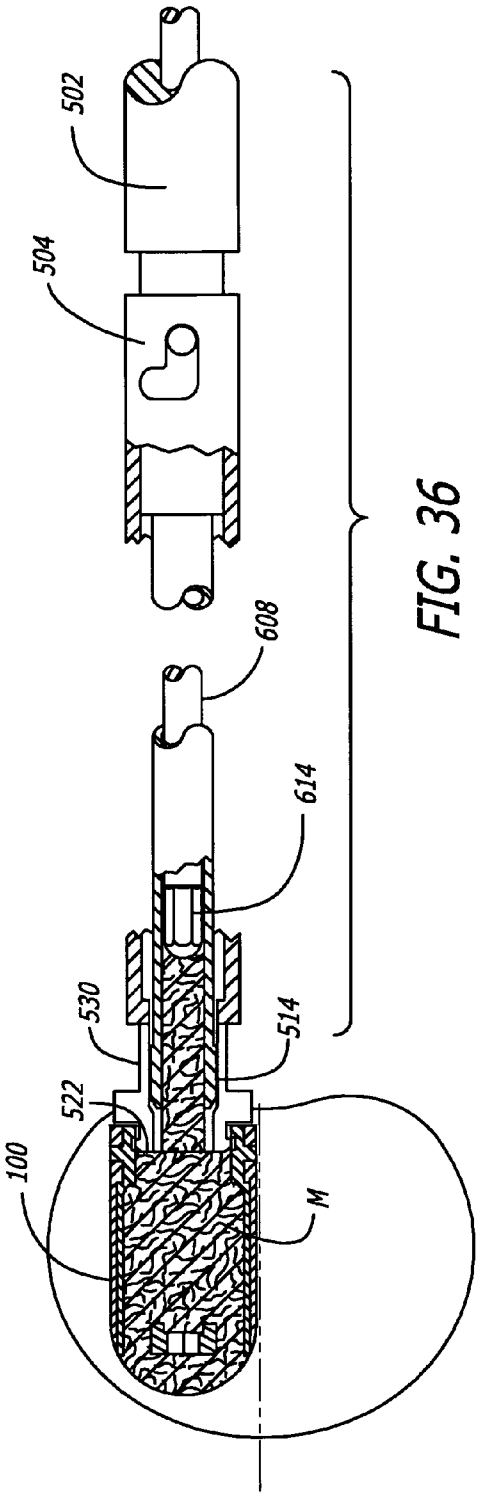

FIG. 36

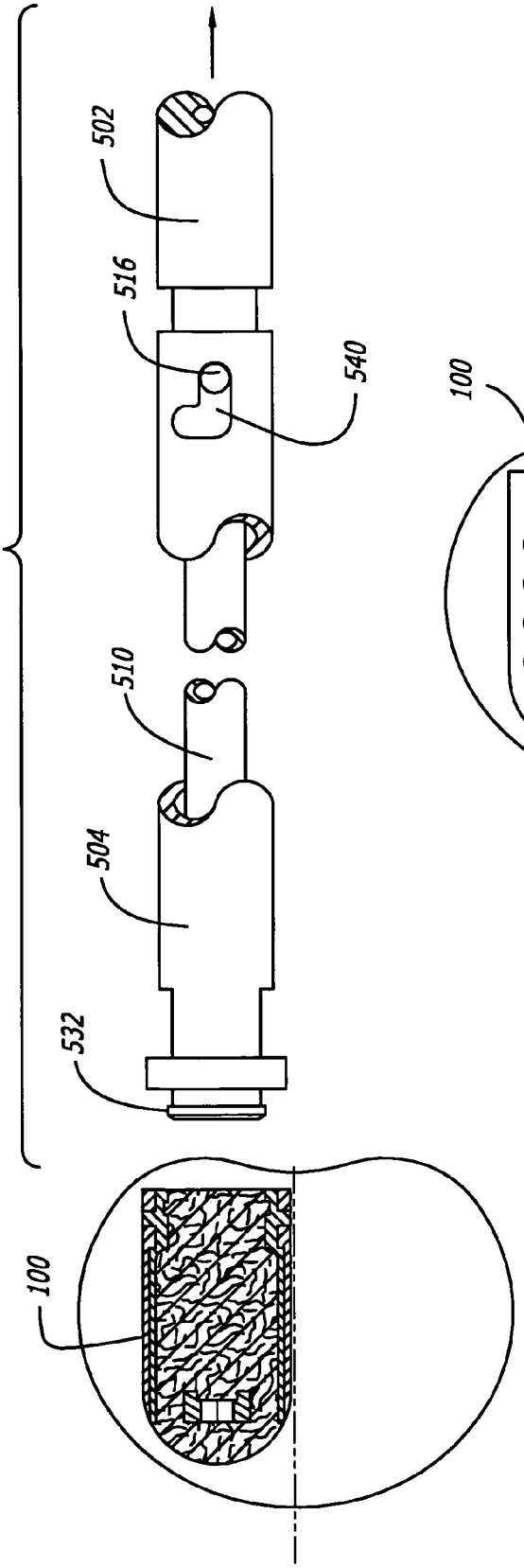

FIG. 37

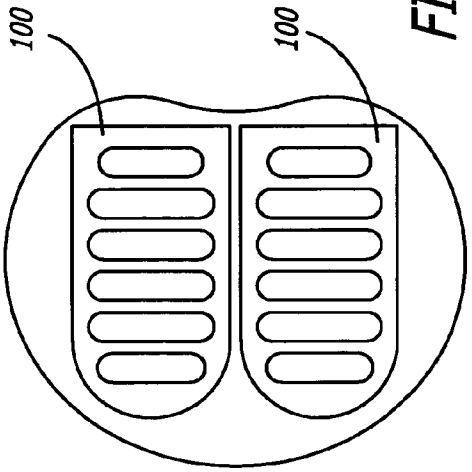

FIG. 38

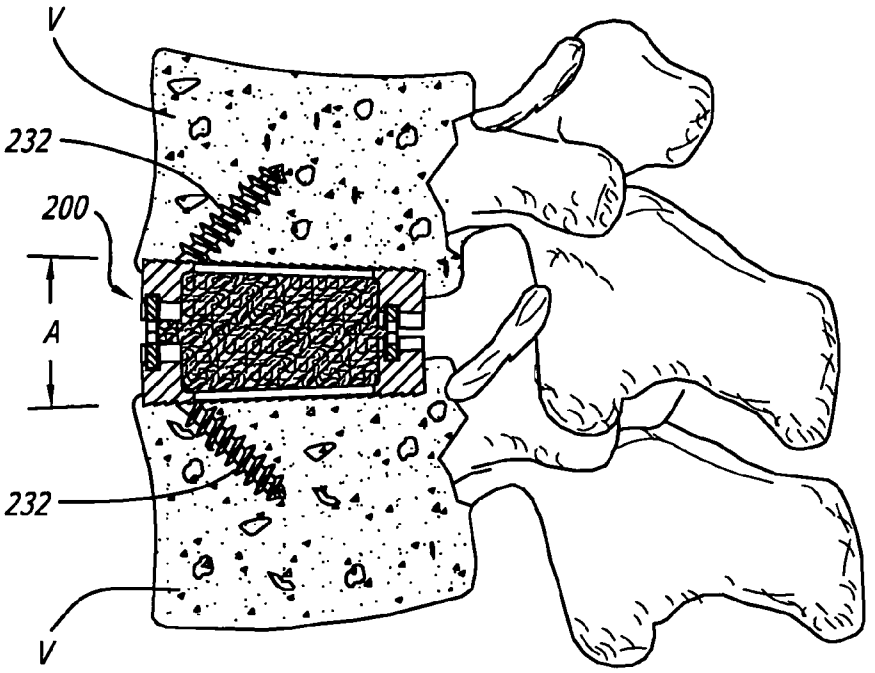

FIG. 39

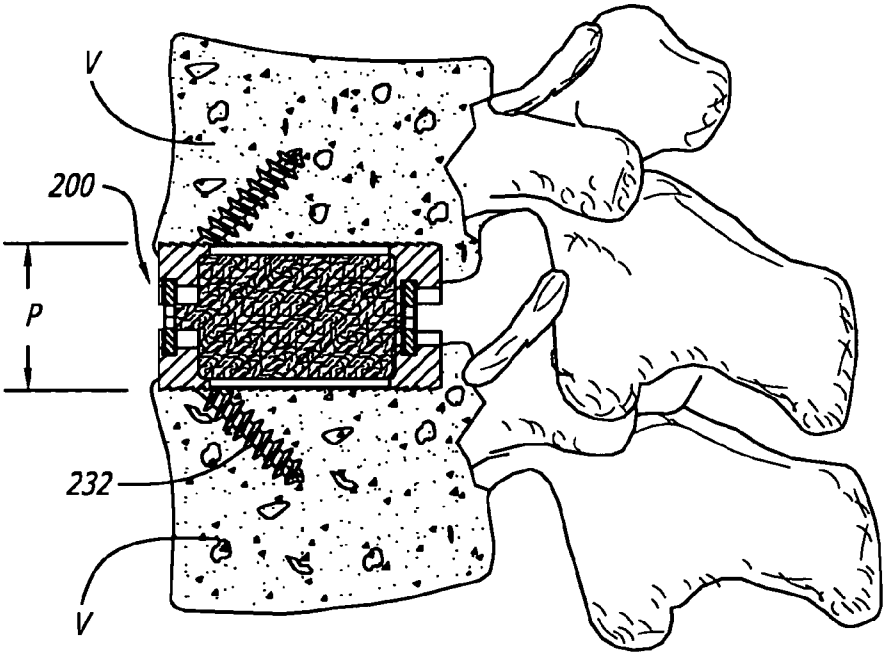

FIG. 40

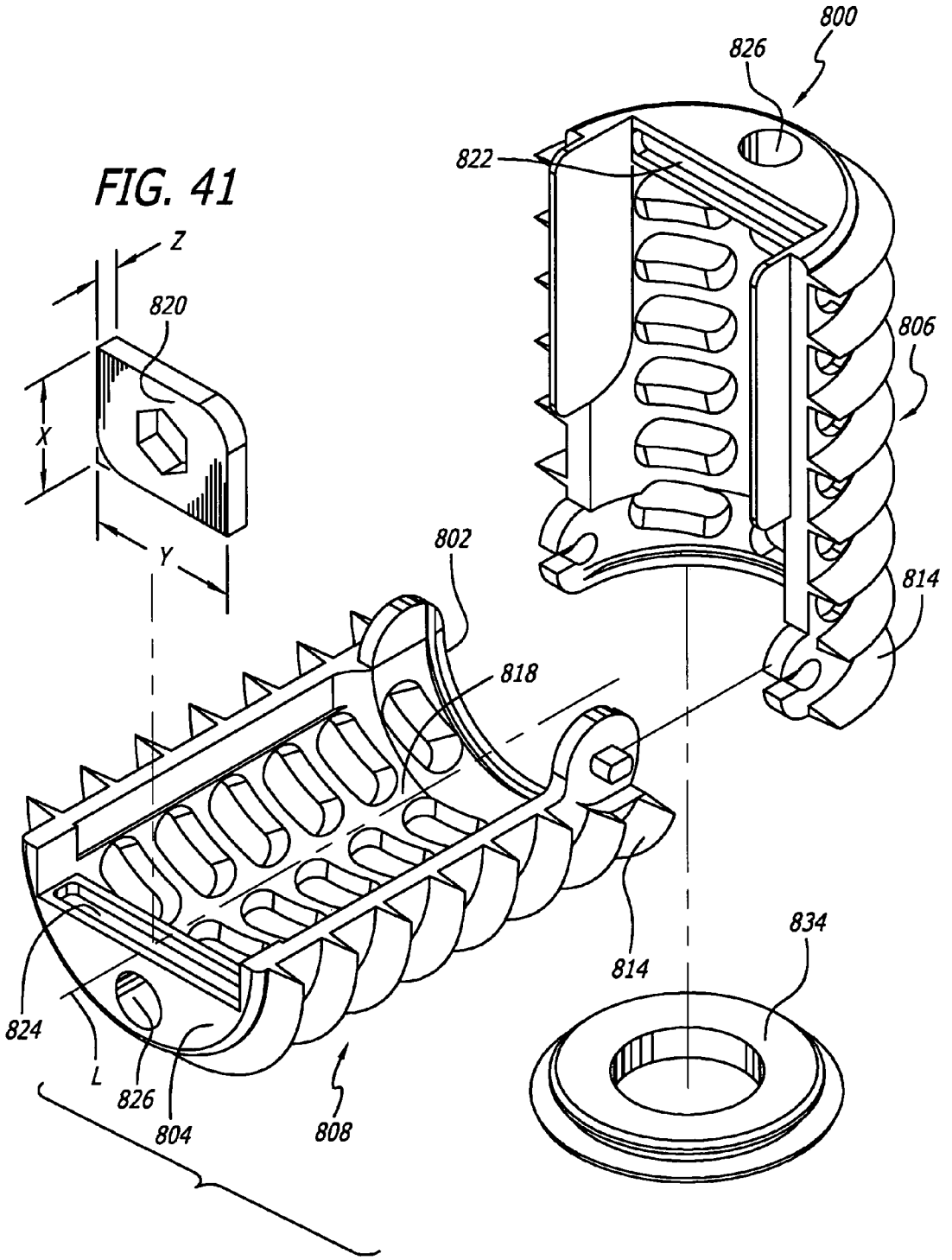
FIG. 41
800
826
822
Z
820
X
Y
806
802
814
818
824
L
826
804
808
814
834

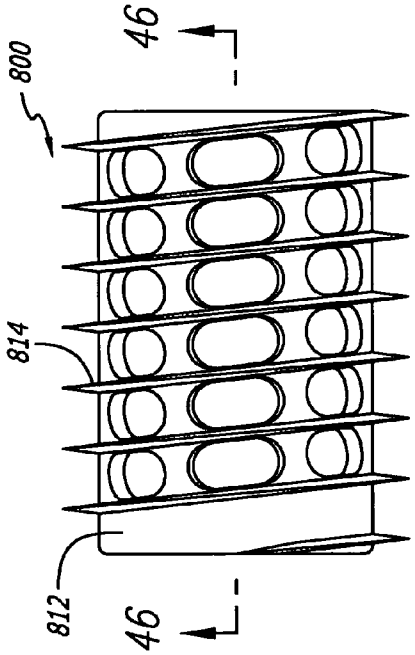

FIG. 42

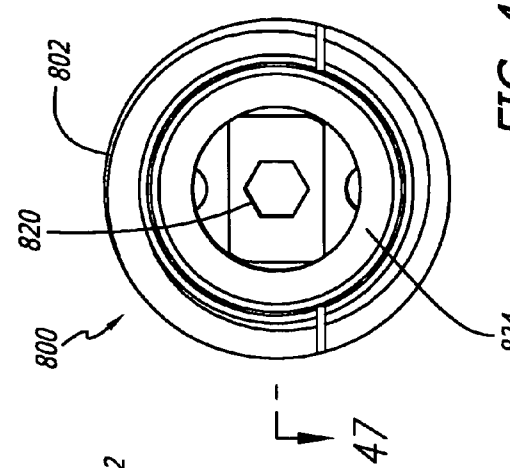

FIG. 45

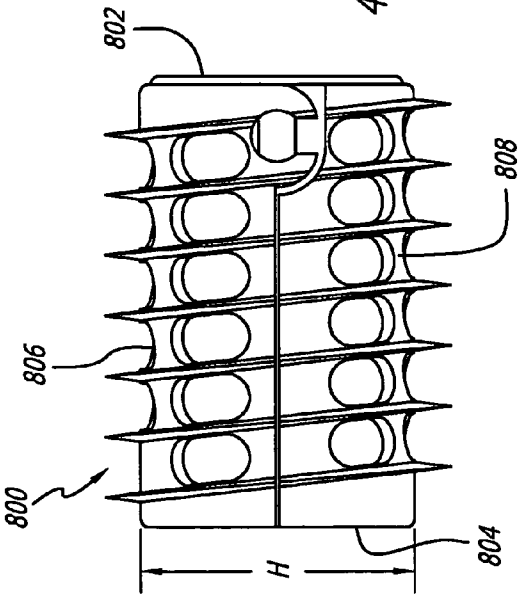

FIG. 44

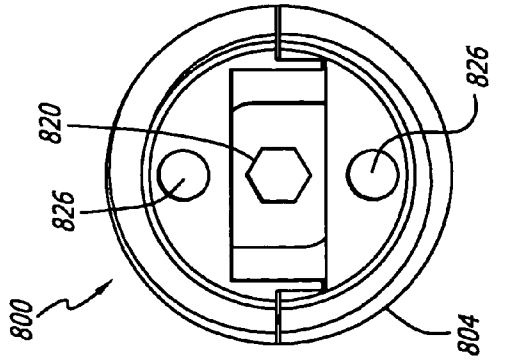

FIG. 43

FIG. 46

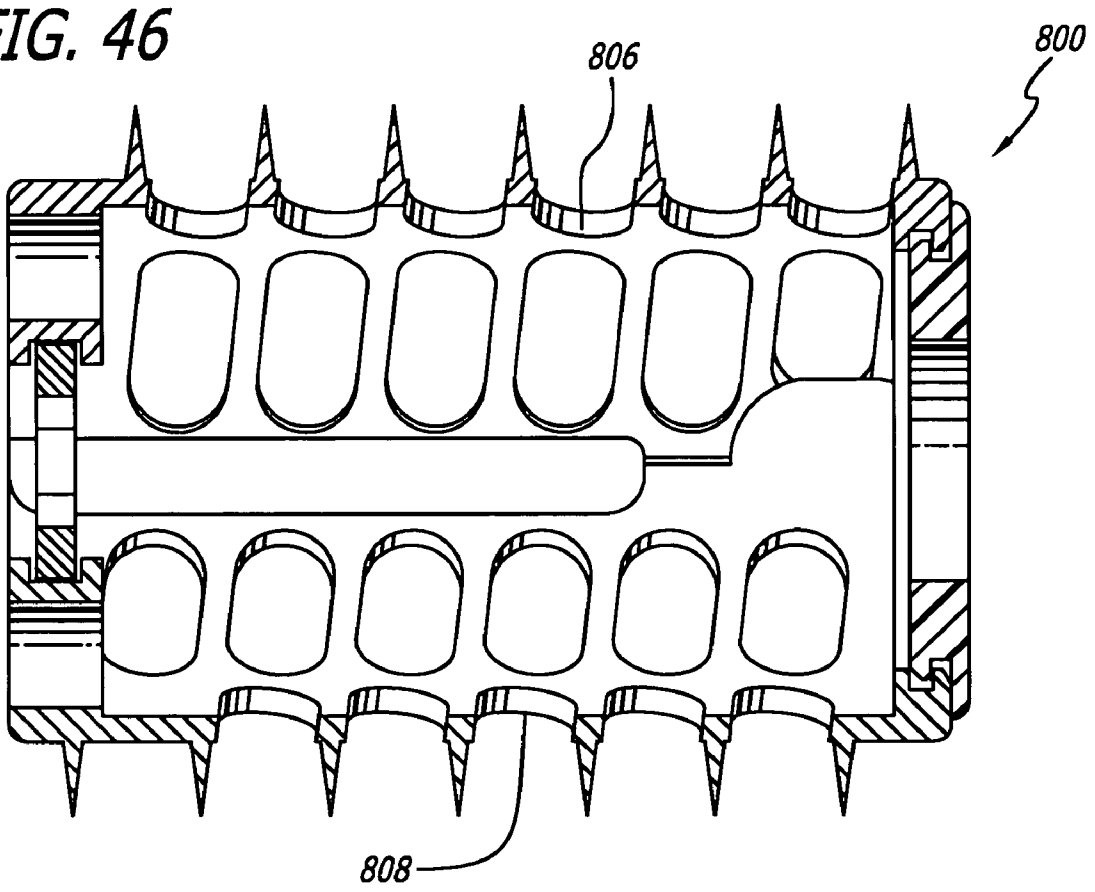

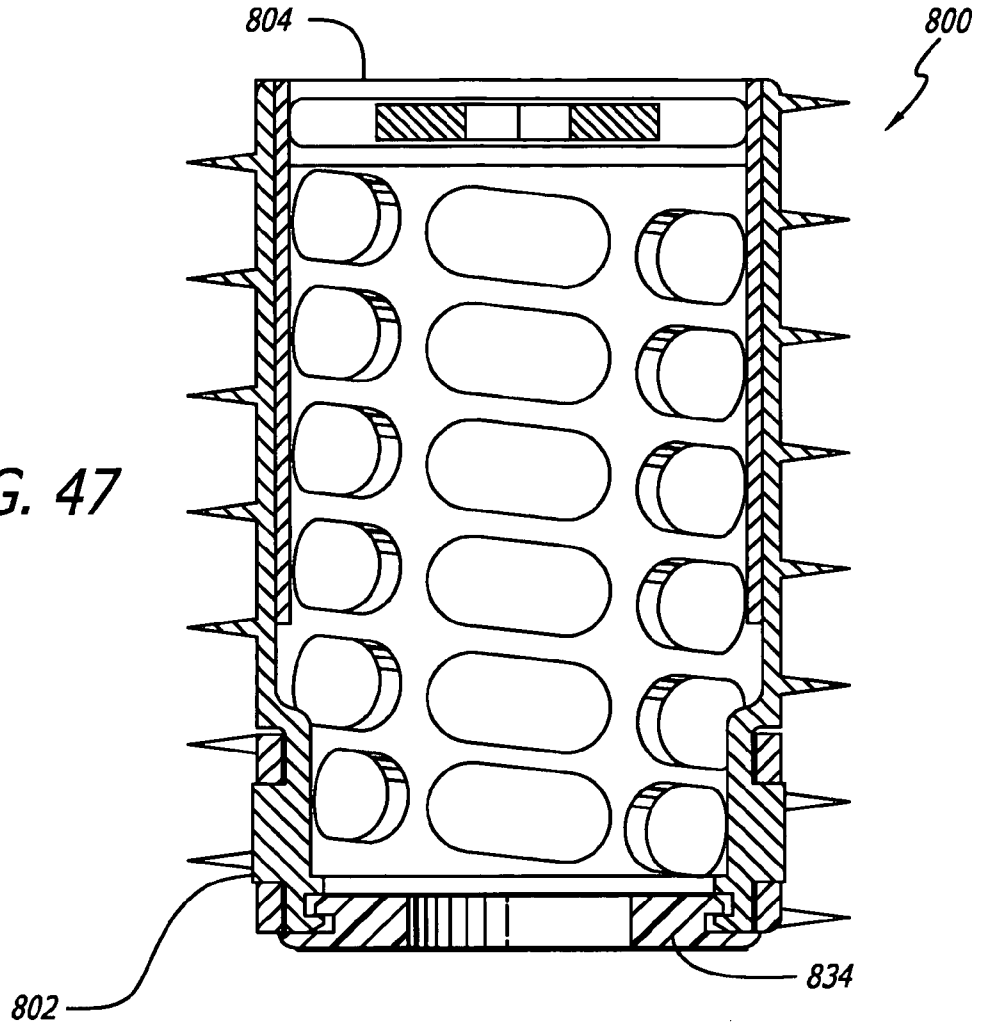

FIG. 47

FIG. 48

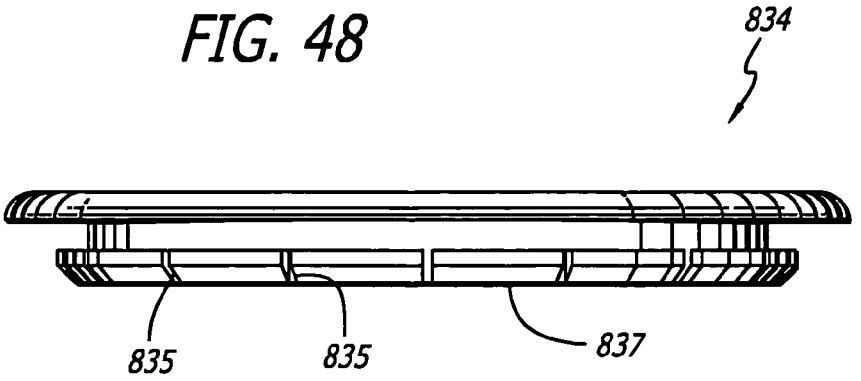

FIG. 49

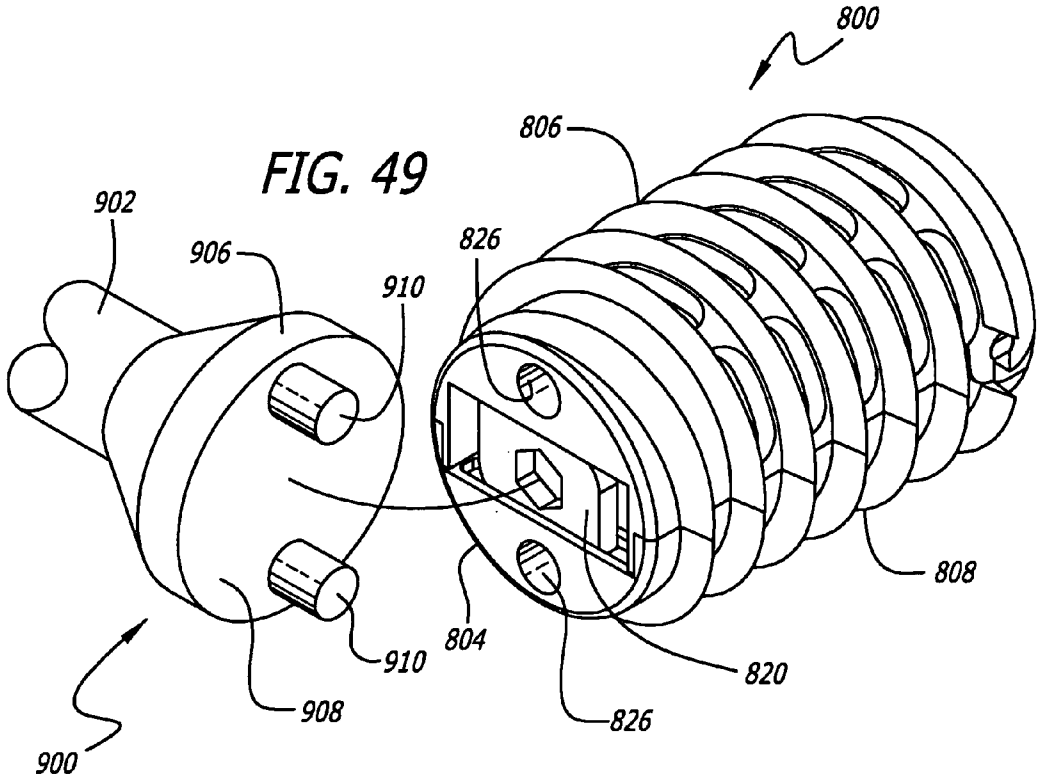

FIG. 50

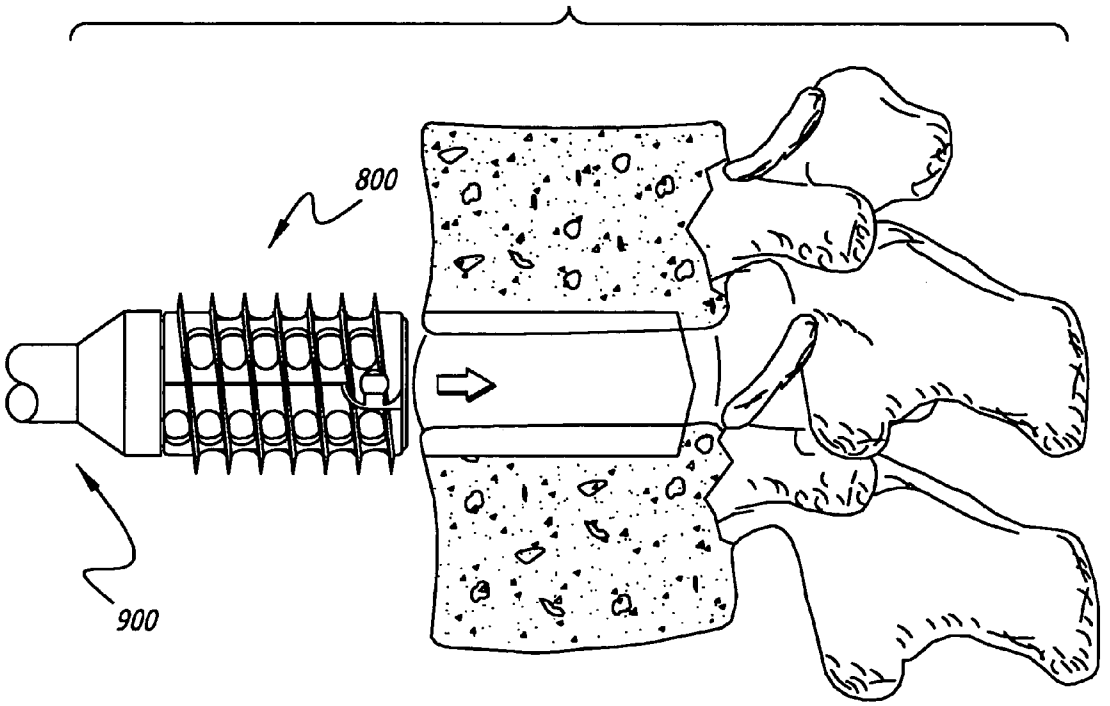

FIG. 51

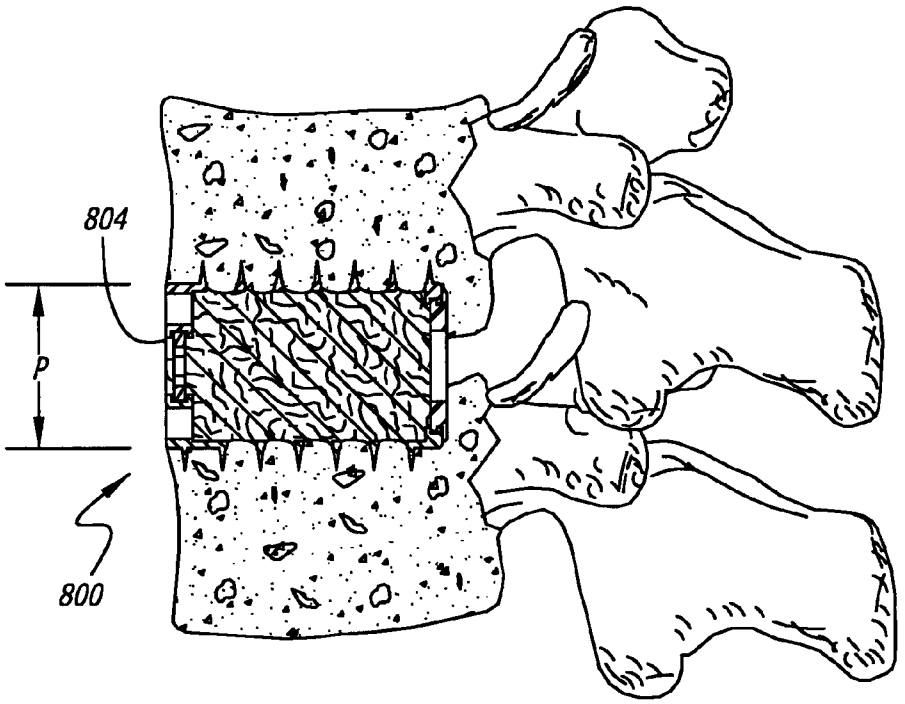

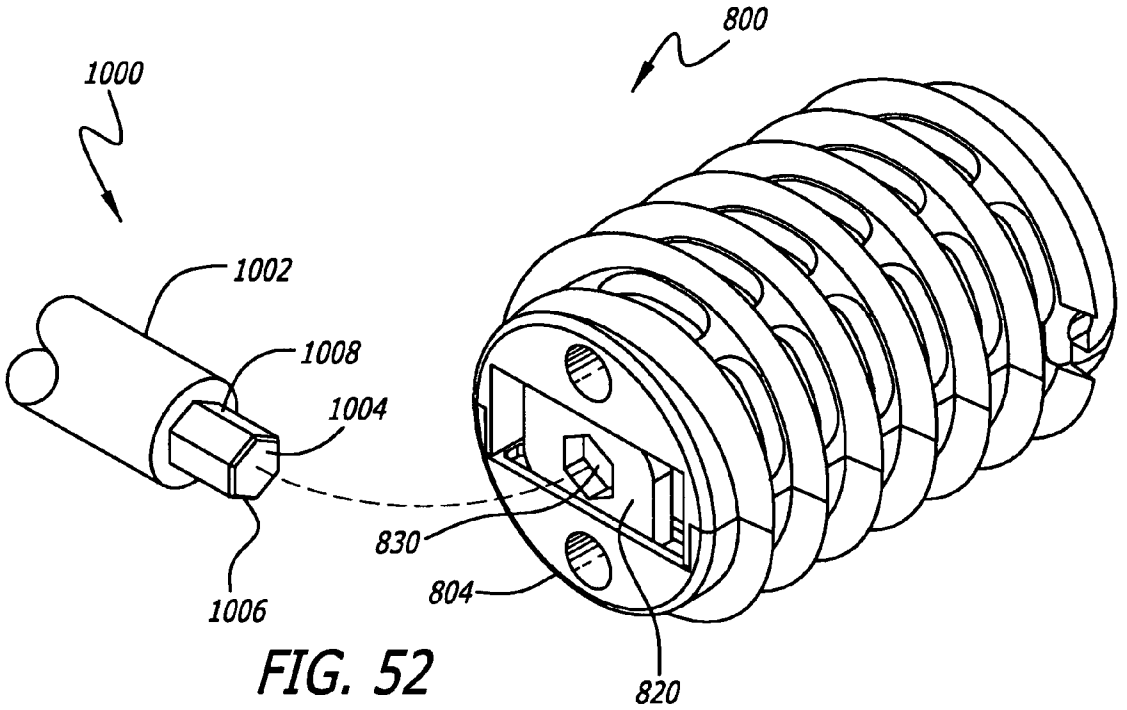

FIG. 52

FIG. 53

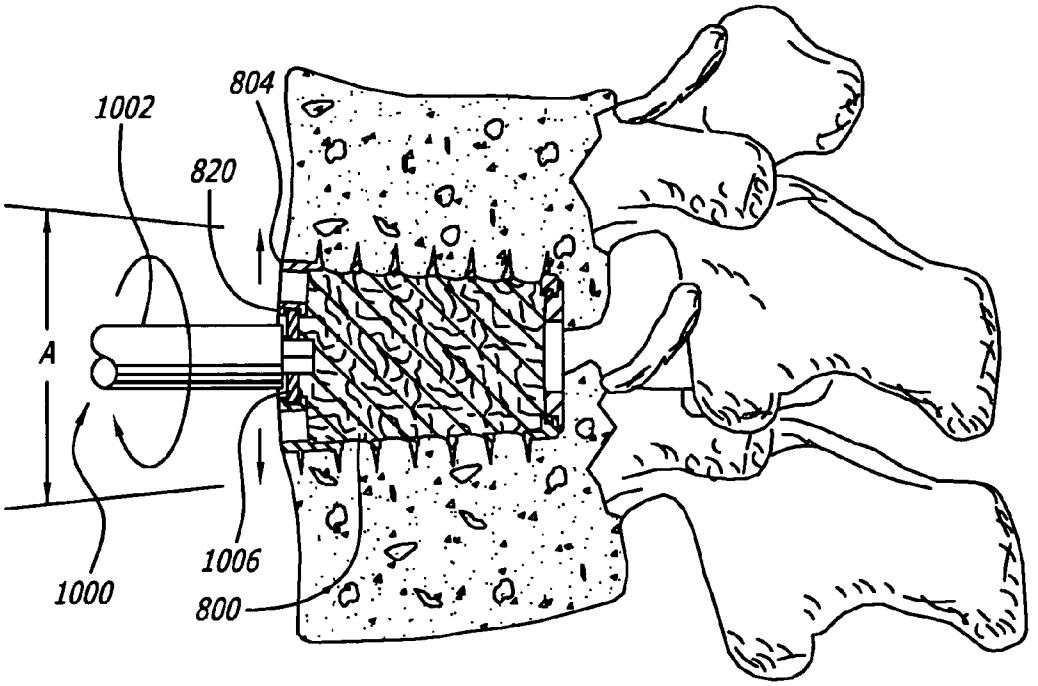

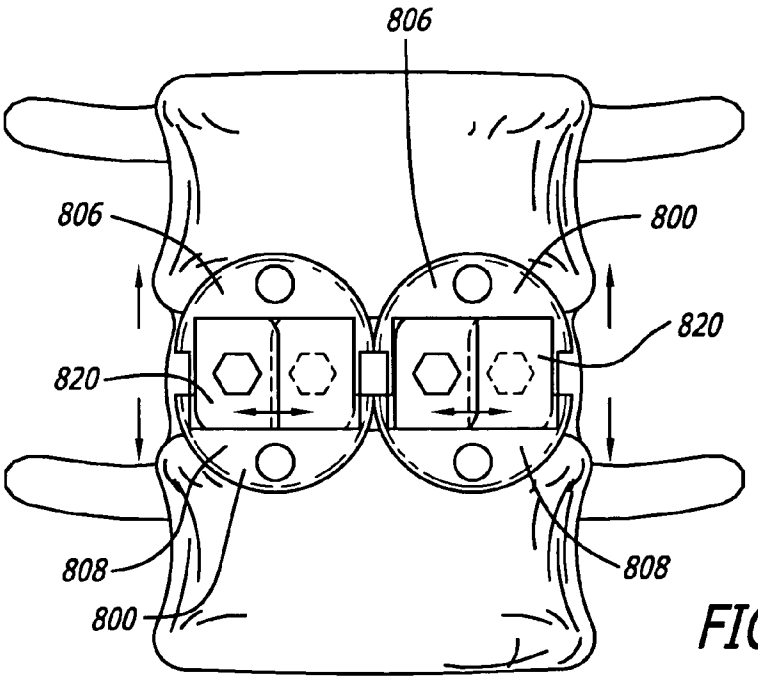

FIG. 54

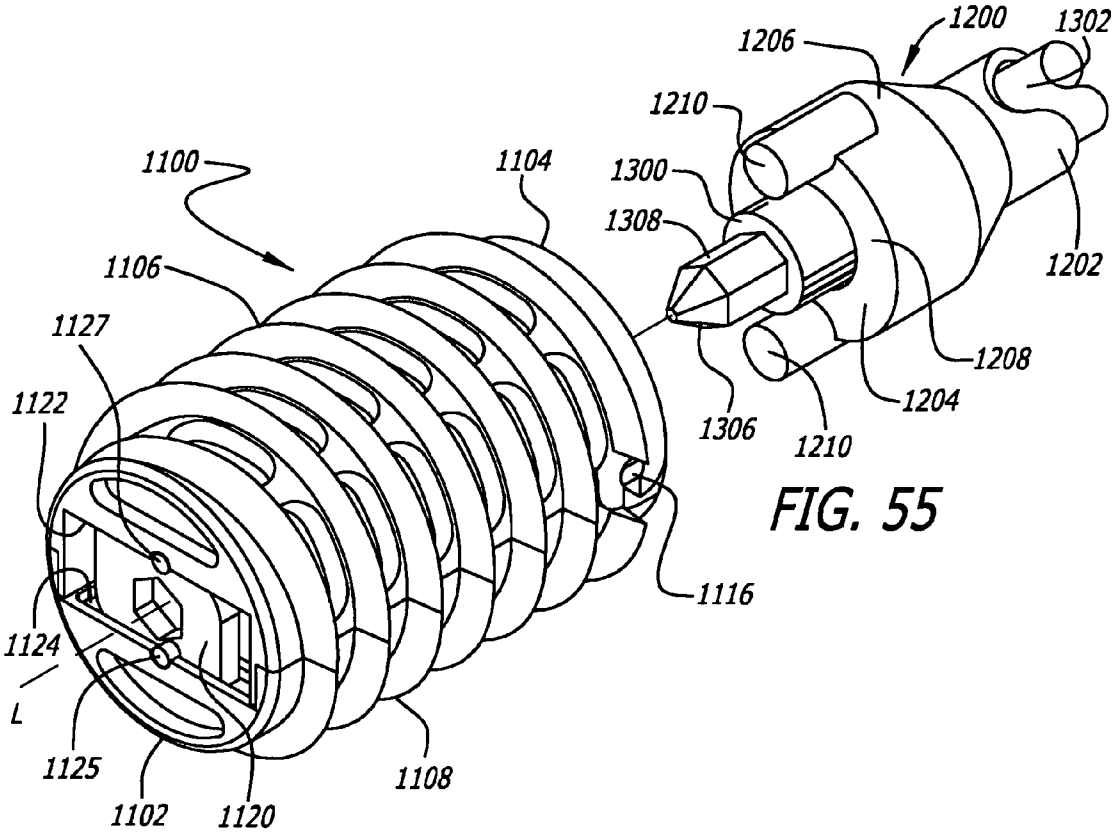
1200
1302
1206
1210
1100
1104
1300
1308
1202
1106
1127
1208
1204
1122
1306
1210
1116
1124
L
1125
1108
1102
1120

FIG. 55

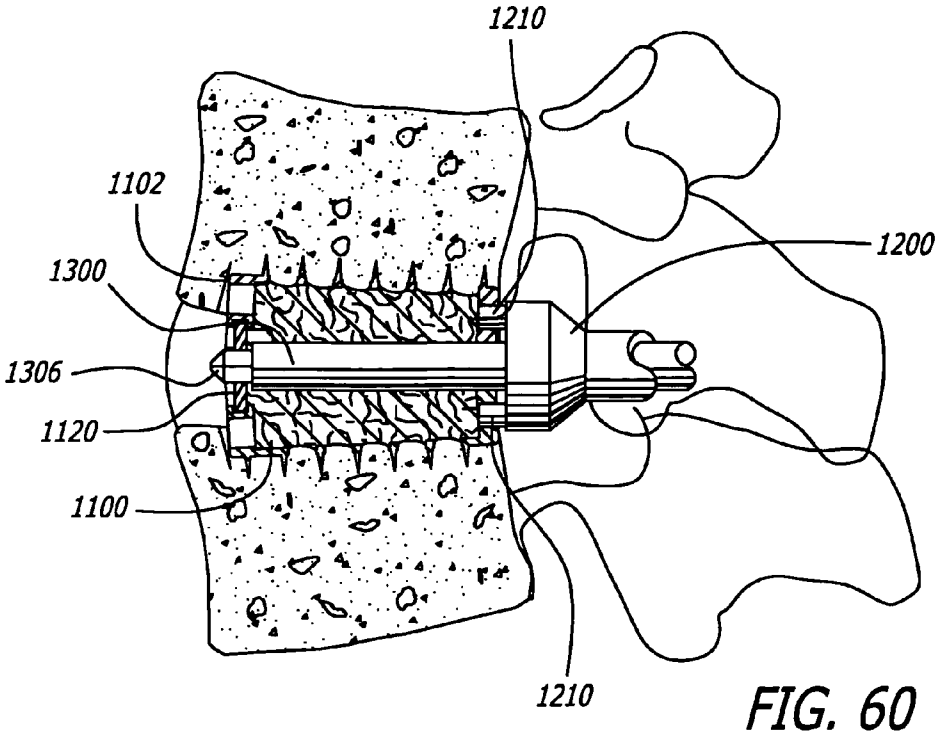
1210
1102
1200
1300
1306
1120
1100
1210

FIG. 60

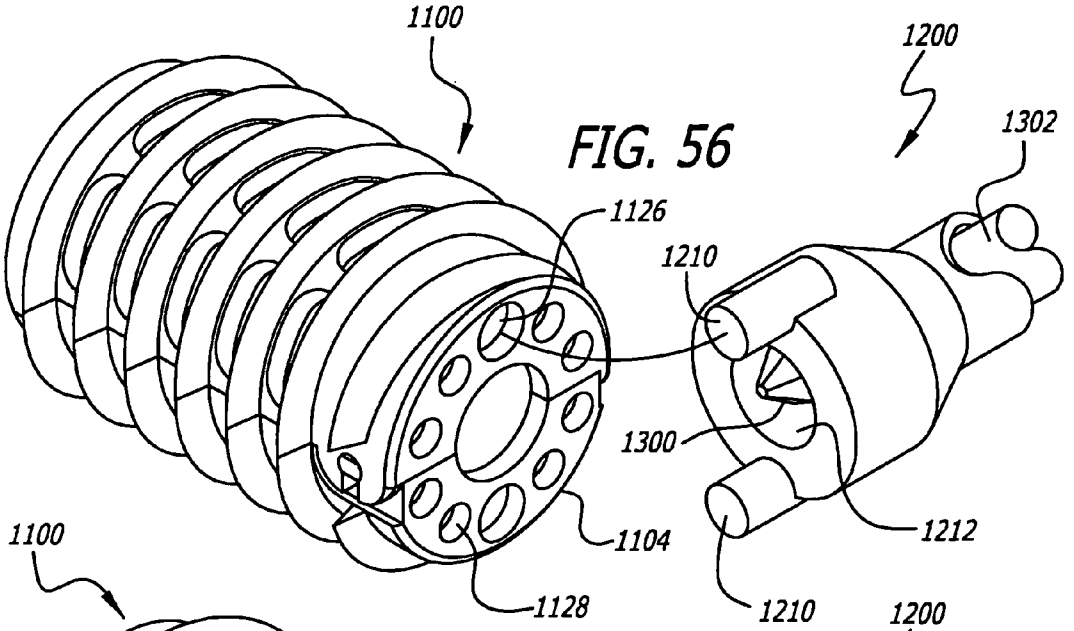

FIG. 56

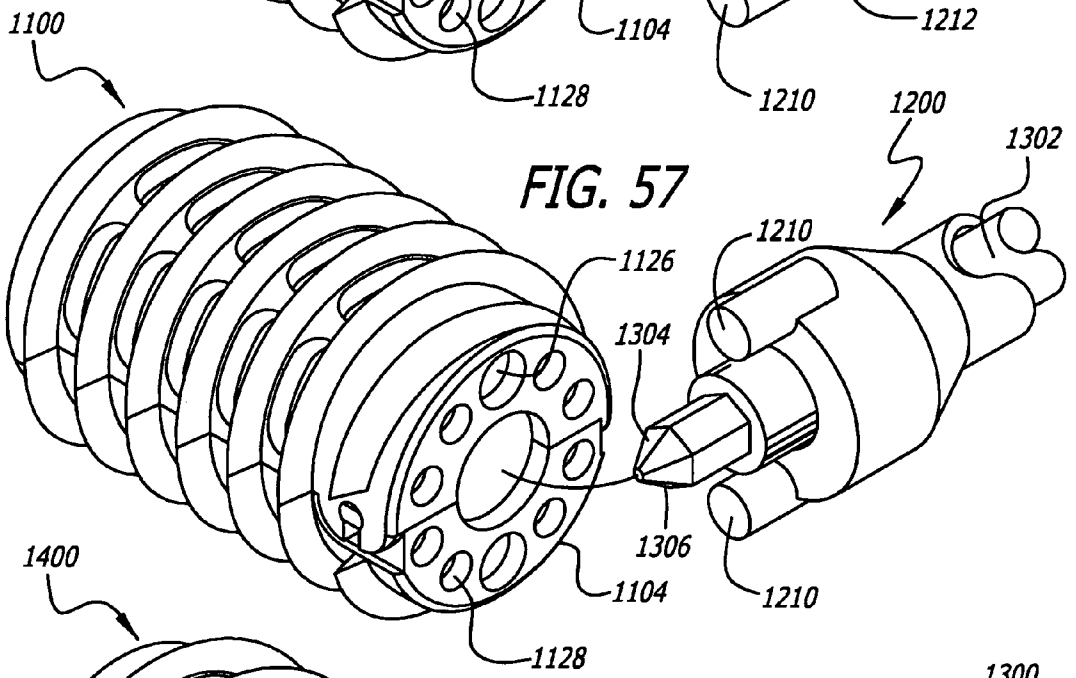

FIG. 57

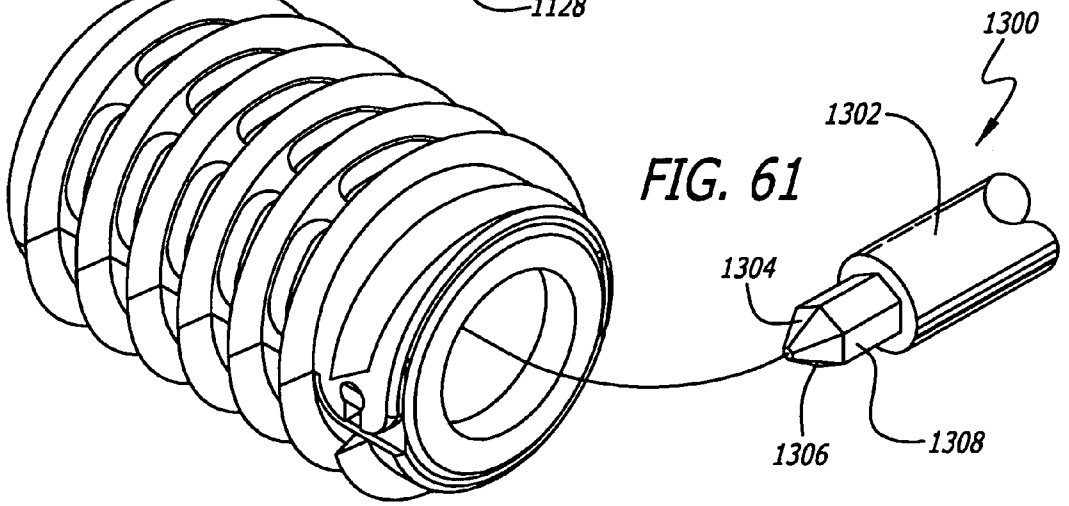

FIG. 61

FIG. 58

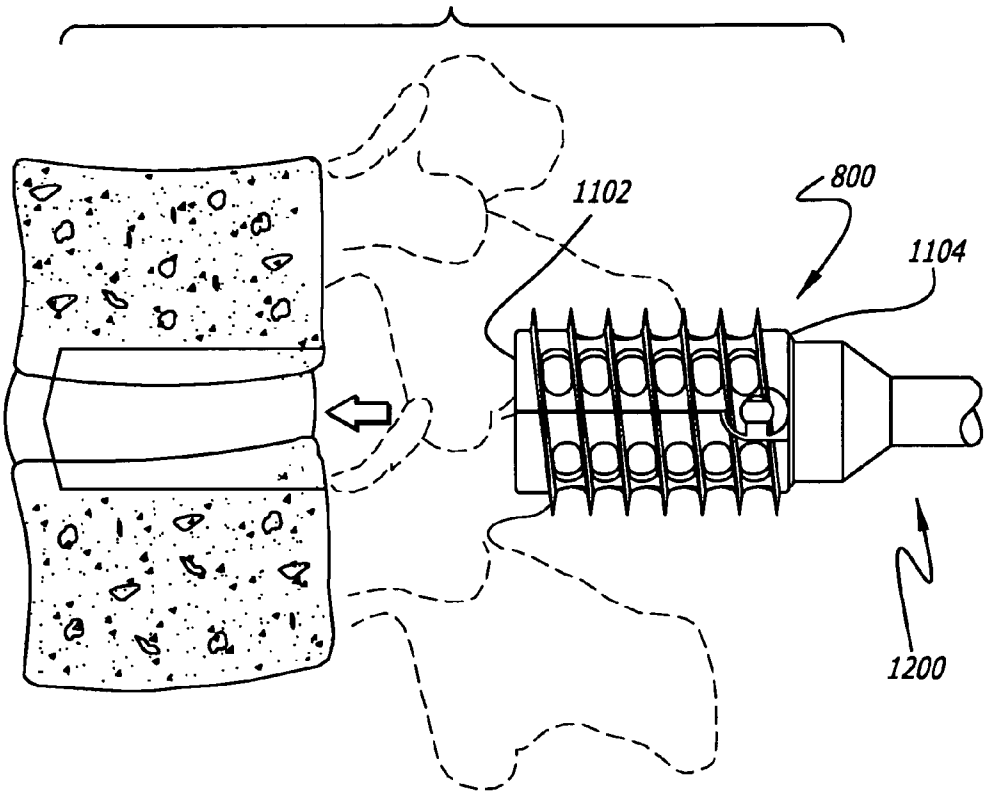

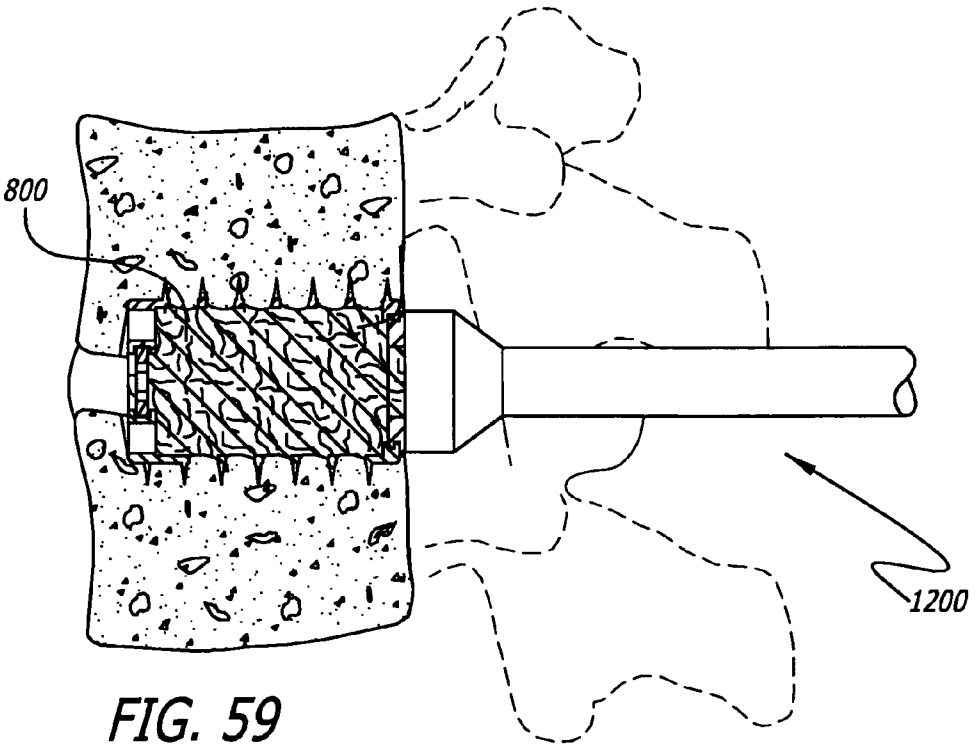

FIG. 59

FIG. 62

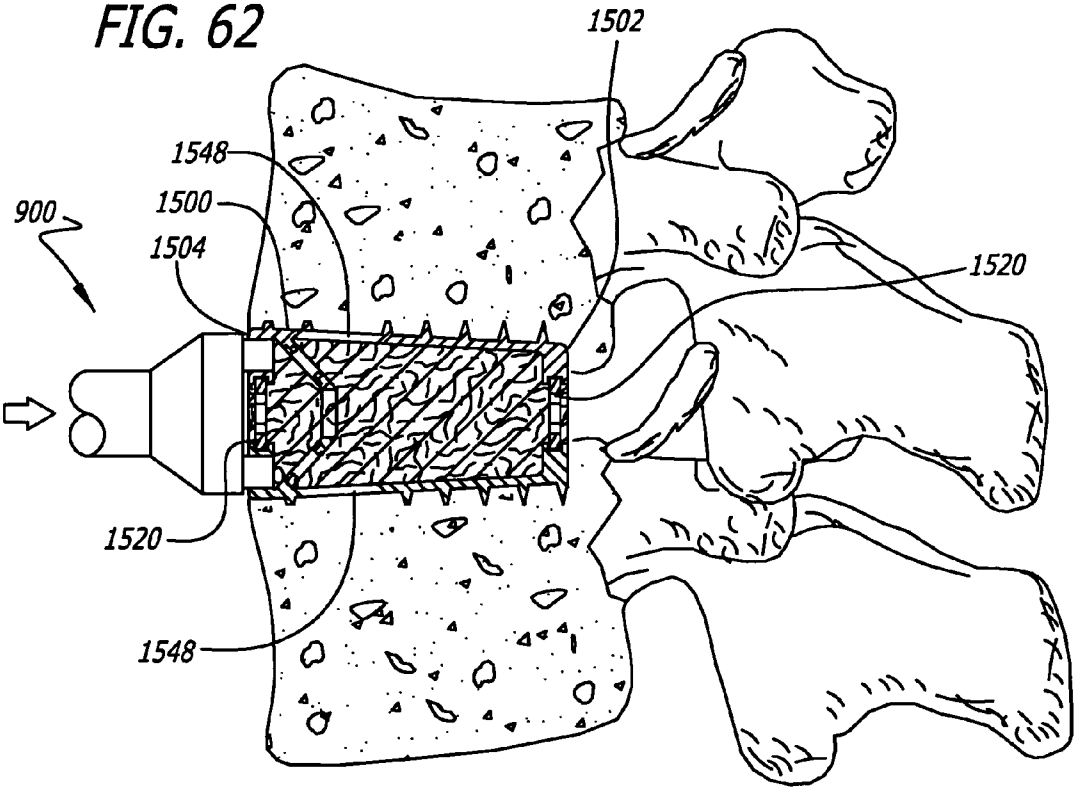
1502
1548
1500
900
1504
1520
1520
1548

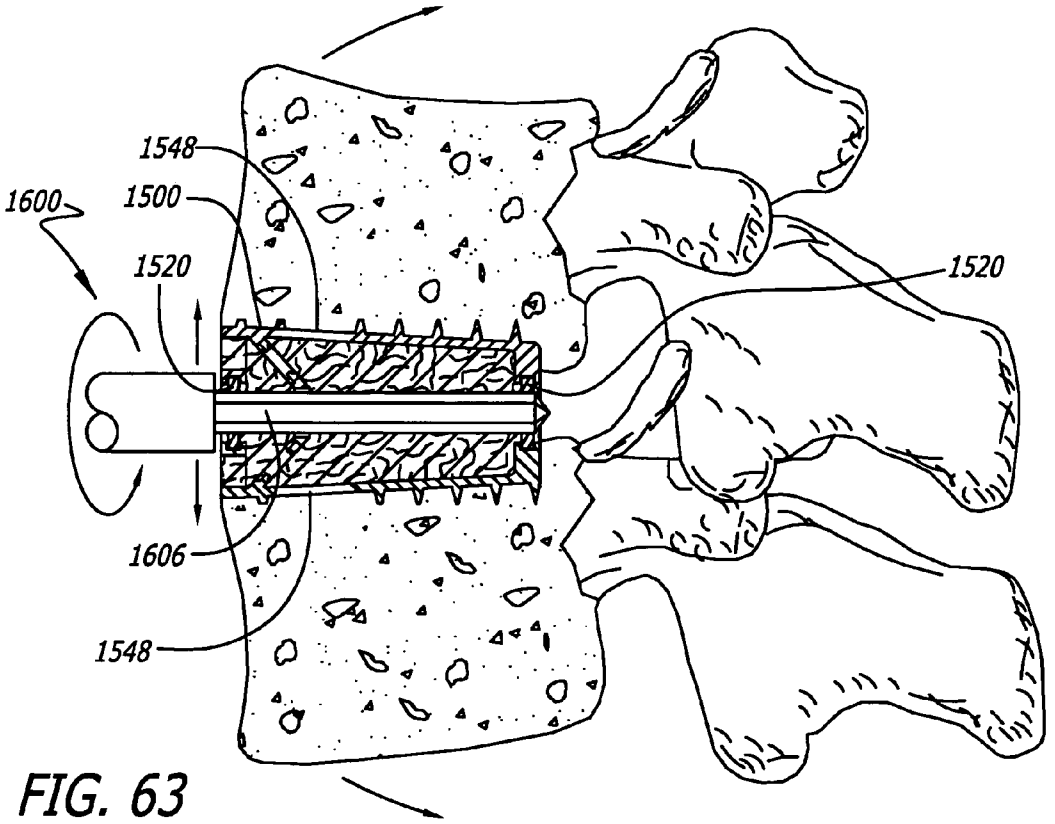
1548
1600
1500
1520
1520
1606
1548

FIG. 63

FIG. 64

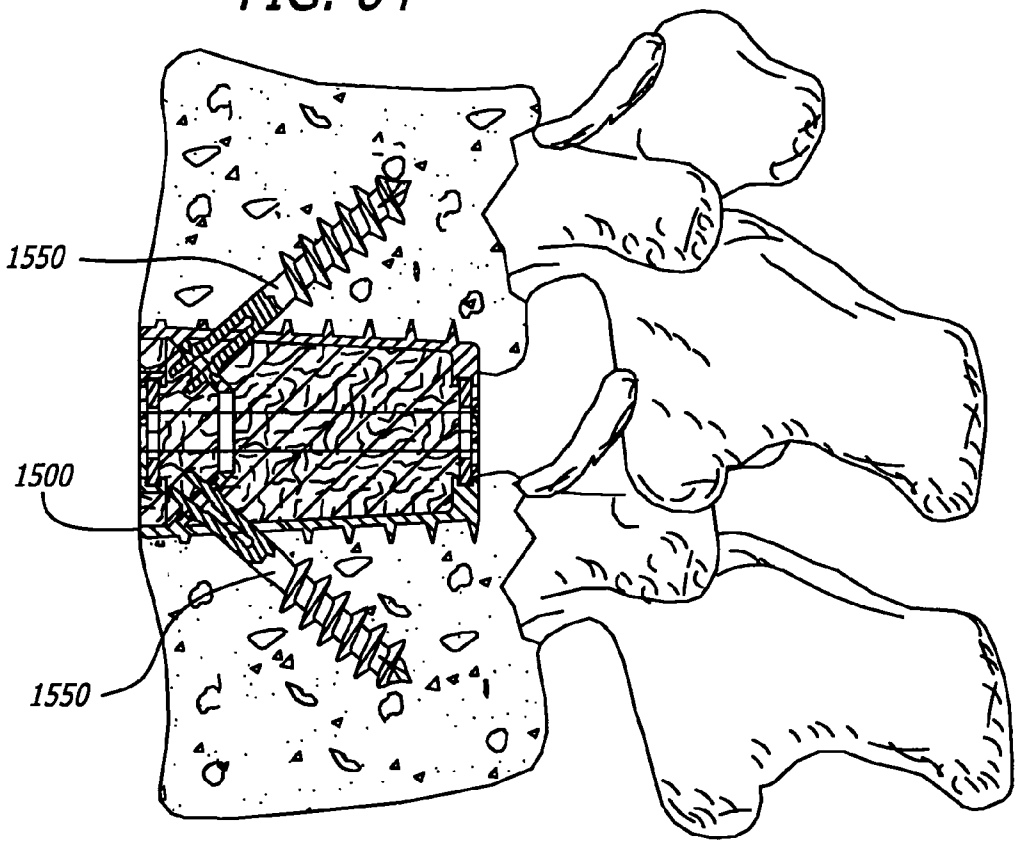

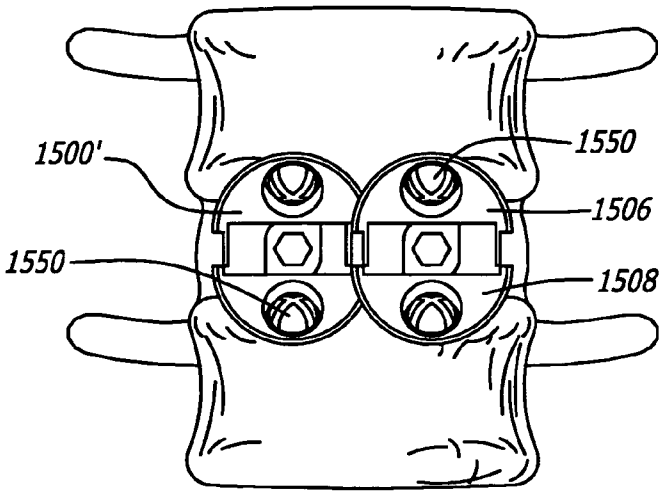

FIG. 65

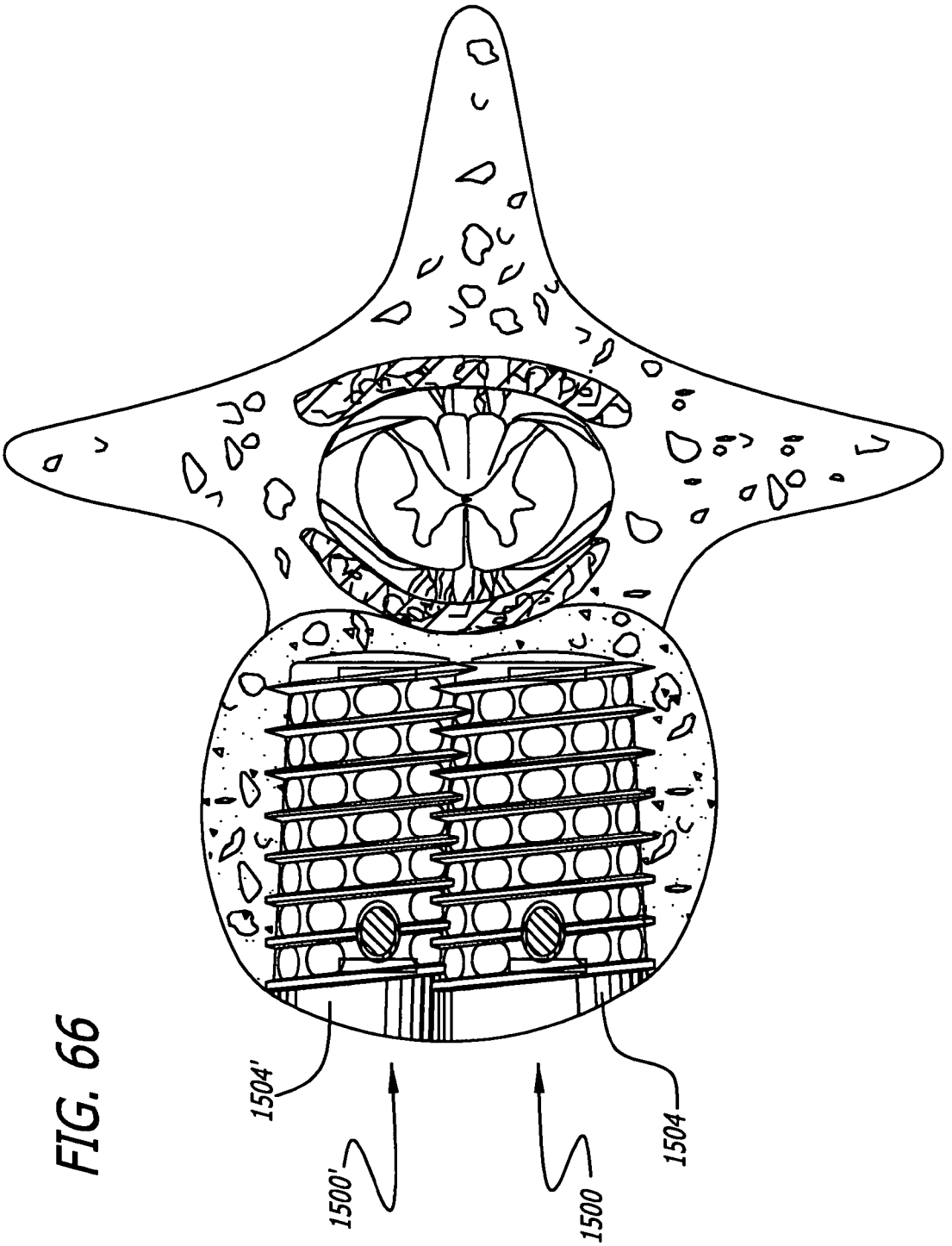

FIG. 66

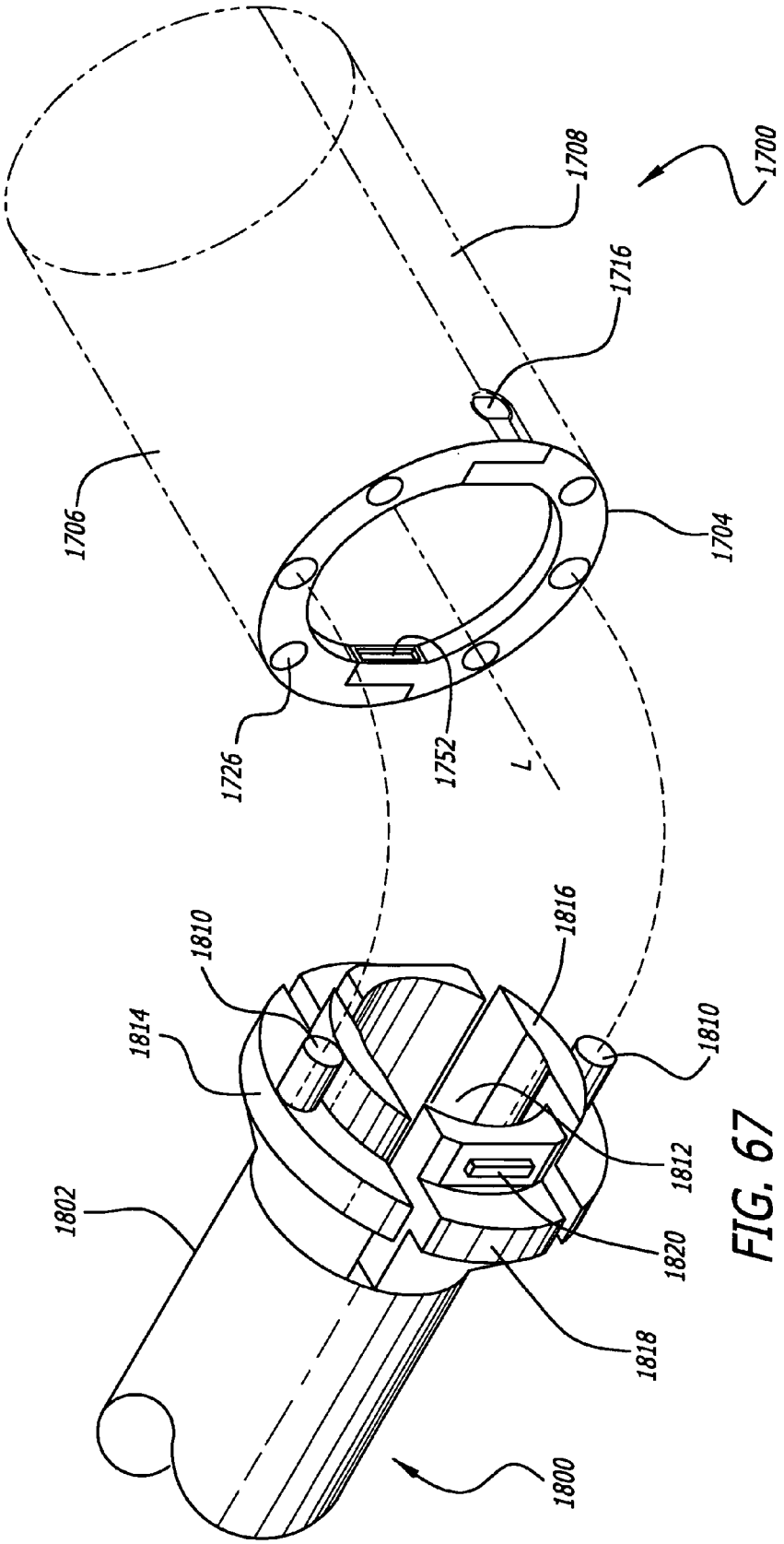
1700
1708
1716
1706
1704
1726
1752
L
1810
1816
1814
1810
1812
1802
1820
1818
1800

FIG. 67

FIG. 68

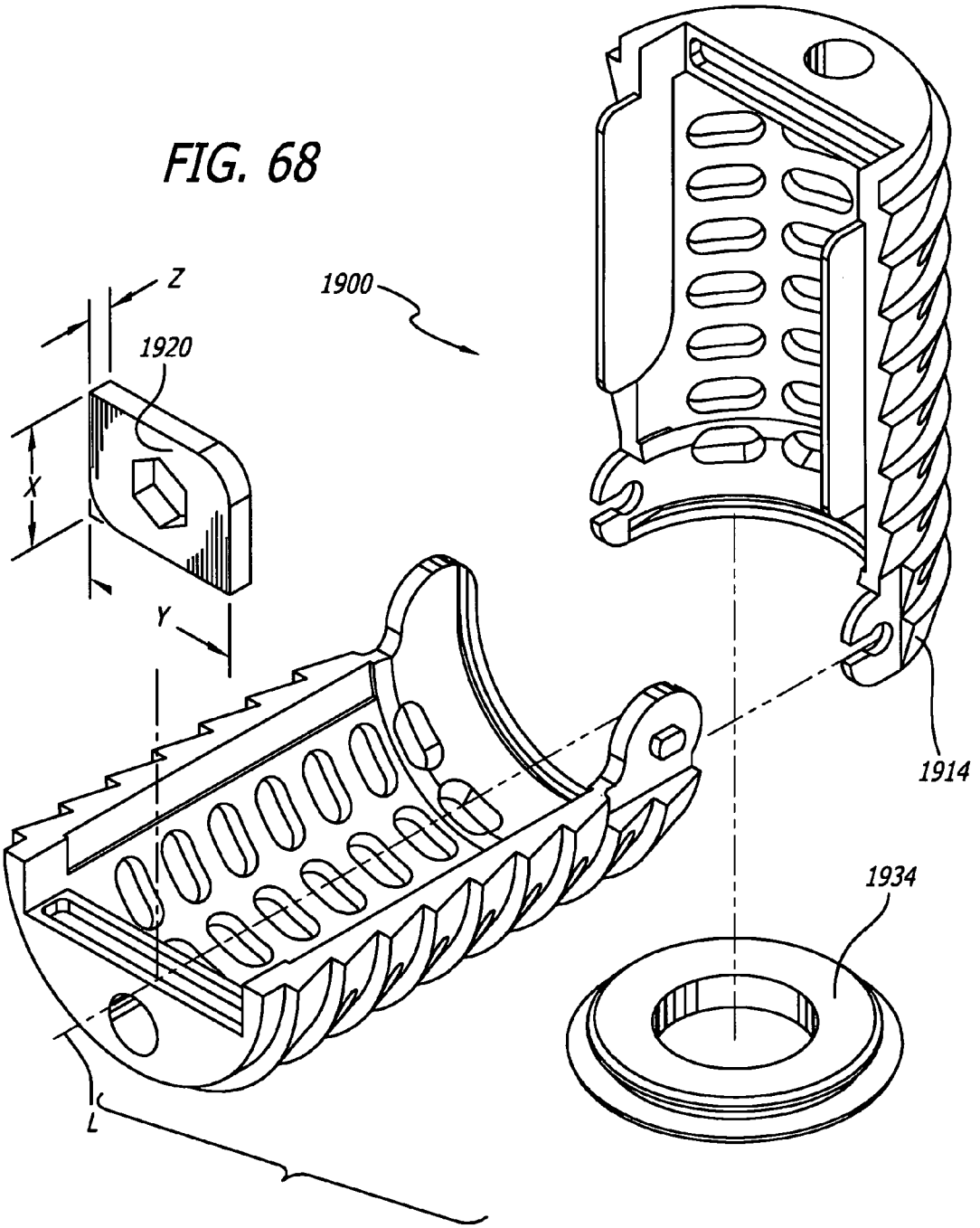

INSTRUMENTATION FOR INSERTING AN EXPANDABLE INTERBODY SPINAL FUSION IMPLANT

RELATED APPLICATIONS

This application claims priority to provisional application No. 60/266,426, filed Feb. 4, 2001, and provisional application Ser. No. 60/277,890, filed Mar. 21, 2001, both of which are incorporated by reference herein.

BACKGROUND OF THE INVENTION

1. Field of the Invention

The present invention relates generally to instruments and methods for inserting interbody spinal implants into an implantation space in the spine, and more particularly for use with expandable interbody (for placement at least in part between adjacent vertebral bodies in the space previously occupied by disc material) spinal fusion implants for the immobilization of vertebrae.

2. Description of the Related Art

Expandable spinal fusion implants have height raising capabilities that are utilized once the implant is initially positioned. Such height raising capability may be utilized within the spine anteriorly, posteriorly, or both and to various extents, respectively so as to raise the front, back, or both of the implant by the same or various amounts. More particularly, such implants have upper and lower surfaces of upper and lower members that in a first or insertion position are collapsed relative to one another and in a second or deployed position are adapted to contact the adjacent vertebral bodies.

Expandable fusion implants offer the advantage of allowing for the placement of a potentially larger implant through a smaller opening in a patient's body. Selective expansion along a single direction, (e.g. vertically only when correctly installed) offers the advantage of increasing the height of the implant and therefore the distraction of the disc space, but without a concomitant increase in the width of the implant.

Expandable fusion implants are known in the related art. The first expandable spinal fusion (allowing for the growth of bone from vertebral body to vertebral body through the implant) implant was invented by Michelson and also is disclosed in U.S. Pat. No. 5,776,199, filed Jun. 28, 1988, which is hereby incorporated by reference herein.

Push-in spinal fusion implants having upper and lower non-arcuate surfaces adapted for placement in contact with adjacent vertebral bodies are known in the related art. Such a push-in spinal fusion implant was invented by Michelson and is disclosed in U.S. Pat. No. 5,776,199, incorporated by reference above.

Push-in spinal fusion implants having upper and lower arcuate portions oriented toward the adjacent vertebral bodies and designed to engage the vertebral bodies along arcuate cuts therein typically formed by a drill are known in the related art. Such a push-in spinal fusion implant was invented by Michelson and is disclosed in U.S. Pat. No. 5,593,409, filed Feb. 17, 1995, which is hereby incorporated by reference. Push-in spinal fusion implants offer the advantage of being easily positioned in the implantation space and of having excellent fastening or holding features.

Threaded spinal fusion implants requiring rotation for insertion into the implantation space in the spine are known in the related art. The first artificial threaded spinal fusion implant was invented by Michelson and is disclosed in U.S. Pat. No. 5,015,247, which is hereby incorporated by reference. Threaded spinal fusion implants offer the advantage of being easily positioned in the implantation space and of having excellent fastening or holding features. Examples of instruments and methods of inserting spinal implants are taught by Michelson in U.S. Pat. Nos. 5,484,437 and 6,080,155, the disclosures of which are hereby incorporated by reference herein.

Lordotic or tapered, push-in spinal fusion implants are also known in the art. By way of example, Michelson has invented such implants as disclosed in U.S. Pat. No. 5,609,635, filed Jun. 7, 1995, which is hereby incorporated by reference. Lordotic, frusto-conical, or tapered, threaded spinal fusion implants are also known in the art. By way of example, Michelson has invented such implants as disclosed in U.S. Pat. No. 6,210,412, which is hereby incorporated by reference. Lordotic, frusto-conical, or tapered, push-in spinal fusion implants are also known in the art. By way of example, Michelson has invented such implants as disclosed in U.S. application Ser. No. 08/484,928, filed Jun. 7, 1995, which is hereby incorporated by reference. Lordotic or tapered, spinal fusion implants have the advantage of restoring or enhancing spinal lordosis.

Expandable interbody spinal fusion implants preferably may be inserted from an anterior approach to the spine, an approach posterior to the vertebral transverse processes, to either side of the spinal midline in pairs, or from an anterior lateral approach to the spine. Such expandable implants are adapted to be capable of increasing in height anteriorly (at their leading ends) or posteriorly (at their trailing ends) from a first collapsed state, to a second expanded state for the purpose of increasing spinal lordosis at that interspace, or may be capable of increasing in height both anteriorly and posteriorly. During installation of expandable interbody spinal fusion implants, it is desirable that the surgeon have the ability to precisely control the implant with the appropriate instruments and methods to load the implant with appropriate bone growth promoting material, to insert the implant into the implantation space, to deploy the implant to a final expanded state, and to further load the implant with bone growth material if so desired.

There exists a need for instruments and methods for use with expandable interbody spinal fusion implants providing for all of the aforementioned needs individually or in combination.

SUMMARY OF THE INVENTION

In accordance with the purposes of the present invention, as embodied and broadly described herein, an implant holder of this invention is provided for inserting an interbody spinal implant into the spine of a human; the implant holder includes an outer sleeve having a longitudinal axis, a passage along the longitudinal axis, and a distal end with an implant engagement area adapted to cooperatively engage the implant. The implant holder also includes a shaft having a passage. The shaft is adapted to move along at least a portion of the passage of the outer sleeve. The passage of the shaft is adapted to permit the passage of an instrument or fusion promoting substances therethrough.

In accordance with the purposes of another embodiment of the present invention, as embodied and broadly described herein, an apparatus of this invention is provided for inserting an expandable spinal implant having an expander adapted to increase the height of the implant; the apparatus including an implant holder having a longitudinal axis, a passage along the longitudinal axis, and a distal end with an implant engagement area adapted to cooperatively engage

the implant. The implant holder also includes an expander driver adapted to engage the expandable implant. The expander driver has a shaft adapted to pass through the passage of the implant holder. The shaft of the expander driver has a distal end adapted to engage the expander of the expandable implant.

In accordance with the purposes of another embodiment of the present invention, as embodied and broadly described herein, an implant holder is provided for inserting an expandable spinal implant, the implant holder remaining attached to the spinal implant while the spinal implant is expanded from an unexpanded position to an expanded position within an implantation space prepared for receiving the spinal implant.

In accordance with the purposes of yet another embodiment of the present invention, as embodied and broadly described herein, an implant holder of this invention is provided for inserting an interbody spinal implant having a trailing end; the implant holder including a body having a distal end, a proximal end, and a length therebetween. The implant holder also includes at least two extensions extending from the distal end of the body. The extensions have an interior surface and an exterior surface opposite the interior surface. The extensions are adapted to be moved toward one another by an inward force applied to the exterior surface to permit the extensions of the implant holder to pass into the trailing end of the implant and for the exterior surface to cooperatively engage the trailing end of the implant after the inward force is removed.

In accordance with the purposes of a further embodiment of the present invention, as embodied and broadly described herein, a method of this invention is provided for expanding an expandable spinal implant having an expander adapted to increase the height of the implant. The method includes the steps of providing an implant holder having a passage therethrough adapted to receive an expander driver; attaching the implant holder to the implant; inserting the expander driver having a shaft through the passage of the implant holder to engage the expander of the implant; and rotating the expander driver to expand the expandable implant.

In accordance with the purposes of another embodiment of the present invention, as embodied and broadly described herein, a method, of this invention is provided for loading a spinal implant with fusion promoting substances. The method includes the steps of providing an implant holder having a passage therethrough; attaching the implant holder to the implant; and passing fusion promoting substances through the passage of the implant holder into the implant.

In accordance with the purposes of yet another embodiment of the present invention, as embodied and broadly described herein, a method of this invention is provided for inserting an interbody spinal implant into an implantation space, the method including the steps of providing an implant holder having a body having a distal end, the implant holder having extensions extending from the distal end of the body, the extensions having an exterior surface, the extensions being adapted to be moved toward one another by an inward force applied to the extensions to permit the extensions of the implant holder to pass into the trailing end of the implant and for the exterior surface to cooperatively engage the implant after the inward force is removed; passing the extensions of the implant holder into the trailing end of the implant; and cooperatively engaging the exterior surface of the extensions of the implant holder to the implant.

The accompanying drawings, which are incorporated in and constitute a part of this specification, are by way of example only and not limitation, and illustrate several embodiments of the invention, which together with the description, serve to explain the principles of the invention. The scope of the invention is limited only by the scope of the claims as from the present teachings other embodiments of the present invention shall be apparent to those skilled in the art.

BRIEF DESCRIPTION OF THE DRAWINGS

FIG. **1** is an exploded perspective view of an embodiment of a posterior lumbar expandable non-arcuate impacted interbody spinal fusion implant for use with the instrumentation and method of the present invention;

FIG. **1**A is a perspective view of an alternative embodiment of a blocker in the form of an expander for use with the implant of FIG. **1**;

FIG. **1**B is a perspective view of another alternative embodiment of a blocker for use with the implant of FIG. **1**;

FIG. **1**C is a perspective view of yet another alternative embodiment of a blocker for use with the implant of FIG. **1**;

FIG. **2** is a leading end view of the implant of FIG. **1**;

FIG. **3** is a top view of the implant of FIG. **1**;

FIG. **4** is a trailing end view of the implant of FIG. **1**;

FIG. **5** is a side view of the implant of FIG. **1**;

FIG. **6** is a cross-sectional side view along the mid-longitudinal axis of the implant of FIG. **1**;

FIG. **7** is a leading end perspective view of the implant of FIG. **1**;

FIG. **8** is a front view of one embodiment of an expander of FIG. **1**;

FIG. **9** is a side elevation view of the expander of FIG. **8**;

FIG. **10** is a schematic representation of a geometric configuration of a cross-section of an embodiment of an expander for use with the instrumentation and method of the present invention;

FIG. **11** is a top plan view of an anterior lumbar expandable non-arcuate impacted interbody spinal fusion implant having two expanders shown in dashed line for use with the instrumentation and method of the present invention from the anterior approach to the spine;

FIG. **12** is a top plan view of the bottom member of another preferred embodiment of an anterior lumbar expandable non-arcuate interbody spinal fusion implant having a set of two expanders positioned on both sides of the implant mid-longitudinal axis for use with the instrumentation and method of the present invention from the anterior approach to the spine;

FIG. **13** is a side view of an implant end cap shown in partial cross section for use with the implant of FIG. **12**;

FIG. **14** is a top plan view of another preferred embodiment of a posterior lumbar expandable non-arcuate interbody spinal fusion implant for use preferably in pairs with the instrumentation and method of the present invention from the posterior approach to the spine;

FIG. **15** is a top plan view in partial cross section of one embodiment of an implant holder instrument of the present invention shown in a retracted state for inserting an implant, such as for example the implant of FIG. **1**;

FIG. **16** is a side elevation view in partial cross section of the holder instrument of FIG. **15**;

FIG. **17** is a top plan view of one embodiment of an expander driver instrument of the present invention for rotating an expander, such as for example the expander of FIG. **1**;

FIG. **18** is a side elevation view of the expander driver instrument of FIG. **17**;

FIG. **19** is a top plan view of the implant of FIG. **1** in partial cross section in a non-expanded state and a top plan view in partial cross section of the holder instrument of FIG. **15** in a retracted state being positioned to engage with the implant;

FIG. **20** is a top plan view in a partial cross section of the holder instrument of FIG. **15** in an extended state, with the side extension members moved apart and engaging the flanges into complementary slots in the trailing end of the implant of FIG. **1** shown in partial cross section;

FIG. **21** is a top plan view of the holder instrument of FIG. **15** in partial cross section being rotatively locked in the extended state to keep the side extension members in engagement with the trailing end of the implant of FIG. **1** shown in partial cross section;

FIG. **22** is an exploded top plan view of the expander driver instrument of FIG. **17** being inserted into the holder instrument of FIG. **15** and into the implant of FIG. **1** shown in partial cross section;

FIG. **23** is a top plan view of the expander driver instrument of FIG. **17** locked into an extended position by first and second spring locks of the holder instrument of FIG. **15** shown in partial cross section, each spring lock adapted to engage with complementary first and second detents on a shaft of the expander driver instrument and about to insert an implant into an implantation space;

FIG. **24** is an enlarged fragmentary top plan view along line **24** of FIG. **23** showing the relationship between the first and second spring locks of the holder instrument and the complementary first and second detents of the expander driver instrument while the expander driver instrument is in the extended position;

FIG. **25** is a rear perspective view of a lumbar segment of a spine with the dural sac retracted to the left showing a prepared recipient implantation site and the holder instrument of FIG. **15** with the expander driver instrument of FIG. **17** inserted therein approaching the disc space between the adjacent vertebral bodies with the implant of FIG. **1** attached thereto;

FIG. **26** is a fragmentary side view of the implant of FIG. **1** being inserted by the holder instrument of FIG. **15** through a guard from a generally posterior approach to the spine into an implantation site formed across a disc space and into two adjacent vertebral bodies of the spine shown in partial cross-section;

FIG. **27**A is a fragmentary side view of the implant of FIG. **1** being inserted by the holder instrument of FIG. **15** from a generally posterior approach to the spine into an implantation site formed across a disc space and into two adjacent vertebral bodies of the spine shown in partial cross-section;

FIG. **27**B is a fragmentary side view of the implant of FIG. **1** inserted by the implant holder of FIG. **15** in an implantation site formed across the disc space and into two adjacent vertebral bodies of the spine shown in partial cross section;

FIG. **28** is a top plan view of a lower vertebral body and the implant of FIG. **1** in partial cross section implanted in an implantation site formed posteriorly across a disc space and the expander driver instrument of FIG. **17** being locked into a retracted position by the second spring lock of the holder instrument of FIG. **15** shown in partial cross section in engagement with the first detent of the expander driver instrument;

FIG. **29** is an enlarged fragmentary top plan view along line **29** of FIG. **28** showing the relationship between the first and second spring locks of the holder instrument and the complementary first and second detents of the expander driver instrument while the expander driver instrument is in the retracted position;

FIG. **30** is a top plan view of a lower vertebral body and the implant of FIG. **1** shown in partial cross section implanted via the holder instrument of FIG. **15** shown in partial cross section in an implantation site formed posteriorly across a disc space and the expander driver instrument of FIG. **17** moving the expander of FIG. **1** to expand the implant;

FIG. **31** is a partial side view of the implant of FIG. **1** and the holder instrument of FIG. **15** with the implant in an expanded position inserted in an implantation site formed across the disc space and into two adjacent vertebral bodies of the spine shown in partial cross section;

FIG. **32** is a side view of the implant of FIG. **1** in partial cross section and holder instrument of FIG. **15** with the expander driver instrument of FIG. **17** engaging the expander of FIG. **1**;

FIG. **33** is a partial cross-sectional leading end view of the implant of FIG. **1** implanted between adjacent vertebral bodies with the expander in the initial insertion position;

FIG. **34** is a partial cross-sectional leading end view of the implant of FIG. **1** implanted between adjacent vertebral bodies with the expander in the final deployed position;

FIG. **35** is a top plan view of the expander driver instrument of FIG. **17** being withdrawn from the implant of FIG. **1** shown in an implantation site and holder instrument of FIG. **15**;

FIG. **36** is a top plan view of the holder instrument of FIG. **15** and implant of FIG. **1** shown in an implantation site after the expander driver instrument of FIG. **17** has been used to pack the space in the implant left unoccupied by the removal of the expander driver instrument with bone growth promoting materials;

FIG. **37** is a top plan view showing the withdrawal of the holder instrument of FIG. **15** from the implant of FIG. **1** shown in an implantation space; and

FIG. **38** is a top plan view of a lower vertebral body and two implants of FIG. **1** implanted in a final position into an implantation site formed posteriorly across a disc space.

FIG. **39** is a cross-sectional side view of the implantation site formed across the disc space and two adjacent vertebral bodies from the anterior approach to the spine with the implant of FIG. **11** installed into the implantation site in the final deployed position with upper and lower surfaces in angular orientation to one another and bone screws installed to anchor the implant; and

FIG. **40** is a cross-sectional side view of the implantation site formed across the disc space and two adjacent vertebral bodies with the implant of FIG. **11** installed into the implantation space in the final deployed position with upper and lower surfaces in parallel orientation to one another and bone screws installed to anchor the implant.

FIG. **41** is an exploded perspective view of an embodiment of an anterior lumbar expandable arcuate interbody spinal fusion implant for use with the instrumentation and method of the present invention;

FIG. **42** is a top plan view of the implant of FIG. **41**;

FIG. **43** is a trailing end view of the implant of FIG. **41**;

FIG. **44** is a side elevation view of the implant of FIG. **41**;

FIG. **45** is a leading end view of the implant with the end cap of FIG. **41** attached thereto;

FIG. **46** is a cross-sectional view along line **46**—**46** of FIG. **42**;

FIG. **47** is a cross-sectional view along line **47**—**47** of FIG. **45**;

FIG. **48** is a side elevation view of an end cap for use with the implant of FIG. **41**;

FIG. **49** is a perspective view of the implant of FIG. **41** and an implant inserter with a head configured to cooperatively engage the trailing end of the implant, the head having two projections for engagement with complementary receiving holes on the trailing end of the implant;

FIG. **50** is a side view of the implant of FIG. **41** being inserted by the implant inserter of FIG. **49** from a generally anterior approach to the spine into an implantation site formed across the height of a disc space and between two adjacent vertebral bodies of the spine shown in partial cross-section;

FIG. **51** is a cross-sectional view of the implant of FIG. **41** inserted in the implantation site of FIG. **50**;

FIG. **52** is a trailing end perspective view of the implant of FIG. **41** with an expander driver instrument being positioned to engage the expander, the expander driver instrument having an end configured to cooperatively engage the expander;

FIG. **53** is a cross-sectional view of the implant of FIG. **41** inserted from an anterior approach to the spine in an implantation site of FIG. **50** and expanded by the expander driver instrument of FIG. **52** to place the adjacent vertebral bodies in lordosis;

FIG. **54** is a trailing end view of the anterior aspect of two adjacent vertebral bodies and two implants of FIG. **41** implanted therebetween in a final position;

FIG. **55** is a leading end perspective view of an implant, an implant holder with a head configured to cooperatively engage the trailing end of the implant, the head having two projections for engagement with complementary receiving holes on the trailing end of the implant, the implant holder being hollow and adapted to accommodate the passage of an expander driver therethrough, the expander driver being shown in a retracted position within the implant holder;

FIG. **56** is a trailing end perspective view of the implant, and a leading end perspective view of the implant holder and expander driver of FIG. **55**, the expander driver being shown in a retracted position within the implant holder;

FIG. **57** is a trailing end perspective view of the implant, and a leading end perspective view of the implant inserter and expander driver of FIG. **55**, the expander driver being shown in a partially extended state;

FIG. **58** is a side view of the implant of FIG. **55** being inserted by the implant inserter of FIG. **55** from a generally posterior approach to the spine into an implantation site formed across the height of a disc space and between two adjacent vertebral bodies of the spine shown in partial cross-section;

FIG. **59** is a cross-sectional view of the implant of FIG. **55** inserted in the implantation site of FIG. **58**;

FIG. **60** is a cross-sectional view of the implant of FIG. **55** inserted from a posterior approach to the spine in the implantation site of FIG. **58** and expanded by the expander driver instrument of FIG. **55** shown in a fully extended state to place the adjacent vertebral bodies in lordosis;

FIG. **61** is a trailing end perspective view of another embodiment of an implant for use with the instrumentation and method of the present invention and the expander driver of FIG. **55**;

FIG. **62** is a side view of another embodiment of an implant being inserted by the implant holder of FIG. **49** from a generally anterior approach to the spine into an implantation site formed across the height of a disc space and two adjacent vertebral bodies of the spine shown in partial cross-section;

FIG. **63** is a cross-sectional view of the implant of FIG. **62** expanded from an anterior approach to the spine by an expander driver instrument having an extended shaft configured to engage more than one expander to place the adjacent vertebral bodies in lordosis;

FIG. **64** is a cross-sectional side view of the implantation site formed across the space between two adjacent vertebral bodies and the implant of FIG. **62** installed into the implantation space and anchored to the spine with bone screws;

FIG. **65** is a trailing end view of the anterior aspect of two adjacent vertebral bodies and the implant of FIG. **62** implanted therebetween in an expanded position as well as another embodiment of an implant designed to be used as a side-by-side pair;

FIG. **66** is a top plan view of the implants of FIG. **65** inserted at least in part within the lower vertebral body of an implantation site formed anteriorly across a disc space with the vertebral body shown in partial cross-section, the implants having an expander at each of the leading and trailing ends of each implant;

FIG. **67** is a perspective view of another embodiment of an implant inserter of the present invention having upper and lower projections and a pair of side extensions with flanges thereon to cooperatively engage complementary receiving holes and slots, respectively of a trailing end of a generally cylindrical implant adapted for insertion from the posterior aspect; and

FIG. **68** is an exploded perspective view of another embodiment of a spinal fusion implant for use with the instrumentation and method of the present invention.

DETAILED DESCRIPTION OF THE DRAWINGS

Reference will now be made in detail to the present preferred embodiments (exemplary embodiments) of the invention, examples of which are illustrated in the accompanying drawings.

The instrumentation and method of the present invention may be used for a posterior, anterior, lateral, or posterolateral approach to the spine. The present invention in one preferred embodiment is an integrated set of instruments allowing for the performance of a method for inserting expandable non-arcuate impacted interbody spinal fusion implants, from an approach posterior to the vertebral transverse processes, to either side of the spinal midline and preferably in pairs, where the implants are adapted to be capable of increasing in height anteriorly (at their leading ends) from a first collapsed state, to a second expanded state for the purposes of inducing interspace distraction and/or of increasing spinal lordosis at that interspace. In other preferred embodiments, the instruments and methods of the present invention are used to insert expandable non-arcuate impacted interbody spinal fusion implants from an anterior approach to the spine, where the implants are adapted to be capable of increasing in height anteriorly, and if desired, both anteriorly and posteriorly including anteriorly more than posteriorly (at their leading ends). With little modification, the taught methods and instruments can also be utilized to insert such implants in a lateral orientation.

FIGS. **1**–**14** show preferred embodiments of an expandable interbody spinal fusion implant such as those described by Michelson in International Application No. PCT/US01/03657, entitled "Expandable Impacted Interbody Spinal Fusion Implant," the disclosure of which is incorporated by reference herein, and instruments for use fit therewith in accordance with the present invention. To better understand the structure and interrelationship of the instruments and the

associated methods for their use, the structure and associated characteristics for one embodiment of an implant adapted to be inserted via these instruments and methods will be described first.

As shown in FIGS. **1**–**7**, a preferred embodiment of an expandable non-arcuate impacted interbody spinal fusion implant for use with the instruments and method of the present invention is generally referred to by the number **100**. Implant **100** preferably has a leading end **102**, a trailing end **104**, an upper member **106**, and a lower member **108**. Upper and lower members **106**, **108** are each preferably non-arcuate and adapted for placement toward and at least in part within the upper and lower of two adjacent vertebral bodies, respectively.

As used herein the term "non-arcuate" is intended to describe the upper and lower surfaces of the implant as having (1) no curvature, as in a planar surface, (2) slight or mild curvature from the leading end to the trailing end of the implant, and/or (3) slight or mild curvature across the implant width. Slight or mild curvature does not include the curvature associated with the upper and lower surfaces of implants for insertion into a disc space having a circular cross section formed across a spinal disc and into the adjacent vertebral bodies. While the upper and lower surfaces of this one preferred embodiment of an expandable non-arcuate implant may have some curvature, in comparison to an implant having a circular cross section, the curvature is minimal. For implants having a circular cross section such as threaded implants the curvature of the upper and lower surfaces contacting the adjacent vertebral bodies is a radius of half the width of the implant. If there is a curvature to the upper and lower surfaces of the non-arcuate implant described above, the curvature is that of a circle much greater than the width of the implant; thus, it has a slight curvature that may correspond to an anatomical curvature of a disc or the surface of the vertebral endplate. Conversely, the surface may have surface protrusions that are in part arcuate but the implant itself still being generally non-arcuate.

Each of upper and lower members **106**, **108** preferably have at least one opening **110** in communication with one another for permitting for the growth of bone from adjacent vertebral body to adjacent vertebral body through implant **100**.

On an exterior surface **112** of each of opposed upper and lower members **106**, **108** is at least one bone-engaging projection **114** adapted for linear insertion, which in one preferred embodiment is a ratchet. Alternatively, bone engaging projection **114** can be a surface roughening, knurling, spline, or any other configuration suitable for the intended purpose of resisting expulsion of the implant from the disc space after implantation.

Upper and lower members **106**, **108** are moveable relative to one another and have a first position that allows for a collapsed implant height and a second position that allows for an increased height. In the first position, upper and lower members **106**, **108** may be parallel to one another, but also can be angled if desired. Upper and lower members **106**, **108** are preferably articulated at an articulation point proximate trailing end **104** of implant **100**. Upper and lower members **106**, **108** are articulated to one another so one of the respective ends of upper and lower members **106**, **108** remain articulated while the other of the respective ends of upper and lower members **106**, **108** are free to move away from one another

As shown in FIG. **1**, by way of example, upper and lower members **106**, **108** preferably have a cooperating rotational articulation or pivot point **116** between upper and lower members **106**, **108**. The cooperating rotational articulation **116** preferably is proximate one of the proximal end and the distal end of upper and lower members **106**, **108** at an end opposite to an expanding mechanism or expander **120**.

Each of upper and lower members **106**, **108** of the implant of FIG. **1** preferably has a track **122**, **124** within which expander **120** rotates. As best shown in FIGS. **1** and **7** track **122**, **124** is configured to permit expander **120** to rotate therein and then to move from side to side within track **122**, **124**.

A slot **126** on implant **100** is adapted to cooperatively engage and may lockably attach to an implant holder **500** (described below) and to thereafter, if so desired by the surgeon, receive a cap that snaps into slot **126**.

FIGS. **8**–**10** show various views of an expander element for use with expandable spinal fusion implants adapted for use with the instruments and methods of the present invention.

While a specialized form of a blocker **128**, such as shown in FIGS. **1**B and **1**C, is described in detail below with reference to expander **120**, blocker **128** need not be in contact with upper and lower members **106**, **108** when implant **100** is initially inserted into the implantation space. Blocker **128** may be a block or any type of spacer that is inserted between the articulated upper and lower members **106**, **108** after implant **100** is positioned so as to hold portions of the upper and lower members **106**, **108** spaced apart at the optimal height and angulation relative to one another. That is the implant may be expanded with an expander driver **600**, described in more detail below, and then the expanded portions held apart in the second position by a third body blocker placed therebetween. Further, a physician may be able to select from a series of blockers having different heights usable with the same implant.

Blocker **128** that is preferably in the form of expander **120** is located proximate at least one of the ends of implant upper and lower members **106**, **108** and holds at least a portion of upper and lower members **106**, **108** apart so as to maintain the increased height of implant **100** and resist the collapse of implant **100** to the collapsed implant height. Expander **120** in the present embodiment increases the implant height as measured in a plane passing through the mid-longitudinal axis of implant **100** and upper and lower members **106**, **108** during positioning of expander **120** and as may be desirable is capable of selectively increasing the height of the implant only.

Expander **120** in the present embodiment is adapted to rotate in a single direction approximately 90 degrees to move from an initial (first) insertion position I, as best shown in FIGS. **1** and **7**, to a final (second) deployed or expanded position F, as best shown in FIG. **34**, to increase the maximum height H of implant **100**.

Expander **120** has an opening **130** adapted to cooperatively engage expander driver **600** used to rotate expander **120** to increase height H of implant **100**. Expander driver **600** preferably rotates about an axis parallel to the longitudinal axis L of implant **100** to rotate expander **120** to increase height H of implant **100**. Opening **130** also may be used as a passageway to pass fusion-promoting materials through expander **120** and into implant **100**.

In rotating the expander, the longer dimension of the expander is substituted for the lesser dimension of the expander thus correspondingly increasing the maximum height of the implant from the first to the second position.

As best shown in FIG. **10**, the schematic representation of a geometric configuration of a cross-section of an expander

120 in accordance with one embodiment of the present invention, includes: a first dimension X corresponding to the height of expander **120** when implant **100** is initially inserted into the spine and to the width of expander **120** when expander **120** is rotated to increase height H of implant **100**; and a second dimension Y corresponding to the width of expander **120** when implant **100** is initially inserted into the spine and to the height of expander **120** when expander **120** is rotated to increase height H of implant **100**. Second dimension Y is greater than first dimension X. Preferably, expander **120** offers a surgeon multiple sensory advantages including: the tactile feel of expander **120** going over center and locking into place; the visual of the handle of a tool rotating expander **120** such that the tool handle goes from perpendicular to parallel, the reverse, or other, to the disc space into place; and auditory from the sound of expander **120** snapping into place.

As shown in FIGS. **1** and **7**, in one preferred embodiment of the present invention for posterior insertion, expander **120** is located proximate the leading end **102** of upper and lower members **106**, **108**. It is appreciated that depending on the intended results, the expander also may be located at trailing end **104** of upper and lower members **106**, **108** or anywhere else within the implant. Moreover, multiple expanders may be used in contact with upper and lower members **106**,**108** at any location within implant **100**.

FIGS. **11**–**14** show various views of other embodiments of expandable interbody spinal fusion implants adapted for use with the instrumentation and methods of the present invention. As shown in FIGS. **11** and **12**, implants **200** and **300** are similar to implant **100** except that they are designed for insertion from an anterior to posterior direction and to fill more than half the width of the disc space. Implants similar to **200** and **300** may have a pivot at the leading end and an expander or expanders at the trailing end as with the earlier described posterior insertion implant, such that the implants will get taller at their trailing ends instead of their leading ends to restore lordosis.

As actually shown in FIG. **11**, implant **200** has two expanders **220** for moving at least a portion of the upper and lower members away from one another to increase the height of implant **200**. All of the features described herein for the single expander **120** of implant **100** of FIGS. **1**–**7** may also be applicable to both expanders **220** of implant **200**. Additionally, second expander **220** may be located proximate an end of implant **200** opposite other expander **220**, thereby providing implant **200** the capability of being expanded at both ends **202**, **204** of implant **200**. The increased height of implant **200** resulting from moving two expanders **220** may be constant or varied along the length of implant **200** according to the desired configuration of implant **200**. Implant **200** may also be embodied to have a single expander at its trailing end and a pivot point at its leading end.

FIG. **12** shows another preferred embodiment of an expandable non-arcuate interbody spinal fusion implant for use from the anterior approach with the instrumentation and methods of the present invention generally referred to by the number **300**. In implant **300** two sets of expanders **320** are used, each set being located on one side of the mid-longitudinal axis of implant **300**. Depending upon the type of articulation used, expanders **320** may be rotated to confer a transverse angulation as well as longitudinal angulation to upper and lower members **306**, **308** in situations where such angulation is desired. All four expanders **320** may be used to expand upper and lower members **306**, **308** by the same or different amount relative to one another. This can be done to permit the surgeon to expand the leading and trailing ends or sides by varying degrees.

As shown in FIG. **13**, a cap **334** having an exterior surface and an interior surface may be used to close trailing end **302** of implant **300**. As may be appreciated by those skilled in the art, cap **334** may be adapted for attachment to implant **300** in a number of ways. For example, the interior surface of cap **334** may have spaced slots about its circumference to facilitate a snap fit between cap **334** and the implant **300**, or the rim of cap **334** may be threaded for rotational engagement with trailing end **302** of implant **300**. Further, cap **334** may be solid or perforate and made of a surgical quality plastic that may be resorbable or of any other suitable material. Cap **334** may also be adapted to prevent over-expansion of implant **300**. Examples of caps for preventing over-expansion of implants are taught by Michelson in U.S. Provisional Application No. 60/274,869, the disclosure of which is hereby incorporated by reference herein.

FIG. **14** shows another preferred embodiment of an implant for use from a posterior approach with the instrumentation and methods of the present invention generally referred to by the number **400**. Implant **400** has an expander **420** at its leading end **402**. Leading end **402** is shaped to generally conform to the anatomical configuration of the anterior aspect of the vertebral body to prevent the anterior lateral aspect of the implant from protruding from the spine. Implant **400** with little modification is also useful for bilateral anterior hemi (half width) implant insertion such as might be desirable for laproscopic insertion.

Though described in relation to posterior and anterior approaches, the push-in implant of the present invention also may be used for insertion from the translateral aspect of the spine as disclosed by Michelson in U.S. Pat. No. 5,860,973, which is incorporated herein by reference. In which case, the implants would expand at least anteriorly to increase the disc space height and/or restore lordosis.

FIGS. **15**–**18** show various views of instruments adapted for inserting and expanding spinal fusion implants such as those previously described. Unless otherwise noted, the instruments and their use will be described in relation to implant **100** and other expandable implants.

FIGS. **15** and **16** show a preferred embodiment of an implant holder **500** for inserting implant **100** into a disc space. Implant holder **500** has a shaft **502** and an outer sleeve **504**. Shaft **502** has a distal end **506**, a proximal end **508**, a reduced portion **510** extending towards distal end **506**, an intermediate reduced portion **511**, and an enlarged portion **512** between intermediate reduced portion **511** and proximal end **508**. The transition from enlarged portion **512** and intermediate reduced portion **511** preferably forms a shoulder adapted to abut proximal end **524** of outer sleeve **504**. Shaft **502** is preferably hollow and is adapted to permit the passage of other instruments therethrough as described below. Reduced portion **510** has a shoulder **514** at distal end **506** sized and shaped to cooperatively engage with the distal end of outer sleeve **504** to lock implant holder **500** to implant **100** in order to hold and manipulate the implant during insertion into the disc space. As used herein, the term "lock" is intended to describe the securing of an implant to the implant holder such that the implant holder may rotate, push, pull, or otherwise orient the implant into the implantation space without the inadvertent disassociation of the implant from the implant holder. Extending from intermediate reduced portion **511** is a peg **516** proximate the leading edge of enlarged portion **512** for insertion into a slot **540** of outer sleeve **504**. Proximal end **508** of enlarged portion **512** has an

increased diameter adapted to receive enlarged portion **612** of an expander driver **600**. Proximal end **508** has a cutout **518** for receiving a peg **622**. Cutout **518** has a slot **520** for receiving peg **622** of expander driver **600** to prevent expander driver **600** from rotating relative to implant holder **500**.

Outer sleeve **504** has a distal end **522** and proximal end **524**. Distal end **522** to has upper and lower extensions **526**, **528**, and side extensions **530** adapted to cooperatively engage trailing end **104** of implant **100**. Side extensions **530** each have a flange **532** to cooperatively engage slot **126** of implant **100** and a stop **534** for limiting further advancement of implant holder **500** into trailing end **104** of implant **100**.

As shown in FIGS. **15**, **19**, and **20**, side extensions **530** each have an interior surface **536** with a ramp portion **538**. Ramp portion **538** interacts with the nose of shoulder **514** of shaft **502**, which is preferably beveled to facilitate spreading apart side extensions **530** and engaging flanges **532** with slots **126** of implant **100**.

FIGS. **17** and **18** show a preferred embodiment of expander driver **600** for engaging and rotating expander **120**. Expander driver **600** has a shaft **602** with a distal end **604**, a proximal end **606**, a reduced portion **608**, an implant holder engagement portion **610**, and an enlarged portion **612**. Shaft **602** has a generally circular cross section and is adapted to preferably coaxially engage the interior of shaft **502** of implant holder **500** to maintain vertical alignment between expander driver **600** and implant holder **500**. Distal end **604** has a tip **614** adapted to cooperatively engage opening **130** of expander **120**. In a preferred embodiment, tip **614** is hex-shaped, but may be of any shape suitable to engage expander **120**.

Implant holder engagement portion **610** has a first, distal detent **616** and a second, proximal detent **618** for lockable engagement with implant holder **500**, described in more detail below with reference to FIGS. **23**, **24**, **28**, and **29**. Enlarged portion **612** is preferably sized and shaped to fit into and rotate within proximal end **508** of implant holder **500**. Enlarged portion **612** has a shoulder **620** and a peg **622** for cooperating with cutout **518** and slot **520** of implant holder **500** to limit the rotation of expander driver **600** while engaged with implant holder **500**. Proximal end **606** has a T-shaped handle **624** for manual rotation of expander driver **600**. Handle **624** may be removable such as a quick release handle. In instances where two expander drivers **600** are to be used simultaneously, it may be preferable to have each of two separate expander drivers **600** use an "L" shaped handle so that both implants may be expanded simultaneously without the handles hitting each other. Other handles, such as handles oriented in different planes, could also be used, and any combination of handles suitable for the purpose as would be readily apparent to one of ordinary skill in the art is within the scope of the present inventive teaching.

FIGS. **19**–**38** show various steps of a preferred method for inserting implant **100** and using associated instrumentation disclosed herein from a posterior approach to the spine.

The surgeon first identifies the correct disc space to be operated upon by direct inspection or by radiographic means such as a radiopaque marker and an x-ray or image intensifier. The disc is then surgically accessed from a position posterior to the transverse processes of the vertebrae to be fused. Sufficient laminar bone is removed to allow sufficient access to the posterior aspect of the disc space. The surgeon may then remove disc material that is at least sufficient to create the discal portion of an implant receiving space. Alternatively, the surgeon may first insert a guard and then with the use of the guard remove at least sufficient disc material to create the discal portion of an implant receiving space. With the dural sac safely retracted and protected to the side opposite the insertion, and with the proximate nerve roots protected as necessary, the surgeon may elect to insert a guard such as guard **700** set forth in Applicant's copending U.S. patent application Ser. No. 60/272,381 entitled "Dynamic Lordotic Guard with Movable Extensions for Creating an Implantation Space Posteriorly in the Lumbar Spine and Method for use Thereof", incorporated by reference herein. Guard **700** has a pivotable extended outer sleeve to protect adjacent delicate neurological structures and induce lordosis to the adjacent vertebral bodies, as shown in FIG. **26**. Although guard **700** is preferred for its use in restoring lordosis to adjacent vertebral bodies, it will be appreciated by those of ordinary skill in the art that other guards may be used to protect the dural sac in instances where it is desired to use a guard to protect the dural sac.

The disc space is then prepared by a bone removal instrument to receive a correctly sized implant **100**. Preferred instruments and methods of preparing the disc space are disclosed and taught by Michelson in U.S. patent application Ser. No. 09/972,560 entitled "Spinal Interspace Shaper"; U.S. Pat. No. 6,083,228 entitled "Device and Method for Preparing a Space Between Adjacent Vertebrae to Receive an Insert"; U.S. Pat. No. 6,224,607 entitled "Instrument And Method For Creating An Intervertebral Space For Receiving An Implant"; and WIPO publication WO 99/63891 entitled "Device for Preparing a Space Between Adjacent Vertebrae to Receive an Insert," the disclosures of which are all herein incorporated by reference. Where it is desirable to leave guard **700** for protecting adjacent delicate neurological structures in place after the preparation of the disc space, the described operation can be performed through guard **700** and be removed at its completion. It is generally preferred that the procedure be performed on both sides of the spinal midline and that two implants **100**, each having a width less than half the width of the disc space be inserted from a posterior to anterior approach either generally parallel, or alternatively from a generally posterior to anterior approach in a "toed-in" configuration.

Preferably prior to insertion, implant **100** may be loaded with fusion promoting materials including any of, or any combination of, bone in any of its forms, materials derived from bone, bone morphogenetic proteins, mineralizing proteins, genetic materials coding for the production of bone or any substance capable of inducing the formation of bone or useful for achieving fusion for the intended purpose. In order to best accommodate the presence of fusion promoting materials, implant **100** preferably has a hollow **118**, as shown in FIG. **6**, between the ends that is unobstructed by an expander **120** so as to allow for the unimpeded loading of the interior of the implant. Further, this preferred configuration of implant **100** makes available all of the volume of the hollow to contain fusion-promoting materials and so as to permit for the growth of bone directly through the hollow unobstructed by any expansion mechanism, to adjacent vertebral bodies. The method and instrument of the present invention may also be useful for expandable implants that are not so unobstructed. The fusion promoting materials may be loaded or preferably compressively loaded into implant **100** by use of an instrument such as, for example, a tamp, press, or piston at any time during the procedure as desired by the surgeon.

As shown in FIGS. **19** and **20**, the distal end of implant holder **500** is inserted into trailing end **104** of implant **100** such that flanges **532** of outer sleeve **504** are positioned for

engagement with slots **126** of implant **100**. In FIG. **20**, shaft **502** is moved to an extended position within outer sleeve **504** by linearly advancing reduced portion **510** of shaft **502** through outer sleeve **504**. This allows shoulder **514** to contact ramp portion **538** of each side extension **530** and force apart each side extension **530** until flanges **532** engage slots **126** of implant **100** to engage outer sleeve **504** to implant **100**. It will be appreciated that instead of forcing side extensions **530** away from one another, the implant holder may be adapted so that the side extensions may be forced toward one another to lock the implant to the implant holder. Such an embodiment is described below with relation to FIG. **67**.

In FIG. **21**, shaft **502** is rotated relative to outer sleeve **504** such that peg **516** moves to a locked position within L-shaped slot **540** of outer sleeve **504**, thereby locking shaft **502** into an extended position within outer sleeve **504**. With implant holder **500** lockably engaged to implant **100**, the surgeon can manipulate implant **100** (i.e., push or pull) without the danger of implant **100** and implant holder **500** being disconnected. When implant holder **500** is connected to trailing end **104** of implant **100**, the material within implant **100** may be further compressed and/or extruded into and through the opening(s) in the vertebrae engaging surfaces of implant **100** by, for example, using an instrument such as expander driver **600** to push bone growth promoting materials through implant holder **500**.

As shown in FIGS. **22**–**24**, distal end **604** of expander driver **600** is introduced into proximal end **508** of shaft **502** and advanced through implant holder **500** into implant **100**. The leading end of tip **614** of expander driver **600** is shaped to facilitate the instrument being advanced by a rotational movement through the implant packing material in implant **100** until it reaches and is advanced into engagement with expander **120**. The depth of penetration of expander driver **600** into and through expander **120** is stopped out by the larger cross sectional dimensions of implant holder engagement portion **610** and enlarged portion **612** of expander driver **600**. Expander driver **600** is then locked to implant holder **500** in a first locked position to prevent any further rotation of expander driver **600** relative to implant holder **500**. This is accomplished by positioning peg **622** of expander driver **600** into receiving slot **520** at proximal end **508** of implant holder **500**, and by positioning first and second spring locks **546**, **548** of interior surface **542** of shaft **502** within first and second detents **616**, **618** of implant holder engagement portion **610**. Locking expander driver **600** to implant holder **500** in the first locked position allows handle **624** of expander driver **600** to control the manipulation of the implant itself and allows for the driving forward of implant holder **500** and implant **100** into the disc space without movement of the expander so that the implant remains in the collapsed position during insertion.

In FIGS. **25** and **26**, implant **100** is advanced into the prepared recipient disc space by a pushing movement, an impaction force, or a combination thereof through guard **700**. In a preferred method for preparing a recipient site, the vertebral endplates are worked upon and at least the outermost cell layers of bone are removed from the adjacent vertebral bodies to allow for fusion. But bone of the endplate region may be preserved as would otherwise be desirable to the surgeon. Guard **700** preferably has a shaft **702** adapted to permit the insertion therethrough of instruments used in the preparation and implantation of spinal implants, a distal end **704**, and a proximal end **706**. Proximal end **706** has upper and lower members **708**, **710** adapted for movable engagement with one another. Distal end **704** has upper and lower disc penetrating extensions **712**, **714** and a pivot point **716** configured so that upon collapsing proximal end **706**, upper and lower disc penetrating extensions **712**, **714** spread apart and induce lordosis to the adjacent vertebral bodies when inserted into the disc space. Other guards serving any of the same purposes may alternatively be employed. Implant **100** is inserted to the appropriate depth which may by preference be such that trailing end **104** of implant **100** does not protrude beyond the posterior aspects of the adjacent vertebral bodies, and such that no substantial portion of implant **100** protrudes from the outer perimeter of the adjacent vertebral bodies between which implant **100** is installed. It may be desirable to "countersink" or "recess" implant trailing end **104** inside the posterior perimeter of the adjacent vertebral bodies. Implant **100** may be inserted so that it is between two adjacent vertebral bodies or at least in part within the adjacent vertebral bodies. Although use of guard **700** is preferred, the invention is not so limited, such that the implant may be inserted directly into the disc space as shown in FIG. **27**A.

As shown in FIGS. **27**A and **27**B, it is appreciated that the adjacent vertebral bodies need not be in an angular relationship to each other prior to insertion of implant **100**. For example, implant **100** may be inserted into the disc space in a parallel orientation with the vertebral bodies in a parallel relationship to each other as shown in FIGS. **27**A and **27**B. The advancement of implant **100** would then continue into the disc space in a parallel orientation P until leading end **102** of implant **100** encounters upper and lower shoulders S.

At this point the surgeon has a number of options for completing the procedure, two of which are preferred and described below.

One option is to complete the procedure on one of either the left or right side of the spine before repeating the procedure on the other side of the spine. Another option is to implant two implants in an unexpanded state and then expand each one, preferably simultaneously. Though both methods will be described, attention will first be directed to the method by which the implantation and expansion are performed on a first side prior to implant implantation on the second or other side.

In FIGS. **28** and **29**, expander driver **600** is partially retracted from the first locked position to a second locked position such that second spring lock **548** of implant holder **500** engages first detent **616** of expander driver **600**. Expander driver **600** in this position is rotatable relative to implant holder **500**, so that peg **622** of expander driver **600** exits slot **520** and is free to rotate within cutout portion **518** of implant holder **500**. Preferably, cutout portion **518** is shaped and sized such that after exiting slot **520**, the travel of peg **622** is limited to approximately 90 degrees in a clock-wise direction from the top of slot **520**. This configuration of cutout portion **518** facilitates a properly guided rotation of expander **120**, which is configured for clock-wise rotation only when expanding the implant.

As shown in FIGS. **30**–**34**, after implant **100** is properly seated in the disc space, expander driver **600** is rotated to move expander **120** so that at least leading end **102** of implant **100** is expanded so as to increase the maximum implant height which is proximate leading end **102**. One purpose of expanding implant **100** is to place the adjacent vertebral bodies in angulation to another, or in lordosis in this example. During rotation of expander **120**, upper and lower members **106**, **108** move from parallel orientation P, as shown in FIG. **27**B where implant **100** is in a first position, to an angled orientation A, as shown in FIG. **31** where implant **100** is in a second position.

As shown in FIGS. **10**, **33**, and **34**, expander **120** in one embodiment of the present embodiment has a cross-section with side surfaces **136** intersecting upper and lower surfaces **138**, **140** at two junctions which may be diametrically opposed corners **142** and two diametrically opposed arcs **144**. Arcs **144** are preferably each of the same radius and a modified hypotenuse MH between opposed arcs **144** generally approximates the distance between upper and lower surfaces **138**, **140** such that, when expander **120** is rotated from an initial insertion position toward a final deployed position, no substantial over-distraction occurs between adjacent vertebral bodies. By "without substantial over-distraction" what is meant is that the modified hypotenuse MH length is closer to the expander dimension Y than to the unmodified hypotenuse UH; and is selected to allow the implant to preferably operate in the range of elastic deformation of the tissues about the operated disc space. It is appreciated that the expander also may move upper and lower members **106**, **108** from a first height at each end to a second and greater height at each end. For example, expander **120** may be used to expand an implant having an angled orientation upon insertion to either a parallel or greater angled orientation upon expansion, or expand an implant having a parallel orientation upon insertion to an expanded parallel orientation upon expansion.

A given implant may be able to receive an expander selected by the surgeon at the time of surgery from a graduated series of sizes of expanders so as to allow the surgeon to select the further distraction and/or maximum height of the implant.

When said methods and instrumentation are used to install such implants posteriorly, the technique may further include the application of scar tissue inhibiting substances posterior to the implant trailing end and at the floor of the spinal canal.

As shown in FIG. **35**, after implant **100** is positioned in an expanded state, expander driver **600** is removed from implant driver **500**. During this portion of the surgical procedure, proximal end **508** of implant holder **500** will generally be facing upward as the patient typically will be face down on the operating table. Proximal end **508** of implant holder **500** is preferably funnel-shaped or otherwise shaped to receive an implant packing material M, for example only, morselized bone graft, bone paste, gels or putties of bone with or without minerals, or any other fusion promoting substance or combination thereof. Shaft **602** of expander driver **600** occupies a volume along the mid-longitudinal axis of implant **100** that extends substantially the length of the graft holding portion of implant **100** from and through trailing end **104** of implant **100**. After implant **100** is expanded, a cleft C in the packed graft that is generally wedged shape and greater at the leading end than at the distal end is formed through and to each side of the expander driver track.

As shown in FIG. **36**, bone growth promoting materials are pushed through implant holder **500** by use of expander driver **600** or another instrument such as a piston or impactor. Cleft C and the track may then be filled with fusion promoting materials from leading end **102** to trailing end **104** of implant **100**. When desired, fusion promoting materials or graft may be compressively loaded into implant **100** so as to urge it towards the vertebral bodies. Further loading may be accomplished with or without implant holder **500** attached. Shaft **502** of the implant holder **500** is then rotated relative to outer sleeve **504** to move peg **516** into an unlocked position in L-shaped slot **540**. Shaft **502** can then be partially retracted from outer sleeve **504** moving shoulder **514** from distal end **522** of outer sleeve **504** and allowing side extensions **530** to collapse inward so that implant holder **500** can be separated from implant **100**.

As shown in FIG. **37**, implant holder **500** is detached from implant **100** and removed. At the surgeon's discretion, a cap may be installed to close off at least part of the implant's trailing end to prevent bone from growing into the spinal canal, or to limit adhesions of the neurological structures at the canal floor, or to otherwise protect the neurological structures. Additionally, scar tissue-inhibiting materials may be applied to the disc space and/or implant. The method includes the use of various materials including membranes and gels which may be suitable for this purpose. These materials may be used at any time after the implant(s) are inserted. One of the purposes for a cap includes restricting the passage of fusion-promoting materials so that they remain loaded within the implant. Another purpose for a cap may be to add structural support to the implant.

Having completed the procedure on a first side, the procedure is then repeated as already described on the opposite side of the same disc space leading to the implantation of two implants **100** in the same disc space as shown in FIG. **38**.

In summary, a preferred method of the present invention from the posterior approach to the spine includes: identifying the correct disc space to be fused; retracting and protecting the dural sac; performing at least a partial laminectomy sufficient for access to the disc space; performing at least a partial discectomy, which more preferably provides sufficient space to receive the depth of the implant; inserting a guard into the disc space; preferably inducing lordosis to the adjacent vertebral bodies prior to drilling, but alternatively after by use of the implant; and inserting a bone removal device through the guard to a desired insertion depth to create an implantation space. The depth of insertion may be monitored by x-ray.

After creation of the implantation site, the method may be continued by loading the implant with bone growth promoting materials; assembling the implant, implant holder, and expander driver together so that the expander driver is in the first locked position relative to implant holder; inserting the implant into the implantation space; retracting the expander driver to the second locked position; rotating the expander driver to move the expander and expand the implant The procedure may be continued by removing the expander driver from the implant and the implant holder; inserting fusion promoting material into the implant holder; using the expander driver as a piston to move bone growth promoting material into the interior of the implant; removing the expander driver from the implant holder; unlocking the implant holder from the implant; and removing the implant holder from the implant.

Thereafter, an end cap may be attached and scar tissue-inhibiting materials may be applied to the implant as desired. It will be appreciated by those of ordinary skill in the art that the above method may be varied according to the preferences of the attending surgeon while still being within the broad scope of the present invention. For example, the use of a guard may be omitted or used for only a portion of the procedure. The method may be performed without distracting the disc space or inducing lordosis between the adjacent vertebral bodies. The preparation of the disc space may be made with known bone drills or bone removal devices such as the Device for Preparing a Space Between Adjacent Vertebrae to Receive an Insert taught by Michelson referenced above. The implant may be loaded with bone growth promoting material before and/or after implantation. If bone growth promoting material is to be loaded into the implant

after implantation, other instruments may be used in lieu of the expander driver to move the bone growth promoting material into the implant. Further steps may be included as needed, for example, when utilizing implants having bone screws and bone screw locks. In such instances, the surgeon may perform the steps of inserting a bone screw through the implant and into an adjacent vertebral body, and locking the bone screw with a bone screw lock. Additionally, further steps for correctly sizing the implant may be included such as using radiographs, CT scans, or MRIs to obtain a measurement of the disc space and thereafter treating the implant accordingly prior to insertion.

In an alternative method, both implants are placed into the disc space in a generally side-by-side configuration and aligned generally from a posterior aspect to an anterior aspect. Both implants may then be expanded simultaneously, or in close succession.

In this method, both implants may be inserted by implant holder **500** without expander driver **600** attached thereto. Instead, implant holder **500** may be adapted to have a handle to facilitate the insertion of implant **100**. Once inserted, both implants receive expander drivers **600** that engage each of expanders **120** within the implants, but preferably without the presence of implant holder **500** during the expansion step. Because of the small cross sectional dimension of expander driver shafts **608** and their distance apart, the dural sac may safely run between them. As previously mentioned, it may be preferable to have each expander driver **600** comprising an "L" shaped handle so that both implants may be expanded simultaneously without the handles hitting each other. Other handles such as handles oriented in different planes, could also be used, and any combination of handles suitable for the purpose as would be readily apparent to one of ordinary skill in the art is within the scope of the present inventive teaching.

While it is preferable to have implant holder **500** in place while expanding implant **100**, the invention is not so limited. Expander driver **600** may also expand implant **100** without implant holder **500**. If the implants are expanded without implant holder **500** in place, then graft can be packed into the expander driver track and expansion cleft in the graft by freehand or preferably by an instrument that can align and preferably engage the trailing end of the implant distally, which is hollow, and terminates proximally in an opening formed to facilitate receiving the graft. A piston, plunger, press, or other instrument could then be used to drive the graft through the loading instrument and into implant **100**.

In another alternative method, both implants may be implanted from an anterior approach to the spine. The surgeon first identifies the correct disc space to be operated upon by direct inspection or by radiographic means such as a radiopaque marker and an x-ray or image intensifier. The disc is then surgically accessed from a position anterior to the transverse processes of the vertebral bodies to be fused. Sufficient laminar bone is removed to allow sufficient access to the anterior aspect of the disc space while preserving the annulus fibrosis portion of the disc along at least both sides of the disc space.

The interspace so created is distracted and while not requisite, preferably to its optimal height, which height is determined by the known normal spatial relationships for that area the adjacent soft tissue structures. The interspace is then preferably measured for height, depth, and width. The width of the interspace may be determined in reference to the inferior portion of the vertebral endplate of the superior vertebrae, and this determines the selection of the appropriate width for a milling block or other protective guard if one is desired to be used. A preferred milling block is taught by Michelson in U.S. Pat. No. 6,159,214 entitled "Milling Instrumentation and Method for Preparing a Space Between Adjacent Vertebral Bodies," the disclosure of which is hereby incorporated by reference herein. The measured depth of the interspace, that is the distance between the front and back of vertebral body, will determine the selection of a distractor and milling means of slightly lesser depth. The height and depth of the interspace will determine the selection of the appropriate height and length of the distractor element, the shape of which is determined by both the need to either maintain or restore lordosis, as well as the shape of the implant which may or may not be wedged.

Next, the correct distractor element is selected, having either a known fixed length, or preferably is adjustable and its optimal fixed length adjusted using a calibration gauge, integral markings or similar means. The distractor apparatus is then attached to the milling block which has already been selected for the correct width.

The combined distractor apparatus and milling block assembly is then brought to the fusion site and the distractor element is introduced into the disc space. The distractor element may be introduced into the disc space turned on its side so as to facilitate introduction and then turned 90 degrees to distract the space or the distractor element may be introduced perpendicular to the plane of the disc space relying on its bullet-shaped leading edge portion to distract the vertebral bodies apart. The angular relationship of the two vertebral bodies adjacent that disc space will then be determined by the shape of the distractor element. It is appreciated that while not preferred, a distractor could be inserted into the disc space first, then the milling block assembly is brought into place relative to the spine thereafter.

The milling block is then secured to the anterior aspect of the spine preferably, by engaging each of the adjacent vertebral bodies. The width and depth of bone resection may then be easily confirmed visually prior to any actual bone resection. The distractor element and distractor apparatus are then removed from the disc space.

The surgeon may then remove disc material that is at least sufficient to create a portion of an implant receiving space.

Although a milling block is preferred for its use in restoring lordosis to adjacent vertebral bodies, it will be appreciated by those of ordinary skill in the art that other devices may be used to induce lordosis to the adjacent vertebral bodies in instances where it is desired to do so.

The disc space is then prepared by a bone removal instrument to receive a correctly sized implant. The proper dimensioned bone removal means, corresponding to the previously employed distractor element, is selected and using the receiving depth gauge, the bone removal means is adjusted for depth and locked. The bone removal means is secured to the milling port of the milling block, and the space is then milled to remove a portion of bone from the endplates adjacent to the disc space. The milling apparatus is removed and the prepared space may be irrigated and suctioned through the milling block, or alternatively the entire milling assembly including the milling block may first be removed and the prepared space then irrigated and suctioned.

The prepared space is distracted utilizing conventional means and the appropriate implant or implants are then inserted into the prepared space.

Preferably prior to insertion, the implant may be loaded with fusion promoting materials such as those described in relation to the method from the posterior approach to the

spine. The fusion promoting materials may be loaded or preferably compressively loaded into the implant by use of an instrument such as, for example, a tamp, press, or piston at any time during the procedure as desired by the surgeon.

Thereafter, the method may be continued by inserting the implant into the implantation space and moving the expander to expand the implant. Alternatively, if the implant is inserted laproscopically, the method may include assembling the implant, implant holder, and expander driver together so that the expander driver is in the first locked position relative to the implant holder; inserting the implant into the implantation space; retracting the expander driver to the second locked position; rotating the expander driver to move the expander and expand implant. The procedure may be continued by removing the expander driver from the implant and implant holder; inserting fusion promoting material into the implant holder; using the expander driver as a piston to move bone growth promoting material into the interior of the implant; removing the expander driver from the implant holder; unlocking the implant holder from the implant; and removing the implant holder from the implant.

As shown in FIGS. **39** and **40**, if implant **200** is used having expanders at its leading and trailing ends, either one or both expanders **220** may be used to expand implant **200** to create a desired angulation of the adjacent vertebral bodies. Additionally, bone screws **232** may be inserted into the adjacent vertebral bodies to better anchor implant **200** to the spine.

Thereafter, an end cap may be attached and scar tissue-inhibiting materials applied to the implant as desired though these are less of a consideration than in the spinal canal. The steps for the method from the anterior approach to the spine may be varied as already mentioned with regards to the method from the posterior approach to the spine.

FIGS. **41**–**68** show various views of embodiments of expandable arcuate interbody spinal fusion implants adapted for use with the instrumentation and methods of the present invention.

As used herein, the term "arcuate" is intended to describe the shape of an implant adapted to be inserted into a disc space between two adjacent vertebral bodies that each have a portion after preparation of the disc space that are arcs of the same circle. For example, for implants having a circular cross section such as threaded implants, the curvature of the upper and lower surfaces contacting the adjacent vertebral bodies is a radius of half the width of the implant.

As shown in FIGS. **41**–**48**, implant **800** is similar to implant **100** except that upper and lower members **806**, **808** are each preferably arcuate and adapted for placement toward and at least in part within the upper and lower of two adjacent vertebral bodies, respectively. Additionally, exterior surface **812** of each of opposed upper and lower members **806**, **808** has at least one bone-engaging projection **814** in the form of a thread. Pin receiving holes **826** on trailing end **804** of implant **800** are adapted to receive an implant holder (described below).

As shown in FIGS. **41** and **48**, a cap **834** may be used to close leading end **802** of implant **800**. As may be appreciated by those skilled in the art, cap **834** may be adapted for attachment to implant **800** in a number of ways. For example, the interior surface of cap **834** may have spaced slots **835** between flanges **837** about its circumference to facilitate a snap fit between cap **834** and the implant **800**, or the rim of cap **834** may be threaded for rotational engagement with leading end **802** of implant **800**. Further, cap **834** may be solid or perforate and made of a surgical quality plastic that may be resorbable or of any other suitable material.

FIGS. **49**–**54** show various steps of a preferred method for inserting implant **800** and using associated instrumentation disclosed herein from an anterior approach to the spine.

The surgeon first identifies the correct disc space to be operated upon by direct inspection or by radiographic means such as a radiopaque marker and an x-ray or image intensifier. The disc is then surgically accessed from a position anterior to the transverse processes of the vertebrae to be fused. The surgeon may then remove disc material that is at least sufficient to create a portion of an implant receiving space. Alternatively, the surgeon may first insert a guard such as guard **700** shown in FIG. **26**, but adapted for use with arcuate implants, and then with the use of the guard remove at least sufficient disc material to create the portion of an implant receiving space.

The disc space is then prepared by a bone removal instrument to receive a correctly sized implant **800**. Where it is desirable to leave the guard for protecting adjacent delicate neurological structures in place after the preparation of the disc space, the described operation can be performed through the guard and be removed at its completion. The depth of insertion may be monitored by x-ray.

After the disc space has been prepared, fusion promoting materials may be loaded or preferably compressively loaded into implant **800** by use of an instrument such as, for example, a tamp, press, or piston at any time during the procedure as desired by the surgeon.

As shown in FIG. **49**, a preferred embodiment of the working end of an implant holder **900** for holding implant **800** and for use in inserting implant **800** into the disc space has a shaft **902** and a distal end **904** with an enlarged head **906**. Head **906** has an implant engagement area **908** with projections **910**. Projections **910** may be formed as pins, pegs, or any other projection suitable for the intended purpose. Distal end **904** is configured to be inserted into trailing end **804** of implant **800** such that pins **910** are positioned for engagement with pin receiving holes **826** of implant **800**. Pins **910** hold upper and lower members **806**, **808** of implant **800** together during insertion thereof. A person of ordinary skill in the art will appreciate that other means of attaching implant holder **900** to implant **800** may be used and are within the broad scope of the present invention. Such means may include, for example only, flanges, screw threads, and magnetism.

As shown in FIGS. **50** and **51**, pins **910** are engaged with pin receiving holes **826** and implant **800** is inserted into the disc space in its unexpanded state. Pins **910** attach to implant **800** to preferably permit implant **800** to be rotated into the disc space. After implant **800** has been inserted into the disc space, implant holder **900** is removed from implant **800**.

As shown in FIG. **52**, the procedure may be continued by aligning expander driver **1000** with trailing end **804** of implant **800**. A preferred expander driver **1000** for engaging and rotating expander **820** has a shaft **1002** with a distal end **1004** having a tip **1006**. Tip **1006** has an expander engagement area **1008** adapted to cooperatively engage opening **830** of expander **820**. In a preferred embodiment, tip **1006** is hex-shaped, but may be of any shape suitable to engage expander **820**.

As shown in FIG. **53**, tip **1006** of expander driver **1000** is introduced into and advanced through trailing end **804** of implant **800**. The depth of penetration of expander driver **1000** into and through trailing end **804** is stopped out by the larger cross sectional dimension of shaft **1002**.

As shown in FIG. **54**, expander driver **1000** is rotated to move expander **820** from its initial position to its final position to expand implant **800**. During rotation of expander **820**, upper and lower members **806**, **808** move from parallel orientation P, as shown in FIG. **51** where implant **800** is in a first position, to an angled orientation A, as shown in FIG. **53** where implant **800** is in a second position. Implant **800** may be further packed with bone growth promoting materials to fill any spaces left behind by the withdrawal of expander driver **1000** from implant **800**. As shown in FIGS. **41** and **54**, tracks **822**, **824** are configured to permit expander **820** to rotate therein and then to move from side to side within track **822**, **824** as shown by arrows B to permit greater access to hollow interior **818**.

As best seen in FIG. **54**, for example, more than one implant **800** may be placed in a side-by-side configuration to beneficially occupy more disc space than would otherwise be possible with a single arcuate interbody spinal fusion implant.

Thereafter, at the surgeon's discretion, a cap may be installed to close off at least part of the implant's trailing end to prevent bone from growing into the spinal canal, or to limit adhesions of the neurological structures at the canal floor, or to otherwise protect the neurological structures. One of the purposes for a cap includes restricting the passage of fusion-promoting materials so that they remain loaded within the implant. Another purpose for a cap may be to add structural support to the implant.

FIGS. **55**–**60** show another embodiment of an expandable arcuate interbody spinal fusion implant adapted for use from the posterior approach with the instrumentation and methods of the present invention generally referred to by the number **1100**. Implant **1100** is similar to implant **800** except that it is designed for insertion into the implantation site from a posterior approach to the spine. Implant **1100** preferably has an expander **1120** at leading end **1102** and a pivot **1116** at trailing end **1104**. Thus, implant **1100** will get taller at leading end **1102** instead of trailing end **1104**. Implant **1100** preferably includes a plurality of openings **1128** in trailing end **1104** to further enhance the growth of bone through implant **1100**. Openings **1128** preferably have a smaller diameter than that of pin receiving holes **1126** so that pins **1210** of implant holder **1200** (described below) will not pass therethrough. A person skilled in the art will appreciate that openings **1128** may be shaped in a variety of ways without departing from the broad scope of the present invention.

As best shown in FIG. **55**, tracks **1122**, **1124** of upper and lower members **1106**, **1108** of implant **1100** have a cooperating surface **1125**, and expander **1120** has a corresponding cooperating surface **1127** that contacts cooperating surface **1125** of tracks **1122**, **1124** to orient expander **1120** in a predetermined location. The cooperating surfaces orient expander **1120** within implant **1100** such that the axis of rotation of expander **1120** is parallel to the longitudinal axis of implant **1100** and more particularly center expander **1120** within implant **1100** such that the axis of rotation of expander **1120** coincides with longitudinal axis L of implant **1100**.

As shown in FIGS. **55**–**57**, implant holder **1200** includes a shaft **1202** having a distal end **1204** with an enlarged head **1206**. Head **1206** includes an implant engagement area **1208** with pins **1210**. Pins **1210** serve in a similar capacity as that described in relation to pins **910** above. Implant holder **1200** has a bore **1212** adapted to cooperatively receive an expander driver **1300** therethrough.

Expander driver **1300** has a shaft **1302** having a distal end **1304** with a tip **1306** having an expander engagement area **1308**. The leading end of tip **1306** is shaped to facilitate the instrument being advanced by a rotational movement through the implant packing material in implant **1100** until it reaches and is advanced into engagement with expander **1120**. Expander driver **1300** is adapted to extend into implant **1100** to move expander **1120** from an initial position to a final position to expand implant **1100**, as will be described in more detail in the method below.

As shown in FIGS. **58**–**60**, the method for inserting implant **1100** from a posterior approach to the spine is similar to that described in relation to FIGS. **19**–**38**, except that pins **1210** of implant holder **1200** are engaged with pin receiving holes **1126** and implant **1100** is advanced into the prepared recipient disc space by a rotational force, pushing movement, an impaction force, or a combination thereof through a guard in its unexpanded state.

As shown in FIG. **60**, after implant **1100** is properly seated in the disc space the procedure may be continued by preferably keeping implant holder **1200** attached to trailing end **1104** and extending expander driver **1300** through implant **1100** until tip **1306** cooperatively engages with expander **1120**. Expander driver **1300** is rotated to move expander **1120** so that at least leading end **1102** of implant **1100** is expanded so as to increase the maximum implant height which is proximate leading end **1102**.

It will be appreciated by those skilled in the art that many of the steps described in relation to the further packing of impacted implants with bone growth promoting materials are applicable to the further packing of arcuate implants with bone growth promoting materials and will not be repeated here.

Having completed the procedure on a first side, the procedure is then repeated as already described on the opposite side of the same disc space leading to the implantation of two implants **1100** in the same disc space.

A person skilled in the art will appreciate that although preferred, implant holder **1200** is not essential in order to expand the implant. For example, as shown in FIG. **61**, an implant **1400** may be inserted into the implantation space by a variety of known implant insertion devices and then expanded with expander driver **1300**.

FIGS. **62**–**66** show another preferred embodiment of an expandable arcuate interbody spinal fusion implant for use from the anterior approach with the instrumentation and methods of the present invention generally referred to by the number **1500**.

As shown in FIG. **62** implant **1500** is tapered from leading end **1502** towards trailing **1502** in an unexpanded position and preferably has a second expander **1520** at its leading end **1502** for moving at least a portion of the upper and lower members away from one another to increase the height of implant **1500**. The advantages of using a second expander are described in relation to implant **200** of FIG. **11**.

As shown in FIGS. **64**–**66**, another aspect of implant **1500** is that its upper and lower members **1506**, **1508** have screw holes **1548** passing therethrough adapted to receive bone screws **1550** passing from the interior of implant **1500** into adjacent vertebral bodies to anchor implant **1500** to an adjacent vertebral body. A purpose of the opposed bone screws is to rigidly secure the implant within the vertebral segment. A further purpose is to pull each of the adjacent vertebral bodies toward the implant and towards each other. If the articulation device holds the upper and lower members together, as in the embodiment of posterior implant **100** of FIGS. **1**–**7**, by closely encircling a post then the implant cannot expand at that location. Bone screws are not essential

to the operation of the invention, but are preferable for providing added securement of the implant to the adjacent vertebral bodies.

As shown in FIG. **65**, the side surface of implant **1500'** facing implant **1500** is contoured in a C-shape to permit the central longitudinal axis of implants **1500**, **1500'** to be closer together. Examples of such implants are taught by Michelson in U.S. Pat. No. 5,593,409 entitled "Interbody Spinal Fusion Implants," and co-pending U.S. patent application Ser. No. 09/566,272 entitled "Nested Interbody Spinal Fusion Implants," the disclosures of which are hereby incorporated by reference herein.

As shown in FIG. **66**, the trailing ends **1504**, **1504'** of implants **1500**, **1500'**, respectively, are shaped to generally conform to the anatomical configuration of the anterior aspect of the vertebral body to prevent the anterior lateral aspect of the implant from protruding from the spine.

As shown in FIGS. **62**–**64**, a preferred method for installing and expanding an implant with multiple expanders is similar to that described in relation to an implant with one expander such as shown in FIGS. **49**–**54**, except that an expander driver **1600** is utilized. Expander driver **1600** is similar to expander driver **1000** except that expander driver **1600** has an elongated tip **1606** adapted to extend through the openings of multiple expanders through implant **1500**, as shown in FIG. **63**. Tip **1606** permits multiple expanders **1520** to be moved simultaneously to expand implant **1500**. After installation of implants **1500**, bone screws **1550** may be inserted through bone screw holes **1548** using known methods.

FIG. **67** shows a schematic drawing representing another embodiment of an expandable arcuate interbody spinal fusion implant generally referred to by the number **1700** having a trailing end adapted for use with another embodiment of the instrumentation and methods of the present invention. Implant **1700** is similar to implant **1100** described above, except that in addition to pin receiving holes **1726**, trailing end **1704** also preferably includes opposed slots **1752** along the interior surface of trailing end **1704**. Slots **1752** are adapted to lockably receive flanges **1820** of an implant holder **1800**.

Implant holder **1800** includes a shaft **1802** having a distal end **1804**. Distal end **1804** includes an implant engagement area **1808** having pins **1810** and a bore **1812**. Preferably surrounding the perimeter of bore **1812** are upper and lower extensions **1814**, **1816**, respectively, and a pair of side extensions **1818**. Side extensions **1818** each have a flange **1820** adapted to cooperatively engage slots **1752** of implant **1700** when in a locked configuration.

In use, side extensions **1818** are pushed in to force side extensions **1818** to move together and move flanges **1820** into slots **1752** of implant **1700**, then released thereby locking implant holder **1800** to implant **1700**. Thereafter, an expander driver such as taught in relation to FIG. **55** may be inserted through bore **1812** and into implant **1700** to move an expander (not shown) to expand implant to **1700**.

While implant **1700** is being expanded, the height of trailing end **1702** decreases as upper and lower members **1706**, **1708**, respectively, articulate about pivot point **1716**. Upper and lower extensions **1814**, **1816**, respectively, are adapted to move inwardly toward the longitudinal axis of implant holder **1800** so that implant holder **1800** may remain engaged to implant **1700** while the implant is being expanded. It will be appreciated that other configurations of the implant holder are possible for permitting the implant holder to remain engaged to the implant during a change in the dimension of the implant and are within the broad scope of the present invention.

FIG. **68** shows another preferred embodiment of an expandable arcuate interbody spinal fusion implant for use from the anterior approach to the spine with the instrumentation and methods of the present invention generally referred to by the number **1900**. Implant **1900** is similar to implant **800** except that bone engaging projections **1914** are in the form of forward-facing ratchets, thus facilitating linear insertion while resisting expulsion from the implantation space. Implant **1900** may be inserted using methods such as those described in relation to implant **100** and instruments such as those described in relation to implant **800**.

While the instruments and methods of the present invention have been described relative to spinal fusion implants, it will be appreciated that the instruments and methods of the present invention may also be used with other implants such as inert spacers, artificial discs, bone grafts, and other inserts suitable for the intended purpose of substantially reducing or eliminating motion between two adjacent bone masses.

There is disclosed in the above description and the drawings implants and instruments and methods for use therewith, which fully and effectively accomplish the objectives of this invention. However, it will be apparent that variations and modifications of the disclosed embodiments may be made without departing from the principles of the invention.

What is claimed is:

1. An implant holder for inserting an interbody spinal implant into the spine of a human, said implant holder comprising:

an outer sleeve having a longitudinal axis, a passage along the longitudinal axis, and a distal end with an implant engagement area adapted to cooperatively engage the implant, said implant engagement area including extensions having an exterior surface adapted to engage the implant, said extensions being adapted to move between a disengaged position and an engaged position; and

a shaft having a passage, said shaft being adapted to move along at least a portion of said passage of said outer sleeve, said passage of said shaft being adapted to permit the passage of an instrument or fusion promoting substances therethrough.

2. The implant holder of claim **1**, wherein said outer sleeve has a minimum thickness along at least a portion of at least one of said extensions.

3. The implant holder of claim **1**, wherein at least two of said extensions are side extensions adapted to move across at least a portion of a width of the implant to engage said implant holder to the implant.

4. The implant holder of claim **1**, wherein at least two of said extensions are upper and lower extensions adapted to engage said implant holder to the implant.

5. The implant holder of claim **1**, wherein at least two of said extensions include a stop adapted to limit advancement of said implant holder into the implant.

6. The implant holder of claim **1**, wherein said extensions have an interior surface oriented toward said passage of said outer sleeve, said extensions being adapted to move away from the longitudinal axis of said outer sleeve to the engaged position by an outward force applied to said interior surface.

7. The implant holder of claim **6**, wherein said interior surface includes a ramp.

8. The implant holder of claim **7**, wherein said shaft includes a nose portion, said nose portion being beveled to cooperatively engage said ramp.

9. The implant holder of claim **1**, wherein said shaft is configured to move said extensions away from the longitudinal axis of said outer sleeve to the engaged position.

10. The implant holder of claim **1**, wherein the implant has a trailing end and said implant engagement area includes at least one projection adapted to cooperatively engage at least a portion of the trailing end of the implant.

11. The implant holder of claim **10**, wherein said at least one projection is adapted to cooperatively engage a recess in the trailing end of the implant.

12. The implant holder of claim **11**, wherein said at least one projection includes a flange and said recess is a slot.

13. The implant holder of claim **1**, wherein the implant is an expandable spinal implant having a trailing end, said implant engagement area including extensions having a projection adapted to cooperatively engage at least a portion of the trailing end of the expandable spinal implant.

14. The implant holder of claim **13**, wherein said projection is adapted to remain engaged to the expandable spinal implant while the expandable spinal implant is expanded from an unexpanded position to an expanded position.

15. The implant holder of claim **1**, wherein said shaft has a proximal end adapted to receive a handle.

16. The implant holder of claim **15**, wherein said handle is detachable.

17. The implant holder of claim **1**, further comprising a second shaft adapted to move along at least a portion of said passage of said shaft.

18. The implant holder of claim **17**, wherein the implant is an expandable spinal implant and said second shaft is an expander driver adapted to expand the expandable implant.

19. The implant holder of claim **18**, wherein the implant has an expander, the implant being adapted to increase in height with rotation of the expander, said expander driver having a distal end adapted to engage the expander of the expandable implant to permit rotation of the expander of the expandable implant.

20. The implant holder of claim **19**, wherein said expander driver includes a handle to allow said expander driver to be rotated upon engagement with the expander of the expandable implant.

21. The implant holder of claim **19**, wherein said distal end of said expander driver has a tip adapted to cooperatively engage an opening in the expander of the expandable implant.

22. The implant holder of claim **19**, wherein said expandable implant has at least a second expander, said expander driver being adapted to engage at least two of the expanders.

23. The implant holder of claim **22**, wherein said expander driver has an elongated tip adapted to cooperatively engage an opening in at least two of the expanders.

24. The implant holder of claim **18**, wherein said expander driver has a shaft engagement portion configured for lockable engagement with an expander driver engagement portion of said shaft.

25. The implant holder of claim **24**, wherein said expander driver is movable within said shaft between a first locked position not permiting rotation relative to said shaft and a second locked position permitting said expander driver to rotate relative to said shaft.

26. The implant holder of claim **25**, wherein said expander driver engagement portion limits the rotation of said expander driver to one direction in the second locked position.

27. The implant holder of claim **26**, wherein said expander driver engagement portion limits the amount of rotation of said expander driver in the second locked position.

28. The implant holder of claim **24**, wherein said shaft engagement portion of said expander driver has at least one detent adapted for lockable engagement with a spring-biased ball in said expander driver engagement portion of said shaft of said implant holder.

29. The implant holder of claim **18**, wherein said expander driver has an enlarged portion sized and shaped to fit into and rotate within said shaft of said implant holder.

30. The implant holder of claim **29**, wherein said enlarged portion of said expander driver has a shoulder and a peg adapted to cooperate with said shaft of said implant holder, said shaft of said implant holder having a cutout and a slot adapted to cooperate with said shoulder and peg of said enlarged portion of said expander driver to limit the rotation of said expander driver while engaged with said shaft of said implant holder.

31. The implant holder of claim **1**, in combination with a spinal implant having a trailing end adapted to be engaged to said implant holder.

32. The combination of claim **31**, wherein said spinal implant is a spinal fusion implant for promoting fusion between adjacent vertebral bodies, said implant having upper and lower surfaces for placement between and in contact with the adjacent vertebral bodies, each of said upper and lower surfaces having at least one opening adapted to permit bone from the adjacent vertebral bodies to grow through said implant.

33. The combination of claim **32**, wherein said spinal fusion implant has a hollow between said upper and lower surfaces for holding fusion promoting substances.

34. The combination of claim **32**, wherein said spinal fusion implant is an expandable implant having an expander adapted to increase the height of said implant upon movement from an insertion position to a final deployed position.

35. The combination of claim **34**, wherein said spinal fusion implant is separable into an upper member and a lower member to permit the placement of said expander between said upper and lower members.

36. The combination of claim **35**, wherein said upper and lower members are at least in part arcuate.

37. The combination of claim **36**, wherein said spinal fusion implant includes a thread along at least a portion of said upper and lower surfaces of said implant.

38. The combination of claim **35**, wherein said upper and lower members are configured for at least in part linear insertion into a prepared implantation space between the adjacent vertebral bodies.

39. The combination of claim **38**, wherein said spinal fusion implant includes surface projections configured to resist expulsion of said implant from an implantation space into which said spinal fusion implant is adapted to be inserted.

40. The combination of claim **35**, wherein said upper and lower members are angled relative to one another to induce an angulation of the adjacent vertebral bodies relative to one another.

41. The combination of claim **31**, wherein said implant comprises at least one of the following materials: metal, titanium, plastic, and ceramic appropriate for implantation in the human body.

42. The combination of claim **31**, wherein said implant is at least in part resorbable.

43. The combination of claim **31**, wherein said implant is an inert spacer.

44. The combination of claim **31**, wherein said implant is an artificial disc.

45. The combination of claim **31**, wherein said implant is a bone graft.

46. The combination of claim **31**, wherein said implant has a hollow between said upper and lower surfaces, said hollow having a composite material therein.

47. The combination of claim **32**, wherein said spinal fusion implant is in combination with a fusion promoting substance.

48. The combination of claim **47**, wherein said fusion promoting substance is selected from one of bone, bone derived products, demineralized bone matrix, ossifying proteins, bone morphogenetic protein, hydroxyapatite, and genes coding for the production of bone.

49. The combination of claim **32**, wherein said implant is in combination with a chemical substance adapted to inhibit scar formation.

50. The combination of claim **32**, wherein said implant is in combination with an antimicrobial material.

51. The implant holder of claim **1**, wherein said implant engagement area of said outer sleeve is adapted to linearly engage the implant.

52. The implant holder of claim **1**, wherein said implant engagement area of said outer sleeve is adapted to slideably engage the implant.

53. The implant holder of claim **1**, wherein said implant engagement area of said outer sleeve is adapted to lock to said implant.

54. The implant holder of claim **1**, wherein said outer sleeve includes at least one opening having a central axis generally perpendicular to the longitudinal axis of said outer sleeve.

55. The implant holder of claim **1**, wherein said implant engagement area includes at least four extensions having an exterior surface adapted to engage the implant.

56. The implant holder of claim **1**, wherein said shaft is configured to lock to said outer sleeve.

57. An implant holder for inserting an interbody spinal implant into the spine of a human, said implant holder comprising:

an outer sleeve having a longitudinal axis, a passage along the longitudinal axis, and a distal end with an implant engagement area adapted to cooperatively engage the implant, said implant engagement area including extensions having an exterior surface adapted to engage the implant, said extensions being adapted to move between a disengaged position with the extensions at a first distance from one another and an engaged position with the extensions at a second distance from one another, the second distance being larger than the first distance; and

a shaft having a passage, said shaft being adapted to move along at least a portion of said passage of said outer sleeve, said passage of said shaft being adapted to permit the passage of an instrument or fusion promoting substances therethrough.

58. The implant holder of claim **57**, wherein said extensions have an interior surface oriented toward said passage of said outer sleeve, said extensions being adapted to move away from the longitudinal axis of said outer sleeve to the engaged position by an outward force applied to said interior surface.

59. The implant holder of claim **57**, wherein said shaft is configured to move said extensions away from the longitudinal axis of said outer sleeve to the engaged position.

60. The implant holder of claim **57**, wherein the implant has a trailing end and said implant engagement area includes at least one projection adapted to cooperatively engage at least a portion of the trailing end of the implant.

61. The implant holder of claim **60**, wherein said at least one projection is adapted to cooperatively engage a recess in the trailing end of the implant.

62. The implant holder of claim **61**, wherein said at least one projection includes a flange and said recess is a slot.

63. The implant holder of claim **57**, wherein the implant is an expandable spinal implant having a trailing end, said implant engagement area including extensions having a projection adapted to cooperatively engage at least a portion of the trailing end of the expandable spinal implant.

64. The implant holder of claim **63**, wherein said projection is adapted to remain engaged to the expandable spinal implant while the expandable spinal implant is expanded from an unexpanded position to an expanded position.

65. The implant holder of claim **57**, wherein said shaft has a proximal end adapted to receive a handle.

66. The implant holder of claim **65**, wherein said handle is detachable.

67. The implant holder of claim **57**, further comprising a second shaft adapted to move along at least a portion of said passage of said shaft.

68. The implant holder of claim **67**, wherein the implant is an expandable spinal implant and said second shaft is an expander driver adapted to expand the expandable implant.

69. The implant holder of claim **68**, wherein the implant has an expander, the implant being adapted to increase in height with rotation of the expander, said expander driver having a distal end adapted to engage the expander of the expandable implant to permit rotation of the expander of the expandable implant.

70. The implant holder of claim **69**, wherein said expander driver includes a handle to allow said expander driver to be rotated upon engagement with the expander of the expandable implant.

71. The implant holder of claim **69**, wherein said distal end of said expander driver has a tip adapted to cooperatively engage an opening in the expander of the expandable implant.

72. The implant holder of claim **69**, wherein said expandable implant has at least a second expander, said expander driver being adapted to engage at least two of the expanders.

73. The implant holder of claim **72**, wherein said expander driver has an elongated tip adapted to cooperatively engage an opening in at least two of the expanders.

74. The implant holder of claim **68**, wherein said expander driver has a shaft engagement portion configured for lockable engagement with an expander driver engagement portion of said shaft.

75. The implant holder of claim **74**, wherein said expander driver is movable within said shaft between a first looked position not permitting rotation relative to said shaft and a second locked position permitling said expander driver to rotate relative to said shaft.

76. The implant holder of claim **75**, wherein said expander driver engagement portion limits the rotation of said expander diver to one direction in the second locked position.

77. The implant holder of claim **76**, wherein said expander driver engagement portion limits the amount of rotation of said expander driver in the second locked position.

78. The implant holder of claim **74**, wherein said shaft engagement portion of said expander driver has at least one

detent adapted for lockable engagement with a spring-biased ball in said expander driver engagement portion of said shaft of said implant holder.

79. The implant holder of claim **68**, wherein said expander driver has an enlarged portion sized and shaped to fit into and rotate within said shaft of said implant holder.

80. The implant holder of claim **79**, wherein said enlarged portion of said expander driver has a shoulder and a peg adapted to cooperate with said shaft of said implant holder, said shaft of said implant holder having a cutout and a slot adapted to cooperate with said shoulder and peg of said enlarged portion of said expander driver to limit the rotation of said expander driver while engaged with said shaft of said implant holder.

81. The implant holder of claim **57**, in combination with a spinal implant having a trailing end adapted to be engaged to said implant holder.

82. The combination of claim **81**, wherein said spinal implant is a spinal fusion implant for promoting fusion between adjacent vertebral bodies, said implant having upper and lower surfaces for placement between and in contact with the adjacent vertebral bodies, each of said upper and lower surfaces having at least one opening adapted to permit bone from the adjacent vertebral bodies to grow through said implant.

83. The combination of claim **82**, wherein said spinal fusion implant has a hollow between said upper and lower surfaces for holding fusion promoting substances.

84. The combination of claim **82**, wherein said spinal fusion implant is an expandable implant having an expander adapted to increase the height of said implant upon movement from an insertion position to a final deployed position.

85. The combination of claim **84**, wherein said spinal fusion implant is separable into an upper member and a lower member to permit the placement of said expander between said upper and lower members.

86. The combination of claim **85**, wherein said upper and lower members are at least in part arcuate.

87. The combination of claim **86**, wherein said spinal fusion implant includes a thread along at least a portion of said upper and lower surfaces of said implant.

88. The combination of claim **85**, wherein said upper and lower members are configured for at least in part linear insertion into a prepared implantation space between the adjacent vertebral bodies.

89. The combination of claim **88**, wherein said spinal fusion implant includes surface projections configured to resist expulsion of said implant from an implantation space into which said spinal fusion implant is adapted to be inserted.

90. The combination of claim **85**, wherein said upper and lower members are angled relative to one another to induce an angulation of the adjacent vertebral bodies relative to one another.

91. The combination of claim **81**, wherein said implant comprises at least in part of one of bone and bone growth promoting material.

92. The combination of claim **81**, wherein said implant comprises at least one of the following materials: metal, titanium, plastic, and ceramic appropriate for implantation in the human body.

93. The combination of claim **81**, wherein said implant is at least in part resorbable.

94. The combination of claim **81**, wherein said implant is formed of a porous material.

95. The combination of claim **81**, wherein said implant is an inert spacer.

96. The combination of claim **81**, wherein said implant is an artificial disc.

97. The combination of claim **81**, wherein said implant is a bone graft.

98. The combination of claim **81**, wherein said implant has a hollow between said upper and lower surfaces, said hollow having a composite material therein.

99. The combination of claim **98**, wherein said composite material is other than bone.

100. The combination of claim **82**, wherein said spinal fusion implant is in combination with a fusion promoting substance.

101. The combination of claim **100**, wherein said fusion promoting substance is selected from one of bone, bone derived products, demineralized bone matrix, ossifying proteins, bone morphogenetic protein, hydroxyapatite, and genes coding for the production of bone.

102. The combination of claim **82**, wherein said implant is treated with a fusion promoting substance.

103. The combination of claim **82**, wherein said implant is in combination with a chemical substance adapted to inhibit scar formation.

104. The combination of claim **82**, wherein said implant is in combination with an antimicrobial material.

105. The implant holder of claim **57**, wherein said implant engagement area of said outer sleeve is adapted to linearly engage the implant.

106. The implant holder of claim **57**, wherein said implant engagement area of said outer sleeve is adapted to slideably engage the implant.

107. The implant holder of claim **57**, wherein said implant engagement area of said outer sleeve is adapted to lock to said implant.

108. The implant holder of claim **58**, wherein said interior surface includes a ramp.

109. The implant holder of claim **108**, wherein said shaft includes a nose portion, said nose portion being beveled to cooperatively engage said ramp.

110. The implant holder of claim **57**, wherein said outer sleeve includes at least one opening having a central axis generally perpendicular to the longitudinal axis of said outer sleeve.

111. The implant holder of claim **57**, wherein said outer sleeve has a minimum thickness along at least a portion of at least one of said extensions.

112. The implant holder of claim **57**, wherein at least two of said extensions are side extensions adapted to move across at least a portion of a width of the implant to engage said implant holder to the implant.

113. The implant holder of claim **57**, wherein at least two of said extensions are upper and lower extensions adapted to engage said implant holder to the implant.

114. The implant holder of claim **57**, wherein at least two of said extensions include a stop adapted to limit advancement of said implant holder into the implant.

115. The implant holder of claim **57**, wherein said implant engagement area includes at least four extensions having an exterior surface adapted to engage the implant.

116. The implant holder of claim **57**, wherein said shaft is configured to lock to said outer sleeve.

117. An implant holder for inserting an interbody spinal implant into the spine of a human, said implant holder comprising:

an outer sleeve having a longitudinal axis, a passage along the longitudinal axis, and a distal end with an implant engagement area adapted to cooperatively engage the implant; and

a shaft having a passage, said shaft being adapted to move along at least a portion of said passage of said outer sleeve, said passage of said shaft being adapted to permit the passage of an instrument or fusion promoting substances therethrough, said shaft having a first portion with a reduced external dimension configured to move within said passage of said outer sleeve, a second portion having an enlarged external dimension, said a junction between said first and second portions, said junction forming a shoulder adapted to limit the depth of insertion of said shaft into said outer sleeve.

118. The implant holder of claim **117**, wherein said first portion of said shaft has a peg adapted to cooperate with said outer sleeve, said outer sleeve having a cutout adapted to cooperate with said shoulder and said peg of said first portion of said shaft to lock said shaft to said outer sleeve of said implant holder.

119. An implant holder for inserting an interbody spinal implant into the spine of a human, said implant holder comprising:

an outer sleeve having a longitudinal axis, a passage along the longitudinal axis, and a distal end with an implant engagement area adapted to cooperatively engage the implant; and

a shaft having a passage, said shaft being adapted to move along at least a portion of said passage of said outer sleeve, said passage of said shaft being adapted to permit the passage of an instrument or fusion promoting substances therethrough, said passage of said outer sleeve having a reduced cross-sectional dimension transverse to the longitudinal axis proximate said distal end of said outer sleeve.

120. The implant holder of claim **119**, wherein said implant engagement area has a width adapted to engage the width of the implant, the reduced cross-sectional dimension being along the width of said implant engagement area.

121. The implant holder of claim **57**, wherein the implant has a width, said implant engagement area having a width adapted to engage the width of the implant.

122. The implant holder of claim **119**, wherein said implant engagement area includes extensions having an exterior surface adapted to engage the implant, said extensions being adapted to move between a disengaged position with the extensions at a first distance from one another and an engaged position with the extensions at a second distance from one another, the second distance being larger than the first distance.

123. The implant holder of claim **122**, wherein said outer sleeve has a minimum thickness along at least a portion of at least one of said extensions.

124. The implant holder of claim **122**, wherein at least two of said extensions are side extensions adapted to move across at least a portion of a width of the implant to engage said implant holder to the implant.

125. The implant holder of claim **122**, wherein at least two of said extensions are upper and lower extensions adapted to engage said implant holder to the implant.

126. The implant holder of claim **122**, wherein at least two of said extensions include a stop adapted to limit advancement of said implant holder into the implant.

127. The implant holder of claim **122**, wherein said extensions have an interior surface oriented toward said passage of said outer sleeve, said extensions being adapted to move away from the longitudinal axis of said outer sleeve to the engaged position by an outward force applied to said interior surface.

128. The implant holder of claim **127**, wherein said interior surface includes a ramp.

129. The implant holder of claim **128**, wherein said shaft includes a nose portion, said nose portion being beveled to cooperatively engage said ramp.

130. The implant holder of claim **122**, wherein said shaft is configured to move said extensions away from the longitudinal axis of said outer sleeve to the engaged position.

131. The implant holder of claim **119**, wherein the implant has a trailing end and said implant engagement area includes at least one projection adapted to cooperatively engage at least a portion of the trailing end of the implant.

132. The implant holder of claim **131**, wherein said at least one projection is adapted to cooperatively engage a recess in the trailing end of the implant.

133. The implant holder of claim **132**, wherein said at least one projection includes a flange and said recess is a slot.

134. The implant holder of claim **119**, wherein the implant is an expandable spinal implant having a trailing end, said implant engagement area including extensions having a projection adapted to cooperatively engage at least a portion of the trailing end of the expandable spinal implant.

135. The implant holder of claim **134**, wherein said projection is adapted to remain engaged to the expandable spinal implant while the expandable spinal implant is expanded from an unexpanded position to an expanded position.

136. The implant holder of claim **119**, wherein said shaft has a proximal end adapted to receive a handle.

137. The implant holder of claim **136**, wherein said handle is detachable.

138. The implant holder of claim **119**, further comprising a second shaft adapted to move along at least a portion of said passage of said shaft.

139. The implant holder of claim **138**, wherein the implant is an expandable spinal implant and said second shaft is an expander driver adapted to expand the expandable implant.

140. The implant holder of claim **139**, wherein the implant has an expander, the implant being adapted to increase in height with rotation of the expander, said expander driver having a distal end adapted to engage the expander of the expandable implant to permit rotation of the expander of the expandable implant.

141. The implant holder of claim **140**, wherein said expander driver includes a handle to allow said expander driver to be rotated upon engagement with the expander of the expandable implant.

142. The implant holder of claim **140**, wherein said distal end of said expander driver has a tip adapted to cooperatively engage an opening in the expander of the expandable implant.

143. The implant holder of claim **140**, wherein said expandable implant has at least a second expander, said expander driver being adapted to engage at least two of the expanders.

144. The implant holder of claim **143**, wherein said expander driver has an elongated tip adapted to cooperatively engage an opening in at least two of the expanders.

145. The implant holder of claim **139**, wherein said expander driver has a shaft engagement portion configured for lockable engagement with an expander driver engagement portion of said shaft.

146. The implant holder of claim **145**, wherein said expander driver is movable within said shaft between a first locked position not permiting rotation relative to said shaft

and a second locked position permitting said expander driver to rotate relative to said shaft.

147. The implant holder of claim **146**, wherein said expander driver engagement portion limits the rotation of said expander driver to one direction in the second locked position.

148. The implant holder of claim **147**, wherein said expander driver engagement portion limits the amount of rotation of said expander driver in the second locked position.

149. The implant holder of claim **145**, wherein said shaft engagement portion of said expander driver has at least one detent adapted for lockable engagement with a spring-biased ball in said expander driver engagement portion of said shaft of said implant holder.

150. The implant holder of claim **139**, wherein said expander driver has an enlarged portion sized and shaped to fit into and rotate within said shaft of said implant holder.

151. The implant holder of claim **150**, wherein said enlarged portion of said expander driver has a shoulder and a peg adapted to cooperate with said shaft of said implant holder, said shaft of said implant holder having a cutout and a slot adapted to cooperate with said shoulder and peg of said enlarged portion of said expander driver to limit the rotation of said expander driver while engaged with said shaft of said implant holder.

152. The implant holder of claim **119**, in combination with a spinal implant having a trailing end adapted to be engaged to said implant holder.

153. The combination of claim **152**, wherein said spinal implant is a spinal fusion implant for promoting fusion between adjacent vertebral bodies, said implant having upper and lower surfaces for placement between and in contact with the adjacent vertebral bodies, each of said upper and lower surfaces having at least one opening adapted to permit bone from the adjacent vertebral bodies to grow through said implant.

154. The combination of claim **153**, wherein said spinal fusion implant has a hollow between said upper and lower surfaces for holding fusion promoting substances.

155. The combination of claim **153**, wherein said spinal fusion implant is an expandable implant having an expander adapted to increase the height of said implant upon movement from an insertion position to a final deployed position.

156. The combination of claim **155**, wherein said spinal fusion implant is separable into an upper member and a lower member to permit the placement of said expander between said upper and lower members.

157. The combination of claim **156**, wherein said upper and lower members are at least in part arcuate.

158. The combination of claim **157**, wherein said spinal fusion implant includes a thread along at least a portion of said upper and lower surfaces of said implant.

159. The combination of claim **156**, wherein said upper and lower members are configured for at least in part linear insertion into a prepared implantation space between the adjacent vertebral bodies.

160. The combination of claim **159**, wherein said spinal fusion implant includes surface projections configured to resist expulsion of said implant from an implantation space into which said spinal fusion implant is adapted to be inserted.

161. The combination of claim **156**, wherein said upper and lower members are angled relative to one another to induce an angulation of the adjacent vertebral bodies relative to one another.

162. The combination of claim **152**, wherein said implant comprises at least in part of one of bone and bone growth promoting material.

163. The combination of claim **152**, wherein said implant comprises at least one of the following materials: metal, titanium, plastic, and ceramic appropriate for implantation in the human body.

164. The combination of claim **152**, wherein said implant is at least in part resorbable.

165. The combination of claim **152**, wherein said implant is formed of a porous material.

166. The combination of claim **152**, wherein said implant is an inert spacer.

167. The combination of claim **152**, wherein said implant is an artificial disc.

168. The combination of claim **152**, wherein said implant is a bone graft.

169. The combination of claim **152**, wherein said implant has a hollow between said upper and lower surfaces, said hollow having a composite material therein.

170. The combination of claim **169**, wherein said composite material is other than bone.

171. The combination of claim **153**, wherein said spinal fusion implant is in combination with a fusion promoting substance.

172. The combination of claim **171**, wherein said fusion promoting substance is selected from one of bone, bone derived products, demineralized bone matrix, ossifying proteins, bone morphogenetic protein, hydroxyapatite, and genes coding for the production of bone.

173. The combination of claim **153**, wherein said implant is treated with a fusion promoting substance.

174. The combination of claim **153**, wherein said implant is in combination with a chemical substance adapted to inhibit scar formation.

175. The combination of claim **153**, wherein said implant is in combination with an antimicrobial material.

176. The implant holder of claim **119**, wherein said implant engagement area of said outer sleeve is adapted to linearly engage the implant.

177. The implant holder of claim **119**, wherein said implant engagement area of said outer sleeve is adapted to slideably engage the implant.

178. The implant holder of claim **119**, wherein said implant engagement area of said outer sleeve is adapted to lock to said implant.

179. The implant holder of claim **119**, wherein said outer sleeve includes at least one opening having a central axis generally perpendicular to the longitudinal axis of said outer sleeve.

180. The implant holder of claim **119**, wherein said implant engagement area includes at least four extensions having an exterior surface adapted to engage the implant.

181. The implant holder of claim **119**, wherein said shaft is configured to lock to said outer sleeve.

* * * * *