US005658335A

United States Patent [19]

Allen

[11] Patent Number: 5,658,335

[45] Date of Patent: Aug. 19, 1997

[54] **SPINAL FIXATOR**

[75] Inventor: **Ronald C. Allen**, Foster City, Calif.

[73] Assignee: **Cohort Medical Products Group, Inc.**, Hayward, Calif.

[21] Appl. No.: **401,212**

[22] Filed: **Mar. 9, 1995**

[51] **Int. Cl.**[6] **A61F 2/44**

[52] **U.S. Cl.** **623/17**; 606/61

[58] **Field of Search** 623/16, 17, 18; 606/60, 61, 62, 63, 64

[56] **References Cited**

U.S. PATENT DOCUMENTS

3,741,205	6/1973	Markolf et al. .	
4,289,123	9/1981	Dunn .	
4,309,777	1/1982	Patil .	
4,401,112	8/1983	Rezaian .	
4,502,160	3/1985	Moore et al. .	
4,502,161	3/1985	Wall .	
4,553,273	11/1985	Wu	623/17 X
4,599,086	7/1986	Doty	623/17
5,015,247	5/1991	Michelson	623/17 X
5,123,926	6/1992	Pisharodi	623/17
5,458,641	10/1995	Ramirez Jimenez	623/17
5,534,029	7/1996	Shima	606/61 X
5,534,031	7/1996	Matsuzaki et al.	606/61 X

FOREIGN PATENT DOCUMENTS

1107854	8/1984	U.S.S.R.	623/17
1560184	4/1990	U.S.S.R.	623/17
9426213	11/1994	WIPO	623/17

Primary Examiner—Mary Beth Jones
Attorney, Agent, or Firm—James E. Eakin

[57] **ABSTRACT**

An adjustable spinal fixator for insertion between adjacent vertebrae comprises a contoured housing defining convex edges to fit within the concavity of the vertebral body. An externally threaded core extends through the housing, and a pair of internally threaded nut assemblies attach to the core member. Four crown members with teeth are separately mounted within the housing and retract and variably extend with the movement of the movable nuts on the core member. Two of the crown members extend and retract from the top of the housing, and the remaining two crown members extend and retract from the bottom of the housing. The spinal fixator is positioned between adjacent vertebrae with the crown members retracted so that the teeth are below the convex edges of the housing. Following placement, the crown members are extended outwardly from the top and bottom of the housing by rotation of the core member which causes the teeth to penetrate the bone at an angle to secure the spinal fixator in position. Preferably, a bone graft surrounds the implanted spinal fixator which defines apertures for bony ingrowth. Several sizes of spinal fixators exist to accommodate differing anatomies of the spine.

3 Claims, 4 Drawing Sheets

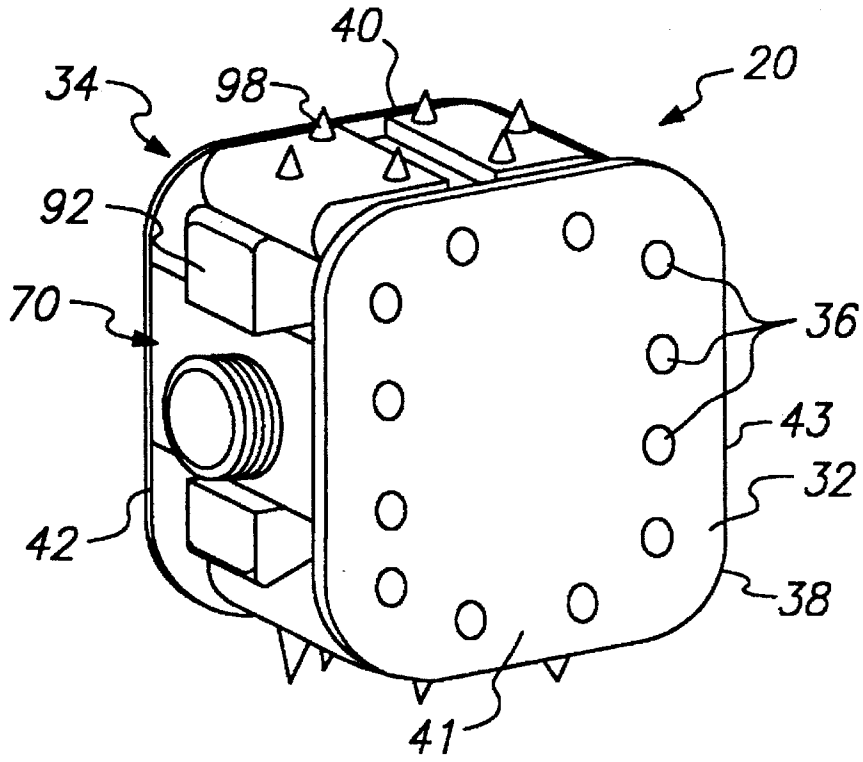

MEDTRONIC EXHIBIT 1039

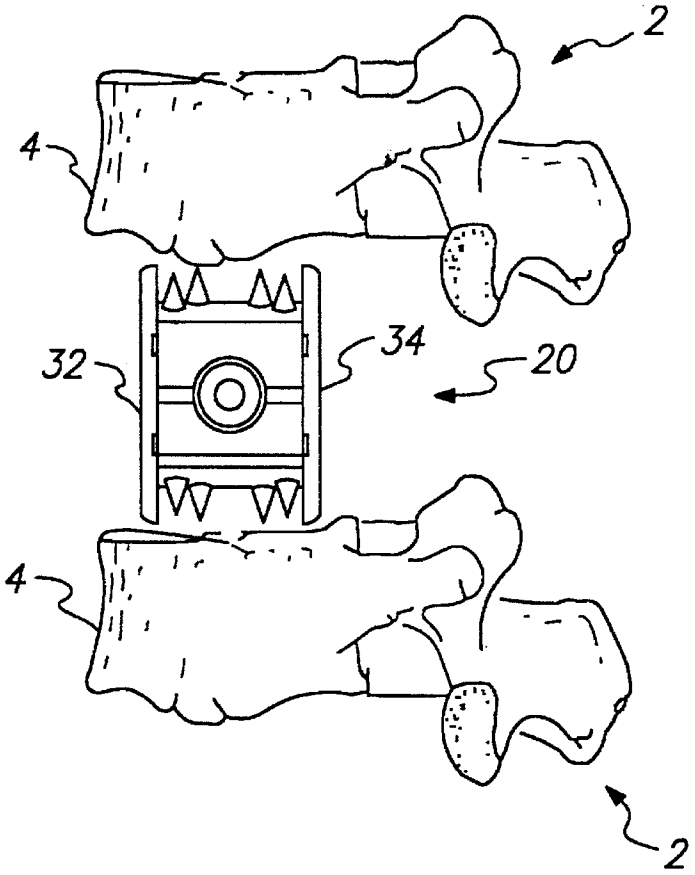

FIG. 1

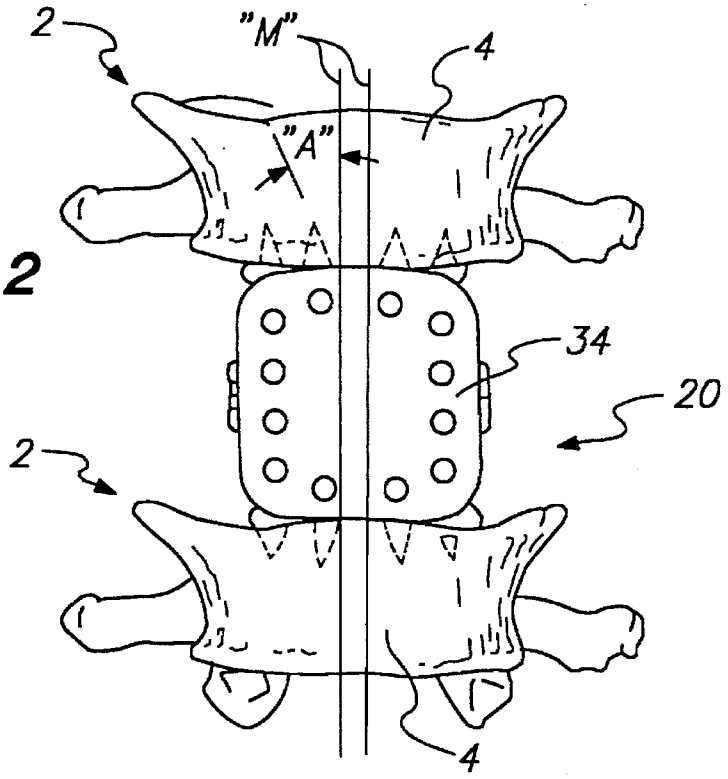

FIG. 2

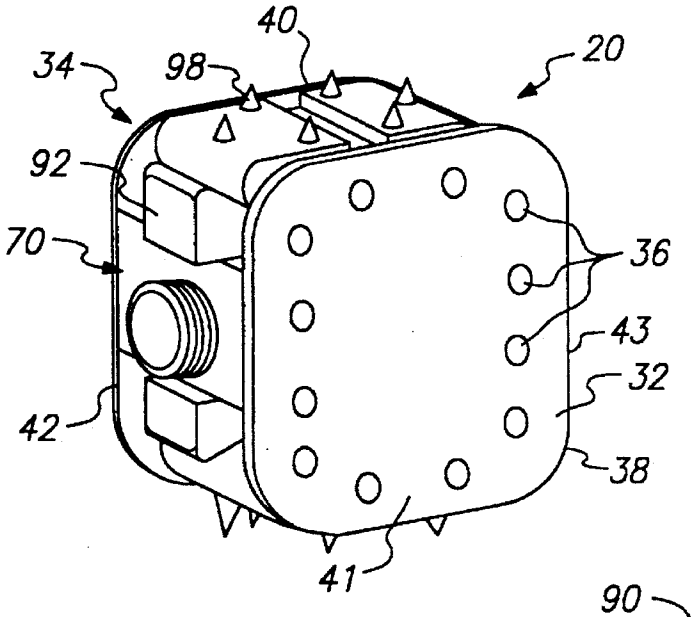

FIG. 3

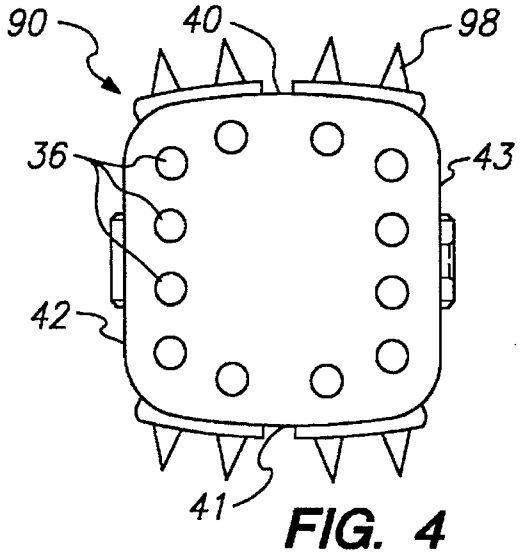

FIG. 4

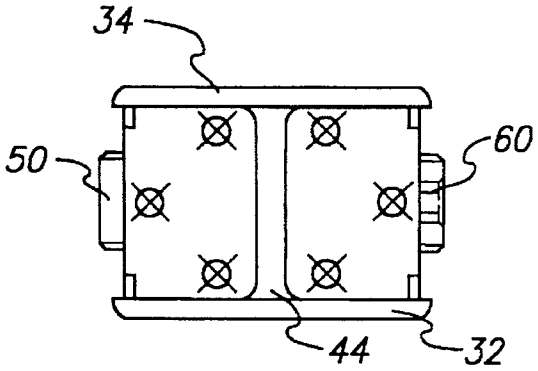

FIG. 5

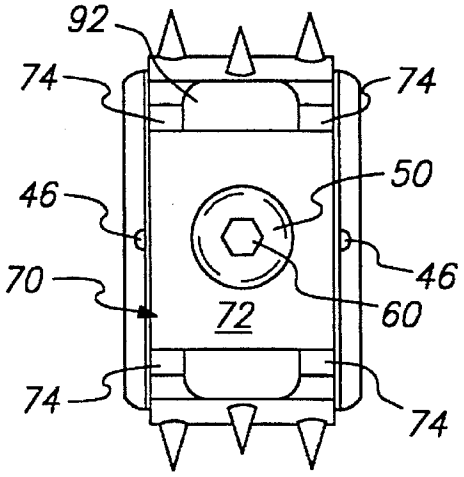

FIG. 6

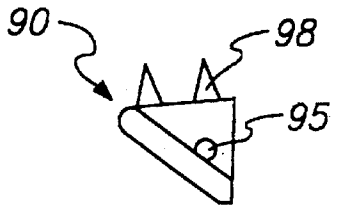

FIG. 7

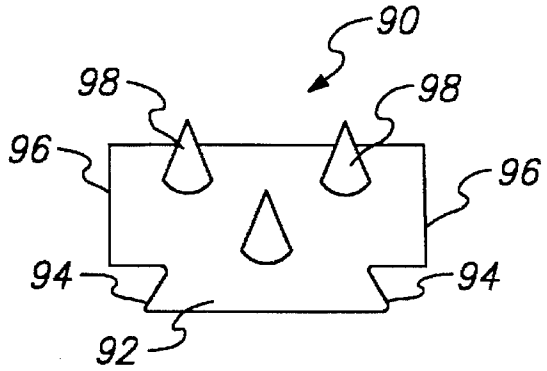

FIG. 8

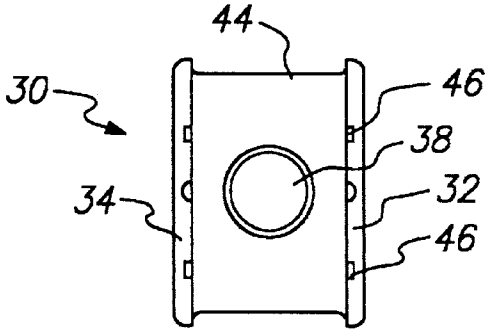

FIG. 9

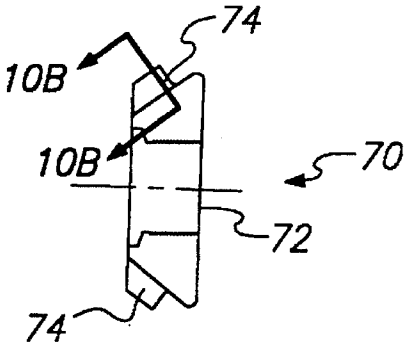

FIG. 10A

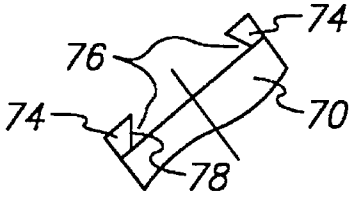

FIG. 10B

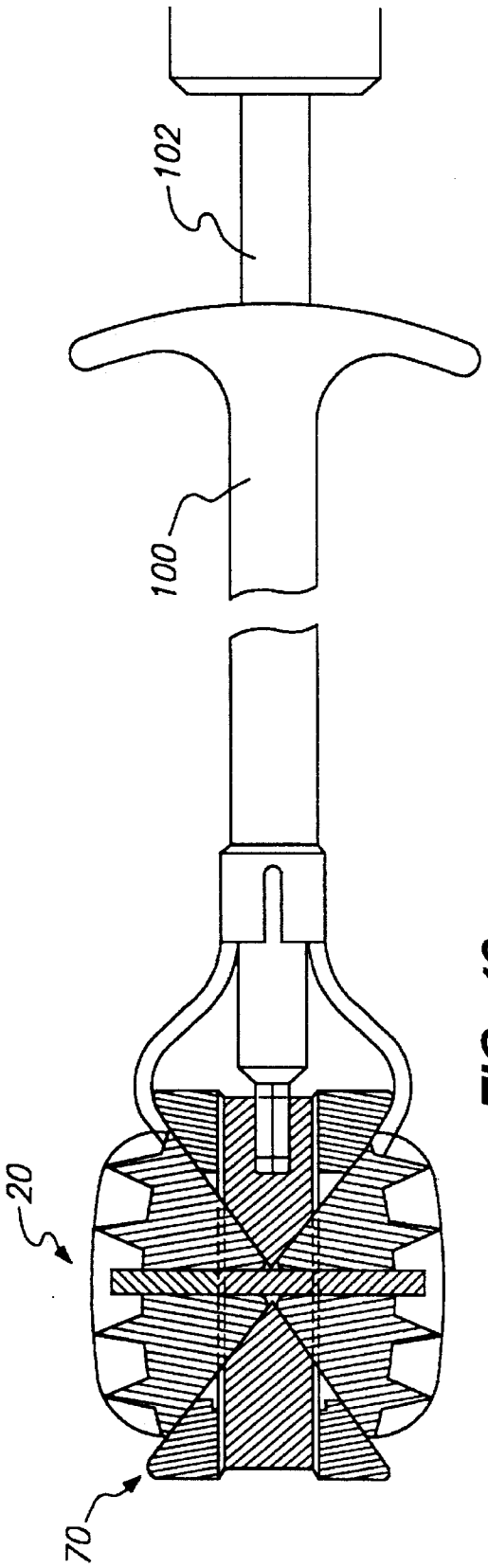

FIG. 12

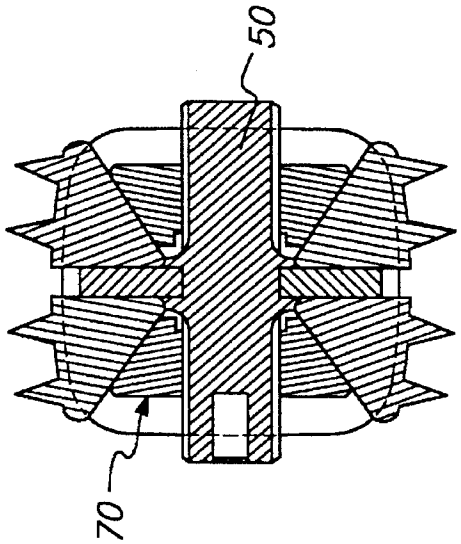

FIG. 13

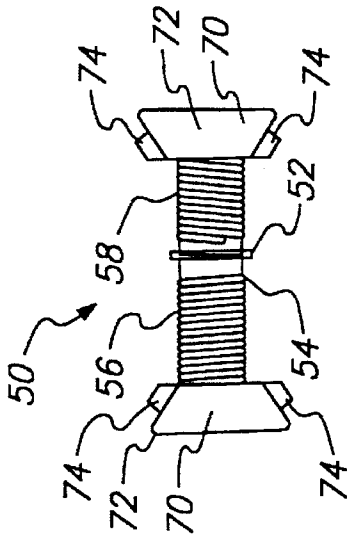

FIG. 11

SPINAL FIXATOR

FIELD OF THE INVENTION

The present invention relates to apparatus for immobilizing the spine, or a portion of the spine. More particularly, the invention relates to a contoured, adjustable spinal fixator for insertion between damaged or resected vertebrae.

BACKGROUND OF INVENTION

Spinal stabilization, or immobilization, may become necessary during treatment of a number of illnesses or injures involving the spinal column. Immobilization of the spine may be required to treat spinal fractures, infections affecting the spinal column, tumors associated with the spinal column, and any other injury or illness causing spinal instability. Instability of the spine requires intervention to relieve pain and to maintain neurological function.

Surgical intervention is frequently necessary to immobilize spinal vertebrae, and is particularly suitable in those cases where surgical intervention is required in any event to treat the underlying disease processes, for example, tumors of the spine and vertebral necrosis caused by infectious agents. In such cases, the damaged or necrotic bone is removed, and the remaining bone is resected.

Surgical methods for spinal immobilization may include the placement of bone grafts, or synthetic polymers, to replace necrotic, and/or diseased bone. Such materials may also be implanted in the intervertebral space between adjacent vertebrae to replace damaged discs and immobilize the surrounding vertebrae. Bone grafts require at least several months for fusion, thereby requiring the wearing of extremely uncomfortable and restrictive external stabilization devices, and bone grafts may provide insufficient stabilization in those situations when the graft is not completely successful, or where ongoing treatment interferes with fusion of the graft. Synthetic polymer implants generally also require metal pins or rods to compensate for bonding difficulties, and such implants are difficult to implant and subject to stress fractures. Additionally, the pins may break thereby eliminating any stability produced by the polymer, and the polymer may then move from its implanted position.

Metal spinal fixators, in addition to the metal pins discussed above, are known in the prior art. Such fixators may include bone screws, rods, plates, a combination of screws and plates, and a combination of rods and screws. Bone screws, rods and plates immobilize a vertebra by connecting it to an adjacent vertebra. The rods and plates are generally placed on the outside of the lateral portion of the vertebrae, and the screws are used to secure the position of the plates and rods. One such device is shown in U.S. Pat. No. 3,741,205 which discloses an open frame, rectangular plate secured to the outer anterior aspect of the vertebrae with pins. Another device utilizing rods attached through brackets which are attached by screws to the lateral aspect of the vertebrae is disclosed in U.S. Pat. No. 4,289,123. Such devices are inherently limited because the attachment to the bone generally is made with small screws or pins and is thereby subject to displacement from movement of the spine.

Spinal fixators for insertion in the space between vertebrae are known in the prior art. Such devices are designed to immobilize the spine and to maintain the typical distance between adjacent vertebrae thereby decompressing the spine to relieve pressure on the spinal cord.

One such spinal fixator for insertion between vertebrae is described in U.S. Pat. No. 4,401,112 which teaches a turnbuckle device with terminal spikes. A plate is attached to the turnbuckle and to the anterior aspect of the two adjacent vertebrae. Another spinal fixator is described in U.S. Pat. No. 4,599,086 which discloses a body having two retractable pins inserted between the vertebrae and secured in position with an externally mounted plate and screws.

In addition to the spinal fixators discussed above, other devices exist which are used to replace an intervertebral disc or a meniscus between a joint. A replacement for an intervertebral disc is disclosed in U.S. Pat. No. 4,309,777, and comprises a spring operated insert secured to the adjacent vertebrae with spikes. A resilient, rubber meniscus replacement is shown in U.S. Pat. No. 4,502,161.

A heretofore unmet needs exists for an adjustable spinal fixator that may be easily inserted between two vertebrae for immobilization thereof without the need for additional screws and/or plates to secure the position of the fixator.

SUMMARY OF THE INVENTION WITH OBJECTS

A spinal fixator for insertion between adjacent vertebrae and embodying the principles of the present invention comprises a contoured housing dimensioned to fit in the concavity of the vertebral body. A core member extends through the housing, and a pair of movable nut assemblies are attached to threads on the core member. Four crown members are mounted within the housing to extend and retract with the movement of the movable nut assemblies on the core member. Two of the crown members extend and retract from the top of the housing, and the remaining two crown members extend and retract from the bottom of the housing. Teeth extend outwardly from the surface of the four crown members and at an angle away from midline. The spinal fixator is positioned between the adjacent vertebrae with the teeth retracted. Following placement, the crown members are variably extended outwardly from the top and bottom of the housing by rotation of the core member which causes the teeth to penetrate the bone to secure the spinal fixator in position. Preferably, a bone graft surrounds the implanted spinal fixator which defines apertures for bony ingrowth. Several sizes of spinal fixators exist to accommodate differing anatomies of the spine.

A general object of the invention is to provide a spinal fixator that overcomes the drawbacks and limitations of the prior art.

A specific object of the invention is to provide a spinal fixator with a convex housing which fits within the contours of the concave vertebral bodies, and is cupped by the bony edges of the bodies, enabling secure placement without the necessity for additional screws or plates.

Another specific object of the present invention is to provide a spinal fixator having teeth positioned to enter the vertebral body at an angle away from midline to prevent displacement of the fixator during spinal flexure and/or extension.

Yet another specific object of the present invention is to provide an adjustable spinal fixator having retractable teeth to adjust the height of the fixator to enable pre-positioning between two adjacent vertebrae without scraping of the vertebral body surfaces during positioning.

Yet one more specific object of the present invention is to provide a spinal fixator with a plurality of apertures to facilitate bony ingrowth to further stabilize the fixator.

Still one more specific object of the present invention is to provide adjustable spinal fixators of various sizes and having selectable extension lengths.

Still another specific object of the present invention is to provide a spinal fixator made from a lightweight material, preferably titanium, which enhances postoperative radiographic evaluation.

One more specific object of the present invention is to provide a spinal fixator with four, separate, extendable crown members thereby enabling engagement by the teeth of one crown member at a different height than engagement by others of the three remaining crown members, the four separate crown members enabling the fixator to better accommodate to the contours of the vertebrae bodies.

These and other objects, advantages and features of the present invention will become more apparent upon considering the following detailed description of preferred embodiments, presented in conjunction with the accompanying drawings.

BRIEF DESCRIPTION OF THE DRAWINGS

IN THE DRAWINGS:

FIG. **1** is a lateral view of a spinal fixator embodying the principles of the present invention and shown in its fully retracted position between two vertebrae prior to fixation to the vertebrae.

FIG. **2** is a posterior view of the spinal fixator of FIG. **1** shown following fixation with the teeth implanted in the bodies of the two vertebrae which surround and cup the spinal fixator therebetween.

FIG. **3** is a perspective view of a spinal fixator with the crown portions partially retracted.

FIG. **4** is a front view of a preferred spinal fixator with the crown portions fully extended.

FIG. **5** is a top view of the spinal fixator of FIG. **4**.

FIG. **6** is a side view of the spinal fixator of FIG. **4** with the crown portions shown fully extended.

FIG. **7** is a side view of a crown portions of the spinal fixator.

FIG. **8** is a side view in elevation of the crown portion of the spinal fixator showing three teeth and the flange connector.

FIG. **9** is a side view of the housing of the spinal fixator.

FIGS. **10A** and **10B** are side and partial sectional views, respectively, of the nut assembly.

FIG. **11** is a side view of the threaded core and nut assembly.

FIG. **12** is a from sectional view of the assembled spinal fixator in its fully retracted position and shown with the insertion tool.

FIG. **13** is a front sectional view of the spinal fixator with the four crowns fully extended.

DESCRIPTION OF PREFERRED EMBODIMENTS

Referring to FIGS. **1** and **2**, a spinal fixator embodying the principles of the present invention is shown generally at **20**. In FIG. **1**, the spinal fixator **20** is shown in side view in its fully retracted, insertion position prior to securing it between the vertebrae **2**. The anterio-lateral approach shown in FIG. **1** is preferred for insertion of the fixator **20**. In the posterior view shown in FIG. **2**, the spinal fixator **20** is shown in its extended position fixed in the concavities of and between the two adjacent vertebrae bodies **4**, with the teeth in hidden view.

The spinal fixator **20** is made from a non-corrosive, lightweight metal, titanium 6-4V is preferred, suitable for implanting within the body. When titanium is used for manufacture, postsurgical radiological evaluation is enhanced, but it will be recognized by those skilled in the art that other materials may be used for the spinal fixator, such as surgical quality stainless steel and surgical grade synthetic materials.

Referring now additionally to FIGS. **3–9**, the fixator **20** defines a one-piece contoured housing **30** having a front cover **32** which is generally parallel to a back cover **34**. All surfaces of the front and back covers **32**, **34** are contoured and smooth, and a plurality of openings **36** preferable are provided in the covers **32**, **34** to facilitate bony ingrowth. As shown in the aspect of FIG. **3**, slots **38** also may be provided through the covers **32**, **34**. The from and back covers **32**, **34** define convex top and bottom crown edges **40**, **41**. The covers **32**, **34** are generally rectangular with the lateral edges **42**, **43** being slightly longer than the convex crown edges **40**, **41**.

A dividing wall **44** extends substantially perpendicular, and substantially centered, between the generally rectangular front and back covers **32**, **34**, thereby connecting the covers **32**, **34**. As best shown in FIG. **6** and **9**, the inner surface of each of the covers **32**, **34** defines one or two notches **46** which extend from the edges **42**, **43** to the dividing wall **44** at the center of the covers **32**, **34**. The purpose of the notches **46** will be made clear below.

Referring now to FIGS. **9** and **11**, the dividing wall **44** defines an aperture **38** for mounting an externally threaded core member **50** therethrough. The externally threaded core member **50** defines a substantially centered flange **52** extending from a non threaded area **54**. The diameter of the flange **52** is larger than the diameter of the aperture **38** thereby serving as a stop to prevent the core member **50** from passing all the way through the aperture **38**. The threads **56** on one half of the core member **50** are oppositely wound from the **58** threads on the remaining half of the core member **50**. As best shown in FIG. **6**, one end of the core member **50** defines a hex shaped aperture **60**. The purpose of the aperture **60** will be made clear below.

Referring now to FIGS. **3**, **6**, and **10A**, **10B**, a pair of internally threaded nut assemblies **70** are threaded onto the core member **50** and serve as movable side walls that retract inside the front and back covers **32**, **34** of the spinal fixator **20**. Each nut assembly **70** defines a planar end wall **72**. Extending inwardly at an angle from both the top and the bottom edge of the each of the end walls **72** is a pair of parallel arms **74**. Each pair of arms **74** defines a channel **76** with angled, locking side walls **78**.

Four crown members **90** are slidably mounted within the four channels **76**. Each crown member defines a curved flange **92** which is slidingly engaged in the channel **76** between the paired arms **74**. The crown member **92** slides within the channel **76** as the nut assembly **70** moves inwardly or outwardly in response to rotation of the core member **50**. The crown members **90** are secured within the fixator by angled edges **94** which engage under and are locked within angled walls **78**. Additionally, the crown members **90** are secured by engagement of edges **96** in notches **46**. The notches **46** prevent the crown members from rattling against the housing **30** and the nut assemblies **70**. Three, substantially equally spaced, conical teeth **98** extend outwardly from the top of each crown member **90**. As best shown in FIG. **2**, the teeth **98** extend at an angle "A" of approximately 6 degrees from midline "M". It will be recognized by those skilled in the art that the teeth may have other configurations, spacing, and angles; and, that the teeth

need not be angled. Angled teeth are preferred to better secure the fixator **20** to the vertebrae **4**, particularly to prevent the teeth **98** from loosening, or being dislodged, during spinal extension or flexure.

Referring now to FIGS. **1–2**, and **12–13**, the spinal fixator **20** is inserted within the concavities between adjacent vertebrae bodies **4** with the patient in an anterio-lateral position, and the fixator **20** in the retracted position shown in FIG. **12**. To achieve the retracted position shown in FIG. **12**, the core member **50** is rotated to cause the nut assemblies **70** to move outwardly to extend slightly beyond housing walls **42**, **43**, as shown in FIG. **12**, and the crowns slide downwardly in the channels **76** to rest against the dividing wall **44**. In the fully retracted position, the teeth **98** are inside of the housing **30**, below and above, respectively, the crown edges **40**, **41**, thereby preventing scraping of the teeth **98** against the vertebral body **4**.

A conventional, hollow insertion tool **100** is used to gasp a nut assembly **70** to insert the retracted spinal fixator **20** between the two vertebrae bodies **4**. Following placement as in FIG. **1**, a tool **102** having a terminus defining a hex configuration is inserted through the insertion tool **100** to engage in aperture **60** in the core member **50**. The tool **102** is used to rotate core member **50** to extend the crowns **90** outwardly thereby forcing the teeth **98** into the vertebral body **4**. As shown in FIG. **13**, rotation of the core member **50** by the tool **102** causes the nut assemblies **70** to retract inside the housing. Retraction of the nut assemblies **70** forces the teeth **98** upward as the flanges **92** slide within the channels **76**. As the four separate crown members **90** extend outwardly, the teeth **98** penetrate the vertebral bodies **4**. It will be recognized by those skilled in the art that the provision of four, separate crown members **90** enables the fixator **20** to better conform to the contours of the vertebrae. Outward movement of a single crown member **90** may be halted following complete penetration by the teeth **98**, and others of the crown members **90** may be further extended upon further rotation of the core member if all of the teeth have not yet penetrated, or fully penetrated the vertebrae. Provision of a plurality of separate crown members enables the fixator to better conform to the anatomy of the vertebrae thereby further securing its position without the need for plates and/or screws. Following placement, the contoured housing, particularly the convex edges **40**, **41** follow the contour of the concave vertebral bodies **4**, and the bony edges of the vertebral bodies **4** cup the fixator **20**.

It is preferred to pack an bone graft, autograft or autograft, around the fixator **20**. The openings **36** in the covers **32**, **34** permit bony ingrowth of the graft to further secure the position of the fixator **20**.

The spinal fixator of the present invention may be made in various sizes to accommodate differing spinal configurations, in particular, to accommodate the smaller spaces between vertebrae typically encountered in children. Heights of preferred retracted fixators of differing sizes vary from approximately 0.75 to 2.0 inches. Heights of fully extended preferred fixators of differing sizes vary from approximately 1.0 to 2.65 inches. Thicknesses of fixators of differing sizes vary from approximately 0.5 to 1.25 inches.

As shown in FIG. **3** in another aspect of the present invention, the covers **32**, **34** may define slots **38** for engagement of posts **95** on the crowns **90**. In this aspect, the posts **95** prevent the crowns **90** from falling out of the fixator **20** thereby eliminating the need for the mating geometries between the channel edges **78** and the flange **92**.

To those skilled in the art to which the present invention pertains, many widely varying embodiments and implementations of the principles of the present invention will be suggested from the foregoing. For instance, the fixator may be used to immobilize other bones besides vertebrae. Accordingly, the contours of the housing may be changed to conform to the contours of other bones. Additionally, any number of teeth may be provided on the crown portions as desired, and fewer or more crown members may be provided. The description and the disclosures present herein are by way of illustration only and should not be considered to limit the present invention, the scope of which is more particularly set forth in the following claims.

What is claimed is:

1. A bone immobilization device for connecting bone to bone comprising:

housing means defining a perimeter;

at least two, separate crown means mounted inside the perimeter of the housing means, each crown means defining at least one outwardly extending tooth means; and

means including a core member extending through the housing means and having nut means movably attached to external threads thereon for retracting the at least two, separate crown means inside the perimeter and for extending the at least two, separate crown means outside the perimeter, the at least one tooth means adapted to penetrate bone.

2. The immobilization device of claim **1** wherein the nut means comprises means for mounting the at least two separate crown means, rotation of the core member causing the nut means to move on the external threads to retract into the housing means and move the at least two separate crown means beyond the perimeter, further rotation of the core member causing the nut means to move on the external threads beyond the perimeter to allow the at least two separate crown means to retract inside the perimeter.

3. The immobilization device of claim **2** wherein the external threads on the core member are separated into two, oppositely wound portions, and the core member defines an aperture for insertion of a tool for rotation of the core member.

* * * * *