CERTIFICATE OF TRANSLATION ACCURACY

I, Idlir Shkurti, declare:

1. I am a native speaker of English and am well versed in both the German and English languages. I have over 20 years of experience translating various German legal documents into English on a full time basis.
2. The following translation of the corresponding source text from German into English is accurate and complete to the best of my knowledge.

I declare that all statements made herein of my own knowledge are true and that all statements made on information and belief are believed to be true; and further that these statements were made with the knowledge that willful false statements and the like so made are punishable by fine or imprisonment, or both, under Section 1001 of Title 18 of the United States Code and may jeopardize the validity of the application or any patent issuing thereon.

I declare under penalty of perjury under the laws of the United States of America that the foregoing is true and correct.

Executed on May 29, 2024, in Tirana, Albania.

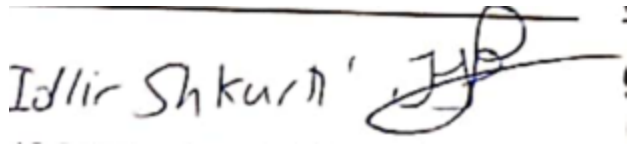

Idlir Shkurti

(12) INTERNATIONAL APPLICATION PUBLISHED UNDER THE TREATY ON INTERNATIONAL CO-OPERATION IN THE AREA OF PATENTS (PCT)

(19) World Intellectual Property Organization
International Bureau

(43) International publication date
April 10, 2008 (04/10/2008)

PCT

(10) International Publication Number
WO 2008/040323 A2

(51) International patent classification
H01L 51/52 (2006.01)
(21) International reference number: PCT/DE2007/001744
(22) International application date:
September 26, 2007 (09/26/2007)

(25) Submission language: German
(26) Publishing language: German

(30) Priority information:
102006046293.9
September 29, 2006 (09/29/2006) DE
102006046198.3
September 29, 2006 (09/29/2006) DE
102006054584.2
November 2006 (11/20/2006) DE
102006060781.3
December 21, 2006 (12/21/2006) DE

(71) Applicant *(for all countries of destination with the exception of the US):* **OSRAM OPTO SEMICONDUCTORS GMBH** [DE/DE]; Wernerwerkstrasse 2, 93049 Regensburg (DE).

(72) Inventor; and
(75) Inventor/Applicant (*only for the US):* **DIEKMANN, Karsten** [DE/DE]; Fasanenstrasse 13, 94371 Rattenberg (DE). **HEUSER, Karsten** [DE/DE]; Georg-Frank-Strasse 17, 91056 Erlangen (DE). **KLEIN, Markus** [DE/DE]; Bienenweg 26, 93105 Tegernheim (DE). **LANG, Dieter** [DE/DE]; Rosenstrasse 14, 83052 Bruckmühl (DE). **LECHERMANN, Georg** [GE/GE]; Walserstrasse 3d, 82377 Penzberg (DE). **REITHMEIER, Michael** [DE/DE]; Winterstrasse 29, 82223 Eichenau (DE). **PLUMEYER, Carsten** [DE/DE]; Angerbauerstrasse 4, 82152 Martinsried (DE). **CHIPALKATTI, Makarand** [IN/US]; 6 Fiske Rd, Lexington, Massachusetts 02420 (US). **CUSTODIS, Udo** [DE/CN]; Flat 1801, Block 74, 74 Kennedy Road, Bamboo Grove, Wanchai, Hong Kong (CN). **SEYMOUR, Diane** [US/US]; R.R. #1, Box 206, Towanda, Pennsylvania 18848 (US). **POPLAVSKYY, Dmytro** [UA/US]; 1546 Maurice Lane, #41, San Jose, California 95129 (US).

(74) Lawyer: EPPING HERMANN FISCHER PATENTANWALTSGESELLSCHAFT MBH; Ridlerstrasse 55, 80339 Munich (DE).

(81) Countries of destination *(unless otherwise indicated, for each available national type of protection):* AE, AG, AL, AM, AT, AU, AZ, BA, BB, BG, BH, BR, BW, BY, BZ, CA, CH, CN, CO, CR, CU, CZ, DK, DM, DO, DZ, EC, EE, EG, ES, FI, GB, GD, GE, GH, GM, GT, HN, HR, HU, ID, IL, IN, IS, JP, KE, KG, KM, KN, KP, KR, KZ, LA, LC, LK,

[Continued on next page]

(54) Title: ORGANIC LIGHTING DEVICE AND LIGHTING EQUIPMENT

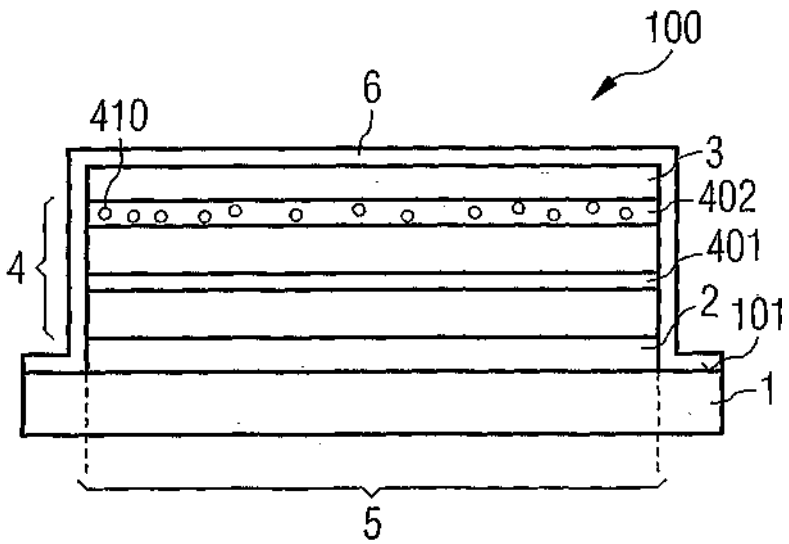

(57) Abstract:
The invention relates to an organic lighting device and lighting equipment comprising said lighting device. The invention also relates to an optical display device, an emergency lighting system, an automotive interior lighting system, a piece of furniture, a structural material, a glazing pane and a display comprising said lighting device or a lighting equipment having said lighting device.

WO 2008/040323 A2

LR, LS, LT, LU, LY, MA, MD, ME, MG, MK, MN, MW, MX, MY, MZ, NA, NG, NI, NO, NZ, OM, PG, PH, PL, PT, RO, RS, RU, SC, SD, SE, SG, SK, SL, SM, SV, SY, TJ, TM, TN, TR, TT, TZ, UA, UG, US, UZ, VC, VN, ZA, ZM, ZW.

(84) Countries of destination *(unless otherwise indicated, for each available national type of protection):* ARIPO (BW, GH, GM, KE, LS, MW, MZ, NA, SD, SL, SZ, TZ, UG, ZM, ZW), Eurasian (AM, AZ, BY, KG, KZ, MD, RU, TJ, TM), European (AT, BE, BG, CH, CY, CZ, DE, DK, EE, ES, FI, FR, GB, GR, HU, IE, IS, IT, LT, LU, LV, MC, MT, NL, PL, PT, RO, SE, SI, SK, TR), OAPI (BF, BJ, CF, CG, CI, CM, GA, GN, GQ, GW, ML, MR, NE, SN, TD, TG).

Published:

— *without international search report and to be republished after receipt of the report*

Description

Organic lighting device and lighting equipment

The present application relates to an organic lighting device and lighting equipment with such a lighting device. Furthermore, the present application relates to an optical display device, emergency lighting, interior vehicle lighting, a piece of furniture, a building material, glazing and a display with such a lighting device or with lighting equipment which has such a lighting device.

Publications US 6,554,443 and US 6,626,554 describe a lighting device which has semiconductor-based light-emitting diodes as light sources.

However, semiconductor-based light-emitting diodes are generally relatively expensive. In particular, the cost of a semiconductor-based light-emitting diode increases with its luminous area. Large-area semiconductor-based light-emitting diodes are therefore particularly expensive and are rarely produced due to their low profitability. Furthermore, semiconductor-based light-emitting diodes are generally neither flexible nor permeable to visible light.

One of the tasks of the present invention is to provide a low-cost lighting device.

A further object of the present invention is, inter alia, to provide a lighting device which is transparent to visible light.

A further purpose of the present invention is, inter alia, to provide a lighting device which is suitable for displaying information, for example in public spaces.

A further purpose of the present invention is, inter alia, to provide a light source which can be used as glazing in public spaces or in pieces of furniture, for example, and which can also serve as lighting.

A further purpose of the present invention is, inter alia, to provide a lighting device which can serve as a mirror and/or as an illumination source.

A further purpose of the present invention is, inter alia, to provide a light source which is suitable for displaying information, for example in motor vehicles.

A further purpose of the present invention is, inter alia, to provide a lighting device which can be used in a decorative element.

A further purpose of the present invention is, inter alia, to provide a lighting device for a search mirror.

A further purpose of the present invention is, inter alia, to provide a flexible lighting device.

A further purpose of the present invention is, inter alia, to provide lighting equipment with a lighting device.

A further purpose of the present invention is, inter alia, to provide lighting equipment with a lighting device whose light can cause a variable color impression.

At least one purpose of certain embodiments of the present invention is, inter alia, to provide a piece of storage furniture with a storage element comprising a lighting device. This can, for example, enable an area of the piece of storage furniture and its surroundings to be illuminated.

According to at least one embodiment of the lighting device, a lighting device comprises in particular:
- a substrate with a first main surface to which a first electrode is applied,
- a second electrode, and
- an organic layer stack within an active region of the substrate between the first and second electrodes, the organic layer stack comprising at least one organic layer capable of generating light.

The organic layers of the organic layer stack can contain low molecular weight materials (small molecules) or polymeric materials. Low-molecular weight materials are usually applied by vacuum processes such as evaporation, while polymeric materials can be applied by solvent-based processes such as scraping, spin-coating or printing.

One of the electrodes usually serves as an anode, which injects holes into the organic layer stack, while the other electrode serves as a cathode, which injects electrons into the organic layer stack. The anode preferably has a material that has a high work function for electrons, such as indium tin oxide (ITO).

The cathode, on the other hand, preferably has a material that has a low work function for electrons, such as alkali metals or alkaline earth metals. Since such materials are generally very sensitive to atmospheric gases - such as oxygen and moisture - the cathode can comprise one or more additional

layers that are significantly less sensitive to environmental influences, such as silver, aluminum or platinum layers, in addition to a layer of such a material with a low work function. The other layers encapsulate the layer with the low work function for electrons.

In addition to the at least one layer capable of generating light, the organic layer stack may comprise further organic layers, such as a hole-injecting layer, a hole-conducting layer, an electron-injecting layer and an electron-conducting layer.

The hole-conducting layer and the hole-injecting layer are preferably located on the side of the organic layer stack facing the anode, while the electron-conducting layer and the electron-injecting layer are preferably located on the side of the organic layer stack facing the cathode. The organic layer, which is suitable for generating light, is preferably arranged between the hole-conducting layer and the hole-injecting layer on one side and the electron-conducting layer and the electron-injecting layer on the other side. As a rule, the organic materials are translucent, in particular for light emitted by the organic layer stack.

For example, the hole-injecting layer contains or consists of at least one of the following materials:

- Pedot:PSS
- F4TCNQ (tetrafluorotetracyano-quinodimethane), p-doped
- NHT-5 with NDP-2.

For example, the hole-conducting layer contains or consists of at least one of the following materials:

- aNPD=aNPB= 4,4'-bis[N-(1-naphtyl)-N-phenyl-amino] biphenyl
- 1-TNATA = 4,4',4''-Tris(N-(naphth-l-yl)-N-phenyl-amino)triphenylamin

- MTDATA = 4,4',4''-Tris(N-3methylphenyl-N-phenyl-amino)triphenylamin
- TPD = N,N'-diphenyl-N,N'-(3-methylphenyl)-1,1'-biphenyl-4,4'-diamin
- spTAD = 2,2',7,7'-diphenylamino-spiro-9,9'-biflouren.

For example, the electron-conducting layer contains or consists of at least one of the following materials:
- Alq3 = Tris(8-hydroxychinolin)aluminium
- BAlq = Bis-(2-methyl-8-chinolinolate)-4-(phenylphenolato)aluminium
- TPBi = 1,3,5-Tris-(l-phenyl-lH-benzimidazol-2-yl)-benzol.

For example, the electron injecting layer contains or consists of at least one of the following materials:
- LiF, NaF
- Cs2CO3
- Ba
- NET-5 with NDN-1.

The lighting device usually has two main surfaces that face each other. The main surface of the lighting device facing away from the substrate is referred to below as the "top" of the lighting device, while the main surface opposite the top of the lighting device is referred to as the "bottom" of the lighting device.

The lighting device emits a light generated in the organic layer stack either through its bottom side or through its top side or through the bottom side and top side. In any case, the elements of the lighting device through which the light generated in the organic layer stack passes on its way to the respective light-emitting side - top side or bottom side - of the lighting device must be permeable to the light generated by the organic layer stack. If the light generated in the

organic layer stack is intended to be emitted from the bottom and top of the lighting device, all elements of the lighting device, in particular the electrodes, as well as an encapsulation and the substrate, must generally be permeable to the light generated by the organic layer stack. In the present case, an element is also referred to as "translucent" if it is at least permeable to the light generated by the organic layer stack.

According to at least one embodiment of the lighting device, the first electrode is permeable to light emitted by the organic layer stack during operation.

If only the first electrode is permeable to light generated by the organic layer stack during operation, while the second electrode is not, the light is generally intended to be emitted through the bottom of the lighting device. In this case, it is therefore preferable for at least the substrate to also be permeable to the light generated by the organic layer stack.

Suitable materials for a substrate that is transparent to the light emitted by the organic layer stack include glass or plastics such as polyethylene terephthalate (PET), polybutylene terephthalate (PBT), polyethylene naphthalate (PEN), polycarbonate (PC), polyimide (PI), polysulfone (PSO), polyphenylene ether sulfone (PES), polyethylene (PE), polypropylene (PP), polyvinyl chloride (PVC), polystyrene (PS) and polymethyl methacrylate (PMMA), polyamide (PA), polyurethane (PUR), as well as rubbers.

Furthermore, a laminate of a glass and at least one of the above-mentioned plastics is suitable as a substrate which is transparent to the light emitted by the organic layer stack.

According to at least one further embodiment of the lighting device, the second electrode is permeable to light emitted by the organic layer stack during operation. If only the second electrode is permeable to light generated by the organic layer stack during operation, but the first electrode is not, the light is generally intended to be emitted through the top of the lighting device. In this case, it is therefore preferable for the elements between the second electrode and the top surface - for example an encapsulation - to also be permeable to the light generated by the organic layer stack.

According to at least one particularly preferred embodiment of the lighting device, both electrodes are designed to be permeable to the light generated by the layer stack. In this embodiment, the lighting device is generally intended to be permeable to the light emitted by the organic layer stack. As already mentioned above, in this case the other elements of the lighting device through which the light passes on its way to the top or bottom of the lighting device, in particular the substrate and an encapsulation, are also designed to be permeable to the light emitted by the organic layer stack.

According to at least one embodiment, at least one of the electrodes comprises or consists of a transparent conductive oxide, a metal or a conductive organic material.

Transparent conductive oxides (TCOs) are conductive materials, usually metal oxides such as zinc oxide, tin oxide, cadmium oxide, titanium oxide, indium oxide or indium tin oxide (ITO), which are transparent to visible light. They are therefore particularly suitable for use in electrodes that are transparent to the light emitted by the organic layer stack. ITO, for example, is a suitable anode material. In addition to binary metal-oxygen compounds such as ZnO, SnO2 or In2O3, ternary metal-oxygen compounds such as ZnO:Al (ZAO), Zn_2SnO_4,

$CdSnO_3$, $ZnSnO_3$, $MgIn_2O_4$, $GaInO_3$, $Zn_2In_2O_5$ or $In_4Sn_3I_{12}$ or mixtures of different transparent conductive oxides also belong to the group of TCOs. Furthermore, the TCOs do not necessarily correspond to a stoichiometric composition and can also be p- or n-doped.

Alkali or alkaline earth metals, for example, can be used as the metal for the cathode. The TCO materials listed above are also suitable for forming the cathode.

The electrode can, for example, have a metallic layer or consist of such a layer. If the electrode, which has the metallic layer or consists of such a layer, is to be permeable to the light emitted by the organic layer stack, the metallic layer must be sufficiently thin. Preferably, the thickness of such a semi-transparent metallic layer is between 1 nm and 100 nm, inclusive.

PEDOT:PSS, for example, is a suitable organic conductive material for an electrode and is particularly suitable for the anode. Other suitable organic conductive materials include polythiophene or pentacene.

Organic materials are generally permeable to visible light. Therefore, an electrode comprising or consisting of organic conductive material is also generally transparent to the light emitted by the organic layer stack.

According to at least one embodiment of the lighting device, at least one of the electrodes has electrically conductive tracks. The electrically conductive tracks preferably have a metal or consist of such a metal. The electrical tracks are particularly preferably relatively thick, for example in comparison with a semi-transparent metallic layer described above. Preferably, the thickness of the metallic tracks is at

most 1.5 µm. Such thick electrically conductive tracks generally have good electrical conductivity, so that they are particularly suitable for imprinting charge carriers into the organic layer stack. Furthermore, the metallic tracks are preferably formed in such a way that they only fill a small part of the area of the electrode surrounding them. For example, the electrically conductive tracks are designed as a grid that is permeable to the light emitted by the organic layer stack. In this way, the electrically conductive tracks can be used to create an electrode which is permeable to the light emitted by the organic layer stack and which also advantageously allows good charge carrier imprinting in the organic layer stack.

Preferably, the proportion of metallic tracks on the total electrode surface is a maximum of 25%, preferably a maximum of 10%, particularly preferably a maximum of 5%. The metallic tracks are then no longer or only barely perceptible to an observer.

It is particularly preferable for the electrically conductive tracks to have a multilayer structure. Such a multilayer structure can, for example, have several metallic layers. Preferably, the multilayer structure comprises or consists of three metallic layers, of which the two outer layers serve as protective layers for the middle layer, for example against corrosion. The middle layer of the multilayer structure can, for example, comprise aluminum or consist of aluminum, while the two outer layers can comprise chromium, molybdenum, copper or silver or consist of one of these materials.

The multilayer structure preferably has a thickness of at least 50 nm and at most 100 nm.

The materials mentioned are particularly suitable for electrodes with poor conductivity. For example, for electrodes that contain or consist of a TCO. In principle, the materials are suitable for the anode and cathode.

According to at least one embodiment of the lighting device, the organic layer stack comprises a doped organic layer with a dopant, which is arranged between the at least one organic layer suitable for generating light and one of the electrodes. Particularly preferably, the doped organic layer forms an outermost layer of the organic layer stack, which particularly preferably forms a common interface with the respective electrode facing it. The doped organic layer can be an n-doped layer or a p-doped layer. If the doped layer is arranged so that it faces the cathode or is adjacent to the cathode, it is generally an n-doped layer. If, on the other hand, the doped layer is arranged so that it faces the anode or is adjacent to it, it is generally a p-doped layer.

Preferably, the dopant of the doped layer is as large as possible atoms or molecules, which in the case of an n-dopant are suitable for emitting electrons and in the case of a p-dopant are suitable for emitting holes. Furthermore, the dopant preferably has a low diffusion constant within the organic layer stack, as is usually the case with large atoms or molecules, for example.

On the one hand, doping advantageously increases the conductivity of the doped organic layer and, in the case of an n-doped layer adjacent to the cathode, leads to better injection of electrons from the cathode into the organic layer stack or, in the case of a p-doped layer adjacent to the anode, to better hole injection from the anode into the organic layer stack. Preferred n-dopants are cesium, barium and lithium fluoride. The following materials, for example,

are suitable as p-dopants: F4TCNQ, HIL from Mitsubishi (MCC-PC1.020).

According to at least one embodiment of the lighting device, the active area is arranged within an encapsulation. Since the organic materials of the organic layer stack and often also electrode materials, in particular materials of the electron-injecting cathode, are reactive to atmospheric gases, such as moisture and oxygen, it is usually particularly important for the service life of the lighting device to be well sealed against oxygen and moisture as well as other atmospheric gases, usually by means of encapsulation. The active area in particular, which comprises the organic layer stack and the electrodes, must generally be protected here.

The encapsulation can be, for example, a cap which has a cavity in the area of the active layer stack and which is mounted on the substrate within a mounting area of the substrate surrounding the active area, for example by bonding. The cavity of the cap preferably forms a cavity above the active area where the organic layer stack and the two electrodes are arranged. Furthermore, the bottom of the cap's cavity is preferably not in direct contact with the second electrode on the organic layer stack.

Furthermore, a plate can also serve as encapsulation, which is connected to the substrate within an attachment area of the substrate surrounding the active area, for example by bonding. Such a plate can be arranged in direct contact with the second electrode. For example, the plate can be attached to the second electrode by means of an adhesive layer.

In order to create a gap between the cap or the plate such that the cap or the plate is not in direct contact with the second electrode, the active area includes spacers according

to one embodiment. The spacers may, for example, be spherical particles arranged on the organic layer stack or the second electrode.

Furthermore, a foil can also serve as encapsulation. The foil can be bonded to the substrate within an attachment area of the substrate surrounding the active area - for example by adhesive bonding. Such a foil can be arranged in direct contact with the second electrode. For example, the foil can be attached to the second electrode by means of an adhesive layer.

In order to create a distance between the foil and the second electrode or the organic layer stack in such a way that the foil is not in direct contact with the second electrode, the active area includes spacers according to one embodiment. The spacers may, for example, be spherical particles that are arranged on the organic layer stack or the second electrode.

The foil is formed, for example, from a transparent plastic or a glass. Preferably, the foil has a thickness of at most 1 mm, particularly preferably of at most 0.5 mm.

Furthermore, the encapsulation can also be a laminate comprising at least one layer of glass to which at least one layer of plastic is applied.

Preferably, the two main surfaces of the glass layer are each covered by a plastic layer. The laminate is then a plastic-glass-plastic laminate.

The laminate can be bonded to the substrate within an attachment area of the substrate surrounding the active area, for example by adhesive bonding. Such a laminate can be arranged in direct contact with the second electrode. For

example, the laminate can be attached to the second electrode by means of an adhesive layer.

In order to create a distance between the laminate and the second electrode or the organic layer stack in such a way that the laminate is not in direct contact with the second electrode, the active area comprises spacers according to one embodiment. The spacers may, for example, be spherical particles arranged on the organic layer stack or the second electrode.

According to at least one embodiment, the encapsulation is formed by a thin-film encapsulation. The thin-film encapsulation has at least one barrier layer. The barrier layer is intended to protect the organic layer stack and sensitive electrode materials from the penetration of harmful substances, such as moisture and oxygen.

A thin film encapsulation further comprises at least one thin film layer, such as the barrier layer, which is applied by means of a thin film process, such as sputtering, evaporation, and plasma-enhanced CVD (short for "chemical vapor deposition"), ALD (short for "atomic layer deposition"), MOVPE (short for "metal organic vapor phase epitaxy"), flash evaporation, and/or laser ablation. Such thin film layers preferably have a thickness of between 0.5 and 5 µm, inclusive.

A thin-film encapsulation can, for example, be applied directly to the second electrode. A thin-film encapsulation generally offers the advantage of being particularly thin and space-saving compared to a cap or a plate.

According to at least one embodiment, the barrier layer contains or consists of one of the following materials:

silicon oxide, silicon nitride. These materials are particularly suitable for forming a barrier against external influences, such as the penetration of oxygen and moisture.

According to at least one embodiment, the thin film encapsulation comprises multiple alternating barrier layers, wherein at least two barrier layers different in terms of their material composition are arranged in regular succession. In other words, in this embodiment, the thin-film encapsulation comprises first and second barrier layers, wherein the material composition of the first barrier layers is different from the material composition of the second barrier layers. The first barrier layers may, for example, comprise silicon oxide or consist of this material and the second barrier layers may, for example, comprise silicon nitride or consist of this material. The first and second barrier layers are also arranged alternately in terms of their material composition.

Such an alternating layer sequence of barrier layers within the thin film encapsulation offers the advantage that the thin film encapsulation is particularly dense. This is usually due to the fact that pinholes - i.e. small holes - that can occur in the respective barrier layer when it is applied can be covered by the overlying barrier layer or even filled by its material. Furthermore, the probability that a pinhole from one barrier layer will form a continuous connection with a pinhole from the neighboring barrier layer is extremely low. This applies in particular to barrier layers that are arranged alternately in terms of their material composition.

One of the alternating barrier layers is particularly preferably silicon oxide and the other alternating barrier layer is silicon nitride.

According to at least one further embodiment, the thin-film encapsulation comprises at least one intermediate polymer layer arranged between two barrier layers.

Multicomponent resin systems, for example, are suitable for the intermediate polymer layer, and are vapor-deposited as monomers and are deposited in liquid form. This achieves high planarity of the polymer interlayer. The deposited layer is then cross-linked using UV radiation.

The task of the polymer interlayer is to planarize the thin film encapsulation in order to prevent pinholes from overlapping in the alternating inorganic barrier layers. This reduces the water and oxygen permeability of the thin film encapsulation.

The thickness of the polymer interlayer can preferably be between 50 and 100 nm, inclusive. Particularly preferably, the polymer interlayer is light transmissive if a top emitter is present or transparency of the lighting device is required.

The thin-film encapsulation particularly preferably comprises a protective lacquer layer as the outermost layer. The protective lacquer layer can be applied to the thin-film encapsulation using a spraying process with a masking process, for example.

Alternatively, for example, an epoxy resin film can be bonded to the thin film encapsulation as a protective coating layer. In this case, the protective lacquer layer also contributes in particular to waterproofing. Thin glass can be laminated onto the epoxy resin film to further improve the watertightness.

According to a further embodiment, an adhesion-promoting layer, which is preferably also a thin-film layer, is arranged

between the thin-film encapsulation and the second electrode. The purpose of the adhesion-promoting layer is to improve the adhesion of the thin-film encapsulation to the second electrode or to any other layer that may be applied to the second electrode. For this purpose, the adhesion-promoting layer has, for example, sulfur and/or nitrogen atoms or sulfur and/or nitrogen compounds. It is also possible that the adhesion-promoting layer contains, for example, aluminum oxide or consists of aluminum oxide.

According to at least one further embodiment, an organic planarization layer is arranged between the second electrode and the thin-film encapsulation.

Multi-component resin systems, for example, are suitable for the organic planarization layer, which are vapor-deposited as monomers and are deposited in liquid form. This achieves high planarity of the organic planarization layer. The deposited layer is then cross-linked using UV radiation. The task of the organic planarization layer is to planarize the thin film encapsulation in order to prevent pinholes from overlapping in the alternating inorganic barrier layers. This reduces the water and oxygen permeability of the thin film encapsulation. The thickness of the organic planarization layer can preferably be between 50 and 100 nm, inclusive.

If an adhesion-promoting layer is arranged between the second electrode and the thin-film encapsulation, the organic planarization layer is preferably arranged between the adhesion-promoting layer and the second electrode, the adhesion-promoting layer being intended to improve the adhesion between the planarization layer and the thin-film encapsulation.

The organic planarization layer can, for example, have scattering centers such as diffuser particles, e.g. silica spheres. In addition to silica spheres, other translucent materials that have a different refractive index than the surrounding matrix, such as glass spheres, are also suitable.

The diffuser particles are intended to scatter light, for example to blur lateral structures of the OLED layer structure - which can occur due to the electrode design, for example - in order to create a homogeneous impression for the viewer. Furthermore, the radiation characteristics can be influenced by the light scattering.

The diffuser particles preferably have a diameter of at least 0.5 to at most 5 µm. The thickness of the surrounding layers is preferably adapted accordingly so that the diffuser particles are embedded in the layers.

If a lighting device which is essentially transparent to the light emitted by the organic layer stack during operation or a lighting device which emits light from its upper side is to be created, the encapsulation is preferably also designed to be transparent to the light emitted by the lighting device during operation.

According to at least one embodiment, the encapsulation comprises glass or consists of glass. Such an encapsulation is generally transparent to the light emitted by the organic layer stack. In particular, a glass cap or a glass plate can be used as the encapsulation, which is transparent to the light generated by the organic layer stack.

According to at least one embodiment, the organic planarization layer contains a luminescence conversion material.

The luminescence conversion material partially converts, for example, blue light into yellow light, which then produces a white mixed light that is emitted by the lighting device. Embedding the luminescence conversion material in the planarization layer or other functional layers such as the encapsulation or the substrate proves to be particularly advantageous, as this allows process steps to be saved during manufacture. This makes production particularly cost-effective.

Luminescence conversion materials are materials that absorb incident light of a first wavelength range and emit light of a second wavelength range different from the first, which generally comprises longer wavelengths than the first wavelength range.

Organic materials such as perylene phosphors can be used as luminescence conversion materials. Other organic materials that can also be used for dye lasers in the corresponding wavelength range, for example, are suitable as luminescence conversion materials.

Luminescence conversion materials whose molecules contain an aromatic system and preferably conjugated double bonds are also suitable. The basic structure of these luminescence conversion materials is formed, for example, from chromium, xanthene, coumarin, thioindole and/or benzene.
The following materials are particularly suitable: rhodamine 6G, DCM = 4-(dicyanomethylene)-2-methyl-6-(p-dimethylamino-styryl)-4H-pyran.

In particular, molecules with an abnormal stokes shift are desired, which causes a reduced or no overlap of the areas of luminescence and the exciting radiation. So-called triplet emitters are also suitable, as there is no overlap between

exciting radiation and luminescence. Another positive effect of triplet emitters is that absorption losses are avoided; rhodamine B, for example, is particularly suitable here.

Furthermore, the following inorganic materials are also suitable for use as luminescence conversion materials: garnets doped with rare-earth metals, alkaline earth sulfides doped with rare-earth metals, thiogallates doped with rare-earth metals, aluminates doped with rare-earth metals, orthosilicates doped with rare-earth metals, chlorosilicates doped with rare-earth metals, alkaline earth silicon nitrides doped with rare-earth metals, oxynitrides doped with rare-earth metals and aluminum oxynitrides doped with rare-earth metals.

According to at least one further embodiment, the lighting device comprises a getter material. The getter material is advantageously suitable for binding moisture and/or oxygen. Getter materials can be BaO, CaO, zeolite, aluminum alkoxy compounds and barium, for example.

The getter material can be arranged inside the active area, for example. Alternatively, the getter material can also be arranged outside the active area. For example, the getter material can surround the active area and be arranged in a ring around the active area between the substrate and the encapsulation. In this way, the penetration of harmful substances through the getter material can be prevented particularly effectively.

Furthermore, when using a cap or a plate for encapsulation, a getter material can also be applied to the side of the cap or plate facing the active layer stack. If a lighting device is to be produced that is essentially permeable to the light generated by the organic layer stack, the getter material is

also preferably permeable to the light generated by the organic layer stack. Al-alkoxy compounds, for example, are suitable getter materials for this purpose.

If the lighting device comprises an encapsulation that prevents the penetration of harmful substances into the lighting device particularly well, as is the case with a thin-film encapsulation, for example, the lighting device is preferably free of any getter material.

According to at least one embodiment, the lighting device comprises an electrical supply line on the substrate, which connects one of the electrodes and a connection point, preferably located outside the active area, in an electrically conductive manner. Preferably, the lighting device is electrically contacted via the connection point, for example using a plug.

According to at least one embodiment, the electrical supply line is permeable to the light emitted by the layer stack. Such a supply line is particularly suitable for use in a lighting device that is completely permeable to the light emitted by the layer stack.

The electrical supply line can, for example, contain or consist of a metal. If the electrical supply line is to be transparent to the light emitted by the layer stack, the metal is applied so thinly that a semi-transparent metal layer is created which is transparent to light from the organic layer stack.

Furthermore, the electrical supply line of the lighting device can also contain or consist of a transparent conductive oxide. Since transparent conductive oxides are permeable to visible light, such an electrical supply line is generally also

permeable to the light emitted by the layer stack and preferably to external visible light.

According to at least one embodiment, the lighting device is essentially permeable to the light generated by the organic layer stack. In this case, the lighting device is intended to emit the light generated by the organic layer stack from its upper side and from its lower side. Furthermore, the lighting device in this case is preferably designed in such a way that it is highly transparent to visible external light when switched off and does not include any elements that absorb or reflect large amounts of visible light. In this case, the lighting device is only poorly perceptible to an observer when switched off. This means that the lighting device is preferably clearly transparent and not diffusely scattering.

If the lighting device is permeable to the light emitted by the organic layer stack, the elements of the lighting device, such as the organic layer stack, the electrodes, the substrate, the encapsulation, possibly the getter material and the leads, are also permeable to the light generated by the organic layer stack, particularly preferably permeable to visible light.

According to at least one embodiment of the lighting device, a window glazing serves as the substrate. This can be particularly advantageous if the lighting device is designed to be permeable to the light generated by the organic layer stack.

A lighting device that is permeable to the light generated by the organic layer stack can be integrated into a window, a ceiling element, a windshield, a door, a room divider, a glass block, a wall or a partition and can be used, for example, in buildings, furniture, motor vehicles or aircraft.

According to a further embodiment, a window glazing serves as encapsulation.

The substrate and encapsulation are particularly preferably designed as window glazing. In this embodiment, the lighting device, which is preferably designed to be transparent to the light emitted by the organic layer stack, or a lighting device with such a lighting device, can be integrated as simply as possible as glazing in a glass pane.

Glass panes with a lighting device that is at least permeable to light emitted by the organic layer stack or an illuminating device with such a lighting device can be used, for example, to display signals in hotel doors, at trade fairs or museums. This allows information to be displayed by the lighting device as required. In this way, stickers, for example on doors, can be advantageously avoided. Furthermore, the illuminated information provided by the lighting device has a much better signaling effect than a sticker.

Furthermore, with the help of lighting devices that are permeable to light emitted by the organic layer stack, advertising displays such as company logos can be easily integrated into shop windows or information can be displayed in windscreens of motor vehicles or aircraft.

Furthermore, lighting devices that are at least partially permeable to the light generated by the organic layer stack can be used in ceiling elements, for example in museums or congress centers. This allows daylight to penetrate through the ceiling element into the respective room when the lighting device is switched off, while the ceiling element with the lighting device can be used for lighting at night or at dusk.

According to at least one embodiment, the substrate is milky.

According to a further embodiment, the encapsulation is milky.

For example, a surface of the substrate and/or encapsulation is rough and/or scattering centers are introduced into the substrate/encapsulation.

It is also possible to apply an additional film/layer with so-called "polymer dispersed liquid crystals" to the substrate and/or the encapsulation. This allows the milkiness to be switched on and off electrically. When a voltage is applied, this layer is clear; when it is switched off, it becomes milky.

A milky version of the substrate or encapsulation, for example as milky window glazing, can be particularly advantageous for the above-mentioned applications if the window in question does not require a clear view for design or functional reasons.

According to at least one embodiment, the lighting device comprises at least one reflective element. The reflective element is preferably formed along one of the main planes of the lighting device. Particularly preferably, the reflective element is formed completely along the main plane of the lighting device. The reflective element can be arranged on the underside of the lighting device, for example on the side of the substrate facing away from the organic layer stack, or on the upper side of the lighting device, for example on the side of the encapsulation facing away from the organic layer stack. Furthermore, the reflective element can be arranged, for example, between the first electrode and the substrate or between the second electrode and the encapsulation. The arrangement of a reflective element within the lighting device generally cuts off one of the main surfaces from the light generated in the organic layer stack, i.e. the light generated

in the organic layer stack is only emitted from one of the main surfaces, i.e. from the underside or top side. This main surface is also referred to below as the "light-emitting front surface." It should be noted at this point that the term "light-emitting front surface" does not necessarily mean that the entire main surface from which the light generated in the organic layer stack is emitted is light-emitting. Rather, only part of the front surface can be light-emitting. In the present case, the luminous surface of the light-emitting front side, the underside and the top side are also referred to as the "luminous surface."

The other elements of the lighting device, or at least the elements of the lighting device through which the light generated in the organic layer stack passes on its way to the light-emitting front side, are preferably designed to be transparent to the light generated in the organic layer stack. It is particularly preferred that these elements are generally transparent to visible light.

If a lighting device, where the elements through which the light generated by the organic layer stack passes on its way to the light-emitting front side are made translucent, comprises at least one reflective element, the lighting device can advantageously serve as an illumination source when switched on and as a mirror when switched off, due to the reflective element in combination with the other elements of the lighting device that are translucent to visible light. With this lighting device, it is thus advantageously possible to switch between mirror function and lighting function.

A lighting device comprising a reflective element is also referred to as a "reflective lighting device."

The lighting device can have an additional reflective element or one of the elements of the lighting device, such as a substrate, electrodes or encapsulation, can be designed as a reflective element.

According to at least one embodiment, the lighting device comprises a reflective layer sequence as a reflective element.

The reflective layer sequence may, for example, comprise or consist of a dielectric mirror. The reflective layer sequence may also comprise a silver layer and a layer of more mechanically resistant copper. Preferably, the reflective layer is then electrically insulated from the functional layers of the lighting device, such as electrodes or the organic layer stack.

The reflective layer sequence can be arranged on the underside of the lighting device, for example on the side of the substrate facing away from the organic layer stack, or on the upper side of the lighting device, for example on the side of the encapsulation facing away from the organic layer stack. Furthermore, the reflective layer sequence can be arranged, for example, between the first electrode and the substrate or between the second electrode and the encapsulation.

The reflective layer sequence can also form the outermost layer of one of the electrodes, for example.

According to at least one embodiment, the lighting device comprises an anti-reflective layer sequence. Such an anti-reflective layer sequence is preferably applied to one of the outer surfaces, i.e. to the top or bottom of the lighting device. If the lighting device only emits light from one of the main surfaces, namely from the light-emitting front side,

the anti-reflective layer sequence is preferably applied to the light-emitting front side.

An anti-reflective layer sequence preferably comprises a dielectric material or consists of such a material. For example, the layer sequence may include at least one layer comprising silicon nitride or silicon oxide.

According to at least one embodiment, the first or second electrode is reflective. In this case, the reflective electrode forms the reflective element. Preferably, the reflective electrode comprises silver, aluminum and/or gold or consists of one of these materials.

Furthermore, the encapsulation can be reflective and serve as a reflective element. In this case, the lighting device emits the light generated in the organic layer stack through the substrate.

According to at least one embodiment, the reflective encapsulation comprises or consists of a metal cap. Particularly preferably, the metal cap is polished on its inner side facing the organic layer stack.

According to a further preferred embodiment, the reflective encapsulation is formed by a reflective thin-film encapsulation with at least one barrier layer. In this embodiment, the thin-film encapsulation already described above comprises at least one reflective layer. This reflective layer preferably comprises or consists of a metal.
Particularly preferably, the reflective thin film encapsulation comprises at least one of the following layers as a reflective layer: a silver layer, a copper layer. Particularly preferably, the thin film encapsulation comprises a silver layer and a copper layer as a reflective layer.

Furthermore, the reflective thin-film encapsulation can comprise a reflective layer sequence, such as a Bragg mirror, as the reflective layer. As described above, the thin-film encapsulation can comprise alternating layers of different materials, which form a particularly dense encapsulation and at the same time a Bragg mirror or a dielectric mirror.

According to a further embodiment, the lighting device comprises a getter material which is transmissive for the light emitted by the organic layer stack, preferably furthermore generally transmissive for visible light.

According to at least one embodiment, the getter material, which is at least transmissive for the light emitted by the layer stack, is comprised by the reflective encapsulation.

The getter material has the task of binding substances, such as oxygen and/or moisture, which can penetrate into the lighting device despite the encapsulation.

The getter material is preferably enclosed by the encapsulation in such a way that it faces into the space to be encapsulated, i.e. towards the organic layer stack. If a metal cap is used as encapsulation, the getter material is preferably attached to the inside of the metal cap facing the organic layer stack, for example in the form of a layer. To ensure that the metal cap has good reflective properties, a getter material that is permeable to the light emitted by the layer stack is particularly advantageous.

To attach a cap as an encapsulation to the substrate, for example, an adhesive is used which is arranged around the active area. Such an adhesive, but also another bonding agent, can also be mixed with a getter material. As the bonding agent is often more permeable to harmful substances, such as

moisture and oxygen, than the cap, this offers the advantage that these substances can be bound by the getter material as soon as they penetrate the lighting device.

A thin-film encapsulation, in particular with the alternating barrier layers described above, is generally so tightly sealed that no getter material needs to be used.

According to at least one further embodiment, the substrate is reflective. In this case, the substrate preferably forms the reflective element described above. In this case, all other elements of the lighting device that are arranged above the substrate are preferably at least permeable to the light emitted by the organic layer stack. For example, a metal foil or a metal plate can serve as the reflective substrate.

Lighting devices that comprise a reflective element and whose other elements, through which the light generated in the organic layer stack passes on its way to the light-emitting front surface, are designed to be permeable to visible light can be used as a mirror or as an illumination source, as already mentioned above. The lighting device can be designed in such a way that the entire surface of the light-emitting front serves as an illumination source when the lighting device is in operation and is used as a mirror when it is switched off. Furthermore, it is also possible to use the entire surface of the light-emitting front of the lighting device simultaneously as a mirror and an illumination source during operation. Furthermore, the surface of the light-emitting front can be segmented so that at least a certain area is used as a mirror and at least another area is used as an illumination source during operation.

Lighting devices that have a mirror and lighting function generally comprise at least one electrode that is permeable to

the light generated by the organic layer stack and through which the light passes on its way to the light-emitting front side.

According to at least one embodiment, this translucent electrode is structured so that a desired shape of the luminous surface is predetermined within the front of the lighting device. The shape of the illuminated surface can, for example, be designed according to a logo or a symbol so that this or other information appears against the background of a reflective surface during operation. In a mirror for motor vehicles, such as a rear-view or side mirror, for example, warnings such as distance messages when parking can be displayed in the mirror.

Furthermore, a lighting device with a mirror and lighting function can be included in a bathroom or checkroom mirror or be designed as a bathroom or checkroom mirror. The bathroom or checkroom mirror can, for example, be designed in several parts with a main mirror in the center and two mirror wings on the sides. The mirror wings attached to the side can be designed as lighting devices with a mirror and lighting function, for example, and serve as a mirror in good lighting conditions. In poor lighting conditions, one or both mirror wings can then be switched on as a light source to illuminate the viewer. Advantageously, such an illuminated mirror wing can also serve as a decorative lighting element.

Furthermore, a lighting device with illumination and mirror function can be included in a search mirror. In the simplest case, such a search mirror is a holding element with an angled mirror element at one end, such as a dental mirror. According to an embodiment, the mirror element comprises a lighting device with an illumination and mirror function. The combination of mirror function and illumination function in

the mirror element of the search mirror offers the advantage of being able to see in places that are difficult to access as well as being able to illuminate these areas. Such search mirrors can be used, for example, as dental utensils or in domestic applications, for example to search for lost objects behind or under furniture that is difficult to move. Furthermore, the use of a lighting device with mirror and illumination function in a search mirror offers the advantage that the mirror and lamp can be operated simultaneously with one hand.

A lighting device with mirror and lighting function can also be integrated in a mirror of a portable cosmetics set. If no external light is available, the mirror lighting can be activated to create better lighting conditions for the viewer.

Furthermore, lighting devices with a mirror and lighting function can be used as decorative elements, such as flashing mirrors. A flashing mirror can be used, for example, in a flashing poinsettia.

According to at least one embodiment of the lighting device, the lighting device is flexible. A flexible lighting device is characterized, among other things, by the fact that it can be bent to a certain degree without being damaged. Preferably, the flexible lighting device can be bent several times without being damaged. The lighting device is then suitable for surviving a number of bending cycles undamaged.

Particularly preferably, the lighting device is designed to be so flexible that it can be wound onto a roll and unwound from the roll without being damaged.

According to at least one embodiment of the lighting device, the encapsulation of the lighting device is flexible. Flexible

means, among other things, that the encapsulation can be bent to a certain degree without the encapsulation being damaged when bent. The flexible encapsulation is, for example, a thin layer of glass, a laminate or a thin layer - for example a foil - made of plastic or metal. Furthermore, the flexible encapsulation can be a thin-film encapsulation as described above. The thin film encapsulation preferably comprises at least one barrier layer as described above.

According to at least one embodiment, the flexible encapsulation is transparent, that is, the flexible encapsulation is transparent to at least part of the light generated in the organic layer stack of the lighting device, so that this part of the light can leave the lighting device through the flexible encapsulation.

According to at least one embodiment of the lighting device, the substrate of the lighting device is flexible. Flexible means, among other things, that the substrate can be bent to a certain degree without the substrate being damaged during bending.

According to at least one embodiment of the lighting device, the substrate is formed from a metal. The substrate then preferably comprises at least one of the following materials: aluminum, stainless steel, gold, silver. One of the particular advantages of using a metallic substrate as a substrate for the lighting device is that the good reflectivity of the material can contribute to an increase in the light output of the lighting device. At least part of the light that strikes the metal substrate from the active area of the lighting device during operation can be reflected by it in the direction of the light-emitting front side of the lighting device.

Preferably, the metal is flexible. The substrate can be formed as a sheet metal, for example. The substrate is then preferably designed as a medium sheet with a thickness of at least 3 mm and at most 4.75 mm or as a thin sheet with a thickness of at most 3 mm.

The flexible substrate can also be designed as a metal foil. The substrate then preferably has a thickness of at most 1 mm, particularly preferably at most 0.5 mm.

According to at least one embodiment of the lighting device, both the substrate and the encapsulation are flexible. The encapsulation and substrate are preferably designed according to one of the embodiments described above. For example, the substrate and/or encapsulation can be designed as a film. The substrate can also be designed as a foil and the encapsulation as a thin-film encapsulation.

According to at least one embodiment of the lighting device, the lighting device comprises a flexible substrate formed from a metallic material. For example, the flexible substrate is designed as a sheet metal. The first electrode of the lighting device is arranged downstream of the first main surface of the flexible substrate. Further layers may be arranged between the substrate and the first electrode. For example, between the substrate and the first electrode there may be an electrically insulating layer coating at least the first main surface of the substrate. The electrically insulating layer electrically decouples the first electrode from the substrate.

In this embodiment, the organic layer stack of the lighting device is arranged downstream of the first electrode. The organic layer stack is applied directly to the first electrode, for example. The organic layer stack comprises an organic layer that is intended for generating light.

The organic layer stack is followed by the second electrode. For example, the second electrode is applied directly to the organic layer stack. As described above, the second electrode is preferably translucent.

In this embodiment, the second electrode is followed by a planarization layer, as described above. For example, the planarization layer is arranged directly on the second electrode. The planarization layer preferably contains an organic material. Furthermore, the planarization layer may contain one of the following materials: scattering centers such as diffuser particles, luminescence conversion material and color filter material.

The planarization layer is followed by a barrier layer. Preferably, the planarization layer is followed by a plurality of barrier layers. As part of a thin-film encapsulation, the barrier layers form the flexible encapsulation of the lighting device and are applied directly to the planarization layer, for example.

According to at least one embodiment, the substrate of the lighting device is designed as a plastic film. This means that the substrate has a thickness of preferably at most 1 mm, particularly preferably at most 0.5 mm, and contains or consists of plastic.

According to at least one embodiment of the lighting device, the lighting device comprises a flexible substrate which is formed as a film, preferably as a plastic film. The plastic film may consist of plastic or contain plastic. For example, the substrate may comprise a metal foil as the base body, which is coated with a plastic material.

Particularly preferably, the plastic film consists of a translucent plastic that is permeable to at least part of the light generated in the organic layer stack of the lighting device during operation.

A first electrode is arranged downstream of the first main surface of the plastic film. Preferably, the first electrode is applied directly to the first main surface of the substrate, i.e. the foil. The first electrode is preferably - as described above - translucent.

The organic layer stack of the lighting device is arranged downstream of the first electrode. For example, the organic layer stack is applied directly to the first electrode. The organic layer stack comprises an outermost organic layer. The outermost organic layer is doped with a dopant. Preferably, the dopant of the doped layer - as described above - is as large as possible atoms or molecules, which are suitable for emitting electrons in the case of an n-dopant and for emitting holes in the case of a p-dopant. Furthermore, the dopant preferably has a low diffusion constant within the organic layer stack, as is usually the case with large atoms or molecules, for example. Cesium, for example, is a particularly suitable dopant.

The second electrode is placed downstream of the organic layer stack. The second electrode is preferably applied directly to the organic layer stack. As described above, the second electrode is translucent. In this embodiment, the lighting device is preferably free of any getter material.

According to one embodiment of the lighting device, it comprises a flexible encapsulation. Preferably, the flexible encapsulation is translucent, i.e. it is permeable to at least

part of the light generated in the active area during operation of the lighting device.

Among other things, the lighting device makes use of the idea that a flexible lighting device with a translucent substrate, translucent first electrode, translucent second electrode and translucent encapsulation is particularly versatile. For example, a lighting device designed in this way can be used as a translucent encapsulation for other lighting devices - such as a lampshade for an incandescent lamp. The light generated by the light bulb can penetrate the flexible, translucent lighting device to a large extent. The lighting device can be used to add light of a different color to the light of the incandescent lamp.

According to at least one embodiment of the lighting device, the substrate is designed as a laminate. Preferably, the substrate is flexible. The laminate preferably comprises at least one first layer and at least one second layer. Particularly preferably, the material used to form the first layer differs from the material used to form the second layer.

According to at least one embodiment of the lighting device, the substrate of the lighting device is formed as a laminate with a first layer consisting of plastic. A second layer, which consists of glass, is applied to the first layer. Preferably, a third layer consisting of plastic is applied directly to the second layer. Particularly preferably, the third layer is made of the same plastic as the first layer. In other words, according to this embodiment, the substrate is designed as a plastic-glass-plastic laminate.

Preferably, the laminate is flexible. For this purpose, the plastic layers are designed as a film or thin coating of the

glass base body. The glass base body is formed by a thin, flexible glass pane.

According to at least one embodiment of the lighting device, the lighting device has a flexible plastic-glass-plastic laminate as a substrate. The substrate is followed by a first electrode. The first electrode is applied directly to the first main surface of the substrate.

The organic layer stack of the lighting device is arranged downstream of the first electrode. The organic layer stack is applied directly to the first electrode, for example. The organic layer stack comprises an organic layer that is intended for generating light.

The organic layer stack is followed by the second electrode. For example, the second electrode is applied directly to the organic layer stack. The second electrode is preferably - as described above - translucent.

The second electrode is followed by a planarization layer, as described above. For example, the planarization layer is arranged directly on the second electrode. The planarization layer preferably contains an organic material. Furthermore, the planarization layer may contain one of the following materials: scattering centers such as diffuser particles, luminescence conversion material, color filter material.

The planarization layer is followed by a barrier layer. Preferably, the planarization layer is followed by multiple barrier layers. As part of a thin-film encapsulation, the barrier layers form the flexible encapsulation of the lighting device and are applied directly to the planarization layer, for example.

According to at least one embodiment of the lighting device, the substrate is formed by the slat of a Venetian blind. This means that the slat of a blind serves as a substrate for the lighting device. Preferably, all the slats of the blind then serve as a substrate for one lighting device in each case. The blind is attached to a window or door, for example, so that the first main surfaces of the substrates formed by the slats of the blind are directed towards the interior of the room containing the window or door. The blind can then be used, for example, to illuminate the interior with a light, preferably one that is similar to sunlight, when the blind is closed.

According to at least one embodiment of the lighting device, an adhesive layer is applied to the second main surface of the substrate facing away from the first main surface of the substrate of the lighting device. The adhesive layer is preferably covered by a protective film before the lighting device is attached to its destination. After removing the protective film, the lighting device can be permanently attached to its destination in the form of a peel-off or adhesive image. The adhesion is provided by the adhesive layer on the second main surface of the substrate. A flexibly designed lighting device - as described above, for example - is particularly suitable for this purpose, as uneven surfaces, such as rounded or curved surfaces, can also be bonded to the lighting device in this way.

According to at least one embodiment of the lighting device, the lighting device comprises at least a first color sub-region. The first color sub-region is suitable for emitting light of a first color. Furthermore, the lighting device comprises at least one second color sub-region. The second color sub-region is suitable for emitting light of a second color that is different from the first color. In other words, the lighting device comprises at least two color sub-regions,

each of which is suitable for emitting light of a different color from one another.

A lighting device with at least two color sub-areas is also called "multicolored" in the present case. The color sub-areas of a multi-colored lighting device can be arranged in any order, for example next to each other or vertically on top of each other.

It is also possible for the lighting device to comprise multiple first color sub-areas. The first color sub-areas are each suitable for emitting light of the first color. The lighting device can then further comprise multiple second color sub-regions, each of which is suitable for emitting light of the second color.

The lighting device is based, among other things, on the idea that the division into at least two color sub-regions enables a lighting device that can emit light of at least two different colors.

The lighting device may also be capable of emitting mixed light of the two different colors. This means that an observer perceives mixed-colored light and cannot distinguish between the individual color sub-areas. This can be achieved, for example, by selecting sufficiently small dimensions for laterally adjacent color sub-areas or by arranging the color sub-areas vertically one above the other. The first and second color subregions of the organic layer stack can emit light simultaneously or sequentially in short succession.

According to at least one embodiment of the lighting device, the color sub-regions are arranged in a common plane. This means that the color sub-regions are arranged laterally next

to each other or laterally spaced apart from each other. The color sub-regions can, for example, be arranged in the manner of pixels of a display device. Compared to pixels of a display device, however, the color sub-areas have a larger illuminated area. Preferably, the illuminated area of each color sub-region of the lighting device is at least one square millimeter.

If the color sub-areas are arranged in a common plane, a color sub-area is formed, for example, by dividing the active area of the substrate into different sub-areas, with each sub-area of the substrate being assigned to a color sub-area. A first electrode, on which the organic layer stack is located, is applied to the sub-areas. The second electrode is also applied to the organic layer stack. At least one of the electrodes can be structured, preferably corresponding to the sub-areas. Structuring at least one electrode can enable separate control of the individual color sub-areas.

Furthermore, the organic layer stack can be structured according to the sub-areas, preferably in such a way that each sub-area of the substrate comprises a separate organic layer stack.

According to one embodiment of the lighting device, the organic layer stacks of different color sub-regions each comprise different light-generating layers which differ with respect to their emitter material and which are suitable for generating light of different colors.

According to at least one embodiment, the subregions of the substrate, which correspond to the color subregions, are separated from one another by webs. The webs preferably have an electrically insulating material, for example a photoresist.

According to at least one embodiment of the lighting device, the color sub-region of the lighting device comprises a color filter. The color filter is suitable for filtering light of a specific wavelength range. This means that light of this wavelength range is at least partially absorbed by the color filter. In this way, a first color component can be filtered out of white light, for example, while a second color component can pass through the color filter essentially unhindered. The color sub-area with the color filter then essentially emits light of the second color component.

The color filter is embedded in a matrix material, for example, in the form of particles of one or more color filter materials.

In particular, color sub-areas that are arranged within a plane can usefully comprise a color filter. The color filter is generally arranged between the first electrode and the underside of the lighting device if the lighting device is intended to emit light from its underside and between the second electrode and the upper side of the lighting device if the lighting device is intended to emit light from its upper side. If the lighting device is intended to emit light from its upper side and from its lower side, a color filter may also be provided between the first electrode and the lower side, and between the second electrode and the upper side, respectively. The color filter of the color sub-area can, for example, be applied to the substrate within a sub-area of the substrate. Furthermore, the color filter can also be arranged on the outside of the substrate within an area of the substrate corresponding to the lower area or within an area of the encapsulation corresponding to the lower area.

According to at least one embodiment of the lighting device, the lighting device comprises a first color sub-region

comprising a first color filter and a second color sub-region comprising a second color filter, wherein the first color filter is different from the second color filter. In this way, the same organic emitter material can be used for the two color sub-regions. The color of the light emitted by the color sub-regions is then determined by the respective color filter of each color sub-region. In this way, a lighting device with a first color sub-region and a second color sub-region is created, wherein the first color sub-region emits light of a first color and the second color sub-region emits light of a second color and the first color is different from the second color. For example, the layer of the organic layer stack intended for light generation is suitable for emitting white light. The color filters then filter different color components from this white light.

An emitter material suitable for emitting white light is described, for example, in the publication D. Buchhauser et al., "Characterization of White-Emitting Copolymers for PLED-Displays," Proc. of SPIE, Vol. 5519, pp. 70-81, (2004), the disclosure of which is hereby incorporated by reference. The emitter material described herein is a broadband emitter based on a polymeric material comprising copolymers. The copolymers comprise polyspirobifluorenes as a backbone, which are suitable for emitting light from the blue spectral range. Furthermore, green-emitting and red-emitting units are covalently coupled to the polyspirobifluorenes.

According to at least one embodiment of the lighting device, the lighting device comprises at least one color sub-region containing a luminescence conversion material. The luminescence conversion material is suitable for converting light of a first wavelength range into light of a second wavelength range, wherein the first wavelength range differs at least in places from the second wavelength range. The

luminescence conversion material is preferably intended for down-conversion. This means that the luminescence conversion material absorbs light of at least a first wavelength, which is covered by the first wavelength range, and re-emits light of at least a second wavelength, which is covered by the second wavelength range, wherein the first wavelength is smaller than the second wavelength. Suitable luminescence conversion materials are, for example, the organic and inorganic materials already described above in connection with the planarization layer.

According to at least one embodiment of the lighting device, the lighting device comprises at least two color sub-regions, each comprising a luminescence conversion material, wherein different color sub-regions comprise different luminescence conversion materials from each other. For example, the active region comprises a first color sub-region encompassing a first luminescence conversion material and a second color sub-region encompassing a second luminescence conversion material, wherein the first luminescence conversion material is different from the second luminescence conversion material. In this way, the first color sub-region is adapted to emit light of a first color and the second color sub-region is adapted to emit light of a second color, wherein the first color is different from the second color.

In particular, color sub-areas arranged within a plane can expediently comprise a luminescence conversion material. The luminescence conversion material is generally arranged between the first electrode and the bottom surface of the lighting device when the lighting device is intended to emit light from its bottom surface and between the second electrode and the top surface of the lighting device when the lighting device is intended to emit light from its top surface.

If the lighting device is intended to emit light from its upper side and from its lower side, a luminescence conversion material can also be provided between the first electrode and the lower side, as well as between the second electrode and the upper side. The luminescence conversion material of the color sub-region can, for example, be applied to the substrate within a sub-region of the substrate. Furthermore, the luminescence conversion material can also be arranged on the outside of the substrate within an area of the substrate corresponding to the sub-area or within an area of the encapsulation corresponding to the sub-area.

According to at least one embodiment of the lighting device, the color sub-regions of the lighting device are arranged vertically one above the other. Each color sub-region comprises at least one organic layer of the layer stack of the lighting device, which is suitable for generating light. The different layers of the organic layer stack provided for generating light can then differ from one another, for example with regard to an emitter material.

According to at least one embodiment of the lighting device, different color sub-regions of the lighting device comprise different emitter materials. That is, the first color sub-region comprises a first organic emitter material. The second color sub-region then comprises a second organic emitter material, wherein the first organic emitter material is different from the second organic emitter material. Due to the different emitter materials, the different color sub-regions are then suitable for generating light of different colors from one another.

According to at least one embodiment of the lighting device, the lighting device comprises at least one third color sub-region suitable for emitting light of a third color, wherein

the third color is different from the first color and the second color. That is, the lighting device comprises at least three different color sub-regions that emit light of different colors in pairs. Preferably, the lighting device then comprises a plurality of third color sub-regions each capable of emitting light of the third color.

According to at least one embodiment, the lighting device comprises at least one fourth color sub-region suitable for emitting light of a fourth color, wherein the fourth color is different from the first color, the second color and the third color. That is, the lighting device comprises at least four different color sub-regions that emit light of different colors in pairs. Preferably, the lighting device then comprises a plurality of fourth color sub-regions, each suitable for emitting light of the fourth color.

According to at least one embodiment of the lighting device, the lighting device comprises more than four different color sub-regions, wherein the different color sub-regions differ from each other by the color of the light emitted by them.

According to at least one embodiment of the lighting device, the lighting device comprises at least one color sub-region capable of emitting white light. Preferably, the lighting device comprises a plurality of color sub-regions, each of which is capable of emitting light of white color.

According to at least one embodiment of the lighting device, similar color sub-areas of the lighting device can be controlled together. Similar color sub-areas are color sub-areas that have the same structure and are therefore suitable for emitting light of the same color. Similar color sub-regions are characterized, for example, by the same organic emitter material and/or the same color filter and/or the same

luminescence conversion material. For example, all first color sub-areas that are suitable for emitting light of the first color can be controlled together.

Commonly controllable means that these color sub-areas can be energized at the same times. The same color sub-areas can then, for example, be energized for the same times, for the same durations, with the same current intensity. This can be achieved, for example, by electrically connecting similar color sub-areas to each other. For example, one of the electrodes of the lighting device is then structured in such a way that all similar color sub-areas are electrically conductively connected to each other by means of this electrode.

According to at least one embodiment of the lighting device, different color sub-areas can be controlled independently of each other. This means, for example, that the first and second color sub-areas can be energized independently of one another, so that the first color sub-area is energized at first times and the second color sub-area is energized at later times. For example, all first color sub-regions and all second color sub-regions can be energized alternately, so that the lighting device is suitable for emitting light of the first and second color alternately. When the first color sub-region and the second color sub-region are operated simultaneously, the lighting device then emits light, for example mixed light, of the first and second color.

According to at least one embodiment of the lighting device, the lighting device comprises a control device which is intended to set the operating state of the lighting device. The control device may, for example, be a switch that can be used to turn the lighting device on and off. Preferably, however, the control device is suitable for setting more than

two operating states of the lighting device. For example, the control device can be suitable for controlling different color sub-areas of the lighting device separately from each other.

According to at least one embodiment of the lighting device, the control device comprises a micro-controller.

According to at least one embodiment of the lighting device, the control device is arranged on the first main surface of the substrate of the lighting device. The control device can then, for example, be a separate component that is arranged at a distance from the organic layer stack of the lighting device on the first main surface of the substrate. Furthermore, the control device may contain at least one organic material and be manufactured together with the layer stack of the lighting device. This enables a particularly space-saving and cost-effective integration of the control device into the lighting device.

According to at least one embodiment of the lighting device, the control device is encapsulated together with the organic layer stack of the lighting device in a common encapsulation. This proves to be particularly advantageous if the control device contains an organic material as described above.

The encapsulation of the lighting device protects the control device from damage caused by atmospheric gases, moisture and mechanical stress. A control device encapsulated together with the organic layer stack of the lighting device, which contains an organic material, enables, among other things, an advantageously compact, flexible lighting device. One of the encapsulations described above, such as caps, thin plates, foils or thin-film encapsulation, is particularly suitable for encapsulation.

According to at least one embodiment of the lighting device, the control device is intended to control at least two color sub-regions of the lighting device independently of one another. The control device is then suitable for energizing two different color sub-regions of the lighting device at different times, for different durations and/or with current of different intensity.

According to at least one embodiment of the lighting device, the control device comprises a pulse width modulation circuit. The pulse width modulation circuit is suitable for applying a pulse width modulated signal to the active area and/or color sub-areas of the active area of the lighting device.

A pulse-width modulated signal is an electrical signal, preferably a square wave signal, a sawtooth signal, a triangular signal or a sinusoidal signal, which is switched on for a certain time within a fixed basic period and switched off for the remaining duration of the basic period. The duration for which the signal is switched on is also referred to as the pulse duration. The value of the signal during the pulse duration is also referred to as the pulse height. The ratio of the switch-on time and the basic period $t_{ein}/(t_{ein}+t_{aus})$ is referred to as the duty cycle. It indicates the percentage of time over which the square wave signal is switched on within the basic period.

The pulse height, pulse duration and/or direction of the pulse width modulated signal therefore changes periodically, for example. The pulse duration, the interval between the pulses and the pulse height are preferably adjustable. Furthermore, the reverse voltage level and the frequency of the pulse width modulation circuit can be set, for example, by a micro-controller that is part of the control device.

According to at least one embodiment of the lighting device, the control device can be controlled by a user. The user can then, for example, set the parameters of the pulse width modulation circuit of the control device.

According to at least one embodiment of the lighting device, the color of the light emitted by the lighting device can be adjusted by means of the control device. For example, the control device energizes certain color sub-areas of the lighting device so that the desired color impression of the light emitted by the lighting device is achieved.

This is particularly easy, for example, if the lighting device comprises a first and a second color sub-area that are connected antiparallel to each other. By supplying the organic layer stack with current in a first direction, the first color sub-region is then operated in the forward direction, while the second color sub-region is switched in the reverse direction at this time, so that no current flows through the second color sub-region. By simply changing the current direction, the second color sub-region is energized in the forward direction at a second time, so that light of the second color is emitted by the lighting device. The first color sub-area is switched in the blocking direction for the second period of time so that no current flows through the first color sub-area.

According to at least one embodiment of the lighting device, the color and brightness of the light emitted by the lighting device is dependent on the current density of the current with which the lighting device is energized. For this purpose, the lighting device has, for example, at least two color sub-regions, which are preferably arranged vertically one above the other. The field strength of the electric field generated between the first and second electrodes during operation of

the lighting device then determines in which color sub-area a recombination of the charge carriers takes place in the active area of the lighting device. In this way, the color and brightness of the emitted light can be adjusted, for example, by the pulse height and pulse duration of a current flowing through the active area.

According to at least one embodiment, the control device is provided to adjust the current density of the current energizing the lighting device. In other words, the control device is preferably suitable for adjusting the strength of the current energizing the lighting device and/or the duration of the current energizing the lighting device. The color and brightness of the light emitted by the lighting device then preferably depends on the strength of the current energizing the lighting device and/or the duration of the energizing of the lighting device. Two, three, four or more colors can be controlled independently of each other.

According to at least one embodiment, the lighting device comprises a sensor that is suitable for determining the color location and/or the brightness of the light emitted by the lighting device during operation. The sensor may, for example, be arranged on the first main surface within the active area of the substrate of the lighting device. In particular, the sensor may contain an organic material and be manufactured together with the organic layer stack of the lighting device. The sensor can then, for example, be encapsulated together with the organic layer stack of the lighting device by means of a joint encapsulation. The sensor is preferably a photodiode or a phototransistor.

Alternatively, the sensor can be designed as a separate component. The sensor can then, for example, be arranged on the first main surface or the second main surface of the

substrate facing away from the first main surface. In this case, the sensor is not necessarily encapsulated together with the organic layer stack of the lighting device.

According to at least one embodiment of the lighting device, the lighting device comprises a control device which is intended to energize the lighting device depending on the measured values determined by the sensor. This means that the control device is suitable for controlling the lighting device depending on the color location and/or the brightness of the light emitted by the lighting device during operation. The lighting device comprises, for example, an organic layer stack as described above, in which the color of the light emitted by the lighting device is dependent on the density of the current energizing the lighting device. The control device is then suitable for setting a specific color location and a specific brightness of the generated light by readjusting the density of the current energizing the lighting device depending on the measured values determined by the sensor. In this way, the control device is able to set a specific color of the light generated by the lighting device by means of a control circuit. The color can be specified by a user of the lighting device or a micro-controller of the control device.

According to at least one embodiment of the lighting device, the lighting device comprises at least one connection point, which is provided for making electrical contact with the lighting device. The connection point is electrically conductively connected to at least one electrode of the lighting device - for example by means of an electrical supply line described above. The lighting device can be electrically contacted from outside the lighting device via the connection point. The connection point can, for example, be electrically connected to a voltage source, a current source or a control device.

According to at least one embodiment of the lighting device, the connection point is arranged on the second main surface of the substrate facing away from the first main surface of the substrate of the lighting device. The connection point is electrically conductively connected to at least one of the electrodes of the lighting device, for example by means of vias or openings in the substrate.

Alternatively, an electrically conductive connection between the connection point and at least one electrode of the lighting device can be made via the side surfaces of the substrate. In this case, vias or openings in the substrate can be dispensed with.

The connection between at least one electrode of the lighting device and the connection point can be made using electrical supply lines. The electrical supply lines are designed, for example, as an electrically conductive layer on parts of the lighting device, as conductor tracks integrated into the substrate or as contact wires.

According to at least one embodiment of the lighting device, at least one connection point of the lighting device is arranged on a side surface of the substrate. The side surface of the substrate preferably connects the first main surface of the substrate to the second main surface of the substrate. In the event that the lighting device has more than one connection point, all connection points of the lighting device can be arranged either on a side surface of the substrate or on the second main surface of the substrate. Furthermore, connection points may be located both on the side surface of the substrate and on the second main surface of the substrate.

According to at least one embodiment of the lighting device, at least one connection point of the lighting device is

designed as a connecting pin. The connecting pin can be arranged on the second main surface of the substrate or on a side surface of the substrate. The connecting pin contains or consists of an electrically conductive material, such as a metal.

According to at least one embodiment of the lighting device, at least one connection point of the lighting device is designed as a connector plug. The connector plug can be arranged on the second main surface of the substrate or on a side surface of the substrate. The connector plug is designed, for example, in the manner of an RCA plug or in the manner of a jack plug. In particular, the connector plug may have at least two contact areas that are electrically insulated from each other. The first contact area is then electrically conductively connected to the first electrode of the lighting device - for example via first electrical supply lines. The second contact area is connected in a correspondingly conductive manner to the second electrode of the lighting device - for example via second electrical supply lines.

According to at least one embodiment of the lighting device, at least one connection point of the lighting device is designed as a recess. The recess is, for example, a hole or a bore that is made in the substrate on a side surface of the substrate or on the second main surface of the substrate.

The side surfaces of the recess are at least partially electrically conductive. The side surfaces of the recess can, for example, have an electrically conductive layer.

According to at least one embodiment of the lighting device, at least one connection point of the lighting device is designed as a socket. The socket can, for example, be designed like a cinch socket or a jack socket. The socket then has two

electrically conductive contact areas that are electrically insulated from each other. The first contact area is then electrically conductively connected to the first electrode of the lighting device - for example via first electrical supply lines. The second contact area is electrically conductively connected to the second electrode of the lighting device - for example via second electrical supply lines.

According to at least one embodiment of the lighting device, the lighting device has at least one connection point comprising multiple connection pins. The connection point then comprises at least one first connection pin, which is electrically conductively connected to the first electrode of the lighting device. Furthermore, the connection point comprises a second connection pin, which is electrically conductively connected to the second electrode of the lighting device. In addition, the connection point can comprise further connection pins that are electrically conductively connected to a control device of the lighting device, for example. In this way, the control device can be controlled from outside the lighting device via the corresponding connection pins.

According to at least one embodiment of the lighting device, the lighting device has a control device and a connection point that is electrically conductively connected to the control device. Electrical signals can be transmitted to the control device via the connection point. In this way, the control device can be adjusted from outside the lighting device - for example by a user.

According to at least one embodiment of the lighting device, at least one connection point of the lighting device is designed as a connecting bar that extends along a side surface of the substrate. The connecting bar is preferably

electrically conductively connected to at least one electrode of the lighting device.

The connecting rail can, for example, be cylindrical or designed as a cut-away cylinder. Preferably, the connecting rail extends over at least 60% of the length of the side surface of the substrate on which the connecting rail is arranged. Particularly preferably, the connecting rail extends over at least 80% of the length of the side surface of the substrate on which the connecting rail is arranged.

According to at least one embodiment of the lighting device, at least one of the connection points is provided for mechanical attachment of the lighting device. The lighting device can be mechanically connected to other lighting devices or to a carrier by means of this connection point, for example. Particularly preferably, the connection point is provided for both mechanical and electrical attachment of the lighting device. This means that the lighting device is electrically and mechanically connected to another lighting device or a carrier via the same connection point.

An illuminating device is also provided. The illuminating device comprises at least one lighting device as explained in connection with at least one of the embodiments described above.

According to at least one embodiment of the illuminating device, the illuminating device comprises at least two lighting devices that are electrically and mechanically connected to one another. The lighting devices can be directly electrically and mechanically connected to each other. However, it is also possible for the lighting devices to be electrically and mechanically connected to each other via a carrier of the illuminating device.

According to at least one embodiment of the illuminating device, the illuminating device comprises a first lighting device and a second lighting device. The first lighting device has at least one connection point, which is designed as a connecting pin. The connecting pin is arranged on a side surface of the substrate of the first lighting device. The second lighting device has at least one connection point, which is designed as a recess in a side surface of the substrate of the second lighting device. The connecting pin of the first lighting device engages in the recess of the second lighting device. The first and second lighting devices are electrically conductively connected to each other via their connection points - the connecting pin and the recess.

The illuminating device can also comprise further lighting devices that are electrically conductively connected to the first or second lighting device in the manner described.

According to at least one embodiment of the illuminating device, the first and second lighting devices are also mechanically connected to each other by means of a press fit at the connection points.

For example, a first connection point of the first lighting device is designed as a connection pin. A second connection point of the second lighting device is then designed as a recess. The diameter of the connecting pin of the first lighting device is selected to be greater than or equal to the diameter of the recess of the second lighting device. Pressing the connecting pin of the first lighting device into the recess of the second lighting device then creates a mechanically fixed connection between the first and second lighting devices. Preferably, the first and second lighting devices are mechanically and electrically connected to each other by the connecting pin and the corresponding recess.

According to at least one embodiment of the illuminating device, the first and second lighting devices are mechanically connected to each other by means of the connection points by means of a plug connection. For example, the first lighting device has a first connection point, which is designed as a connector plug. The second lighting device has a second connection point, which is designed as a socket. By inserting the connecting plug of the first lighting device into the connecting socket of the second lighting device, a plug connection is created by means of which the first lighting device is mechanically connected to the second lighting device. Preferably, the first lighting device and the second lighting device are also electrically connected to each other by means of the plug connection. The plug connection between the first and second lighting devices is preferably designed to be detachable, preferably in such a way that the first and second lighting devices can be detached from each other again by applying a small mechanical force. In this way, for example, a defective lighting device can be easily removed from the illuminating device and replaced with a new lighting device.

According to at least one embodiment of the illuminating device, the illuminating device comprises a carrier to which at least one lighting device of the illuminating device is mechanically connected.

According to at least one embodiment of the illuminating device, the illuminating device comprises a carrier to which at least one lighting device of the illuminating device is electrically connected. The lighting devices of the illuminating device may also be electrically connected to one another via the carrier.

According to at least one embodiment of the illuminating device, the illuminating device comprises a carrier to which at least one lighting device of the illuminating device is mechanically and electrically connected. In the event that the illuminating device has multiple lighting devices, the lighting devices are mechanically connected to each other by means of the carrier. In addition, the lighting devices may also be electrically connected to each other by means of the carrier.

According to at least one embodiment, the carrier is designed as a carrier plate. This means that the carrier is formed by a solid body that has two opposing main surfaces that are connected to each other by side surfaces.

According to at least one embodiment of the illuminating device, the carrier is designed as a grid. The carrier can be designed in the form of a carrier plate, which has multiple apertures. A carrier with the lowest possible weight is realized in this way.

According to at least one embodiment of the illuminating device, the support is designed as a cable system. The carrier then comprises at least two cables that contain an electrically conductive material or consist of an electrically conductive material. The lighting devices of the illuminating device can be electrically contacted by means of the cables of the carrier. For example, the cables of the illuminating device run parallel or essentially parallel to each other. One or more lighting devices can then be arranged and electrically connected between every two cables of the carrier.

According to at least one embodiment of the illuminating device, the carrier is designed as a rod system. The carrier then comprises at least two rods that contain an electrically

conductive material or consist of an electrically conductive material. The lighting devices of the illuminating device can then be electrically connected by means of the rods. For example, the rods of the illuminating device run parallel or essentially parallel to each other. One or more lighting devices can then be arranged between two rods of the support and electrically connected.

According to at least one embodiment of the illuminating device, at least one lighting device of the illuminating device is mechanically and electrically connected to the carrier by means of a connection point, which is designed as a connection pin. Preferably, all lighting devices of the illuminating device are then mechanically and electrically connected to the carrier by means of at least one connection point, which is designed as a connection pin. For this purpose, the carrier can, for example, have a large number of recesses. The connection points of the lighting devices, which are designed as connection pins, then engage in corresponding recesses in the carrier. The mechanical connection between the lighting devices and the carrier is preferably provided by a press fit.

According to at least one embodiment of the illuminating device, at least one lighting device of the illuminating device is mechanically and electrically connected to the carrier by means of at least one connection point, which is designed as a connector plug. Preferably, all lighting devices of the illuminating device are then mechanically and electrically connected to the carrier by means of at least one connection point, which is designed as a connector plug. For this purpose, the carrier can, for example, have a large number of recesses, each of which is designed as a connection socket. The connector plugs of the lighting devices then engage in corresponding sockets on the carrier. The mechanical

connection between the lighting devices and the carrier is preferably designed to be detachable, so that the lighting devices can be released from the carrier by applying a small amount of mechanical force. In this way, damaged lighting devices can be replaced particularly easily.

According to at least one embodiment of the illuminating device, at least one lighting device of the illuminating device is mechanically and electrically connected to the carrier by means of at least one connection point, which is designed as a connection rail. Preferably, all lighting devices of the illuminating device are then connected to the carrier by means of at least one connecting rail each. In this case, the support is preferably designed as a cable system or rod system.

For example, the support comprises two ropes or rods running parallel to each other, which are electrically conductive. At least one lighting device of the illuminating device then comprises at least two connection points, which are designed as connection rails. The connecting rails run alongside surfaces of the lighting device that face away from each other. Each connecting rail engages in a cable or rod of the carrier, so that the lighting device is arranged between the cables or rods of the carrier. Preferably, several lighting devices are connected to the carrier in this way.

According to at least one embodiment of the illuminating device, the illuminating device comprises a first lighting device and a second lighting device, wherein the first and second lighting devices emit light of different colors during operation. On the one hand, the first and second lighting devices may differ from one another in terms of the organic emitter material used, a luminescence conversion material or a

color filter. The first and second lighting devices are then designed differently.

However, the first and second lighting devices may also use lighting devices as described above, which are suitable for emitting light of at least a first and a second color during operation. This can be carried out, for example, as described above, in that the first and second lighting devices each comprise at least two color sub-regions that are suitable for emitting light of different colors from one another. In other words, the illuminating device comprises at least one multicolored lighting device, as described in more detail above.

According to at least one embodiment of the illuminating device, the illuminating device comprises multiple lighting devices suitable for emitting light of different colors from each other. That is, the illuminating device comprises multiple multicolored lighting devices.

According to at least one embodiment of the illuminating device, an optical element comprising a diffuser is arranged downstream of the lighting devices of the illuminating device in a radiation direction of the lighting devices. In this case, for example, the carrier is designed as a carrier plate. The carrier plate is then fitted with several lighting devices that are mechanically and electrically connected to the carrier plate. An optical element comprising a diffuser is arranged downstream of the side of the lighting devices facing away from the carrier plate. The optical element can, for example, be formed by a translucent plate - such as a glass plate - incorporating light-scattering particles. Alternatively, the surface of the translucent plate can be roughened so that light is diffusely scattered as it passes through the plate due to refraction. The optical element - for

example the diffuser plate - can be mechanically attached to the support of the illumination device.

The optical element arranged downstream of at least one lighting device of the illuminating device is preferably suitable for mixing the light generated by the lighting devices in such a way that the modular structure of the illuminating device consisting of several lighting devices is no longer recognizable to an observer. The illuminating device then appears to have a single illuminating surface, with the shape and surface area of the illuminating surface being determined by the shape and light transmission area of the optical element.

According to at least one embodiment of the illuminating device, the illuminating device has multiple lighting devices that are arranged in a matrix. "Arranged in a matrix" means that the lighting devices are arranged in rows and columns. The illuminating device also has a control device that is suitable for controlling each of the lighting devices of the illuminating device independently of the other lighting devices. The control device can therefore supply each lighting device of the illuminating device with a predeterminable operating current for predeterminable periods of time and at predeterminable times.

Due to the matrix-like arrangement of the lighting devices and the control device, which is suitable for controlling each of the lighting devices independently of the other lighting devices of the illuminating device, the illuminating device is suitable for forming a coarse-grained display device. Each lighting device then corresponds to a pixel of the display device. In this way, the illuminating device is suitable for use as a coarse-grained display, advertising logo or signal transmitter. The illuminating device can also be used as a

seven-segment display for displaying numbers and letters. The illuminating device is also particularly suitable as emergency lighting, using symbols or words to indicate an escape route, for example.

The lighting devices of the illuminating device designed as a coarse-grained display device are preferably mechanically and electrically connected to a carrier via connection points as described above and/or are electrically and mechanically connected to one another via connection points.

Particularly preferably, the illuminating device in the form of a coarse-grained display device comprises at least one multicolored lighting device which is suitable for emitting light of a first color during a first time period and for emitting light of a second color during a second time period, the first color being different from the second color. This can be made possible, for example, as described above, by the lighting device having multiple color sub-regions suitable for producing light of different colors from each other. Alternatively, the color of the light generated by the lighting device during operation may depend, for example, on the current density used to operate the lighting device.

The use of lighting devices that are suitable for emitting light of different colors enables the illuminating device to be used as a coarse-grained display device that is particularly versatile.

According to at least one embodiment of the illuminating device, the carrier of the illuminating device contains a textile material. The lighting devices of the illuminating device are then at least mechanically connected to the carrier. The mechanical connection can, for example, be provided by a Velcro connection between the textile material

and a Velcro layer that is applied to the second main surface of the lighting device.

In addition, conductor tracks - for example thin metal wires - can be integrated into the textile material. The conductive tracks can, for example, be interwoven with the material of the carrier. These conductive tracks can be used to make electrical contact with the illuminating devices of the lighting device via the carrier. Alternatively, the lighting devices of the illuminating device can have their own power supply in the form of a battery, a rechargeable battery or a capacitor.

The lighting devices of the illuminating device with the carrier, which contains a textile material, are preferably flexible. In particular, the lighting devices are flexible in a similar way to the carrier. This means that the lighting devices can largely adapt to a deformation of the carrier to which they are attached - for example by folding.

According to at least one embodiment of the illuminating device, the carrier, which contains a textile material, is designed as a curtain. At least one - for example flexible - lighting device is then applied to the curtain. A large part of the surface of the curtain facing at least one lighting device may be covered by at least one lighting device.

When the curtain is drawn, the main surface of the curtain covered by at least one illuminating device forms the illuminating surface of the illuminating device.

For example, the curtain is positioned in front of a window. The curtain then forms an illuminating device whose illuminated area corresponds approximately to the area of the window covered by the curtain. In this way, the illuminating

device provides room lighting that corresponds to the window in terms of size and direction of light incidence. A room with such a curtain is preferably illuminated by the illuminating device with light similar to daylight.

According to at least one embodiment of the illuminating device, the carrier, which contains a textile material, is designed as a garment. At least one lighting device is mechanically attached to the garment. The mechanical connection can, for example, be provided by a Velcro connection between the textile material of the garment and a Velcro layer that is applied to the second main surface of the lighting device. The lighting device is preferably - as described above - flexible and has a flexibility that corresponds approximately to the flexibility of the garment. Preferably, as described above, the lighting device is suitable for generating light of at least two different colors. The lighting device can then serve as a signaling device enabling the wearer of the garment to visually display information. For this purpose, the lighting device is connected to a control device that can be adjusted by the wearer of the garment.

Alternatively or additionally, the control device can adjust the operating state of the lighting device - that is, for example, the color of the light emitted by the lighting device - depending on certain measured values. For this purpose, the illuminating device comprises at least one sensor that is suitable for determining body functions of the wearer of the garment, such as the pulse rate, the skin resistance and/or the body temperature of the wearer. Depending on the values determined, the control device then sets the operating state of the lighting device. The lighting device is then suitable for visually displaying information about the body functions of the wearer of the garment.

Furthermore, the illuminating device, the wearer of which is designed as a garment, can be used to improve the visibility of the person wearing the garment - for example in road traffic. Such a garment is particularly suitable for cyclists and pedestrians.

In addition, an optical display device is disclosed. The optical display device comprises an imaging element and at least two lighting devices according to at least one of the embodiments described above. The lighting devices form a backlighting device for the imaging element.

The backlighting device is preferably designed like at least one of the illuminating devices described further above.

According to at least one embodiment of the display device, the backlighting device of the display device comprises at least two lighting devices which are electrically and mechanically connected to each other. The lighting devices may be directly electrically and mechanically connected to each other. However, the lighting devices may also be electrically and mechanically connected to each other via a carrier of the backlighting device of the display device. As described above, the lighting devices of the backlighting device are then mechanically connected and/or electrically connected to each other and/or to a carrier via connection points, which can be in the form of connecting studs, connecting plugs, connecting pins, connecting holes or sockets.

The imaging element of the display device can be an LCD panel, for example. The imaging element is arranged directly downstream of the lighting devices of the backlighting device in their direction of radiation. This means that the imaging element is then directly backlit by the lighting devices. The modular design of the backlighting device for the imaging

element, consisting of two or more lighting devices, makes it possible to backlight a particularly large area. In this way, a particularly large display device can be realized. Furthermore, defective lighting devices of the backlighting device - due to the modular design of the backlighting device of the display device - can be replaced particularly easily.

According to at least one embodiment of the optical display device, at least one of the lighting devices of the display device is suitable for emitting white light during operation. Preferably, all of the lighting devices of the backlighting device of the display device are then suitable for emitting white light.

According to at least one embodiment of the display device, the light emitted by the lighting devices of the display device is mixed to produce white light during operation. This means that the display device then comprises, for example, lighting devices that are suitable for emitting green light, lighting devices that are suitable for emitting red light and lighting devices that are suitable for emitting blue light. These lighting devices are then preferably arranged in such a way that a white color impression is created by mixing the light from the individual lighting devices. For this purpose, an optical element comprising a diffuser can be arranged between the lighting devices and the imaging element. For example, the optical element is a diffuser plate which - as described above - is suitable for mixing the light generated by the lighting devices.

According to at least one embodiment of the illuminating device, the illuminating device comprises one of the lighting devices described herein as a first light source and a further second light source.

The lighting device is preferably designed in such a way that it is at least permeable to the light generated by the organic layer stack and to light from the second light source.

According to at least one embodiment, the second light source is an incandescent lamp, a light-emitting diode module - "LED module" for short, at least one individual light-emitting diode - "LED" for short, a cold cathode lamp, a lava lamp, a fluorescent lamp or an organic light-emitting diode - "OLED" for short.

An LED module comprises one or more LEDs arranged on a carrier. The carrier can be a printed circuit board, for example, such as a metal core board. Furthermore, an LED module can comprise beam-shaping optics that are arranged downstream of the LEDs in their direction of emission. The beam-shaping optics is, for example, at least partially formed in the manner of one of the following optical elements: compound parabolic concentrator (CPC), compound elliptic concentrator (CEC), compound hyperbolic concentrator (CHC). Furthermore, the beam shaping optics can be a lens.

According to at least one embodiment, the lighting device emits light of a first color and the second light source emits light of a second color different from the first color.

According to at least one embodiment, the lighting device is dimmable.

According to at least one further embodiment, the second light source is dimmable.

Dimming of the lighting device and of the second light source can be achieved, for example, by using a PWM circuit that

generates pulse-width modulated signals (PWM signals) or with a conventional dimmer.

According to at least one embodiment, the lighting device is flexible.

According to at least one embodiment, the lighting device is designed as a lampshade, which is arranged, for example, around or above the second light source.

According to at least one embodiment, the lighting device and the second light source are arranged relative to each other such that light from the second light source passes through the lighting device.

An illuminating device in which:

- the lighting device emits light of a first color and the second light source emits light of a second color different from the first color,
- at least one of the two light sources is dimmable, and
- the illuminating device and the second light source are arranged relative to one another in such a way that light from the second light source passes through the illuminating device,

is referred to below as a "color-changing illuminating device."

Preferably, the lighting device of the color-changing illuminating device is designed to be transparent to visible light, in particular to the light generated by the organic layer stack and to the light emitted by the second light source.

The color-changing illuminating device is suitable for emitting mixed-color light comprising light from the lighting device and light from the second light source. This offers the advantage that the color location and brightness of the illuminating device can be varied by varying the color and brightness of the lighting device and/or the second light source. Either the brightness of one of the light sources - lighting device or second light source - can be kept constant and the brightness of the other light source can be varied, or the brightness of both light sources can be changed. In this way, the color and brightness of the light from the illuminating device can be easily adapted to a specific situation or mood.

According to at least one embodiment of the color-changing illuminating device, the lighting device emits light from the yellow spectral range and the second light source emits light from the blue spectral range. It is also conceivable that the lighting device emits light from the blue spectral range and the second light source emits light from the yellow spectral range. This advantageously achieves a color-changing illuminating device that emits light with a color location in the white range of the CIE standard chromaticity diagram.

By varying the brightness of the second light source and/or the lighting device - i.e. by varying the color component of the blue light and the yellow light in the mixed-color light of the color-changing illuminating device - the color location of the mixed-color light of the color-changing illuminating device can be varied in wide ranges of the CIE standard chromaticity diagram and, in particular, adapted to a desired value. In particular, different shades of white of the mixed-color light can be set and adapted to the corresponding situation.

Furthermore, the lighting device and the second light source of a color-changing illuminating device can also have other different colors in addition to yellow and blue. If both light sources - lighting device and second light source - are dimmable, the color of the mixed-color light of the illuminating device can be smoothly adjusted from the color of the light of the lighting device to the color of the light of the second light source.

In particular, the lighting device can be designed as a multicolored lighting device with at least two color sub-areas, as described above. Such a multicolored lighting device enables a color-changing illuminating device that can, for example, produce a particularly large number of white tones and/or white light with a high color rendering index (CRI).

According to at least one embodiment of the color-changing illuminating device, the lighting device emits light of a first color from the warm white range of the CIE standard chromaticity diagram and the second light source emits light of a second color from the cool white range of the CIE standard chromaticity diagram. The lighting device can also emit light of a first color from the cold white range of the CIE standard chromaticity diagram and the second light source can emit light of a second color from the warm white range of the CIE standard chromaticity diagram. The color location of the mixed-color light of this color-changing illuminating device can be set between cold white and warm white. Such a color-changing illuminating device can be used as a light source in private homes, for example, where a rather cold white light is used in work situations, which can be quickly and easily changed to warm white light by the user during relaxation phases by dimming the cold white light source and increasing the warm white component of the mixed-colored light.

Particularly preferably, the lighting device of the color-changing illuminating device is designed as a lampshade. This is arranged around or above the second light source, for example. The lighting device is particularly preferably designed to be flexible.

According to at least one embodiment, the lighting device is designed to be flexible in such a way that the shape of the lighting device can be changed during use.

A color-changing illuminating device with a second light source that is mainly used for decoration, such as a lava lamp, is preferably used for decorative purposes, for example in bars or as floor lighting for dance floors.

Furthermore, color-changing illuminating devices can be used for medical purposes in light therapy.

According to at least one embodiment of the illuminating device, a light-emitting main surface of the lighting device and a light-emitting front surface of the second light source are arranged in a common plane. In this case, the second light source may be an LED module, for example, which is arranged within the radiation-emitting front surface of the lighting device. The LED module is particularly preferably arranged centrally within the main radiation-emitting surface of the lighting device. Such an arrangement can be used as a decorative element, for example.

A storage unit is also provided. The storage unit comprises a radiation-emitting component. In particular, the radiation-emitting component may be a lighting device according to at least one of the embodiments described herein. In particular, the storage furniture may also be an illuminating device according to at least one of the embodiments described herein.

In other words, the storage furniture may have any features of the lighting devices and illuminating devices described herein. In the following, embodiments are described which relate in particular to a piece of storage furniture. The lighting devices and illuminating devices described herein may also have any features of the pieces of storage furniture described herein.

In the case of a storage surface on which items or objects are positioned for storage or display, for example, it may be desirable to illuminate said items or objects in addition to being able to arrange them on the storage surface. The desire for lighting can have both functional and aesthetic reasons. For this purpose, an illuminating device is usually mounted in the area surrounding the storage surface, for example above or next to it, in such a way that the desired illumination of the storage surface and possibly also the surrounding area is achieved.

A piece of storage furniture according to one embodiment of the invention comprises in particular
- a flat storage element with at least one storage surface and at least one radiation-emitting component with an active area which emits electromagnetic radiation during operation, and
- at least one holding device for holding the storage element.

In particular, the storage surface can be used to position and/or store objects on it.

In a further embodiment, the radiation-emitting component has a flat shape. In this context, "flat" can mean that the radiation-emitting component extends contiguously over a surface area that has an area of at least several square millimeters, preferably several square centimeters and particularly preferably at least one or more square decimeters

or more. In particular, a surface-molded radiation-emitting component can have a surface area that is of the same order of magnitude as the deposit surface.

In a preferred embodiment, the radiation-emitting component is an organic radiation-emitting component, in particular an organic light-emitting diode (OLED). An OLED can have an organic layer or a layer sequence with at least one organic layer with an active area that can emit electromagnetic radiation during operation. Furthermore, an OLED can have a first electrode and a second electrode, whereby the organic layer or the layer sequence with at least one organic layer with the active area can be arranged between the first and second electrodes. The first and second electrodes can be suitable for injecting "holes" or electrons into the active area, which can recombine there by emitting electromagnetic radiation.

Furthermore, the first electrode can be arranged on a substrate. The organic layer or the layer sequence with one or more functional layers of organic materials can be applied over the first electrode. The functional layers, which can comprise the active area, can have electron transport layers, electroluminescent layers and/or hole transport layers, for example. The second electrode can be applied over the functional layers or over at least one organic layer.

For example, the substrate can comprise glass, quartz, plastic foils, metal, metal foils, silicon wafers or any other suitable substrate material. For example, the substrate can also be designed as a sequence of layers or a laminate of several layers. If the organic radiation-emitting device is designed as a so-called "bottom emitter," i.e. the electromagnetic radiation generated in the active area can be emitted through the substrate, the substrate can

advantageously have a transparency for at least part of the electromagnetic radiation.

According to at least one embodiment, at least one of the electrodes comprises or consists of a transparent conductive oxide, a metal or a conductive organic material.

In the Bottom-Emitter configuration, the first electrode may advantageously be transparent to at least a portion of the electromagnetic radiation. A transparent first electrode, which can be designed as an anode and can thus serve as a material injecting positive charges or "holes," can for example have a transparent conductive oxide or consist of a transparent conductive oxide. Transparent conductive oxides (TCO) are transparent, conductive materials, usually metal oxides such as zinc oxide, tin oxide, cadmium oxide, titanium oxide, indium oxide or indium tin oxide (ITO). In addition to binary metal-oxygen compounds, such as ZnO, SnO_2 or In_2O_3, ternary metal-oxygen compounds, such as Zn_2SnO_4, $CdSnO_3$, $ZnSnO_3$, $MgIn_2O_4$, $GaInO_3$, $Zn_2In_2O_5$ or $In_4Sn_3O_{12}$ or mixtures of different transparent conductive oxides also belong to the group of TCOs. Furthermore, the TCOs do not necessarily have to correspond to a stoichiometric composition and can also be p- or n-doped. Alternatively or additionally, the first electrode can also have a metal, for example silver.

The layer sequence with at least one organic layer may comprise polymers, oligomers, monomers, organic small molecules or other organic non-polymeric compounds or combinations thereof. In particular, it may be advantageous if a functional layer of the layer sequence is designed as a hole transport layer to enable effective hole injection into an electroluminescent layer or an electroluminescent region. Such structures relating to the active area or the other functional layers and areas are known to the skilled person, particularly

with regard to materials, composition, function and structure, and are therefore not explained in more detail here.

The second electrode can be designed as a cathode and thus serve as an electron-inducing material. In particular, aluminum, barium, indium, silver, gold, magnesium, calcium or lithium as well as compounds, combinations and alloys thereof can prove to be advantageous as cathode material. Additionally or alternatively, the second electrode can also be transparent. This means in particular that the OLED can also be designed as a "top emitter," which means that the electromagnetic radiation generated in the active area can be emitted on the side of the organic radiation-emitting component facing away from the substrate.

If an electrode comprising or consisting of the metallic layer is to be designed to be transparent to the light emitted by the organic layer stack, it can be advantageous if the metallic layer is sufficiently thin. Preferably, the thickness of such a semi-transparent metallic layer is between 1 nm and 100 nm, inclusive.

Furthermore, the first electrode can be designed as a cathode and the second electrode as an anode, whereby the organic radiation-emitting component can be designed as a bottom or top emitter. The organic radiation-emitting component can also be designed simultaneously as a top emitter and as a bottom emitter.

In addition, the organic radiation-emitting component can have an encapsulation in order to protect the electrodes and/or the functional area from moisture and/or oxidizing substances such as oxygen. The encapsulation can surround the entire organic radiation-emitting component including the substrate.

Alternatively, the substrate and/or at least one electrode can form part of the encapsulation.

Alternatively, the radiation-emitting component can be designed as an electroluminescent film. In this case, an active area comprising an inorganic material, for example based on zinc sulfide, can be arranged between a first and a second electrode. The electrodes can have features and structures as described in connection with the organic radiation-emitting components. The active area can have a suitable doping, such as copper or europium.

The electromagnetic radiation generated by the active area of the radiation-emitting component may in particular have a spectrum with wavelengths in an ultraviolet to infrared spectral range. In particular, it may be advantageous if the spectrum comprises at least one wavelength visible to an observer. The spectrum of electromagnetic radiation can advantageously also comprise several wavelengths, so that a mixed-color luminous impression can be created in an observer. To this end, the radiation-emitting component itself may be able to generate electromagnetic radiation with several wavelengths or some of the electromagnetic radiation generated by the organic radiation-emitting component or all of the electromagnetic radiation generated by the radiation-emitting component with a first wavelength, for example in a blue and/or green spectral range, may be converted into a second wavelength, for example in a yellow and/or red spectral range, by a wavelength conversion material. For this purpose, the active area can be followed by a layer or an area that has a wavelength conversion material. In particular, a wavelength conversion material can be structured in partial areas downstream of the active area, so that different colored luminous impressions can be created in different partial areas of the radiation-emitting device for an observer. Suitable

wavelength conversion materials and layers with wavelength conversion materials as well as their structuring are known to the skilled person with regard to their structure and function and are not explained in more detail here.

In a further embodiment, the first and/or the second electrode of the radiation-emitting component is structured, for example in the form of electrode strips, which can also run parallel to one another. In particular, this can mean that the first and/or the second electrode has sections that can be connected independently of each other to a current and/or voltage source. As a result, the radiation-emitting component can have different operating statuses depending on the contacting of the partial areas of the first and/or second electrode, i.e. different light patterns and light distributions of the radiation-emitting component can be generated. In addition, the active area of the radiation-emitting component, for example the organic layer or the layer sequence with at least one organic layer in the case of an organic radiation-emitting component, can have different materials in the different sub-areas of the first and/or second electrode and can also be structured, for example, so that the radiation-emitting component can emit electromagnetic radiation with different wavelengths in different operating statuses, for example. As a result, depending on the contact of the partial areas of the first and/or second electrode with a current and/or voltage source, a different-colored or even a mixed-colored luminous impression can be produced for an observer.

In particular, the first electrode can be structured so that it is formed as parallel strips. Groups of parallel strips can form sub-areas that can be connected independently of each other to a current and/or voltage source. Alternatively or additionally, the second electrode can also be structured in this way. Preferably, the first and second electrodes can each

be structured as parallel strips, whereby the parallel strips of the first electrode can be perpendicular to the parallel strips of the second electrode. Alternatively, the strips of the first electrode and the strips of the second electrode can also be parallel to each other. In this case, the first and/or the second electrode can each have independent sub-areas of parallel strips, so that multiple illumination patterns can be generated. Furthermore, the first electrode can also be flat and the second electrode can be structured in the form of pictograms or vice versa, so that the lighting impression can be perceived by an observer in conjunction with a pictorial impression.

In a further embodiment, the storage element may have at least partial areas that are transparent to the electromagnetic radiation generated by the radiation-emitting component. In a preferred embodiment, "transparent" may mean that a transparent element or component is transparent to at least a portion of the spectrum of the emitted radiation of the organic radiation-emitting component. Preferably, "transparent" can also mean transparent for the entire spectrum. A storage element with at least transparent partial areas can, for example, have glass or transparent plastic or also be made of glass or a transparent plastic. Alternatively, the storage element can have at least partial areas that are opaque for the electromagnetic radiation generated by the radiation-emitting component. For this purpose, the storage element can have opaque glass, an opaque plastic, metal or wood or a combination thereof or be made of such materials or a combination thereof.

In a further embodiment of the invention, the radiation-emitting component can be part of the storage element and can, for example, be integrated into the flat-shaped storage element. In this case, the radiation-emitting component may be

arranged inside the storage element and emit the electromagnetic radiation emitted during operation to the outside via one of the outer surfaces of the storage element. These outer surfaces are then at least partially transparent to the electromagnetic radiation generated by the organic radiation-emitting component.

In a particularly preferred embodiment, the depositing element has a glass substrate, on which the radiation-emitting component is mounted, and a further glass plate, which is arranged on the side of the organic radiation-emitting component facing away from the glass substrate and which can, for example, enable encapsulation or part of an encapsulation for the radiation-emitting component. The side of the glass substrate facing away from the radiation-emitting component or the side of the glass plate facing away from the radiation-emitting component can have the storage surface. Alternatively, the storage element can also have a plastic substrate and/or a plastic plate.

In particular, the storage element can be designed as a substrate for a radiation-emitting component. Alternatively, an organic radiation-emitting component with a substrate can be applied to the storage element. Alternatively or additionally, the encapsulation of the radiation-emitting component can also be designed as a storage surface. In particular, the radiation-emitting component can have a radiation exit surface for the electromagnetic radiation generated in the active area. This exit surface can be at least a part of an outer surface of the storage element. The outer surface may be the storage surface. This can mean that objects that can be arranged on the storage surface can be illuminated from the storage surface. Alternatively or additionally, the outer surface can also be, for example, a side of the storage element that is different from the storage

surface. Alternatively or additionally, the exit surface can also be an outer surface that is arranged on a side facing away from the storage surface. This can mean that areas or objects located on the side facing away from the storage surface can be illuminated.

In a further embodiment, the storage element has a top side, a bottom side and side surfaces. The organic radiation-emitting component can be attached to at least one of the top side, the bottom side and the side surfaces.

In a further embodiment, a holding device has, for example, a rail, a holding bracket, a support arm, a strut, a post, a furniture wall or a combination thereof. In particular, the holding device can also have several of the aforementioned elements or a combination thereof. In addition, a holding device can also have a radiation-emitting component.

In a further embodiment, the storage element has holding elements by means of which the storage element can be mounted on the holding device. In one embodiment, "mountable" can mean that the storage element can be rigidly attached to the holding device. By way of example only, a screw, clamp or plug-in connection as well as hanging or gluing are mentioned for rigid attachment. Alternatively or additionally, "mountable" can also mean that the storage element is arranged on the holding device in such a way that it is not rigidly attached. By way of example only, it may be mentioned that the storage element can be placed on the holding device or a part of the holding device. In particular, the retaining elements can have or be, for example, hooks, eyelets, rails, openings, holes, threads or bearing surfaces or combinations thereof.

In a further embodiment, the storage element has at least two electrical contacts for making electrical contact with the

radiation-emitting component. At least two electrical contacts can preferably be suitable for contacting the first and/or the second electrode. Particularly preferably, the first and the second electrode or partial areas of the first and/or second electrode are contacted by different electrical contacts. Furthermore, an electrical line may be required for the electrical contacting of an electrical contact with an electrode or a partial area of a structured electrode. The electrical contacts can, for example, be strip-shaped, round or n-shaped, where n is an integer greater than or equal to 3.

In a preferred embodiment, the holding elements comprise the electrical contacts. This makes it possible, for example, to realize the mounting of the storage element and the electrical contacting of the radiation-emitting component in a space-saving, compact and/or aesthetically pleasing manner.

In a further embodiment, the holding device has holding parts to which the storage element can be mounted by means of its holding elements on the holding device. The holding parts can, for example, have or be hooks, eyelets, rails, shims, pins, screw, plug or clamp connections or angle connectors or combinations thereof.

In a further embodiment, the holding device has at least two electrical supply contacts for electrically contacting the organic radiation-emitting component, wherein the electrical contacts of the storage element are electrically connected to the electrical supply contacts when the piece of storage furniture is assembled or mounted. The mounting parts particularly preferably comprise the electrical supply contacts.

In further embodiments, the electrical contacts and the electrical supply contacts can, for example, be designed as

mating parts of plug-in, clamp or screw connections. In particular, this can enable reliable and stable electrically conductive contacting of the radiation-emitting component. Alternatively, the electrical contacts and/or the electrical supply contacts can also be designed as flat contact surfaces or have spring elements.

In a further embodiment, the storage element can have an n-cornered shape, where n is an integer greater than or equal to 3. Particularly preferably, the storage element can have a square or rectangular shape. Furthermore, the shape can also be circular or elliptical, for example, or a combination of the aforementioned shapes. In particular, the storage surface of the storage element may have one of the aforementioned shapes or a combination thereof, in this case particularly preferably, for example, a square or a rectangular shape with rounded corners. A retaining element and/or an electrical contact may be arranged in each or at least one corner of the storage element or the storage surface. In particular, the storage furniture can have a holding device in each or at least one corner of the storage element or the storage surface or can be connected to a holding device.

In particular, the holding device can be suitable for holding the storage element in such a way that at least partial areas of the storage surface are parallel to a floor above which the storage element can be arranged. For example, the storage unit can be placed or set up on the floor for this purpose. Alternatively or additionally, the holding device may be suitable for holding the storage element in such a way that at least partial areas of the storage surface are essentially perpendicular to a wall on or in front of which the storage furniture can be mounted or placed. In this context, "essentially perpendicular" can mean that the storage surface should be at such an angle to the wall that objects arranged

on the storage surface can remain on it. Since the wall may not be completely parallel to the direction of gravity, it may therefore be necessary for the angle between the wall and the storage surface to deviate from 90 degrees to a comparable extent.

In a further embodiment, the storage furniture has multiple storage elements. Such storage furniture can be, for example, a shelf or a cabinet with several storage elements. In particular, it may be possible for a radiation-emitting component of a storage element to illuminate the storage surface of another storage element arranged below it, for example. The multiple storage elements can be arranged in such a way that the storage surfaces of the respective storage elements are arranged parallel to each other.

Furthermore, the storage element can either form a base of a piece of storage furniture or be enclosed by it. This makes it possible, for example, for objects that are positioned below or laterally offset to the piece of storage furniture to be illuminated by the radiation-emitting component.

A storage element can be, purely by way of example, a shelf for a rack, a cupboard or a chest of drawers, or also a drawer base, a cupboard base or a wall-mountable shelf. In this respect, a piece of storage furniture can be, for example, a shelf, a cabinet, a chest of drawers, a drawer, a kitchen cabinet, in particular a wall-mountable kitchen wall unit, a piece of bathroom furniture or a book shelf.

The invention is explained in more detail below with reference to examples of embodiments and the associated figures.

Figure 1 shows a schematic sectional view of an organic layer stack between a first and a second electrode according to an embodiment example,

Figure 2A shows a schematic sectional view of a lighting device according to an embodiment example,

Figure 2B shows a schematic perspective view of an electrode according to an embodiment example,

Figure 2C shows a schematic sectional view along line A-A' of figure 2B,

Figure 3 shows a schematic sectional view of a thin-film encapsulation,

Figure 4A shows a schematic sectional view of a lighting device according to a further embodiment example,

Figure 4B shows a schematic top view of the substrate of the lighting device according to Figure 4A,

Figure 4C shows a schematic sectional view of a lighting device according to a further embodiment example,

Figure 4D shows a schematic top view of the substrate of a lighting device according to Figure 4C,

Figure 5A shows a schematic sectional view of a lighting device according to a further embodiment example,

Figure 5B shows a schematic view of the structure of a translucent lighting device,

Figure 6 shows a schematic perspective view of a door according to an embodiment example,

Figure 7 shows a schematic perspective view of a shop window according to an embodiment example,

Figure 8 shows a schematic perspective view of the front of a motor vehicle according to an embodiment example,

Figure 9 shows a schematic perspective view of a museum room according to an embodiment example,

Figure 10 shows a schematic sectional view of a lighting device according to an embodiment example,

Figure 11 shows a schematic perspective view of a room with a room divider according to an embodiment example,

Figure 12A shows a schematic sectional view of a display with a lighting device according to an embodiment example,

Figure 12B shows a schematic top view of a television set,

Figure 13A shows a schematic perspective view of a shelf according to an embodiment example,

Figure 13B shows an enlarged section of Figure 13A,

Figure 14 shows a schematic sectional view of a reflective display according to an embodiment example,

Figure 15 shows a schematic sectional view of a lighting device according to an embodiment example,

Figure 16 shows a schematic sectional view of a lighting device according to a further embodiment example,

Figure 17A shows a schematic sectional view of a thin-film encapsulation according to an embodiment example,

Figure 17B shows a schematic sectional view of a reflective encapsulation according to an embodiment example,

Figure 17C shows a schematic sectional view of a thin-film encapsulation according to a further embodiment example,

Figure 18A shows a schematic perspective view of a motor vehicle mirror according to an embodiment example,

Figure 18B shows a schematic perspective view of the motor vehicle mirror according to Figure 18A,

Figure 19 shows a schematic perspective view of a multi-part mirror according to an embodiment example,

Figure 20 shows a schematic perspective view of a multi-part mirror according to a further embodiment example,

Figure 21 shows a schematic perspective view of a search mirror according to an embodiment example,

Figure 22 shows a schematic perspective view of a make-up mirror according to an embodiment example,

Figure 23 shows a schematic top view of a decorative element according to an embodiment example,

Figure 24 shows a schematic perspective view of a mirror according to a further embodiment example,

Figure 25 shows a schematic sectional view of a flexible lighting device according to an embodiment example,

Figure 26 shows a schematic sectional view of a flexible lighting device according to a further embodiment,

Figure 27 shows a schematic sectional view of a lighting device according to an embodiment example,

Figure 28A shows a schematic top view of a window with a blind according to an embodiment example,

Figure 28B shows a schematic sectional view through a slat of the blind of Figure 28A,

Figure 29A shows a schematic view of a window covered by a curtain according to an embodiment example,

Figure 29B shows a schematic sectional view of the curtain according to Figure 29A,

Figure 29C shows a schematic sectional view of a curtain according to a further embodiment,

Figure 30 shows a schematic view of a window with a curtain according to a further embodiment example,

Figure 31 shows a schematic sectional view of a lighting device according to an embodiment example,

Figure 32 shows a schematic perspective view of a piece of furniture according to an embodiment example,

Figure 33 shows a schematic perspective view of a flexible lighting device according to an embodiment example in a rolled-up state,

Figure 34A shows a schematic representation of an illuminating device according to an embodiment example,

Figure 34B shows a schematic sectional view of the illuminating device of figure 34A along the sectional line A-A',

Figure 35A shows a schematic top view of a lighting device according to an embodiment example,

Figure 35B shows a schematic sectional view of the lighting device according to figure 35A along the sectional line A-A',

Figure 35C shows a schematic top view of a multicolored lighting device according to an embodiment example,

Figure 36 shows a schematic sectional view of a lighting device according to a further embodiment,

Figure 37 shows a further schematic sectional view of a multicolored lighting device according to a further embodiment example,

Figure 38 shows a schematic top view of first and second electrodes according to a further embodiment example of a multicolored lighting device,

Figure 39 shows a schematic top view of a multicolored lighting device according to a further embodiment example,

Figure 40A shows a schematic top view of an illuminating device according to an embodiment example,

Figure 40B shows a schematic sectional enlargement of Figure 40A,

Figure 41 shows a schematic top view of a lighting device according to a further embodiment example,

Figure 42 shows a schematic sectional view of a lighting device according to a further embodiment example,

Figure 43 shows a schematic sectional view of a further lighting device according to a further embodiment example,

Figure 44 shows a schematic top view of a further embodiment example of a lighting device,

Figure 45 shows a schematic sectional view of a lighting device according to a further embodiment example,

Figure 46 shows a schematic perspective view of the lighting device according to Figure 45,

Figure 47 shows a schematic representation of the CIE standard color chart,

Figure 48A shows a schematic representation of a flux indicator according to an embodiment example with a multicolored lighting device,

Figure 48B shows a schematic representation of the lighting device according to Figure 48A together with a control device,

Figure 49 shows a schematic sectional view of a lighting device according to an embodiment example,

Figure 50 schematically shows another possible use of a multicolored lighting device,

Figure 51 shows a schematic perspective view of the use of multicolored lighting devices,

Figure 52 shows a schematic perspective view of a lighting device according to an embodiment example,

Figure 53 shows a schematic representation of a connection point according to an example embodiment, such as may be used in the lighting device of Figure 52,

Figure 54 shows a further schematic perspective view of a connection point according to an embodiment example, such as may be used in Figure 52,

Figure 55 shows a schematic top view of a connection point as it may be used in the lighting device of the embodiment example of Figure 52,

Figure 56 shows a schematic perspective view of a lighting device according to a further embodiment example,

Figure 57 shows a schematic perspective view of a lighting device according to a further embodiment example,

Figure 58 shows a schematic top view of a connection point according to an example embodiment, as may be used in the lighting device of figure 57,

Figure 59 shows a further schematic top view of a connection point according to an example of an embodiment, such as may be used in the lighting device of Figure 57,

Figure 60 shows a schematic top view of a further embodiment of the connection point, as may be used in the lighting device of Figure 55,

Figure 61 shows a schematic perspective view of a lighting device according to a further embodiment example,

Figure 62A shows a further schematic perspective view of a lighting device as shown in an example,

Figure 62B schematically shows an enlarged section of Figure 62A,

Figure 63A shows a schematic top view of a lighting device according to a further embodiment example,

Figure 63B shows a schematic sectional enlargement of a

connection point of the lighting device according to Figure 63A,

Figure 64 shows a schematic top view of an illuminating device according to an embodiment example,

Figures 65 and 66 show schematic perspective views of an illuminating device according to a further embodiment example,

Figures 65 and 67 show schematic representations of a further illuminating device according to an embodiment example,

Figure 68 shows a schematic diagram of a switching sketch according to an embodiment example,

Figure 69 shows a schematic diagram of a switching sketch according to an embodiment example,

Figure 70 shows a further schematic circuit diagram according to a further embodiment example,

Figure 71 shows a schematic representation of an illuminating device according to a further embodiment example,

Figure 72 shows a schematic perspective view of an illuminating device according to a further embodiment example,

Figure 73 shows a schematic perspective view of an illuminating device according to a further embodiment example,

Figure 74 shows a schematic perspective view of an illuminating device according to a further embodiment example,

Figure 75 shows a schematic perspective view of a display device according to an embodiment example,

Figure 76 shows a schematic top view of a coarse-grained display according to an embodiment example,

Figure 77 shows a schematic view of a bathroom according to an embodiment example,

Figure 78 shows a schematic perspective view of an illuminating device with a lighting device and a second light source according to an embodiment example,

Figure 79 shows a schematic perspective view of an illuminating device with a lighting device and a second light source according to a further embodiment example,

Figure 80A shows a schematic perspective view of an illuminating device according to a further embodiment example,

Figure 80B shows a schematic sectional view of the illuminating device of Figure 80A,

Figure 81 shows a schematic top view of an illuminating device according to a further embodiment example,

Figure 82 shows a schematic perspective view of an illuminating device with a lighting device and a second light source according to a further embodiment example,

Figure 83 shows a schematic perspective view of an illuminating device with a lighting device and a second light source according to an embodiment example,

Figures 84A to 84C show schematic representations of a storage element and a storage unit according to an example of an embodiment,

Figure 85 shows a schematic representation of a storage element according to a further embodiment example,

Figure 86 shows a schematic representation of a storage element according to a further embodiment example,

Figure 87 shows a schematic representation of a storage element according to a further embodiment example,

Figure 88 shows a schematic representation of a storage unit according to a further embodiment example,

Figures 89A to 89E show a schematic representation of storage furniture according to further embodiments.

In the design examples and figures, components that are identical or have the same effect are each marked with the same reference symbols. The elements shown are not to be regarded as true to scale; rather, individual elements may be shown in exaggerated size for better understanding.

Figure 1 shows a schematic sectional view of an organic layer stack 4 between a first electrode 2 and a second electrode 3 according to an embodiment example. The first electrode is transparent to visible light and has a TCO (transparent

conductive oxide), for example ITO (indium tin oxide). Furthermore, the first electrode 2 serves as an anode. The second electrode 3 serves as the cathode. It consists of aluminum or silver, for example.

An organic layer stack 4 with the following layers is applied to the first electrode 2, whereby the order of the layers listed below corresponds to their order within the organic-layer stack starting from the cathode: a 1-TNATA layer (1-TNATA = 4,4',4''- tris(N(naphth-l-yl)-N-phenyl amino)triphenylamine) with a thickness of approximately 40 nm, a sp-TAD layer (spTAD= 2,2',7,7'-diphenylamino-spiro-9,9'-biflouren) with a thickness of approximately 20 nm, a SEB-010:SEB020 layer with a thickness of about 10 nm, a TMM-004:Ir(ppy)3(15%) layer (Irppy = fac-tris(2-phenly-pyridyl)iridium complex) with a thickness of about 10 nm and a TMM-04:TER012 layer with a thickness of about 30 nm. This organic layer stack is suitable for emitting white light.

Figure 2A shows a schematic sectional view of a lighting device according to an embodiment example. The lighting device comprises a substrate 1 having a first main surface 101, to which the first electrode 2 is applied within an active region 5 of the substrate 1. An organic layer stack 4 with at least one layer 401 suitable for generating light is arranged on the first electrode 2, to which the second electrode 3 is applied. In the present case, the first electrode 2 on the substrate 1 is the anode and the second electrode 3 on the organic layer stack 4 is the cathode. On its outer side facing the cathode, the organic layer stack 4 has a doped layer 402 with a dopant 410, which acts as an electron donor. This advantageously increases the injection of electrons from the cathode into the organic layer stack. The dopant 410 can be for example cesium, barium or lithium fluoride.

Furthermore, the lighting device according to Figure 2A comprises a thin-film encapsulation 6. The active area 5 with the organic layer stack 4 is arranged within the thin-film encapsulation 6. The thin-film encapsulation 6 is applied directly to the second electrode 3. A thin-film encapsulation, as may be used, for example, in the lighting device of Figure 2A, is described, for example, in connection with Figure 3.

The lighting device according to Figure 2A is designed to be transparent to visible light, in particular to light generated by the organic layer stack 4. For this purpose, the substrate 1 is designed to be transparent to visible light. It can, for example, be made of glass or plastic or consist of such. For example, a thin glass plate or a flexible plastic film comprising or consisting of one of the plastic materials listed in the general description section can be used as the substrate.

The first electrode 2 on the substrate is also transparent to visible light. The first electrode 2 can, for example, consist of or have a TCO. The organic material of the organic layer stack 4 is generally transparent to visible light. In particular, the doped layer is transparent to visible light. The organic layer stack 4 can, for example, comprise the layers of the organic layer stack of Figure 1. The second electrode 3 is also transparent to visible light, in particular to light generated by the organic layer stack 4. The second electrode 3 is designed as a cathode. This can, for example, have a metallic layer that contains aluminum or silver and has a thickness of approximately 30 nm.

Furthermore, an electrode 2, 3, which is transparent to visible light, can comprise or consist of a conductive organic material. For example, PEDOT:PSS is suitable as an organic electrode material. PEDOT:PSS can, for example, form the

anode. In the case of a suitable conductivity doping, however, it is also possible that the cathode consists of PEDOT:PSS or contains this material.

If the conductivity of the electrode material, in particular the organic material, is not sufficient to inject enough charge carriers into the organic layer stack, thin metal tracks can be arranged between the electrode and the organic layer stack.

Figure 2B shows a schematic perspective view of an electrode 2 according to an embodiment example, which comprises a layer with organic conductive material and thin metal tracks 201 arranged between the organic electrode layer 202 and the organic layer stack 4. Figure 2C shows a schematic sectional view along the line AA' of Figure 2B.

In the present embodiment, the metal tracks 201 are in the form of a grid. The thickness of the metal tracks is preferably a few µm. The distance between directly adjacent grid points is preferably between 1 mm and 100 mm, inclusive.

Furthermore, the electrically conductive tracks 201 have a multilayer structure, for example with three metallic tracks, as shown in Figure 2C. The two outer layers 2011, 2012 are protective layers for the middle layer 2013, for example against corrosion. They can, for example, have chromium, molybdenum, copper or silver or consist of one of these materials. The middle layer 2013 of the multilayer structure can, for example, have aluminum or consist of aluminum.

The multilayer structure preferably has a thickness of at least 50 nm and at most 100 nm.

Furthermore, the thin-film encapsulation 6 of the lighting device according to Figure 2A is also designed to be transparent to visible light, in particular to light generated by the organic layer stack 4. A schematic sectional view through a thin-film encapsulation 6, such as can be used according to Figure 2A, is shown in Figure 3. In the present case, the thin-film encapsulation 6 comprises two first barrier layers 601, which comprise silicon oxide or consist of silicon oxide, and two second barrier layers 602, which comprise silicon nitride or consist of silicon nitride. The first barrier layers 601 and the second barrier layers 602 of the thin-film encapsulation 6 are arranged alternately in terms of their material composition. The thin-film encapsulation 6 preferably has a thickness of between 0.5 and 5 pm, inclusive.

The barrier layers can, for example, be vapor-deposited, sputtered or deposited on the second electrode using a plasma-enhanced process such as chemical vapor deposition (CVD). The barrier layers preferably have a thickness of at least 30 nm to at most 300 nm each. A single barrier layer is particularly preferably around 100 nm thick. Preferably, a thin-film encapsulation comprises at least two to at most eight barrier layers. Typically, the thin-film encapsulation comprises three or four barrier layers.

The thin film encapsulation may further comprise intermediate polymer layers as described with reference to Figure 17 further below in the text.

A protective coating layer 603 is also applied to the barrier layers. The protective coating layer 603 may be applied, for example, by spin-coating, spraying, doctoring, screen printing or similar techniques. After application, the protective coating layer 603 is cured by applying heat or UV radiation.

Suitable materials for the protective coating layer 603 are acrylates, polyacrylates, polyimides and similar materials. The thickness of the protective coating layer is, for example, between at least 30 and at most 40 µm.

The lighting device of Figure 2A is suitable for emitting light simultaneously from a top side and from a bottom side opposite the top side, since the light generated in the organic layer stack 4 only passes through elements that are transparent to visible light on its way to the top side and to the bottom side.

Figure 4A shows a schematic sectional view of a lighting device according to a further embodiment. The lighting device according to Figure 4A has a substrate 1 with an active area 5 to which a first electrode 2 is applied. An organic layer stack 4 with at least one layer 401 suitable for generating light is arranged on the first electrode 2. A further, second electrode 3 is arranged on the organic layer stack 4. The substrate, the first and second electrodes and the organic layer stack are in the present case transparent to visible light, in particular to light generated by the organic layer stack 4, as already described, for example, with reference to Figure 2A.

The active area 5 of the substrate 1, on which the organic layer stack 4 is arranged between the first electrode 2 and the second electrode 3, is surrounded by an attachment area. Within the attachment area 8, the substrate 1 comprises electrically conductive supply leads 9 which are electrically conductively connected to the first electrode 2 and the second electrode 3. The leads 9 to the first electrode 2 may, for example, be structures of the first electrode 2 that are extended into the attachment area 8. In this case, the electrical leads 9 generally have the same material as the

first electrode 2. The leads 9 to the second electrode 3 are in the present case electrically conductively connected to a further electrode structure 901 within the active region 5 of the substrate 1, which is electrically insulated from the first electrode 2, for example by the leads 9 also being formed by extensions of the further electrode structure 901 into the attachment region 8. The second electrode 3 on the organic layer stack 4 is electrically conductively connected to the further electrode structure 901, for example by means of a through-plating 900.

Within the attachment area 8, an adhesive layer 610 is arranged over the electrical leads 9, with which a cap serving as an encapsulation 6 is attached to the substrate. The cap has a cavity above the active area 5, in which the active layer stack 4 is arranged. In the present case, the cap is not in direct contact with the second electrode 3. Furthermore, the cap, like the substrate 1, the first electrode 2 and the second electrode 3 and the organic layer stack 4, is also transparent to visible light, in particular to light generated by the organic layer stack 4. For example, it can be formed from glass or one of the translucent plastics already mentioned in connection with the substrate 1 in the general description section.

A getter layer 611, which is transparent to visible light, is applied to the inside of the cap facing the organic layer stack. For example, one of the materials described above can be used as the getter material. Particles of a getter material - for example calcium oxide - that are embedded in a transparent matrix are particularly suitable for a transparent getter layer 611. Solvent-free, curable plastic materials are suitable for the matrix, for example. The getter layer 611 preferably has a thickness of at most 300 µm, particularly preferably between at least 50 and at most 100 µm.

The electrical supply lines 9 on the substrate 1 are electrically conductively connected to a control device 11.

Figure 4B shows a schematic top view of the substrate 1 as shown in Figure 4A. The first electrode 2 and the further electrode structure 901 are arranged within the active area 5. To the side of the active area 5 within the attachment area 8 are respective electrical supply lines 9, which are grid-shaped in the present case. The electrical leads on one side of the substrate 1 are extensions of the further electrode structure 901, while the electrical leads 9 on the other side of the substrate are extensions of the first electrode 2. In the present case, the electrical leads comprise a TCO, for example ITO.

Furthermore, it is also possible that the electrical leads 9 comprise or consist of a metal. For example, the leads 9 contain or consist of at least one of the following materials or combinations of materials: Cr/Al/Cr, Cu/Cr, Mo/Al/Mo; Cr, Cu, Al, Ag, Au, Pt.

If the electrical leads 9 are made of metal, the fill level of the grid is generally so low that the electrical leads are not visible to an observer. In this way, the electrical leads 9 can advantageously be made permeable to visible light.

The filling level of the grid is preferably less than 10%, particularly preferably less than 2%.

The electrical leads 9 are electrically connected to electrical connection points 70, in this case pins 75, which are arranged on the side of the substrate 1. The pins 75 can be used to electrically connect the lighting device to a socket or, as shown in Figure 4A, to the control device 11.

Figure 4C shows a schematic sectional view of a lighting device 100 according to a further embodiment example. Figure 4D shows a schematic top view of the substrate of the lighting device according to Figure 4C. The lighting device 100 corresponds to the lighting device of Figures 4A and 4B except for the differences described below.

In contrast to the lighting device of Figures 4A and 4B, the organic layer stack 4 has no through-plating. Furthermore, the substrate does not comprise any further electrode structure.

Instead, the first electrode 2 is formed over the entire surface below the organic layer stack 4 within the active area 5 on the substrate 1. On one side of the active area 5 within the attachment area, electrical leads 9 are arranged, which are electrically conductively connected to the first electrode 2. These electrical leads 9 may, for example, be continued structures of the first electrode 2. On the other side, electrical leads 9 are attached to the substrate 1, and are not electrically connected to the first electrode 2. Furthermore, the electrical leads on this side comprise a bond pad 903, on which a bond wire 902 is arranged, which is electrically conductively connected to the second electrode 3.

Figure 5A shows a schematic sectional view of a lighting device 100 according to a further embodiment example. The lighting device 100 comprises a window glazing as substrate 1. A first electrode 2 is applied to the substrate, to which an organic layer stack 4 with at least one layer 401 suitable for generating light is also applied. The organic layer stack 4 may, for example, be a layer stack 4 as already described with reference to Figure 1. A second electrode 3 is applied to the organic layer stack 4. As encapsulation 6, the lighting device according to Figure 5A comprises a second window glazing which is bonded to the second electrode 3 with an adhesive layer

610. A transparent adhesive, for example, is suitable as an adhesive. This adhesive is preferably also transparent to visible light. Suitable adhesives are, for example, nagase or three-bond.

Substrate 1, electrodes 2, 3, encapsulation 6, organic layer stack 4 and adhesive layer 610 are transparent to visible light. The light source 100 is therefore suitable for emitting light from its upper side 100a and its lower side 100b. Furthermore, an observer can see through the illuminant 100 when it is not in operation. The light source is therefore suitable for use as glazing, for example in doors, windows, room dividers, furniture or the like, whereby the glazing can serve as a source of illumination.

Figure 5B shows a schematic representation of the structure of a lighting device 100 that is essentially transparent to visible light and is integrated into a glazing. The substrate 1 in the present case is a glass pane with an active area 5 to which a first electrode 2 is applied. In the present case, the electrode is also transparent to visible light and comprises a TCO, for example ITO. In order to display certain shapes, for example a lettering or a logo, the first electrode 2 is structured according to the desired shape, in this case in the lettering "Info 1."

Within the active area, an organic layer stack 4, for example as already described in Figure 1, is applied to the first electrode. A second electrode 3, which is also permeable to visible light and serves as a cathode in the present case, is applied to the organic layer stack. The second electrode 3 is applied over the entire surface of the organic layer stack 4. However, it is also conceivable that the first electrode 2 is applied over the entire surface of the substrate and the second electrode 3 is applied to the organic layer stack 4 in

the shape that is to form the luminous surface of the lighting device. A second glass pane is applied to the second electrode 3 as encapsulation 6. The dimensions of the encapsulation 6 are preferably the same as the dimensions of the substrate 1. In this way, a glazing with a lighting device 100 is created, the illuminated surface of which is formed in the desired manner, for example in the form of lettering or a logo.

The second glass pane, which serves as encapsulation 6, can be attached to the substrate, for example by means of an adhesive layer 610 that is transparent to visible light. The adhesive layer 610 can be applied over the entire surface of the substrate and the second glass pane, or only within an attachment area 8 outside the active area 5.

The active area 5 can be contacted, for example, by means of electrically conductive leads 9, as described with reference to Figures 4A to 4D.

Figure 6 shows a schematic perspective view of a door 300 according to an embodiment example. The door 300 has two door leaves 301 which are designed to be permeable to visible light. These include glass, for example, or are formed from glass. A lighting device 100 is integrated into each door leaf 301, which is designed to be transparent to visible light. With the aid of the lighting devices 100, the illuminated surface of which in the present case forms an inscription, illuminated signposts can be integrated into doors 300. Such doors 300 with illuminated signposts can be used, for example, in museums, congress centers, hotels or the like. In the present case, the lighting device can either be integrated into the door 300, as already described with reference to Figures 5A and 5B, or the lighting devices 100 can also be flexible lighting devices that are transparent to visible light and are attached to the door, for example with a layer

of adhesive. A flexible lighting device that is suitable for being glued on is described, for example, in connection with Figure FM9.

If the lighting devices 100 are integrated into the door 300, electrical leads 9 may be applied to the substrate 1, i.e. the window glazing to which the first electrode 2 is applied, as already described, for example, in connection with Figures 4A to 4D. The electrical leads 9 can, for example, be electrically conductively connected to connection points 70, which are formed as parts of the door hinges, where the electrically conductive parts extend inside the door hinges. The door hinges can in turn be connected to electrical cables that run inside the door frame.

Further shown in Figure 6 is an emergency lighting 395 comprising a lighting device 100 or an illuminating device 1000 described herein. The emergency lighting 395 is activated, for example, in the event of a power failure and comprises an autonomous power supply or is supplied with the necessary operating current by an emergency power generator. The lighting devices 100 and illuminating devices 1000 described here are particularly suitable for use as emergency lighting, as they can generate light of sufficient brightness with relatively low power consumption.

Figure 7 shows a schematic perspective view of a shop window according to an embodiment example with four lighting devices 100, which are designed to transmit visible light.

The lighting devices can be used to display brand names "Trademark 1" and "Trademark 2" and logos "Logo 1" and "Logo 2." As already described in connection with Figures 5A and 5B, the lighting devices 100 can be lighting devices that are integrated into the glazing of the shop window or a flexible

lighting device that is glued to the inside of the glazing with a layer of adhesive.

Figure 8 shows a schematic front view of a motor vehicle 310 according to an embodiment example. Two lighting devices 100 are integrated into a window 20, for example the windshield, which are designed to transmit visible light and are suitable for displaying information "Info 1" and "Info 2" for the driver. Alternatively, it is also possible - as already described in connection with Figures 7 and 6 - that the two lighting devices 100 are flexible and are glued to the windshield from the inside.

Figure 8 further shows a vehicle interior lighting 396. The vehicle interior lighting is formed, for example, by a lighting device 100 described here or an illuminating device 1000 described here.

Figure 9 shows a schematic perspective view of a museum room whose ceiling elements 320 comprise glazing. The glazing of a ceiling element has a lighting device 100 or an illuminating device 1000 over part or its entire surface, which is permeable to visible light. The glazing may, for example, be a glazing with an integrated lighting device 100, as already described with reference to Figures 5A and 5B. Alternatively, the lighting device can also be applied to the inside of the glazing, for example by bonding.

The glazing of the ceiling elements of the museum room as shown in Figure 9 is therefore suitable for illuminating the room during the day using daylight. In poor lighting conditions, for example at night, the lighting devices 100 of the glazing can be used as additional light sources for the room. The glazing of the ceiling elements of the museum room in Figure 9 can also be designed to be milky. For this

purpose, either the glazing that serves as a substrate or the glazing that serves as encapsulation, or both, can be made milky.

Figure 10 shows a schematic sectional view of a lighting device 100 according to an embodiment example. In the lighting device 100 according to Figure 10, the encapsulation 6 and substrate 1 are formed as glazing, as for example in the lighting device according to Figures 5A and 5B. Such glazing can, for example, serve as a window pane of a window 20, but also of a door 300 or of a piece of furniture. During the day, such glazing can be used as a window 20, i.e. visible light from outside can enter the room unhindered. At night, the lighting device 100 can be activated so that the glazing serves as a source of illumination for the room. Furthermore, a mirror blind 22 is provided on the outside of the glazing to protect privacy and prevent uninvited glances from outside. In addition, the mirror blind 22 is suitable for reflecting light emitted by the lighting device 100. Due to the back reflection by the mirror blind 22, the degree of utilization of the light emitted by the lighting device 100 is advantageously increased. Furthermore, it is also possible for the blind 22 to be a classic blind or a PDLC shutter. In addition to a PDLC shutter, other types of glass that can be darkened by applying an electrical voltage are also possible.

Figure 11 shows a schematic perspective view of a room with a room divider according to an embodiment example. The room divider 330 has two room divider elements 331 with glazing within a frame, wherein the glazing comprises a lighting device 100 which is designed to be transparent to visible light. The lighting device 100 is either integrated into the glazing, as described, for example, in connection with Figures 5A and 5B, or adhered to the glazing. Due to their lighting function, the room divider elements 331 can advantageously be

used to illuminate room areas that are separated by the room dividers.

In the present case, the room divider 330 has a modular structure. It comprises two room divider elements 331, which can be connected to each other by means of plug-in connections. For this purpose, the frame of the room divider element comprises a sleeve 332 on its one side surface, which is designed in the manner of a cylinder, for example. The side surface of the frame, which is opposite the side surface with the sleeve 332, is provided with pins 333, which are designed to fit into the sleeves 332. By inserting the pins of a space divider element into the sleeves of another space divider element, two space divider elements 331 can be connected to each other. In particular, it is also possible to electrically connect the space divider elements 331 by means of the sleeves 332 and the pins 333. The space divider 330 forms a large-area illumination device.

Figure 12 shows a schematic sectional view of a display according to an embodiment example. The display 335 can be, for example, the display of a television, an LCD, an OLED or a plasma screen. The front glass pane of the display is used as a substrate 1 for a lighting device that is transparent to visible light. The first electrode 2, which comprises a TCO and is therefore transparent to visible light, is applied to the front glass pane.An organic layer stack 4 is applied to the first electrode 2, as described, for example, with reference to Figure 1. A second electrode 3, also comprising a TCO in the present case, is applied to this organic layer stack.

One of the following TCO materials, for example, is particularly suitable as the TCO for the cathode: ITO, ATO, zinc oxide.

A further glass plate is applied to the second electrode 3 as encapsulation 6. This can, for example, be bonded to the second electrode 3 with an adhesive layer 610. The organic layers are formed in such a way that the radiation from the organic layer stack is mainly emitted through the encapsulating glass plate. In the present case, the lighting device 100, which is integrated into the front pane of the display 335, can be used as an illumination source when the display is switched off. The lighting device is preferably dimmable for this purpose. When the lighting device is switched off, the content of the display 335 can be perceived by an observer, as the lighting device is transparent to visible light.

Figure 12B shows a schematic top view of a television set 336 with a display 335, as described in connection with Figure 12A.

Figure 13A shows a schematic perspective view of a shelf 340 according to an embodiment example. Figure 13B shows a section of Figure 13A. The shelf 340 comprises two side parts with rods 83, which are hollow on the inside and comprise electrical cables. The side parts with the rods 83 form a rod system, as also described, for example, with reference to Figure 68. These rods 83 are intended to support shelves 341. For this purpose, the shelves 341 each comprise correspondingly shaped holders 342 on the sides. In the present case, these are formed in the manner of a cut-open cylinder corresponding to the rods of the shelf side parts. However, it is also conceivable that the rods 83 and the holders 342 are angular. In the present case, the shelves 341 comprise a frame 343 in which a glazing with a lighting device 100 that is transparent to visible light is inserted. For electrical contacting, the holders 342 of the shelves in the present case comprise a pin 71 which is inserted into an

electrically conductive recess 73 within the rods 83, as shown in Figure 13B. The rods 83 of the side parts are preferably hollow. In this way, the cables used to contact the connectors can be routed inside the bars. Shelves such as the shelf 340 shown in Figure 13B can also be used, for example, in display cabinets or other pieces of furniture and storage furniture.

Figure 14 shows a schematic sectional view of a reflective display 335. A reflective display 335 comprises a reflective element 337 on its rear side, on which pixels 338 are arranged. Reflective displays 335 do not require backlighting, but reflect ambient light due to the reflective element 337 in such a way that the display content can be shown. Reflective displays 335 are therefore dependent on ambient light. They are no longer legible in the dark. A lighting device that is transparent to visible light is applied to the radiation-emitting front side 335a of the reflective display 335, as described, for example, with reference to Figure 5A. In the present case, this lighting device is designed to emit radiation predominantly in the direction of the reflective element. For better color rendering, the lighting device 100 can be slightly colored, for example in the color of a light magenta. For this purpose, for example, the encapsulation 6 or the substrate 1 or both are colored in the desired color. The lighting device is preferably attached to the front side 335a of the reflective display using an index matching material in order to avoid reflections. If the color of the lighting device can be varied, for example so that the RGB color space is covered, and if the reflective display 335 can still be switched fast enough, time-sequential operation in RGB is also possible. In this time-sequential operation, the display is preferably operated with frequencies of at least 70 Hz, particularly preferably at least 100 Hz.

Figure 15 shows a schematic sectional view of a lighting device 100 according to an embodiment example. The electrodes 2, 3, the substrate 1, the encapsulation 6 and the organic layer stack 4 are transparent to visible light, in particular to the light generated by the organic layer stack 4. A reflective element 337, which in the present case is a reflective layer sequence, is applied to the outside of the substrate 1, which can be formed by a glass plate, for example. The reflective layer sequence comprises a copper layer 337b, a silver layer 337a and a protective lacquer layer 337c, wherein the silver layer 337a is applied to the substrate 1, the copper layer 337b is applied to the side of the silver layer 337a facing away from the substrate and the protective lacquer layer is applied to the copper layer 337b. Since the reflective layer sequence is formed along the underside 100b of the lighting device 100, the lighting device 100 can no longer emit light from this side, but only from its upper side 100a. Furthermore, the reflective element reflects light that passes through the first electrode 2 and the substrate 1 in the direction of the upper side 100a of the lighting device 100.

As an alternative to the layer sequence described above with a silver layer, a copper layer and a protective lacquer layer, a dielectric mirror can also be used as the reflective element 337, for example, which is applied to the outside of the substrate like the layer sequence above.

The reflective element 337, such as a reflective layer sequence or a dielectric mirror, can, for example, continue to be applied to the outside of the encapsulation 6 or attached between the substrate 1 and the first electrode 2 and between the encapsulation 6 and the second electrode 3. If the reflective element is arranged on the outside of the encapsulation 6 or between the encapsulation 6 and the second

electrode 3, the lighting device 100 emits light from its underside 100b.

In particular, a lighting device 100 as shown in Figure 15 enables it to serve as a mirror when the lighting device is deactivated and as an illumination source when the lighting device 100 is in operation. In such a lighting device 100, either the entire light-emitting front side 100a can serve as illumination or as a mirror. Furthermore, it is also possible for the entire light-emitting front side 100a to serve as illumination and as a mirror.

Furthermore, the light-emitting front side 100a can also be divided into areas, so that one part of the light-emitting front side 100a serves as a mirror and another part as an illumination source.

For example, the lighting device can also be designed to emit light from both its front side 100a and its rear side 100b. Using the so-called cavity effect, for example, it is possible for light with different light properties to be emitted from different sides of the lighting device. Such a lighting device is described, for example, in the German patent application 102006046196.7, the disclosure of which is hereby expressly incorporated by reference.

Figure 16 shows a schematic sectional view of a lighting device 100 according to a further embodiment example. The following elements of the lighting device 100 are transparent to visible light: Encapsulation 6, substrate 1, first electrode 2 and organic layer stack 4. For example, a glass plate or a plastic film that is transparent to visible light can be used as substrate 1.

The first electrode 2 can be formed from a TCO, for example.

The organic layer stack 4 can be a layer stack as already described with reference to Figure 1.

The encapsulation 6 can, for example, be a glass cap, a glass plate, a plastic cap or a plastic plate.

Furthermore, a getter material that is also transparent to visible light can be applied to the inside of the cap or plate facing the organic layer stack 4. Furthermore, the encapsulation 6 can be a thin-film encapsulation that has at least one barrier layer. The barrier layer can, for example, consist of SiOx or SiNx or have one of these materials. Furthermore, the thin-film encapsulation 6 can also have first and second barrier layers 601, 602, which alternate in terms of their material composition. Intermediate polymer layers can be arranged between the alternating barrier layers, for example, see also Figure 3.

Figure 17A shows a schematic sectional view of a thin-film encapsulation 6 with alternating barrier layers 601, 602, wherein a polymer intermediate layer 604 is provided between two neighboring barrier layers of different material composition. The intermediate barrier layers may be, for example, two barrier layers 601 comprising SiOx and two barrier layers 602 comprising SiNx, as already described in connection with Figure 3. As in the embodiment example according to Figure 3, the barrier layers 601, 602 are arranged alternately with respect to their material composition, that is to say that first barrier layers 601 alternate with second barrier layers 602 within the thin film encapsulation 6, the first and second barrier layers 601, 602 having different material compositions. In contrast to the thin film encapsulation 6 according to Figure 3, however, the barrier layers 601, 602 are separated from each other by intermediate polymer layers 604.

As an alternative to the use of a separate reflective element 337, such as the reflective layer sequence described above or the dielectric mirror, the second electrode 3 of the lighting device according to Figure 16 is designed to reflect visible light. For this purpose, the second electrode 3 comprises, for example, aluminum or silver or consists of one of these materials. Such a lighting device is just as suitable for use as a mirror and/or illumination source as the lighting device shown in Figure 15.

In order to obtain a lighting device that can serve as a mirror and/or as an illumination source and does not have an additional reflective element, it is also possible to make the second electrode 3 transparent to visible light, for example by using a TCO as the electrode material, and instead make the encapsulation 6, the substrate 1 or the first electrode 2 reflective.

A reflective encapsulation 6 can be a polished metal cap, for example.

Figure 17B shows a schematic sectional view of a reflective encapsulation 6 according to an embodiment example. This is a cap that is either already reflective, for example by being formed from a polished metal, or a cap that is not reflective. A reflective element 337, for example a reflective layer, is applied to the inside of the cap facing the organic layer stack 4. The reflective layer on the inside of the cap may, for example, be a metallic layer, such as one comprising silver or consisting of silver. The reflective layer can also have several layers. A getter layer 611 made of a getter material that is transparent to visible light is also applied to the reflective layer.

Figure 17C shows a schematic sectional view of a thin-film encapsulation 6 according to a further embodiment example. Like the thin-film encapsulation 6 according to Figure 17A, the thin-film encapsulation 6 has alternating barrier layers 601, 602, which are separated from one another by intermediate polymer layers 604. In contrast to the thin film encapsulation 6 according to Figure 17A, the thin film encapsulation 6 according to Figure 17C has a reflective element 337, for example a reflective layer sequence, as already described with reference to Figure 15. The reflective layer sequence comprises a silver layer 337a, which is applied to the outermost barrier layer 602. A copper layer 337b is applied to the silver layer 337a, on which in turn a protective lacquer layer 337c is arranged. Due to the reflective layer sequence, the thin film encapsulation is reflective and can be used as a reflective encapsulation.

Another way of designing a lighting device 100 that allows switching back and forth between mirror function and illumination function is to make the substrate 1 reflective, while the other elements of the lighting device that the light generated in the organic layer stack 4 has to pass through on its way to the light-emitting front side 100a, in particular the second electrode 3, the organic layer stack 4 and the encapsulation 6, are designed to be transparent to visible light. A reflective substrate 1 may, for example, comprise metal or consist of a metal. For example, a metal foil, such as a stainless steel foil, can be used as the reflective substrate 1. In particular, a mirror can be used as the substrate. Furthermore, a laminate of plastic foils onto which a metal foil - made of aluminum, for example - is laminated is suitable as a reflective substrate. The substrate can also be a glass substrate with a reflective coating.

Alternatively or in addition to a reflective substrate 1, the first electrode 2 can also be reflective. Such an electrode can, for example, have or consist of one of the following materials: aluminum, silver.

Furthermore, the thin film encapsulation 6 can also form a dielectric mirror or a Bragg mirror. The material of the first and second barrier layers 601, 602 and the thickness of these layers is then selected accordingly.

Figure 18A shows a perspective schematic representation of a motor vehicle mirror 315 with a lighting device 100, in which switching between lighting function and mirror function is possible, as described, for example, in connection with Figures 15 to 17C. In the present case, the lighting device has a luminous surface which is designed in accordance with the lettering "Info 1." For this purpose, one of the electrodes 2, 3 can be structured, as described with reference to Figure 5B. In contrast to Figure 5B, however, the lighting device 100 according to Figure 18A has a reflective element 337, for example an additional reflective layer sequence. Furthermore, one of the elements of the lighting device 100, for example one of the electrodes 2, 3, the substrate 1 or the encapsulation 6 may also be reflective, as described above. In this way, logos, symbols or other information can be displayed illuminated as desired against the background of a mirror surface. For example, warnings, such as distance messages when parking, could be displayed in the motor vehicle mirror 315 with the help of these lighting devices 100.

Figure 18B shows a schematic perspective view of the motor vehicle mirror 315 shown in Figure 18A. A mirror is used as substrate 1 in the motor vehicle mirror. The substrate 1 is connected to a holder. A first electrode 2 is applied within an active area 5 on the substrate. The first electrode 2 is

transparent to visible light, for example by being formed from a TCO. Furthermore, the first electrode 2 is structured according to the lettering "Info 1." An organic layer stack 4, which is transparent to visible light, is applied to the structured first electrode 2. The second electrode 3, which is also transparent to visible light, is also applied to the organic layer stack 4. A glass plate is used as encapsulation 6, which is placed over the second electrode. The organic layer stack 4 and the second electrode 3 are applied over the entire surface within the active area 5. It is sufficient to structure the first electrode 2 so that the lighting device 100 has a luminous surface that is structured in accordance with a lettering. The use of a mirror as substrate 1 allows the lighting device to be integrated into the vehicle mirror 315 in a simple manner.

Figure 19 shows a schematic perspective view of a multi-part mirror 345 according to an embodiment example. Such a mirror can be used, for example, as a bathroom or wardrobe mirror. The mirror 345 comprises a central part 345a and two pivotable side wings 345b arranged to the side of the central part (indicated by arrows in the figure). The side wings 345b each comprise a lighting device 100, which can be switched between reflective and illuminating functions and whose illuminated surface fills almost the entire surface of the side wing. In good lighting conditions, the side wings 345b can be used as normal mirrors. In poor lighting conditions, for example in the dark or in twilight, one of the two side wings or both side wings 345b of the mirror can be switched on as an illumination source in order to illuminate the viewer. Furthermore, the illuminated side wings 345b can serve as a decorative lighting element.

Like Figure 19, Figure 20 shows a schematic perspective view of a multi-part mirror 345 according to a further embodiment

example. This mirror is also a three-part mirror with a central part 345a and two side wings 345b arranged to the side of the central part, into which lighting devices 100 are inserted, whereby it is possible to switch back and forth between reflecting and illuminating functions. Such a mirror can also be used as a bathroom or wardrobe mirror, for example.

Figure 21 shows a schematic perspective view of a search mirror 350 according to an embodiment example. The search mirror 350 comprises a mirror element 351 and a holding element 352, to which the mirror element is attached. The holding element 352 is bent so that the mirror element 351 can be used to view areas that are difficult to access. Such a search mirror can be a dental mirror, for example.

The search mirror 350 comprises a lighting device 100 on its mirror element 351, which can be switched back and forth between reflective and illuminating functions. The lighting device can cover part of the mirror surface or almost the entire mirror surface. It therefore offers the possibility of simultaneously illuminating and viewing places that are difficult to access. Such a mirror can also be used at home, for example to search for lost objects behind/under furniture that is difficult to move.

Figure 22 shows a schematic perspective view of a make-up mirror according to an embodiment example. In the present case, the make-up mirror is integrated into a cosmetics set, such as a powder compact. Furthermore, the make-up mirror comprises a lighting device that can be switched back and forth between reflecting and illuminating functions. The lighting device can be activated in poor visibility conditions. At low brightness, the make-up mirror 355 can therefore be used simultaneously as a cosmetic mirror and as a

face illuminator. The lighting device 100 can comprise part or almost the entire mirror surface.

Figure 23 shows a schematic top view of a decorative element 360 according to an embodiment example. The decorative element 360 is designed as a twinkling poinsettia. A base surface of the star is designed to be reflective, with lighting devices being inserted into partial areas of the star, which can be switched back and forth between reflective and illuminating functions. These lighting devices can also be colored, for example. In particular, these can also be multicolored lighting devices 100, as described below.

Figure 24 shows a schematic perspective view of a mirror 365 according to a further embodiment example. In the present case, the mirror 365 is intended for use in a domestic wet area. In the present case, the mirror has an outer area that is provided with a lighting device 100, which can be switched back and forth between illuminating and reflecting functions.

Figure 25 shows a schematic sectional view of a lighting device 100 according to an embodiment example of a lighting device described here.

The lighting device 100 shown in Figure 25 is a flexible lighting device. The flexible lighting device 100 is characterized, among other things, by the fact that it can be bent to a certain degree without being damaged by bending. Preferably, the flexible lighting device can be bent several times without being damaged. The lighting device is then suitable for surviving a plurality of bending cycles undamaged.

The lighting device 100 of Figure 25 comprises a substrate 1. The substrate 1 is a flexible, metallic substrate 1. The

metallic substrate 1 contains or consists of one of the following metals: aluminum, stainless steel, gold, silver. Preferably, the substrate 1 is designed as a metal foil with a thickness of at most 1 mm, particularly preferably at most 0.5 mm. It is also possible for the flexible, metallic substrate 1 to be designed as a central sheet with a thickness of at least 3 mm and at most 4.75 mm or as a thin sheet with a thickness of at most 3 mm.

A first electrode 2 is applied directly to the first main surface 101 of the substrate 1. The first electrode 2 is, for example, a cathode of the lighting device 100.

The cathode is suitable for imprinting electrons into the organic layer stack following the cathode. For this purpose, the cathode has a material that is characterized by a low work function for electrons. The cathode preferably contains or consists of alkali metals or alkaline earth metals. Furthermore, the cathode can comprise one or more layers consisting of silver, aluminum and/or platinum or containing at least one of these metals.

The organic layer stack 4 is preferably applied directly to the cathode. The organic layer stack 4 comprises at least one layer 401 that is suitable for generating light during operation of the lighting device 100.

The organic layer stack 4 may comprise further organic layers, such as a hole-conducting layer 409 or an electron-conducting layer 408. The electron-conducting layer is preferably directly adjacent to the cathode. The hole-conducting layer is arranged on the side of the light-generating layer 401 of the layer stack 4 facing away from the cathode and is preferably adjacent to the anode of the lighting device 100.

A second electrode 3 is preferably arranged directly on the organic layer stack 4. The second electrode 3 is, for example, an anode of the lighting device 100.

The anode is designed to inject holes into the organic layer stack. The anode has a material that has a high work function for electrons. For example, indium tin oxide (ITO) is a suitable material for forming the anode.

A planarization layer 7 is preferably applied directly to the second electrode 3. The planarization layer 7 consists of or contains an organic material.

According to the embodiment example described in connection with Figure 25, additional scattering centers 701 are introduced into the planarization layer. The scattering centers 701 may, for example, be particles of at least one of the following materials: Luminescence conversion material, color filter material, diffuser material. For example, the materials already mentioned in the general description section can serve as luminescence conversion materials.

Color pigments dispersed in a matrix material, for example, are suitable as color filter materials. The matrix material is, for example, transparent plastics such as acrylate, polyacrylate or polyimide. The color filter material only allows light of a certain color - for example green, red or blue light - to pass through.

The diffuser material is, for example, light-scattering particles such as titanium oxide, silicon oxide or particles of the luminescence conversion materials described above, which can be embedded in a matrix.

An encapsulation 6 is preferably applied directly to the planarization layer 7. The encapsulation 6 is formed by a plurality of barrier layers, which preferably contain an inorganic material. As part of a thin-film encapsulation, the barrier layers form the flexible encapsulation of the lighting device. For example, first and second barrier layers 601, 602 are alternately applied to the planarization layer 7. The first barrier layers 601 consist of a silicon oxide, the second barrier layers 602 then consist of a silicon nitride, see also Figure 3, in which such a thin-film encapsulation is explained in more detail.

Overall, a flexible lighting device 100 with a metallic substrate 1 is described in connection with Figure 25.

The lighting device according to Figure 25 is intended to emit light from its upper surface 100a. For this purpose, the elements through which the light generated in the organic layer stack must pass on its way to the upper side 100a, in particular the organic layer stack 4 itself, the second electrode 3 and the encapsulation 6 are designed to be transparent to visible light. Furthermore, the planarization layer 7 is also transparent to visible light.

The first main surface 101 of the substrate 1 of the lighting device 100 can be made reflective for the light generated in the organic layer stack 4 by polishing the main surface 101. The lighting device described in connection with Figure 25 is then a flexible, reflective lighting device.

Figure 26 shows a schematic sectional view of an embodiment of a lighting device described here.

The lighting device 100 described in connection with Figure 26 is a flexible lighting device. The flexible lighting device

100 is preferably designed to be flexible in such a way that it can be rolled onto a roll and unrolled from a roll without being damaged.

The lighting device 100 comprises a substrate 1. The substrate 1 is in the form of a plastic film. This means that the substrate 1 has a thickness of at most 1 mm, preferably at most 0.5 mm, particularly preferably of between at least 50 and at most 500 µm, for example 250 µm, and contains or consists of plastic. Suitable plastics include PE, polyimide and similar plastics.

A first electrode 2, which is preferably transparent to visible light, is preferably applied directly to the first main surface 101 of the substrate 1. In other words, as described above, the first electrode 2 is at least partially transparent to the light generated by lighting devices during operation. For this purpose, the first electrode 2 can consist of a translucent material and/or be grid-shaped. Preferably, the organic layer stack 4 is applied directly to the first electrode 2. The organic layer stack 4 comprises at least one light-generating organic layer 401. Furthermore, the organic layer stack 4 comprises an outermost organic layer 402 which, for example, directly adjoins the second electrode 3. The outermost organic layer is doped with a dopant 410. Preferably, the dopant 410 of the doped layer comprises - as explained above - atoms or molecules which are as large as possible and which are suitable for emitting electrons - n-dopant - or holes - p-dopant. Furthermore, the dopant has a low diffusion constant within the organic layer stack 4. For this purpose, the dopant is formed from the largest possible atoms or molecules. Cesium, for example, proves to be a suitable dopant.

The second electrode 3 is preferably applied directly to the organic layer stack 4. As described above, the second electrode 3 is translucent. This means that the second electrode 3 is made of a translucent material and/or is grid-shaped.

Preferably, a translucent encapsulation 6 is applied directly to the second electrode 3. The encapsulation 6 is preferably formed by a translucent plastic film. In this case, the translucent encapsulation 6 can be formed from the same material as the substrate 1. However, it is also conceivable that the encapsulation is formed from one or more barrier layers, as described, for example, in connection with Figure 3. In this case, the encapsulation 6 is designed as a flexible thin-film encapsulation.

Overall, a translucent, flexible lighting device 100 is described in connection with Figure 26. In particular, due to the particularly flexible substrate 1 formed as a plastic film and the particularly flexible encapsulation 6 formed as a plastic film or thin film encapsulation, the lighting device 100 is so flexible that it can be rolled onto a roll and unrolled from a roll without being damaged.

Figure 27 shows a schematic sectional view of an embodiment of a lighting device 100 described here.

The lighting device 100 explained with reference to Figure 27 is a flexible lighting device. The flexible lighting device 100 of Figure 27 is characterized, among other things, by the fact that it can be bent to a certain degree without being damaged. Preferably, the flexible lighting device can be bent several times without being damaged. The lighting device is then suitable for surviving a plurality of bending cycles undamaged. The lighting device 100 can be designed to be so

flexible that the lighting device can be rolled onto a roll and unrolled from a roll without being adversely affected.

The lighting device 100 comprises a substrate 1. The substrate 1 is a flexible laminate substrate. In other words, the substrate 1 of the lighting device 100 is designed as a laminate.

The laminate comprises a first layer 104, which is made of plastic. Furthermore, the laminate comprises a second layer 103, which is made of glass. The laminate also comprises a third layer 104, which is again made of plastic. For example, the layers of the laminate are glued together. However, the second layer 103 of the laminate, which is made of glass, can also be coated with a plastic. The substrate 1 of the lighting device 100 described in connection with Figure 27 is flexible and can also be translucent. Compared to a simple plastic film, for example, a laminate is particularly suitable for keeping moisture away from the electrodes and the organic layer stack 4.

A first electrode 2 is preferably applied directly to the first main surface 101 of the substrate 1. The organic layer stack 4, which comprises at least one light-generating organic layer 4, follows the first electrode 2.

The second electrode 3 is applied directly to the organic layer stack.

The second electrode 3 is followed by the encapsulation 6 of the lighting device 100. The encapsulation may be a thin-film encapsulation comprising one or more barrier layers, as described above. The encapsulation can also be a film - for example a plastic or metal film. Furthermore, the

encapsulation may be designed as a laminate, just like the substrate 1 of the lighting device 100.

Figure 28A shows a window 20, which is covered by a blind 22, in a schematic top view according to an embodiment example.

Figure 28B shows a schematic sectional view through a slat 21 of the blind 22, as shown in Figure 28A. The slat 21 of the blind 22 is formed as a flexible lighting device 100, similar to that described, for example, in connection with Figure 25.

Preferably, this lighting device 100 comprises a substrate 1 which is designed to be opaque. The substrate 1 may, for example, be a metallic substrate 1 or a plastic substrate. In particular, the slat of a conventional Venetian blind can be used as substrate 1.

A layer sequence comprising at least a first electrode 2, an organic layer stack 4, a second electrode 3 and an encapsulation 6 is then applied to the slat as substrate 1 of the lighting device 100. The encapsulation is preferably translucent.

When the blind 22 is closed, the slats 21 of the blind 22 are preferably oriented relative to the window 20 in such a way that the opaque substrate 1 is directed outwards and the translucent encapsulation is directed inwards, i.e. into the room. The blind formed in this way can thus be used as an illuminating device for the room.

For this purpose, the organic layer stack 4 is preferably suitable for generating white light similar to daylight. The organic layer stack 4 can, for example, be constructed as explained in connection with Figure 1. In this way, lighting is advantageously provided that is similar to daylight in

terms of emission direction, emission characteristics and light impression. This allows the room darkened by the blind 22 to be illuminated with a particularly natural-looking light. With the aid of such a blind, a room can be protected from prying eyes from the outside and illuminated at the same time, for example. Furthermore, it is also possible that the organic layer stack 4 is suitable for generating colored light. Such a blind can also have a decorative function in addition to the darkening function, for example.

Figure 29A shows a schematic top view of a window 20 which is covered by a curtain 23 according to an embodiment example.

Figure 29B shows the curtain 23 in a schematic sectional view.

The curtain is formed, for example, as a flexible lighting device 100 as described in connection with Figures 26 or 27. That is, the curtain 23 comprises a flexible substrate 1 formed by a plastic film or a laminate. The substrate 1 is preferably opaque.

The encapsulation of the lighting device 100 is in the form of a translucent foil, a translucent laminate or a translucent thin-film encapsulation. The opaque substrate is directed towards the window.

The translucent encapsulation 6 is directed into the room, away from the window 20.

The curtain 23 can, for example, be connected to a power supply 10 by a rod 24 or a cable and energized by the latter. A curtain 23 formed in this way makes it possible to illuminate a room with light that can be very similar to daylight in terms of beam direction, beam characteristics and color.

In connection with Figure 29C, a further embodiment example of a curtain 23 is described in a schematic sectional view. In this embodiment example, a lighting device 100 is applied to a textile carrier, for example a conventional textile curtain 25. In this case, the lighting device 100 is preferably designed as a flexible and possibly translucent lighting device 100, as described, for example, in connection with Figures 26 or 27. In this case, the textile material of the curtain 25 faces the window 20, while the lighting device 100 faces away from the window 20.

The lighting device 100 is preferably attached to the curtain 25 via a Velcro connection. For this purpose, a Velcro fastener is, for example, glued to the second main surface 102 of the substrate 1 of the lighting device 100 - see also the embodiment example of a lighting device 100 described here in connection with Figure 49. In this way, the lighting device 100 can be easily detached from the textile curtain 25, for example in order to be able to wash the textile curtain or replace a defective lighting device 100 particularly easily. In the event that the lighting device is translucent, it is advantageous that the curtain remains visible through the lighting device.

Figure 30 shows a schematic top view of a window 20 that is covered by a textile curtain 25.

In contrast to the embodiment example of Figure 29C, the lighting devices 100 in this embodiment example do not completely cover the textile material, but are applied to the curtain in the form of individual, smaller applications. In this way, it is possible, for example, to apply lighting devices 100 of a predeterminable size and shape to the textile curtain 25. The lighting devices can, for example, form stylized stars, moons, hearts or even lettering. A curtain 25

formed in this way is particularly suitable as a night light in a children's room, as Christmas lighting or for advertising purposes in a shop window. The lighting device 100 is preferably a flexible lighting device that is reflective and/or multicolored.

The individual lighting devices 100 can be contacted via conductor tracks 26. The conductor tracks 26 are attached to the textile curtain 25 or woven into the curtain 25. The lighting devices 100 can in turn be energized via a cable or a rod 24, which is connected to a power supply 10. It is also possible for the lighting devices 100 to each carry an autonomous power supply such as a battery.

Figure 31 shows a schematic sectional view of an embodiment of a lighting device described here. The lighting device 100 is, for example, a flexible lighting device 100 as described in more detail in connection with Figures 25, 26 and 27.

An adhesive layer 30 is applied to the second main surface 102 of the substrate 1 facing away from the first main surface 101 of the substrate 1. The adhesive layer is covered by a protective film 31. The protective film can be peeled off the adhesive layer 30, so that the adhesive layer 30 can be exposed by peeling off the protective film 31. As a result, a lighting device 100 is created that can be attached to a predetermined position by sticking it on after simply peeling off the protective film 31 in the sense of a decal.

Figure 32 shows a schematic perspective view of a piece of furniture 33, for example a table, a shelf or a piece of storage furniture in general, which is covered with a self-adhesive lighting device 100 as shown in figure 31.

Due to the flexibility of the lighting device 100, the lighting device 100 can also be glued around edges, curves or corners of the piece of furniture 33. By gluing the flexible, self-adhesive lighting device 100 to the piece of furniture 33, a piece of furniture is created that functions as an illuminating device 1000.

In the schematic perspective view of Figure 33, a flexible lighting device, such as that shown in Figure 31, is shown in a rolled-up state.

This means that the lighting device 100 is flexible in such a way that it can be rolled up into a roll and unrolled from a roll 32 in the direction of the arrow 32. In addition to particularly space-saving storage of the lighting device 100, this makes it particularly easy to use the lighting device 100, for example for covering furniture, stair landings, walls, tiles, or sanitary facilities.

Figure 34A shows a schematic top view of an embodiment of an illuminating device 1000 described here.

Figure 34B shows the illuminating device 1000 in a schematic sectional view along the sectional line AA'.

The illuminating device 1000 according to Figures 34A and 34B is a flexible illuminating device. The flexibility of the illuminating device 1000 is achieved by the fact that rigid lighting devices 100, i.e. lighting devices 100 that do not have any flexibility per se because they have, for example, a rigid substrate 1 and/or a rigid encapsulation 6, are embedded in a flexible matrix 40.

The illuminating device 1000 comprises two flexible supports 42, 43, between which the rigid lighting devices 100 and the

material of the matrix 40 are arranged. At least the support 43 through which the lighting devices 100 emit the light generated during operation is translucent. The other support 42 can be formed from an opaque, for example reflective material such as a metal foil.

The space between the two supports 42, 43 is filled with the rigid lighting devices 100 and a flexible matrix material 40. The translucent matrix material can contain particles of at least one of the following materials: luminescence conversion material, color filter material, diffuser material.

Suitable matrix materials include, for example, Zeonex, polystyrene, polycarbonate or other plastics, which can preferably be processed by injection molding.

Near the flexible support 42, the support 43 is, for example, a Plexiglas plate, a plastic film or a plastic-glass-plastic laminate.

The rigid lighting devices 100 can be arranged so close together that a homogeneous light impression is produced by the illuminating device 1000, possibly due to diffuser particles contained in the matrix material. This means that individual lighting devices 100 are then no longer perceptible to the observer, but the illuminating device 1000 has a single, homogeneous illuminated surface.

Alternatively, the lighting devices 100 can be arranged at such a distance from each other that webs between the lighting devices are perceptible. In this case, the space between individual lighting devices can be filled with a matrix material that has light-absorbing particles. The light-absorbing particles can be soot or particles of colorants, for example.

The conductor tracks 41, which connect the individual lighting devices 100 of the lighting device 1000 to each other, are arranged in the matrix material. This ensures the flexibility of the lighting device. The conductor tracks 41 are formed by thin, metallic springs or thin wires laid in meanders.

The supports 42, 43 of the lighting device 1000 can be selected with a load-bearing capacity such that the lighting device 1000 can withstand loads of up to several hundred kilograms without damage. In this way, the lighting device 1000 can be used as a floor covering.

In a further embodiment of the lighting device 1000, as described in connection with Figures 34A and 34B, at least one of the two supports of the lighting device 1000 is rigid. The rigid support can, for example, have a predeterminable curvature, so that a three-dimensionally shaped lighting device 1000 is produced, which is unchangeable in its shape, i.e. rigid.

For the lighting devices 100 of the lighting device 1000 as described in connection with Figures 34A and 34B, any of the lighting devices 100 described herein can be used. In this way, colored, translucent, reflective or multicolored, flexible lighting devices can be produced particularly easily and cost-effectively.

Figure 35A shows a schematic top view of a lighting device 100 according to an embodiment example of a lighting device 100 described herein.

Figure 35B shows a schematic sectional view of the lighting device 100 of Figure 35A along the sectional line AA'.

The lighting device described in connection with Figures 35A and 35B is a multicolored lighting device.

As shown schematically in the plan view of Figure 35A, the lighting device includes first and second color sub-regions that are laterally juxtaposed. The first 50 and second 51 color subregions are suitable for emitting light of different colors. The first color sub-region 50 is suitable for emitting light of a first color. The second color sub-region 51 is suitable for emitting light of a second color. The first color is different from the second color.

In the embodiment example of the lighting device described in connection with Figure 35A, the first and second color sub-regions 50, 51 are arranged in a checkerboard pattern with respect to each other. That is, the first and second color subregions 50, 51 are arranged at the grid points of a square grid such that each first color subregion 50 that is not arranged at the edge of the lighting device 100 has four second color subregions 51 as its nearest neighbors that are laterally adjacent to the first color subregion 50. The same applies to the second color sub-areas 51.

The color sub-areas 50, 51 are formed in the manner of pixels of a display. The size of each color sub-area is preferably at least 1 mm^2.

As illustrated in the schematic sectional view of Figure 35B, the first and second color sub-regions 50, 51 may comprise different luminescence conversion materials or different color filter materials, which are responsible for the different color impression of the first and second color sub-regions. For example, the first color sub-regions 50 comprise a first luminescence conversion material and/or a first color filter material 52. The second color sub-regions 51 then comprise a

second luminescence conversion material and/or a second color filter material 53.

The luminescence conversion materials and/or the color filter materials may thereby be arranged in a layer of the lighting device which extends parallel to the first main surface 101 of the substrate 1 of the lighting device 100, and which is arranged such that at least a majority of the electromagnetic radiation generated in the organic layer stack 4 during operation passes through this layer.

In the embodiment example described in connection with Figure 35B, the lighting device 100 comprises a substrate 1 to which a first electrode is applied. The organic layer stack 4, which comprises at least one organic layer intended for light generation, is applied to the side of the first electrode 2 facing away from the substrate. The organic layer stack 4 is followed by a second electrode 4 on its side facing away from the first electrode 2.

The layer comprising the first 52 and second 53 luminescence conversion materials and/or the first and second color filter materials is arranged on the side of the second electrode 3 facing away from the organic layer stack 4. The lighting device 100 is hermetically encapsulated from the environment by an encapsulation 6.

By structuring the first 2 and/or second electrode 3 accordingly, the color sub-regions can be controlled independently of each other.

In particular, the structure of the lighting device 100 can be as in one of the other embodiments described. This makes it particularly easy to create flexible, translucent and/or

reflective lighting devices that have at least two color sub-regions.

Suitable first and/or second luminescence conversion materials are, for example, the materials described above.

The materials described above, for example, are suitable as first and second color filter materials.

For reasons of simplification, only two different color sub-regions are shown in the embodiment example described in connection with Figures 35A and 35B. However, the lighting device 100 may have a larger number of different color sub-regions suitable for producing light of different colors in pairs.

In extreme cases, the color of the light of each color sub-region differs from the color of the light of another color sub-region of the lighting device. This is illustrated schematically in Figure 35C, which explains a further embodiment example of a multicolored lighting device 100 described herein by means of a schematic top view. In this embodiment example, the lighting device has five different color sub-regions 50a to 50e, each of which produces light in pairs of different colors.

Figure 36 shows a schematic sectional view through a lighting device 100 according to a further embodiment example of a lighting device 100, as shown for example in the schematic plan view of Figure 35A.

The lighting device described in connection with Figure 36 is a multicolored lighting device.

In the embodiment example of the lighting device 100 of Figure 36, the materials - that is, the first 52 and second 53 luminescence conversion materials and/or the first and second color filter materials - are arranged in the encapsulation 6 of the lighting device 100. For example, the encapsulation 6 of the lighting device 100 may be formed by a plate or flexible foil in which the materials are embedded.

This enables a lighting device 100 where the desired color impression of the lighting device 100 can be set by selecting the encapsulation 6. The structure of the lighting device 100 with regard to the other elements of the lighting device can be as in one of the embodiments discussed above or below. This makes it particularly easy to create flexible, translucent and/or reflective lighting devices that have at least two color sub-regions. The functional components of the lighting device, such as the first electrode 2 and second electrode 3 and the organic layer stack 4, can be manufactured independently of the encapsulation 6.

Figure 37 shows a schematic sectional view of a further embodiment example of a multicolored lighting device 100 described here. The active area of the substrate in the present case comprises sub-areas, each of which corresponds to a color sub-area. In this embodiment example, the different color sub-regions 50, 51 of the lighting device 100 are created by different emitter materials in the organic layer stack. This means that the organic layer stack is structured in a lateral direction. The first and second color sub-regions differ at least with regard to an organic layer intended for generating light. For example, the first color sub-region 50 has a first emitter material, the second color sub-region 51 then has a second emitter material that differs from the first emitter material. The structure of the lighting device 100 can then be as in one of the other embodiments with regard to the

other elements of the lighting device. This makes it particularly easy to create flexible, translucent and/or reflective lighting devices that have at least two color sub-regions.

Figure 38 shows a schematic top view of the first and second electrodes 2, 3 for a further embodiment example of a multicolored lighting device 100. As can be seen from Figure 38, the first and second electrodes 2, 3 are each strip-shaped. In this way, the individual color sub-areas 50, 51 can be controlled independently of each other. In this case, the lighting device 100 is constructed in the manner of a passive matrix display device. The individual color sub-areas 50, 51 are controlled by means of a control device 11, which can be arranged outside the lighting device 100 or integrated into the lighting device 100. The lighting device 100 is energized by the power supply 10 via the control device 11.

Figure 39 shows another embodiment example of a multicolored lighting device 100 described here in a schematic top view. In this embodiment example, all first color sub-areas 50 and all second color sub-areas 51 are connected to each other by electrical connections 54 and 55 respectively. This means, for example, that all first color sub-regions 50 can be controlled together and simultaneously in this way. Similarly, all second color sub-areas 51 can be controlled together and simultaneously. The first and second color sub-areas 50, 51, on the other hand, can be controlled separately from one another. A lighting device 100 designed in this way therefore has four operating states:

- the lighting device can be switched off, so that none of the color sub-regions produce light, i.e. none of the color sub-regions are lit;

- all first color sub-areas 50 of the lighting device 100 light up, the second color sub-areas 51 do not light up,

- all the second color sub-regions 51 of the lighting device 100 light up, the first color sub-regions 50 do not light up, and

- the first and second color subregions 50, 51 light up, so that the lighting device 100 emits light of the first and second colors.

Figure 40A shows a schematic top view of an embodiment of a lighting device 1000 described herein. The lighting device 1000 comprises multiple multicolored lighting devices 100 as described, for example, in connection with Figures 35A, 35B, 35C, 36, 37 or 39.

As can be seen from the enlarged section of Figure 40B, each lighting device 1000 comprises four color sub-regions 50a, 50b, 50c and 50d:

- The first color sub-region 50a is, for example, suitable for emitting light of green color during operation of the lighting device 1000.

- The second color sub-region 50b is suitable for emitting light of red color during operation of the lighting device 1000.

- The third color sub-region 50c is suitable for emitting light of blue color during operation of the lighting device 1000.

- The fourth color sub-area 50d is suitable for emitting white light during operation of the lighting device 1000.

The color sub-areas of each lighting device 100 of the illumination device 1000 can be controlled separately and independently of each other. For this purpose, the illumination device 1000 comprises a control device 11, which may contain a microcontroller, for example. The control device 11 is energized by means of the power supply 10.

Optionally, an optical element 60 is arranged downstream of the illumination devices 100 of the illumination device 1000 on their light-emitting front side 100a. The optical element 60 is preferably a diffuser plate. This means that light that passes through the optical element 60 is scattered by the optical element 60. In this way, the individual color sub-areas can no longer be perceived by the observer as separate elements when the illumination device 1000 is in operation; instead, the illumination device 1000 appears as if it has a single, homogeneous illuminated surface. The illuminated area of the illumination device 1000 is composed of the light-emitting front sides of the lighting devices of the illumination device.

The optical element 60 is further preferably suitable for mixing the light generated by the color sub-regions 50a, 50b, 50c, 50d of the individual lighting devices 100. In this way, the illuminating device 1000 is suitable for generating mixed light from two or more of these colors in addition to light from the colors of the individual sub-areas. Overall, a particularly flexible illuminating device is thus created, which is suitable for generating light of a large number of different colors in a simple manner.

If the lighting devices 100 of the illuminating device 1000 additionally have at least one color sub-area 50d which is suitable for generating white light, the brightness of the light emitted by the illuminating device 1000 can also be adjusted particularly easily by energizing this color sub-area.

Figure 41 shows a schematic top view of a further embodiment example of a lighting device 100 described here. The lighting device 100 has at least two color sub-regions 51 and 50. The color sub-regions can, for example, be arranged in accordance with the color sub-regions of the multi-color lighting devices described in connection with Figures 35A, 35B, 35C, 36, 37, 38, 39, 40A, 40B.

In the lighting device 100 described in connection with Figure 41, the first and second color sub-regions 50, 51 are connected antiparallel to each other. This means that when the lighting device 100 is energized in a first direction, for example, the first color sub-regions 50 are switched in the forward direction so that they generate light of the first color. The second color sub-areas 51 are then switched in the blocking direction so that no light is generated in the second color sub-areas.

By simply reversing the current direction, the second color sub-areas 51 can be energized in the forward direction in a next cycle, so that light of the second color is generated. The first color sub-areas 50 are then switched in the blocking direction so that no light is generated in the first color sub-areas 50.

The color sub-areas 50 can be integrated on a common substrate. Furthermore, the color sub-areas can also be

individual, small lighting devices that are connected antiparallel to each other.

Such a lighting device 100 is preferably controlled by means of a control device 11 in which a pulse width modulation circuit 12 is integrated. The pulse width modulation circuit 12 is suitable for generating current for first time spans, which has a first current direction. For second time spans, the pulse width modulation circuit 12 is suitable for generating current which has a second current direction which is opposite to the first current direction.

The control device 11 of the lighting device 100 can either be integrated into the lighting device 100 or it is arranged outside the lighting device. The lighting device 100 is energized by a power supply 10 via the control device 11.

Figure 42 shows a schematic sectional view of a lighting device 100 according to a further embodiment example of a lighting device 100 described herein.

The substrate of the lighting device 100 comprises an active area 5. The active area comprises at least a first electrode 2, an organic layer stack 4 and a second electrode 3.

A photodetector 65 is arranged on the substrate at a distance from the organic layer stack.

The photodetector 65 can, for example, be manufactured together with the organic layer stack and the electrodes on the active area 5. The photodetector 65 comprises at least a first electrode 2, a second electrode 3 and a photo-detecting layer sequence 66, which is arranged between the two electrodes. The photo-detecting layer sequence 66 comprises an

organic material. The photo-detecting layer sequence 66 thus comprises at least one layer containing an organic material.

In particular, the photodetector 65 may have the same structure as the organic layer stack between the two electrodes of the lighting device 100.

The photodetector 65 is intended to detect the brightness and/or the color location of the light generated by the active area 5. For this purpose, the photodetector 65 can be connected to a control device 11, which comprises a corresponding evaluation circuit. The control device 11 is preferably also arranged on the first main surface 101 of the substrate 1 of the lighting device 100. Alternatively, the control device 11 may be arranged outside the lighting device 100.

As shown in the schematic sectional view of Figure 42, the photodetector 65 and the organic layer stack may be encapsulated by a common encapsulation 6. The encapsulation is one of the encapsulations listed in connection with the lighting devices 100 described further above. This means that the encapsulation 6 is formed, for example, by a glass, a plastic film, a plastic-glass-plastic laminate, a metal foil, a metallic sheet, a cap or a thin-film encapsulation. The encapsulation 6 and/or the substrate 1 of the lighting device 100 are translucent.

In connection with Figure 43, a further embodiment example of a lighting device described herein is explained by means of a schematic sectional view.

In this embodiment example, a control device 11 is arranged together with the organic layer stack of the lighting device 100 on the first main surface 101 of the substrate 1. The

control device 11 can, for example, contain an organic material. Advantageously, the control device can then be manufactured using the same manufacturing methods as the active area 5. The control device 11 is electrically conductively connected to the organic layer stack of the lighting device 100 either via additional electrical leads 9, such as bonding wires 902, or by means of the first and second electrodes 2, 3. The control device 11 is suitable for energizing the active area 5 of the lighting device 100 in a predeterminable manner.

In particular, the control device 11 can also be set from outside - for example by a user of the lighting device 100. This means that a user can set a certain operating state of the lighting device 100 via the control device 11. As Figure 43 further shows, the control device 11 and the organic layer stack of the lighting device 100 are encapsulated by a common encapsulation 6. The encapsulation 6 is one of the encapsulations 6 listed in connection with the lighting devices 100 described further above. That is, the encapsulation 6 is formed, for example, by a glass, a plastic film, a plastic-glass-plastic laminate, a metal foil, a metallic sheet, a cap or a thin-film encapsulation. The encapsulation 6 and/or the substrate 1 of the lighting device 100 are translucent.

Figure 44 shows a schematic top view of a further embodiment example of a lighting device 100 described here. In this embodiment example of the lighting device, both a photodetector 65, as explained in connection with Figure 42, and a control device 11, as described in more detail in connection with Figure 43, are arranged together on the first main surface 101 of the substrate 1 of the lighting device 100. This enables a particularly compact and autonomous lighting device 100. The photodetector is preferably connected

to the control device 11, which is suitable for energizing the organic layer stack of the lighting device 100 depending on the measured values determined by the photodetector 65. The measured values may be, for example, the brightness and/or the color location of the light generated by the organic layer stack 4 of the lighting device 100. Furthermore, the photodetector 65 may additionally or alternatively be provided for detecting the ambient light. In this case, the organic layer stack is also energized depending on the ambient brightness.

In the embodiment example of the lighting device 100 described in connection with Figure 44, the organic layer stack, the photodetector 65 and the control device 11 may in particular each contain at least one organic material. These elements of the lighting device 100 can be manufactured using the same manufacturing methods. This enables a particularly simple and cost-effective manufacture of the lighting device 100.

In connection with the schematic sectional view of Figure 45, a further embodiment example of a lighting device 100 described herein is explained.

According to the embodiment example described in connection with Figure 45, the organic layer stack 4 comprises - in contrast to some of the embodiment examples of the lighting device described further above - several layers 403, 404, 405 provided for generating light.

Each of these layers provided for generating light forms a color sub-region of the lighting device 100, i.e. the color sub-regions of the lighting device are arranged vertically one above the other in this embodiment example. The different layers provided for generating light preferably differ in terms of their emitter material. The layers are therefore

suitable for generating light of different colors during operation of the lighting device. For example, the first layer 403 provided for generating light is suitable for generating red light. The second layer 404 is then suitable for generating green light. The fourth layer 405 provided for generating light is suitable for generating blue light.

The following emitter materials, for example, are suitable for generating light of the specified color:

- blue: DPVBi = 4,4'-Bis(2,2-diphenyl-ethen-l-yl)-diphenyl
- blue: SEB-020
- green: Irppy = fac-tris(2-phenly-pyridyl)iridium complex
- red: TER-012
- red: DCM2: 4-(Dicyanomethylene)-2-methyl-6-(julolidine-4-yl-vinyl)-4H-pyran

The other elements of the lighting device 100, such as the substrate 1, the first electrode 2, the second electrode 3 and the encapsulation 6, are designed according to one of the other embodiments of lighting devices 100.

Figure 46 shows the lighting device 100 shown in connection with figure 45 in a schematic perspective sketch. The lighting device is connected to a control device 11, which is suitable for adjusting the color of the light generated by the lighting device 100. The control device 100 preferably comprises a pulse width modulation circuit 12 for this purpose. Depending on the electric field strength that is set between the first electrode 2 and the second electrode 3 in the layer stack 4 when the lighting device 100 is energized, the recombination of the charge carriers in the organic layer stack 4 can be controlled in such a way that the recombination takes place predominantly in a specific, predeterminable layer intended for light generation. This means, for example, that the

recombination can be set to take place mainly in the layer 404 intended for light generation. In this way, predominantly green light is then generated by the lighting device 100.

The field strength in the organic layer stack 4 can be adjusted by the pulse width modulation circuit 12 of the control device 11. The electric field strength can be regulated, for example, by the pulse duration and the pulse height of the pulse-width modulated signal.

As Figure 47 schematically illustrates, the color in the CIE standard chromaticity diagram of the light generated by the lighting device 100 depends on whether the pulse width modulation circuit 11 generates a pulse width modulated signal with a short pulse duration 1220 or the lighting device 100 is energized by means of a continuous current 1210.

The pulse height of the pulse-width modulated signal essentially determines the brightness of the light generated by the lighting device 100. That is, in summary, the color and brightness of the light generated by the lighting device 100 can be adjusted by means of the pulse width modulation circuit 12.

The control device 11 may additionally be connected to a photodetector 65. For example, as described in connection with Figures 42 and 43, the photodetector 65 is suitable for detecting the color location and/or the brightness of the light generated by the lighting device 100. A specific color location of the light generated by the lighting device 100 can then be set by controlling it as a function of the values detected by the photodetector 65. In other words, the control device 11 comprises a control circuit that can set a specific color location of the light generated by the lighting device

100. The desired color location can preferably be preset by a user from outside the lighting device.

Referring to Figure 48A, a possible use of a multicolored lighting device 100, as described in connection with one of the previous embodiments, is explained by means of a schematic top view.

In this embodiment example, the lighting device 100 is applied to a textile garment 27. The lighting device 100 is attached to the garment 27, for example by means of a hook and loop fastener 34 arranged on the second main surface 102 of the substrate of the lighting device, see also Figure 49.

As Figure 48B illustrates in a schematic representation, the lighting device 100 is connected to a control device 11 which may comprise, for example, a pulse width modulation circuit. The wearer of the garment 27 can adjust the brightness and color of the light generated by the lighting device 100 via the control device 11.

Furthermore, the control device 11 may be provided to adjust the brightness and/or color of the light generated by the lighting device 100 depending on the measured values determined by the sensor 67.

The sensor 67 may, for example, be a sensor that is suitable for determining the body temperature, pulse rate and/or skin resistance of the wearer of the garment 27.

An increased body temperature can be signaled, for example, by the generation of red light by the lighting device 100. A low temperature can be signaled by the generation of blue light by the lighting device 100.

Overall, the garment 27 together with the lighting device 100 forms an illumination device in which the garment 27 is provided as a carrier. The power supply 10 of the lighting device 100 can, for example, be provided by a battery that is integrated into the garment 27 or the lighting device 100.

The lighting device 100 is used, for example, as a flirt indicator. The wearer of the garment 27 with the lighting device 100 can then signal his or her readiness to flirt by adjusting the color of the light generated by the lighting device 100.

Furthermore, the use of such a garment 27 with lighting device 100 in medical or military applications is also conceivable. The lighting device 100 enables simple monitoring of certain bodily functions such as body temperature, skin resistance and pulse rate of the wearer of the garment 27.

Figure 49 shows a schematic sectional view of an embodiment of a lighting device described here. The lighting device 100 is, for example, a flexible and/or multicolored lighting device 100 as described in connection with the embodiment example explained above.

A hook-and-loop fastener 34 is applied to the second main surface 102 of the substrate 1 facing away from the first main surface of the substrate 1. For example, the hook-and-loop fastener 34 is adhered to the second main surface 102 of the substrate 1 facing away from the first main surface of the substrate 1. The Velcro fastener 34 mechanically connects the lighting device 100 to a textile material, for example a garment 27 or a curtain 25.

In connection with Figure 50, a further possible use of a multicolored lighting device, as described, for example, in

connection with one of the above figures, is explained by means of a schematic perspective sketch. The lighting device 100 is attached to a piece of furniture 33, for example on a table top. The lighting device 100 can be attached using an adhesive layer, for example, as explained in connection with Figure 32. Depending on the user's preference, the color of the light emitted by the lighting device 100 can be adjusted. Such a piece of furniture 33 can also be used for product presentations in addition to its household use.

Figure 51 shows in a schematic perspective sketch the use of multicolored lighting devices 100 as room lighting, for example as ceiling or wall lights.

Depending on the user's wishes, the room can be illuminated with a light of a specific color and/or a specific color temperature in this way. In particular, it is possible for the multicolored lighting device 100 to be a flexible, translucent and/or reflective lighting device 100.

Figure 52 shows a schematic perspective view of an embodiment example of a lighting device 100 described here.

Substrate 1, electrodes 2, 3, organic layer stack 4 and encapsulation 6 of the lighting device 100 are formed according to another lighting device described herein.

In the embodiment example of Figure 52, electrical connection points 70 are formed on the second main surface 102 of the substrate 1 of the lighting device 100. In the embodiment example described in connection with Figure 52, the connection points 70 are designed as connection points protruding from the substrate. The connection points 70 are connected to the first electrode 2 and the second electrode 3 of the substrate, for example by means of the electrical supply lines described

above, and are used to make electrical contact with the lighting device 100 from outside the lighting device 100.

In addition, the connection points 70 of the lighting device 100 described in connection with Figure 52 serve to mechanically attach the lighting device 100 to another lighting device 100 or to a carrier.

Figure 53 shows a first possibility for forming the connection points 70 in the embodiment example of the lighting device 100 described in connection with Figure 52. In this case, the connection points 70 of the lighting device 100 are designed as connecting pins 71. The connecting pins are cylindrical, for example. The connecting pins are pressed into corresponding connection holes for contacting and fastening the lighting device 100. Preferably, in addition to the electrical contacting, the lighting device 100 is also mechanically fastened by a press fit.

In connection with Figure 54, a schematic perspective sketch shows another possible design of the connection points 70 of the lighting device 100 of Figure 52. In this case, the connection points 70 are designed as connection plugs 72. The connector plug of figure 54 is designed in the manner of a jack plug. The connector plug 72 has a first electrically conductive region 76a, which is electrically conductively connected, for example, to the first electrode 2 of the lighting device 100. Furthermore, the connector plug 72 has a second electrically conductive region 76b, which is electrically conductively connected to the second electrode 3 of the lighting device 100. Electrically insulating areas 77 separate the two electrically conductive areas 76a, 76b from each other.

In connection with Figure 55, a schematic top view shows a further design option for the connection points 70 of the lighting device 100, as shown in Figure F52. In this case, the connection point 70 is designed as a connector plug 72, with the electrically conductive areas 76a, 76b arranged laterally next to one another. The conductive areas 76a, 76b have a cylinder-like design.

The schematic perspective sketch in Figure 56 illustrates an embodiment example of a lighting device 100 described here in more detail.

In contrast to the embodiment example of Figure 52, in this embodiment example the connection points 70 are arranged on the side surfaces 105 of the substrate 1 of the lighting device 100. The connection points 70 can be designed as explained in connection with Figures 53, 54 and 55. This means that the connection parts are designed as connection pins or connection plugs.

The arrangement of the connection points 70 on the side surfaces 105 of the lighting device, as shown in Figure 56, makes it particularly easy to connect and electrically link several lighting devices 100 of the same design to form an illumination device with an extended illuminated surface. The illuminated surface of the illumination device is composed of the light-emitting front sides of the lighting devices of the illumination device.

In connection with the schematic perspective sketch of Figure 57, a further embodiment example of a lighting device 100 is described. In this embodiment example, the connection points 70 are formed on the second main surface 102 of the substrate 1 of the lighting device 100. The connection points 70 are formed by recesses or apertures in the substrate 1.

Figure 58 shows a schematic top view of a first possibility for designing the connection points 70 of the lighting device 100 of Figure 57. In this case, the connection point 70 is designed as an electrically conductive recess 73 or contact hole. By pressing in a connecting pin as shown in Figure 53, for example, the lighting device 100 can be electrically connected and mechanically fastened via the electrically conductive recess.

The schematic top view of Figure 59 shows a further embodiment example for the connection points 70 of the lighting device 100 described in connection with Figure 57. In this case, the connection points 70 are designed as connection sockets 74. Each connection socket 74 has two electrically conductive regions 76a, 76b, each of which is connected to an electrode 2, 3 of the lighting device 100. For example, such a connection socket 74 can be electrically connected by means of a connector plug 72 as shown in Figure 54.

Figure 60 shows a schematic top view of a further embodiment of the connection points 70 of the lighting device 100 of Figure 57. In this case, the electrically conductive regions 76a, 76b are designed as electrically conductive - for example metallic - coatings of a connection socket, which are arranged in the substrate 1 of the lighting device 100. The electrically conductive areas 76a and 76b are arranged laterally next to each other. For example, such a connection socket 74 can be electrically connected by means of a connector plug 72 as shown in Figure 55.

The schematic perspective sketch of Figure 61 shows a further embodiment example of a lighting device 100 described here. In contrast to the lighting device described in connection with Figure 57, the connection points are designed as recesses in the side surfaces 105 of the substrate 1 of the lighting

device 100. The specific configuration of the connection points 70 can be made in accordance with the connection points 70 described in connection with Figures 58, 59 and 60.

Figure 62A shows a schematic perspective sketch of a further embodiment example of a lighting device 100 described here. In this embodiment example, the electrical contacting and the mechanical fastening of the lighting device are carried out by separate elements. The mechanical fastening of the lighting device is carried out via mechanical connectors 78. In the embodiment example of Figure 62A, the mechanical connectors are arranged on the second main surface 102 of the substrate 1 of the lighting device 100. The mechanical connectors 78 are designed as clips, which engage in corresponding recesses for fastening the lighting device 100.

Figure 62B shows a schematic perspective view of a pin connection 75 in a sectional enlargement.

For electrical contacting of the lighting device, the lighting device 100 has a pin connection 75, which is also arranged on the second main surface 102 of the substrate 1. The pin connection 75 comprises multiple pins 75a. At least one of the pins 75a contacts the first electrode 2, at least one second pin 75b contacts the second electrode 3. Further pins 75c may be provided, for example, for contacting a control device 11 integrated in the lighting device 100.

In connection with Figure 63A, a further embodiment example of a lighting device 100 described here is explained in a schematic top view. In this embodiment example, the mechanical connectors 78 to the electrical connection points 70 of the lighting device 100 are also arranged separately. Both the mechanical connectors 78 and the electrical connection points 70 are arranged on the side surfaces 105 of the substrate 1 of

the lighting device 100. The enlarged section of Figure 63B shows a connection point 70. The connection point has, for example, an electrically conductive recess 73 - for example a contact hole - and a connection pin 71, as explained in more detail in connection with Figures 58 and 53.

Figure 64 shows a schematic top view of an embodiment example of an illuminating device 1000 described herein. The illuminating device 1000 comprises at least two lighting devices 100. The lighting devices 100 have connection points arranged on the side surfaces 105 of the substrate 1, which are alternately formed as electrically conductive recesses 73 and contact pins 71. The contact pins 71 of a first lighting device engage in corresponding electrically conductive recesses 73 of a second lighting device. The connection of contact pins 71 and electrically conductive recesses 73 establishes both an electrical and a mechanical connection between the lighting devices 100 of the illuminating device 1000.

The mechanical connection between each two lighting devices 100 is mediated, for example, by a press fit. For this purpose, the diameter of each contact pin 71 is selected to be equal to or greater than the diameter of each electrically conductive recess 73. Pressing the contact pin 71 into the corresponding electrically conductive recess 73 creates a mechanical connection that can only be released again by applying a large mechanical force.

Alternatively, the connection points can be designed as contact plugs - as described in connection with Figures 54 and 55 - or as corresponding connection sockets - as described in connection with Figures 59 and 60. This enables an electrical and mechanical connection of the lighting devices 100, whereby the mechanical connection of the lighting devices 100 can be

released by applying a relatively low mechanical force. This makes it particularly easy to replace a defective lighting device 100 from the illuminating device 1000.

In connection with Figures 66 and 65, a further embodiment example of the illuminating device 1000 is described by means of schematic perspective sketches. In this embodiment example, the lighting devices 100 are applied to a carrier, which is formed as a carrier grid 81. The carrier grid 81 has connection points 82 which are formed, for example, as contact holes, as described in more detail in connection with Figure 58. Alternatively, the contact points 82 can be designed as connection sockets, as explained in more detail in connection with Figures 59 and 60.

Contact pins 71 or contact plugs 72, as described in connection with Figures 53, 54 and 55, form the connection points 70 of the lighting devices 100. The connection points 70 engage in corresponding connection points 82 of the carrier grid 81. A plurality of lighting devices 100 are preferably electrically connected and mechanically fastened to the carrier grid 81. The illuminating device 1000 is supplied with the operating current required to operate the lighting devices 100 by a power supply 10.

In connection with Figures 69 and 65, a further embodiment example of an illuminating device 1000 described herein is explained. In this embodiment example, the illuminating device 1000 has a carrier plate 80 which comprises a plurality of connection points 82. Corresponding connection points 70 of the lighting device 100 engage in the connection points 82 of the carrier plate 80. In the event that the connection points 70 of the lighting device are designed as connection pins 71 or connection plugs 72, the connection points 82 of the carrier plate are designed as electrically conductive recesses

73 or connection sockets 74. In the event that the connection points 70 of the lighting device 100 are designed as electrically conductive recesses 73 or connection sockets 74, the connection points 82 of the carrier plate 80 are designed as connection pins 71 or connection plugs 72.

The illuminating device 1000, as described in connection with Figures 67 and 65, is energized by a power supply 10.

In connection with Figure 68, a further embodiment example of an illuminating device 1000 described herein is explained in a schematic perspective view. The illuminating device 1000 has a carrier that is designed in the form of a cable or rod system. The cable or rod system comprises at least two cables or rods 83 made of an electrically conductive material that run essentially parallel to each other. The ropes or rods 83 are used to power the lighting devices 100 of the illuminating device 1000.

For mechanical attachment and electrical contacting to the cables or rods 83, the lighting device 100 has two connection points, which are designed as connection rails 84, which are arranged on opposite side surfaces 105 of the substrate 1 of the lighting device 100.

The connecting rails 84 are designed in the manner of cut-open cylinders. The connecting rails 84 extend over the entire length of the side surface 105 of the substrate 1 to which they are attached.

The connecting rails 84 preferably engage loosely in the cables or rods 83 of the carrier of the illuminating device 1000 in such a way that the lighting devices 100 of the illuminating device 1000 can be displaced along the cables or rods 83 by applying a relatively low mechanical force. In this

way, it is particularly easy to position the lighting devices 100 along the cables or rods 83. The lighting devices 100 can even be moved along the cables or rods 83 during operation of the illuminating device 1000. Overall, this allows a particularly flexible illuminating device 1000.

In connection with Figure 69, a schematic circuit diagram is used to explain an embodiment example for the interconnection of lighting devices 100 of an illuminating device 1000 described here. In this embodiment example, the lighting devices 100 are connected in parallel to one another. The lighting devices 100 are supplied with operating voltage, for example, from a voltage source 10. The lighting devices 100 may each comprise an integrated control device 11.

In connection with Figure 70, a further embodiment example of an illuminating device 1000 described here is explained by means of a schematic circuit diagram. In this case, the lighting devices 100 of the illuminating device 1000 are connected in series with one another. The lighting devices 100 are supplied with the necessary operating current from a power source 10. The power source 10 may be suitable for self-detecting the number of lighting devices 100 of the illuminating device 1000. The lighting devices 100 may further comprise an integrated control device 11 as described above.

The lighting devices 100 can be detected, for example, by measuring the current or voltage. The possible failure of one or more lighting devices 100 can also be detected during operation.

In connection with Figure 71, a further embodiment example of an illuminating device 1000 described here is explained. In this case, the lighting devices 100 are equipped with a control device 11 as described above. A further control device

11a of the illuminating device 1000 supplies the lighting devices 100 with the necessary operating current and control signals for the control devices 11 of the lighting devices 100.

In connection with Figure 72, a further embodiment example of an illuminating device 1000 described herein is explained by means of a schematic perspective representation. The illuminating device 1000 has multiple lighting devices 100, which are either directly connected to one another by means of the connection and joining techniques described above or which are mounted on a carrier in the manner described above and are electrically connected thereto.

An optical element 60, formed for example by a diffuser plate, is arranged downstream of the lighting devices 100 on their light-emitting front side. The optical element can, for example, be formed by a translucent plate - such as a glass plate - into which light-scattering particles are introduced. Alternatively, it is possible for the surface of the translucent plate to be roughened so that light is diffusely scattered as it passes through the plate due to refraction. The diffuser plate scatters the light from the lighting devices 100 in such a way that the individual lighting devices can no longer be perceived separately by the observer. In this way, a large-area illuminating device 1000 with a particularly large, homogeneous illuminated area is created. The illuminated area of the illuminating device is composed of the light-emitting front sides of the lighting devices of the illuminating device.

In connection with Figure 73, a further embodiment example of an illuminating device 1000 is shown by means of a schematic perspective sketch. The illuminating device 1000 can be used, for example, as a ceiling light. The illuminating device 1000

comprises multiple lighting devices 100, which are either electrically and mechanically connected to each other as described above by connection points on the side surfaces 105 of the substrates 1 of the lighting devices 100 or which are attached and electrically contacted by means of rods or cables 83.

In connection with the schematic perspective representation of Figure 74, a further embodiment example of an illuminating device 1000 is described. The illuminating device 1000 comprises a base in which the power supply 10 and a control device 11 are integrated.

The lighting devices 100 of the illuminating device 1000 are mechanically fastened and electrically connected by means of rods 83. The lighting devices 100 can in turn be the lighting devices described in connection with the above embodiments.

The illuminating device 1000 described in connection with Figure 74 is particularly suitable as a floor or table lamp.

In connection with Figure 75, a display device 1010 is explained in more detail by means of a schematic perspective representation. The display device 1010 comprises an illuminating device 1000 as a backlight for an imaging element 90. The imaging element 90 is, for example, an LCD panel. The LCD panel is directly backlit by the illuminating device 1000. This means that the imaging element 90 is arranged downstream of the illuminating device 1000 in such a way that a large part of the light generated by the illuminating device 1000 during operation strikes the imaging element 90 and backlights it.

The illuminating device 1000, which is used here as a backlighting device, is designed, for example, according to

one of the other embodiments described herein. In this case, the illuminating device comprises at least two lighting devices 100 as described herein.

To homogenize the light intended for backlighting, it is further possible that an optical element 60 is arranged between the imaging element 90 and the light-emitting front side of the lighting devices 100 of the illuminating device 1000, which is then preferably formed as a diffuser plate. The optical element can, for example, be formed by a translucent plate - for example a glass plate - into which light-scattering particles are introduced. Alternatively, it is possible for the surface of the translucent plate to be roughened so that light is diffusely scattered as it passes through the plate due to refraction. The diffuser plate scatters the light from the lighting devices 100 of the illuminating device in such a way that the individual lighting devices are no longer imaged separately on the imaging element 90. In this way, a large-area illuminating device 1000 with a particularly large, homogeneous illuminated area for backlighting the imaging element 90 is created.

In connection with Figure 76, an embodiment example of a coarse-grained display 95 is explained in more detail by means of a schematic top view. The coarse-grained display is designed as an illuminating device with a carrier plate 80 to which a plurality of lighting devices 100 are applied. The lighting devices 100 are arranged, for example, in the manner of a seven-segment display. By energizing certain lighting devices 100, a coarse-grained display 95 is created in this way, which is suitable for displaying digits.

Figure 77 shows a bathroom with lighting devices 100 in the form of tiles. The lighting devices 100 are designed, for example, according to one of the embodiments described further

above. They are glued to the second main surface 102 of the substrate 1, for example on conventional sanitary tiles. A power supply for these lighting devices can be provided by means of induction, for example. In this case, electrical conductors for connecting the lighting devices 100 can be dispensed with. These lighting devices are therefore particularly suitable for use in sanitary areas, as the risk of a short circuit due to moisture is reduced.

A lighting device which is energized by means of induction is disclosed, for example, in the publication DE 102006025115, the disclosure content of which with regard to the structure of such a lighting device is hereby incorporated by reference.

Figure 78 shows a schematic perspective view of an illuminating device 1000 with a lighting device 100 and a second light source 370 according to an embodiment example. The second light source 370 used here is an incandescent lamp, which is inserted into a holder of a carrier 371. Instead of an incandescent lamp as the second light source 370, a halogen lamp can also be used, for example. The incandescent lamp is designed in such a way that it emits white light with a color location in the warm white range of the CIE standard chromaticity diagram during operation. The lighting device, on the other hand, is designed to emit light from the cold white range of the CIE standard color chart during operation. The lighting devices 100 are flexible and permeable to visible light. The lighting device 100 is arranged as a cylindrical lampshade around the incandescent lamp in such a way that a large part of the light emitted by the second light source passes through the lighting device. In this way, mixed-colored light is emitted during operation of the illuminating device, which comprises light from the lighting device 100 and light from the second light source 370.

Furthermore, the lighting device 100 and the second light source 370 are designed to be dimmable, so that the proportion of light from the incandescent lamp and the proportion of light from the lighting device 100 in the mixed-colored light can be varied. Depending on the proportion of light from the incandescent lamp and the light from the illuminating device, the color location can be regulated from cold white to warm white by means of a controller 372 in the holder of the illuminating device. The illuminating device shown in Figure 78 is therefore a color-changing illuminating device.

Figure 79 shows a schematic perspective view of a further embodiment of an illuminating device 1000 with a lighting device 100 and a second light source 370. The illuminating device is intended to be fixed to the wall. The second light source 370 is a lava lamp. The lava lamp comprises wax which is placed in a carrier liquid. During operation of the lava lamp, the wax and the carrier liquid are heated from one side, usually from below, so that the carrier liquid circulates in the lamp due to convection. Furthermore, the wax forms decorative shapes within the carrier liquid due to heating. The carrier liquid usually has a different color than the wax, so that the lava lamp emits mixed-colored light that includes parts of the color of the wax and parts of the color of the carrier liquid.

In the present case, the lava lamp is essentially cylindrical in shape and attached to the wall. The lighting device 100 has a flexible design and is arranged as a half-cylindrical casing around the lava lamp in such a way that the light emitted by the lava lamp, which does not radiate towards the wall, essentially passes through the lighting device. The lighting device 100 further preferably emits light of a color that is not encompassed by the light of the lava lamp. The illuminating device may further be designed to be dimmable,

for example, so that the hue of the light emitted by the illuminating device can be changed in color by dimming the illuminating device. In this way, a color-changing illuminating device is obtained that can create particularly impressive color effects. It is also possible for the lava lamp to be dimmable.

Figure 80A shows a schematic perspective view of an illuminating device according to a further embodiment example. Figure 80B shows a sectional view of the illuminating device of Figure 80A.

The illuminating device according to Figures 80A and 80B is also a color-changing illuminating device 1000, which comprises multiple LEDs 380 mounted on a carrier 381 as additional, second light sources 370. The LEDs 380 emit light of a first color. A milky glass pane is arranged above the LEDs as an optical element 60, through which the light of the LEDs passes during operation of the illuminating device in such a way that the milky glass pane emits colored scattered light of the first color from its front side. Preferably, the milky glass pane scatters the light of the LEDs so that an observer positioned in front of the glass pane perceives a uniform luminous surface.

The milky glass pane also serves as a substrate 1 for a lighting device 100, which emits light of a second color different from the first color and is transparent to visible light. The milky glass pane has an active area to which a first electrode is applied, which is transparent to visible light.

The organic layer stack 4, which is also transparent to visible light, is applied to the first electrode 2. The organic layer stack 4 emits light of a second color, which is

different from the first color. A second electrode 3, which is also transparent to visible light, is applied to the organic layer stack 4. First and second electrodes 2, 3, which are transparent to visible light, are described, for example, with reference to Figure 2A. A glass pane is applied to the second electrode 3 as encapsulation 6, for example by bonding. The glass pane that serves as encapsulation 6 is clear, in contrast to the glass pane that serves as substrate 1.

An illuminating device according to Figures 80A and 80B can be used, for example, as floor lighting in bars or dance floors. Furthermore, such color-changing illuminating devices formed as color-changing light tiles can also be used for medical purposes in light therapy.

Figure 81 shows a further embodiment of an illuminating device 1000 in which at least one further light source is used in addition to a lighting device 100 - in the present case, the lighting device 100 is rigid and planar. Two cold cathode lamps are arranged centrally within the front of the lighting device as second light sources 370. Such an element can be used as a ceiling element, for example.

Figure 82 shows a further embodiment example of an illuminating device 1000 with a lighting device and a second light source. Like the lighting device shown in Figure 81, the lighting device 100 is rigid. An LED module 390 is arranged in the center of the front of the lighting device and comprises a carrier element on which four light-emitting diodes 380 are arranged. Advantageously, the illuminating device 1000 combines point light sources - namely the LEDs of the LED module 390 - with a planar light source - the lighting devices 100. In this way, the user of the illuminating device 1000 can choose between different operating states and combine them with each other.

Figure 83 shows a schematic perspective view of an illuminating device 1000 with a lighting device 100 and a second light source. In the present case, the lighting device 100 is transparent to visible light and emits light of a first color. An organic light-emitting diode is used as the second light source 370, which emits light of a second color. The organic light-emitting diode has a radiation-emitting front side on which the lighting device is arranged. During operation of the illuminating device, the light from the organic light-emitting diode penetrates the lighting device 100, so that the illuminating device 1000 emits mixed-color light comprising light from the lighting device and light from the second light source. The lighting device 100 and the organic light-emitting diode are controlled by a common control device 11.

Figures 84A and 84B show an embodiment example for a storage element AM100 and Figure 84C shows an embodiment example for a storage unit AM1000 with the storage element AM100. Figures 84A and 84B show two schematic sectional views of the storage element AM100. The representation in Figure 84A is a sectional representation of the storage element AM100 along the sectional plane A2 in Figure 84B, seen from the side having the layer AM5, while the representation in Figure 84B is a sectional representation of the storage element AM100 along the sectional plane Al of Figure 84A. Figure 84C shows a schematic sectional view of the storage unit AM1000, wherein the sectional plane shown in the illustration corresponds to the sectional plane of Figure 84B. For a better overview, the arrangement of the storage element AM100 in the storage unit AM1000 is indicated by the dashed area in Figure 84C. The following description refers equally to all figures 84A to 84C.

According to the embodiment example shown, the storage element AM100 of the storage furniture AM1000 can have a substrate AM1 on which a radiation-emitting component formed as an organic light-emitting diode (OLED) AM11 is applied. In particular, the radiation-emitting component may also be a lighting device according to at least one of the embodiments described herein.

On the side opposite the OLED AM11, the substrate has a storage surface AM10. For this purpose, it is particularly advantageous if the substrate AMI has a sufficient thickness and strength so that the storage element AM100 has sufficient stability and strength when objects are arranged on the storage surface AM10. For this purpose, it may additionally be advantageous if the substrate AM1 further comprises support structures by which an increase in stability and strength can be achieved.

The OLED AM11 has a first electrode AM3 on the substrate AM1. A layer sequence AM2 with at least one organic layer can be formed on the first electrode AM3, wherein the layer sequence AM2 has an active area that is suitable for emitting electromagnetic radiation by means of electroluminescence during operation. A second electrode AM4 is applied over the layer sequence AM2. For example, the first electrode AM3 can be designed as an anode and the second electrode AM4 as a cathode. A further layer AM5 can be applied over the second electrode, which can, for example, serve as encapsulation of the OLED AM11. In particular, the substrate AM1 and the layer AM5 can ensure protection of the OLED AM11 from damaging external influences such as moisture or oxygen or mechanical damage. Alternatively, in this and the following embodiments, the radiation-emitting component can be formed as an inorganic electroluminescent film.

The substrate AM1 and the first electrode AM3 can preferably be transparent, so that the electromagnetic radiation generated by the active region of the layer sequence AM2 can be emitted via the deposition surface AM10. For this purpose, the substrate AM1 can preferably have glass or be made of glass. Alternatively or additionally, the substrate AM10 may comprise a transparent plastic or be made of transparent plastic or comprise a layer sequence or a laminate of glass and/or transparent plastic layers. Due to the transparency of the substrate AM1 and the first electrode AM3, it may be possible to illuminate objects placed on the storage surface AM10 from below, i.e. from the storage surface AM10.

Alternatively or additionally, the second electrode AM4 and the layer AM5 can also be transparent, so that the side of the layer AM5 facing away from the OLED AM11 can be designed as an exit surface for the electromagnetic radiation. This makes it possible, for example, to illuminate objects arranged under the storage element AMI00 from above, such as objects located on a further storage element arranged under this storage element AM100. The first electrode AM3 and the second electrode AM4 can have a flat design, as shown in the embodiment example, so that electromagnetic radiation can be emitted over a large area. The layer AM5 can preferably have glass and/or transparent plastic or be made of glass or transparent plastic and can also be formed as a laminate or layer sequence with glass and/or transparent plastic layers.

Furthermore, the storage element AM100 has electrical contacts AM31, AM41, which can each be electrically conductively connected to the first and second electrodes AM3, AM4 by means of electrical lines AM32, AM42. Furthermore, the areas AM9 can be designed as retaining elements in the form of contact surfaces which, as shown here, comprise the electrical contacts AM31, AM41.

The storage unit AM1000 also has holding devices AM7, which can have holding parts AM6 designed as support surfaces. The holding parts AM6, together with the holding elements AM9 of the storage element AM100, for example in the form of support surfaces, can enable the storage element AMI00 to be mounted on the holding devices AM7. The holding devices AM7 can be designed, for example, as cabinet or shelf walls, support posts or struts or as parts thereof, which have suitable holding parts AM6. In particular, the holding parts AM6 can comprise electrical supply contacts AM8, which are electrically conductively connected to the electrical contacts AM31, AM41 of the storage element AM100. The electrically conductive connection between the electrical contacts AM31, AM41 and the electrical supply contacts AM8 can be made possible, for example, by the mechanical contact of the electrical contacts AM31, AM41 and electrical supply contacts AM8, which are each designed as flat surfaces. Alternatively or additionally, the electrical contacts AM31, AM41 and/or the electrical supply contacts AM8 can, for example, be designed as spring elements or plug-in connections to enable an improved electrically conductive connection. The storage element AM100 and the holding devices AM7 can also have further holding elements or holding parts, such as screw connections or clamps (not shown), in order to ensure increased stability of the storage furniture AM1000.

The first electrical contacts AM31, AM41 can be connected to a current and/or voltage supply by means of the electrical supply contacts AM8 integrated in the holding parts AM6. Further electronic or electrotechnical elements for commissioning and controlling the OLED AM11 can be integrated into the holding devices 7, for example.

By integrating the OLED AM11 into the storage element AM100 by arranging the OLED AM11 between the substrate AM11, which also

has the storage surface AM10, and the layer AM5, it is thus possible to create a storage unit AM1000 with a storage element AM100 that enables a large-area radiation surface over the storage surface AM10 and/or over the side of the layer AM5 opposite the OLED with a compact design.

Alternatively or additionally, the OLED AM11 can comprise further layers such as a suitable carrier substrate. This makes it possible, for example, for the OLED AM11, with the first and second electrodes AM3, AM4 and the layer sequence AM2, to be applied to the carrier substrate and to be arranged together with the carrier substrate on the substrate AM1.

Alternatively, the layer AM5 can also comprise a carrier substrate to which the OLED is applied.

The embodiment example for a storage element AM200 shown in Figure 85 represents a modification of the embodiment example according to the preceding figures and shows an organic, light-emitting component in the storage element AM200 with a flat first electrode AM3 with two electrical contacts AM311, AM312, which are electrically conductively connected to the first electrode AM3 via electrical lines AM321, AM322. Furthermore, the second electrode is structured as parallel strips AM401, AM402, which are arranged alternately over the active layer sequence AM2, wherein the parallel strips AM401 are electrically conductively connected to the electrical contact AM411 via the electrical line AM421 and the parallel strips AM402 are connected to the electrical contact AM412 via the electrical line AM422. This allows the second electrode to have sub-regions AM401 and AM402 that can be contacted independently of one another. In particular, this makes it possible for the regions of the active region of the layer sequence AM2 of the OLED AM11 arranged between the subregions AM401, AM402 of the second electrode and the first electrode

AM3 to emit electromagnetic radiation independently of one another. For example, the active region of the OLED AM11 can also be structured so that the subregion of the OLED AM11 arranged between the subregion AM401 of the second electrode and the first electrode AM3 can emit electromagnetic radiation with a first spectrum and the subregion of the OLED arranged between the subregion AM402 of the second electrode AM4 and the first electrode AM3 can emit electromagnetic radiation with a second spectrum, wherein the first and the second spectrum can be different. By applying a current and/or a voltage between at least one of the electrical contacts AM311, AM312 and in each case one of the electrical contacts AM411 and AM412 or both, three different operating states with different light impressions can thus be made possible for an observer. For example, the first spectrum can have one or more wavelengths in the blue spectral range and the second spectrum can have one or more wavelengths in the yellow or orange spectral range, so that the three operating states can enable a blue, a yellow or orange-colored and, if the blue is superimposed with the yellow or orange-colored luminous impression, a white-colored luminous impression.

Alternatively, the first electrode can also be structured while the second electrode can be flat, or both electrodes are formed as large-area electrode surfaces. In particular, an electrode can have any desired and suitable structure, for example in the form of pictograms, in order to create a visual impression for the observer in addition to the lighting impression.

Particularly preferably, the storage element AM200 has holding elements (not shown) which comprise the electrical contacts AM311, AM312, AM411, AM412. Such retaining elements can be, for example, contact surfaces, openings, holes and parts of screw, plug or clamp connections. A suitable holding device

can then have corresponding holding parts, which in particular can also advantageously have electrical supply contacts.

The embodiment example shown in Figure 86 for a storage element AM300 shows, as a further modification to the preceding embodiment examples for a storage element, in addition to the second electrode, which is structured in sub-areas AM401, AM402 with parallel strips, also the first electrode, which is structured in sub-areas AM301, AM302 with parallel strips. The sub-areas AM301, AM302 can each be electrically conductively connected to electrical contacts AM311, AM312 via electrical lines AM321, AM322. The first electrode can have parallel strips AM301, AM302 which are, for example, perpendicular to the parallel strips AM401, AM402 of the second electrode. This means that the OLED can, for example, have pixel-like sub-regions, which are given by parallel-connected crossing points of the electrode sub-regions AM301, AM302 and AM401, AM402. In particular, in this embodiment example, the layer sequence AM2 or at least the active area of the layer sequence AM2 of the OLED can be structured in such a way that by applying a current and/or a voltage between one or both sub-areas AM301, AM302 of the first electrode and one or both sub-areas AM401, AM402 of the second electrode, different operating states with different luminous impressions can be created for an observer by means of different radiation spectra and their mixed spectra. For example, by applying a voltage and/or a current between the electrical contacts AM311 and AM411, AM312 and AM411, AM311 and AM412 as well as AM312 and AM412, a checkerboard-like lighting impression can be created for an observer, whereas the application of a voltage and/or a current between the electrical contacts AM311 and AM312 and one of the electrical contacts AM411 and AM412 as well as between one of the electrical contacts AM311 or AM312 and the electrical contacts AM411 and AM412 can each create a luminous impression of line-

like arranged pixel-like partial areas for an observer. By applying a voltage and/or a current between all contacts of the first and second electrodes, a planar luminous impression can be made possible for an observer.

In addition, a diffuser plate, for example, can also be arranged downstream of the organic radiation-emitting component in the beam path of the emitted electromagnetic radiation, so that a more homogeneous and more planar luminous impression of the various operating states described above can be made possible for an observer.

In particular, the shape, the size and the distance between the structured partial areas of the first and second electrodes can be selected according to the desired lighting impression and is shown purely by way of example in the preceding embodiment examples.

The embodiment example for a storage element AM400 according to Figure 87 shows, for example, a top view of the storage element with an organic radiation-emitting component with first electrodes AM301, AM302 and second electrodes AM401, AM402 and a layer sequence AM2 with an active area, which are arranged only in edge regions of the substrate AM1. This makes it possible, for example, to illuminate objects arranged on the storage surface AM10 and/or under the storage element AM400 from the side. In particular, a radiating surface can additionally have optical structures through which the electromagnetic radiation can preferably be radiated into the spatial region between the subregions AM301, AM401 and AM302, AM402 of the first and second electrodes.

The embodiments shown in the preceding figures, in particular in Figures 85 to 87, for a structuring of the first and/or the second electrode are to be understood as purely exemplary and

not limiting. In particular, the first and/or the second electrode may have more than two sub-areas AM301, AM3 02 or AM401, AM402 and accordingly also more than two electrical contacts AM311, AM312 or AM411, AM412. In particular, the shape and arrangement of the electrical contacts and/or the holding elements can also deviate from the shapes and arrangements shown.

Figure 88 shows an embodiment example of a storage unit AM2000 with storage elements AM101, AM102. For the sake of clarity, the storage elements AM101, AM102 are only indicated by the dashed areas and can, for example, be designed according to one of the preceding embodiments.

The storage unit AM2000 has four holding devices AM7, which are designed as vertical posts or struts. In addition, in further embodiments of the invention, the holding devices AM7 can also be parts of furniture walls. The holding devices AM7 can have holding parts AM6, which are suitable for mounting the storage elements AM101, AM102 to the holding devices AM7. In this respect, the storage elements AMI01, AM102 can have suitable retaining elements for this purpose (not shown in Figure 88). Furthermore, it can be advantageous if the holding parts AM6 comprise electrical supply contacts (not shown in Figure 88), which enable electrical contacting of the organic radiation-emitting components of the storage elements AM101, AM102 via their electrical contacts AM311, AM312, AM411, AM412 (not shown in Figure 88).

The embodiments shown in Figures 89A to 89E show, in a top view, examples of the number and arrangement of electrical contacts and/or holding elements on storage elements AM101 and of electrical supply contacts and/or holding parts in holding devices AM7 for pieces of storage furniture. The arrows indicate the type of arrangement of the storage elements AM101

in the holding devices AM7, which are shown spatially separated from each other for the sake of clarity. For example, the arrows can represent that the storage element is pushed into the relevant holding device, whereby a fixed mounting can then take place if necessary. The reference symbols AM51 to AM55 can indicate electrical contacts, retaining elements and retaining elements that comprise electrical contacts. Similarly, the reference symbols AM711 to AM715 can indicate electrical supply lines, retaining parts and retaining parts comprising electrical supply lines. In addition, the sizes, distances, positions and number of electrical contacts or retaining elements AM51 to AM55 and the electrical supply line contacts or retaining parts AM711 to AM715 are shown purely by way of example.

For example, a support device AM7 may be one or more furniture walls, a frame, vertical or horizontal braces, wall-mountable braces, wall-mountable support frames, or parts thereof, which may be suitable for supporting a storage element AM101 so that the storage surface of the storage element AMI01 is substantially parallel to a floor on which the support device AM7 may be placed, or substantially perpendicular to a wall to which the support device may be attached or mounted.

For example, retaining elements AM51, AM52 or retaining parts AM711, AM712 can be designed as rails or parts of a rail system, as shown in Figure 89A. In addition, as shown in Figure 89B, for example, a further retaining element AM53 can be designed as a support surface and a further retaining part AM713 as a support surface. If the holding elements AM51, AM52, AM53 comprise electrical contacts and the holding parts AM711, AM712, AM713 comprise electrical supply contacts, the embodiment example shown can be suitable, for example, for a storage element AM400 as shown in Figure 87. The further embodiment examples, according to Figures 89C to 89E, show

further possibilities with at least four holding elements/electrical contacts or at least four holding parts/electrical supply line contacts.

In particular, some holding parts or holding elements can have electrical contacts or electrical supply contacts and others cannot.

The invention is not limited by the description based on the embodiments. Rather, the invention includes any new feature as well as any combination of features, which includes in particular any combination of features in the patent claims, even if this feature or combination itself is not explicitly stated in the patent claims or embodiments.

This patent application claims the priorities of the following German patent applications: DE102006046293.9, DE102006060781.3, DE102006046198.3 and DE102006054584.2. The disclosure of these priority applications is hereby incorporated by reference.

Claims

1. Lighting device (100) with:
- a substrate (1) having a first main surface (101) to which a first electrode (2) is applied,
- a second electrode (3), and
- an organic layer stack (4) within an active region (5) of the substrate (1) between the first and second electrodes (3), wherein the organic layer stack (4) comprises at least one organic layer (401) capable of generating light.

2. The lighting device (100) according to the previous claim, wherein the first electrode (2) is transmissive for a light emitted by the organic layer stack (4) during operation.

3. The lighting device (100) according to at least one of the preceding claims, wherein the second electrode (3) is transmissive for a light emitted from the organic layer stack (4) during operation.

4. The lighting device (100) according to at least one of the preceding claims, wherein at least one of the first and second electrodes (3) comprises a transparent conductive oxide, a metal transmissive to a light emitted by the organic layer stack (4), or a conductive organic material.

5. The lighting device (100) according to at least one of the preceding claims, wherein at least one of the electrodes (2, 3) comprises electrically conductive tracks (2011, 2012, 2013).

6. The lighting device (100) according to the previous claim, wherein the electrically conductive tracks (2011, 2012, 2013) comprise a metal.

7. The lighting device (100) according to at least one of the preceding claims, wherein the electrically conductive tracks (2011, 2012, 2013) have a multilayer structure.

8. The lighting device (100) according to at least one of the above claims, wherein the metallic tracks (2011, 2012, 2013) form a grid which is transparent to a light generated by the layer stack.

9. The lighting device (100) according to at least one of the preceding claims, wherein the metallic tracks (2011, 2012, 2013) have a thickness of at most 1.5 µm.

10. The lighting device (100) according to at least one of the preceding claims, wherein the organic layer stack (4) comprises a doped organic layer (402) with a dopant (410) arranged between the at least one organic layer and one of the electrodes.

11. The lighting device (100) according to the previous claim, wherein the doped organic layer forms an outermost layer of the organic layer stack (4).

12. The lighting device (100) according to at least one of the preceding claims, wherein the active region (5) is arranged in an encapsulation (6).

13. The lighting device (100) according to the previous claim, wherein the encapsulation (6) is transparent to a light generated by the organic layer stack (4) during operation.

14. The lighting device (100) according to at least one of the preceding claims, wherein the encapsulation (6) comprises glass.

15. The lighting device (100) according to at least one of the preceding claims, wherein the encapsulation (6) is formed by a thin film encapsulation (6) with at least one barrier layer (601, 602).

16. The lighting device (100) according to the previous claim, wherein the barrier layer (601, 602) comprises one of the following materials: silicon oxide, silicon nitride.

17. The lighting device (100) according to at least one of the preceding claims, in which the thin-film encapsulation (6) comprises multiple alternating barrier layers (601, 602), wherein at least two barrier layers which differ in terms of their material composition are arranged in regular succession.

18. The lighting device (100) according to the previous claim, wherein one alternating barrier layer (601) comprises a silicon oxide and the other alternating barrier layer (602) comprises a silicon nitride.

19. The lighting device (100) according to at least one of the preceding claims, wherein the thin film encapsulation (6) comprises at least one polymer intermediate layer (604) arranged between two barrier layers (601, 602).

20. The lighting device 100 according to at least one of the preceding claims, wherein the thin film encapsulation (6)

comprises a protective varnish layer (603) as outermost layer.

21. The lighting device (100) according to the previous claim, wherein an organic planarization layer (7) is arranged between the second electrode (3) and the thin film encapsulation (6).

22. The lighting device (100) according to the previous claim, wherein the organic planarization layer (7) comprises scattering centers (701).

23. The lighting device (100) according to the previous claim, wherein the organic planarization layer (7) comprises a luminescence conversion material.

24. The lighting device (100) according to at least one of the preceding claims, wherein the lighting device (100) is free of any getter material.

25. The lighting device (100) according to at least one of the preceding claims, comprising a getter material (611).

26. The lighting device (100) according to the previous claim, wherein the getter material (611) is arranged in the active region (5).

27. The lighting device (100) according to at least one of the preceding claims, wherein the getter material (611) is arranged outside the active area (5).

28. The lighting device (100) according to at least one of the preceding claims, wherein the getter material (611) is

transmissive for a light generated by the organic layer stack (4).

29. The lighting device (100) according to at least one of the preceding claims, wherein the substrate (1) is the glazing of a window (20).

30. The lighting device (100) according to at least one of the preceding claims, wherein the encapsulation (6) is the glazing of a window (20).

31. The lighting device (100) according to at least one of the preceding claims, wherein the substrate (1) is milky.

32. The lighting device (100) according to at least one of the preceding claims, wherein the encapsulation (6) is milky.

33. The lighting device (100) according to at least one of the preceding claims, comprising an electrical lead (9) on the substrate (1), which electrically conductively connects an electrode and a connection point (70).

34. The lighting device (100) according to the previous claim, wherein the electrical lead (9) is arranged outside the active area (5).

35. The lighting device (100) according to at least one of the preceding claims, wherein the electrical supply line (9) is designed to be transmissive for a light generated by the organic layer stack (4).

36. The lighting device (100) according to at least one of the preceding claims, wherein the electrical supply line (9) contains a metal.

37. The lighting device (100) according to at least one of the preceding claims, wherein the electrical supply line (9) comprises a transparent conductive oxide.

38. The lighting device (100) according to at least one of the preceding claims, comprising a reflective layer sequence.

39. The lighting device (100) according to the previous claim, wherein the reflective layer sequence comprises a dielectric mirror.

40. The lighting device (100) according to at least one of the preceding claims, comprising an anti-reflective layer sequence.

41. The lighting device (100) according to the previous claim, wherein the anti-reflective layer sequence comprises a dielectric material.

42. The lighting device (100) according to at least one of the preceding claims, wherein the first electrode (2) or the second electrode (3) is reflective.

43. The lighting device (100) according to the previous claim, wherein the reflective electrode comprises silver or gold.

44. The lighting device (100) according to at least one of the preceding claims, wherein the encapsulation (6) is reflective.

45. The lighting device (100) according to the previous claim, wherein the reflective encapsulation (6) comprises a metal cap.

46. The lighting device (100) according to at least one of the preceding claims, wherein the reflective encapsulation (6) comprises a getter material (611) that is transmissive to a light generated by the organic layer stack (4).

47. The lighting device (100) according to at least one of the preceding claims, wherein the reflective encapsulation (6) is formed by a reflective thin film encapsulation (6) with at least one barrier layer (601, 602).

48. The lighting device (100) according to at least one of the preceding claims, wherein the reflective thin film encapsulation (6) comprises at least one of the following layers: a silver layer (337a), a copper layer (337b).

49. The lighting device (100) according to at least one of the preceding claims, wherein the substrate (1) is reflective.

50. The lighting device (100) according to at least one of the preceding claims, wherein the encapsulation (6) is flexible.

51. The lighting device (100) according to at least one of the preceding claims, wherein the substrate (1) is flexible.

52. The lighting device (100) according to at least one of the preceding claims, wherein the flexible substrate (1) is made of a metal.

53. The lighting device (100) according to at least one of the preceding claims, wherein the flexible substrate (1) comprises at least one of the following materials: aluminum, stainless steel, plastic.

54. The lighting device (100) according to at least one of the preceding claims, wherein the flexible substrate (1) is formed as a foil.

55. The lighting device (100) according to at least one of the preceding claims, wherein the flexible substrate (1) is formed as a laminate comprising at least a first (103) and a second (104) layer.

56. The lighting device (100) according to the previous claim, wherein the material from which the first layer (103) is made differs from the material from which the second layer is made of (104).

57. The lighting device (100) according to at least one of the preceding claims, wherein the substrate (1) comprises at least a first layer made of a plastic and at least a second layer made of a glass.

58. The lighting device (100) according to at least one of the preceding claims, wherein the slat (21) of a blind (22) serves as the substrate (1).

59. The lighting device (100) according to at least one of the preceding claims, wherein an adhesive layer (30) is applied to the second main surface (102) of the substrate (1) facing away from the first main surface (101).

60. The lighting device (100) according to the previous claim, wherein a removable protective film (31) is applied to the adhesive layer (30).

61. The lighting device (100) according to at least one of the preceding claims, comprising at least a first color sub-region (50) adapted to emit light of a first color and at least a second color sub-region (51) adapted to emit light of a second color, wherein the first color is different from the second color.

62. The lighting device (100) according to at least one of the preceding claims, wherein the first and second color sub-regions (50, 51) are arranged in a common plane.

63. The lighting device (100) according to at least one of the preceding claims, wherein the first and second color sub-regions (50, 51) are arranged vertically one above the other.

64. The lighting device (100) according to at least one of the preceding claims, wherein the first color sub-region (50) comprises a first organic emitter material and the second color sub-region (51) comprises a second organic

emitter material, wherein the first emitter material is different from the second emitter material.

65. The lighting device (100) according to at least one of the preceding claims, comprising at least one color sub-region (50, 51) comprising a color filter.

66. The lighting device (100) according to at least one of the preceding claims, wherein the first color sub-region (50) comprises a first color filter and the second color sub-region (51) comprises a second color filter, wherein the first color filter is different from the second color filter.

67. The lighting device (100) according to at least one of the preceding claims, comprising at least one color sub-region (50, 51) comprising a luminescence conversion material (52, 53).

68. The lighting device (100) according to at least one of the preceding claims, wherein the first color sub-region (50) comprises a first luminescence conversion material (52) and the second color sub-region (51) comprises a second luminescence conversion material (53), wherein the first luminescence conversion material (52) is different from the second luminescence conversion material.

69. The lighting device (100) according to at least one of the preceding claims, comprising at least a third color sub-region adapted to emit light of a third color, wherein the third color is different from the first and the second color.

70. The lighting device (100) according to at least one of the preceding claims, comprising at least one fourth color sub-region suitable for emitting light of a fourth color, wherein the fourth color is different from the first, the second and the third color.

71. The lighting device (100) according to at least one of the preceding claims, having at least one color sub-region which is suitable for emitting white light.

72. The lighting device (100) according to at least one of the preceding claims, wherein at least the first and second color sub-regions (51) are independently controllable.

73. The lighting device (100) according to at least one of the preceding claims, wherein similarly designed color sub-regions can be controlled together.

74. The lighting device (100) according to at least one of the preceding claims, having a control device (11) which is provided to set the operating state of the lighting device (100).

75. The lighting device (100) according to the previous claim, wherein the control device (11) is arranged on the first main surface (101) of the substrate (1).

76. The lighting device (100) according to at least one of the preceding claims, wherein the control device (11) is encapsulated with the organic layer stack (4) in a common encapsulation (6).

77. The lighting device (100) according to at least one of the preceding claims, wherein the control device (11) is provided to control at least two color sub-regions independently of each other.

78. The lighting device (100) according to at least one of the preceding claims, wherein the control device (11) comprises a pulse width modulation circuit (12).

79. The lighting device (100) according to at least one of the preceding claims, wherein the control device (11) is controllable by a user.

80. The lighting device (100) according to at least one of the preceding claims, wherein the color of the emitted light is adjustable by means of the control device (11).

81. The lighting device (100) according to at least one of the preceding claims, wherein the first and second color sub-regions (51) are connected antiparallel to each other.

82. The lighting device (100) according to at least one of the preceding claims, wherein the color of the light emitted by the lighting device (100) depends on the current density of the current used to energize the lighting device (100).

83. The lighting device (100) according to the previous claim, comprising a control device (11) which is provided to adjust the current density of the current used to energize the lighting device (100).

84. The lighting device (100) according to at least one of the preceding claims, wherein the color of the light emitted by the lighting device (100) depends on the strength of the current used to energize the lighting device (100).

85. The lighting device (100) according to the previous claim, comprising a control device (11) which is provided to adjust the strength of the current used to energize the lighting device (100).

86. The lighting device (100) according to at least one of the preceding claims, wherein the color of the light emitted by the lighting device (100) depends on the duration of time that the lighting device (100) is energized.

87. The lighting device (100) according to the previous claim, comprising a control device (11) provided to adjust the duration of time that the lighting device (100) is energized.

88. The lighting device (100) according to at least one of the preceding claims, comprising a sensor (65) suitable for determining the color location and/or the brightness of the light emitted by the lighting device (100) during operation.

89. The lighting device (100) according to the previous claim, with a control device (11) which is provided to energize the lighting device (100) depending on the measured value determined by the sensor (65).

90. The lighting device (100) according to at least one of the preceding claims, having at least one connection point (70) which is provided for making electrical contact with the lighting device (100).

91. The lighting device (100) according to at least one of the preceding claims, wherein a connection point (70) is arranged on the second main surface (102) of the substrate (1) facing away from the first main surface (101).

92. The lighting device (100) according to at least one of the preceding claims, wherein a connection point (70) is arranged on a side surface of the substrate (1).

93. The lighting device (100) according to at least one of the preceding claims, wherein at least one connection point (70) is designed as a connection pin (71).

94. The lighting device (100) according to at least one of the preceding claims, wherein at least one connection point (70) is designed as a recess (73).

95. The lighting device (100) according to at least one of the preceding claims, wherein at least one connection point (70) is designed as a connection socket (74).

96. The lighting device (100) according to at least one of the preceding claims, wherein at least one connection point (70) comprises a plurality of connection pins (75a, 75b, 75c).

97. The lighting device (100) according to at least one of the preceding claims, wherein at least one connection point

(70) is designed as a connection rail (84) extending along a side surface of the substrate (1).

98. The lighting device (100) according to the previous claim, wherein the connecting rail (84) extends over at least 80% of the length of the side surface.

99. The lighting device (100) according to at least one of the preceding claims, wherein at least one of the connection points (70) is provided for mechanical fastening of the lighting device (100).

100. The illuminating device (1000) with at least one lighting device (100) according to at least one of the preceding claims.

101. The illuminating device (1000) according to the previous claim, comprising at least two lighting devices (100) which are electrically and mechanically connected to each other.

102. The illuminating device (1000) according to at least one of the preceding claims, having a first lighting device (100) and a second lighting device (100), in which the first lighting device (100) has at least one connection point (70) which is designed as a connection pin (71) which is arranged on a side surface of the substrate (1) of the first lighting device (100), the connection pin (71) engaging in a connection point (70) of the second lighting device (100), which is designed as a recess (73) in a side surface of the second lighting device (100).

103. The illuminating device (1000) according to the previous claim, in which the first and second lighting devices (100)

are mechanically connected to one another through the connection points (70) by means of an interference fit.

104. The illuminating device (1000) according to the previous claim, in which the first and the second lighting devices (100) are mechanically connected to one another through the connection points (70) by means of an interference fit.

105. The illuminating device (1000) according to the previous claim, in which the first and the second lighting devices (100) are mechanically connected to one another through the connection points (70) by means of a plug-in connection.

106. The illuminating device (1000) according to at least one of the preceding claims, having a carrier by means of which the lighting devices (100) of the illuminating device (1000) are mechanically connected to one another.

107. The illuminating device (1000) according to at least one of the preceding claims, having a carrier via which the lighting devices (100) of the illuminating device (1000) are electrically connected.

108. The illuminating device (1000) according to at least one of the preceding claims, having a carrier to which the lighting devices (100) of the illuminating device (1000) are mechanically and electrically connected.

109. The illuminating device (1000) according to at least one of the preceding claims, wherein the carrier is designed as a carrier plate (80).

110. The illuminating device (1000) according to at least one of the preceding claims, wherein the carrier is designed as a carrier grid (81).

111. The illuminating device (1000) according to at least one of the preceding claims, wherein the carrier is designed as a cable system (83).

112. The illuminating device (1000) according to at least one of the preceding claims, wherein the support is designed as a rod system (83).

113. The illuminating device (1000) according to at least one of the preceding claims, in which at least one lighting device (100) is mechanically and electrically connected to the carrier by means of a connection point (70), which is designed as a connection pin (71).

114. The illuminating device (1000) according to at least one of the preceding claims, in which at least one lighting device (100) is mechanically and electrically connected to the carrier by means of a connection point (70), which is designed as a connection rail (84).

115. The illuminating device (1000) according to at least one of the preceding claims, having a first lighting device (100) and a second lighting device (100), wherein the first and the second lighting device (100) emit light of different colors during operation.

116. The illuminating device (1000) according to at least one of the preceding claims, wherein an optical element (60)

containing a diffuser material is arranged downstream of the lighting devices (100) in a radiation direction.

117. The illuminating device (1000) according to at least one of the above claims, comprising:
- a plurality of lighting devices (100), wherein the lighting devices (100) are arranged in a matrix, and
- a control device (11) adapted to control each of the lighting devices (100) independently of the remaining lighting devices (100).

118. The illuminating device (1000) according to the previous claim, wherein at least one of the lighting devices (100) is adapted to emit light of a first color during a first period of time and to emit light of a second color during a second period of time, the first color being different from the second color.

119. The illuminating device (1000) according to at least one of the preceding claims, wherein the carrier comprises a textile material (25, 27).

120. The illuminating device (1000) according to at least one of the preceding claims, wherein the carrier is designed as a curtain (25).

121. The illuminating device (1000) according to at least one of the preceding claims, wherein the carrier is designed as a garment (27).

122. The illuminating device (1000) according to at least one of the preceding claims, comprising a lighting device (100) as a first light source and a second light source.

123. The illuminating device (1000) according to at least one of the preceding claims, wherein the lighting device (100) emits light of a first color and the second light source (370) emits light of a second color different from the first color.

124. The illuminating device (1000) according to at least one of the preceding claims, wherein the first color is in the blue spectral range and the second color is in the yellow spectral range.

125. The illuminating device (1000) according to at least one of the preceding claims, wherein the first color is in the yellow spectral range and the second color is in the blue spectral range.

126. The illuminating device (1000) according to at least one of the preceding claims, wherein the lighting device (100) is dimmable.

127. The illuminating device (1000) according to at least one of the preceding claims, wherein the second light source (370) is dimmable.

128. The illuminating device (1000) according to at least one of the preceding claims, wherein the second light source (370) is made by at least one of the following elements: an incandescent lamp, at least one single light emitting diode, a light emitting diode module, a cold cathode lamp, a fluorescent lamp, a lava lamp, an organic light emitting diode.

129. The illuminating device (1000) according to at least one of the preceding claims, wherein the lighting device (100) and the second light source are arranged relative to each other so that light from the second light source (370) passes through the lighting device (100).

130. The illuminating device (1000) according to at least one of the preceding claims, wherein the lighting device (100) is formed as a lampshade.

131. The illuminating device (1000) according to at least one of the preceding claims, wherein:
- the lighting device (100) emits light of a first color and the second light source (370) emits light of a second color different from the first color,
- at least one of the two light sources is dimmable, and
- the lighting device (100) and the second light source are arranged relative to each other in such a way that light from the second light source passes through the lighting device (100).

132. The illuminating device (1000) according to at least one of the preceding claims, wherein the first color is in the blue spectral range and the second color is in the yellow spectral range.

133. The illuminating device (1000) according to at least one of the preceding claims, wherein the first color is in the yellow spectral range and the second color is in the blue spectral range.

134. The illuminating device (1000) according to at least one of the preceding claims, wherein the first color is in the

warm white range of the CIE standard chromaticity diagram and the second color is in the cool white range of the CIE standard chromaticity diagram.

135. The illuminating device (1000) according to at least one of the preceding claims, wherein the first color is in the cool white range of the CIE standard chromaticity diagram and the second color is in the warm white range of the CIE standard chromaticity diagram.

136. The illuminating device (1000) according to at least one of the preceding claims, wherein the lighting device (100) and the second light source are designed to be dimmable.

137. The illuminating device (1000) according to at least one of the preceding claims, wherein the lighting device (100) is designed as a lampshade.

138. The illuminating device (1000) according to at least one of the preceding claims, wherein a radiation-emitting front side of the lighting device (100) and a radiation-emitting front side of the second light source are arranged in a common plane.

139. The illuminating device (1000) according to at least one of the preceding claims, wherein an LED module (390) is used as the second light source (370), which is arranged within the radiation-emitting front side of the lighting device (100).

140. The illuminating device (1000) according to the previous claim, the LED module (390) being arranged centrally within the radiation-emitting front side of the lighting device.

141. Optical display device comprising:
- an imaging element and
- at least two lighting devices (100) according to at least one of the preceding claims, wherein the lighting devices (100) form a backlighting device for the imaging element (90).

142. Optical display device according to the previous claim, wherein the lighting devices (100) are electrically and mechanically interconnected.

143. Optical display device according to at least one of the preceding claims, wherein at least one lighting device (100) is adapted to emit white light.

144. Optical display device according to at least one of the preceding claims, having a first lighting device (100) and a second lighting device (100), in which the first lighting device (100) has at least one connection point (70) which is designed as a connection pin (71) which is arranged on a side surface of the substrate (1) of the first lighting device (100), the connection pin (71) engaging in a connection point (70) of the second lighting device (100), which is designed as a recess (73) in a side surface of the second lighting device (100).

145. Optical display device according to the previous claim, in which the first and the second lighting devices (100) are mechanically connected to one another through the connection points (70) by means of an interference fit.

146. Optical display device according to at least one of the preceding claims, comprising a carrier to which the

lighting devices (100) of the optical display device are mechanically connected.

147. Optical display device according to at least one of the preceding claims, comprising a carrier to which the lighting devices (100) of the optical display device are electrically connected.

148. Optical display device according to at least one of the preceding claims, comprising a carrier to which the lighting devices (100) of the optical display device are mechanically and electrically connected.

149. Optical display device according to at least one of the preceding claims, wherein the carrier is designed as a carrier plate (80).

150. Optical display device according to at least one of the preceding claims, wherein the carrier is designed as a carrier grid (81).

151. Optical display device according to at least one of the preceding claims, wherein at least one lighting device (100) is mechanically and electrically connected to the carrier by means of a connection point (70), which is designed as a connection pin (71).

152. Optical display device according to at least one of the preceding claims, wherein an optical element (60) containing a diffuser material is arranged downstream of the lighting devices (100) in a radiation direction.

153. Optical display device according to at least one of the preceding claims, wherein the lighting devices (100) are arranged in a matrix-like manner.

154. The emergency lighting device (395) comprising a lighting device (100) according to at least one of the preceding claims.

155. The emergency lighting device (395) comprising an illuminating device (1000) according to at least one of the above claims.

156. The motor vehicle interior lighting (396) comprising a lighting device (100) according to at least one of the above claims.

157. The motor vehicle interior lighting (396) comprising an illuminating device (1000) according to at least one of the above claims.

158. Piece of furniture (33) comprising a lighting device (100) according to at least one of the above claims.

159. Piece of furniture (33) with an illuminating device (1000) according to at least one of the above claims.

160. Building material with a lighting device (100) according to at least one of the above claims.

161. Building material with an illuminating device (1000) according to at least one of the above claims.

162. Glazing with a lighting device according to at least one of the above claims, wherein the lighting device (100) is arranged between two glass plates of a window (20) glazing.

163. Glazing according to at least one of the preceding claims, which has a main surface to which a blind (22) is arranged in parallel.

164. Glazing according to at least one of the above claims, wherein the blind (22) is reflective.

165. Display with a lighting device (100) according to at least one of the above claims.

166. Display with an illuminating device (1000) according to at least one of the above claims.

167. Piece of storage furniture, comprising
- a flat-shaped storage element (AM100) with at least one storage surface (AM10) and at least one radiation-emitting component (AM11), which is in particular a lighting device (100) according to at least one of the above claims, and
- at least one holding device (AM7) for holding the storage element (AM100).

168. Piece of storage furniture according to the above claim, wherein the radiation-emitting component (AM11) comprises at least the following elements:
- a first and a second electrode (AM3, AM4),
- and at least one active region positioned between the first and second electrodes (AM3, AM4).

169. Piece of storage furniture according to the preceding claim, wherein the first and/or the second electrode (AM3, AM4) of the radiation-emitting component (AM11) is structured.

170. Piece of storage furniture according to one of claims 168 or 169, wherein the radiation-emitting component (AM11) is an organic light-emitting diode comprising at least one organic layer (AM2).

171. Piece of storage furniture according to one of the preceding claims, wherein the storage element (AM100) comprises holding elements (AM9) by means of which the storage element (AM100) is mountable to the holding device (AM7).

172. Piece of storage furniture according to one of the preceding claims, wherein the storage element (AM100) comprises at least two electrical contacts (AM31, AM41) for electrically contacting the radiation-emitting component (AM11).

173. Piece of storage furniture according to the preceding claim, wherein the first and second electrodes (AM3, AM4) are connected by different electrical contacts (AM31, AM41).

174. Piece of storage furniture according to claim 171, wherein the storage element (AM100) comprises at least two electrical contacts (AM31, AM41) for electrically contacting the radiation emitting component (AM11) and the holding elements (AM9) comprise the electrical contacts (AM31, AM41).

175. Piece of storage furniture according to claim 171, wherein the holding device (AM7) has holding parts (AM6) to which the storage element (AM100) can be mounted on the holding device (AM7) by means of its holding elements (AM9).

176. Piece of storage furniture according to claim 172 or 173, wherein the holding device (AM7) comprises at least two electrical supply contacts (AM8) for electrically contacting the radiation-emitting component (AM11) and the electrical contacts (AM31, AM41) of the storage element (AM100) are electrically conductively connected to the electrical supply contacts (AM8).

177. Piece of storage furniture according to the preceding claim, wherein the holding device (AM7) has holding parts (AM6) to which the storage element (AM100) can be mounted on the holding device (AM7) by means of its holding elements (AM9) and the holding parts (AM6) comprise the electrical supply contacts (AM8).

178. Piece of storage furniture according to one of the preceding claims, wherein the holding device (AM7) comprises at least one element from a group formed by: a rail, a holding bracket, a support arm, a strut, a post, a furniture wall.

179. Piece of storage furniture according to any one of the preceding claims, wherein the storage element (AM100) has an n-cornered, circular or elliptical shape or a combination thereof, wherein n is an integer greater than or equal to 3.

180. Piece of storage furniture according to the preceding claim, wherein the storage element (AM100) has an angular shape and a holding device (AM7) is arranged at least in one corner of the storage element (AM100).

181. Piece of storage furniture according to one of the preceding claims, wherein the radiation-emitting component (AM11) has at least one exit surface for the electromagnetic radiation and wherein the exit surface is at least a part of an outer surface of the storage element.

182. Piece of storage furniture according to the preceding claim, wherein the outer surface is the storage surface (AM10).

183. Piece of storage furniture according to claim 180 or 181, wherein the outer surface is arranged on a side of the storage element facing away from the storage surface (AM10).

184. Piece of storage furniture according to any one of the preceding claims, wherein the storage element (AM100) comprises a top surface, a bottom surface and side surfaces, and the radiation-emitting component is mounted on any of the top surface, the bottom surface and the side surfaces.

185. Piece of storage furniture according to any one of claims 167 to 183, wherein the radiation-emitting component is integrated into the flat shaped storage element (AM100).

186. Piece of storage furniture according to any one of the preceding claims, wherein the radiation-emitting component is formed flat.

187. Piece of storage furniture according to one of the preceding claims, wherein the holding device (AM7) is suitable for holding the storage element (AM100) in such a way that at least partial regions of the storage surface (AM10) are substantially parallel to a floor above which the storage element (AM100) can be arranged.

188. Piece of storage furniture according to any one of the preceding claims, wherein the holding device (AM7) is suitable for holding the storage element (AM100) so that at least partial regions of the storage surface (AM10) are substantially perpendicular to a wall on which the piece of storage furniture can be mounted or placed.

189. Piece of storage furniture according to any one of the preceding claims, wherein the piece of storage furniture comprises a plurality of storage elements (AM101, AM102).

190. Piece of storage furniture according to the preceding claim, wherein the plurality of storage elements (AM101, AM102) are arranged relative to each other so that the respective storage surfaces are parallel to each other.

191. The illuminating device (1000) according to at least one of the preceding claims, wherein at least two rigid lighting devices (100), which have no flexibility per se, are embedded in a flexible matrix (40).

192. The illuminating device (1000) according to the preceding claim, comprising two flexible supports (42, 43) between which the rigid lighting devices (100) and the material of the flexible matrix (40) are arranged.

193. The illuminating device (1000) according to the previous claim, wherein one of the carriers (43) is translucent and the other carrier (42) is formed of an opaque material, in particular a metal foil.

194. The illuminating device (1000) according to claim 191, wherein the light transmissive material of the flexible matrix (40) comprises particles of at least one of the following materials: luminescence conversion material, color filter material, diffuser material.

195. The illuminating device (1000) according to claim 191, wherein the material of the flexible matrix (40) comprises or consists of at least one of the following materials: zeonex, polystyrene, polycarbonate or other plastics which can preferably be processed by injection molding.

FIG 1

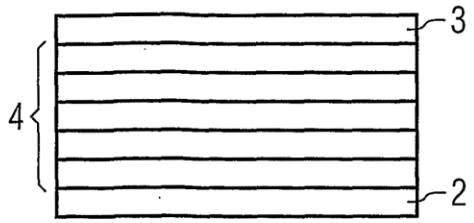

FIG 2A

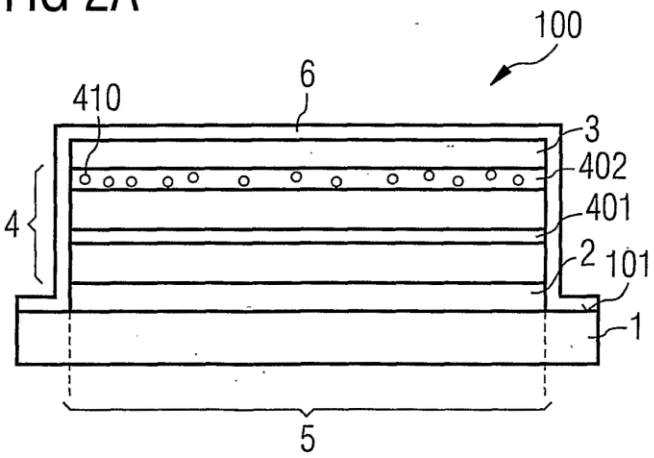

FIG 2B

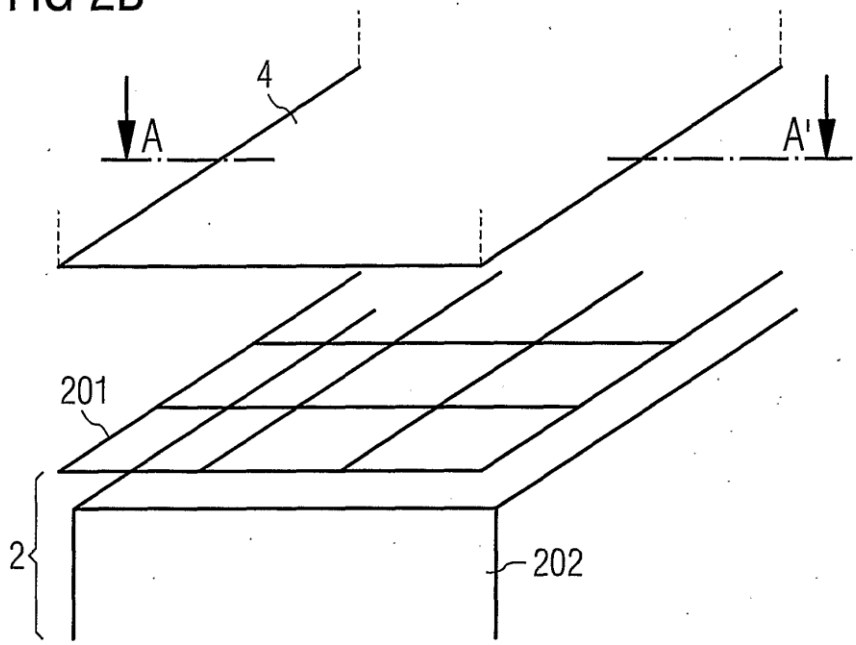

FIG 2C

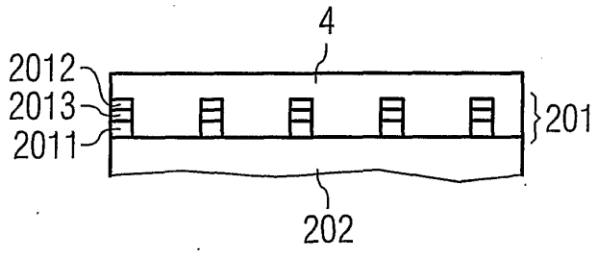

FIG 3

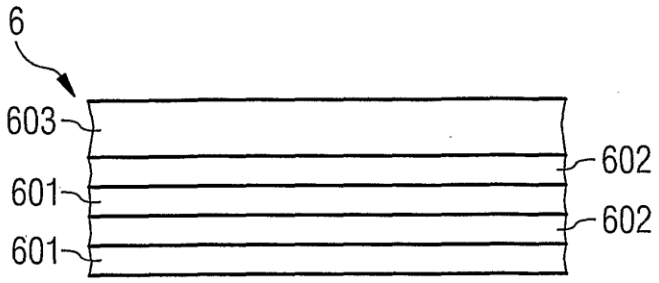
6
603
601
601
602
602

FIG 4A

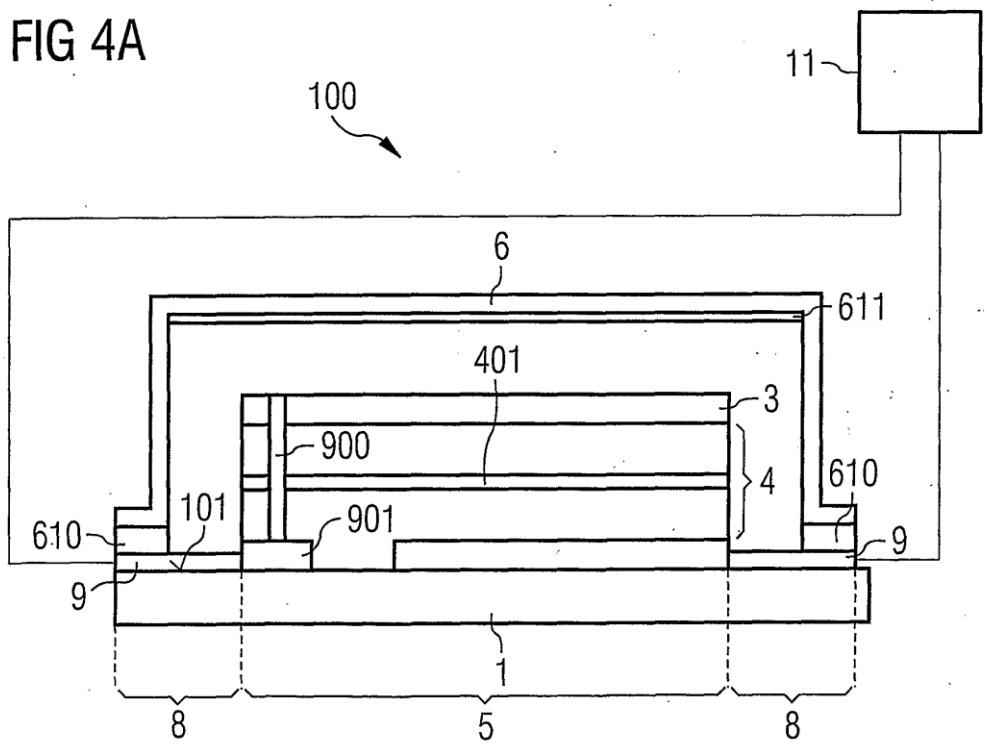
11
100
6
611
401
3
900
4
610
101
901
610
9
9
1
8
5
8

FIG 4B

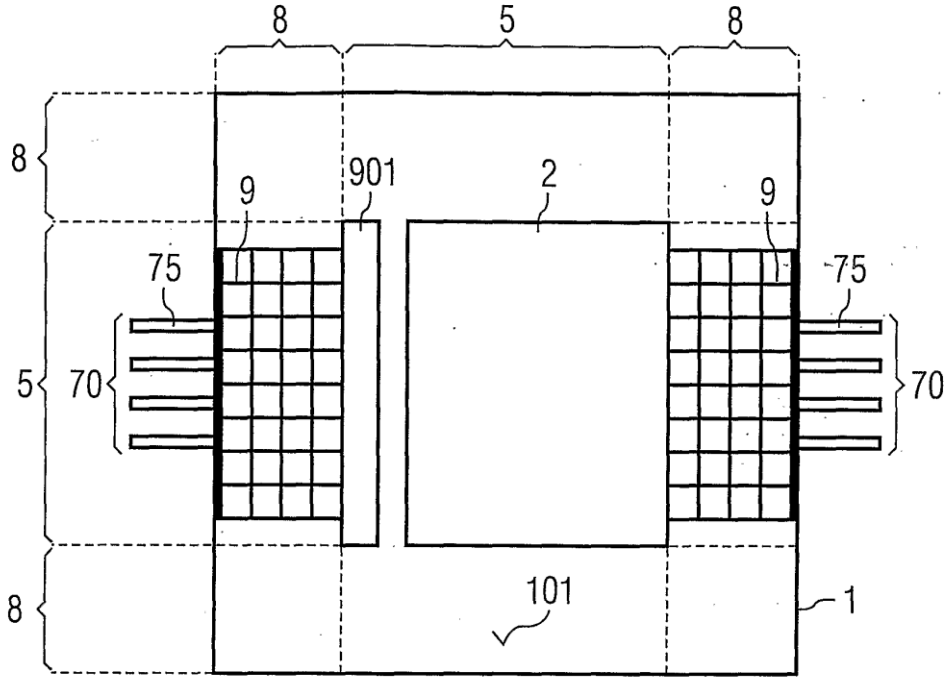

FIG 4C

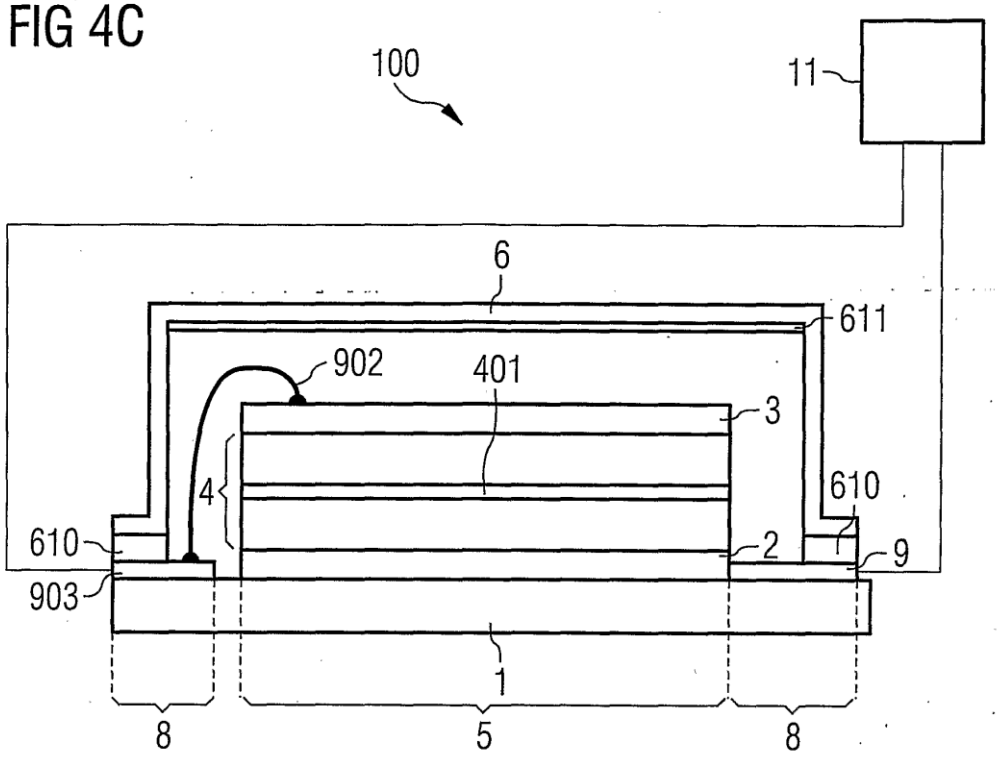

FIG 4D

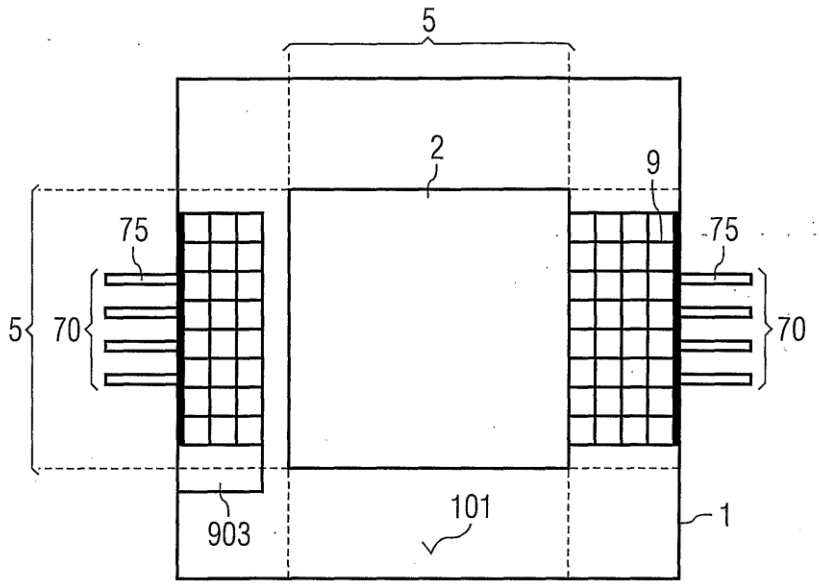

FIG 5A

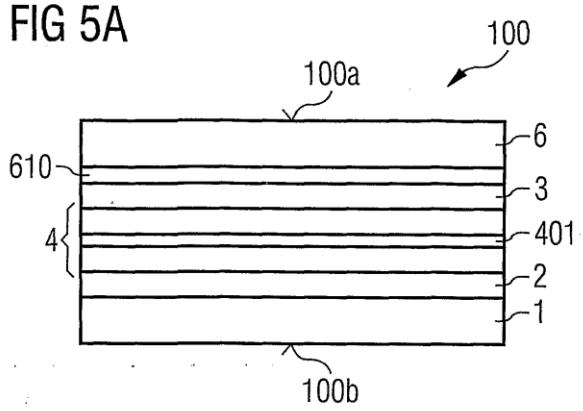

FIG 5B

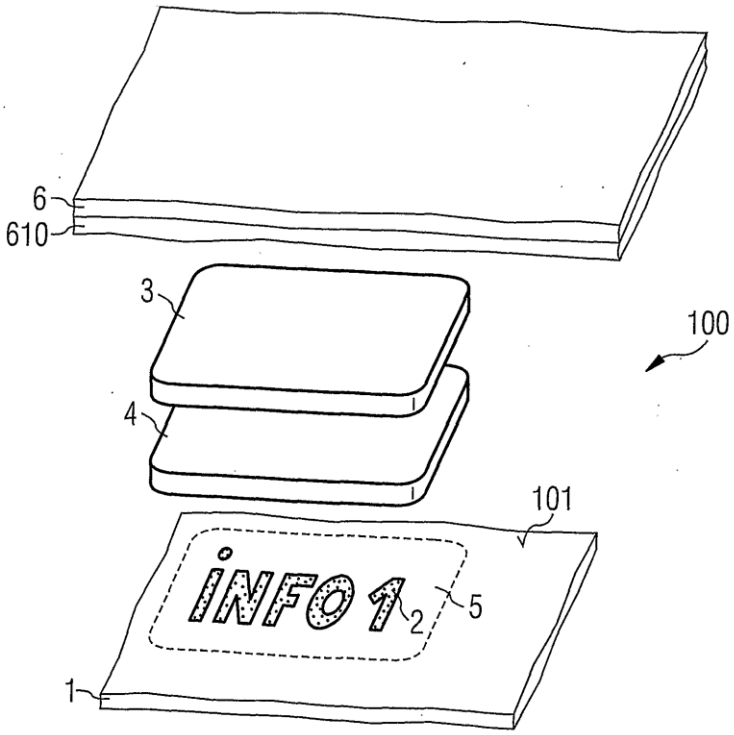

FIG 6

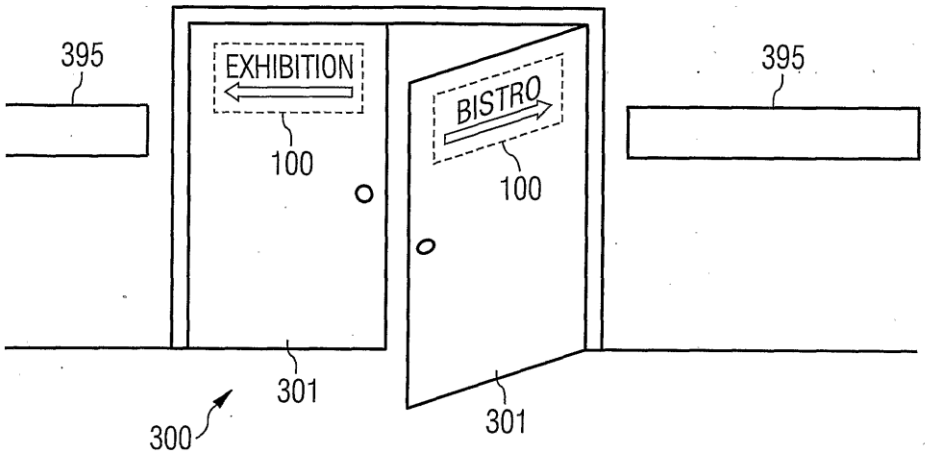

FIG 7

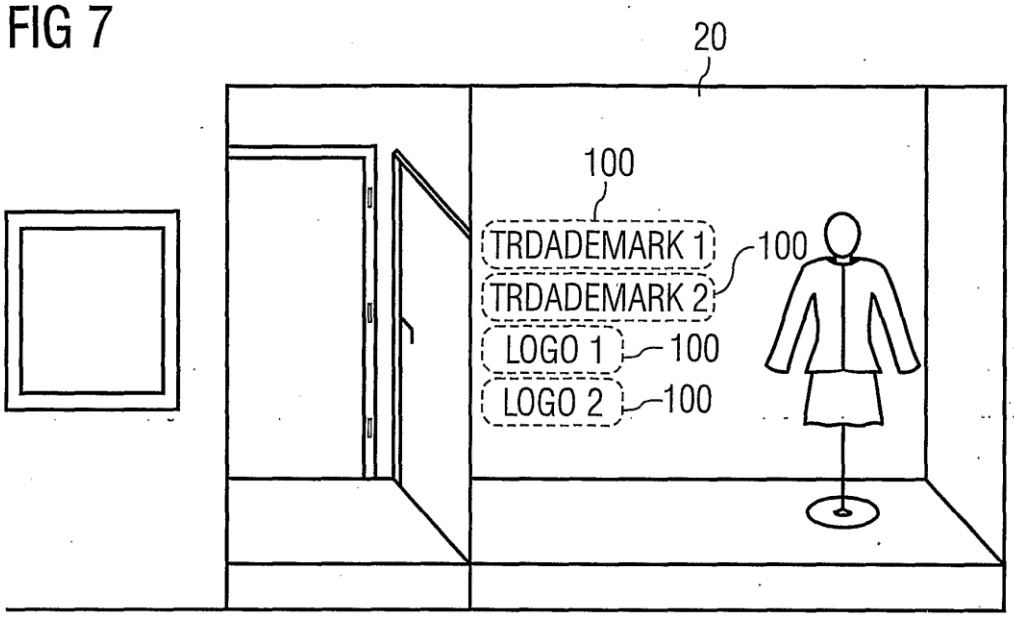
20
100
TRDADEMARK 1
100
TRDADEMARK 2
LOGO 1
100
LOGO 2
100

FIG 8

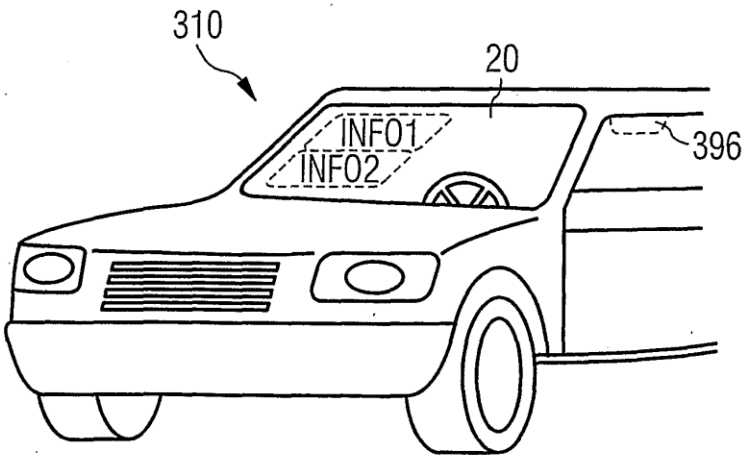
310
20
INFO1
INFO2
396

FIG 9

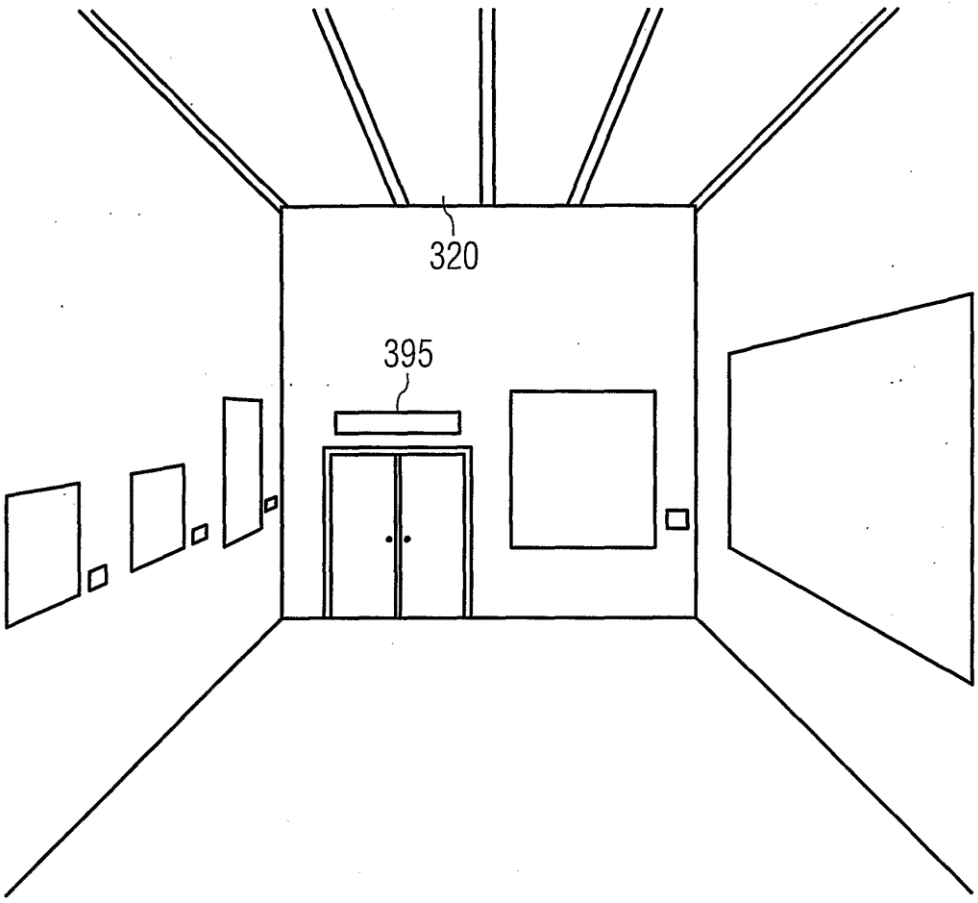

FIG 10

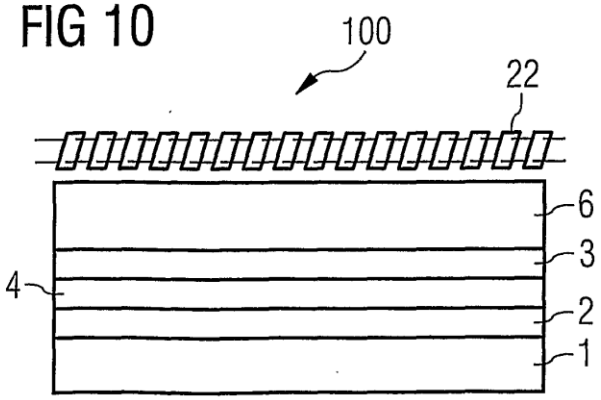

FIG 11

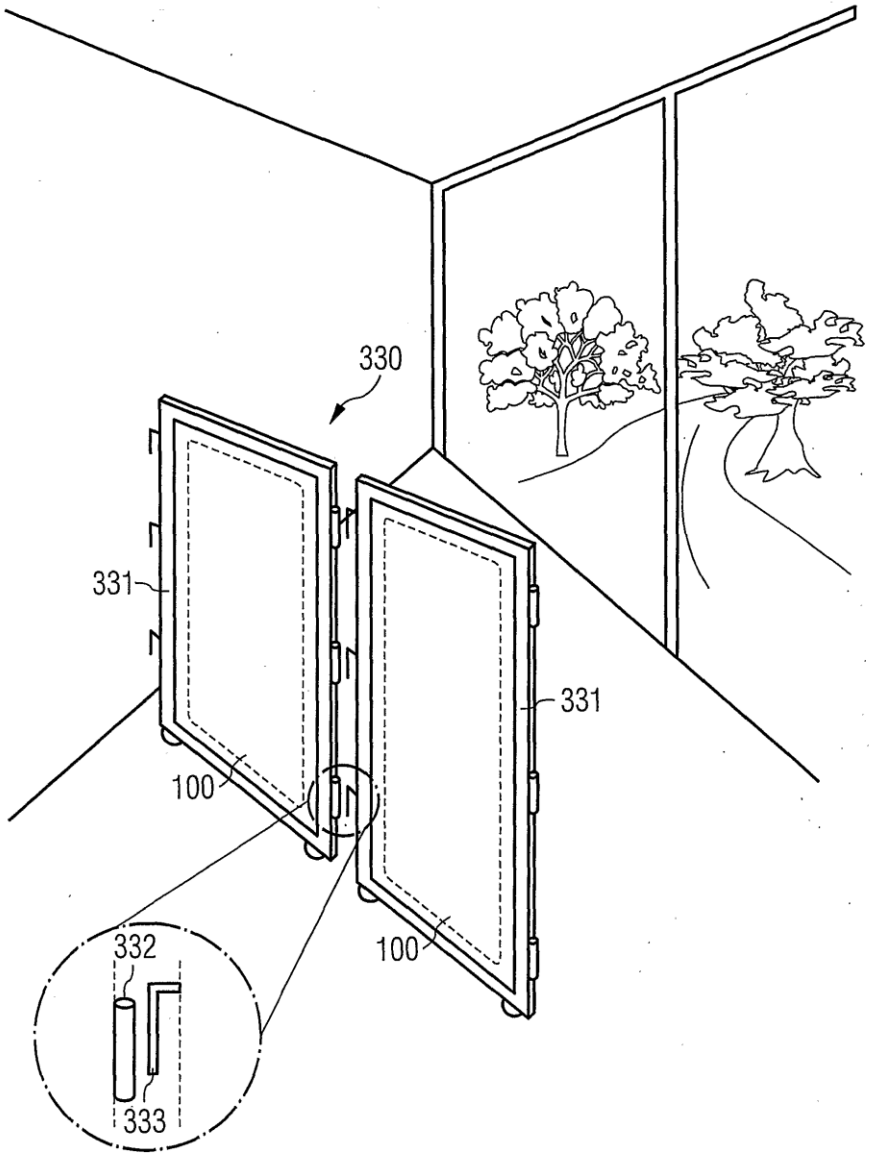

FIG 12A

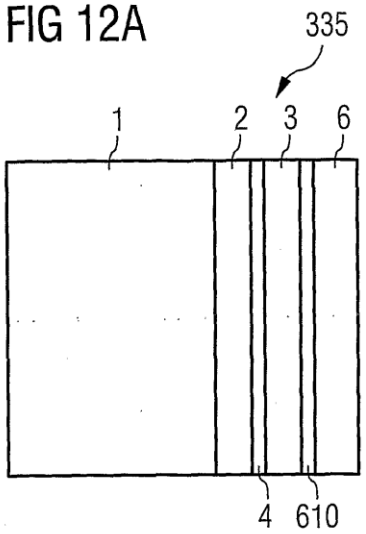

FIG 12B

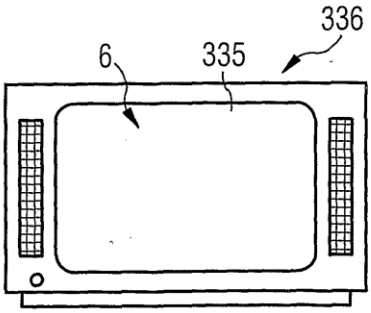

FIG 13A

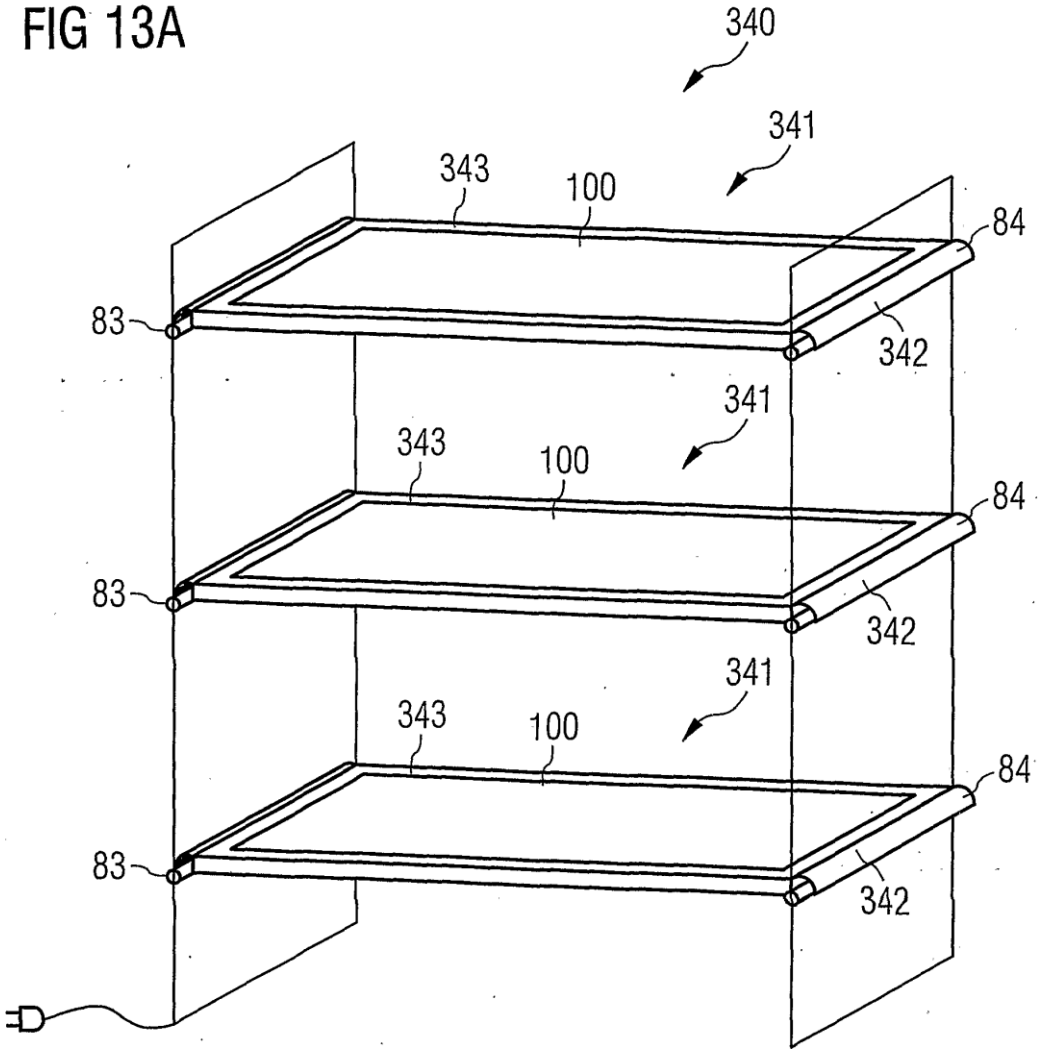
340
341
343
100
84
83
342
341
343
100
84
83
342
341
343
100
84
83
342

FIG 13B

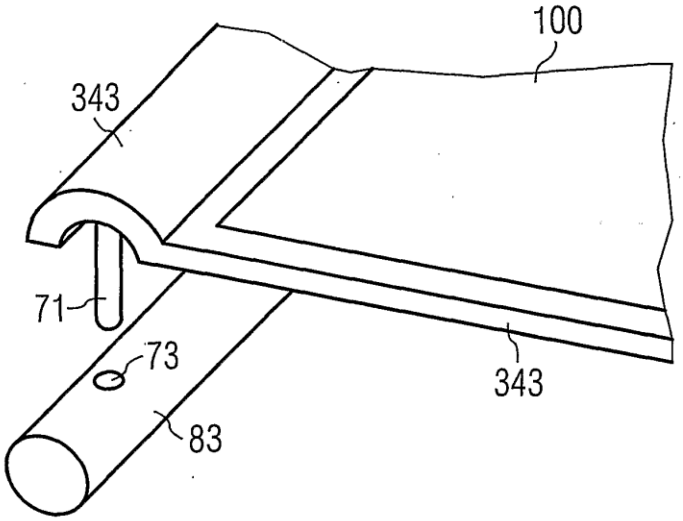

FIG 14

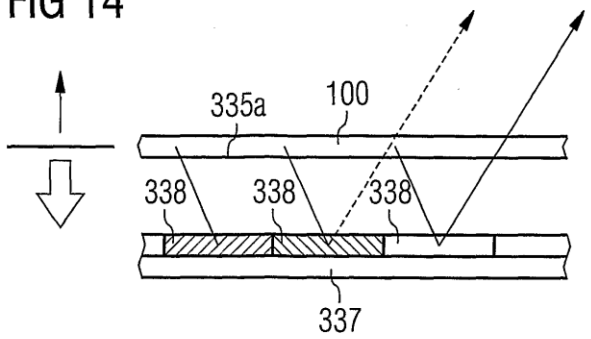

FIG 15

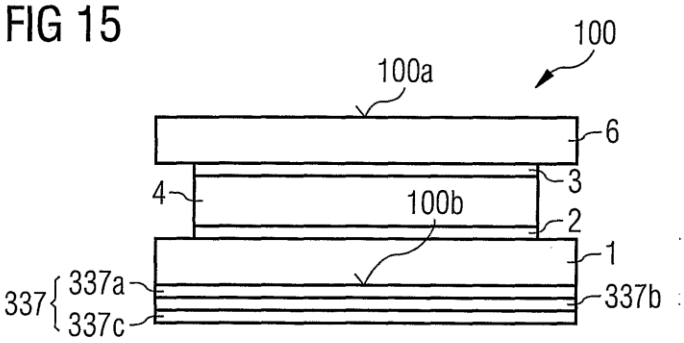

FIG 16

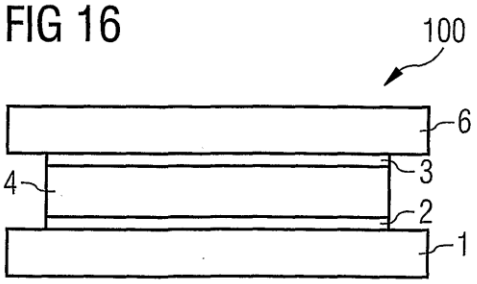

FIG 17A

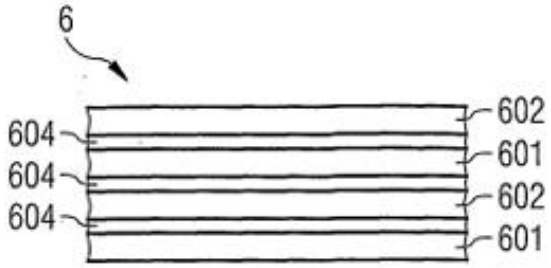

FIG 17B

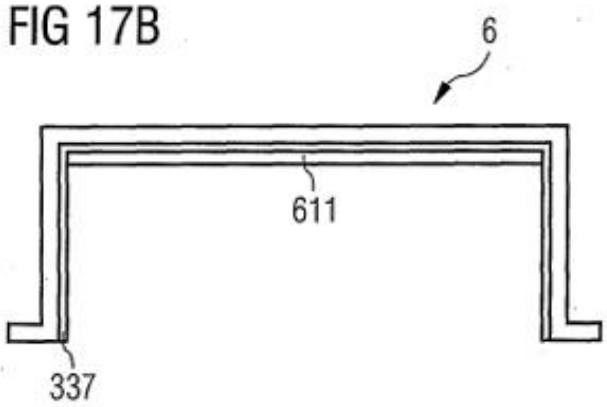

FIG 17C

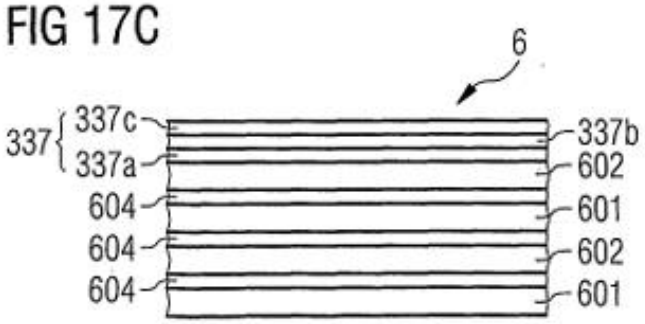

FIG 18A

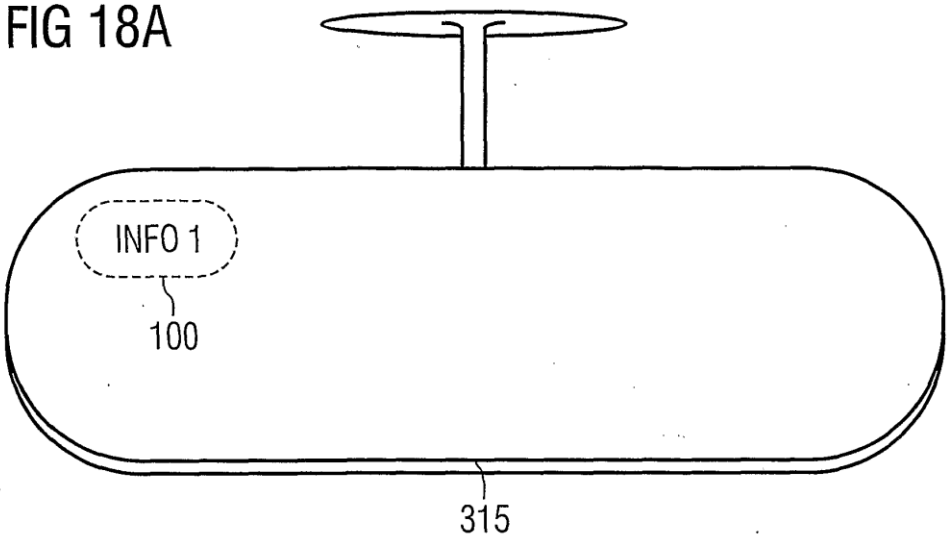

FIG 18B

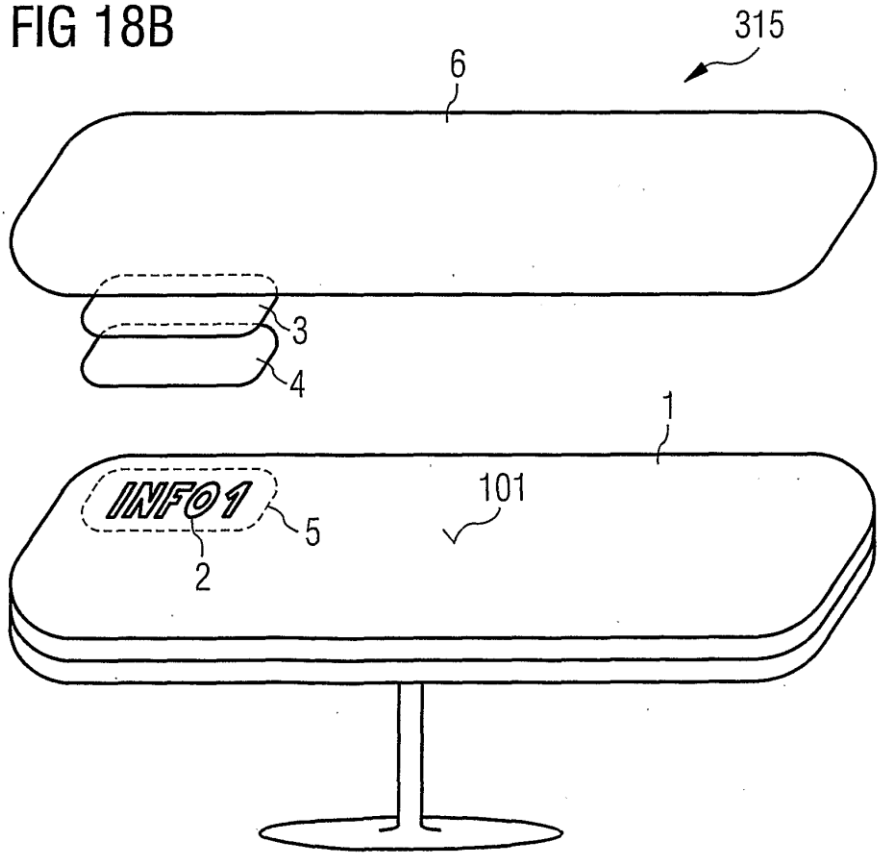

FIG 19

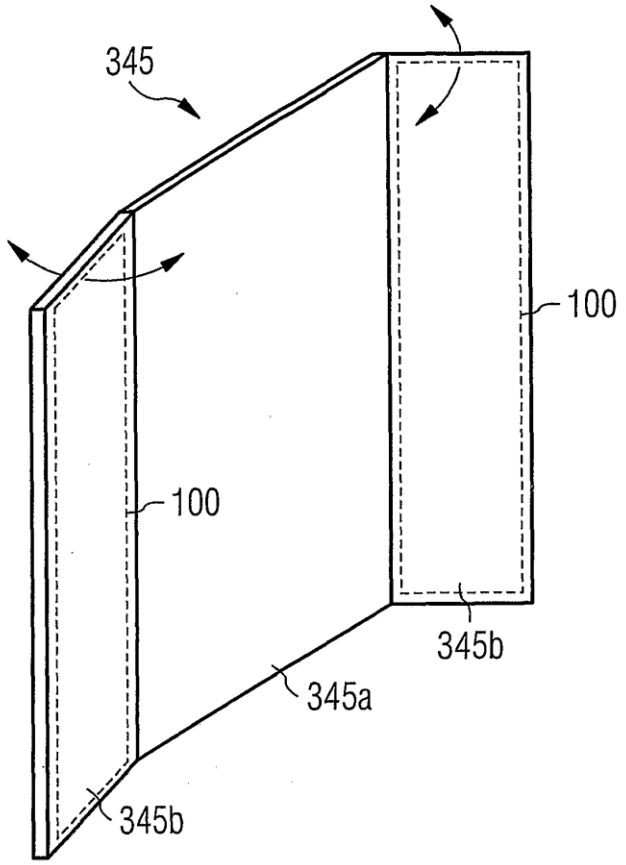

FIG 20

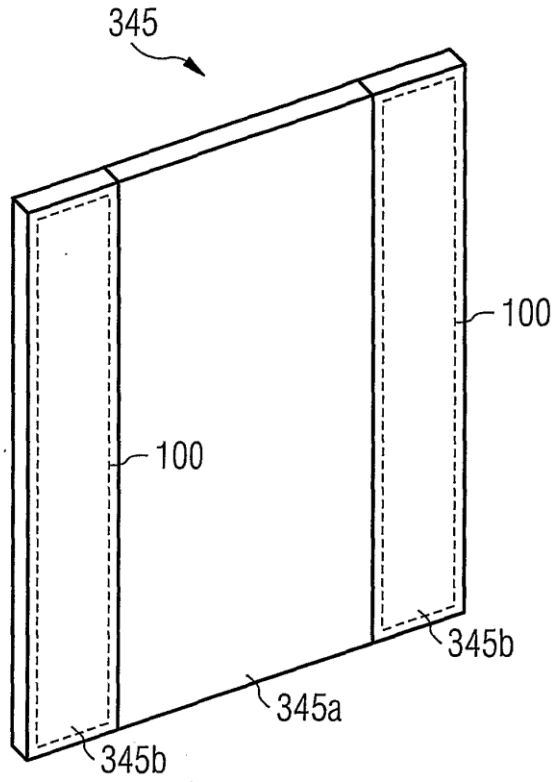

FIG 21

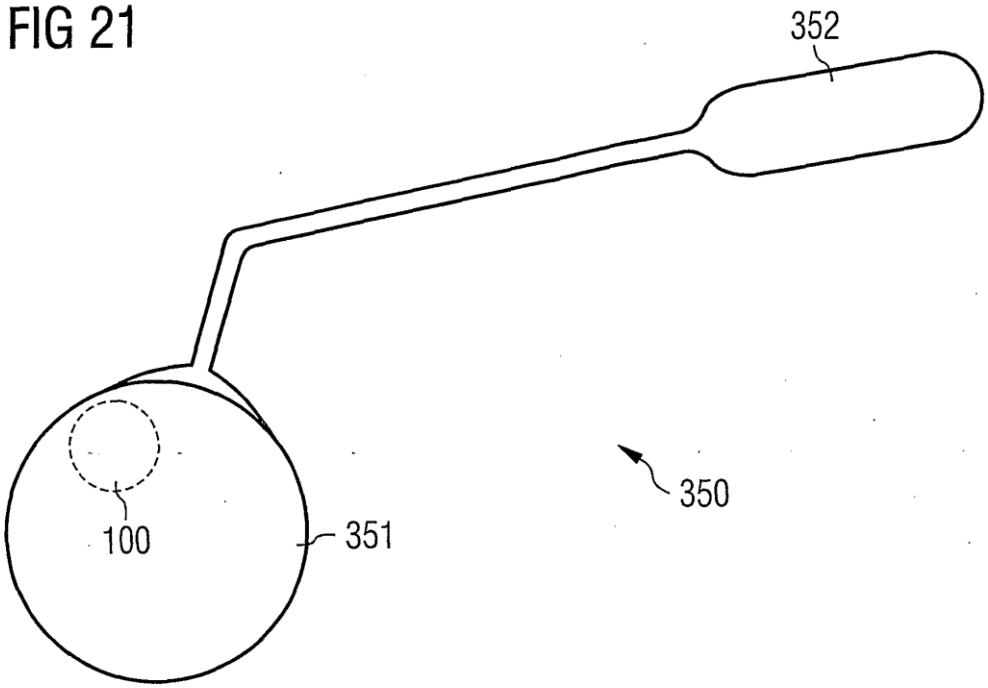

FIG 22

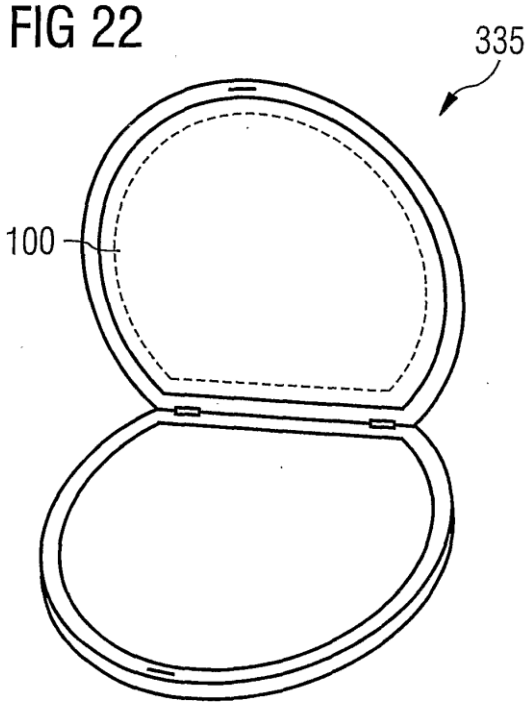

FIG 23

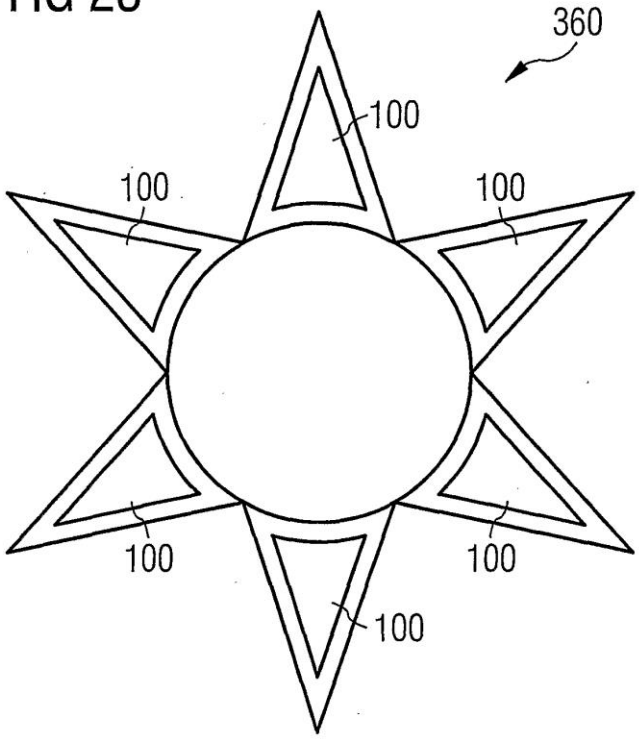

FIG 24

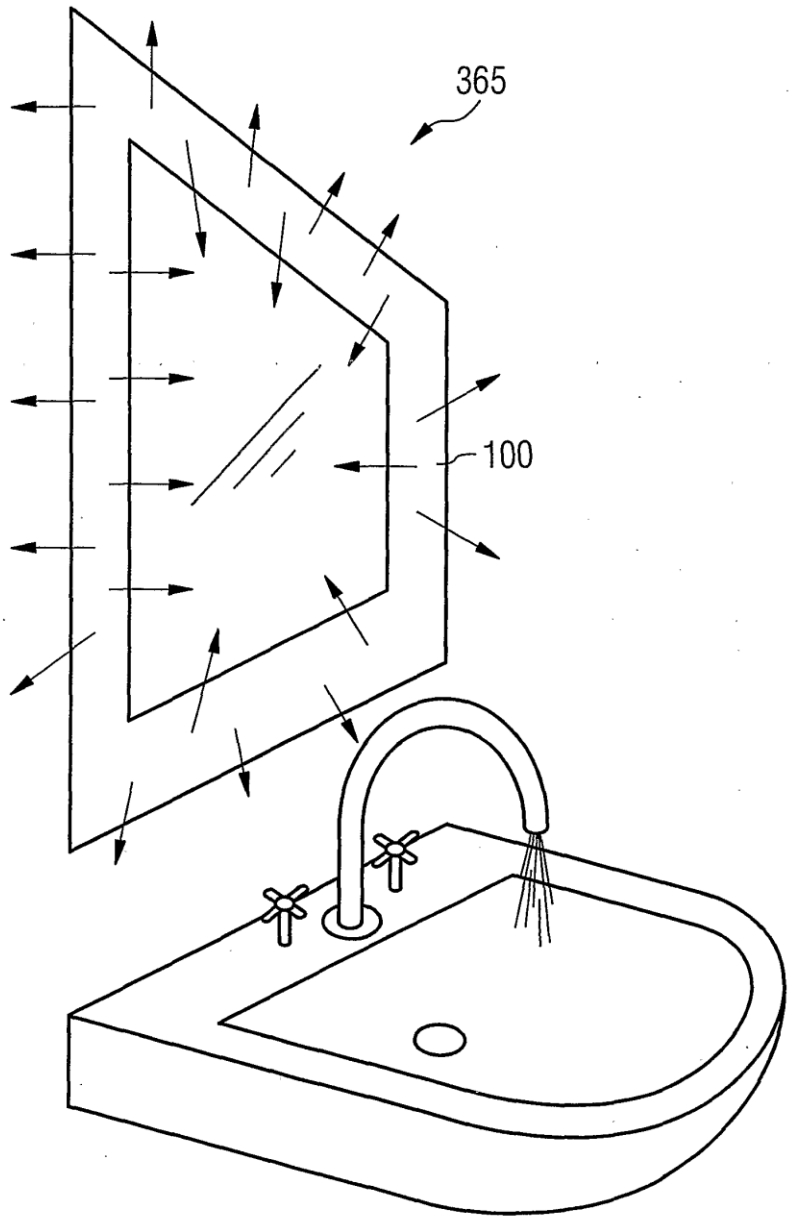

FIG 25

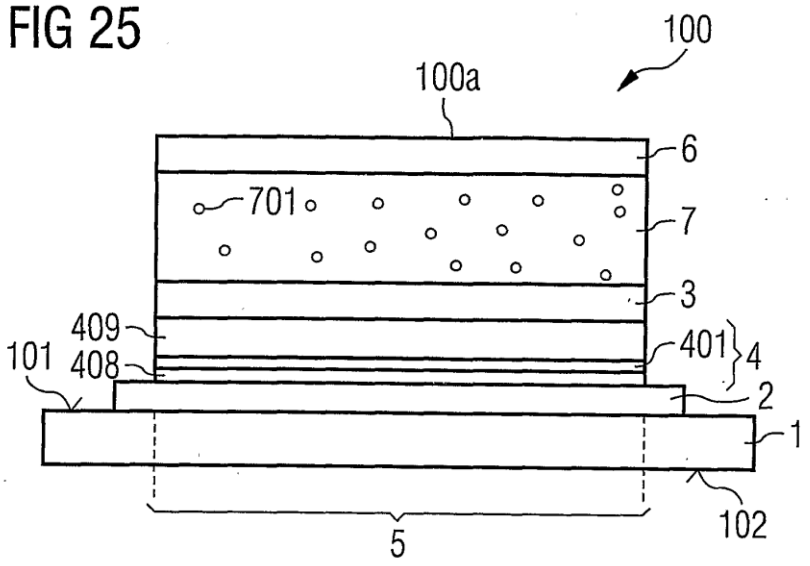
100
100a
6
701
7
3
409
401
4
101
408
2
1
102
5

FIG 26

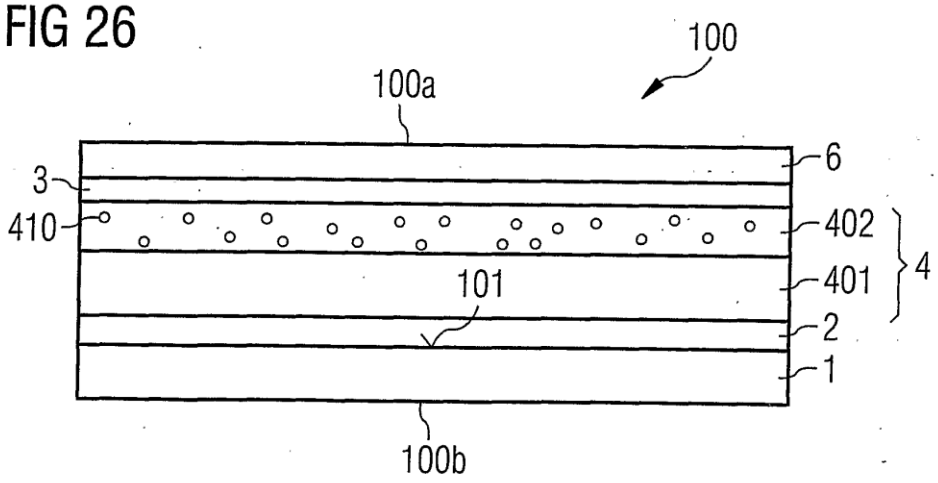
100
100a
6
3
410
402
4
401
101
2
1
100b

FIG 27

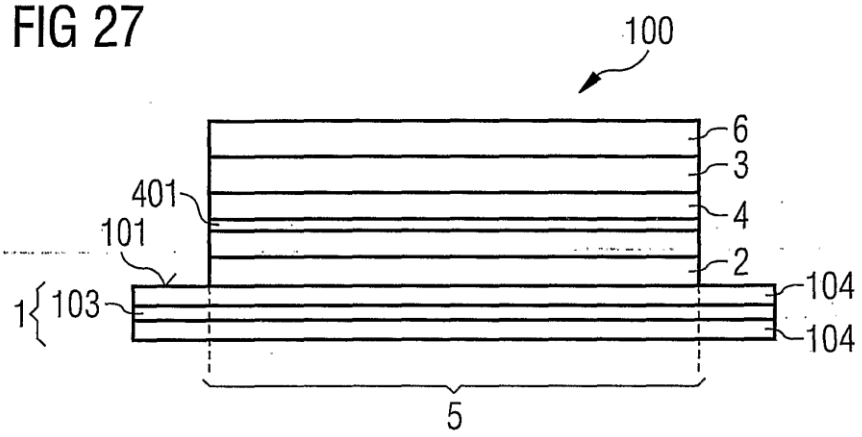

FIG 28A

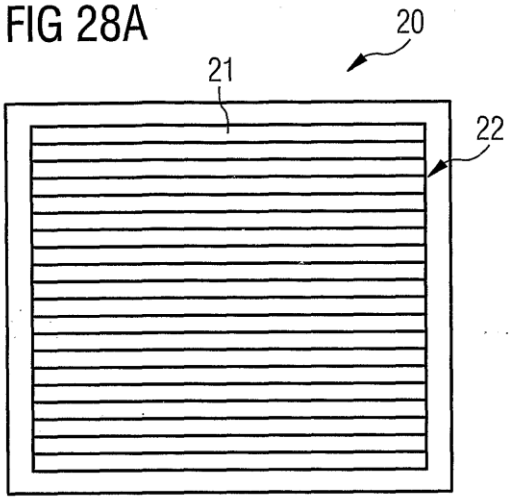

FIG 28B

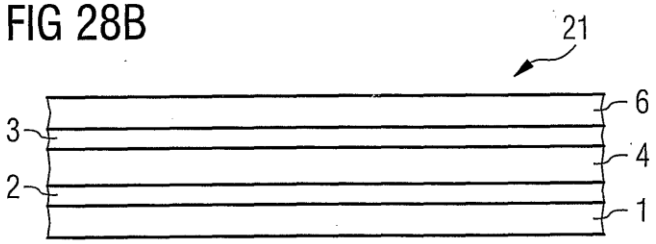

FIG 29A

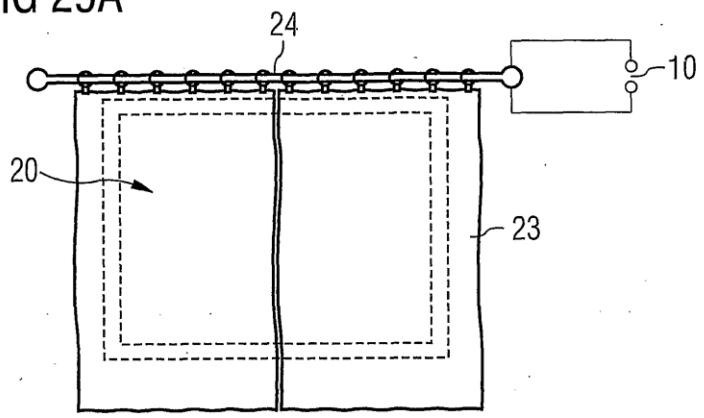

FIG 29B

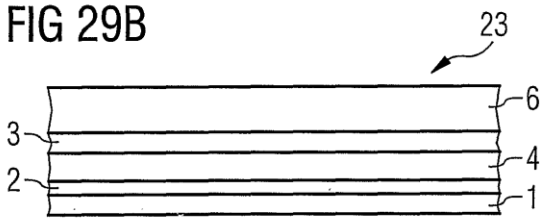

FIG 29C

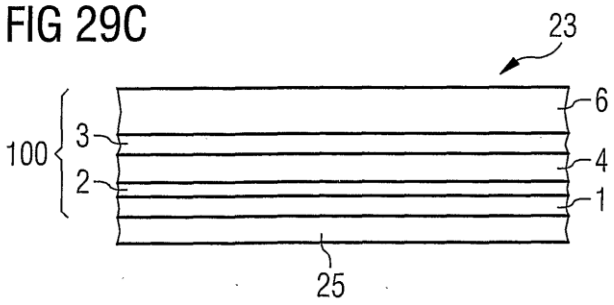

FIG 30

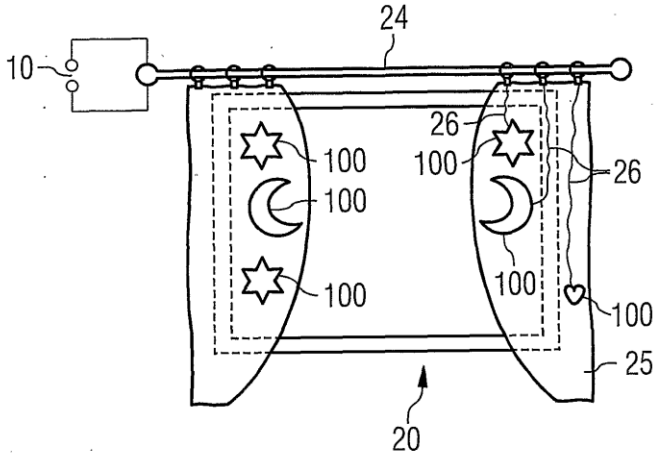

FIG 31

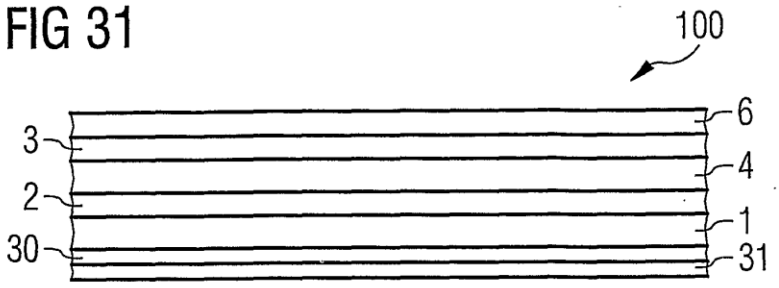

FIG 32

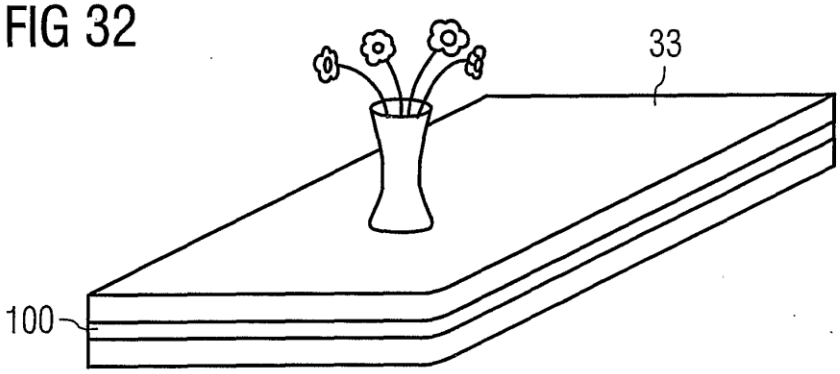

FIG 33

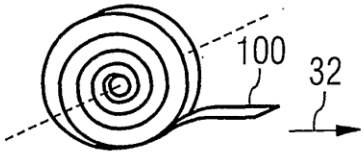

FIG 34A

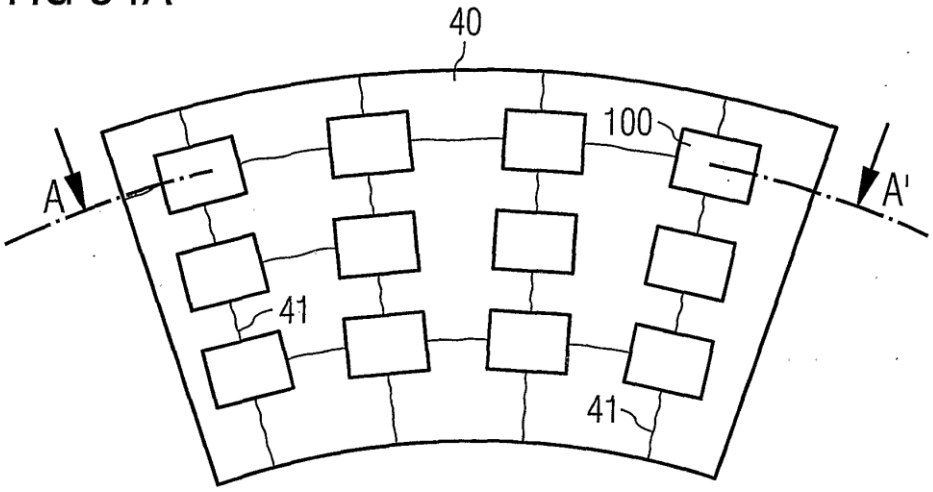

FIG 34B

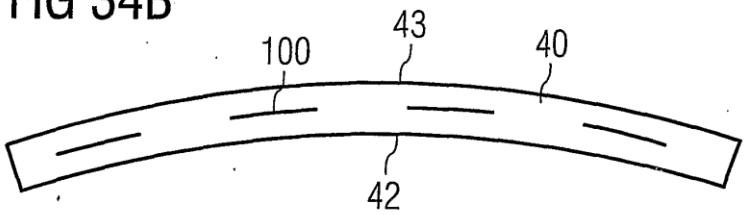

FIG 35A

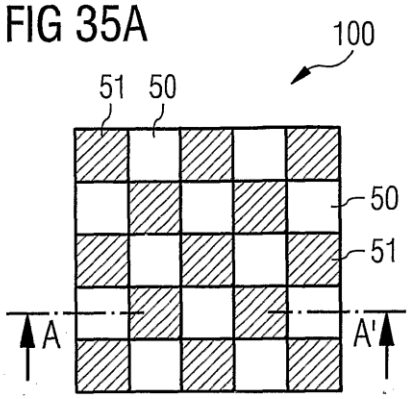

FIG 35B

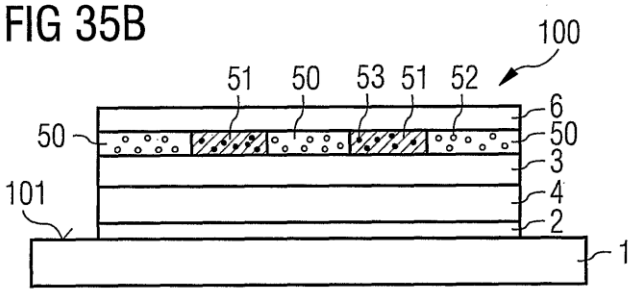

FIG 35C

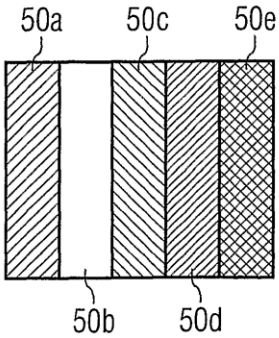

FIG 36

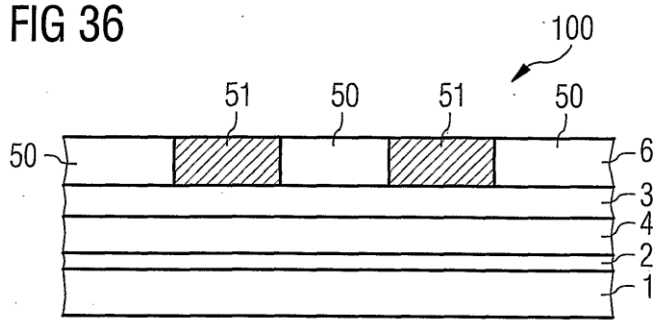

FIG 37

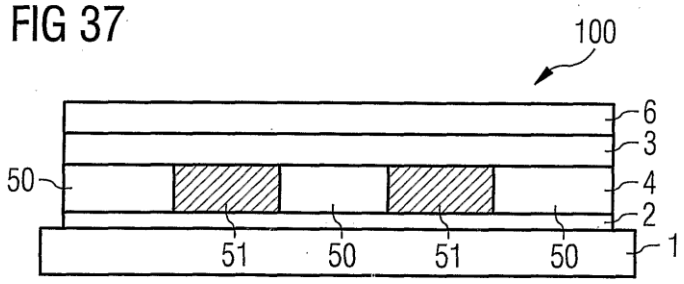

FIG 38

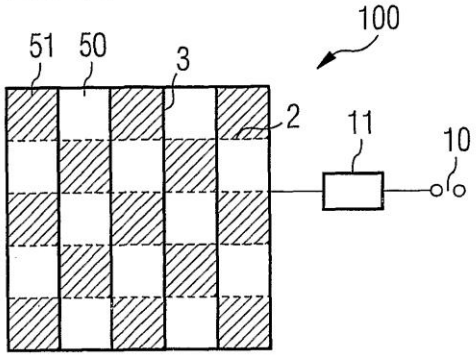

FIG 39

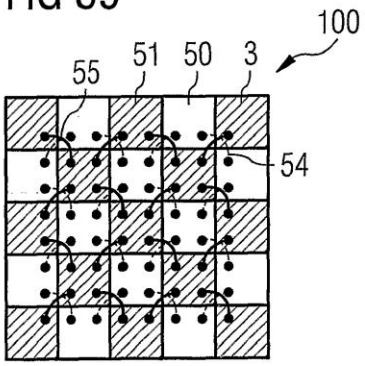

FIG 40A

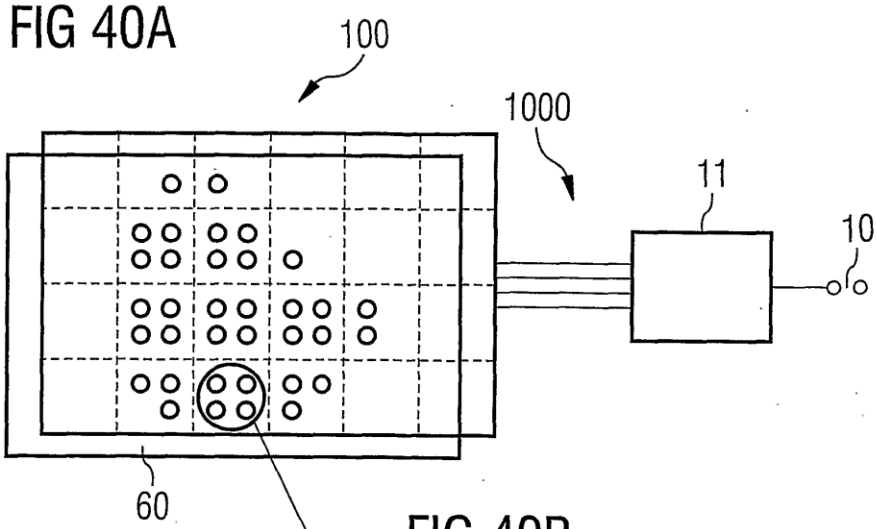

FIG 40B

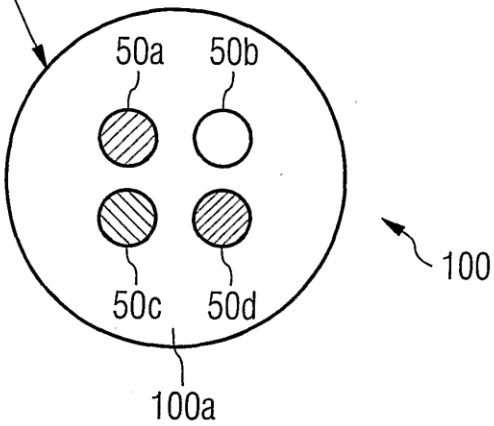

FIG 41

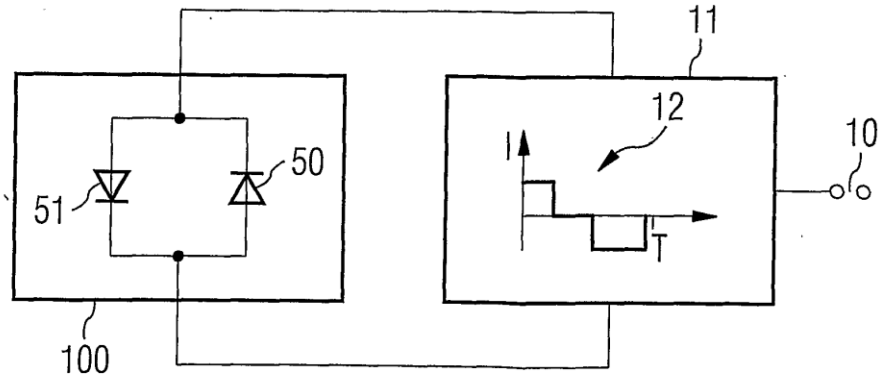

FIG 42

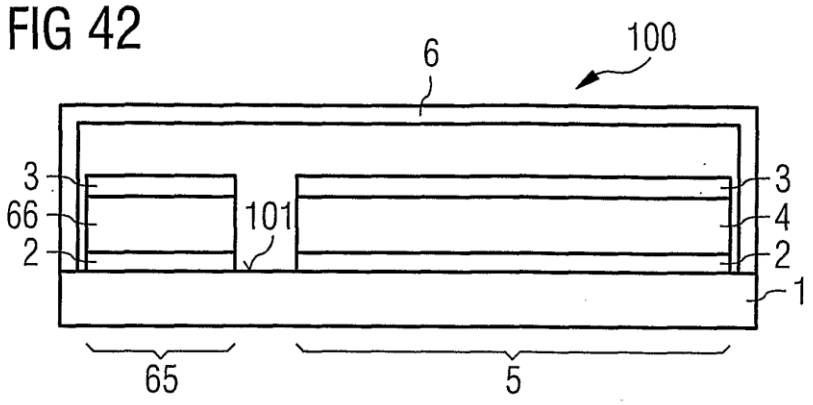

FIG 43

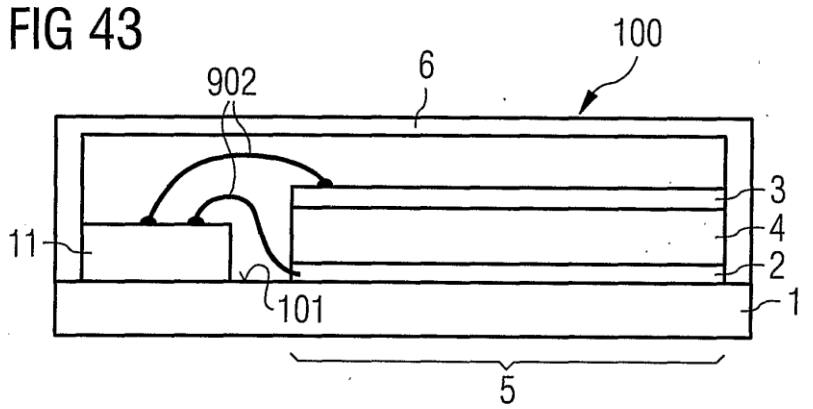

FIG 44

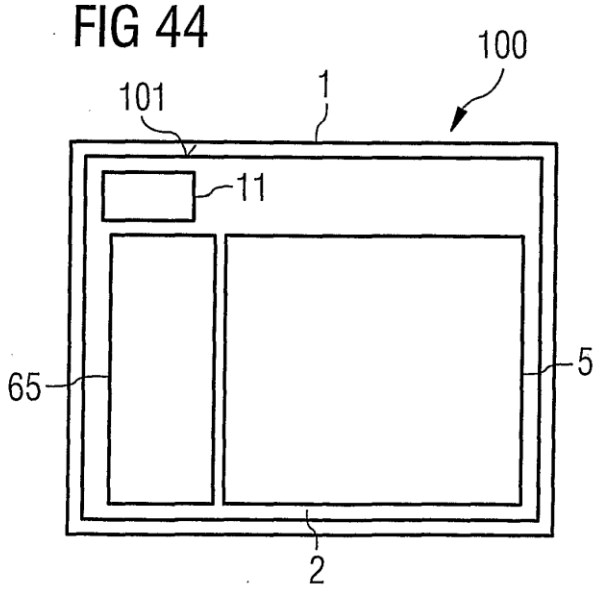

FIG 45

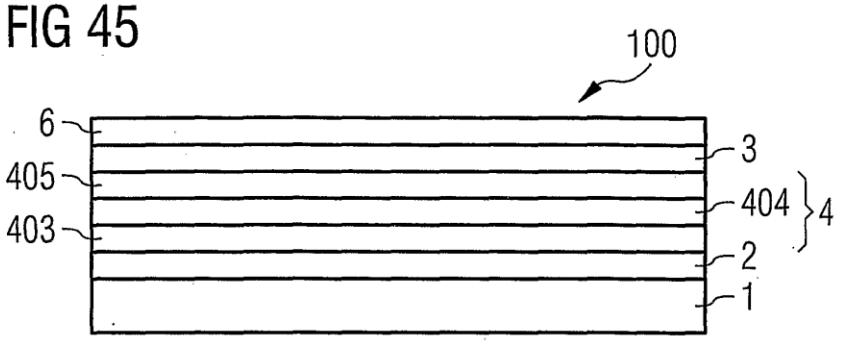

FIG 46

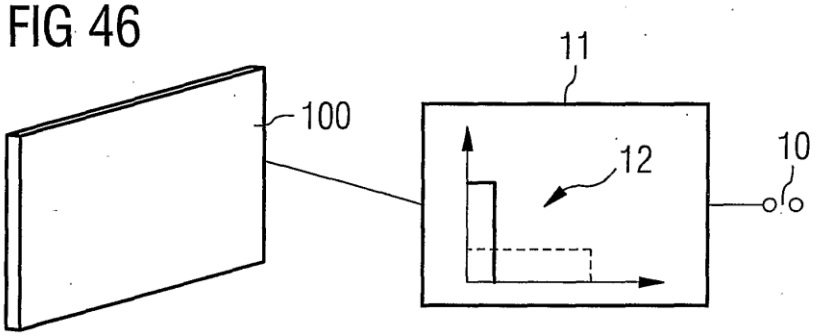

FIG 47

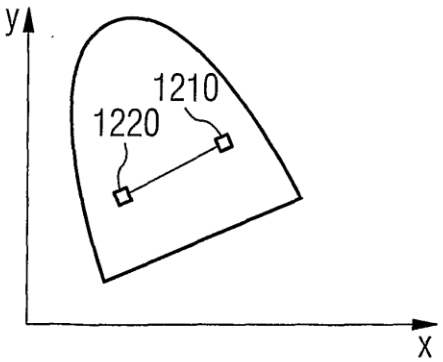

FIG 48A

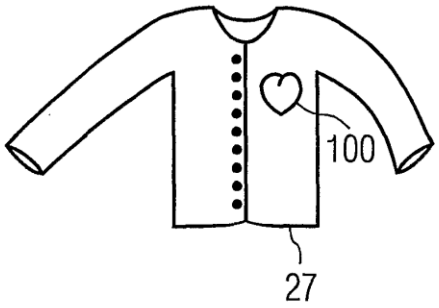

FIG 48B

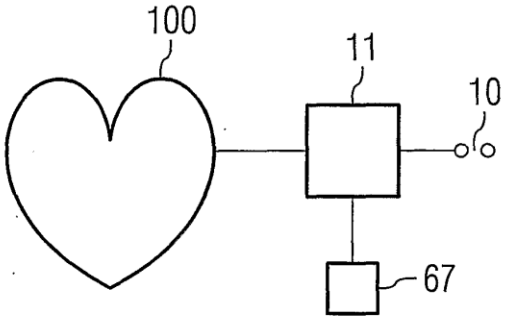

FIG 49

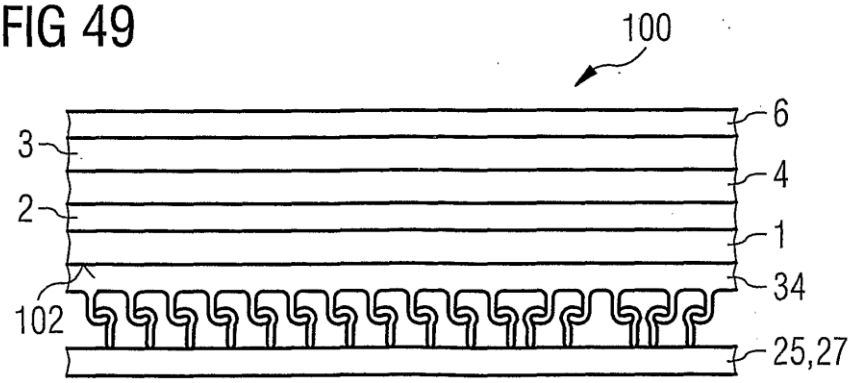

FIG 50

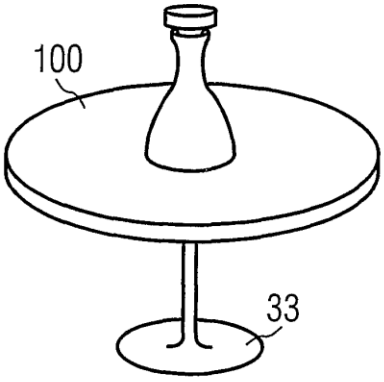

FIG 51

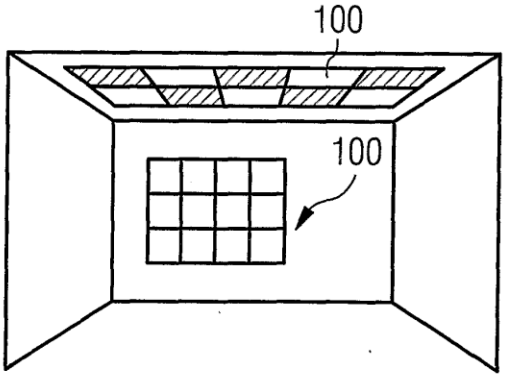

FIG 52

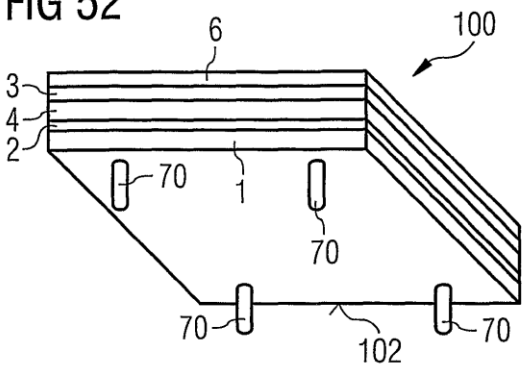

FIG 53

FIG 54

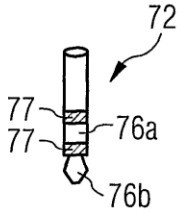

FIG 55

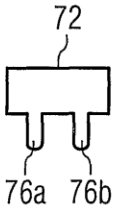

FIG 56

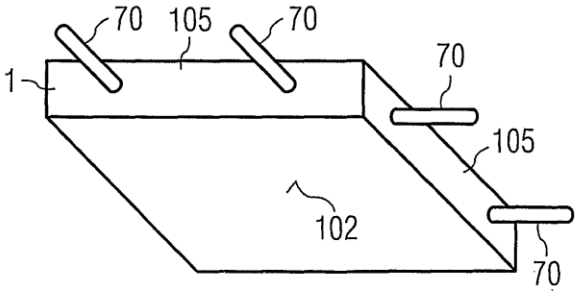

FIG 57

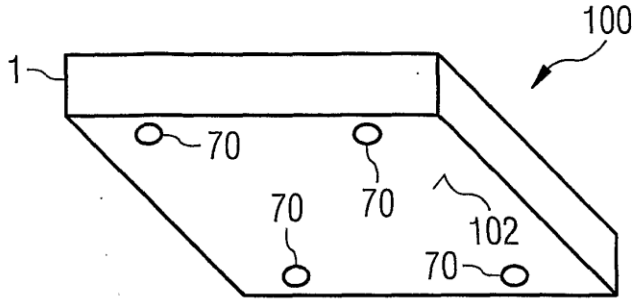

FIG 58

FIG 59

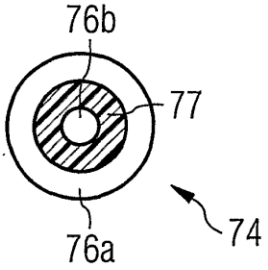

FIG 60

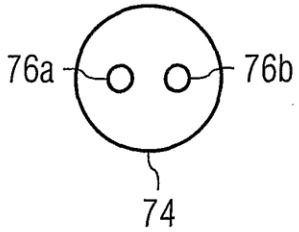

FIG 61

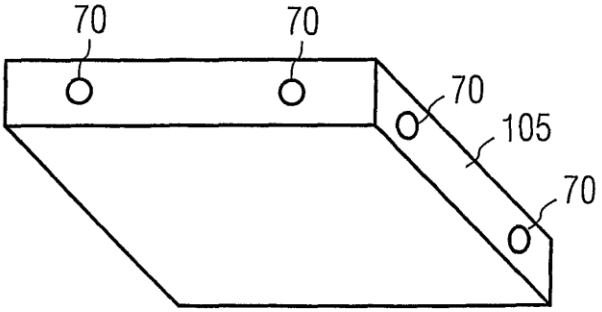

FIG 62A

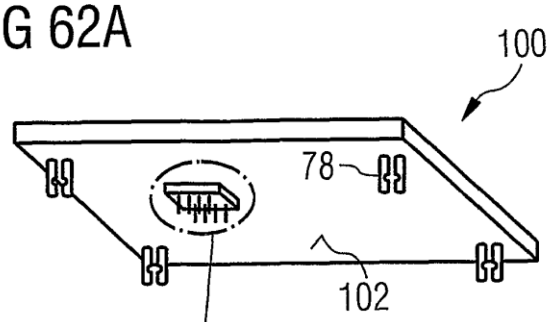

FIG 62B

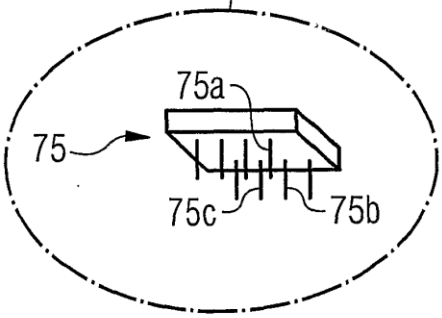

FIG 63A

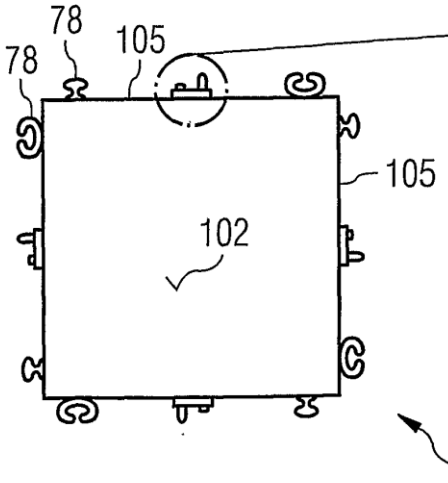

FIG 63B

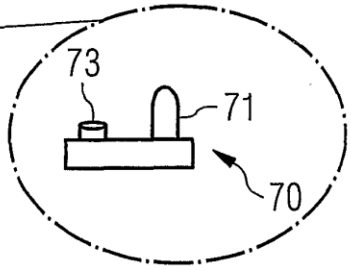

FIG 64

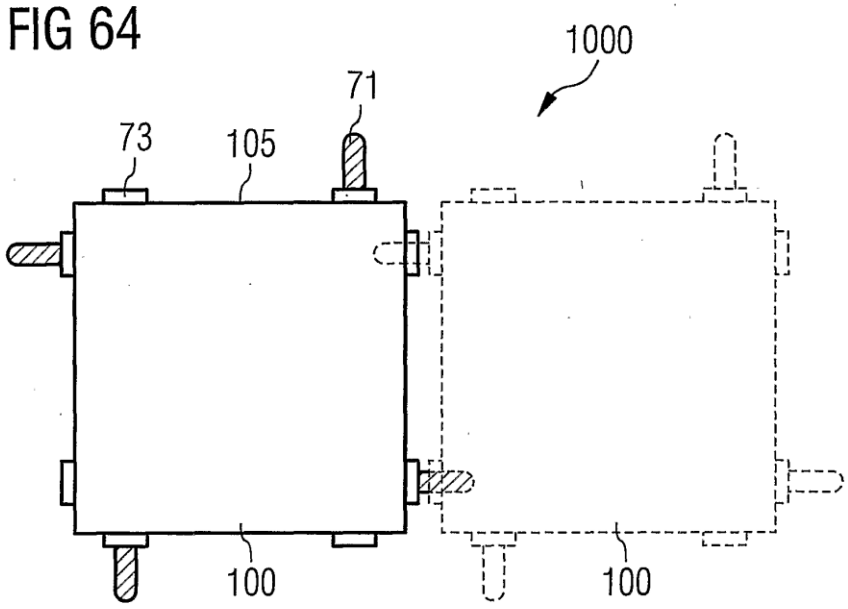

FIG 65

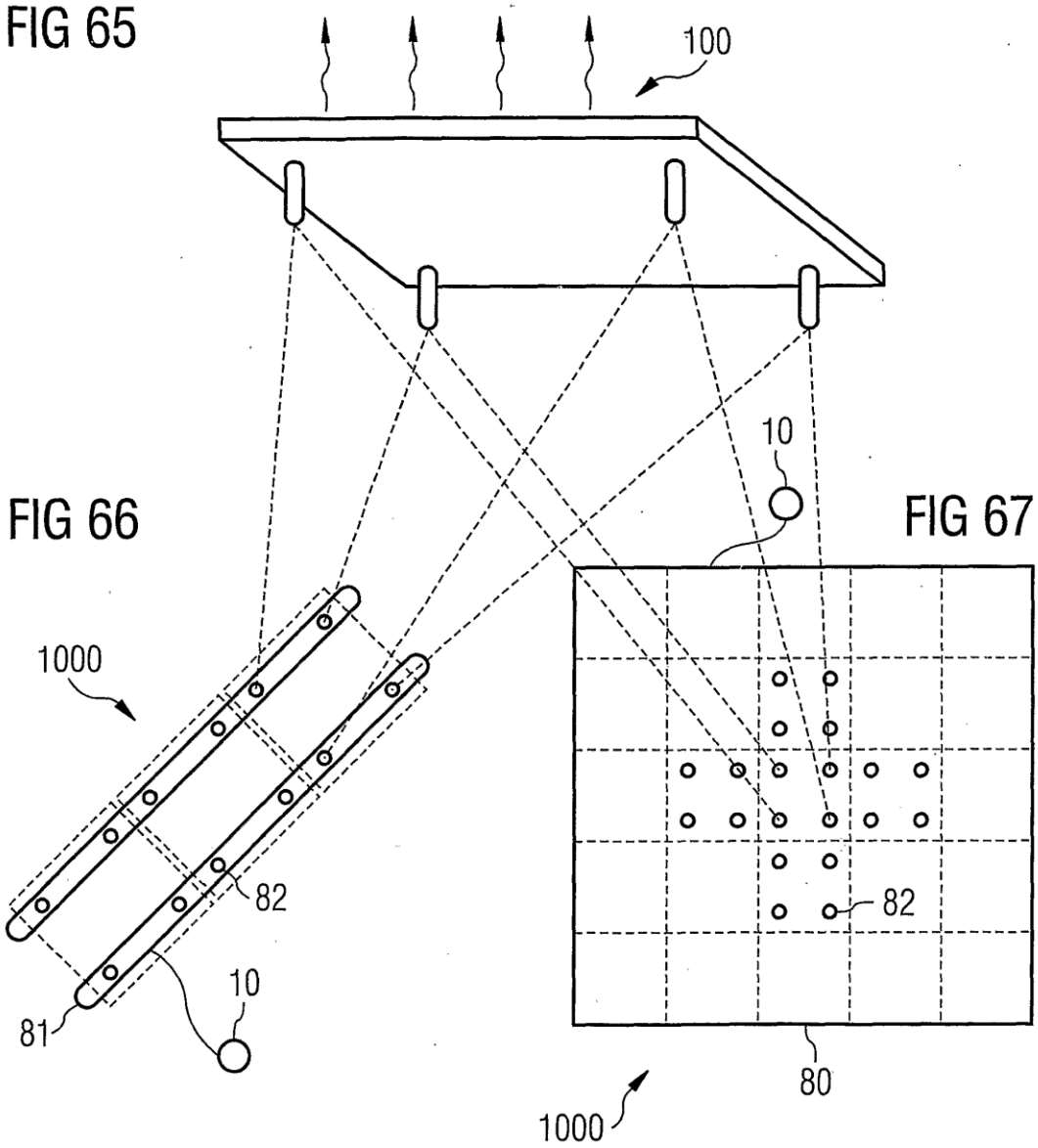

FIG 68

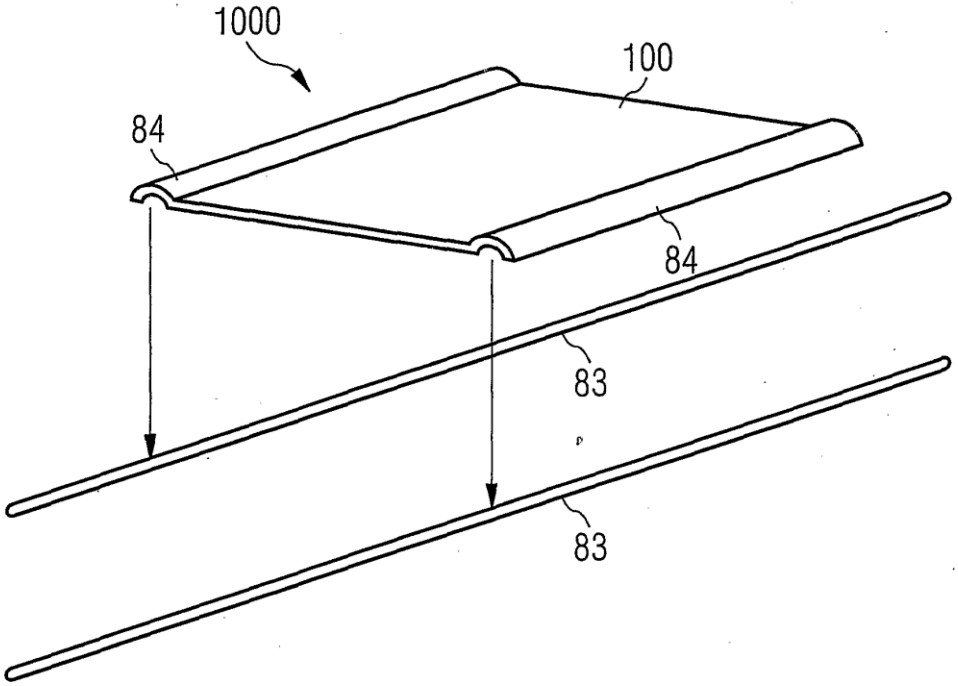

FIG 69

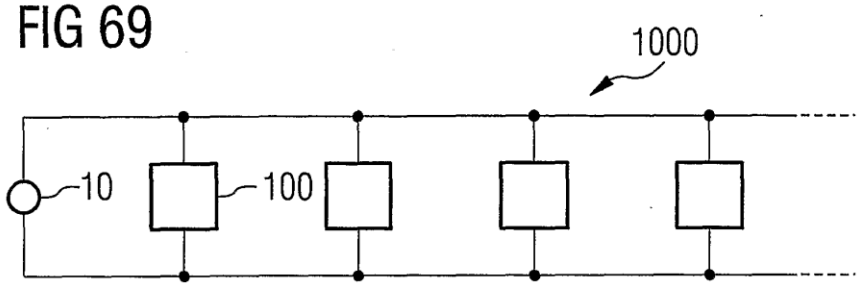

FIG 70

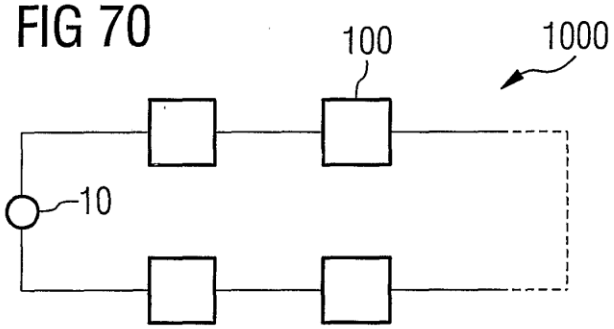

FIG 71

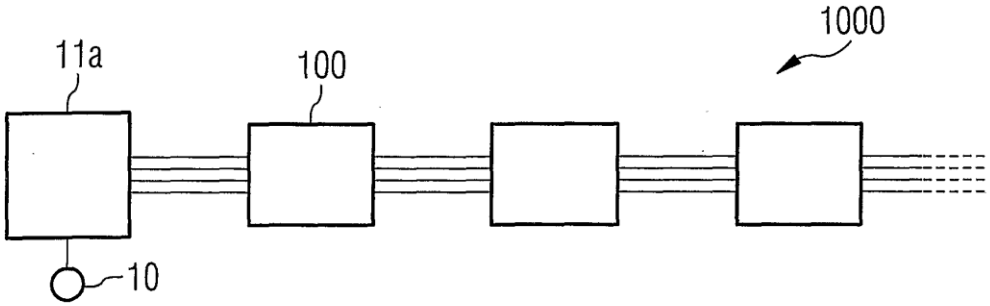

FIG 72

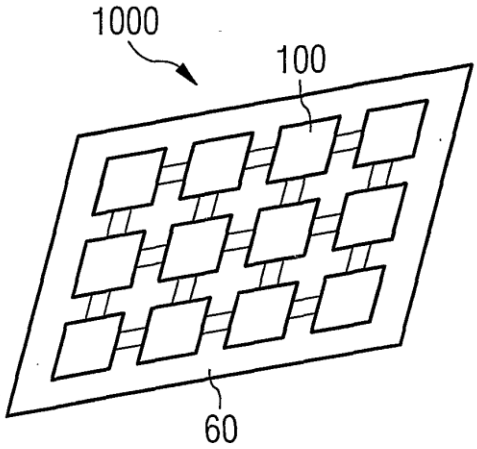

FIG 73

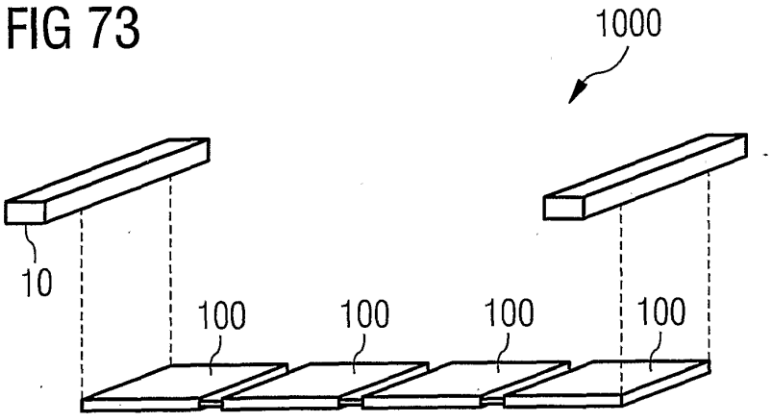

FIG 74

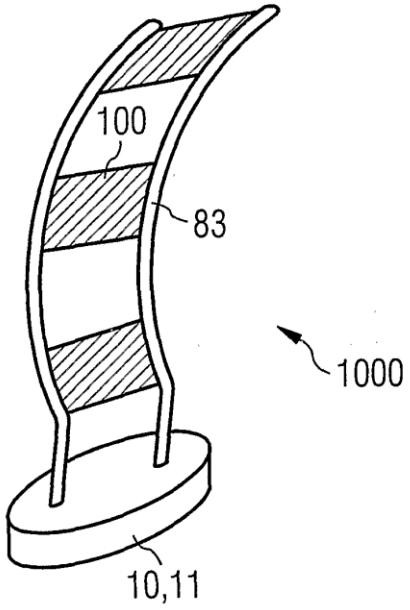

FIG 75

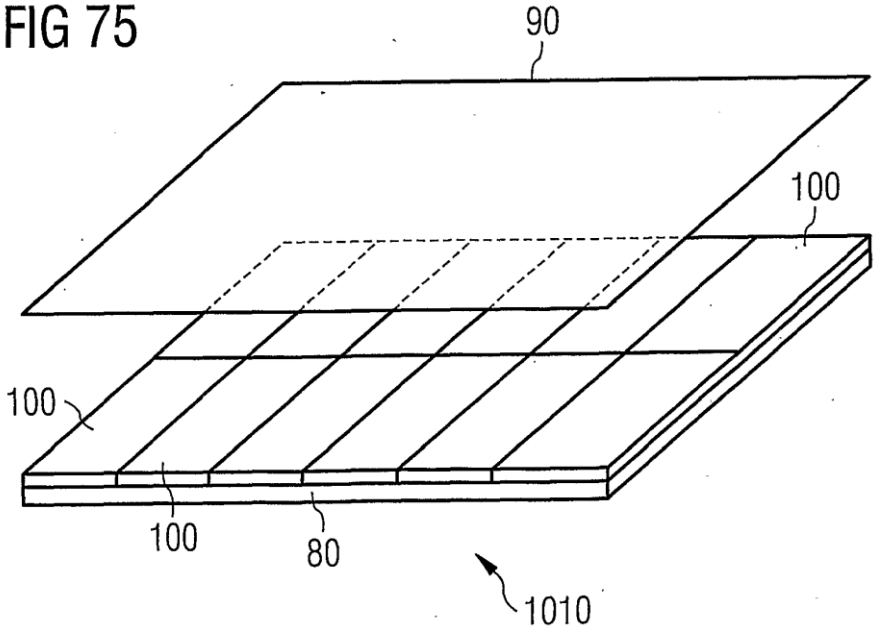

FIG 76

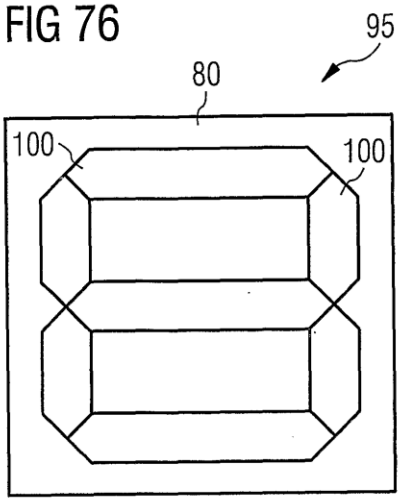

FIG 77

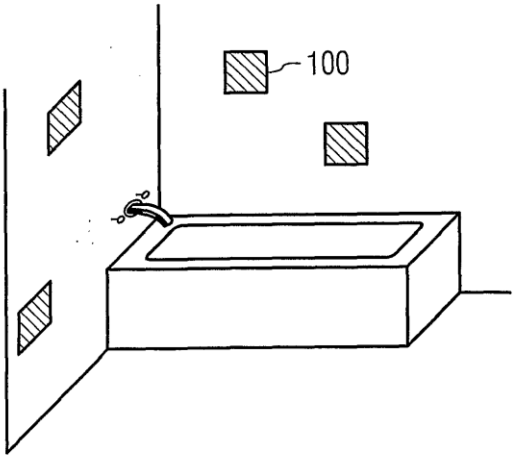

FIG 78

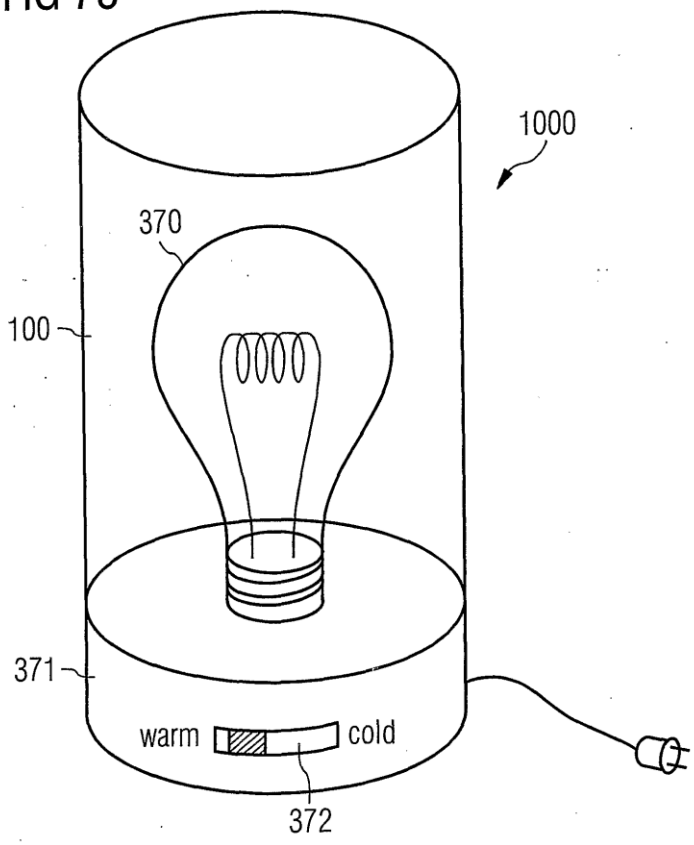

FIG 79

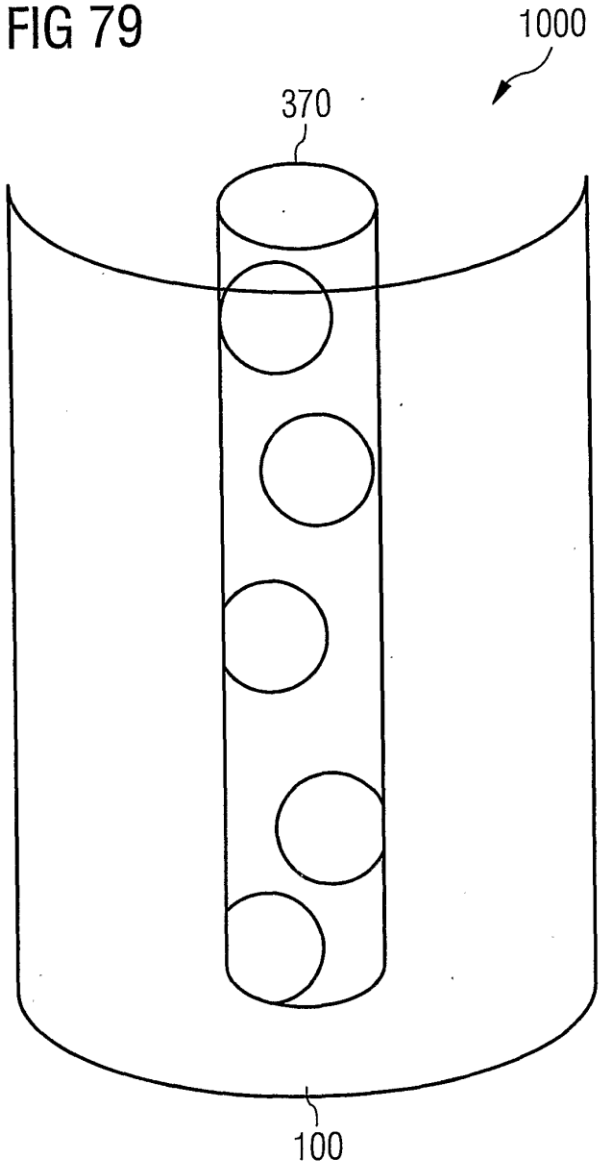

FIG 80A

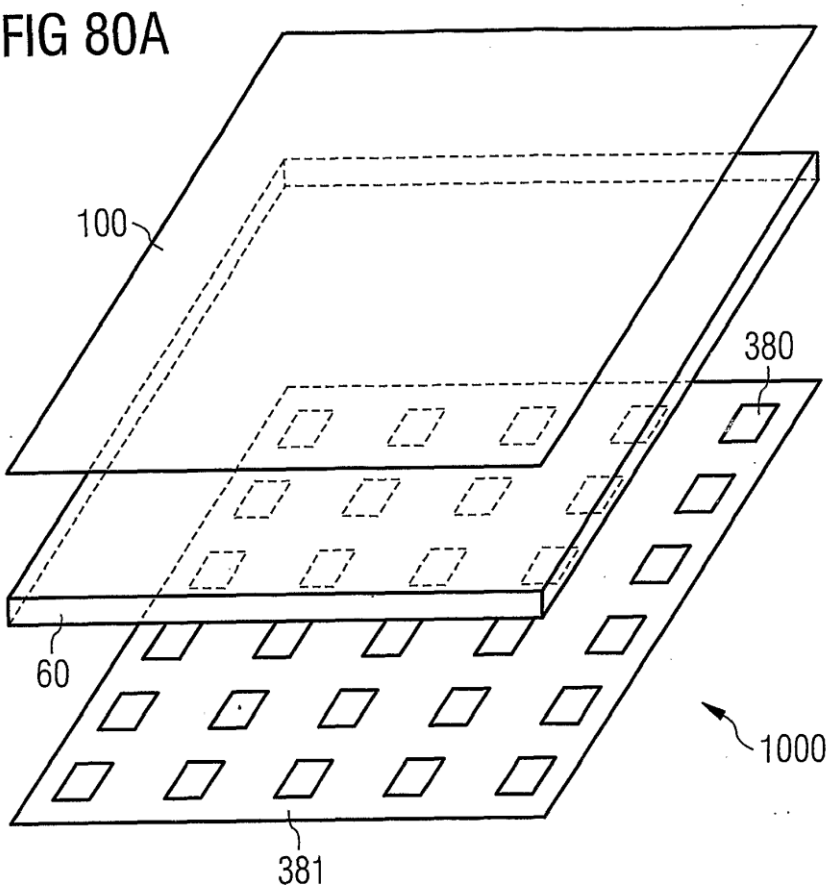

FIG 80B

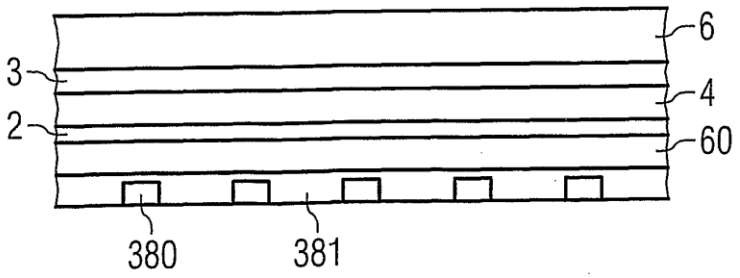

FIG 81

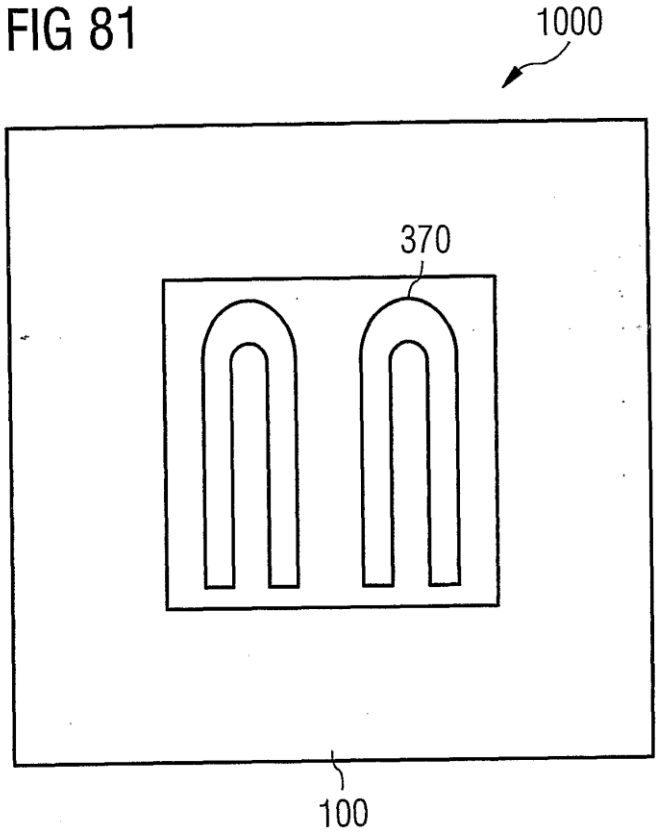

FIG 82

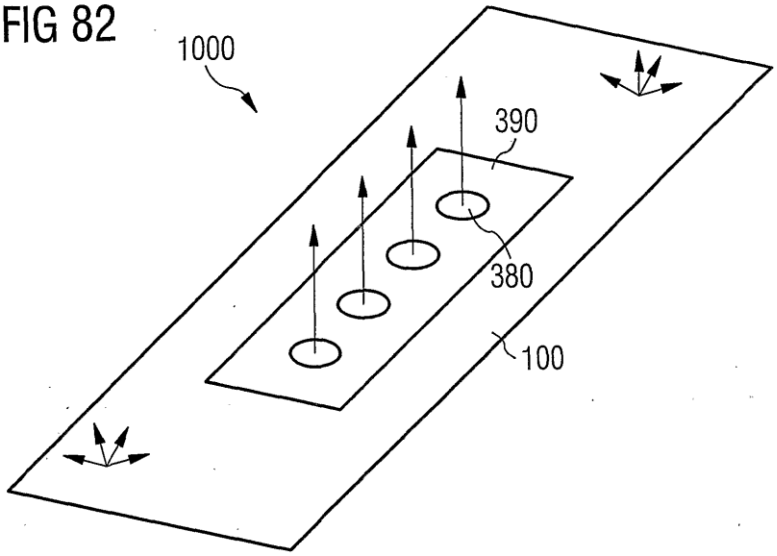

FIG 83

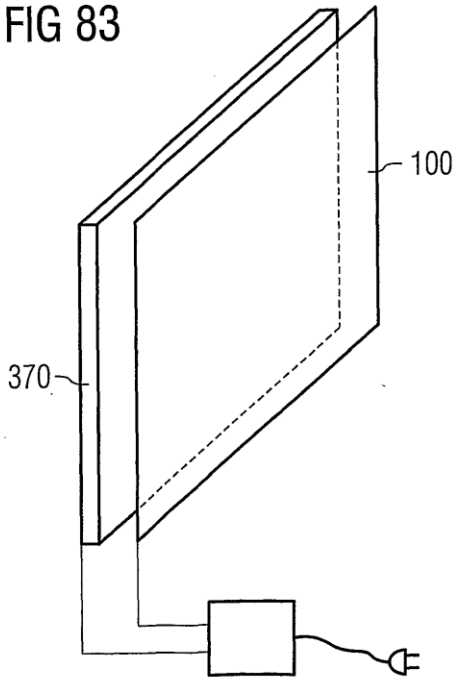

FIG 84A

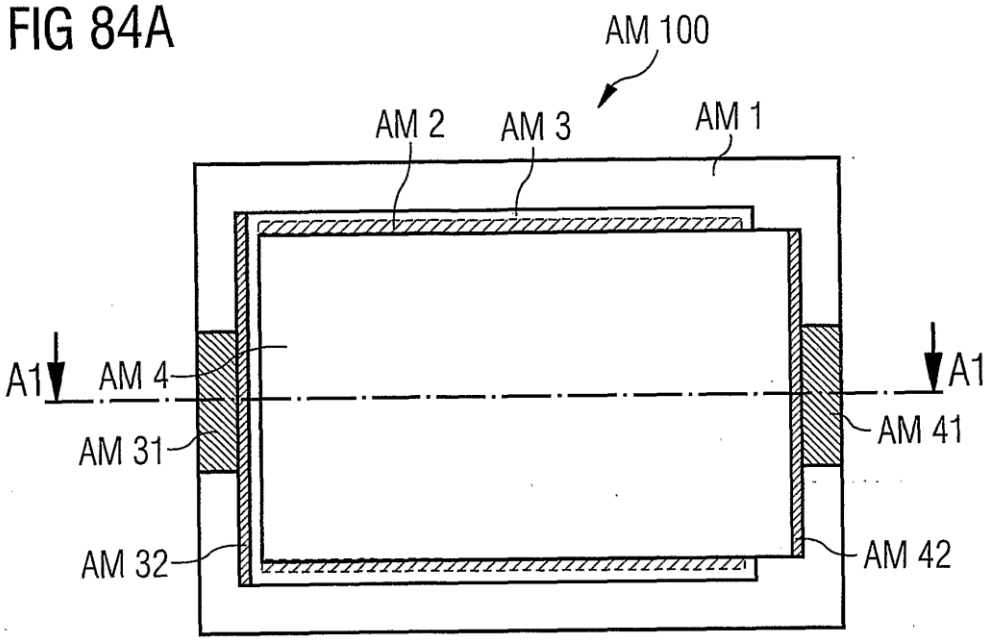

FIG 84B

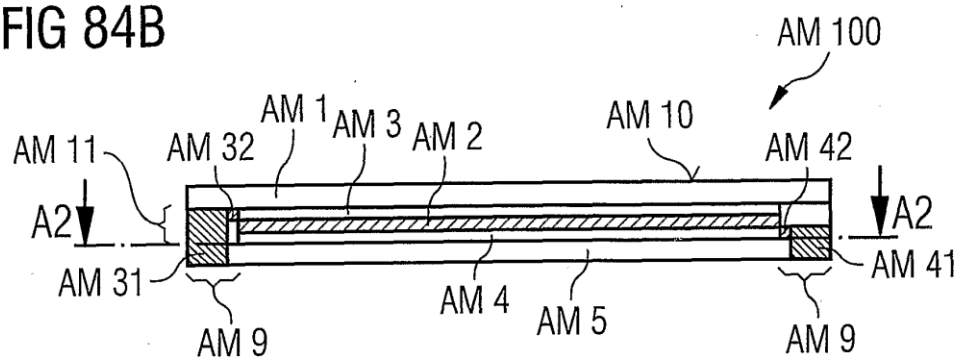

FIG 84C

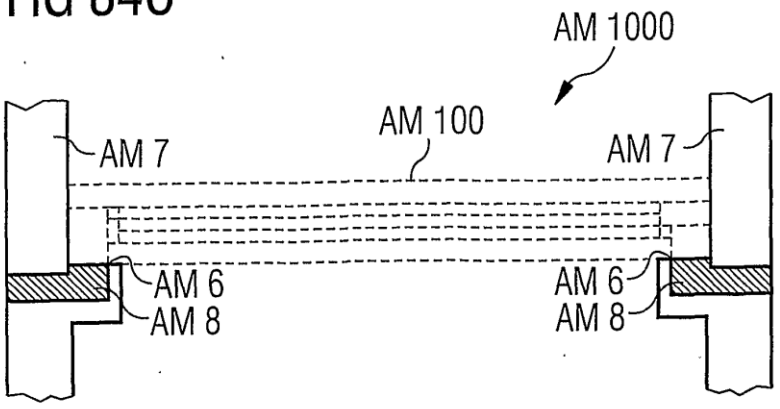

FIG 85

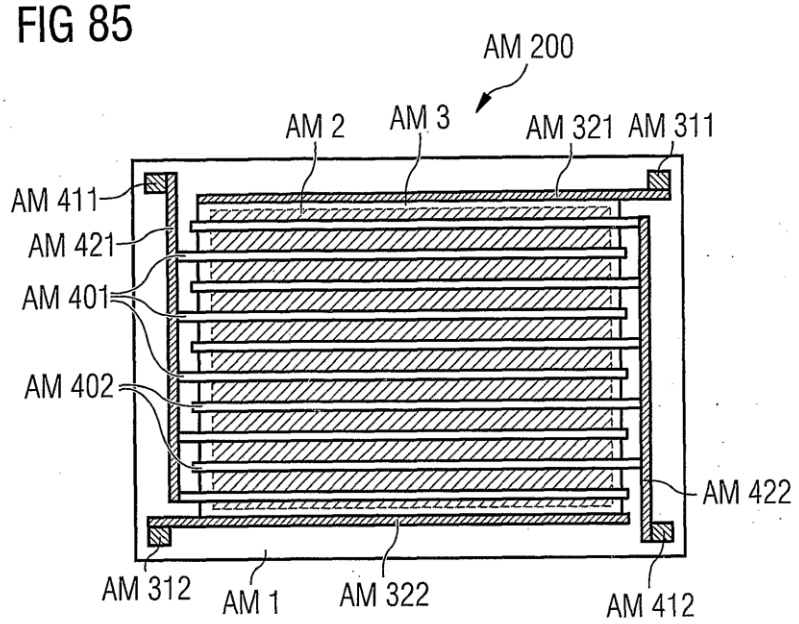
AM 200
AM 2
AM 3
AM 321
AM 311
AM 411
AM 421
AM 401
AM 402
AM 422
AM 312
AM 1
AM 322
AM 412

FIG 86

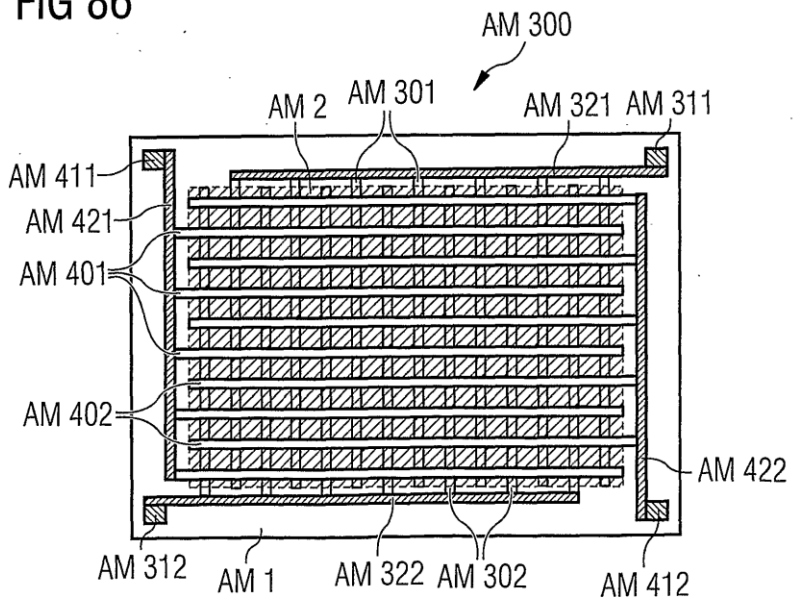
AM 300
AM 2
AM 301
AM 321
AM 311
AM 411
AM 421
AM 401
AM 402
AM 422
AM 312
AM 1
AM 322
AM 302
AM 412

FIG 87

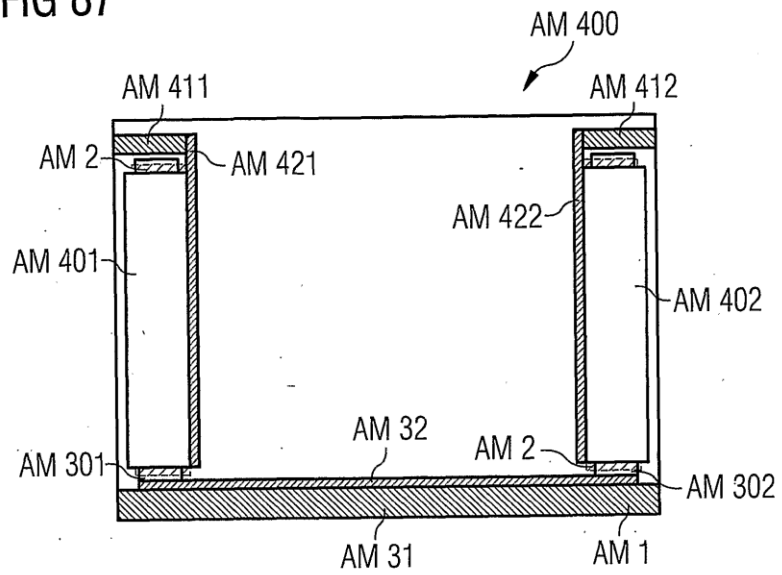
AM 400
AM 411
AM 412
AM 2
AM 421
AM 422
AM 401
AM 402
AM 32
AM 2
AM 301
AM 302
AM 31
AM 1

FIG 88

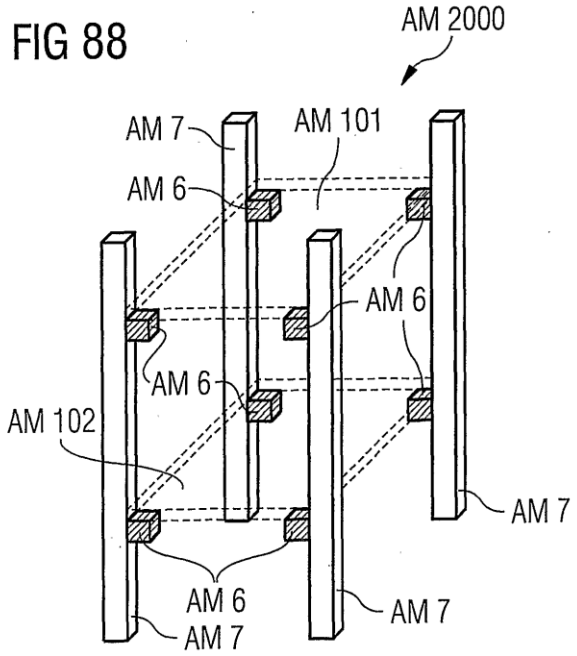
AM 2000
AM 7
AM 101
AM 6
AM 6
AM 6
AM 102
AM 7
AM 6
AM 7
AM 7

FIG 89A

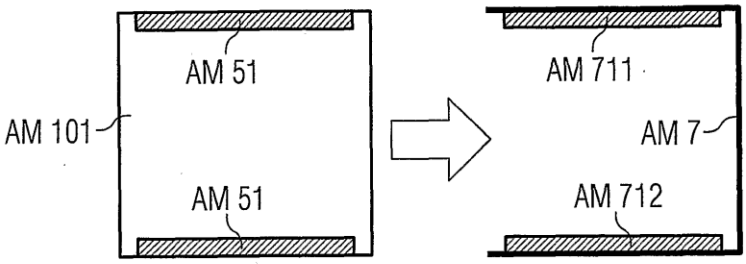

FIG 89B

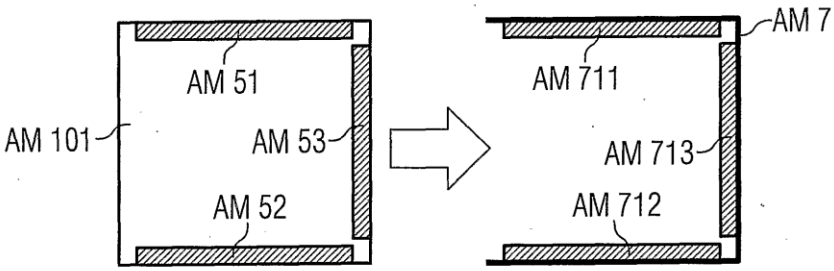

FIG 89C

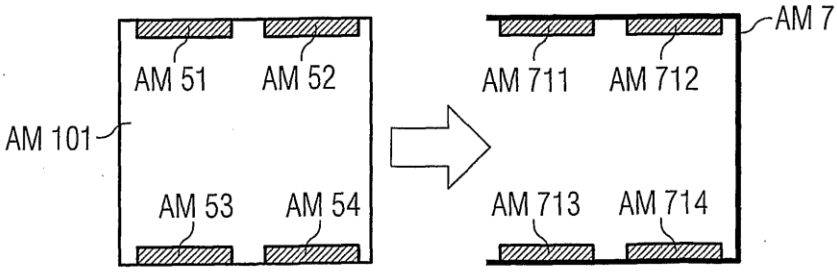

FIG 89D

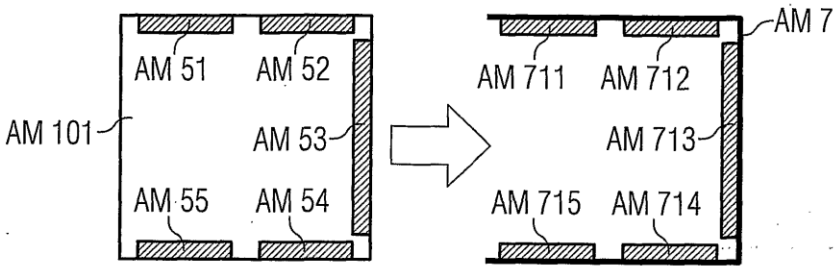
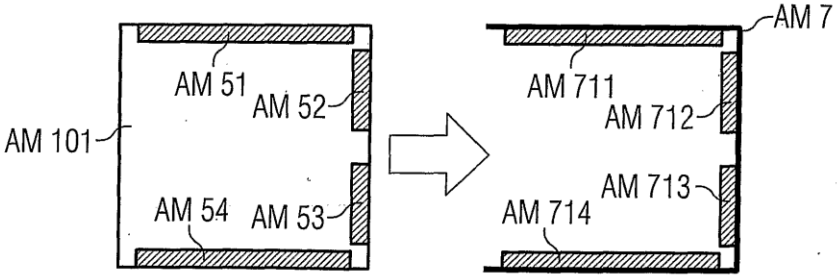
FIG 89E