UNITED STATES PATENT AND TRADEMARK OFFICE

BEFORE THE PATENT TRIAL AND APPEAL BOARD

SAMSUNG DISPLAY CO., LTD.,
Petitioner,

v.

PICTIVA DISPLAYS INTERNATIONAL LTD.,
Patent Owner.

Case No. IPR2024-01095
Patent No. 11,828,425

PATENT OWNER'S RESPONSE

TABLE OF CONTENTS

Page

I. INTRODUCTION 1

II. BACKGROUND 4

A. Overview of the ’425 Patent 4

III. OVERVIEW OF THE ALLEGED PRIOR ART 8

A. Diekmann (EX1004) 8

B. Suzuki (EX1006) 9

C. Ma (EX1010) 11

D. Lee (EX1008) 14

E. Koshihara (EX1012) 14

F. Caldwell (EX1011) 14

G. Harada (EX1009) 15

IV. MA DOES NOT RENDER CLAIMS 2 & 17 UNPATENTABLE 15

A. Ma Has Not Been Shown to Be Prior Art 16

1. Petitioner’s Post-Petition Evidence of Public Availability Should Not Be Considered 17

2. The Board Should Accord No Weight to Ms. Garland’s “Form” Declaration Because She Refused To Be Cross-Examined 18

3. Ms. Garland’s “Form” Affidavit Does Not Show Ma Was Publicly Available to Interested Artisans in the Relevant Period 19

4. Ma’s Dates and Alleged Website for Synthetic Metals Are Hearsay and Not Competent Evidence of Public Accessibility to Interested Skilled Artisans 24

Pictiva EX2047
Samsung v Pictiva
IPR2026-00129

Page

5. Whether Elsevier is a Publisher Says Nothing About Ma and the Only Evidence of Record Confirms Elsevier's "Publication" Practices Were Not Reliable 26

B. A Skilled Artisan Would Not Have Combined Ma's Experimental Bphen-Dopant with Diekmann or Suzuki with a Reasonable Expectation of Success 27

1. A Skilled Artisan Would Not Have Abandoned Diekmann's and Suzuki's Electron Donor Dopants for Liq's Electron Hopping Dopant..... 28

2. There is No Showing that Liq-Doping Would Have Led to Lower Diffusion or Higher Efficiencies..... 31

3. There is No Evidence that Ma's Liq-Doped Bphen ETL had "Known Benefits" Applicable to Diekmann or Suzuki 35

4. A Skilled Artisan Would Not Have Used Liq in the Claimed Ir-based PHOLED Due to Significant Quenching Problems 37

5. Ma Teaches Away from the Charge Imbalance the Combinations Would Cause 40

6. Petitioner's Expectations of Success Are Conclusory..... 42

7. A Skilled Artisan Could Not Have Reasonably Expected Success in Doping an Unknown ETL Host with Liq 44

V. DIEKMANN AND SUZUKI HAVE NO NEED FOR LEE'S ENCAPSULATION (CLAIM 4)..... 47

A. Neither Diekmann Nor Suzuki Need Any Further Encapsulation 47

B. Petitioner's Alleged Motivations Point to the Wrong Layers..... 48

C. Petitioner's Expectations of Success are Conclusory 51

Pictiva EX2047
Samsung v Pictiva
IPR2026-00129

Page

VI. PETITIONER HAS NOT OFFERED A SUFFICIENT MOTIVATION OR EXPECTATION OF SUCCESS TO ADD TOUCH-SENSITIVE ELEMENTS (CLAIMS 9-11) 53

A. Whether Touch Sensors Are "Well Known" is Not a Motivation 54

B. The Cost-Savings and Thinner Profile Rationales Are Irrelevant 54

C. Caldwell Does Not Teach Any General Benefit to Justify Using Touch Sensors 55

D. Diekmann Has No Need for Koshihara's Touch Sensors 56

E. Petitioner's Expectation of Success Are Legally Insufficient 57

VII. GESTURE CONTROL WOULD NOT HAVE BEEN OBVIOUS (CLAIM 12) 59

A. Diekmann or Suzuki's OLED "Device" is Not "Drivable By" Harada's Hand Gesture 59

B. Petitioner Does Not Explain What "More Natural Ways" Means or How and Why it Applies to Diekmann or Suzuki 60

C. Diekmann Has No Need for Additional User Controls 62

D. For Suzuki, Whether Gesture Control "Can" Be Applied to OLEDs or Was "Well Known" is Not a Motivation to Combine 62

E. Petitioner's Expectations of Success Are Conclusory 63

VIII. UNDER SAMSUNG'S INTERPRETATION, THE PRIOR ART HAS NOT BEEN SHOWN TO TEACH GESTURE CONTROL OR TOUCH SENSORS THAT ARE PART OF THE OLED DEVICES 64

IX. UNDER SAMSUNG'S INTERPRETATION, THE PRIOR ART HAS NOT BEEN SHOWN TO DISCLOSE "GENERAT[ING] ELECTROMAGNETIC RADIATION IN A SPECTRAL RANGE

Pictiva EX2047
Samsung v Pictiva
IPR2026-00129

Page

FROM INFRARED TO UV RADIATION DURING OPERATION" 65

X. CONCLUSION 65

Pictiva EX2047
Samsung v Pictiva
IPR2026-00129

TABLE OF AUTHORITIES

Page(s)

Cases

Abbott Vascular, Inc. v. FlexStent, LLC,
IPR2019-00882, Paper 48 (PTAB Oct. 2, 2020) 19

Acceleration Bay, LLC v. Activision Blizzard Inc.,
908 F.3d 765 (Fed. Cir. 2018) 23–24

Argentum Pharms. LLC v. Research Corp. Techs., Inc.,
IPR2016-00204, Paper 19 (PTAB May 23, 2016) 16

Blue Calypso LLC v. Groupon, Inc.,
815 F.3d 1331 (Fed. Cir. 2016) 20, 24

Cisco Sys. Inc. v. C-Cation Techs., LLC,
IPR2014-00454, Paper 12 (PTAB, Aug. 29, 2014) 59

Dynamic Drinkware, LLC v. Nat'l Graphics, Inc.,
800 F.3d 1375 (Fed. Cir. 2015) 16

Elbit Sys. of Am., LLC v. Thales Visionix, Inc.,
881 F.3d 1354 (Fed. Cir. 2018) 26

First Solar, Inc. v. Rovshan Sade,
IPR2023-00827, Paper 13 (PTAB Nov. 16, 2023) 20, 25

Grunenthal GMBH v. Alkem Labs. Ltd.,
919 F.3d 1333 (Fed. Cir. 2019) 45

Hulu, LLC v. Sound View Innovations, LLC,
IPR2018-00582, Paper 34 (PTAB Aug. 5, 2019) 63

Hulu, LLC v. Sound View Innovations, LLC,
IPR2018-01039, Paper 29 (PTAB Dec. 20, 2019) 16–18

In-Depth Geophysical, Inc. v. Conocophillips Co.,
IPR2019-00849, Paper 17 (PTAB, Mar. 30, 2020) 20, 24

Johns Manville v. Knauf Insulation,
IPR2018-00827, Paper 9 (PTAB Oct. 16, 2018) 58, 63

Pictiva EX2047
Samsung v Pictiva
IPR2026-00129

Keynetik, Inc. v. Samsung Elecs. Co.,
No. 2022-1127, 2023 WL 2003932 (Fed. Cir. Feb. 15, 2023).....58

Kinetic Concepts, Inc. v. Smith & Nephew, Inc.,
688 F.3d 1342 (Fed. Cir. 2012) 48, 56, 61

In re Kubin,
561 F.3d 1351 (Fed. Cir. 2009) 44

Kyocera Wireless Corp. v. ITC,
545 F.3d 1340 (Fed. Cir. 2008) 20

Laird Techs. Inc. v. A.K. Stamping Co.,
IPR2017-02038, Paper 6 (PTAB Mar. 14, 2018).....24

In re Lister,
583 F.3d 1307 (Fed. Cir. 2009) 23

In re Magnum Oil Tools Int'l, Ltd.,
829 F.3d 1364 (Fed. Cir. 2016) 42

Microsoft Corp. v. Corel Software, LLC,
IPR2016-01083, Paper 14 (PTAB Dec. 1, 2016) 24

NearMap US, Inc. v. Eagle View Techs. Inc.,
IPR2022-01009, Paper 28 (PTAB Dec. 14, 2023) 16

Personal Web Techs., LLC v. Apple, Inc.,
848 F.3d 987 (Fed. Cir. 2017) 61

Power Integrations, Inc. v. Semiconductor Components Indus., LLC,
IPR2017-01975, Paper 9 (PTAB Mar. 12, 2018).....24

Provisur Techs., Inc. v. Weber, Inc.,
No. 2021-1851, 2022 WL 17688071 (Fed. Cir. Dec. 15, 2022) 28

In re Ratti,
270 F.2d 810 (CCPA 1959).....31

Samsung Electronics Co., Ltd. v. LED Wafer Solutions, LLC,
IPR2021-01491, Paper 9 (PTAB Mar. 15, 2022).....53

Pictiva EX2047
Samsung v Pictiva
IPR2026-00129

Shenzhen Pincan Tech., Co., Ltd. v. The Ridge Wallet, LLC,
IPR2024-00340 (PTAB Nov. 20, 2024) 19

In re Stepan,
868 F.3d 1342 (Fed. Cir. 2017) 44, 52–53

Stryker Corp. v. Karl Storz Endoscopy-Am., Inc.,
IPR2015-00677, Paper 15 (PTAB Sept. 2, 2015) 25

TQ Delta, LLC v. Cisco Sys., Inc.,
942 F.3d 1352 (Fed. Cir. 2019) 44, 57

VidStream LLC v. Twitter, Inc.,
981 F.3d 1060 (Fed. Cir. 2020) 16

Virtek Vision Int'l ULC v. Assembly Guidance Sys.,
97 F.4th 882 ..... 49, 54, 62

Xerox Corp. v. Bytemark, Inc.,
IPR2022-00624, 2022 WL 3648989 (PTAB Aug. 24, 2022) 43, 58, 59, 63

Statutes

35 U.S.C. 311(b) 17

Rules and Regulations

37 C.F.R. § 42.6(a)(3) 36, 48, 59

37 C.F.R. §§ 42.6(a)(3), 42.104(b)(5) 36, 62

37 C.F.R. §§ 42.51–42.53 19

37 C.F.R. § 42.65(a) 53, 59, 63

37 C.F.R. § 42.104(b)(5) 48–49, 52, 58–59, 62

Fed. R. Evid. 803(6) 21, 25

Other Authorities

MPEP 2143 52

PTAB Consolidated Trial Practice Guide (Nov. 2019) 48, 59

Pictiva EX2047
Samsung v Pictiva
IPR2026-00129

EXHIBIT LIST

Exhibit	Description
2001	Disclaimer, U.S. Patent 11,828,425 (filed Oct. 25, 2024)
2002	Declaration of P. Morgan Pattison, Ph.D.
2003	Kim, H. M., Seo, J. H., Han, W. K., Lee, K. H., Kang, H. J., Yoon, S. S., & Kim, Y. K. (2011), Improvement of Mixed Electron Transport Structure Red Phosphorescent Organic Light-Emitting Diodes, Molecular Crystals and Liquid Crystals, 538(1), 53–60
2004	Arunandan Kumar, Ritu Srivastava, Priyanka Tyagi, D. S. Mehta, M. N. Kamalasanan, Effect of doping of 8-hydroxyquinolinatolithium on electron transport in tris(8-hydroxyquinolinato)aluminum, J. Appl. Phys. 1 June 2011; 109 (11): 114511
2005	Chan Seok Oh, Jun Yeob Lee, High triplet energy n-type dopants for high efficiency in phosphorescent organic light-emitting diodes, Organic Electronics, Volume 16, 2015, Pages 34-39
2006	Sunwoo Kang, Sang Ho Jeon, Taekyung Kim, Unraveling the complexation effect of electron transporting materials with Liq on the charge transport properties: A theoretical perspective, Chemical Physics Letters, Volume 810, 2023, 140207
2007	T. Sasaki, T. Oono, T. Shimizu, H. Fukagawa, Effects of Energy-Level Alignment on Operating Voltages of Blue Organic Light-Emitting Diodes. Adv. Mater. Interfaces 2023, 1, 2201925
2008	Vadim I. Adamovich, Steven R. Cordero, Peter I. Djurovich, Arnold Tamayo, Mark E. Thompson, Brian W. D'Andrade, Stephen R. Forrest, New charge-carrier blocking materials for high efficiency OLEDs, Organic Electronics, Volume 4, Issues 2–3, 2003, Pages 77-87
2009	Björn Lüssem, Chang-Min Keum, Daniel Kasemann, Ben Naab, Zhenan Bao, and Karl Leo, Doped Organic Transistors, *Chemical Reviews* 2016 *116* (22), 13714-13751
2010	U.S. Patent No. 11,585,504

Pictiva EX2047
Samsung v Pictiva
IPR2026-00129

2011	U.S. Patent No. 10,605,422
2012	U.S. Patent No. 9,797,567
2013	Federal Court Management Statistics for U.S. District Courts, available from https://www.uscourts.gov/statistics/table/na/federal-courtmanagement-statistics/2024/06/30-1
2014	Samsung Invalidity Contentions in the parallel district court case
2015	2024-12-16 Email from Samsung to Pictiva re "IPR2024-01095 – Stipulation"
2016	Deposition Transcript of Dr. Schubert with Ex. 1 of the deposition (Schubert Declaration)
2017	Intentionally omitted
2018	2025-05-05 Declaration of P. Morgan Pattison, Ph.D.
2019	2025-04-24 Holmes Transcript
2020	2025-04-18 Holmes Transcript
2021	Yang, Kwangmo et al., *Interfacial Exciton-Polaron Quenching in Organic Light-Emitting Diodes*, Physical Review X 14, 041009 (2024)
2022	Screen shot of https://www.ossila.com/products/8-quinolinolato-lithium (last visited 05/04/2025)
2023	Jun Yeob Lee, *Efficient electron injection in organic light-emitting diodes using lithium quinolate/Mg:Ag/Al cathodes*, Journal of Industrial and Engineering Chemistry 14, 676–678 (2008)
2024	Kim, B. Y. et al., *Efficient Green Phosphorescent Organic Light-Emitting Diodes Depending on Concentration of Lithium Quinolate in Electron Transport Layer*, Journal of Nanoscience and Nanotechnology, Vol. 13, 7998-8001 (2013)
2025	Le, T. N. et. al. *Suppression of Initial Degradation via an Interfacial Charge-Induced Overshooting Effect in Solution-Processed Organic Light-*

Pictiva EX2047
Samsung v Pictiva
IPR2026-00129

	Emitting Diodes, ACS Applied Materials & Interfaces 16, 69636-69644 (2024)
2026	Tanaka, I. et al., *Energy-transfer dynamics of blue-phosphorescent iridium and rhodium complexes doped in fluorescent molecules*, Journal of the SID 16/6, 695-701 (2008)
2027	C. Schmitz et al., *Lithium-Quinolate Complexes as Emitter and Interface Materials in Organic Light-Emitting Diodes*, Chem. Mater., 12, 3012-3019 (2000)
2028	Reineke, Sebastian et al., *Triplet-exciton quenching in organic phosphorescent light-emitting diodes with Ir-based emitters*, Physical Review B 75, 125328 (2007)
2029	printout of https://web.archive.org/web/20250000000000*/www.elsevier.com/locate/synmet (last visited 05/03/2025)
2030	Excerpt of Katona Rebuttal Report
2100	U.S. Patent No. 7,911,129
2101	K. Walzer et al., *Highly Efficient Organic Devices Based on Electrically Doped Transport Layers*, 107 Chem. Rev. 1233-71 (2007)
2102	U.S. Publication No. 2008/0116536 to Forrest
2103	Felipe A. Angel et al., *Silver-induced activation of 8-hydroxyquinolinato lithium as electron injection material in single-stack and tandem OLED devices*, Organic Electronics 59, 220-223 (2018)
2104	Min Seok Ki et al., *Improved Thermal Stability and Operational Lifetime of Blue Fluorescent Organic Light- Emitting Diodes by Using a Mixed-Electron Transporting Layer*, ACS Materials Lett. 4, 1676−1683 (2022)
2105	T. Sasaki et al., *Effects of Energy-Level Alignment on Operating Voltages of Blue Organic Light-Emitting Diodes*, Supporting Information for Adv. Mater. Interfaces 2023, 10, 2201925, available at DOI: 10.1002/admi.202201925 (supporting information for EX2007)

Pictiva EX2047
Samsung v Pictiva
IPR2026-00129

I. INTRODUCTION

This trial was instituted based solely on the Suzuki-Caldwell Ground for claim 9. The Institution Decision did not reach the merits for the other grounds or claims. On the full record, the Board should uphold the patentability of the challenged claims.

For claims 2 and 17, Petitioner has not established that Ma (EX1010) was publicly available and qualifies as a prior art printed publication. The Petition is silent on that issue. Petitioner's later-filed "form" declaration cannot be used to address an issue that is wholly absent from the Petition. At any rate, the declaration does not explain when, where, and how Ma was made publicly available to interested skilled artisans at the time of filing, only that Ma is *currently* available from Elsevier.

Even then, a skilled artisan would not have combined Ma with Diekmann or Suzuki with a reasonable expectation of success. Ma fabricated Alq_3-based fluorescent OLED devices each containing an electron-transport layer composed of BPhen doped with 17-50% Liq. Ma attributes its higher conductivity in the mixed electron-transport layers to "short hopping length for electron transport, compared to the pure BPhen." Ma 813. Nothing in Ma suggests that Liq acts as an electron donor to increase the electron density in the mixed layer. EX2019_2025-04-24_Holmes, 60:13-61:12, 47:12-18, 53:3-19, 58:20-59:6, 291:16-292:11; Pattison, ¶¶20-21.

Pictiva EX2047
Samsung v Pictiva
IPR2026-00129

In contrast, Diekmann and Suzuki's n-dopants are electron donors that increase electron density. Diekmann, 91 (n-dopant "acts as an electron donor"); Suzuki, [0333] (referencing He, EX1019); EX1019 (using Cs-doped BPhen); EX2101, 1245 ("cesium (Cs) acts as an efficient electron donor in organic films"); Pattison, ¶¶17-19. Given the completely different mechanisms of operation, a POSITA would not have used Liq as an n-dopant in Diekmann and Suzuki, especially not in a phosphorescent OLED ("PHOLED") device.

For example, Liq was known to have a weaker binding energy between Li and quinolate unit than that of LiF. EX2023_Lee_2008, 677. According to Dr. Holmes, lithium diffusion and the resulting triplet exciton quenching can be especially problematic in PHOLEDs because PHOLEDs were chosen for their high efficiency, and a POSITA would "try[] to [re]move every possible loss in order to get that high efficiency." EX2020_2025-04-18-Holmes, 313:19-316:19. Lithium diffusion was less a concern for Ma because fluorescent OLEDs were already "plagued by low efficiency because they can't emit out of the triplet state" and there were "already several factors that are preventing high efficiency before you start to consider these finer details." *Id*.

Nor would Liq predictably improve power or current efficiency or reduce driving voltages, the two alleged reasons to combine. EX2007, 2201925-2 (operating voltage for a blue OLED with Bphen doped with Liq "much higher than

Pictiva EX2047
Samsung v Pictiva
IPR2026-00129

that of Device-3" with an undoped BPhen), EX2105, at 3 (supporting date); EX2103, Fig. 2 (slightly decreasing EQE and higher driving voltages with increasing Liq% for OLEDs having the same hole-transport, emissive and electron-transport materials as Ma); EX2104, Figs. 4(a)-(b) (higher driving voltage and lower efficiencies as Liq% increases); EX2019-2025-04-24-Holmes, 258:6-262:8. Indeed, Liq has significant documented issues in PHOLEDs, including quenching, poor electron transportation, charge trapping, obstructed hole-electron recombination with dark spots, luminance decay, low efficiency, and weakened charge transport. *See* §§ IV.B.3-IV.B.4. Simply put, a skilled artisan would not have been motivated to n-dope an unknown ETL in a PHOLED with an experimental electron-hopping dopant like Liq with any reasonable expectation of success.

For claim 4, Petitioner ignores that Diekmann and Suzuki already had encapsulation layers and provides no reason for a skilled artisan to go through with the complex redesign to utilize Lee's annealed polymer encapsulation. Petitioner's conclusory and legally insufficient boilerplate reasoning also does not consider the impact of annealing on performance of n-doped PHOLEDs, including the degradation due to increased diffusion during annealing.

For the touch-sensitive elements in claims 9-11, Petitioner focuses its motivations on reasons to integrate an already existing, separate touch sensor into an OLED to reduce cost and thickness. None of these apply to Diekmann or Suzuki

Pictiva EX2047
Samsung v Pictiva
IPR2026-00129

because they do not have a separate touch sensor. The statements from Petitioner on expectations of success relied on by the Board in institution were not just brief, but entirely devoid of substance and insufficient for obviousness.

For claim 12, Petitioner has not shown that Harada teaches an OLED device "drivable by" gesture control. Harada's "gesture recognition" generates an input to a separate personal computer—akin to a keyboard and mouse—controlling the computer, but not the OLED device. Petitioner again rests on conclusory motivations and expectations of success.

Finally, Samsung has not demonstrated obviousness under claim interpretation advanced in the district court. For example, Samsung argues for element 1[f], "the emission spectrum [of the device] must include, at a minimum, the entire visible spectral range" (all claims). EX2016, Ex. 1, ¶¶195-198. Samsung has not demonstrated that this is the case for the PHOLEDs it relies on.

II. BACKGROUND

A. Overview of the '425 Patent

U.S. Patent No. 11,828,425 (the '425 Patent, EX1001) relates to organic light-emitting diode (OLED) technology at the heart of modern smartphones, televisions, wearables, computers and other devices. OLED technology provides higher resolutions, greater brightness, thinner panels, and higher power efficiency than prior technologies. The '425 Patent resulted from a collaboration between OSRAM

Pictiva EX2047
Samsung v Pictiva
IPR2026-00129

engineers who designed the OLEDs and industrial designers who proposed applications that could take advantage of the inventive OLEDs.

The ’425 Patent is directed to and claims OLED devices with a phosphorescent “iridium-containing compound.” EX1001, at 88:7-9. Unlike fluorescent emitters that emit light only from singlet excitons, which limits their quantum efficiency to 25%, phosphorescent emitters emit light from the triplet excitons with rapid conversion of singlet excitons to triplet excitons, “increasing the maximum possible efficiency of the OLED to 100%.” EX1003, ¶¶30-31. Thus, quenching of triplet excitons, including by dopants diffused from a doped ETL, is a far more serious concern for a phosphorescent system than for a traditional fluorescent system with already low efficiencies. EX2018, ¶45; EX2020_2025-04-18-Holmes, 313:19-316:19.

Material selections—including the emission layer and the layers immediately adjacent to the emission layer—are considerably different for a phosphorescent OLED than a fluorescent OLED. EX2002, ¶¶43-44. For a PHOLED, the materials must be carefully chosen not to quench the triplet excited state, which could then make the entire system unsuitable for OLED application. *Id.*

Structurally, the ’425 Patent’s “organic light-emitting diode” has “an organic layer sequence,” “a radiation exit area,” “an encapsulation,” and at least one “carrier.” EX1001, 1:28-31, 6:6-8. The organic layer sequence includes a “radiation-

Pictiva EX2047
Samsung v Pictiva
IPR2026-00129

emitting region" with an "emission layer" to "generate[] electromagnetic radiation in the spectral range from infrared radiation to UV radiation during operation," "an electron transport layer"—which may be n-doped—as a "charge carrier transport layer[]," and "an emission layer comprising an iridium-containing complex." *Id.* at 1:31-35, 2:13-15, 3:28-29, 88:7-9.

Figure 1 illustrates an exemplary "organic light-emitting diode 1" shown in a schematic band diagram:

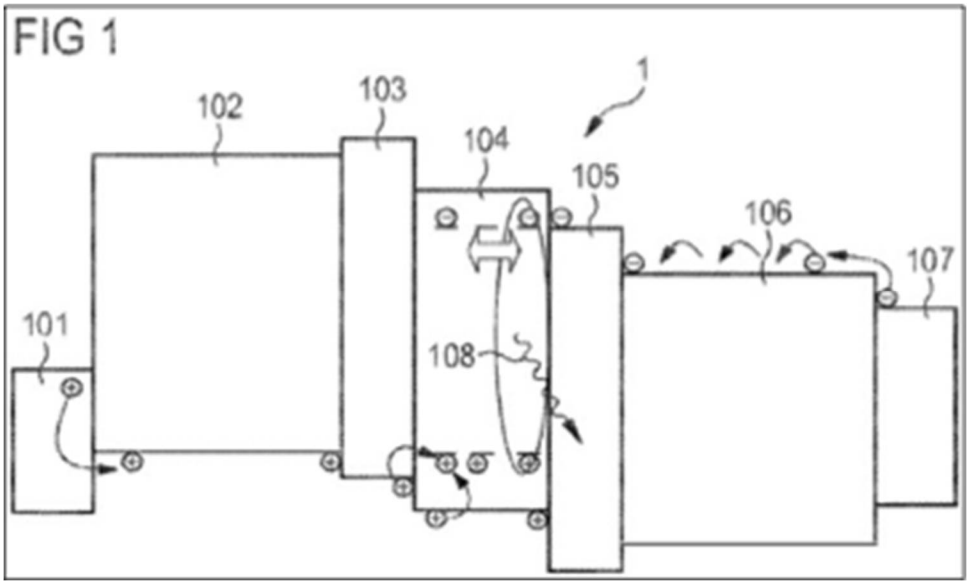

Id., Fig. 1. From left to right, Figure 1 depicts:

- an anode ("first electrode 101");
- a "hole transport layer 102" for "transport[ing] the positive charge carriers toward the radiation-emitting region 104";
- "an electron barrier layer 103, which prevents the penetration of electrons from the radiation-emitting region 104 into the hole transport layer 102";

Pictiva EX2047
Samsung v Pictiva
IPR2026-00129

- a radiation-emitting region 104, which "[generates] electromagnetic radiation";
- "a hole barrier layer 105, which prevents the penetration of positive charge carriers into the adjoining electron transport layer 106";
- an electron transport layer 106, which "adjoins the hole barrier layer 105 and transports negative charge carriers—electrons—from the … cathode[] to the radiation-emitting region 104"; and
- a cathode ("second electrode 107").

Id. at 24:33–62; *see* EX2002, ¶¶35-41. The hole-transport layer 102 and electron-transport layer 106 comprise "a matrix material that is p- and n-doped, respectively." EX1001, 24:63–67. 42. "Injection" layers can be added to the cathode or anode to improve electron and hole injection into the transport layers. *E.g.*, *Id.* at 28:16-18; *see* EX2002, ¶42.

The encapsulation "forms a seal of the organic layer sequence against environmental influences." *Id.* at 1:36–38. The '425 Patent teaches the "surprising[]" result that a second encapsulation layer with high amorphicity in combination with a non-amorphous first encapsulation layer enables a "hermetically impermeable" encapsulation because the amorphous second layer "does not continue structure and/or lattice defects" from the first encapsulation layer. *Id.*, 44:18-39; *see also* cl. 4, Fig. 19, 10:12-22, 44:11-39, 48:17-47.

Pictiva EX2047
Samsung v Pictiva
IPR2026-00129

The ’425 Patent also describes touch sensors and gesture controls that change the operating state of the luminaire by switching the luminaire on or off, dimming the luminaire, or increasing its brightness. *E.g.*, *id.*, cls. 9-12, Abstract, 14:31-37, 15:26-35, 18:31-37, 23:17-20, 61:38-45, 62:14-21, 64:1-10, 68:46-54, 71:58-72:3, 74:1-30, 76:59-67, 79:48-55, 80:15-22, Figs. 31A-B, 35, 42A-C, 46A-B.

III. OVERVIEW OF THE ALLEGED PRIOR ART

A. Diekmann (EX1004)

Diekmann describes an “an organic lighting device.” Diekmann, 1. Figure 2A describes a series of layers, listed below:

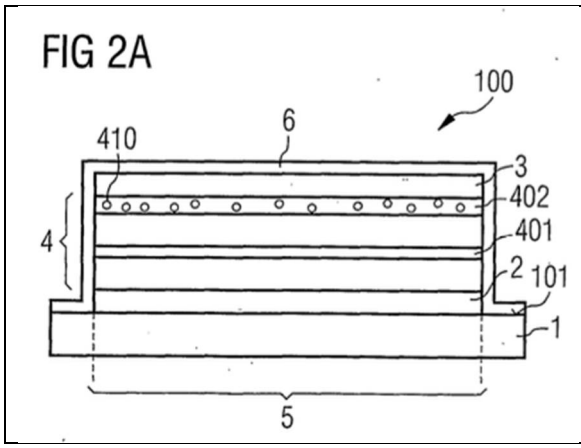

Thin-film encapsulation 6
Second electrode 3 (cathode)
Doped layer 402 with dopant 410
Unlabeled Layer
Layer 401 suitable for generating light
Unlabeled layer
First electrode 2 (anode)
Substrate 1 with main surface 101

Diekmann, 91-92, Fig. 2A; EX2002, ¶45.

Petitioner alleges that layer 402 is the claimed electron-transport layer (“ETL”). Pet. 42. Petitioner’s expert, Dr. Holmes, asserts that an electron injection layer is unnecessary when the OLED includes a doped ETL. EX1003, ¶34. Diekmann states that “dopant 410” in the doped layer 402 “***acts as an electron donor***.” Diekmann 91; EX2002, ¶¶50-51. Diekmann’s “[p]referred n-dopants are

cesium, barium and lithium fluoride." Diekmann, 10. Dr. Holmes agrees that at least cesium and barium are electron donors. EX2019_2025-04-25, 63:17-64:1, 305:12-20.

While Petitioner alleges that the "record is silent on whether the '425 Examiner considered Diekmann" (Pet. 9), that is false. Diekmann and its U.S. equivalent were both expressly considered during prosecution of the '425 Patent. '425 Patent, [56] (listing WO 2008/040323 A1 and U.S. Patent Pub. No. 2010/157585 A1); *see* EX1025 at 1406-1413, 2055. Indeed, four examiners across each of the parent prosecutions to the '425 Patent have considered Diekmann and found the claims allowable. EX2010 (U.S. Patent No. 11,585,504), [56] (listing WO 2008/040323 and U.S. Patent Pub. No. 2010/157585); EX2011 (U.S. Patent No. 10,605,422), [56] (same); EX2012 (U.S. Patent No. 9,797,567), [56] (same).

B. Suzuki (EX1006)

Suzuki describes bottom emitting "organic electroluminescent device" with a "gas barrier resin substrate material." Suzuki, [0001]. Petitioner relies on Figure 9 and the accompanying description in paragraph 274:

Pictiva EX2047
Samsung v Pictiva
IPR2026-00129

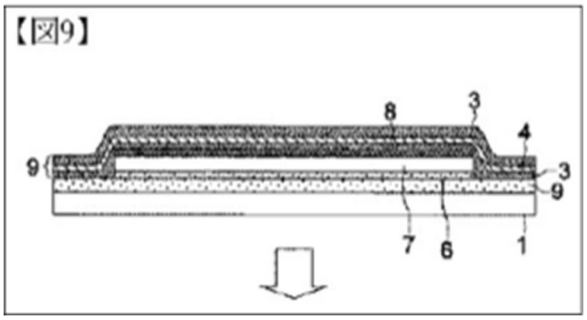	Thin film laminate 9	Buffer film 3
		Barrier film 4
		Buffer film 3
	Cathode 8	
	Organic layer 7	"comprising a hole transport layer, a light emission layer, an electron transport layer, and the like"
	Anode 6	
	Thin film laminate 9	
	Resin substrate 1	

Id., Fig. 9, [0274]; EX2002, ¶58. Suzuki discloses using electron injection layers next to the cathode, such as a LiF layer and "an electron transport layer with a high n nature doped with impurities." *Id.*, [0295], [0333], [0338]. Suzuki references EX1019 for an example of a doped ETL composed of cesium-doped Bphen.

Suzuki also uses a thin film laminate made of a ceramic barrier layer 4 in between two buffer film layers 3. *Id.*, [0068]-[0069] (metal oxides, metal nitrides, metal carbides, metal sulfides, metal halides, such as silicon oxide, silicon oxide nitride, or silicon nitride), [0274], Fig. 9. Barrier film 4 is a "dense intervening layer" with "low water vapor transmission" comprising "a ceramic composition with low or no carbon content and having at least Si and O atoms." *Id.*, [0117].

Pictiva EX2047
Samsung v Pictiva
IPR2026-00129

C. Ma (EX1010)

Ma builds off prior reports of doping Alq_3 with lithium (Li) and doping Bphen with Alq_3. Ma, 810. Ma admits that "no work" had previously been done on lithium quinolate (Liq or 8-hydroxy-quinolinato lithium) as a dopant in a Bphen (4,7-diphyenyl-1,10-phenanthroline) electron-transport layer. *Id.* There were only a "few studies" about Liq and then only as a separate electron injection layer. *Id.* Ma never suggests that Liq would be a suitable additive to all OLED systems. EX2002, ¶¶88-91.

Ma's OLED is an Alq_3-based, fluorescent emissive layer sandwiched between an Liq-doped Bphen as the "electron transport layer (ETL)" and F_4-TCNQ (tetrafluro-tetracyano-quinodimethane) doped *m*-MTDATA (4,4′,4″-tris(3-methylphenylphenylamino)triphenylamine) as the "hole transport layer." Ma, Abstract; EX2002, ¶¶61-63. Ma uses LiF as an electron injection layer. *Id.*, 811, Fig. 2. Ma heavily dopes Bphen with Liq alongside variably doping *m*-MTDATA with F_4-TCNQ, surrounding its Alq_3 emission layer. EX2002, ¶92; Ma, Abstract, 810–811. Ma then compares "[t]he conductivity of [those] carrier transport layers with different doping concentration[s]" (ratios "x" and "y") to a "referenced device (without doping)" to show a "current" and "power efficiency":

	Complete Device
Anode	ITO
HTL	*m*-MTDATA: x wt.% F_4-TCNQ (40nm)

Pictiva EX2047
Samsung v Pictiva
IPR2026-00129

Interlayer	NPB (10nm)
Emission layer	Alq_3 (20 nm)
ETL	BPhen:y wt.% Liq (50 nm)
EIL	LiF (1 nm)
Cathode	Al (130nm)

Ma, Abstract, 810-11, Fig. 3; EX2002, ¶¶61-64, 92-93. Ma attempts to achieve comparable hole and electron conductivity. *See* Ma, Fig. 6 (comparing J-V curves for hole-only devices with different p-doping concentrations with J-V curves of electron-only devices having different Liq concentrations); Fig. 3 (best current and power efficiency for a device with 33% Liq-doped ETL and 0.3% p-doped HIL). Ma makes no general statement about doping any other ETL materials besides BPhen with Liq or with other emitter layers besides undoped fluorescent Alq_3. EX2002, ¶67. Ma's conclusion about performance enhancement is expressly tied to the specific material set, dimensions, and doping concentrations in this simplified, fluorescent Alq_3-based stack. *Id.*, ¶¶94-97.

Ma does not disclose and Petitioner's expert, Dr. Holmes, does not analyze, how performance of Ma's devices compared to that of OLED devices having ETLs doped with n-dopants such as cesium, barium or LiF. EX2002, ¶89 (Ma's comparison is to an undoped device); EX2019, 140:16-141:5. Additionally, Dr. Holmes acknowledges that in Ma, "Liq is improving the mobility of electrons in the transport material" but Ma does not "explicitly teach[]" that Liq is an electron donor.

Pictiva EX2047
Samsung v Pictiva
IPR2026-00129

EX2019, 62:14-22. Dr. Holmes also does not contend that Liq is an electron donor. *Id.* at 63:2-15; *see also id.*, 291:16-292:11 (Dr. Holmes does not believe that Liq doping in Bphen reduces injection barrier); Ma, 813 (postulating that Ma improves electron conductivity through "short hopping length for electron transport"). Ma also does not disclose and Dr. Holmes did not analyze, how diffusion of metal ions or atoms in Ma's devices compared to diffusion in devices with ETLs doped with cesium, barium or LiF. EX2019-2025-04-24-Holmes, 28:18-29:14 (arguing that dopant diffusion already a solved problem), 139:10-141:22.

Ma also emphasizes the critical need for maintaining "efficient charge balance in the emission zone." *Id.*, Abstract, 812 ("[T]he high carrier balance is reached in the emission zone, which leads to the enhanced current and power efficiency at low driving voltage"), 813 ("current efficiency" depends "on the carrier balance"), 814 (discussing "good balance" between electrons and holes with "efficient charge balance" in the emission layer). This "good carrier balance" is "one of the most important factors in getting excellent performance in OLEDs." *Id.* at 814. That balance is tailored to a fluorescent EML (Alq_3) and the specific material set (*m*-MTDATA doped with F_4-TCNQ, NPB, Bphen doped with Liq, LiF) for the injection and transport layers surrounding that EML. EX2002, ¶¶65-66.

Ma's results focused on a "33 wt.% ratio" of Liq in BPhen for the electron-transport layer with a "0wt.%, 0.3wt.%, 2wt.% and 4wt.%" ratio of F_4-TCNQ in *m*-

Pictiva EX2047
Samsung v Pictiva
IPR2026-00129

MTDATA for the hole-transport layer surrounding the fluorescent Alq_3-based emissive layer ("EML"). *Id.* at 810-811, 814. Ma makes no general statement about doping any other materials besides BPhen with Liq or with different EMLs besides the undoped Alq_3. EX2002, ¶67.

D. Lee (EX1008)

Lee describes encapsulation using parylene-based polymer layers—a "semi-crystalline parylene-based polymer" and an annealed "highly crystalline parylene-based polymer"—sandwiching an inorganic barrier layer 34. Lee, [0002], [0005], [0020]-[0024], Fig. 2. Lee reports an "improved lifetime" in contrast to "prior OLEDs having polyacrylate or amorphous parylene barrier layers." *Id.*, [0020]. Lee does not involve an OLED with n-doped ETLs. Nor does it explain which parylene materials would be suitable for Diekmann or Suzuki, what would be the temperature profile during annealing, or how the annealing process would affect dopant diffusion during annealing.

E. Koshihara (EX1012)

Koshihara describes a two-electrode touch panel structure as part of the sealing substrate. Koshihara, [0002], [0004], [0028], [0030]-[0031], Fig. 3.

F. Caldwell (EX1011)

Caldwell describes a touch-sensor for a bottom-emitting OLED device by adding a touch electrode and an insulating layer to an OLED stack. Caldwell, [0004]-[0006], [0074], Fig. 14C. Caldwell explains that separate touch sensitive

Pictiva EX2047
Samsung v Pictiva
IPR2026-00129

components are "complicated" and "costly" where "the light … can be attenuated … by the touch sensor components before it reaches the user." *Id.*, [0006]. Instead of separate touch sensors, Caldwell proposes integrating that touch sensor within the display panel to "greatly reduce the cost and complexity" by "reduc[ing] or eliminat[ing] the extra material and manufacturing cost." *Id.*, [0007]

G. Harada (EX1009)

Harada describes "gesture recognition using a hand shape" that provides a command "input in more natural ways" to an attached "personal computer." Harada, [0071], [0073] (giving the example of instructing the computer to "zoom in").

IV. MA DOES NOT RENDER CLAIMS 2 & 17 UNPATENTABLE

Grounds II and VII rely on Ma—a purported publication—for using Liq as an n-dopant in Diekmann and Suzuki's electron-transport layer(s). Pet. 36-38 (Ground II), 69-70 (Ground VII). The institution decision did not decide whether Ma qualifies as prior art, and Petitioner has not established that Ma qualifies as a printed publication before the critical date. Petitioner submitted a "form" custodial declaration after the Petition. This business record declaration designed to address hearsay and authenticity is facially insufficient to support the separate issue of publication. Even so, no skilled artisan would have extended Ma's experimental Liq-doping in Bphen in a fluorescent OLED having a single undoped EML to Diekmann or Suzuki's multi-emissive layer OELD having at least one EML containing doped

Pictiva EX2047
Samsung v Pictiva
IPR2026-00129

phosphorescent emitter and allegedly already having solved the dopant diffusion problem, or could have done so with a reasonable expectation of success.

A. Ma Has Not Been Shown to Be Prior Art

Petitioner bears the burden of production to establish that Ma is prior art. *See Dynamic Drinkware, LLC v. Nat'l Graphics, Inc*., 800 F.3d 1375, 1379 (Fed. Cir. 2015); *Hulu, LLC v. Sound View Innovations, LLC*, IPR2018-01039, Paper 29 at 3 (PTAB Dec. 20, 2019) (precedential) (requiring the "petition" to establish a publication is prior art); *Argentum Pharms. LLC v. Research Corp. Techs., Inc*., IPR2016-00204, Paper 19 at 9 (PTAB May 23, 2016) (quoting *In re Wyer*, 655 F.2d 221, 227 (CCPA 1981)) (similar). Yet, in the Petition, Petitioner provided no discussion or evidence that Ma qualifies as a prior art "printed publication." Pet. 5.

Generally, significant, external evidence—Copyright Office records, Library of Congress records, MARC records, Internet Archive records, Amazon listings, librarian declarations, etc.—is needed to prove the ***when***, ***how***, and ***to whom*** of access by skilled artisans and why the publisher was "established." *VidStream LLC v. Twitter, Inc*., 981 F.3d 1060, 1062-63, 1065-67 (Fed. Cir. 2020); *NearMap US, Inc. v. Eagle View Techs. Inc.*, IPR2022-01009, Paper 28 at 25-27 (PTAB Dec. 14, 2023) (similar). There is none of this evidence in the record here. Indeed, the only evidence offered by Petitioner—a "form" business record declaration from an Elsevier employee—was filed post-petition and should not be considered. That

Pictiva EX2047
Samsung v Pictiva
IPR2026-00129

declarant refused to be cross-examined and thus the declaration should be given no weight. EX3102 at 2. Even then, though, Petitioner has failed to show Ma was sufficiently publicly accessible to be prior art.

1. Petitioner's Post-Petition Evidence of Public Availability Should Not Be Considered

The Petition presents no evidence or argument that Ma is a printed publication, and it is entirely improper for Petitioner to rely on evidence submitted post-petition to establish this foundational issue. The statute requires the Petition to identify the "***ground*** on which the challenge to each claim is based, and ***the evidence that supports the grounds*** for the challenge to each claim." 35 US.C. 312(a). A ground is "***prior art*** consisting of patents ***or printed publications***" under "section 102 or 103." 35 U.S.C. 311(b). Indeed, *Hulu* makes clear that the "statute requires that the petition identify *with particularity* the grounds for institution and evidence supporting such grounds," including "the prior art relied upon and evidence that it qualifies as such." *Hulu*, Paper 29 at 13.

Here, Petitioner's only evidence of and only argument for publication came on November 20, 2024 in its pre-institution reply. Paper 8 at 1-3. To allow Petitioner to rely on argument and evidence only introduced after the Petition would incentivize all Petitioners to ***never address*** the prior art status of publications in the Petition—as Petitioner has done here, contrary to precedent and the clear burden

Pictiva EX2047
Samsung v Pictiva
IPR2026-00129

required of Petitioners to support its grounds in the Petition. The Board should thus disregard the untimely Garland Declaration.

Hulu does not hold otherwise. While *Hulu* permits a Petitioner, post-petition, to "***further*** support [its] argument that a reference qualifies as a printed publication," it does not authorize Petitioner to make the argument for the first time in a post-petition filing. *Hulu*, Paper 29 at 15 (Petitioner's cannot "reopen the record … by, for example, changing theories after filing a petition.") (citing *Intelligent Bio-Sys., Inc. v. Illumina Cambridge, Ltd*., 821 F.3d 1359, 1369–70 (Fed. Cir. 2016)); *see id.* at 21 (allowing *additional* argument and evidence on publication status). The Petition contains no argument for publication or even a theory for publication. The late filed evidence on publication was entirely improper and should be disregarded.

2. The Board Should Accord No Weight to Ms. Garland's "Form" Declaration Because She Refused To Be Cross-Examined

Petitioner's sole evidence for public accessibility of Ma is a single, "form" affidavit from an Elsevier employee, Ms. Garland, based in the United Kingdom. Pictiva sought to depose Ms. Garland, but she was apparently "unwilling to testify." EX3102 at 2. While the Board did not authorize a motion to strike this testimony, the Board rightly noted that unavailability for cross examination impacts "the testimony's weight." *Id.*, 1.

Pictiva EX2047
Samsung v Pictiva
IPR2026-00129

Petitioner is required to produce its declarants for cross-examination by Pictiva. 37 C.F.R. §§ 42.51–42.53; CTPG at 23-24 ("[A] party presenting a witness's testimony by affidavit should arrange to make the witness available for cross-examination. This applies to … non-party witnesses."). Where a party has failed to meet that requirement, the appropriate remedy should be expungement. *See Shenzhen Pincan Tech., Co., Ltd. v. The Ridge Wallet, LLC*, IPR2024-00340 (PTAB Nov. 20, 2024), Paper 24 ("Because Petitioner has not made Dr. Cameron available for cross-examination, Petitioner has failed to comply with the applicable rules in this proceeding, to Patent Owner's detriment"—striking the declaration). Absent striking the declaration, to avoid "manifest[] unfair[ness]" the Board must give the declaration no weight. *See Abbott Vascular, Inc. v. FlexStent, LLC*, IPR2019-00882, Paper 48 at 34 (PTAB Oct. 2, 2020) ("[i]t would be manifestly unfair for [Ideahub] to affirmatively rely on the Declaration of [Mr. Lee]…while at the same time contending that it has no control over [Mr. Lee] and refusing to present him for deposition.").

3. Ms. Garland's "Form" Affidavit Does Not Show Ma Was Publicly Available to Interested Artisans in the Relevant Period

Ms. Garland's form affidavit also does not address Ma's public accessibility in the relevant period. A reference is considered "publicly accessible" if the document has been "disseminated or otherwise made available to the extent that

Pictiva EX2047
Samsung v Pictiva
IPR2026-00129

persons interested and ordinarily skilled in the subject matter or art exercising reasonable diligence[] can locate it." *Kyocera Wireless Corp. v. ITC*, 545 F.3d 1340, 1350 (Fed. Cir. 2008) (citation and internal quotation marks omitted). A "[p]ublished in print" online date without the "how," "where" or "to whom" cannot establish online public availability. *In-Depth Geophysical, Inc. v. Conocophillips Co.*, IPR2019-00849, Paper 17 at 9-10 (PTAB, Mar. 30, 2020); *First Solar, Inc. v. Rovshan Sade*, IPR2023-00827, Paper 13 at 18 (PTAB Nov. 16, 2023) (archive with no evidence of indexing); *Blue Calypso LLC v. Groupon, Inc*., 815 F.3d 1331, 1349-50 (Fed. Cir. 2016) (no evidence of online viewing, downloading, indexing, or any roadmap fatal to publication). Petitioner's only evidence from its pre-institution reply—a "form" business records affidavit—fails to meet this test.

First, Ms. Garland's declaration is a generic business records affidavit meant to address evidentiary objections to hearsay, not public availability. The bulk of her testimony has nothing to do with Ma or accessibility by interested skilled artisans. Ms. Garland never testifies that ***Ma*** (as Exhibit A) was a business record as of 2008-2009. Ma is never identified as one of the "certain records" for which Ms. Garland is a "custodian." EX1036, ¶4. While Ms. Garland mentions "metadata," she offers no testimony on Ma's or Exhibit A's specific metadata. *Id.,* ¶10. She never even purports to assert that the purported business record practices of Elsevier prior to the filing date of the '425 Patent. Instead, she makes only generic statements about

Pictiva EX2047
Samsung v Pictiva
IPR2026-00129

present-day Elsevier practices that are not tied to Ma, not related to the Synthetic Materials journal Ma was allegedly published in, and not within the appropriate time frame before the filing of the '425 Patent.

Ms. Garland's untimely testimony came too late to establish the crucial element of public availability to support Ma's alleged publication. Ms. Garland never testifies that Exhibit A attached to her declaration is what existed on August 29, 2008. *See*, *e.g.*, EX1036, ¶¶9-11. Instead, Ms. Garland describes this version of Ma "***as it existed on or about November 8, 2024***," noting that it is "currently available for public download" and presently "***is*** maintained in the ordinary course of Elsevier's business." *Id.* This information on a present-day record and practice is too late to establish public accessibility in 2008-2009 or to overcome a hearsay objection to Ma's date over a decade earlier. Fed. R. Evid. 803(6) (record must be "made at or near the time"). It also says nothing about the version of Ma as it existed in 2008.[1]

[1] While the Board in IPR2022-01094 preliminarily found for the purposes of institution that Exhibit A to the Garland declaration is the same as Ma, that is unsurprising because Exhibit A is the "current" version found on ScienceDirect's website.

Pictiva EX2047
Samsung v Pictiva
IPR2026-00129

Although the Board found her conclusion sufficient for the purposes of institution in IPR2022-01094 under the reasonable likelihood standard, her actual testimony is conclusory and generic. *Id.*, ¶11. The only Ma-specific passage in her declaration that is not referring to the present day is copied below:

> 11. J. Ma, et. Al., "Organic light-emitting diodes based on new n-doped electron transport layer" was published in Synthetic Metals, Vol. 158, Issues 21-24 and was available online on August 29, 2008.

EX1036, ¶11. The declaration does not explain what is meant by being "available." This statement is not sufficient to meet the test for public availability. While she testifies it "was published" in Synthetic Metals, she does not say ***when*** or ***how*** or ***to whom***. She also does not provide any publication details about Synthetic Metals let alone this particular issue, calling into question the ***where*** of publication and ***to whom***. She tellingly does not even link paragraph 11's statement to Exhibit A, leaving open the question of exactly what version of Ma she is discussing. While she adds Ma was "available online" on August 29, 2008, she again does not say ***where***, ***how***, or ***to whom*** it was accessible.

At institution in IPR2024-01094, the Board recognized that Ms. Garland's declaration was not dispositive, but gave the benefit of the doubt to Petitioner, explaining that the issue should be explored more post-institution. IPR2024-01094, Paper 11 at 16.

Pictiva EX2047
Samsung v Pictiva
IPR2026-00129

Pictiva nevertheless addresses some of the Board's initial views of Ms. Garland's declaration. First, Ms. Garland's declaration did not "directly address[]" versioning concerns. *Id*. She says nothing about versioning in her declaration. Second, Ms. Garland did not demonstrate "personal knowledge about … Ma's public accessibility." *Id.* She expressed *no* familiarity with Ma at all, let alone Ma as it existed in 2008. Third, Ms. Garland did not address whether an interested party would have been able to find ***Ma***. *Id.* Ms. Garland's testimony was exceedingly generic about what Elsevier does currently: "publishes and makes available technical articles" and abstracts for "download." That generic testimony says nothing about Ma or Elsevier's practices before the filing date. Fourth, Ms. Garland did not testify that Ma would have been available "online … via an internet search engine." *Id.* at 18. There is no support in the record for this nor any evidence of indexing and searching let alone before the filing date.

Her testimony is legally insufficient. An article in Elsevier's digital library is not prior art unless it was "sufficiently accessible to the public interested in the art" as of the critical date. *In re Lister*, 583 F.3d 1307, 1311 (Fed. Cir. 2009) (manuscript not publicly accessible until indexed by commercial database).This requires showing ***when***, ***where***, ***how***, and ***to whom*** Ma was publicly accessible before the filing date of the '425 Patent. *See Acceleration Bay, LLC v. Activision Blizzard Inc.*, 908 F.3d 765, 773 (Fed. Cir. 2018) ("[P]ublic accessibility requires more than technical

Pictiva EX2047
Samsung v Pictiva
IPR2026-00129

accessibility.") (cleaned up). Vague notions of "online" cannot meet this standard. Neither Petitioner nor Ms. Garland have even attempted to do so.

4. Ma's Dates and Alleged Website for Synthetic Metals Are Hearsay and Not Competent Evidence of Public Accessibility to Interested Skilled Artisans

The dates on the face of Ma—which Petitioner did not rely on in the Petition—are unsupported hearsay as a basis for proving publication. *See In-Depth Geophysical, Inc. v. Conocophillips Co*., IPR2019-00849, Paper 17 at 5, 12 (PTAB Mar. 30, 2020) ("Simply pointing to a date, alleged to be a 'publication date,' … without interpretation or explanation, does not meet the threshold standard to show that it is reasonably likely that a reference was public[ly] accessible on that date."). A legion of case law agrees that disembodied dates are legally insufficient. *Microsoft Corp. v. Corel Software, LLC*, IPR2016-01083, Paper 14 at 13–14, 15 (PTAB Dec. 1, 2016) ("copyright notice" insufficient, additional evidence is necessary); *Laird Techs. Inc. v. A.K. Stamping Co.*, IPR2017-02038, Paper 6 at 10 (PTAB Mar. 14, 2018); *Power Integrations, Inc. v. Semiconductor Components Indus., LLC*, IPR2017-01975, Paper 9 at 12–14 (PTAB Mar. 12, 2018); *Stryker Corp. v. Karl Storz Endoscopy-Am., Inc.*, IPR2015-00677, Paper 15 at 18–19 (PTAB Sept. 2, 2015) (copyright notice not enough for public accessibility); *First Solar,* IPR2023-00827, Paper 13 at 18 (archive with no evidence of indexing); *Blue Calypso*, 815 F.3d at 1349-50 (no evidence of online viewing, downloading, indexing, or any

Pictiva EX2047
Samsung v Pictiva
IPR2026-00129

roadmap fatal to publication); *Acceleration Bay, LLC*, 908 F.3d at 773 ("[P]ublic accessibility requires more than technical accessibility.") (cleaned up).

Ms. Garland's declaration is of little help because it is not specific to Ma or the relevant time frame before filing of the '425 Patent and thus does not cure the hearsay issue. She, in particular, does not testify specifically that ***Ma*** was "made at or near the time" of the filing of the '425 Patent or that Ma specifically was kept in the ordinary course of business as a regular practice since then. Fed. R. Evid. 803(6). Indeed, there are significant reasons to doubt which, if any, version of Ma was recorded prior to the filing date of the '425 Patent. The lack of trustworthiness in Ma renders its self-proscribed dates unreliable.

The Board's position that "Ma itself indicates the website on which Ma abstract would have been available: 'www.elsevier.com/locate/synmet'" (citing Ex. 1007, 810) highlights the problem. First, it matters not whether Ma abstract was available because the entire Ma article, and not the abstract, is the basis for the Petition. Pet. 3-4 (citing Ma).

Second, it does not matter whether the November 2024 version of Ma, attached as Exhibit A to the Garland Declaration, has the web link, if it was never actually shown to be available prior to the filing date. We have no evidence of *when* this website link was added to Ma or when Ma itself was made publicly accessible.

Pictiva EX2047
Samsung v Pictiva
IPR2026-00129

Third, there is no evidence anywhere in the record that this purported website contained the "abstract" of Ma or the Ma article. The statement merely purports to be a link to the supposed Synthetic Metals journal website. It does not say what is on that website. And Ms. Garland does not testify to this. Moreover, an Internet Archive record of that specific website ***does not even exist in the critical time frame*** in 2008 and 2009:

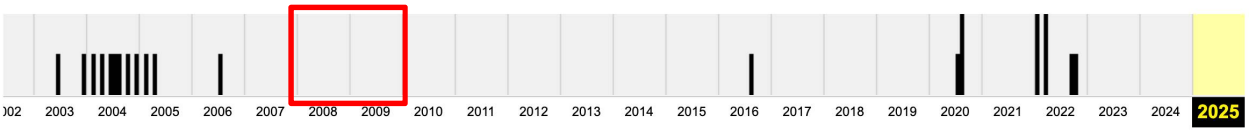

EX2029 (screen shot of web site at https://web.archive.org/web/20250000000000*/www.elsevier.com/locate/synmet) (last visited Feb. 12, 2025).

5. Whether Elsevier is a Publisher Says Nothing About Ma and the Only Evidence of Record Confirms Elsevier's "Publication" Practices Were Not Reliable

Petitioner argued that Ma should be presumed published because Elsevier is allegedly an "established" publisher and Ma was "peer-reviewed," citing only Ma (EX1010, 810) that says no such thing. Reply 1. Such "[a]ttorney argument is not evidence." *Elbit Sys. of Am., LLC v. Thales Visionix, Inc.*, 881 F.3d 1354, 1359 (Fed. Cir. 2018) (cleaned up). Nor does this clarify what Elsevier is an "established" publisher of and in what time frame. Just because Elsevier is a general publisher does not mean ***Ma*** was publicly available to interested ***skilled artisans*** before the

effective filing date.

B. A Skilled Artisan Would Not Have Combined Ma's Experimental Bphen-Dopant with Diekmann or Suzuki with a Reasonable Expectation of Success

Given the early stages of this research into Liq at the time of filing the ’425 Patent, a skilled artisan armed with only a bachelor’s degree in physics or chemistry and three years of experience would not have been motivated to and could not reasonably expect to just swap materials or dopants into an entirely different natured OLED with a reasonable expectation of success. EX2002, ¶¶86, 114, 116, 122; *see id.*, ¶¶69, 71, 78, 85. Such efforts would require significant experimentation and a large team of cross-disciplinary scientists with far more advanced experience to even begin to accomplish. *Id.*

The choice of which layers to use, the specific materials for each layer, the dopant and its concentration, if any, for each layer, the size of each layer, the layer order, and the choice of manufacturing processes (deposition, co-evaporation, temperature, and so forth) must be carefully calibrated to maintain that balance that still creates an operable OLED. EX2018, ¶11; EX2002, ¶¶123, 138; EX2021 (Yang 2024) at 1 (“optimizing excitons generation and minimizing their loss are essential” to OLED design and “necessitates precise control of polarons—the source of excitons—to ensure their efficient and balanced transport, injection, and confinement within the EML while mitigating their involvement in excitons loss

Pictiva EX2047
Samsung v Pictiva
IPR2026-00129

mechanisms"). Otherwise, there would be no "light emitting device" to qualify as the claimed OLED device that emits EM radiation. EX2002, ¶¶123, 138, 35-36.

And the complexity in using Liq as a dopant in an entirely new system—with all of Liq's problems—would not have been counterbalanced by any shown improvement over Diekmann and Suzuki's existing structure. A skilled artisan simply "would have lacked [a] motivation to combine the references and modify them" to use Liq as an ETL dopant in Diekmann and Suzuki. *Provisur Techs., Inc. v. Weber, Inc.,* No. 2021-1851, 2022 WL 17688071, at *5 (Fed. Cir. Dec. 15, 2022).

1. A Skilled Artisan Would Not Have Abandoned Diekmann's and Suzuki's Electron Donor Dopants for Liq's Electron Hopping Dopant

As Petitioner's expert agrees, Diekmann discloses that dopant 410 in the doped layer 402 (the alleged ETL) "acts as an electron donor" which "advantageously increases the injection of electrons from the cathode into the organic layer stack." Diekmann, 91; EX1003, ¶69 (citing Diekmann, 91). Of Diekmann's three preferred n-dopants—cesium, barium, and LiF—barium and LiF are specifically listed as electron injection materials. Diekmann, 5, 91 (preferred dopants act as "electron donors"). Petitioner's expert agrees cesium and barium are electron donors. EX2019-2024-04-24-Holmes at 63:17-64:1 ("an alkaline metal like cesium would be considered as an electron donor as a dopant."), 305:12-20 ("barium would likely also serve as an electron donor"). In the only doped-ETL example that

Pictiva EX2047
Samsung v Pictiva
IPR2026-00129

the Petition relies on for Suzuki—the one described in EX1019 and referenced by the Board (Paper 12 at 19-20)—the dopant is also cesium—an electron donor. EX1019, Fig. 1; EX2101, 1245 (Cs "acts as an efficient electron donor in organic films").

Yet in Ma, Liq neither reduces the injection barrier nor acts as an electron donor. EX2019_2025-04-24_Holmes, 291:16-292:11, 60:13-61:12, 47:12-18, 53:3-19, 58:20-59:6. Ma attributes BPhen:Liq's increased electron conductivity to "short hopping length for electron transport, compared to the pure BPhen." Ma, 813. Petitioner's expert testified that he "do[es]n't think [Liq]" reduces the injection barrier and explained Ma instead "intentionally includes a 1 nanometer Lithium fluoride electron injection layer under their cathode" for that purpose. EX2019_2025-04-24_Holmes, 291:16-292:11. Furthermore, when asked whether Liq is an electron donor, he also acknowledged that Ma's Liq "improve[es] the mobility of electrons in the transport material" but does not "explicitly teach[]" that "Liq might be a donor." *Id.* at 62:14-22, 63:11-13 ("[I]n Ma's explanation, it would be more on the mobility side than on any sort of carrier increase aspect"), 64:19-65:21 (Dr. Holmes would not conclude from Liq's use as an electron injection layer that Liq is an electron donor and would not characterize Liq as an electron donor). Dr. Pattison agrees. EX2018, ¶¶19-21.

Pictiva EX2047
Samsung v Pictiva
IPR2026-00129

Moreover, Liq would not have been regarded as a suitable molecular n-dopant for an electron-transporting material in OLEDs. According to Novaled, electron affinity of the organic material to be doped should be no more than 0.5eV above the ionization potential of a molecular n-dopant. *See* EX2100 at 10:56-64; EX2019_2025-04-24_Holmes, 50:8-10, 52:13-53:19; EX2018, ¶23. Typical OLED electron-transporting materials have an electron affinity of around 3.0 eV. EX2101 at 1244. But Liq's HOMO (which is approximately equal to the ionization potential) is around 5.6 eV (EX2022, https:/www.ossila.com/products/8-quinolinolato-lithium), more than 0.5 eV below the electron affinity of typical OLED ETL material. Thus, according to Novaled, Liq would not be a suitable molecular electron donor for an ETL.

A skilled artisan would not have used Liq to replace the preferred n-dopants because Liq was neither known to "act as an electron donor" nor was it known to "increase[] the injection of electrons from the cathode into the organic layer stack" when used as a dopant in ETL. *See* EX2019_2025-04-24_Holmes, 60:13-65:21, 291:16-292:11, 47:12-18, 53:3-19, 58:20-59:6. These are the two characteristics Diekmann describes for its n-dopants and that is consistent with Suzuki's example. EX2018, ¶¶24-25.

Because Liq was not known to have either characteristic, there is no evidence that a skilled artisan would have used Liq as the n-dopant in Diekmann or Suzuki.

Pictiva EX2047
Samsung v Pictiva
IPR2026-00129

Id. This is particularly the case given Petitioner's assertion that "[a] POSITA [allegedly] would have been motivated to include an n-doped electron transport layer ***to promote injection of electrons from the cathode and*** improve transportation of electrons to the light-emitting region." Pet. 25. Liq in Ma indisputably does not reduce the injection barrier when used as an ETL dopant and therefore does not promote electron injection from the cathode. EX2019_2025-04-24_Holmes, 291:16-292:11; EX2018, ¶26.

Nothing in literature suggests that at the time of the invention, a skilled artisan would have abandoned the disclosed electron-donor type n-dopants in Diekmann and Suzuki (e.g., cesium, barium, and LiF) that increase electron density, for Ma's Liq dopant that instead targets electron mobility because that would cause a change in the operating principles. EX2002, ¶11; EX2018, ¶27; EX2019_2025-04-24_Holmes, 60:13-65:21, 291:16-292:11, 47:12-18, 53:3-19, 58:20-59:6, 72:12-20; *In re Ratti*, 270 F.2d 810, 813 (CCPA 1959). A POSITA would be further deterred given the other significant issues with Liq at causing carrier imbalance, charge carrier traps, and quenching in PHOLEDs discussed below. EX2018, ¶28.

2. There is No Showing that Liq-Doping Would Have Led to Lower Diffusion or Higher Efficiencies

Dr. Holmes testified that the reasons for and the "probability of success" for doping Liq into the ETLs of Diekmann and Suzuki were: (1) "the reduced diffusion that would come with the molecular n-dopant [Liq]"; and (2) "potentially higher

Pictiva EX2047
Samsung v Pictiva
IPR2026-00129

efficiency and lower voltage." EX2019_2025-04-24_Holmes, 238:10-11 (discussing EX1003, ¶145), 240:1-241:4. But neither Petitioner nor its expert has presented any evidence on (1) how the diffusion in a Liq-doped OLED compares to OLED devices with cesium, barium, or LiF-doping (especially after both having been optimized); or (2) how their efficiency and driving voltages would compare. *Id.*, 139:10-141:22, 182:15-183:4. There is thus no evidence for this alleged reason to combine (reduced diffusion and potentially higher efficiency and lower driving voltages) with a reasonable expectation of success.

To illustrate, the Petition relies on Diekmann Figure 2A for many elements. Pet. 17-23. Petitioner's expert asserts that a skilled artisan would have interpreted the unlabeled layer between doped layer 402 and the emissive layer 401 that figure "as a blocking layer or an undoped electron transport layer." EX2019_2025-04-24_Holmes, 185:20-186:5; *see* EX1019, Fig. 1 (referenced by Suzuki, [0333]) (an undoped Bphen between Cs-doped Bphen and emissive layer); *see* EX2019_2025-04-24_Holmes, 29:7-14 (testifying that a blocking layer "typically included in a phosphorescent OLED allows the doped layer to be spaced from the emissive layer and reducing the concern related to dopant diffusion"). Yet Petitioner presents no evidence that with such a blocking layer, an OLED with Liq-doped ETL would have a lower metal/dopant diffusion than in Suzuki's or Diekmann's devices. *Id.*, 180:20-183:8.

Pictiva EX2047
Samsung v Pictiva
IPR2026-00129

Petitioner's expert only considered whether Liq's diffusivity would be lower than those of pure lithium, which is not one of the preferred n-dopants. *Id.* at 140:6-13. He did not examine diffusion resulting from dissociated lithium ion or atom, the effects of dopant concentration (Liq's doping concentration is 1-2 orders higher than p-dopant in Ma), or how the diffusion rate compares to LiF, Cs or Ba. *Id.*, 172:12-176:1, 178:8-183:8; *see also* EX2002, ¶¶79-81 (reasons why Cs, Ba and LiF have low diffusion constant); EX2023_Lee2008, 677 (LiQ more readily dissociated than LiF).

Indeed, there was no "direct comparison between Liq doped and [any] alternate doped electron transport materials in terms of performance." *Id.*, 141:1-5. Recent studies even show that doping an ETL with Liq can lead to lower EQE and higher driving voltages. *See* EX2007 at 2; EX2105, Fig. S1; EX2103, Fig. 2; EX2104, Fig. 4(a)-(b). Liq causes "low efficiency" through "obstruct[ing] … electron movement" due to charge carrier traps and "reduc[ing] carrier transport" because of its insulating properties with "a high dielectric constant" with EX2024_Kim2013 at 7999-8000; EX2025_Le2024 at 69636 (describing degradation due to unstable molecules, annihilation, instability of cations and anions, and traps as well as avoiding quenching); EX2003_Kim2011 at 54 ("low efficiency" of Liq); EX2006_Kang2022, Abstract, 6 (Liq doping could "retard[]" and "weaken" charge transport).

Pictiva EX2047
Samsung v Pictiva
IPR2026-00129

Setting aside the potential differences in material sets, Ma involves a single, undoped EML whereas Diekmann and Suzuki each involved multiple emissive layers with PHOLED emitter doped in a host system. EX1003, ¶¶104, 193; EX2019_2025-04-24_Holmes, 200:6-9 (white-light OLED implies multiple emissive layers); EX2018, ¶40. There is no evidence that Liq-doped ETL would have been suitable for Diekmann's or Suzuki's white OLEDs. EX2018, ¶¶41-42.

Ma—the only reference on ETL-doping with Liq—used Alq_3 as the single emitting material. *See* Ma, 811. In contrast, Diekmann and Suzuki used multiple host-guest systems to generate red/green/blue light for a white OLED (EX1003, ¶¶104, 193); and these different emissive layers would require different charge balance. EX2018, ¶41. Petitioner's expert did not present any evidence that a Liq-doped ETL could have led to an OLED that could properly balance the charges for all three layers, especially when there is no separate EIL is used. *Cf.*, EX2003_Kim2011 at 58 (5% Liq provides the best charge balance for device 1 and 65% for device 2); Ma, 813 (33 wt% provides the best charge balance); EX2024_Kim2013, Table 1 (Device with 5% Liq showed the highest luminance efficiency, power efficiency, EQE and lifetime); EX2018, ¶41 (unclear whether comprised range existed or how the resulting performance compared to OLEDs with Cs-, Ba- or LiF-based ETLs).

Pictiva EX2047
Samsung v Pictiva
IPR2026-00129

And there is no evidence that such balances could be obtained for the ETL materials (*e.g.*, Alq3, BAlq and TPBi) used by Diekmann and Suzuki.[2] EX2018, ¶42; EX2002, ¶83. Indeed, the only example of a "prior art" white OLED with a doped ETL in the record involved a molecular dopant that allegedly did not generate "alkali-metal." EX1029, 7. Liq could potentially generate Li metal. EX2019_2025-04-24_Holmes, 27:4-9. And Novaled's non-Liq OLEDs performed much better than Ma's devices. EX2018, ¶¶43-44. A POSITA, if desiring to improve Diekmann's or Suzuki's OLEDs, would have started with Novaled's non-lithium-generating n-dopant rather than Liq given the difference in performance. *Id.*; EX2020-2025-04-18-Holmes, 313:22-316:19.

3. There is No Evidence that Ma's Liq-Doped Bphen ETL had "Known Benefits" Applicable to Diekmann or Suzuki

Contrary to Petitioner's allegation, there were no "known benefits" of a "Liq-doped electron transport layer" to motivate a skilled artisan to use Liq as an ETL dopant in Diekmann or Suzuki. Pet. 37-38, 70. Notably, there was scarce literature on Liq-doped OLED at the time of the invention. Ma expressly states: "[n]o work has been reported about using Liq-doped BPhen as electron transport layer." Ma, 810. Petitioner's only evidence that there were "known" benefits for a Liq-doped

[2] Dr. Holmes is unsure whether Alq_3 and BAlq could confine the triplet energy level of the Ir-phosphors. EX2019, 21:10-24:15; EX2026_Tanaka2008 at 695 (Alq_3 and BAlq have lower T1 than $Ir(ppy)_3$).

Pictiva EX2047
Samsung v Pictiva
IPR2026-00129

electron transport layer is its expert, offered without explanation in a facially improper incorporation by reference. Pet. 37-38 (citing Ex.1003, ¶¶140-143), 70 (citing Ex.1003, ¶¶32-42, 225-228); CTPG at 35-36; 37 C.F.R. § 42.6(a)(3).

Yet Dr. Holmes concedes that Ma is his only cited reference showing Liq-doped ETL. EX2019-2025-04-24-Holmes, 238:2-9 (Ma the only cited reference for Liq-doped ETL). A single reference—and with no evidence of any citation to it before the critical date—does not suggest that it was "well-known" in any form or that Liq-doping an ETL would result in an OLED with a high level of efficiency. EX2002, ¶¶74-76. For its Suzuki grounds, Petitioner offers no additional explanation and merely refers to its Diekmann grounds without any specificity. Pet. 70. Based on this, Petitioner has not shown Suzuki-Ma renders obvious claims 2 or 17.

For Diekmann, Petitioner also relies on Ma's background statement that there was an "interest in developing OLEDs with high efficiency." Pet. 37 (quoting Ma, 810). But this says nothing about using Liq as a general ETL dopant or its benefits to efficiency in Diekmann (or Suzuki). EX2002, ¶¶67, 87. And Petitioner's reliance on Liu (EX1018) for Liq's "good electron injection and transport properties" is unexplained and lacks even a basic pin-cite. Pet. 37-38; 37 C.F.R. §§ 42.6(a)(3), 42.104(b)(5). This should be given no weight. But, even then, Liu was discussing using Liq as an electron ***injection*** layer, not an ETL dopant and, like Ma, also notes that Liq "has not yet been widely investigated." EX1018, Abstract, 211; Ma, 810;

Pictiva EX2047
Samsung v Pictiva
IPR2026-00129

EX2002, ¶77. At any rate, Dr. Holmes confirmed that in Ma, Liq-doping did not lower the injection barrier; and Liq itself is actually a poor electron transport material. EX2019_2025-04-24_Holmes, 291:16-292:11; EX2003, 57 ("poor electron transportation properties of the Liq"); EX2103, Abstract ("Liq is a relatively poor electron-transport material").

A skilled artisan would not have read Ma any farther than suggesting improved efficiency in an Alq_3-based fluorescent OLED with its specific material set. EX2002, ¶87. But this does not show that using Liq as an ETL dopant in Diekmann's or Suzuki's OLED stack would have been expected to result in high efficiency (or any efficiency) in an entirely different system. *Id.* And as explained above, the use of Liq did not always lead to improved efficiencies; and the purported benefit of reduced diffusion is speculative at best. EX2019_2025-04-24_Holmes, 139:10-141:5.

4. A Skilled Artisan Would Not Have Used Liq in the Claimed Ir-based PHOLED Due to Significant Quenching Problems

At the time of filing the '425 Patent, the research into using Liq in OLED devices was nascent and focused primarily on Liq as an injection layer material in ***fluorescent*** OLED stacks, not as an ETL dopant in PHOLED devices. EX2002, ¶¶117-118. Ma uses a fluorescent emitter (Alq_3), which involves a singlet excited state. *Id.*, 114. The use of Liq as a dopant remained almost exclusively on fluorescent

Pictiva EX2047
Samsung v Pictiva
IPR2026-00129

OLEDs until well after the filing date of the ’425 Patent. EX2005_Oh2015 at 34; EX2002, ¶119; EX2024_Kim 2013, Abstract (using Liq as a dopant in a PHOLED).

In contrast, the challenged claims are directed to an OLED that includes Ir-based emission layer. EX1001, cl. 1. Ir-based compounds are phosphorescent emitters whose emission involves a triplet excited state. EX2002, ¶114. The embodiments relied on by Petitioner in Suzuki and Diekmann all include at least one ***phosphorescent*** emitter. Pet. 26 ($Ir(ppy)_3$), 58; *see* EX1003, ¶¶31 (Iridium as a phosphorescent material), 38, 112 (“$Ir(ppy)_3$” is “phosphorescent dopant”), 196 (for “phosphorescent dopants,” “iridium compounds are the most preferable.”); Ex. 1014, 4. Ma has no phosphorescent, iridium-containing emission layer. EX2002, ¶120.

Liq has significant problems with PHOLEDs. In particular, “Liq dopant can act as a luminance quencher in phosphorescent organic light-emitting diodes (PHOLEDs) because of low triplet energy of Liq ….” EX2005_Oh 2015 at 34; EX2002, ¶¶38-39, 44, 106-107, 121; *see* EX2024_Kim 2013 at 1 (proposing using a triplet excitons blocking layer when using an ETL of TPBi doped with Liq in an phosphorescent system); EX2018, ¶¶47-51.

Specifically, Liq can generate free lithium when a cathode is deposited on it. EX2019_2025-04-24_Holmes, 27:4-9. A skilled artisan would also understand that small Li+ cation in Liq would dissociate from the quinolate unit and diffuse through

Pictiva EX2047
Samsung v Pictiva
IPR2026-00129

the organic layers to wreak havoc on the device. *See* EX2002, ¶82; EX2018, ¶¶49-50. Contemporaneous articles expressly stated that the "[b]inding energy between Li and quinolate unit is weaker than that of LiF." EX2023_Lee2008, 677. Indeed, Liq exists in multiple forms, including as $[Liq_2]^-[Li]^+$, from which the lithium cation is more easily disassociated and diffused. *Id.*; EX2027_Schmitz_2000, 3014; EX2018, ¶49. Petitioner's expert admits he did not analyze the disassociation of Liq or diffusion of Liq or Li+ or make any comparison to more common dopants like LiF, barium, or cesium. EX2019_2025-04-24_Holmes, 138:17-141:22, 65:1-5.

Liq, with dissociated lithium cation or atom, can interact with the triplet excitons, causing them to lose energy through non-radiative pathways instead of emitting light. EX2002, ¶121; EX2018, ¶50; EX2005_Oh2015 at 34. And phosphorescent OLEDs—including Iridium-based Ir(ppy)3 OLEDs—were known to be particularly susceptible to quenching problems. *See* EX2028_Reineke2007 at Abstract, 1-3, 7-8 (In contrast to fluorescent OLEDs, "phosphorescent OLED's suffer from a decrease of efficiency when the current density is increased," investigating triplet-polaron quenching in PHOLED devices, including $Ir(ppy)_3$-based OLEDs); *see* EX2021_Yang2024 at Abstract, 1 (discussing interfacial exciton-polaron quenching at the interface between emission and transport layers as significantly reducing OLED efficiency); EX2018, ¶51.

Pictiva EX2047
Samsung v Pictiva
IPR2026-00129

Triplet quenching is a concern in PHOLEDs but not in fluorescent OLEDs because a skilled artisan would want to remove "every possible loss in order to get that high efficiency" in PHOLEDs but fluorescent OLEDs were already "plagued by low efficiency" that one need not "consider these finer details." EX2020-2025-04-18_Holmes, 315:4-316:19; EX2018, ¶¶52-53; EX2002, ¶¶44, 106-107, 115, 121; EX2006_Oh2015 at 34-35. Thus, a POSITA would not have added Liq to an ETL in a PHOLED, especially when non-alkali-metal-containing dopants were known at the time and because diffusion in Cs-doped ETL was allegedly "already a solved issue at the time of the '425 work by He [EX1019] …." EX1029 at 7; EX2019_2025-04-24_Holmes, 28:21-29:14.

5. Ma Teaches Away from the Charge Imbalance the Combinations Would Cause

Maintaining a charge balance is such a foundational part of Ma that Ma expressly teaches away from causing charge imbalances. Ma, 814 ("good carrier balance" is "one of the most important factors in getting excellent performance in OLEDs"); *see id.* at 814. Abstract, 810 (emphasizing the need for maintaining "efficient charge balance in the emission zone"), 813 ("current efficiency" depends "on the carrier balance"), 814 (discussing "good balance" between electrons and holes with "efficient charge balance" in the emission layer); EX2002, ¶¶133-134. Petitioner and Dr. Holmes present no evidence on the relative hole and electron concentrations in Suzuki's and Diekmann's systems. Nor is there evidence that

Pictiva EX2047
Samsung v Pictiva
IPR2026-00129

doping with Liq would have improved the charge balance over Diekmann's and Suzuki's existing system.

Notably, Liq introduces traps for charge carriers (electrons or holes). Ex2018, ¶ 54. In PHOLEDs, charge balance is critical for efficient exciton formation and actual operation and such trapping exacerbates charge imbalances. EX2024_Kim2013 at 7999-8000 (recognizing in PHOLED that a "thick Liq layer" that "reduce[d] carrier transport because it has an insulating property with a high dielectric constant" and that Liq has "low electron transport[] properties" and "obstruct[s] … electrons movement by the existence of many shallow traps in the Liq molecules"); EX2025_Le2024 at 69636 (describing degradation due to unstable molecules, annihilation, instability of cations and anions, and traps as well as avoiding quenching). As a result Liq doping could "retard[]" and "weaken" charge transport. EX2006_Kang2022, Abstract, 6 (theorizing the formation of an ETL-Liq complex). The resulting charge imbalance due to an electron surplus and undesirable traps would have led to "dark spot[s], luminance decay[,] and subsequent low efficiency." EX2003_Kim 2011 at 54.

Tellingly, significant work continued well after the filing date in trying to determine the correct energy band levels to dope materials with Liq for an operable system even when just based on Bphen as in Ma. EX2003_Kim 2011, Abstract, 59 (testing multiple configurations of an ETL with doping concentrations of 5-65% of

Pictiva EX2047
Samsung v Pictiva
IPR2026-00129

Liq in Bphen, reporting efficiency points as low as 5% and as high as 65% depending on configuration); EX2002, ¶131. There is no evidence or explanation for how Liq would even be reasonably expected to work with the material sets in Diekmann or Suzuki, which would have different injection barriers and charge carrier mobilities than the Ma system. As further noted above, Diekmann and Suzuki include multiple emissive layers, which could have required different doping concentrations for charge balances. *E.g.*, EX2003, 59 (65% optimal range with a blocking layer for a red PHOLED); EX2024, Table 1 (optimal range below 10% with a blocking layer for a green PHOLED); EX2007 & EX2105 (*compare* Devices-2, 3 and 5). No evidence was presented that this delicate charge balance would be maintained if Liq-doped ETL is used in Diekmann's or Suzuki's multi-EML OLEDs. EX2018, ¶41.

6. Petitioner's Expectations of Success Are Conclusory

Designing an OLED stack is extremely challenging. Finding the right balance between electron injection and minimizing triplet exciton quenching and avoiding insulation and charge trapping all requires careful experimentation and device engineering. Here, Petitioner's expectation of success explanation is merely a conclusory statement that this would be "routine" with a "high probability of success." Pet. 38, 70 (citing EX1003, ¶¶145-146, 225-228). Such conclusory statements are legally insufficient and similar testimony should be given no weight. *In re Magnum Oil Tools Int'l, Ltd.*, 829 F.3d 1364, 1380 (Fed. Cir. 2016); *Xerox*

Pictiva EX2047
Samsung v Pictiva
IPR2026-00129

Corp. v. Bytemark, Inc., IPR2022-00624, Paper 12 at 5 (PTAB Feb. 10, 2023) (Director Review) (precedential) ("little weight" when expert merely "repeat[s], verbatim, Petitioner's conclusory arguments" without support). It also has no factual support. *See* Section IV.B.2 *supra*.

Petitioner has not shown a skilled artisan with only a bachelors in physics or chemistry and three years of experience could even attempt such a novel doping scheme in Diekmann's or Suzuki's PHOLED devices in an unnamed ETL material with an expectation of success. Significant experimentation from much more highly skilled artisans in cross-disciplinary fields would have been required to identify an appropriate host material and the amount of Liq dopant that would be expected to work with the claimed iridium-based PHOLED. EX2002, ¶¶85-86, 114, 116, 122, 69, 71, 78.

Whether Diekmann and Suzuki supposedly already contemplate an "n-doped electron transport layer" (Pet. 38, 70) does not say how or why a skilled artisan would reasonably expect success in ***Liq*** doping the ETL in a different (unknown) ETL host with a different transport mechanism (electron hopping) in Diekmann's or Suzuki's phosphorescent OLED systems. Petitioner's expert essentially parrots Petitioner's language. EX1003, ¶¶145, 227-228. There is no showing, for example, that doping TPBi (Diekmann's only ETL material compatible with PHOLEDs) with Liq could lead to lower diffusion or improved efficiency.

Pictiva EX2047
Samsung v Pictiva
IPR2026-00129

Petitioner's conclusory language is insufficient for a reasonable expectation of success. *TQ Delta, LLC v. Cisco Sys., Inc*., 942 F.3d 1352, 1359 (Fed. Cir. 2019) (quoting *In re Van Os*, 844 F.3d 1359, 1361– 62 (Fed. Cir. 2017)) ("[A] conclusory assertion with no explanation is inadequate to support a finding" of obviousness).

7. A Skilled Artisan Could Not Have Reasonably Expected Success in Doping an Unknown ETL Host with Liq

It is well settled that varying parameters to arrive at a combination is not enough to reasonably expect success. *In re Stepan*, 868 F.3d 1342, 1346-47 (Fed. Cir. 2017) ("[T]o have a reasonable expectation of success, one must be motivated to do more than merely to vary all parameters … until one possibly arrived at a successful result.") (cleaned up); *In re Kubin,* 561 F.3d 1351, 1359 (Fed. Cir. 2009) (improper to throw "metaphorical darts at a board filled with combinatorial prior art possibilities."). A reasonable expectation of success requires "[]sufficient guidance" from the asserted references. *Grunenthal GMBH v. Alkem Labs. Ltd.,* 919 F.3d 1333, 1343 (Fed. Cir. 2019). Petitioner's ground and Ma do not come close to this threshold.

The delicate and complicated nature of the relationship between the stacks (emitter materials, host materials, charge imbalance, and quenching concerns) and documented problems with Liq in the ETL and PHOLEDs generally, means that a skilled artisan would not have reasonably expected success in combining Ma's Liq-doped Bphen in an Alq3 fluorescent system with Diekmann or Suzuki's Iridium-

Pictiva EX2047
Samsung v Pictiva
IPR2026-00129

based emitter in a phosphorescent system with different stacks. EX2018, ¶58. The complexity is further increased because Diekmman and Suzuki involved multiple emission layers; and it is unclear whether there could be a suitable Liq doping range and ETL/blocking layer thickness for these white OLEDs. *Id.*, ¶57

Doping of organic semiconductors was and still is unpredictable, especially when it comes to doping with Liq. EX2002, ¶¶103, 71, 113, 124; EX2018, ¶¶34-37, 61. Years after the filing of the '425 Patent, "the reason for the enhanced electron transport property" of Liq in Bphen and Alq_3 and why such high doping (around 30%) concentrations were needed of Liq still "was not well understood." EX2004_ Kumar_2011 at 114511-1-2 ("[N]-type doping of organic semiconductors still remain[ed] a challenge"); EX2002, ¶119. Researchers, over a decade later, were still trying to figure out just how Liq works. EX2006_Kang2022, Abstract, 1 (investigating the "effect of coordinated structures of electron transporting materials (ETMs) with lithium quinolate (Liq) on charge transport characteristics."); EX2018, ¶62; *see also* EX2007, EX2103-EX2105 (investigating Liq-doped ETL). Given this deep lack of understanding, Petitioner has not shown a reasonable expectation of success from a bachelors in chemistry or physics with only three years of experience at the time of filing of the '425 Patent. EX2018, ¶62.

To illustrate, Petitioner identifies no particular host material for either the ETL in Diekmann or Suzuki. This makes it impossible to determine if the doping method

Pictiva EX2047
Samsung v Pictiva
IPR2026-00129

is even compatible with the ETL host. EX2018, ¶¶63-64. The choice of dopant, the amount of dopant, and the method of doping must also be tailed to the choice of ETL host. *Id.* And that host and dopant combination also needs to be chosen so at to be compatible with the overall system, in this case a phosphorescent, iridium-based OLED device. *Id.* This leads to significant experimentation in finding compatible materials that maintain the correct energy level balance, avoid quenching and polaron-exciton annihilation, and do not trap charge carriers, among other problems. *See* Sections IV.B.4-IV.B.5, *supra.*

In addition, Petitioner has not explained how it would even begin to deal with the quenching and charge imbalance problems caused by Liq. While other references attempted to quell cesium diffusion using an additional undoped Bphen layer (*See* EX1019 (He), Fig. 1), Petitioner has neither proposed such a modification nor provided any explanation of how thick of an undoped layer would be sufficient, how the increased thickness would affect the optical performance, what the appropriate material would, or how that material would alter the charge balance and driving voltage of the overall system. EX2018, ¶65.

Ma did not propose any such blocking layer. The previously discussed weak binding energy in Liq and multiple forms of Liq that would include lithium cations (or even lithium atoms) that can more easily diffuse into the emission layer than the heavier Cs atom in He. *See* Sections IV.B.2-IV.B.3. Indeed, a POSITA would

Pictiva EX2047
Samsung v Pictiva
IPR2026-00129

gravitate away from Bphen because of BPhen's known low T_g "which causes issues related to device lifetimes." EX2004, 114511-2.

Simply put, no skilled artisan with only a bachelors and three years of experience would have reasonably expected Ma's extreme doping to work in Diekmann or Suzuki's phosphorescent system. EX2018, ¶66.

V. DIEKMANN AND SUZUKI HAVE NO NEED FOR LEE'S ENCAPSULATION (CLAIM 4)

A. Neither Diekmann Nor Suzuki Need Any Further Encapsulation

Petitioner repeatedly admits, Diekmann and Suzuki already had encapsulation layers. Pet. 11-12, 21, 26-27, 31, 35, 38-39, 41, 54-55, 58-60, 63-65, 68-69, 71-72. Petitioner provides no reason for a skilled artisan to go through with the complex redesign to utilize Lee's encapsulation.

Petitioner points to Lee's statements about protecting cathodes from air and the "multi-layer" encapsulation in Lee as decoupling the adjacent "inorganic layers" to prevent "defects" and "block water and oxygen permeation into the OLED." Pet. 40 (citing Lee, [0005], [0020]). For Suzuki, Petitioner ostensibly points back to

Pictiva EX2047
Samsung v Pictiva
IPR2026-00129

protection from "outside materials … for the same reasons discussed above in §VIII.C.1." Pet. 71.[3]

Yet Diekmann and Suzuki already encapsulate their OLED devices for these same reasons and thus have no need for further encapsulation. *See Kinetic Concepts, Inc. v. Smith & Nephew, Inc.,* 688 F.3d 1342, 1369 (Fed. Cir. 2012); *see* Diekmann at 30-31, 94, 109, 120, Figs. 2A (thin film encapsulation 6), 3, 17A; Suzuki, [0004] (describing problem of permeation), [0067] (addressing that problem with "barrier film … has a high density and low gas and moisture vapor permeability"), [0115] ("silicon oxide is particularly preferable from the perspective of moisture permeability, light permeability"). Petitioner's general statement regarding protection from outside materials and blocking water and oxygen permeation are not tailored to Lee's specific form of encapsulation, why it would be better than Diekmann's or Suzuki's existing encapsulation, or what would actually motivate a skilled artisan to use Lee's complicated annealing method over Diekmann's or Suzuki's encapsulation.

B. Petitioner's Alleged Motivations Point to the Wrong Layers

[3] Petitioner refers broadly to the entire eight-page of analysis for claim 4 in the Diekmann ground. This too is an improper incorporation by reference and woefully nonspecific. 37 C.F.R. §§ 42.6(a)(3), 42.104(b)(5); CTPG at 35-36.

Pictiva EX2047
Samsung v Pictiva
IPR2026-00129

Petitioner alleges encapsulation generally was "well-known." Pet. 40-41, 71-72. This is not a motivation to combine. *See Virtek Vision Int'l ULC v. Assembly Guidance Sys.*, 97 F.4th 882, 887–88. Specifically, Petitioner does not explain why a skilled artisan would use Lee's specific encapsulation approach. Petitioner's related blanket citation to the entirety of Exhibits 1020 and 1021 are not explained and should be given no weight. 37 C.F.R. § 42.104(b)(5).

As for Lee's claim of "improved lifetime" (Pet. 40, 71) from annealing its semi-crystalline, parylene-based polymer barrier, this improved lifetime was "compared to prior OLEDs having polyacrylate or amorphous parylene ***barrier*** layers," as Petitioner admits. Pet. 40 (citing Lee, [0020]) (emphasis added). Neither Diekmann nor Suzuki use polyacrylate or amorphous parlyene ***barrier*** layers.

To illustrate, Petitioner points to Diekmann's "intermediate polymer layers," labelling this "the precise prior art structure that Lee's encapsulation is intended to improve upon." Pet. 40 (citing Diekmann, 15; Lee, [0008]). Petitioner points to the wrong layer. Diekmann's intermediate layer is a single ***buffer*** layer, sandwiched between the Diekmann's two barrier layers as part of "thin film encapsulation 6." Diekmann, 15, 94, Fig. 3. Diekmann's two barrier layers are not made of polyacrylate or parylene, but are silicon oxide and silicon nitride layers, as Petitioner admits and relies on elsewhere. Pet. 21, 26-27 (citing Diekmann, 94, Fig. 3). Petitioner has provided no explanation for how Lee's annealing of parylene-based

Pictiva EX2047
Samsung v Pictiva
IPR2026-00129

polymer barriers would improve the lifetime of Diekmann's device with its non-parylene-based barrier layers of silicon oxide and silicon nitride.

Petitioner has not suggested replacing one of the silicon oxide or silicon nitride layers with the parylene layer. That argument is waived. But, even then, Petitioner has not explained why a skilled artisan would do so or that the resulting structure would have good interlayer adhesions and compatibility to provide the required reliability. Nor has Petitioner explained whether in the resulting structure, the annealed parylene would have a different amorphicity than silicon oxide or silicon nitride to satisfy the claimed requirement that "the volume structure of the second encapsulation layer has a higher amorphicity than the volume structure of the first encapsulation layer" in claim 4.

Petitioner's Suzuki ground is even more threadbare. For claim 1, Petitioner relied on Suzuki's "gas barrier thin film laminate 9" comprising "buffer film 3," "a barrier film 4," and another "buffer film 3" (Pet 54 (citing Suzuki, Fig. 9, [0273]-[0274]). As Petitioner recognizes, barrier film 4 is a "dense intervening layer" with "low water vapor transmission" comprising "a ceramic composition with low or no carbon content and having at least Si and O atoms." Pet. 59 (citing Suzuki, [0117]); *see* Pet. 59-60 (citing Suzuki, [0068]-[0069]) (alleging barrier and buffer films are made of silicon oxide, silicon oxide nitride, or silicon nitride). This is not

Pictiva EX2047
Samsung v Pictiva
IPR2026-00129

polyacrylate or parylene. Petitioner has not identified any motivation to use Lee's annealing of parylene-based polymer barriers.

Nor does it identify a specific barrier layer in Suzuki to implement Lee or explains how Lee would improve Suzuki's lifetime. *See* Pet. 71. Instead, Petitioner refers back to its Diekmann analysis with little explanation. *Id.* (alleging motivation "to protect the OLED from outside materials and improve the lifetime of the device for the same reasons discussed above in §VIII.C.1 with regards to Diekmann."). That is legally insufficient.

C. Petitioner's Expectations of Success are Conclusory

Petitioner's expectations of success are also conclusory. First, Petitioner provides only unsupported attorney argument for its alleged expectation of success for Diekmann and Suzuki "already contemplating" encapsulation and its "mere replace[ment]" theory. Pet. 41, 71-72 (no cited support beyond Petitioner's expert parroting identical language in EX1003, ¶¶151, 233). Mere replacement is not a reason for why a skilled artisan would reasonably expect success using Lee's encapsulation.[4]

[4] Petitioner has neither alleged "mere replacement" as a motivation nor has established the prerequisite for a "simple substitution" motivation, including that the

Pictiva EX2047
Samsung v Pictiva
IPR2026-00129

For instance, Lee does not mention an n-doped OLED; and Dr. Holmes never examined the annealing conditions suitable for Suzuki and Diekmann, the temperature profiles across the OLEDs during annealing, or even which paralyne one would use for Diekmann and Suzuki. EX2019_2025-04-24_Holmes, 118:6-11, 120:10-125:10. "[T]o have a reasonable expectation of success, one must be motivated to do more than merely to vary all parameters or try each of numerous possible choices until one possibly arrived at a successful result." *Stepan*, 868 F.3d at 1347. Nor does Dr. Holmes consider whether heat applied during annealing would have accelerated diffusion, a real concern with an n-doped PHOLED. EX2018, ¶81.

That thin film encapsulations with alternating organic and inorganic layers was "well-known" also says nothing about expected success using the specific encapsulation in Lee. Increasing the crystallinity of one of the encapsulation layers will only make the encapsulation more brittle. EX2018, ¶82. Again, Petitioner's blanket citation to the entirety of Exhibits 1020 and 1021 are not explained and should be given no weight. 37 C.F.R. § 42.104(b)(5). And neither exhibit used Lee's encapsulation. EX1020-EX1021.

---

substitution be "simple," the elements "known," and the results be "predictable." *See* MPEP 2143.

Pictiva EX2047
Samsung v Pictiva
IPR2026-00129

Petitioner closes with a statement that this modification was within the ability of a skilled artisan. Pet. 41, 72. This conclusory and unexplained statement is, again, legally insufficient. *See, e.g.*, *Samsung Electronics Co., Ltd. v. LED Wafer Solutions, LLC*, IPR2021-01491, Paper 9 at 12 (PTAB Mar. 15, 2022). Petitioner's cited expert testimony just parrots the same line. *See* EX1003, ¶¶151, 233. This is not helpful expert testimony. *See* 37 C.F.R. § 42.65(a).

Tellingly, Petitioner's expert could not even identify any appropriate parylene system, the annealing temperature, or temperature profile across the encapsulation layer and OLED during annealing. EX2019_2025-04-24_Holmes, 118:6-11, 120:10-125:10. Lee gives no such guidance or even a starting point for its annealed, parylene barrier system. EX2018, ¶84. Varying numerous parameters to arrive at a combination is not obviousness. *Stepan*, 868 F.3d at 1347.

VI. PETITIONER HAS NOT OFFERED A SUFFICIENT MOTIVATION OR EXPECTATION OF SUCCESS TO ADD TOUCH-SENSITIVE ELEMENTS (CLAIMS 9-11)

The Board has not made any preliminary evaluation of the Diekmann-Koshihara touch-sensitive-elements ground. Instead, the Board focused on Suzuki-Caldwell applied to Claim 9 as the sole basis for institution. Paper 12 at 12-26. Yet, in both cases, Petitioner has not provided a substantive motivation or expectation of success to support its Diekmann-Koshihara and Suzuki-Caldwell combinations on touch-sensitive elements against claims 9 to 11. Pet. 43-45, 74.

Pictiva EX2047
Samsung v Pictiva
IPR2026-00129

A. Whether Touch Sensors Are "Well Known" is Not a Motivation

The Board was correct not to rely on Petitioner's first rationale that touch sensitive elements were "well-known." Pet. 45, 74. Whether something is "well known" is not a motivation. *See Virtek Vision*, 97 F.4th at 887–88. Moreover, the mere existence of the prior art, no matter how obscure, is not evidence that the elements were well known.

B. The Cost-Savings and Thinner Profile Rationales Are Irrelevant

In institution, the Board also properly did not find the cost-savings and thinner-profile rationales persuasive because they do not apply to devices *without an existing touch sensor.* Pet. 45, 74 (citing Caldwell, [0006]-0007], EX1011 at 3:2-7). All of these purported cost savings and thinner profiles are for a "separate[]" touch sensor." Caldwell, [0006] ("***a separately constructed touch sensor*** involves extra material and other manufacturing costs."), [0007] (reducing the "cost and complexity" by reducing "the extra material and manufacturing costs associated with ***the separate touch sensor*** and lighting assemblies."); EX1024 at 1:29-33 ("[T]he touch screen is ***made separately***"), 1:44-46 ("[T]he additional step of integrating the [separate] components raises manufacturing costs for the complete device."), 3:2-7 (integration of touch sensor directly into OLED "reduces … costs" and "size").

Petitioner's expert admits that these references are merely describing the "benefits" from "integrating" an existing "touch sensor directly into [the] OLED"

Pictiva EX2047
Samsung v Pictiva
IPR2026-00129

instead of using a "separate touch sensor device." EX1003, ¶¶242, 166. Neither Diekmann nor Suzuki have existing, separate touch-sensitive elements. ***Adding*** a touch sensitive element onto of the OLED without a touch sensor would only ***increase*** thickness (adding layers) and cost (adding components and redesigning for added traces and controllers).

C. Caldwell Does Not Teach Any General Benefit to Justify Using Touch Sensors

The Board did not adopt any of Petitioner's express reasons-to-combine, but turned to Caldwell as its sole support for a motivation. Paper 12 at 23. The Board should not have fixed the Petition in this manner and should have held Petitioner to its Petition.

First, whether "Caldwell specifically teaches 'integration of touch sensors with light emitting devices'" does not provide a motivation. Paper 12 at 23 (citing Ex. 1011 ¶7; Pet. 16). This is just a reference to integrating an existing, separate touch sensor into the display, and says nothing about ***adding*** a touch sensor where there is no such sensor as in Diekmann or Suzuki. *See* Section VI.B, *supra*. Next, the Board found that Caldwell teaches that "the combination of touch sensors and light emitting devices integrated into one device was already known to be desirable." *Id.* Respectfully, Caldwell says no such thing. The fact that Caldwell has a touch sensor does not say why anyone would modify Diekmann or Suzuki with Caldwell. There is no support in the record for the general desirability of touch sensors in all

Pictiva EX2047
Samsung v Pictiva
IPR2026-00129

light emitting devices—the only benefits described—including in the Board's quotations—are to integrate an existing, separate touch sensor into the display. Nothing in Caldwell (or Koshihara) suggests a touch sensor generally would be desirable in the OLED devices of Suzuki or Diekmann.

D. Diekmann Has No Need for Koshihara's Touch Sensors

For the Diekmann-Koshihara ground, the Board was also correct to not rely on Diekmann's user control (*i.e.*, on/off, brightness, color) and sensors, none of which are touch sensing. Pet. 44-45 (citing Diekmann, 45-50, 53, 64, 70, 137-140, 142-143). Diekmann's existing user controls do not explain why a skilled artisan would ***add*** touch-sensitive operating elements in addition to Diekmann's existing controls. On the contrary, Diekmann's existing user control means that Diekmann has no need of additional controls. *See Kinetic Concepts*, 688 F.3d at 1369.

While Petitioner contends that Koshihara allows a user to "manually input instructions," this is conclusory. Pet. 45 (citing Koshihara at 4; EX1003, ¶¶165-166). Diekmann can already manually input instructions with its existing user control. *See Kinetic Concepts*, 688 F.3d at 1369. Moreover, according to Dr. Holmes, the Diekmann device he relies on "is a white lighting device." EX2019_2025-04-24_Holmes, 192:9-13. Dr. Holmes does not explain why touch sensors are needed for a white lighting device.

Pictiva EX2047
Samsung v Pictiva
IPR2026-00129

And if Petitioner suggests that Koshihara's touch sensor integrated with the sealing substrate would "prevent oxidation" of the light emitting layer (Pet. 45), this says nothing about why a skilled artisan would add touch sensors and, even then, Diekmann already prevents oxidation by surrounding its light emitting layer with a protective encapsulation and substrate, as Petitioner relies on elsewhere. *See* Pet. 21-22 (citing Diekmann, 91-92, 94 & Fig. 2A (encapsulation 6 and substrate 1)). Petitioner provides no reason to complicate Diekmann further.

E. Petitioner's Expectation of Success Are Legally Insufficient

The Board, in institution, preliminary found that Petitioner's expert "brief[ly]" stated that "touch sensors were well known" and integration with Suzuki would be "routine." Paper 12 at 24-25. "[B]rief[ly]" is understating the lack of support for an expectation of success. Petitioner's expectations of success are just conclusory statements of "expected success" and "routine" implementation." Pet. 45, 74. Neither explains *why* a skilled artisan would expect success or that they even possess the actual ability to add gesture control as claimed to Diekmann or Suzuki with only degrees in chemistry and physics and not a relevant discipline like electrical engineering or computer engineering.

Moreover, Petitioner's expert essentially parrots the petition and merely reiterates its flawed arguments about "well known" touch sensors and Diekmann's existing non-touch sensors. EX1003, ¶¶167, 243. Such conclusory and unsupported

Pictiva EX2047
Samsung v Pictiva
IPR2026-00129

statements cannot support obviousness. *See TQ Delta*, 942 F.3d at 1358 ("Conclusory expert testimony does not qualify as substantial evidence."); *Xerox Corp. v. Bytemark, Inc*., IPR2022-00624, 2022 WL 3648989, at *6 (PTAB Aug. 24, 2022) (Such "conclusory and unsupported" opinions that lack any genuine "supporting evidence" or "technical reasoning" are "entitled to little weight."); 37 C.F.R. § 42.104(b)(5); *Johns Manville Corp. v. Knauf Insulation, Inc.*, IPR2018-00827, Paper 9 at 13-14 (PTAB Oct. 16, 2018) (informative).

Tellingly, neither the Petition nor the cited testimony addresses just how or why a skilled artisan would expect success in integrating Caldwell's touch sensor into Suzuki or Diekmann specifically. Vague notions of "routine" do not do justice to the complicated nature of OLED design. And the mere fact that Caldwell depicts a touch sensor (Ex. 1011, ¶74) does not explain the likelihood of success in combination that touch sensor with Suzuki or Diekmann. Otherwise, all prior art provides an expectation of success just by existing. That is not the law.

The situation here is distinguishable from *Keynetik, Inc. v. Samsung Elecs. Co.*, No. 2022-1127, 2023 WL 2003932, at *2 (Fed. Cir. Feb. 15, 2023) ("While Dr. Abowd's testimony is brief, in the absence of any contradictory evidence, it constitutes substantial evidence to support the Board's finding" of a reasonable expectation of success). There, the expert testified not only that the modification need would be "straightforward" and "simple" for a skilled artisan, but he also

Pictiva EX2047
Samsung v Pictiva
IPR2026-00129

"described the function those modifications would need to achieve" and how the device "would be modified." *Id.* The dispute was over whether there needed to be even more detail about the actual software code. *Id.* Because writing code with a known function was within the skill in the art, the Court affirmed the reasonable expectation of success finding. Petitioner's expert here did not provide the modifications or the method of modification to support its reasonable expectation of success. *See Xerox Corp. v. Bytemark, Inc.*, IPR2022-00624, Paper 9 at 15 (precedential); 37 C.F.R. § 42.65(a). Indeed, he only provided conclusory and improperly incorporated testimony, parroting the Petition. This testimony is not helpful and should be given no weight. CTPG at 35-36; 37 C.F.R. § 42.6(a)(3); *Cisco Sys., Inc. v. C-Cation Technologies, LLC,* IPR2014-00454, Paper 12 at 9-10 (PTAB Aug. 29, 2014) (informative); 37 C.F.R. § 42.104(b)(5).

VII. GESTURE CONTROL WOULD NOT HAVE BEEN OBVIOUS (CLAIM 12)

A. Diekmann or Suzuki's OLED "Device" is Not "Drivable By" Harada's Hand Gesture

Claim 12 specifies that "the device is drivable by means of a gesture control." Petitioner has not shown that the OLED "device" is "drivable by" gesture control. As a preliminary matter, to the extent that Dr. Holmes is relying on solid state white lighting devices (*see* EX2019, 192:6-13), it is unclear why a skilled artisan would have wanted to drive them through gesture control. Nevertheless, Petitioner has also

Pictiva EX2047
Samsung v Pictiva
IPR2026-00129

not shown that the OLED "device" is "drivable by" gesture control. The '425 Patent's "device" driven by gesture control in claim 12 is the device comprising the OLED device in claim 1. '425 Patent at 87:61-62 ("1. A device comprising: an organic light-emitting diode comprising: …"). The '425 Patent describes its gesture control as generating commands that control the OLED, to affect the device's operating states. '425 Patent at 18:36-37 ("A switch-on, switch-off or other changes of operating states can then be effected by means of gesture control."). Yet Petitioner never explains how Harada's gesture recognition drives the OLED device. Petitioner's analysis of Harada's "gesture recognition" (Pet. 49-50, 77) describes recognizing a hand shape or movement (Harada, [0071]) and then providing a command to a "personal computer." *Id.*, [0073]. Acting effectively as a keyboard or mouse input to a separate personal computer is not driving a device comprising the OLED as required by claim 12.

B. Petitioner Does Not Explain What "More Natural Ways" Means or How and Why it Applies to Diekmann or Suzuki

Petitioner states that Harada's gesture control allows the user "to operate the device 'in more natural ways.'" Pet. 51, 77; Harada, [0073]. Petitioner provides no explanation for what "more natural ways" means or even a basis for comparison with Diekmann or Suzuki. The cited paragraph in Harada is not referring to operating the device comprising an OLED "in more natural ways," but controlling a separate

Pictiva EX2047
Samsung v Pictiva
IPR2026-00129

"personal computer apparatus" by "changing a command" using image recognition.

Harada, [0073] ("zoom in" instruction sent to a computer).

Pictiva EX2047
Samsung v Pictiva
IPR2026-00129

C. Diekmann Has No Need for Additional User Controls

For Petitioner's Diekmann ground, Petitioner relies on Diekmann's existing user control (*i.e.*, on/off, brightness, color) and sensors (*i.e.*, photodiodes or photodetectors for brightness). Pet. 50-51 (citing Diekmann, 45-50, 53, 64, 70, 137-140, 142-143). But that does not explain why a skilled artisan would add the gesture control in Harada to Diekmann. The photodetector, photodiodes, and sensors in Diekmann are for detecting the brightness and color of the neighboring organic layer stack and ambient light or body functions, not user control or user operation. Diekmann, 45-50, 53, 64, 70, 137-140, 142-143. Diekmann already has robust user controls and automated brightness sensors—as evidenced by the 15 pages of Diekmann Petitioner cites for these features—suggesting that there was no need for further, complicated gesture-based mechanisms. *Kinetic Concepts*, 688 F.3d at 1369. Nor has Petitioner explained or suggested that these existing functions—on/off, brightness, color—would or could be operated by gesture control.

D. For Suzuki, Whether Gesture Control "Can" Be Applied to OLEDs or Was "Well Known" is Not a Motivation to Combine

For Suzuki, Petitioner relies on Harada supposedly teaching that gesture control "can be applied to OLEDs." Pet. 77 (citing Harada, [0003].). But whether Harada "could" be combined is not evidence that a skilled artisan "would" combine Suzuki with Harada. *See Personal Web Techs., LLC v. Apple, Inc.*, 848 F.3d 987, 993-94 (Fed. Cir. 2017).

Pictiva EX2047
Samsung v Pictiva
IPR2026-00129

Petitioner relies on bare allegations that gesture control was "well known." Pet. 78 (improperly incorporating the entirety of Section VIII.E.). The cited portion of the expert testimony (Ex.1003, ¶¶177-178) is improperly incorporated by reference without explanation. But, even then, merely relies on a blanket citation to Harada and EX1032, without explanation. This should be given no weight. The mere existence of Harada is neither a motivation to combine nor evidence something is "well known." And whether something is "well known" is legally not a motivation anyway. *See Virtek Vision*, 97 F.4th at 887–88.

E. Petitioner's Expectations of Success Are Conclusory

Petitioner's expectations of success are all conclusory, again labeling gesture control "well-known" in the art and "routine." Pet. 51, 77-78. Neither explains *why* a skilled artisan would expect success or that they even possess the actual ability to add gesture control as claimed to Diekmann or Suzuki with only degrees in chemistry and physics and not a relevant discipline like electrical engineering or computer engineering. And, even then, Petitioner's expert merely parrots the petition, which is unhelpful. EX1003, ¶178; *Xerox*, IPR2022-00624, Paper 9 at 15 (precedential); 37 C.F.R. § 42.65(a).

Petitioner and its expert only provide a blanket citation to EX1032 and Harada to contend that gesture control with OLED's was well known. This is also violation both 37 C.F.R. §§ 42.6(a)(3) and 42.104(b)(5) and should be given "no weight."

Pictiva EX2047
Samsung v Pictiva
IPR2026-00129

Johns Manville Corp. v. Knauf Insulation, Inc., IPR2018-00827, Paper 9 at 13-14 (PTAB Oct. 16, 2018) (conclusory "assertion[s] that it would have been so" and "unsupported statement[s]" that the combinations are "within the skill" of a skilled artisan and "well-known and predictable" do not meet Petitioner's burden); *see Hulu, LLC v. Sound View Innovations, LLC*, IPR2018-00582, Paper 34 at 28-30 (PTAB Aug. 5, 2019) (informative). Exhibit 1032 (Freeman) does not show any well-known gesture control of an OLED—Freeman makes no mention of OLED devices. And Harada is not evidence of well-known. Otherwise, every prior art reference would be self-enabling for reasonable expectation of success.

VIII. UNDER SAMSUNG'S INTERPRETATION, THE PRIOR ART HAS NOT BEEN SHOWN TO TEACH GESTURE CONTROL OR TOUCH SENSORS THAT ARE PART OF THE OLED DEVICES

In the district court, Samsung has argued that it does not infringe the gesture control and touch sensor claims because those controls and sensors are part of the display panel and not the OLED devices. EX2030, ¶305. But there is no evidence here that the touch sensors and gesture controls are integrated into the OLED device instead of a larger display. Under that standard, there is no showing that either reference meets this limitation as the touch sensors and gesture controls relied on by Petitioner are external to the OLED stack.

Pictiva EX2047
Samsung v Pictiva
IPR2026-00129

IX. UNDER SAMSUNG'S INTERPRETATION, THE PRIOR ART HAS NOT BEEN SHOWN TO DISCLOSE "GENERAT[ING] ELECTROMAGNETIC RADIATION IN A SPECTRAL RANGE FROM INFRARED TO UV RADIATION DURING OPERATION"

Claims 1, 2 and 17 all require "at least one radiation-emitting region configured to generate *electromagnetic radiation* in a spectral range from infrared radiation to UV radiation during operation." Samsung asserts that RGB OLEDs do not meet this limitation "as the only colors emitted are blue, green, and red" and "[t]here is no wavelength spectrum from UV to IR in the display panel." EX2030, ¶289.

But there is no evidence here the multiple emissive layers in Diekmann and Suzuki (red, green, blue) collectively cover the entire spectrum from infrared (which Samsung's non-infringement expert asserts starts at around 780nm) to UV (which allegedly starts at around 400 nm). *Id*., ¶¶286-288. Under that standard, there is no showing that the references meet this limitation.

X. CONCLUSION

The challenged claims have not been shown to be unpatentable.

Dated: May 5, 2025

Respectfully submitted,

By:*/Hong Zhong/*
H. Annita Zhong. (Reg. No. 66,530) (lead)

Pictiva EX2047
Samsung v Pictiva
IPR2026-00129

IRELL & MANELLA LLP
1800 Avenue of the Stars, Suite 900
Los Angeles, CA 90067
Tel: (310) 277-1010
Fax: (310) 203-7199
Email: hzhong@irell.com

Philip Warrick (Reg. No. 54,707)
Blair A. Silver (Reg. No. 68,003)
IRELL & MANELLA LLP
750 17th Street NW, Ste. 850
Washington, DC 20006
Tel.: (202) 777-6500
E-mail: pwarrick@irell.com
E-mail: bsilver@irell.com

Pictiva EX2047
Samsung v Pictiva
IPR2026-00129

CERTIFICATE OF WORD COUNT

I hereby certify, pursuant to 37 C.F.R. § 42.24, that the foregoing Patent Owner's Response contains 13,939 words, excluding the words in the table of contents, table of authorities, this certificate of word count, certificate of service or exhibit list. The word count is based on the word count of the Microsoft Word program used to prepare the Patent Owner's Response.

/Susan M. Langworthy/
Susan M. Langworthy

Pictiva EX2047
Samsung v Pictiva
IPR2026-00129

CERTIFICATE OF SERVICE

I hereby certify, pursuant to 37 C.F.R. § 42.6, that on May 5, 2025, a complete copy of the **PATENT OWNER'S RESPONSE** and **EX2018-EX2030,** and **EX2100-EX2105** were served upon the following, by ELECTRONIC MAIL:

Scott C. Weidenfeller, sweidenfeller@cov.com,

David A. Garr, dgarr@cov.com

SDC-Pictiva-IPR@cov.com

/*Susan M. Langworthy*/
Susan M. Langworthy

Pictiva EX2047
Samsung v Pictiva
IPR2026-00129