Trials@uspto.gov
571-272-7822

Paper 54
Date: February 9, 2026

UNITED STATES PATENT AND TRADEMARK OFFICE

BEFORE THE PATENT TRIAL AND APPEAL BOARD

SAMSUNG DISPLAY CO., LTD.,
Petitioner,

v.

PICTIVA DISPLAYS INTERNATIONAL LTD.,
Patent Owner.

IPR2024-01095
Patent 11,828,425 B2

Before GRACE KARAFFA OBERMANN, GARTH D. BAER, and JASON M. REPKO, *Administrative Patent Judges*.

BAER, *Administrative Patent Judge*.

JUDGMENT
Final Written Decision
Determining All Challenged Claims Unpatentable
35 U.S.C. § 318(a)

I. INTRODUCTION

A. Summary

Samsung Display Co., Ltd. ("Petitioner")[1] filed a Petition (Paper 1, "Pet.") for *inter partes* review of claims 1–19 of U.S. Patent No. 11,828,425 B2 (Ex. 1001, "the '425 patent"). Pictiva Displays International Ltd. ("Patent Owner")[2] disclaimed claims 1, 3, 5–8, 13–16, 18, and 19. Ex. 2001. Accordingly, claims 2, 4, 9–12, and 17 ("the challenged claims") remain at issue. Patent Owner filed a Preliminary Response. Paper 7 ("Prelim. Resp."). Pursuant to 35 U.S.C. § 314, we instituted *inter partes* review as to all of the challenged claims and all grounds raised in the Petition. Paper 12. Following institution, Patent Owner filed a Response. Paper 21 ("PO Resp."). Petitioner filed a Reply to Patent Owner's Response (Paper 29, "Pet. Reply"), and Patent Owner filed a Sur-reply (Paper 35, "PO Sur-reply"). On October 24, 2025, we held an oral hearing. A transcript of the hearing is included in the record. Paper 52.

We have jurisdiction under 35 U.S.C. § 6. This decision is a Final Written Decision issued pursuant to 35 U.S.C. § 318(a). For the reasons we discuss below, we determine that Petitioner has proven by a preponderance of the evidence that the challenged claims are unpatentable.

---

[1] Petitioner identifies Samsung Display Co., Ltd., Samsung Electronics Co., Ltd., and Samsung Electronics America, Inc. as real parties-in-interest. Pet. 2.

[2] Patent Owner identifies Pictiva Displays International Ltd., "a subsidiary of Key Patent Innovations Limited," as "the owner" of the '164 patent. Paper 3, 1. Patent Owner further states that Key Patent Innovations Limited "is a wholly-owned subsidiary of New PP Licensing, LLC." *Id.*

B. Related Matters

The parties indicate that the ’425 patent is at issue in *Pictiva Displays International Ltd. v. Samsung Electronics Co., Ltd.*, Case No. 2:23-cv-00495 (E.D. Tex.) and *Pictiva Displays International Ltd. et al., v. Samsung Elecs. Co., Ltd. et al.*, No. 2:24-cv-00532 (E.D. Texas). Pet. 2; Paper 3, 1; Paper 8, 4.

C. The ’425 Patent

The ’425 patent is titled “Organic-Light Emitting Diode.” Ex. 1001, code (54). The specification of the ’425 patent states that “[o]ne object of the invention is to provide organic light-emitting diodes which can be used particularly diversely.” *Id.* at 1:26–27. The specification further teaches that the device may comprise “an organic layer sequence, a radiation exit area and an encapsulation.” *Id.* at 1:30–31. The organic layer sequence may contain a “radiation-emitting region which generates electromagnetic radiation in the spectral range from infrared radiation to UV radiation during operation.” *Id.* at 1:32–35. The organic light emitting diode may contain “a hole transport layer and also an electron transport layer as charge carrier transport layers.” *Id.* at 2:15–16. Figure 1 of the ’425 patent is reproduced below.

FIG 1

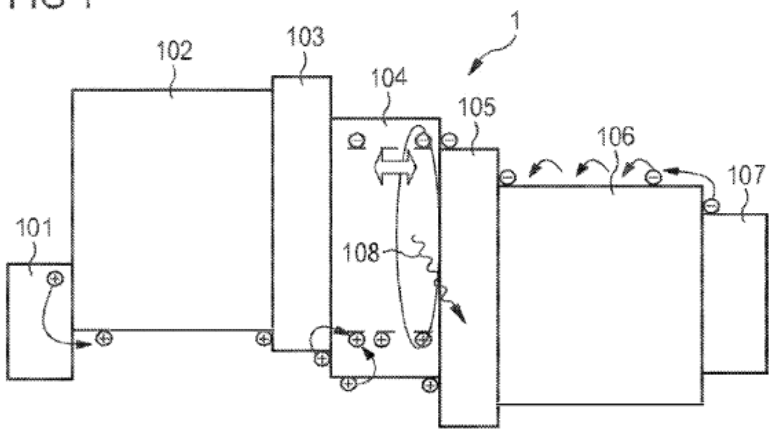

Figure 1 is a schematic band diagram of an exemplary organic light-emitting diode 1. *Id.* at 24:30–32. Figure 1 depicts anode 101, hole transport layer 102, electron barrier layer 103, radiation-emitting region 104, hole barrier layer 105, electron transport layer 106, and cathode 107. *Id.* at 24:33–62.

D. Challenged Claims

Claims 2, 4, 9–12, and 17 remain at issue. These claims all depend from claim 1, reproduced below.

1. A device comprising:

an organic light-emitting diode [OLED] comprising:

an organic layer sequence,

a radiation exit area, and

an encapsulation,

wherein the organic layer sequence and the encapsulation are disposed on a carrier,

wherein the organic layer sequence comprises at least one radiation-emitting region configured to generate electromagnetic radiation in a spectral range from infrared radiation to UV radiation during operation,

> wherein the organic layer sequence comprises an electron transport layer [ETL] that is n-doped; and
>
> wherein the organic layer sequence comprises an emission layer comprising an iridium-containing compound.

Ex. 1001, 87:60–88:9.

A. Asserted Grounds of Unpatentability

The Petition sets forth the following challenges to patentability.[3]

Ground	Claim(s) Challenged	35 U.S.C. §	Reference(s)/Basis
2	2, 17	103	Diekmann[4], Ma[5]
3	4	103	Diekmann, Lee[6]
4	9–11	103	Diekmann, Koshihara[7]
5	12	103	Diekmann, Harada[8]
7	2, 17	103	Suzuki[9], Ma
8	4	103	Suzuki, Lee
9	9–11	103	Suzuki, Caldwell[10]
10	12	103	Suzuki, Harada

[3] Petitioner also challenged claims 1, 3, 5–8, 13–16, 18–19 in Grounds 1 and 6. Because Patent Owner disclaimed those claims, Grounds 1 and 6 are no longer at issue.
[4] WO 2008/040323 A2, pub. Apr. 10, 2008, certified translation (Ex. 1004, "Diekmann").
[5] *Organic Light-Emitting Diodes Based on New N-doped Electron Transport Layer*, Synthetic Metals 158, pp. 810-814 (2008), (Ex. 1010, "Ma").
[6] US 2005/0146267 A1, pub. July 7, 2005 (Ex. 1008, "Lee").
[7] US 2008/0211395 A1, pub. Sept. 4, 2008 (Ex. 1012, "Koshihara").
[8] US 2006/0214892 A1, pub. Sept. 28, 2006 (Ex. 1009, "Harada").
[9] JP 2007-277631, pub. Oct. 25, 2007, certified translation (Ex. 1006, "Suzuki").
[10] US 2003/0159910 A1, pub. Aug. 28, 2003 (Ex. 1011, "Caldwell").

II. DISCUSSION

A. Description of Primary Prior Art References

1. Diekmann (Ex. 1004)

Diekmann "relates to an organic lighting device." Ex. 1004, code (57). Diekmann's Figure 2A is reproduced below.

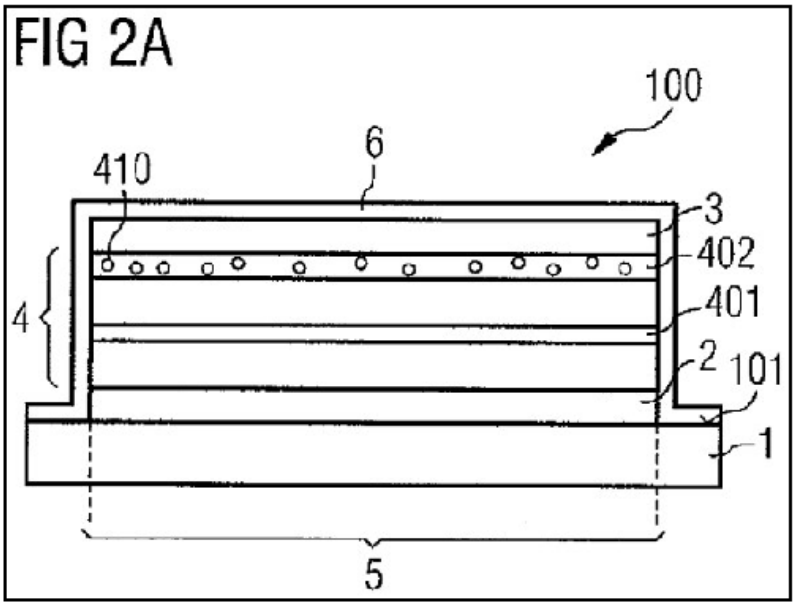

Figure 2A "shows a schematic sectional view of a lighting device," including substrate 1, "to which the first electrode 2 is applied." *Id.* at 91. In Figure 2A, "[a]n organic layer stack 4 with at least one layer 401 suitable for generating light is arranged on the first electrode 2, to which the second electrode 3 is applied." *Id.* The device includes "doped layer 402" and "thin-film encapsulation 6." *Id.* at 91, 92.

2. Suzuki (Ex. 1006)

Suzuki is a Japanese patent application titled "Method for Manufacturing Gas-Barrier Thin Film Laminate, Gas Barrier Thin Film Laminate, Gas Barrier Resin Substrate Material and Organic

Electroluminescent Device." Ex. 1006, code (54). Suzuki's Figure 9 is reproduced below.

[FIG. 9]

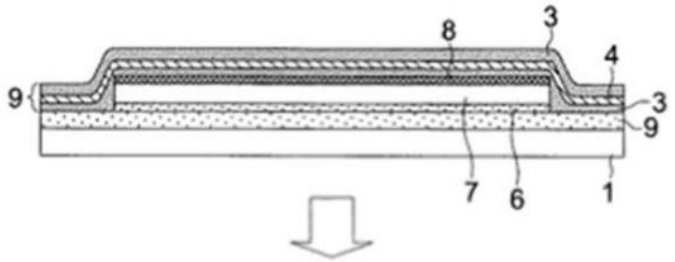

Figure 9 "shows an example of an organic EL device," including "an anode 6 . . . an organic layer (comprising a hole transport layer, a light emission layer, an electron transport layer, and the like) 7, and a cathode 8 on a resin substrate material 1 on which a gas barrier thin film laminate 9 is formed." *Id.* ¶ 274.

B. Level of Ordinary Skill in the Art

Petitioner contends a person of ordinary skill in the art "would have had a Bachelor's degree in chemistry, physics, or a comparable field of study, and at least three years of research or industrial experience with organic optoelectronic light-emitting devices." Pet. 10. Further, "[a]n individual with additional education could have less research or industrial experience and vice versa." *Id.* Patent Owner does not dispute Petitioner's formulation. *See generally* PO Resp. We adopt Petitioner's uncontested proposed definition because it is consistent with the disclosures of the asserted prior art. *See, e.g.,* Ex. 1006, code (57); Ex. 1011, code (57).

III. OBVIOUSNESS ANALYSIS

Petitioner contends that claims 2, 4, 9–12, and 17 are unpatentable under 35 U.S.C. § 103. For the reasons explained below, we find that

Petitioner has shown by a preponderance of evidence that these claims are unpatentable over the asserted prior art.

A. Petitioner's Mapping for Independent Claim 1

The challenged claims all depend from independent claim 1. Petitioner asserts both Diekmann and Suzuki teach the elements in independent claim 1. For its challenges based primarily on Diekmann (Grounds 2–5), Petitioner argues Diekmann's lighting device 100, which includes a first electrode 2 (anode), a second electrode 3 (a cathode), and an organic layer stack 4 teaches claim 1's organic light-emitting diode. Pet. 18–19. Petitioner maps Diekmann's organic layer stack 4, thin-film encapsulation 6, and substrate 1 to claim 1's organic layer sequence, encapsulation, and carrier, respectively. *Id.* at 19–22. Because Diekmann's organic layer stack 4 "has a doped layer 402 with a dopant 410, which acts as an electron donor sequence," Diekmann also teaches the claimed n-doped electron transport layer. *Id.* at 24 (quoting Ex. 1004, 91). Last, Petitioner explains that because Diekmann's organic layer stack 4 "comprises a layer containing $Ir(ppy)_3$, a green light-emitting iridium-containing compound," Diekmann also teaches the claimed emission layer comprising an iridium-containing compound. *Id.* at 26 (citing 1004, 91).

For Suzuki-based challenges (Grounds 7–10), Petitioner asserts Suzuki's "organic EL device" teaches claim 1's organic light-emitting diode, including the claimed organic layer sequence (Suzuki's organic layer 7), encapsulation (Suzuki's gas barrier thin film laminate 9 comprising a buffer film 3, barrier film 4, and another buffer film 3), and carrier (Suzuki's resin substrate material 1). Pet. 52–55 (citing Ex. 1006 ¶ 274, Fig. 9). Because Suzuki's organic layer sequence includes "an electron transport layer with a

high n nature doped with impurities," Suzuki also teaches the claimed n-doped electron transport layer (ETL). *Id.* at 57 (quoting Ex. 1006 ¶ 333). Last, Petitioner explains that Suzuki teaches the claimed emission layer comprising an iridium-containing compound because it teaches "*iridium* compounds" as the preferable phosphorescent dopant for its light emission layer. *Id.* at 58 (quoting Ex. 1006 ¶ 303).

Patent Owner does not challenge Petitioner's assertions above for independent claim 1. Based on Petitioner's analysis outlined above, we agree with Petitioner that both Diekmann and Suzuki teach the uncontested features of claim 1.

1. "generat[ing] electromagnetic radiation in a spectral range from infrared radiation to UV"

The only element Patent Owner challenges for claim 1 is "the organic layer sequence comprises at least one radiation-emitting region configured to generate electromagnetic radiation in a spectral range from infrared radiation to UV radiation during operation." Ex. 1001, 88:1–4; *see* PO Resp. 65. Petitioner asserts that Diekmann's organic layer stack 4 generates the claimed infrared to UV electromagnetic radiation because Diekmann teaches generating electromagnetic radiation "in an ultraviolet to infrared spectral range." Pet. 24 (quoting Ex. 1004, 76). Petitioner asserts that Suzuki's organic layer likewise generates the claimed infrared to UV electromagnetic radiation because Suzuki teaches "obtaining any desired light emission color." *Id.* at 56 (quoting Ex. 1006 ¶¶ 316–319).

Patent Owner asserts that in the related district court litigation, Petitioner "asserts that RGB OLEDs do not meet this limitation," and that Diekmann and Suzuki are also "red, green, blue" and thus do not "cover the

entire spectrum from infrared . . . to UV." PO Resp. 65. We disagree because Suzuki and Diekmann teach more than just red, green, and blue emission, as Petitioner explains. *See* Pet. Reply 26; *see also* Ex. 1004, 76 ("ultraviolet to infrared"), 91 ("white light"), 92 ("visible light"); Ex. 1006 ¶ 96 ("visible light range of 380-800 nm"), ¶ 319 ("any desired light emission color"). Moreover, Patent Owner has not asserted a claim construction requiring emission covering the entire spectrum from infrared to UV.[11] We agree with Petitioner that Diekmann's and Suzuki's "ultraviolet to infrared" and "[w]hite light" emission teach electromagnetic radiation in a spectral range from infrared radiation to UV radiation, as claim 1 requires.

B. Grounds 2 and 7: Obviousness of Claims 2 and 17 based on Diekmann/Suzuki and Ma

Dependent claims 2 and 17 additionally require that "the electron transport layer comprises 8-hydroxy-quinolinolato-lithium [Liq]." Ex. 1001, 88:12–13, 89:9–10. Petitioner asserts that Ma teaches this feature because it teaches "an OLED with an electron transport layer doped with 8-hydroxy-quinolinatolithium ('Liq')." Pet. 36, *see id.* at 70. Patent Owner challenges several aspects of Petitioner's showing for claims 2 and 17. We address those issues below.

1. Whether Ma Qualifies as a Prior Art Printed Publication

First, Patent Owner argues that Petitioner has not demonstrated that Ma was publicly accessible in August 2008 so as to qualify as prior art. PO

[11] As Petitioner notes, the district court adopted a claim construction requiring only "one or more wavelengths" in the infrared-to-UV spectrum. PO Resp. 26 (citing Ex. 2031, 47–48).

Resp. 16–24. We addressed this same issue in our Final Written Decision in IPR2024-01094. IPR2024-01094, Paper 42 at 9–13. As we explained there, Ma qualifies as prior art printed publication because the record evidence supports what Ma says on its face—that it was published online on August 29, 2008 by an Elsevier, an established publisher, in *Synthetic Metals*, which is a reputable journal. *Id.* For the same reason explained in IPR2024-01094, we agree with Petitioner that Ma qualifies as a prior art printed publication.

2. Petitioner's Rationale for Combining Ma

Petitioner asserts that a skilled artisan would been motivated to use Ma's Liq-doped electron transport layer in Diekmann/Suzuki "to lower driving voltage and enhance power efficiency" by "enhancing the carrier injection from the electrode to the transporting layer" and "increase[ing] the transport conductivity." *Id.* at 37 (quoting Ex. 1010, 810); *see id.* at 68. Petitioner further explains that according to Ma, Liq doping in the electron transport layer "results in increased current density and reduced driving voltage, compared to the undoped device." *Id.* (citing Ex. 1010, 813).

Although Patent Owner does not challenge that Ma teaches the additional feature in claims 2 and 17, Patent Owner raises a number of challenges to Petitioner's asserted rationale for combining Ma. *See* PO Resp. 27–47. First, Patent Owner asserts that skilled artisans would not have used Ma's Liq dopant in Diekmann/Suzuki because both employ electron-donor dopants that operate differently from Liq's electron-hopping dopant. *Id.* at 28–31. We disagree with Patent Owner's argument because it highlights a difference in the references' dopants without identifying any incompatibility. Even if Diekmann and Suzuki teach electron-donor type n-dopants as Patent Owner asserts, neither precludes or disparages Ma's

electron-hopping dopant. *See In re Fulton*, 391 F.3d 1195, 1201 (Fed. Cir. 2004) ("The prior art's mere disclosure of more than one alternative does not constitute a teaching away from . . . alternatives because such disclosure does not criticize, discredit, or otherwise discourage the solution claimed."). As Petitioner explains, "Liq acts as an n-dopant in Ma," which "increases ETL conductivity." Pet. Reply 10. Patent Owner does not contest that Liq acts as an n-dopant in Ma. *See* Pet. Reply 30. Thus, Petitioner's proposed combinations "substitute one known n-dopant for another to further the same goal of improving ETL conductivity." Pet. Reply 10.

Next, Patent Owner faults Petitioner for failing to show that using Ma's Liq dopant in Diekmann's/Suzuki's ETL would result in lower diffusion or higher efficiencies as compared to Diekmann's/Suzuki's preferred n-dopants, which included cesium, barium, or lithium fluoride. PO Resp. 31–35; *see* PO Sur-reply 4–5. We disagree with Patent Owner's argument because Petitioner does not need to show that Ma's Liq n-dopant "was an improvement in a categorical sense" over Diekmann's/Suzuki's n-dopants, so long as Ma's n-dopant was known and one skilled in the art would understand that implementing it had advantages. *See Intel Corp. v. Pact XPP Schweiz AG*, 61 F.4th 1373, 1381 (Fed. Cir. 2023) (quotation marks omitted); *In re Fulton*, 391 F.3d 1195, 1200 (Fed. Cir. 2004) ("[O]ur case law does not require that a particular combination must be the preferred, or the most desirable, combination described in the prior art."). Petitioner does not assert skilled artisans would have used Liq because it was a superior to Diekmann's/Suzuki's preferred dopants, but because doping ETLs with Liq had known benefits including lower driving voltage and enhanced power efficiency from enhanced carrier injection increased

transport conductivity, as compared to an undoped device. Pet. 37 (citing Ex. 1010, 813). That other potentially suitable or even superior n-dopants were also known does not make Liq nonobvious. Given Liq's benefits outlined above, Petitioner has articulated sufficient reasoning with rational underpinning to support the legal conclusion that its proffered combination of Ma's known dopant in Diekmann's/Suzuki's device would have been obvious to one skilled in the art. *See KSR Int'l Co. v. Teleflex Inc.*, 550 U.S. 398, 418 (2007).

Next, Patent Owner argues that Ma teaches Liq doping only in fluorescent OLEDs, not in phosphorescent OLEDs like Diekmann's or Suzuki's. PO Resp. 37–38. Liq was unsuitable for Diekmann's/Suzuki's phosphorescent OLEDs, according to Patent Owner, given problems with quenching. *Id.* at 38–40. Again, we disagree. First, "we do not ignore the modifications that one skilled in the art would make to a device borrowed from the prior art." *In re ICON Health & Fitness, Inc.*, 496 F.3d 1374, 1382 (Fed. Cir. 2007). Although Liq may have introduced quenching concerns, that does not mean it would be beyond a skilled artisan's capability to address that concern. To the contrary, as Petitioner notes, quenching concerns were not unique to Liq, and skilled artisans knew to employ blocking layers to mitigate quenching, as evidenced by Diekmann's and Suzuki's inclusion of such blocking layers. *See* Pet. Reply 16–17 (citing Exs. 1016, 1019, 1030 1044). In addition, even if Ma's Liq dopant did come at the cost of potential quenching, that solvable tradeoff would not necessarily undermine Petitioner's proffered combination given Petitioner's articulated benefits regarding lower driving voltage and enhanced power efficiency. *See Winner Int'l Royalty Corp. v. Wang*, 202 F.3d 1340, 1349

n.8 (Fed. Cir. 2000) ("The fact that the motivating benefit comes at the expense of another benefit, however, should not nullify its use as a basis to modify the disclosure of one reference with the teachings of another.").

Patent Owner next challenges Petitioner's combinations because Liq doping could result in charge imbalance that could lead to various problems like dark spots, luminance decay, and low efficiency. PO Resp. 41. We disagree. Ma's emphasis on maintaining charge balance does not teach away from using Liq in Suzuki's or Diekmann's systems, as Patent Owner contends. *See id.* at 40–41. To the contrary, even if Patent Owner is correct that "Liq introduces traps for charge carriers," *id.* at 41, Ma teaches Liq as a suitable ETL dopant that can improve charge balance despite such traps. *See* Ex. 1044 ¶ 60; *see also* Ex. 1010, Abstract, 812–14. Thus, Ma supports that identifying appropriate doping concentrations for charge balance and efficiency was "a matter of routine optimization" and well within a skilled artisan's capability, as Petitioner's expert, Dr. Holmes, explains. Ex. 1044 ¶ 60.

3. Reasonable Expectation of Success

In addition, we agree with Petitioner that a skilled artisan would have a reasonable expectation of success in making the proposed combination. Pet. Reply 18–20; Pet. 38, 68. Specifically, we agree with Petitioner that a skilled artisan would reasonably expect success in addressing those issues because, as Dr. Holmes explains, phosphorescent OLEDs with doped transport layers were a well-established technology, Liq was a well-studied material that operated analogously as other n-dopants, identifying appropriate doping concentrations was routine optimization for skilled artisans, and well-known blocking layers addressed quenching. Ex. 1044

¶¶ 60, 65–67, 69; *see* Pet. Reply. 18–19; *see also* Pet. 38 (citing Ex. 1003 ¶¶ 145–146). In short, we agree with Dr. Holmes that "OLED stack design followed a modular approach with an expectation of success in replacing known components for certain layers with other known components that serve the same function." *Id.* ¶ 67. On the other side, the issues that Patent Owner raises in contesting expectation of success—i.e., "minimizing triplet exciton quenching and avoiding insulation and charge trapping" (PO Resp. 42) and "maintain[ing] the correct energy level balance, avoid quenching and polaron-exciton annihilation" (*id.* at 44)—relate to unclaimed optimizations that go well beyond what is necessary to show that skilled artisans would have had a reasonable expectation of achieving "what is claimed in the patent-at-issue." *See Intelligent Bio-Sys., Inc. v. Illumina Cambridge Ltd.*, 821 F.3d 1359, 1367 (Fed. Cir. 2016); *see also* Pet. Reply 20 ("The claims do not require fully optimized devices without quenching and charge carrier surplus; only an operational OLED."). Aside from general assertions that the claimed systems are "delicate," "extremely challenging," and require "careful experimentation and device engineering" (PO Resp. 42, 44), Patent Owner does not identify anything unique to Diekmann or Suzuki that might make Liq-doping unsuitable for their ETLs, even though it is suitable for Ma's.

4. Conclusion for Grounds 2 and 7

Other than the arguments above, Patent Owner does not additionally challenge Petitioner's showing for dependent claims 2 and 17. Based on Petitioner's analysis outlined above, we agree with Petitioner that dependent claims 2 and 17 would have been obvious over Diekmann and Ma (Ground 2) and over Suzuki and Ma (Ground 7).

C. Grounds 3 and 8: Obviousness of Claim 4 based on Diekmann/Suzuki and Lee

1. Petitioner's Proposed Combinations

Dependent claim 4 requires that "the encapsulation comprises a first encapsulation layer and a second encapsulation layer, the first and the second encapsulation layer each having a respective volume structure, wherein the volume structure of the second encapsulation layer is independent of the volume structure of the first encapsulation layer, and the volume structure of the second encapsulation layer has a higher amorphicity than the volume structure of the first encapsulation layer." Ex. 1001, 88:20–29. Petitioner asserts that Lee's encapsulation layer, including polymer layer 38 with 70% crystallinity and polymer layer 32 with 10% crystallinity, teaches the encapsulation layer of claim 4. Pet. 39–43. We agree with Petitioner that Lee teaches the specific encapsulation layer recited in claim 4, which Patent Owner does not contest.

2. Petitioner's Rationale for Combining Lee

Petitioner asserts a skilled artisan would been motivated to use Lee's specific two-layer encapsulation in Diekmann (Ground 3) and Suzuki (Ground 8) "to protect OLEDs from the ambient environment" as Lee explains. *Id.* at 40; 70–72; *see* Ex. 1008 ¶ 5 (explaining that cathode metals "may be easily oxidized by moisture or oxygen from air" and thus "it is important to protect these materials from air both during processing and during use"). In addition, Petitioner notes that Lee teaches "specific benefits of the type of multi-layer encapsulation" including "decoupl[ing] adjacent inorganic layers to prevent the propagation of defects between inorganic layers," while also "block[ing] water vapor and oxygen permeation into the

OLED." *Id.* at 40 (quoting Ex. 1008 ¶ 20 (internal quotation marks omitted)); *see id.* at 71. These encapsulation benefits may "provide 'a significantly improved lifetime,'" according to Lee. *Id.* (quoting Ex. 1008 ¶ 20); *see id.* at 71.

Patent Owner asserts Petitioner's rationale fails because "Diekmann and Suzuki already encapsulate their OLED devices" and Petitioner did not show why Lee's encapsulation "would be better than Diekmann's or Suzuki's existing encapsulation." PO Resp. 48; *see* PO Resp. 49–50 (disputing whether Lee's encapsulation would "improve the lifetime" over Diekmann's barrier layers), 50–51 (same argument regarding Lee's encapsulation over Suzuki's). We disagree with Patent Owner's argument because Petitioner does not need to show that Lee's encapsulation method was an improvement over Diekmann's/Suzuki's encapsulation, so long as Lee's encapsulation was known and one skilled in the art would understand that implementing it had known advantages, which Lee teaches include protecting cathode materials from air/oxidation and preventing defect propagation between inorganic layers. *See Intel*, 61 F.4th 1373, 1381; *see also* Ex. 1008 ¶¶ 5, 20; Pet. 40. Given these benefits, Petitioner has articulated sufficient reasoning with rational underpinning to support the legal conclusion that its proffered combination of Lee's known encapsulation layer in Diekmann's/Suzuki's device would have been obvious to one skilled in the art. That other potentially suitable encapsulation layers were also known does not make Lee's two-layer encapsulation layer with known benefits nonobvious.

3. Reasonable Expectation of Success

In addition, we agree with Petitioner that a skilled artisan would have had a reasonable expectation of success in making the proposed combinations. *See* Pet. 41, 71–72. Specifically, Petitioner explains, with relevant support from Dr. Holmes, and the prior art, that Diekmann and Suzuki use alternating multilayer encapsulations similar to Lee's, so that applying Lee's encapsulation merely replaces one set of alternating layers of inorganic barriers and polymers with another. Pet. 41, 71–72; Ex. 1003 ¶¶ 150–151, 232–233. Patent Owner's criticism that Petitioner does not address brittleness concerns (PO Resp. 52) or identify "any appropriate parylene system, the annealing temperature, or temperature profile across the encapsulation layer" (*id.* at 53), addresses unclaimed optimization features that go well beyond what is necessary to show that skilled artisans would have had a reasonable expectation of achieving what is claimed. *See Intelligent Bio-Sys.*, 821 F.3d at 1367. Critically, beyond general allegations that Petitioner's analysis is "conclusory and unexplained," PO Resp. 53, Patent Owner does not offer any reason why Lee's specific multilayer encapsulation is incompatible with Diekmann or Suzuki, which also employ multilayer encapsulations. *See* PO Resp. 51–53.

4. Conclusion for Grounds 3 and 8

Based on Petitioner's analysis outlined above, we agree with Petitioner that dependent claim 4 would have been obvious over Diekmann and Lee (Ground 3), and over Suzuki and Lee (Ground 8).

D. Grounds 4 and 9: Obviousness of Claims 9–11 based on Diekmann-Koshihara and Suzuki-Caldwell

1. Petitioner's Proposed Combinations

Dependent claims 9–11 require "at least one touch-sensitive operating element . . . compris[ing] at least one touch sensor" (claim 9), "the at least one touch sensor is integrated into the organic light-emitting diode" (claim 10), and "the touch-sensitive operating element is arranged at the radiation exit area of the device" (claim 11). Ex. 1001, 88:48–57. For its Diekmann-based challenge to claims 9–11 (Ground 4), Petitioner asserts that Koshihara's "touch-sensitive organic EL device," which includes an integrated "touch panel unit" located in Koshihara's radiation exit area (counter sealing substrate 12) teaches these additional features. Pet. 43–48.

For its Suzuki-based challenge (Ground 9), Petitioner asserts that Caldwell's "bottom-emitting touch switch assembly," comprising a touch sensor (electrode 31) integrated into the OLED at Caldwell's radiation exit area (the bottom of Caldwell's bottom-emitting OLED), teaches the additional features in dependent claims 9–11. *Id.* at 73–76.

Patent Owner asserts that "there is no evidence here that the touch sensors . . . are integrated into the OLED device instead of a larger display." PO Resp. 64. We disagree. As Petitioner explains, Koshihara's and Caldwell's touch sensors are integrated into their OLEDs at their radiation exit areas. Pet. Reply 26; *see* Pet. 47–48, 75–76; *see also* Ex. 1012, Fig. 3 ¶¶ 31, 46 (describing integrated touch sensors); Ex. 1011 ¶ 74 (same). Patent Owner's single-sentence "no evidence" objection (PO Resp. 64) does not meaningfully respond to Petitioner's showing or the evidence Petitioner produces showing Koshihara's and Caldwell's touch sensors integrated into their respective OLEDs at their radiation exit areas. *See* Pet. Reply 26; Pet. 47–48, 75–76. Patent Owner does not otherwise challenge that Koshihara's

and Caldwell's touch sensors teach the additional elements in claims 9–11. Based on Petitioner's analysis above, we agree with Petitioner that Koshihara and Caldwell teach the integrated touch-sensor elements recited in dependent claims 9–11.

2. Petitioner's Rationale for Combining Touch Sensors

Petitioner asserts a skilled artisan would have been motivated to incorporate Koshihara's touch sensors into Diekmann's OLED (Ground 4) because Diekmann contemplates integrated sensors for controlling functions like on/off, brightness, or color, and Koshihara's touch sensors were a known way to "'allow[] a user to manually input instructions' intuitively by touch." Pet. 45 (quoting Ex. 1012 ¶ 4). Further, integrating Koshihara's touch sensor integrated with OLED at the radiation exit area would have recognized benefits including preventing oxidization at the light emitting, limiting additional material and manufacturing costs, and achieving a thinner device profile. *Id.* (citing Ex. 1012 ¶ 30, Ex. 1011 ¶¶ 6–7, Ex.1024, 3:2–7; Ex. 1003 ¶¶ 165–166). According to Petitioner, a skilled artisan would also have been motivated to incorporate Caldwell's touch sensor directly into Suzuki's OLED (Ground 9) because it was a known way to provide electronic-device control while reducing material/manufacturing costs and maintaining a thinner OLED profile. *Id.* at 74 (citing Ex. 1012 ¶¶ 30–31; Ex. 1003 ¶¶ 241–242; Ex. 1011 ¶¶ 6–7).

Patent Owner asserts Petitioner's rationale for combining Koshihara's/Caldwell's touch sensors is insufficient. *See* PO Resp. 53–59. First, Patent Owner asserts that Petitioner's cost-savings and thinner-profile rationales are flawed because those are benefits of integrating an existing

separate touch sensor device into an OLED. Because neither Diekmann nor Suzuki has such separate touch sensors, "***[a]dding*** a touch sensitive element onto of the OLED without a touch sensor would only ***increase*** thickness . . . and cost." PO Resp. 55. We disagree. While cost savings and a thinner profile alone would not justify adding touch sensors to Diekmann or Suzuki, those are not the only reasons Petitioner asserts for its combination. Instead, as outlined above, Koshihara's/Caldwell's touch sensors provided users with a way to control Diekmann's/Suzuki's electronic-device, while maintaining cost-savings and a thinner profile.

Next, Patent Owner asserts that "Diekmann's existing user control means that Diekmann has no need of additional controls." *Id.* at 56. We disagree with Patent Owner's argument first because it wrongly assumes Petitioner proposes adding Koshihara's touch control to Diekmann's existing controls, rather than using Koshihara's touch control as Diekmann's control device, as Petitioner proposes. *See, e.g.,* Pet. 44–45 (describing "[u]sing touch sensors as input devices"). We also disagree because "[Federal Circuit] precedent . . . does not require that the motivation be the best option, only that it be a suitable option from which the prior art did not teach away." *Par Pharm., Inc. v. TWi Pharms., Inc.*, 773 F. 3d 1186, 1197–98 (Fed. Cir 2014). Thus, so long as Diekmann does not teach away from Koshihara's touch-sensor controls (it does not), it is irrelevant whether Diekmann teaches a different control.

In short, that other controls were known does not undermine that skilled artisans would have been motivated to use Koshihara's touch control because it was a known way of allowing users to manually input instructions

in an intuitive way, as Petitioner explains and as outlined above.[12] *See* Pet. 45. Given that rationale, along with the Petitioner's other articulated benefits outlined above (i.e., preventing oxidization, limiting additional material/manufacturing costs, achieving a thinner device profile), Petitioner articulated sufficient reasoning with rational underpinning to support that its proffered combination of Koshihara's touch control in Diekmann's device would have been obvious to one skilled in the art. That same rationale (i.e., a known way to provide electronic-device control while reducing material/manufacturing costs and maintaining a thinner OLED profile) similarly explains why skilled artisans would have combined Caldwell's touch sensor into Suzuki's OLED, as Petitioner Proposes and as outlined above.

3. Reasonable Expectation of Success

In addition, we agree with Petitioner that a skilled artisan would have had a reasonable expectation of success in making the proposed combinations. Pet. 45, 74. Specifically, as Dr. Holmes explains implementing touch-sensor controls in OLEDs "would have been a routine matter well within the ability of a [skilled artisan]" because such sensors "were well known prior to the '425 patent, with applications already existing at that time for controlling the functionality of devices including OLED displays and OLED light sources." Ex 1003 ¶ 167; *see id.* at ¶ 243. Dr. Holmes's testimony is consistent with the multiple prior-art references, like Caldwell and Koshihara, that included OLEDs with integrated touch

[12] Petitioner's on/off-switching and brightness-control examples undermine Patent Owner's argument that touch sensors are not needed for Diekmann's white lighting device. Pet. 44; *see* PO Resp. 56.

sensors. On the other side, beyond general allegations that Petitioner's analysis "conclusory" and "vague," Patent Owner does not offer any reason why touch-sensor controls might be incompatible with Diekmann or Suzuki. *See* PO Resp. 57–59.

4. Conclusion for Grounds 4 and 9

Based on Petitioner's analysis outlined above, we agree with Petitioner that dependent claims 9–11 would have been obvious over Diekmann and Koshihara (Ground 4) and over Suzuki and Caldwell (Ground 9).

E. Grounds 5 and 10: Obviousness of Claim 12 based on Diekmann/Suzuki and Harada

1. Petitioner's Proposed Combinations

Dependent claim 12 requires that "the device is drivable by means of a gesture control." Ex. 1001, 88:50–60. Petitioner asserts that Harada teaches this additional feature because it teaches a "display device [that] performs 'gesture recognition using a hand shape,'" as depicted in Harada's figures 14 and 15. Pet. 49 (quoting Ex. 1009 ¶ 71). Patent Owner argues Harada's gesture control is insufficient because it produces commands to a personal computer, rather than to an OLED, as claim 12 requires. PO Resp. 59–60. We disagree with Patent Owner's argument because it attacks Harada individually, rather than the combination of Diekmann/Suzuki and Harada that Petitioner asserts. *See In re Keller*, 642 F.2d 413, 426 (CCPA 1981). Even if Harada does teach sending commands only to a personal computer, that does not undermine Petitioner's challenge because Petitioner proposes combining Diekmann's/Suzuki's OLED commands with Harada's gesture control. *See* Pet. 49, 77. Patent Owner

also argues "there is no evidence here that the . . . gesture controls are integrated into the OLED device instead of a larger display." PO Resp. 64. We disagree with this argument because claim 12 does not require gesture controls integrated into the OLED. Based on Petitioner's analysis above, we agree with Petitioner that its proposed combinations of Harada and Diekmann/Suzuki teach claim 12's gesture control.

2. Petitioner's Rationale and Reasonable Expectation of Success for Combining Harada

Petitioner asserts a skilled artisan would been motivated to incorporate Harada's gesture-control functionality in Diekmann (Ground 5) and Suzuki (Ground 10) because it was a known way "to allow a user to operate the device 'in more natural ways.'" Pet. 51 (quoting Ex. 1009 ¶ 73); *see id.* at 77. Petitioner explains, again with relevant support from Dr. Holmes and the prior art, that such sensors were well-known in the art at the time and that implementing such gesture control would have been a routine matter well within skilled artisans' ability. *Id.* at 51 (citing Ex. 1003 ¶ 178; Exs. 1032, 1009); *see id.* at 77–78.

Patent Owner argues Petitioner's reason for the combination fails because Diekmann already has robust user controls and Petitioner did not adequately show that skilled artisans could reasonably expect success in making the proposed combinations. PO Resp. 62–64. Patent Owner's arguments here parallel its previous arguments and we disagree with them for similar reasons. In short, that other potentially suitable user controls (like Diekmann's) were known neither makes Harada's known gesture control nonobvious, nor undermines that skilled artisans would have included Harada's gesture-control functionality in Diekmann/Suzuki

because it provided a natural way to allow users to operate those devices, as Petitioner explains. *See* Pet. 51, 77–78. In addition, other than a general criticism that Petitioner's analysis is conclusory, Patent Owner does not identify any reason why Harada's gesture-control might be incompatible with Diekmann or Suzuki. PO Resp. 63–64. Absent such an explanation, we credit Dr. Holmes's unrebutted testimony that implementing such known gesture controls would have been a routine matter well within skilled artisans' ability, which is consistent with the prior art's disclosure of that feature. *See* Ex. 1003 ¶¶ 178, 243; *see also* Exs. 1009, 1032.

3. Conclusion for Grounds 5 and 10

Based on Petitioner's analysis outlined above, we agree with Petitioner that dependent claim 12 would have been obvious over Harada and Diekmann (Ground 5), and over Harada and Suzuki (Ground 10).

IV. CONCLUSION

Based on the fully developed trial record, Petitioner demonstrates by a preponderance of the evidence that claims 2, 4, 9–12, and 17 are unpatentable. A summary of our conclusions is set forth in the table below.

Claims	35 U.S.C. §	Reference(s)/ Basis	Claims Shown Unpatentable	Claims Not Shown Unpatentable
2, 17	103	Diekmann, Ma	2, 17	
2, 17	103	Suzuki, Ma	2, 17	
4	103	Diekmann, Lee	4	
4	103	Suzuki, Lee	4	
9–11	103	Diekmann, Koshihara	9–11	
9–11	103	Suzuki, Caldwell	9–11	
12	103	Diekmann, Harada	12	
12	103	Suzuki, Harada	12	
Overall Outcome			2, 4, 9–12, 17	

V. ORDER

Accordingly, it is

ORDERED that claims 2, 4, 9–12, and 17 of the ’425 patent have been shown to be unpatentable; and

FURTHER ORDERED that, because this is a Final Written Decision, parties to this proceeding seeking judicial review of our decision must comply with the notice and service requirements of 37 C.F.R. ¶ 90.2.

FOR PETITIONER:

Scott Weidenfeller
David Garr
COVINGTRON & BURLING LLP
sweidenfeller@cov.com
dgarr@cov.com

FOR PATENT OWNER:

Hong Zhong
Philip Warrick
Jie Gao
Blair Silver
IRELL & MANELLA LLP
hzhong@irell.com
pwarrick@irell.com
jgao@irell.com
bsilver@irell.com