UNITED STATES PATENT AND TRADEMARK OFFICE

BEFORE THE PATENT TRIAL AND APPEAL BOARD

SAMSUNG DISPLAY CO., LTD.
Petitioner,

v.

PICTIVA DISPLAYS INTERNATIONAL LTD.,
Patent Owner.

Case No. IPR2024-01095
Patent No. 11,828,425

DECLARATION OF DR. P. MORGAN PATTISON, PhD.

TABLE OF CONTENTS

Page

I. INTRODUCTION 1

II. QUALIFICATION AND EXPERIENCE 1

III. LEGAL STANDARDS 5

A. Claim Construction 5

B. Obviousness 6

C. Level of Ordinary Skill in the Art 9

D. Materials Relied on in Forming My Opinions 11

IV. TECHNOLOGICAL BACKGROUND 11

V. OVERVIEW OF THE ALLEGED PRIOR ART 16

A. Diekmann (EX1004 & EX1005) 16

B. Suzuki (EX1006 & EX1007) 20

C. Ma (EX1010) 22

VI. A POSITA WOULD NOT HAVE USED LIQ AS A ETL DOPANT IN DIEKMANN OR SUZUKI 24

A. Samsung and Dr. Holmes Provide No Reason for Why a POSITA Would Use Liq in Diekman's or Suzuki's ETL With a Reasonable Expectation of Success 25

B. Ma Does Not Provide a Motivation to Dope Every ETL with Liq 33

C. The Use of Liq as an ETL Dopant Was Experimental for Limited Use in Stable, Fluorescent OLED Devices with Bphen at the Time 39

Pictiva EX2002
Samsung v Pictiva
IPR2026-00129

D. Samsung and Dr. Holmes Do Not Account for the Differences Between Ma's Alq_3-based Fluorescent Emission System Versus the Claimed Iridium-based Phosphorescent Emission Systems 48

E. Samsung and Dr. Holmes Do Not Address the Delicate Energy-Level Balance Required for the Different Organic Layers in an OLED Stack 52

F. Samsung and Dr. Holmes Offer No Evidence that Diekmann and Suzuki Would Have Gained Any Benefit from Using a Liq-doped ETL 56

Pictiva EX2002
Samsung v Pictiva
IPR2026-00129

1. I, P. Morgan Pattison, PhD, declare as follows:

I. INTRODUCTION

2. I have been retained as an independent expert on behalf of Pictiva Displays International Ltd. (Patent Owner) to provide technical background and opinions related to U.S. Patent No. 11,828,425 (EX1001) (the '425 Patent) at issue in in IPR2024-01095, including to Petitioner Samsung Display Co., Ltd.'s position regarding Grounds II and VII (Pet. 36-38, 69-70) involving Claims 2 and 17 and other matters addressed herein.

3. For this service, I am compensated for my time at my normal consulting rate. My compensation does not depend on the outcome of any matter or on any of the opinions provided below. I have no financial interest in this matter.

4. My testimony herein is based on my technical background, my years of experience in the field of organic light emitting diodes (OLED) and my review of the materials cited herein.

II. QUALIFICATION AND EXPERIENCE

5. My curriculum vitae (CV) is attached hereto as Exhibit A and provides an accurate identification of my background and experience.

Pictiva EX2002
Samsung v Pictiva
IPR2026-00129

6. I have over 25 years of experience in the areas of light emitting diodes LEDs), organic light emitting diodes (OLEDs), lighting, solid state lighting (SSL), displays, lasers, and optoelectronic materials and devices.

7. I attended the University of California, Santa Barbara, receiving my M.S. in Electrical Engineering, Electronics and Photonics in 2003 and my Ph.D. Materials Science, Electronic and Photonic Materials in 2006. I received my B.S. in Electrical Engineering, Electronic Devices and Materials from the University of California, San Diego, in 1996.

8. This coursework included significant classwork in both chemistry and electronic devices as well as classwork and research on the fabrication and evaluation of optoelectronic devices, such as light emitting diodes, which require understanding of both materials chemical properties as well as electronic properties. This coursework through my Ph.D. exceeds those offered to a bachelors in chemistry and physics relevant to OLED technology at the time of the ’425 Patent.

9. Presently, I am the President of Solid State Lighting Services, Inc. In that capacity, I am responsible for, among other things, providing technical, strategic, and market expertise in the areas of LEDs, OLEDs, lighting, SSL, displays, and optoelectronic materials and devices. I am also involved in connecting optical device technical performance with application requirements for

Pictiva EX2002
Samsung v Pictiva
IPR2026-00129

displays, general illumination, color discrimination applications (medical, retail), and various novel lighting applications enabled by SSL technology. Solid State Lighting Services also provides services related to LED and lighting product failure and reliability evaluation. I founded Solid State Lighting Services in 2007, and I have worked at Solid State Lighting Services, Inc. for almost 17 years.

10. From January 2006 through November 2007, I worked as a Project Manager at the U.S. Department of Energy (DOE). In that capacity, I was responsible for managing DOE funded research and development projects in SSL, including efficient LED and OLED-based lighting technologies. My duties included managing the solicitation and selection of R&D projects with the objective of saving energy. As part of the solicitation and selection process, I evaluated and identified priority areas of research necessary for advancement of SSL in terms of efficiency, lighting performance, and cost. In this capacity I identified priority R&D areas to achieve the maximum energy savings, I managed R&D funding solicitations, and I managed DOE funded R&D projects covering all aspects of LED and OLED lighting technology including, light emitting materials and devices (LEDs and OLEDs), power supplies, optics, integrated fixtures, lighting controls, and lighting applications.

11. From September 2000 through January 2006, I was a Graduate Student Researcher at University of California Santa Barbara (UCSB). I performed

Pictiva EX2002
Samsung v Pictiva
IPR2026-00129

my Doctoral thesis research under Professor Shuji Nakamura (Nobel Prize in Physics 2014) on gallium-nitride (GaN) based micro-cavity light emitting diodes. The research included: epitaxial structure design and growth by MOCVD, semiconductor process development, materials characterization, and electro-optical device characterization. While at UCSB, I participated in additional areas of research, including research and development of UV LEDs, vertical cavity surface emitting lasers (VCSEL), and edge emitting laser diodes.

12. From November 1996 through May 2000, I worked as a Laser Test Engineer at Cymer Laser. I was responsible for testing and developing test methodology for production and prototype KrF and ArF excimer lasers used in deep UV photolithography for manufacturing of advanced semiconductor products. Testing included optical characterization and full system troubleshooting. I also developed new electrical and optical test methodologies to improve test cycle times, automated test procedures, and developed test documentation.

13. I am listed as an inventor on at least 11 issued patents, including multiple patents in the field of LED materials and device design, LED lighting product design, and home automation and controls for lighting.

14. I have authored numerous peer reviewed journal articles and publications on the topics of SSL technology and applications.

15. Since 2008, I have also authored annually updated R&D and technology and manufacturing roadmaps used by the DOE to guide federal lighting R&D efforts. I frequently give presentations and talks on the topic of LED and OLED technology, SSL status and R&D opportunities, and application advancements enabled by LED technology.

III. LEGAL STANDARDS

16. I am not an attorney. I have relied on instructions from counsel as to the applicable legal standards to use in arriving at my opinions in this Declaration. I am relying only on instructions from Patent Owner's attorneys for these legal standards.

17. I understand that Samsung, as the Petitioner, has the burden of proving that the challenged claims of the '425 Patent are unpatentable by a preponderance of the evidence.

A. Claim Construction

18. I understand that claim terms in an IPR are given their ordinary and customary meaning as understood by one of ordinary skill in the art (POSITA) in view of the entire patent and the prosecution history pertaining to the patent. I understand claim terms are to be given the meaning they would have to a person having ordinary skill in the art at the time of the invention, taking into consideration the patent, its file history, and, secondarily, any applicable extrinsic

Pictiva EX2002
Samsung v Pictiva
IPR2026-00129

evidence (*e.g.*, dictionary definitions). I understand that applicants sometimes provide special definitions for claim terms that differ from the meaning the term might otherwise possess, also known as lexicography. I have applied these standards in this declaration.

19. I have no opinion on any particular claim construction at this time.

B. Obviousness

20. I understand that a patent claim is invalid if it would have been obvious in view of the prior art. I further understand that obviousness is determined from the perspective of a POSITA at the time the invention was made.

21. Whether or not explicitly stated below, my analysis of the prior art is made as of the time the invention was made. For purposes of this *inter partes* review, I have assumed that the priority date for the '425 Patent is December 11, 2008. My analysis, however, does not change if that date was December 9, 2009.

22. I understand that a claim may be unpatentable as obvious if the differences between the subject matter in the prior art and the subject matter in the claim would have been obvious to a POSITA at the time of the invention. I understand that obviousness can be based on a single prior art reference or a combination of prior art references.

23. I understand that a prior art reference must be viewed as a whole. I further understand that the following factors must be evaluated to determine

Pictiva EX2002
Samsung v Pictiva
IPR2026-00129

whether the claimed subject matter is obvious: (1) the scope and content of the prior art; (2) the difference or differences, if any, between each claim of the patent and the prior art; (3) the level of ordinary skill in the art at the time the patent was filed; (4) objective indicia of non-obviousness.

24. I understand certain objective indicia can be important evidence regarding whether a patent is obvious or nonobvious. Such indicia include: commercial success of products covered by the patent claims; a long-felt need for the invention; failed attempts by others to make the invention; copying of the invention by others in the field; unexpected results achieved by the invention as compared to the closest prior art; praise of the invention by the infringer or others in the field; the taking of licenses under the patent by others; expressions of surprise by experts and those skilled in the art at the making of the invention; and the patentee proceeding contrary to the accepted wisdom of the prior art.

25. I have been informed and understand that the teachings of two or more references may be combined if such a combination would have been obvious to one having ordinary skill in the art. It is also my understanding that where there is a reason to modify or combine the prior art to achieve the claimed invention, there must also be a reasonable expectation of success in so doing to render the claimed invention obvious. I also understand that the references themselves need not provide a specific hint or suggestion of the alteration needed to arrive at the

claimed invention; the analysis may include recourse to logic, judgment, and common sense available to a POSITA.

26. I understand that when the prior art "teaches away" from combining prior art references or certain known elements, discovery of a successful means of combining them is less likely to be obvious. A prior art reference may be said to "teach away" from a patent when a person of ordinary skill, upon reading the reference, would be discouraged from following the path set out in the patent or would be led in a direction divergent from the path that was taken by the patent.

27. I have been informed and understand that one of ordinary skill in the art has ordinary creativity, and is not an automaton. I have been informed and understand that in considering obviousness, it is important not to determine obviousness using the benefit of hindsight derived from the patent being considered.

28. Finally, I understand that Patent Examiners at the U.S. Patent and Trademark Office ("USPTO") rely upon certain exemplary rationales in review patent applications to understand whether the subject matter of the claims is obvious. I understand that the following is a list of exemplary rationales relied upon by Patent Examiners at the USPTO:

A. Combining prior art elements according to known methods to yield predictable results;

B. Simple substitution of one known element for another to obtain predictable results;

C. Use of a known technique to improve similar devices (methods, or products) in the same way;

D. Applying a known technique to a known device (method, or product) ready for improvement to yield predictable results;

E. "Obvious to try"- Choosing from a finite number of identified, predictable solutions, with a reasonable expectation of success;

F. Known work in one field of endeavor may prompt variations of it for use in either the same field or a different one based on design incentives or other market forces if the variations are predictable to one of ordinary skill in the art; and

G. Some teaching, suggestion, or motivation in the prior art that would have led one of ordinary skill to modify the prior art reference or to combine prior art reference teachings to arrive at the claimed invention.

C. Level of Ordinary Skill in the Art

29. I understand that interpreting patent claims and validity must be undertaken from the perspective of a hypothetical POSITA. I understand that in determining the characteristics of a hypothetical person having ordinary skill in the art of the patent at the time of the claimed invention, I must consider several

Pictiva EX2002
Samsung v Pictiva
IPR2026-00129

things, including the type of problems encountered in the art, the solutions to those problems, the rapidity with which innovations are made, the sophistication of the technology, and the education level and experience of people working in the field.

30. I understand that Samsung and Dr. Holmes defines a POSITA at the time of the invention as someone with "a Bachelor's degree in chemistry, physics, or a comparable field of study, and at least three years of research or industrial experience with organic optoelectronic light-emitting devices." Pet. 10 (citing EX1003, ¶ 63). It is not clear what Samsung means by "a comparable field of study." For the purposes of this Declaration, I have been instructed to apply Samsung's proposed level of skill in the art.

31. I express no opinion on whether this level of ordinary skill is correct. Yet this level of ordinary skill in the art is quite low. At the time of the invention, OLED design was a unique, cross-disciplinary field, requiring expertise in chemistry, materials science, electronic devices, and optics. Large teams of scientists and engineers with advanced degrees, usually doctorate level, were required to develop materials, designs, and processes for advanced OLED devices.

32. Samsung's and Dr. Holmes's low level of ordinary skill would mean that a POSITA would not be motivated to or reasonable able to easily deviate from the express teachings in the prior art to extrapolate broader uses with a reasonable expectation of success. The theoretical basis and experimentation necessary to do

Pictiva EX2002
Samsung v Pictiva
IPR2026-00129

deviate from express teachings in the prior art would not be routine for one of this skill level.

33. Given my education and experience at the time, I was at least a person of ordinary skill in the art, if not one with above average skills, at the time of the invention.

D. Materials Relied on in Forming My Opinions

34. In forming my opinions expressed in this declaration, I have relied on my own knowledge, experience, and expertise, as well as the knowledge of a POSITA in the relevant timeframe. In addition, I have reviewed and relied upon the materials cited in this declaration.

IV. TECHNOLOGICAL BACKGROUND

35. A light emitting diode (LED) uses two semiconductor layers—one rich in electrons (n-type) and one rich in "holes" (*i.e.*, the absence of electrons) (p-type)—to form a junction where electrons and holes meet, recombine, and emit light when electricity is applied. This LED is a "diode" because electricity can only flow in one direction. And an LED is "light emitting" because electrons and holes enter this diode junction and recombine and their energy is released in the form of light.

36. Effective LEDs require that there are not energy barriers or energy traps in the path of the electrons or holes. So, the energy levels of any materials in

Pictiva EX2002
Samsung v Pictiva
IPR2026-00129

the along the paths of electrons and holes from the electrodes to the LED junction must be selected or engineered for suitable energy levels with respect to the LED junction. In addition, the injection of electrons and holes must be balanced such that the electrons and holes meet with similar quantities within the junction region of the LED. Excess holes or electrons will be unable to recombine to emit light and will find energy release pathways that damage the LED materials reducing the efficiency and lifetime of the LED. Electrons and holes that meet away from the junction may combine non-radiatively and also reduce efficiency and lifetime of the LED device.

37. An **O**LED is an LED with light emitted by organic (*i.e.*, carbon-containing) molecules. Generally, OLEDs are made of a series of thin, carbon-based semiconductor layers sandwiched between a cathode (the negative electrode) and an anode (the positive electrode). All of these layers are deposited on a substrate.

38. Applying a voltage across the anode and cathode, the electrons and holes travel into an emissive layer (where light is produced) and recombine. When a hole meets an electron, they form an "exciton" (an electron-hole pair), releasing energy in the form of light as the exciton decays. Excitons are either "triplet" or "singlet" excitons, formed in a ratio of 3 triplets for every 1 singlet (3:1).

Pictiva EX2002
Samsung v Pictiva
IPR2026-00129

39. Emitters can be fluorescent or phosphorescent. Fluorescent emitters primarily use the singlet excitons for emission as triplet excitons do not decay rapidly enough in fluorescent materials to emit light. A fluorescent emitter is only 25% efficient as a result as only 1 in 4 excitons decay to emit light. A phosphorescent emitter is significantly more efficient than a fluorescent emitter because the light emission is also caused by the triplet excitons in addition to the singlet excitons. In contrast to a fluorescent emitter, a phosphorescent emitter is theoretically 100% efficient.

40. There are variations of this basic layered OLED structure. Layers can be added to align energy levels, to improve conduction of the charge carriers (electrons or holes), or to create energy barriers for travel of electrons or holes beyond the junction or emission region.

41. The ’425 Patent illustrates one arrangement in Figure 1 with: (1) hole and electron transport layers to efficiently “transport[] the positive charge carriers”—holes—from the anode and “negative charge carriers—electrons—from the cathode” to the emission layer; and (2) electron and hole blocking layers to “prevent[] the penetration of electrons” from the emission layer into the hole transport layer and to “prevent[] the penetration of positive charge carriers into the adjoining electron transport layer,” respectively. ’425 patent at 24:33–62, Fig. 1.

Pictiva EX2002
Samsung v Pictiva
IPR2026-00129

anode (first electrode 101)	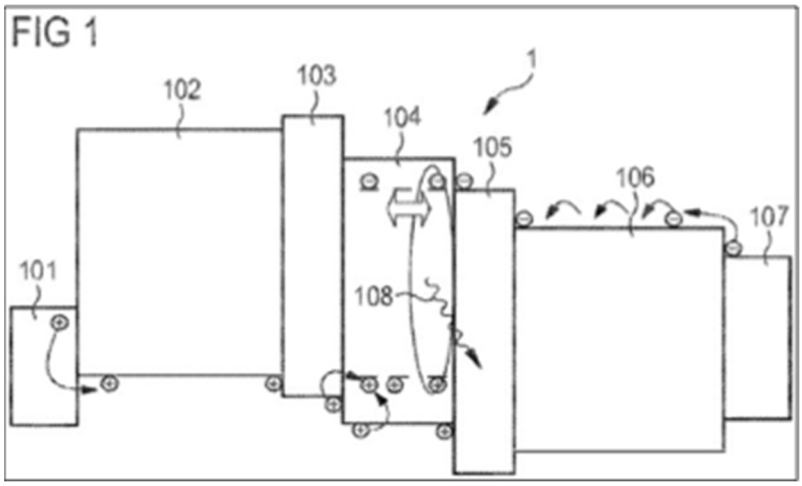
hole transport layer 102	
electron barrier layer 103	
radiation-emitting region 104	
hole barrier layer 105	
electron transport layer 106	
cathode (second electrode 107)	

42. Additional "injection" layers can be added to the cathode or anode to improve electron and hole injection into the transport layers. *E.g.*, '425 Patent at 28:16-18 ("In addition, the second electrode **107** can have, on a side facing the radiation-emitting region **104,** a layer comprising LiF, which has good electron injection properties.").

43. The '425 Patent claims are directed to an OLED device with an "iridium-containing compound." '425 Patent at 88:7-9. Iridium-based compounds are phosphors, where light emission involves a change in electron spin from the higher energy, excited state to a lower energy, ground state. This results in a lifetime from seconds to minutes, significantly longer than that for molecules undergoing fluorescence, which does not change in electron spin.

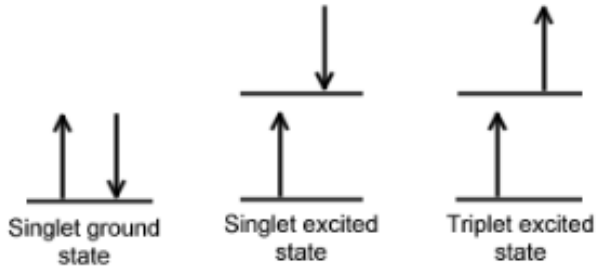

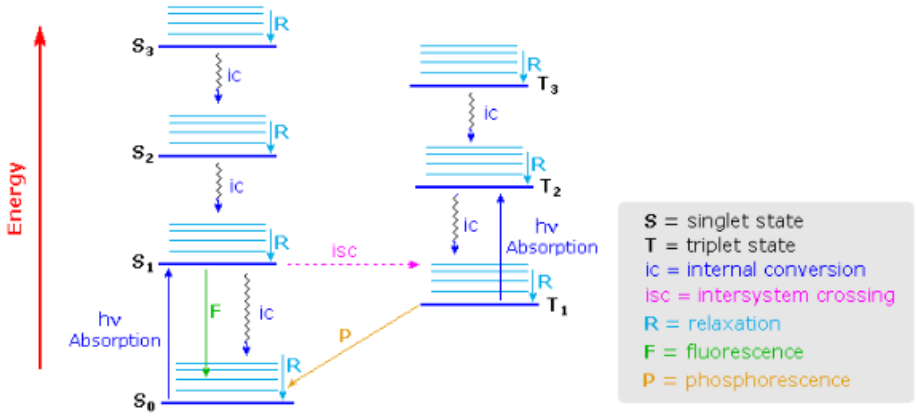

44. Material selections—especially for the emission layer and the layers immediately adjacent to the emission layer—are considerably different for a phosphorescent OLED than a fluorescent OLED. For the latter, the chosen materials must be carefully chosen not to quench the triplet excited state, which could then make the entire system unsuitable for OLED application.

V. OVERVIEW OF THE ALLEGED PRIOR ART

A. Diekmann (EX1004 & EX1005)

45. Diekmann describes an "an organic lighting device and lighting equipment with such a lighting device." Diekmann, 1. Figure 2A illustrates a series of OLED layers in Diekmannn:

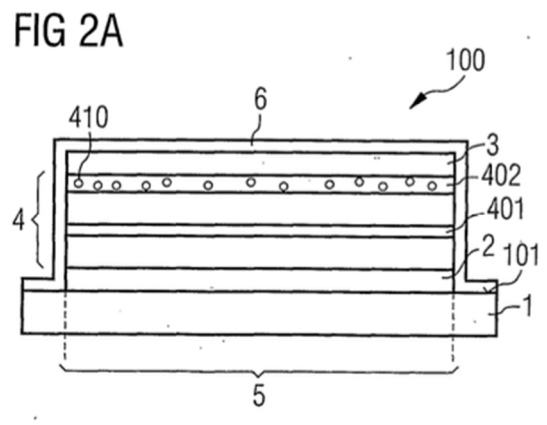	Thin-film encapsulation 6
	Second electrode 3 (cathode)
	Doped layer 402 with dopant 410
	Unlabeled Layer
	Layer 401 suitable for generating light
	Unlabeled layer
	First electrode 2 (anode)
	Substrate 1 with main surface 101

Diekmann, 91-92, Fig. 2A.

46. Diekmann's organic layer stack includes separate electron injection and transport layers. *See id.* at 4 ("the organic layer stack may comprise further organic layers, such as a hole-injecting layer, a hole-conducting layer, an electron-injecting layer and an electron-conducting layer"), 10 ("the doped organic layer forms an outermost layer of the organic layer stack, which particularly preferably forms a common interface with the respective electrode facing it"; "n-doped layer adjacent to the cathode, leads to better injection of electrons from the cathode into the organic layer stack.").

Pictiva EX2002
Samsung v Pictiva
IPR2026-00129

47. Diekmann lists its "electron-conducting layer" materials as "Alq3," "BAlq," "TPBi." *Id.* at 5.

48. Diekmann identifies its "electron injection layer" as containing at least one of an organic material NET-5 with NDN-1 and inorganic materials cesium carbonate ("Cs2CO3,"), lithium or sodium fluoride ("LiF", "NaF"), and barium ("Ba"). Diekmann, at 5.

49. NET-5 with NDN-1 is referring to a doped injection layer. *See* EX1029 at 7 (listing NDN-1 as an n-dopant).

50. Diekmann further discloses:

> [T]he organic layer stack comprises a doped organic layer with a dopant, which is arranged between the at least one organic layer suitable for generating light and one of the electrodes. Particularly preferably, the doped organic layer forms an outermost layer of the organic layer stack, which particularly preferably forms a common interface with the respective electrode facing it. electrode facing it.
>
> …
>
> [D]oping advantageously increases the conductivity of the doped organic layer and, in the case of an n-doped layer adjacent to the cathode, leads to better injection of electrons from the cathode into the organic layer stack ... Preferred n-dopants are cesium, barium and lithium fluoride.
>
> …
>
> On its outer side facing the cathode, the organic layer stack 4 has a doped layer 402 with a dopant 410, which acts as an electron donor. This advantageously increases the injection of electrons from the cathode into the organic layer stack. The dopant 410 can be for example cesium, barium or lithium fluoride.

Pictiva EX2002
Samsung v Pictiva
IPR2026-00129

Id. at 10, 91.

51. Doped layer 402, lying next to the cathode, is expressly designed to improve electron ***injection.*** Diekmann, 91 ("dopant 410, which acts as an electron donor" … "advantageously increases the ***injection*** of electrons from the cathode into the organic layer stack."); *see id.*, 10 ("in the case of an n-doped layer adjacent to the cathode," doping "leads to better ***injection*** of electrons from the cathode into the organic layer stack.").

52. The location of doped layer 402 in Figure 2A shows that doped layer 402 abuts the electrode 3 and there is another layer between doped layer 402 and the light generating layer 401 that would have been understood to be the conducting layer:

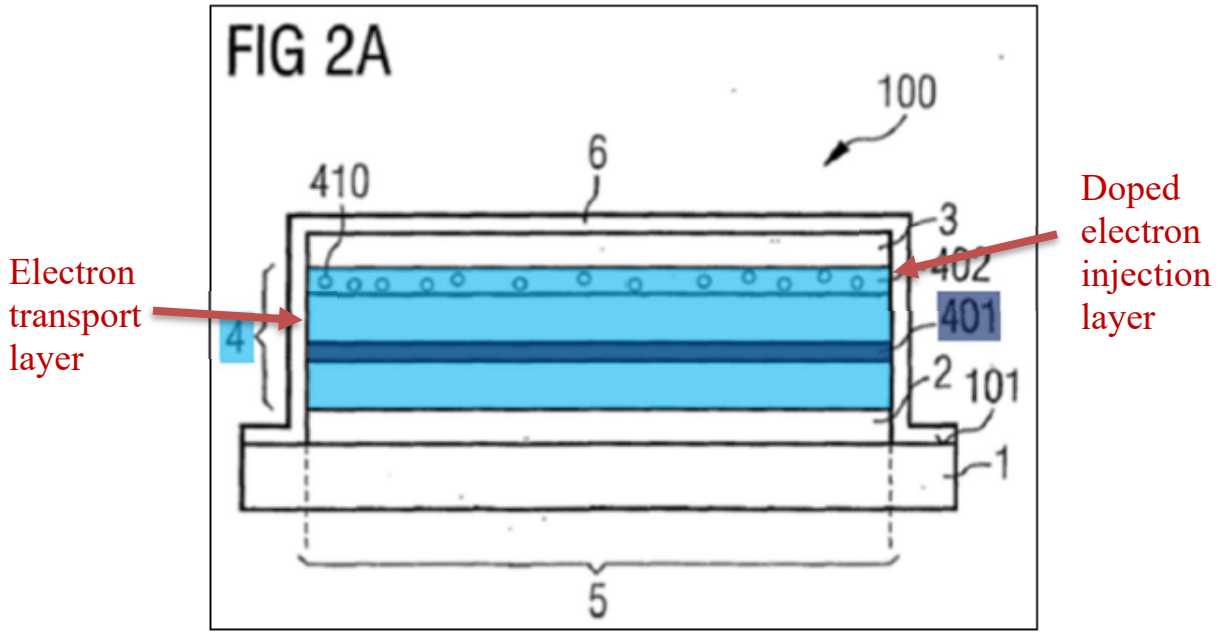

Diekmann, Fig. 2A (red annotations added; *see* Pet. 23 (adding blue annotations)).

53. Relative to the cathode, a POSITA would have understood that the electron injection layer abuts the cathode and, next, the electron transport layer abuts the emissive layer. *See* EX1003, Fig. 3(a) (illustrating this arrangement, discussed below).

54. Aside from an electron injection layer and an electron conducting layer, Diekmann does not describe any other possible layers between the electrode and the emissive layer (*e.g.*, a hole barrier layer 105 as in the '425 Patent, Fig. 1, 24:55–62).

55. This arrangement is shown in the figure provided by Dr. Holmes when compared to Diekmann Figure 2A:

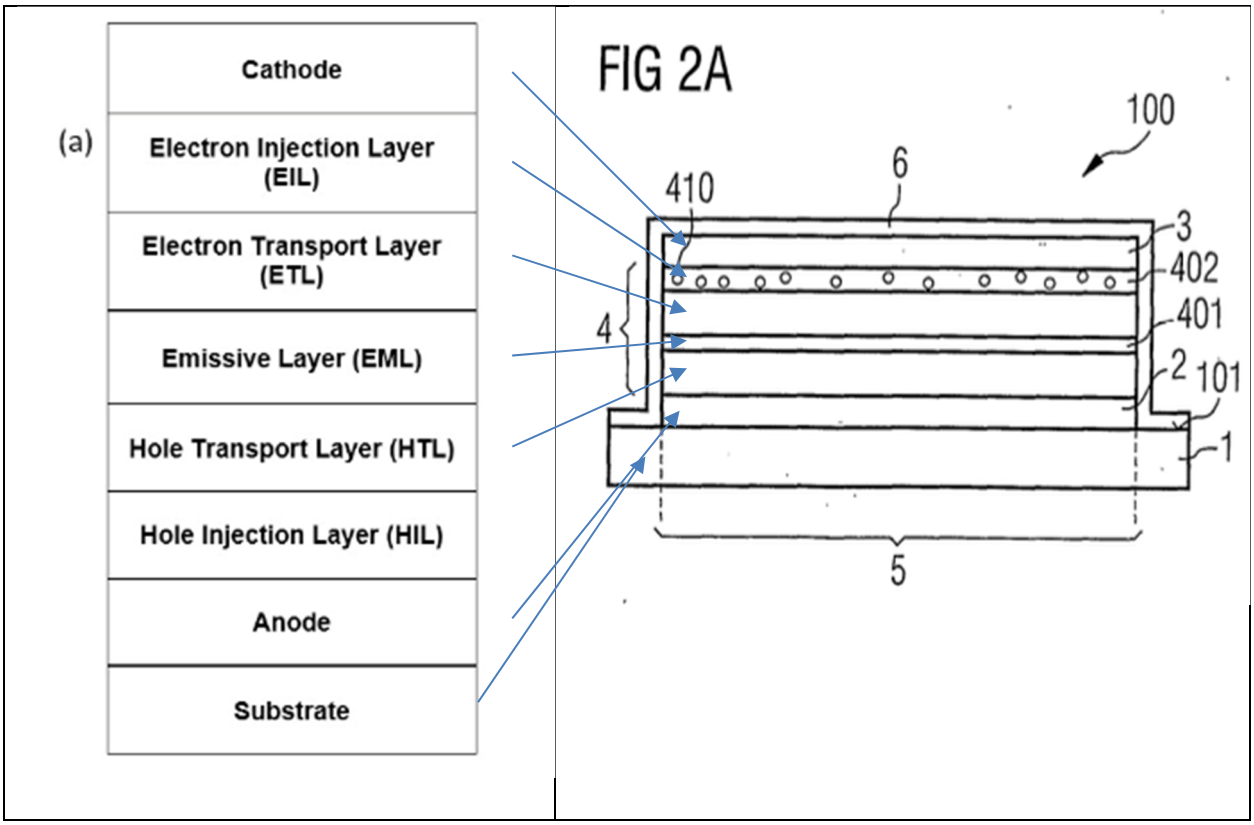

EX 1003, Fig. 3(a), ¶ 34; Diekmann, Fig. 2A (annotations added).

56. A POSITA would understand from these disclosures and the fact that another layer separates layer 402 and the emission layer 401 that layer 402 is an electron injection layer while the unlabeled layer between layers 401 and 402 are an electron-transport layer.

57. A skilled artisan would understand that doped layer 402 is thus describing an electron injection layer, not an electron transport layer given its location and express purpose of increasing injection.

B. Suzuki (EX1006 & EX1007)

58. Suzuki describes bottom emitting "organic electroluminescent device" with a "gas barrier resin substrate material." Suzuki, ¶ [0001]. Samsung relies primarily on Figure 9 and the accompanying description in paragraph 274:

<table>
<tr><td rowspan="8"> 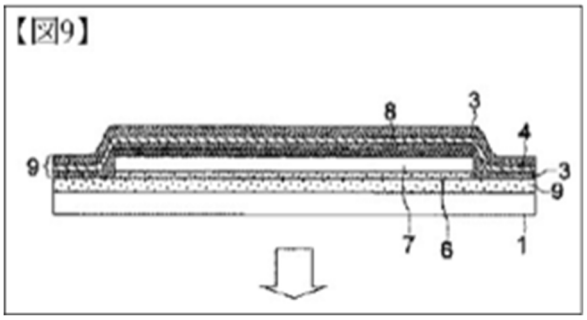
</td><td rowspan="3">Thin film laminate 9</td><td>Buffer film 3</td></tr>
<tr><td>Barrier film 4</td></tr>
<tr><td>Buffer film 3</td></tr>
<tr><td colspan="2">Cathode 8</td></tr>
<tr><td>Organic layer 7</td><td>"comprising a hole transport layer, a light emission layer, an electron transport layer, and the like"</td></tr>
<tr><td colspan="2">Anode 6</td></tr>
<tr><td colspan="2">Thin film laminate 9</td></tr>
<tr><td colspan="2">Resin substrate 1</td></tr>
</table>

Pictiva EX2002
Samsung v Pictiva
IPR2026-00129

Id., Fig. 9, ¶ [0274]. Suzuki also discloses using electron injection layers next to the cathode, such as a layer of LiF. *Id.*, ¶¶ [0295], [0338].

59. Suzuki then describes that "an electron transport layer with a high n nature doped with impurities." *Id.*, ¶ [0333]. Suzuki does not say that the ETL has been ***n-doped***. A POSITA would have understood that this meant a material with an already "high n nature" is then "doped with impurities." Because an ETL is for transporting negative charge carriers (electrons), ETL materials tend to have a high n (or negative charge) characteristic. That is because electron transport requires both a high number of electrons in the ETL and good electron mobility. Thus, if there are no electrons in the material, there would be no electron transport. This material with n characteristic may be then doped.

60. Here, a "high n nature" simply means that it is a material with a high electron (negative charge carrier) transport capability. But that does not necessarily mean the high n nature is derived from the doped impurities. A POSITA would have been well-aware of impurity doping for other reasons than n-type doping, such as colorant dopants, hole trapping, or hole blocking doping. *E.g.*, EX1013 (Baldo 1998) at 151 (doping a phosphorescent dye (PtOEP) into an Alq3 "electron transport material" for red coloring); EX2008 (Adamovich 2003), Abstract (doping a combined "hole blocking and electron transport layer"), 82 (doping FIrpic into wide gap matrix to block holes). Hole blocking or trapping is

Pictiva EX2002
Samsung v Pictiva
IPR2026-00129

particularly important, as it can prevent hole leakage from the EML into the adjacent layers, which may then upset hole-electron balance, damage the device, and significantly degrade device performance.

C. Ma (EX1010)

61. Ma describes an Alq_3-based fluorescent OLED stack using both "8-hydroxy-quinolinato lithium doped 4'7-diphyenyl-1,10-phenanthroline as [the] electron transport layer (ETL)" (Liq-doped Bphen) and "[t]etrafluro-tetracyano-quinodimethane doped 4,4′,4″-tris(3-methylphenylphenylam[i]no)triphenylamine as hole transport layer (HTL)" (F_4-TCNQ doped *m*-MTDATA). Ma, Abstract.

62. Ma admits that "no work" had previously been done on Liq as a dopant for an ETL based on Bphen. *Id.* at 810.

63. Ma compares "[t]he conductivity of [those] carrier transport layers with different doping concentration[s]." *Id.*, Abstract. Ma's results are then "[c]ompared with the referenced device (without doping)" to show a "current efficiency and power efficiency." *Id.*

64. The specific devices fabricated in Ma are compared by varying the doping ratios "x" and "y" within the specific layered arrangements (Ma, 811):

	Complete Device
Anode	ITO
HTL	*m*-MTDATA: x wt.% F_4-TCNQ (40nm)
Interlayer	NPB (10nm)

Pictiva EX2002
Samsung v Pictiva
IPR2026-00129

Emission layer	Alq_3 (20 nm)
ETL	BPhen:y wt.% Liq (50 nm)
EIL	LiF (1 nm)
Cathode	Al (130nm)

65. Ma repeatedly emphasizes the need for maintaining "efficient charge balance in the emission zone" for its reportedly improved efficiency. *Id.*, Abstract, 812 ("[t]he high carrier balance is reached in the emission zone, which leads to the enhanced current and power efficiency at low driving voltage"), 813 ("current efficiency" depends "on the carrier balance"), 814 (discussing "good balance" between electrons and holes with "efficient charge balance" in the emission layer). This "good carrier balance" is "one of the most important factors in getting excellent performance in OLEDs." *Id.* at 814. In Ma, that balance is tailored to a fluorescent emission zone material using Alq_3 and the specific layer materials for the injection and transport layers surrounding that zone.

66. Alq_3 emission material was used in the seminal OLED reference, cited by Ma as reference 1 from 1987. As evidenced by Diekmann and Suzuki this material was no longer being considered for commercial grade OLED devices, having been surpassed in performance by phosphorescent emitters, but was rather a research grade material that was easy to work with and somewhat useful for researching basic OLED materials and device physics within the context of Alq_3-based devices. The charge balance, balance of energy levels, and conduction

Pictiva EX2002
Samsung v Pictiva
IPR2026-00129

requirements would be very different for a basic fluorescent monochromatic Alq_3 device compared to a state of the art, multi-emitter and phosphorescent device structure at the time of filing of the ’425 Patent. In addition, the operating voltages described by Ma, which are a function of the device structure and charge injection and transport layers, are too high to be relevant to any practical OLED device application since they represent a significant efficiency loss.

67. Ma’s results focused on a “33 wt.% ratio” of Liq to BPhen for the electron transport layer with a “0wt.%, 0.3wt.%, 2wt.% and 4wt.%” ratio of F_4-TCNQ to *m*-MTDATA for the hole transport layer. *Id.* at 810-811, 814. Ma makes no general statement about doping any other materials besides BPhen with Liq or with different layers besides fluorescent Alq_3 as the emission zone materials.

VI. A POSITA WOULD NOT HAVE USED LIQ AS A ETL DOPANT IN DIEKMANN OR SUZUKI

68. I have been asked to comment on Samsung’s position that a POSITA would “use 8-hydroxyquinolinolato-lithium as [a] dopant” in either Diekmann’s or Suzuki’s electron transport layers based on Ma (EX1018) at the time of filing the ’425 Patent. Pet. 36-38, 69-70.

69. To summarize, I disagree that a POSITA—as defined by Samsung and Dr. Holmes—would have been motivated to combine either Diekmann or Suzuki with Ma and reasonably expected success in doing so at the time of filing the ’425 Patent.

Pictiva EX2002
Samsung v Pictiva
IPR2026-00129

70. I express no opinion on whether Ma qualifies as prior art to the ’425 Patent. For the purposes of this analysis, I merely assume Ma is prior art to the ’425 Patent. Prior to this proceeding, I have not seen Ma (EX1018), despite being active in the OLED industry at the time of its alleged publication.

71. At a high level: (1) Samsung’s stated reasoning does not explain why a POSITA would use Liq with either Diekman’s or Suzuki’s ETL with a reasonable expectation of success; (2) Ma does not provide a general motivation to dope every ETL with Liq at the time of filing the ’425 Patent; (3) the use of Liq as a dopant was experimental and only shown to operate in a BPhen matrix with an Alq_3 emissive layer—a known stack for a fluorescent OLED device; and (4) there was unpredictability and technical and compatibility issues with attempting to use an unproven dopant. Therefore, a POSITA, particularly as described by Samsung and Holmes, would neither have doped Diekmann’s or Suzuki’s phosphorescent OLED ETL layers with Liq nor reasonably expected success in doing so.

A. Samsung and Dr. Holmes Provide No Reason for Why a POSITA Would Use Liq in Diekman’s or Suzuki’s ETL With a Reasonable Expectation of Success

72. For ease of reference, I copy Samsung’s entire analysis of Ma:

> Ma teaches an OLED with an electron transport layer doped with 8-hydroxy-quinolinatolithium (“Liq”). Ma, Abstract, 810-811.
>
> A POSITA would have been motivated to use an Liq-doped electron transport layer in the organic layer stack of Diekmann due to the known benefits of an Liq-doped electron transport layer. Ex.1003,

Pictiva EX2002
Samsung v Pictiva
IPR2026-00129

¶¶140-143. As Ma explains, "[s]ince the discovery of organic light-emitting devices (OLEDs), there has been a considerable interest in developing OLEDs with high efficiency." Ma, 810. "In order to lower driving voltage and enhance power efficiency, it is critical to enhance the carrier injection from the electrode to the transporting layer and to increase the transport conductivity." *Id.* Ma teaches that a "doping concentration of the Liq" in the electron transport layer results in increased current density and reduced driving voltage, compared to the undoped device. *Id.,* 813. Ma further teaches that "a certain doping ratio of Liq to Bphen can improve the electron transport ability of the co-deposited layer." *Id.*

Moreover, Diekmann teaches that the n-dopant for its electron transport layer should be "suitable for emitting electrons" and "preferably has a low diffusion constant within the organic layer stack, as is usually the case with large atoms or molecules, for example." Diekmann, 10. Liq was known to have good electron injection and transport properties and has a larger molecular weight than Diekmann's preferred n-dopants (cesium, barium, and lithium fluoride). See Ex.1003, ¶¶144-145; *see also* Ex.1031, 4495; Ex.1018. A POSITA thus would have recognized that Liq would be an advantageous dopant for Diekmann's doped layer. Ex.1003, ¶144.

A POSITA would also have reasonably expected success in implementing Liq as the dopant in the n-doped electron transport layer in Diekmann's OLED. Ex.1003, ¶¶145-146. Doing so would be a routine practice for a POSITA to implement with a high probability of success, particularly as Diekmann already contemplates an n-doped electron transport layer. Ex.1003, ¶145.

73. For Suzuki, Samsung similarly contends:

It would have been obvious to a POSITA to use 8-hydroxyquinolinolato-lithium ("Liq") as the dopant in Suzuki's n-doped electron transport layer which, as discussed above in §VIII.B.1, is taught by Ma. Ma, Abstract, 810-811; Ex.1003, ¶224.

A POSITA would have been motivated to use an Liq-doped electron transport layer of Ma in the organic layer stack of Suzuki due to the known benefits of an Liq- doped electron transport layer, discussed above in §VIII.B.1. Ex.1003, ¶¶32-42, 225-228. A POSITA would

Pictiva EX2002
Samsung v Pictiva
IPR2026-00129

> have reasonably expected success in using an Liq-doped electron transport layer in Suzuki's OLED for the same reasons discussed above with regards to Diekmann's OLED. Ex.1003, ¶¶225-228. Moreover, Suzuki already contemplates an n-doped electron transport layer, so using an Liq-doped electron transport layer merely involves using a different dopant. This would be a routine matter well within the ability of a POSITA. Ex.1003, ¶228.

74. Samsung's only evidence that there were "known" benefits for a Liq-doped electron transport layer is its expert, Dr. Holmes. Pet. 37-38, 70. Dr. Holmes, however, merely repeats Samsung's argument without support or further explanation:

> The use of Liq-doped electron transport layers in OLEDs was a well-known practice in the art at the time, and had well-known benefits. See §V.A.4 above.

See EX1003, ¶¶140, 145, 225. I note that Dr. Holmes in these sections does not explain what the purported "well-known benefits" were in doping an ETL with Liq in this section beyond a vague reference to "improve the performance" and, in his later discussion, "achieving … efficiency." EX1003, ¶¶ 42, 140, 225.

75. In the cited background discussion from Dr. Holmes in Section V.A.4, the only mention of using Liq as a potential dopant in any ETL was from Ma's doping Liq into Bphen:

> 42 … In a 2008 paper, Ma et al. similarly used doped transport layers to improve the performance of an OLED, by using a p-doped hole transport layer (doped with p- dopant F4-TCNQ) and an n-doped electron transport layer (doped with n-dopant Liq). Ex. 1010 (Ma). Ma et al.'s work shows that the community was also actively working

Pictiva EX2002
Samsung v Pictiva
IPR2026-00129

> on molecular dopants containing lithium (for example, Liq) to increase the conductivity of electron transporting layers in OLEDs.

76. But citing only to Ma does not show that Ma's supposed teachings of were "well known," "community" work before the filing of the '425 Patent, as Dr. Holmes states. On the contrary, Ma acknowledges in its introduction that ***"[n]o work has been reported about using Liq-doped BPhen as electron transport layer***." Ma at 810.

77. For Diekmann, Samsung and Dr. Holmes cites Liu (EX1018) as evidence of Liq's "well-known … electron injection and transport properties." Pet. Pet. 37; EX1003, ¶144. There is no pin-cite or explanation of this citation. I disagree that Liq had well-known electron injection and transport properties as a dopant at the time of filing and see no evidence to the contrary in the record. To illustrate, Liu was discussing using Liq as an electron injection layer, not a ETL dopant:

> ***Lithium quinolate (Liq),*** covered with aluminium, ***was used as an electron injection layer*** in a double layer organic light emitting diode consisting of NPD as the hole transport layer and Alq as the emitting layer resulting in lower turn on voltage and increased power efficiency. The driving voltage required to achieve a luminance of 100 cd/m decreased from 5.8 V for the Ca/Al to 4.2 V when Liq/Al was used, improving device power efficiency from 2.3 to 4.1 lm/W. The performance tolerance to layer thickness of Liq devices is also better than that of the devices with lithium fluoride /LiF). Due to the highly insulating nature of LiF, it can only be used when deposited as an ultra-thin layer, while the Liq can be deposited into layers as thick as 5 nm without significantly affecting the EL properties. An Liq electron injecting layer has also been tried in combination with Ca,

Pictiva EX2002
Samsung v Pictiva
IPR2026-00129

> Mg and Ag cathodes. Our experiments support the assumption that free lithium is released from lithium quinolate, as in the case of lithium fluoride, when Liq is over coated with active metals such as Al.

EX1018, Abstract. Like Ma (Ma, 810), Liu also notes that Liq "has not yet been widely investigated." EX1018 at 211.

78. And his conclusion that a "POSITA thus would have recognized that Liq would be an advantageous dopant for Diekmann's doped layer" lacks explanation for why a POSITA would have specifically used Liq. EX1003, ¶ 144. As I explain below, a POSITA would not have used Liq as an ETL dopant in Diekmann or Suzuki.

79. While Dr. Holmes states that "[a]t the time, it was well understood that dopant metal ions could readily diffuse in the OLED during film growth and operation, compromising performance" and that "[a] larger, molecular dopant would be less able to diffuse in the transport layer, reducing the severity of these issues," he cites no support for this statement. EX1003, ¶ 144.

80. While Diekmann states "the dopant preferably has a low diffusion constant within the organic layer stack, as is usually the case with large atoms or molecules, for example," (EX1003, ¶ 144 (quoting Diekmann, 10)), Diekmann's preferred dopants are cesium, barium, and LiF. Each of these materials has a low diffusion and sufficient size to be preferred in Diekmann:

Pictiva EX2002
Samsung v Pictiva
IPR2026-00129

> **Diekmann 10:** Preferably, the dopant of the doped layer is as large as possible atoms or molecules, which in the case of an n-dopant are suitable for emitting electrons ... Furthermore, the dopant preferably has a ***low diffusion constant*** within the organic layer stack, as is usually the case with ***large atoms or molecules***, for example. … ***Preferred n-dopants are cesium, barium and lithium fluoride.***
>
> **Diekmann 34:** … The outermost organic layer is doped with a dopant. Preferably, the dopant of the doped layer - as described above - is as ***large as possible atoms or molecules***, which are suitable for emitting electrons in the case of an n-dopant and for emitting holes in the case of a p-dopant. Furthermore, the dopant preferably has a ***low diffusion constant*** within the organic layer stack, as is usually the case with large atoms or molecules, for example. ***Cesium, for example, is a particularly suitable dopant***
>
> **Diekmann 119:** The outermost organic layer is doped with a dopant 410. Preferably, the dopant 410 of the doped layer comprises – as explained above - atoms or molecules which are as large as possible and which are suitable for emitting electrons - n-dopant - or holes - p-dopant. Furthermore, the dopant has a low diffusion constant within the organic layer stack 4. For this purpose, the dopant is formed from the largest possible atoms or molecules. Cesium, for example, proves to be a suitable dopant.

Diekmann, 10, 34, 119; *see id.*, 91 ("The dopant 410 can be for example cesium, barium or lithium fluoride.").

81. Cesium and barium are large row 6 main group metals. And LiF, although composed of the smallest metal cation Li^+ and smallest anion F^-, has a cubic crystal structure in which Li+ is bonded by six equivalent F- to form a mixture of corner and edge sharing LiF_6 octahedra as shown below. This reduces the diffusion rate of Li+ and F-.

Pictiva EX2002
Samsung v Pictiva
IPR2026-00129

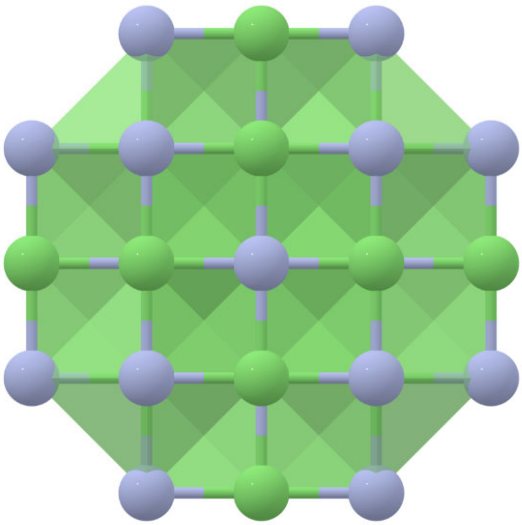

82. While Liq might have a larger molecular weight, that does not mean that Liq would have been recognized by a POSITA at the time as suitable as a dopant with low diffusion rate in Diekmann's OLED device over cesium, barium, and LiF. For instance, there is no explanation why the small Li+ cation in Liq would not dissociate from the hydroquinolate anion and diffuse through the organic layers to wreak havoc on the device. Neither Samsung nor Dr. Holmes provide any explanation for why a POSITA would use Liq in lieu of these already low-diffusion constant, large atom/molecule dopants already in Diekmann.

83. In addition, Diekmann specifies three materials for its electron conducting layer:

> For example, the electron-conducting layer contains or consists of at least one of the following materials:
>
> - Alq3 = Tris(8-hydroxychinolin)aluminium

- BAlq = Bis-(2-methyl-8-chinolinolate)-4-(phenylphenolato)aluminium

- TPBi = 1,3,5-Tris-(l-phenyl-lH-benzimidazol-2-yl)-benzol.

Diekmann, 5. Diekmann neither suggests doping Alq_3, Balq or TPBi nor suggests replacing these ETL materials with BPhen. I have seen no reason offered by Samsung or Dr. Holmes to substitute Bphen in Diekmann's system.

84. Finally, for an expectation of success, Samsung and Dr. Holmes conclude that using Liq as a dopant in an OLED electron transport layer was a "routine" with a "high probability of success" given Diekmann and Suzuki contemplated an "n-doped electron transport layer." Pet. 38, 70 (citing EX1003, 145-146, 225-228). I disagree. There was nothing routine about using a novel, untested dopant in an entirely different system, as I explain below. And Samsung does not explain why a POSITA, with their low level of skill, would expect success in using ***Liq*** specifically as a dopant in either Diekmann or Suzuki. Dr. Holmes similarly provides no explanation for how attempting to use a new, specific Liq dopant in a different host in a different device structure than Ma is "routine" with a "high probability of success" for his definition of a POSITA. EX1003, ¶¶ 145, 228

85. As explained below, using a novel and unproven Liq dopant on a different OLED stack for a different emissive material would have hardly been

Pictiva EX2002
Samsung v Pictiva
IPR2026-00129

routine for such an ordinary skilled artisan and Samsung and Dr. Holmes provide no evidence on why a POSITA would have replaced the listed dopants in Diekmann with Liq or why Liq would be used in Suzuki as an impurity dopant in Suzuki's already high-n nature ETL.

B. Ma Does Not Provide a Motivation to Dope Every ETL with Liq

86. In my opinion, no POSITA would have understood Ma to teach doping every ETL in every OLED stack with Liq for "performance," "efficiency," or any other reason as Samsung offers.

87. While Samsung and Dr. Holmes both cite Ma's background statement that there was an "interest in developing OLEDs with high efficiency." Pet. 37 (quoting Ma at 810); EX1003, 140 (same), 225 (same). This interest could only be taken within the context of improving the very low efficiency of Alq_3 emitter-based devices, which have low internal quantum efficiency and high voltages which result in undesirable monochromatic device operation that is much less efficient than state of the art OLED structures. In addition, this says nothing about using ***Liq*** as a general ETL dopant. Nor does this show that using Liq as an ETL dopant in Diekmann's or Suzuki's OLED stack would have been reasonably expected to result in high efficiency in an entirely different system.

88. To a POSITA, Ma narrowly describes an improvement to a known, stable, and undoped fluorescent OLED stack:

Pictiva EX2002
Samsung v Pictiva
IPR2026-00129

Compared to the referenced device (without doping)….

1. Introduction

…

In this paper, we have demonstrated a device with an new n-doping (33wt.% Liq:BPhen) layer as ETL and p-type (*m*- MTDATA:*x* wt.% F_4-TCNQ) layer as HTL. Here, 33 wt.% Liq is chosen due to the fact that the device with the doping ratio of 33 wt.% Liq demonstrates the best current density vs voltage (*J–V*) curve among all the electron only devices. Using this method, we obtained a significant improvement in the device performance ***as compared with the referenced device.***

2. Experiments

The structure of the complete devices fabricated in this work is as follows:

ITO/*m*-MTDATA:*x* wt.% F_4-TCNQ (40jnm)/NPB (10nm)/Alq3 (20 nm)/ BPhen:*y* wt.% Liq (50 nm)/LiF (1 nm)/ Al (130 nm). *Device A (referenced device)*: $x = 0$, $y = 0$; *Device B*: $x = 0$, $y = 33$; *Device C*: x=0.3, y=33; *Device D*: x=2, y=33; *Device E*: x=4, y=33.

In the devices, 4,4′,4″-tris(3-methylphenylphenylamono) triphenylamine (*m*-MTDATA):*x* wt.% etrafluro-tetracyano-quino-dimethane (F_4-TCNQ)and Bphen:*y*wt.% Liq are used as p-doping HTL and n-doping (ETL), respectively. *N*,*N*′-diphenyl-*N*, *N*′-bis(1,1′-biphenyl)-4,4′-diamine (NPB) and Alq_3 are used as interlayer and emission layer (EML), respectively, while LiF and Al are used as electron injection layer and cathode, respectively.

Ma, Abstract, 810–811.

89. No POSITA would have understood Ma to suggest Liq is a panacea dopant for all OLED systems. Instead, a POSITA would have understood that Ma's improved performance is specific to the BPhen host and specific to this

Pictiva EX2002
Samsung v Pictiva
IPR2026-00129

specific OLED stack and only in comparison to a device with an undoped version of its OLED stack, as explained further below.

90. As Ma explains:

> Many attempts have been made to improve the electron injection and transport, including using low work function metals [1,13–15] as cathode, or inserting a thin interlayer between cathode and electron transporting layer [16–20] to enhance electron injection. Great efforts have been made to enhance the electron conductivity [21–24]. Kido and Matsumoto [22] reported the improved electron transport by doping Li into tris(8-hydroxyquinoline) aluminum (Alq_3). Fong et al. [21] also demonstrated that the device performance was enhanced significantly by doping 4′7-diphyenyl-1, 10-phenanthroline (Bphen) into Alq_3 as a cohost electron transport layer (c-ETL). However, ***few studies have been reported about using lithium quinolinato complex such as 8-hydroxy-quinolinato lithium (Liq) as an electron injection layer*** [25], and ***no work has yet been reported about using Liq-doped BPhen as electron transport layer (ETL)***.

Ma, 810 (emphasis added).

91. From this passage, Ma is clear that "no work" had been previously reported on Liq doping an ETL in any form prior to Ma. Ma, 810. Ma admits it builds off prior efforts to "improve electron injection and transport" of doping an emissive layer, Alq3, with lithium (Li) or Bphen. *Id.* Yet Ma admits that there were only a "few studies" about Liq even as a separate electron injection layer. *Id.* Samsung and Dr. Holmes ignore this key context.

92. A POSITA would understand only that Ma is describing doping Bphen with Liq alongside doping *m*-MTDATA with F_4-TCNQ surrounding its Alq_3 emission layer:

Pictiva EX2002
Samsung v Pictiva
IPR2026-00129

Anode	ITO
HTL	m-MTDATA (40nm)
Interlayer	NPB (10nm)
Emission layer	Alq3 (20 nm)
ETL	BPhen (50 nm)
EIL	LiF (1 nm)
Cathode	Al (130nm)

Ma, Abstract, 810-811. Ma specifically proposes heavily doping Bphen with Liq in this stack. *Id.*

93. Ma seeks to find the optimal dopant levels for correcting a known charge imbalance in this specific stack, testing power efficiency by comparing this prior undoped system to its dual doped variations.

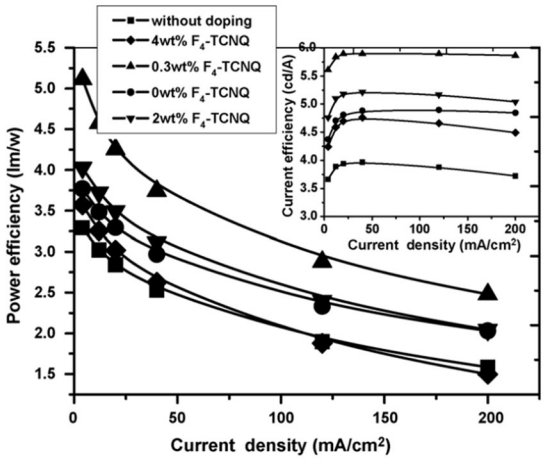

Fig. 3. Power efficiency vs current density characteristics of the complete devices. Inset: Current efficiency – current density characteristics of the complete devices.

Ma, Fig. 3.

94. Ma's ultimate conclusion about performance enhancement is expressly tied, though, to the specific layer materials, widths, and doping

Pictiva EX2002
Samsung v Pictiva
IPR2026-00129

concentrations of its *m*-MTDATA and Bphen layers as used in this simplified, fluorescent Alq_3-based stack. To illustrate, Ma expressly concludes, based on this testing, that:

> This significant enhancement in the device performance is attributed to the improved transport conductivity of both p-doped HTL and n-doped ETL at a particular doping concentration of F4-TCNQ into *m*-MTDATA and Liq into Bphen.

Ma, 812.

95. Ma tied the performance improvement to a specific synergy in the Liq and Bphen combination. Specifically, the "certain doping ratio of Liq to Bphen can improve the electron transport ability of the co-deposited layer" in Ma's Alq_3-based stack:

> These *J–V* characteristics of electron-only devices suggest that ***a certain doping ratio of Liq to Bphen can improve the electron transport ability of the co-deposited layer.*** The advantage of using BPhen:Liq as ETL can be explained by electron hopping exchange along with their LUMO. In a single host device, electrons hop along the LUMO in BPhen. Since the LUMO–LUMO difference between BPhen (3.0 eV) [29] and Liq (3.1 eV) [28] is neglectable, subject to their similar LUMO. Transport manifolds along with their LUMO are expected to exhibit a certain extent of overlap after a mixing ratio goes beyond 17wt.%. Therefore, it's likely that a large energetic disorder between Bphen and Liq contributes to electron hopping, implying that electron hopping among BPhen and Liq sites is favorable [29]. Therefore, the high electron conductivity of BPhen:Liq may be originated from short hopping length for electron transport, compared to the pure BPhen HTL. However, the current conduction is reduced slightly as the doping ratio further increases to 50 wt.%. This result may be attributed to the effect of carrier quench and generation of defects.

Ma, 813.

Pictiva EX2002
Samsung v Pictiva
IPR2026-00129

96. A skilled artisan would have understood that the performance enhancement is thus tied to the specific layers with the specific dopants in an Alq_3-based fluorescent stack. A POSITA with merely a bachelor's degree in physics or chemistry and 3 years of industry experience would not read Ma any broader.

97. Contrary to Dr. Holmes, Ma does not describe that "current and power efficiency of an OLED can be increased at a low driving voltage by utilizing an ETL which is doped with Liq" or that doping with Liq in the ETL "results in increased current density and reduced driving voltage, compared to the undoped OLED." EX1003, ¶¶ 142-143, 225-226 (citing Ma, 812-813). I do not see such general propositions for doping any ETL with Liq anywhere in Ma.

98. Ma also states that its doping was to correct a hole surplus in its known, undoped device:

> For the stability of the devices, we have known that in un-doping devices, such as *Device A* [(the reference device)], the number of holes is much more than electrons. So, a surplus of holes at the NPB/Alq3 interface increases the probability that Alq3 cations are formed, which are known to be unstable and lead to rapid device degradation.

Ma, 814. This is why Ma proposed doping its Bphen layer with Liq and its *m*-MTDATA layer with F_4-TCNQ—to achieve a "good balance" between holes and electrons and "decrease the surplus of holes":

> [I]n this paper, we introduce a p–i–n devices with a novel n-doping (33wt.% Liq:BPhen) layer as ETL and a p-doped (0wt.%, 0.3wt.%, 2 wt.% and 4 wt.% F4 -TCNQ:m-MTDATA) layer as HTL, in which

Pictiva EX2002
Samsung v Pictiva
IPR2026-00129

> the holes and electrons have a good balance seen from Fig. 6, leading to the decrease in surplus of holes.

Id. I have seen no evidence that Diekmann or Suzuki has that hole imbalance to begin with.

99. To illustrate, unlike Ma, there is no NPB/Alq3 interface in Diekmann. For instance, in Diekmann, the hole conducting layer (such as aNPB, *see* Diekmann at 4) is separated from the electron transport layer (such as Alq_3, *see* Diekmann at 5) by at least the emissive layer:

> The organic layer, which is suitable for generating light, is preferably arranged between the hole-conducting layer and the hole-injecting layer on one side and the electron-conducting layer and the electron-injecting layer on the other side. As a rule, the organic materials are translucent, in particular for light emitted by the organic layer stack.

Diekmann, 4; *see generally* EX1003, Fig. 3(a), ¶ 34 (Dr. Holmes illustrating and discussing OLED layers). A skilled artisan would understand that Ma's observation about preventing a hole surplus at the NPB/Alq_3 interface cannot be readily applied to Diekmann as there is no NPB/Alq_3 interface and BPhen was not even mentioned as a potential ETL matrix material. *See* Diekmann at 5 (listing Alq_3, BAlq and TPBi as the ETL material).

C. The Use of Liq as an ETL Dopant Was Experimental for Limited Use in Stable, Fluorescent OLED Devices with Bphen at the Time

100. Neither Diekmann nor Suzuki mention using Liq as an ETL n-dopant or otherwise. This is because Liq as an ETL dopant was experimental at the time.

Pictiva EX2002
Samsung v Pictiva
IPR2026-00129

101. As Ma's limited use shows, Liq was only starting to be tested in single, very specific and known fluorescent Alq_3-based OLED stack as a dopant for Bphen. Given the early stages of this research into Liq, a POSITA armed with only a bachelors in physics or chemistry and three years of experience would not and could not just swap materials or dopants into an entirely different stack with a reasonable expectation of success. That skilled artisan simply lacks the experience and expertise to do so and such efforts would require significant experimentation and a large team of scientists with far more advanced experience to even being to accomplish.

102. Ma admits that "no work" had previously been done on Liq as a dopant for a Bphen ETL. Ma, 810. This is because, at the time of filing the '425 Patent, the research into using Liq in OLED devices was nascent and focused primarily on Liq as an injection layer material in legacy fluorescent OLED stacks, not as an ETL dopant in phosphorescent OLED devices:

> However, few studies have been reported about using lithium quinolinato complex such as 8-hydroxy-quinolinato lithium (Liq) as an electron injection layer, and no work has yet been reported about using Liq-doped BPhen as electron transport layer (ETL).

Ma, 810

103. In 2011, Kumar recognized that "the reason for the enhanced electron transport property" of Liq in Bphen and Alq3 "was not well understood" or why such high doping (around 30%) concentrations were needed of Liq in the prior

Pictiva EX2002
Samsung v Pictiva
IPR2026-00129

research. EX2004 (Kumar) at 1-2. Indeed, Kumar recognized that Liq had only "recently" been used as a dopant of Bphen and Alq3 electron transport materials. *Id.* at 1. Thus, Kumar states, "n-type doping of organic semiconductors still remains a challenge." *Id.* In other words, n-type doping of organic semiconductors was and remains unpredictable. As Kumar states:

> The common electron transporting molecules used in OLEDs, however, have LUMO value around 3 eV which limits the choice of donor molecules for this application. Further, organic molecules with HOMO around 3 eV are highly unstable in air. Alkali metals like Li and Cs and their oxides are also used for n-type doping of organic electron transport materials and were found useful in many instances. But this type of doping has many serious problems, like damage to underlying organic layers due to high evaporation temperatures. Furthermore, they have also been reported as luminescence quenchers, which act to reduce the lifetime and stability of devices. Hence, there is a need for molecular dopants for enhancement of electron transporting properties in OLED applications. ***Recently 8-hydroxyquinolinatolithium (Liq) has been used as a dopant in electron transporting*** molecules Batho phenanthroline (***Bphen***) and tris(8-hydroxyquinolinato) aluminum (***Alq_3***). ***But the reason for the enhanced electron transport property of these molecules was not well understood, especially the requirement of high doping concentrations (around 30%) in these molecular systems***.

EX2004 (Kumar) at 1-2. That challenge is exactly why, years before Kumar, no POSITA with only bachelor's degree and three years of experience would have been motivated to or reasonably expected success in doping the ETL layers of Diekmann and Suzuki.

104. Also in 2011, Kim experimented with a wide range of doping (5% to 65%) Bphen and multiple configurations of the ETL. EX2003 (Kim 2011),

Pictiva EX2002
Samsung v Pictiva
IPR2026-00129

Abstract, 59. While Kim achieved some positive results, Kim also reported concerns of Liq having "poor electron transportation properties" as doping increased passed 15% (at 57), that "heavy doping of Liq (15%-~50%) causes unbalanced holes and electrons in EML due to excess or insufficient electrons and decreases the device efficiency" (at 58).

105. For reference, Kim created two experimental devices:

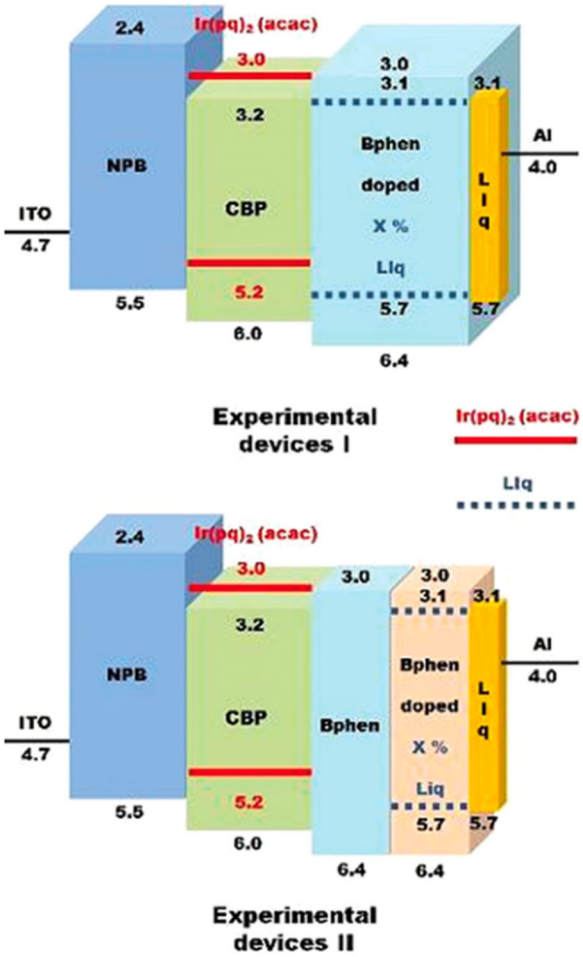

EX2003 (Kim 2011), Fig. 3. As Kim explains:

> The device configuration was ITO=NPB (50 nm)=4,4⁰-N-N⁰-dicarbazole-biphenyl (CBP) doped with 8% bis(2-phenylquinoline)iridium(III) (acetylacetonate) [$Ir(pq)_2(acac)$] (30nm)=Bphen doped with X% Liq (30nm)=Liq (2nm)=Al (100nm), where the doping concentration of Liq in ETL was varied as 5%~65%.
>
> …
>
> The doping ratio of the Liq was controlled to range from 5%~[5]0% in experimental devices I. The current density was increased according to the increase of the doping ratio of Liq, ***but it was decreased by more than 15% because of the poor electron transportation properties of the Liq.*** However, the current density of all experimental devices I is higher than that of the reference device. It proves that the Liq doped in the ETL improves the driving voltage of device. It is assumed to be due to good interfacial contact between the cathode and the ETL when the Liq was doped in the ETL.
>
> …
>
> Although the electron injection into the device is the most efficient in the device with the 15% Liq, the maximum efficiency value was obtained in the device with a doping ratio 5% Liq because the recombination of holes and electrons is well balanced in the 5% Liq doped device. Moreover, ***heavy doping of Liq (15%~50%) causes unbalanced holes and electrons in EML due to excess or insufficient electrons and decreases the device efficiency compare with 5% Liq doped device.***

EX2003 (Kim 2011), Abstract, 57-58.

106. As Oh observed in 2015, the prior documented doping of an ETL with Liq was conducted primarily on ***fluorescent*** OLEDs. EX2005 ( ) at 34 ("In those works listed above, the Liq dopant was applied as the dopant for electron transport layer of fluorescent OLEDs."). Yet, as Oh reports, in a phosphorescent OLED, an Liq dopant was expected to act as a "luminance quencher" because of the low

Pictiva EX2002
Samsung v Pictiva
IPR2026-00129

triplet energy of Liq (2.0 eV). *Id.* at 34 ("However, the Liq dopant can act as a luminance quencher in phosphorescent organic light-emitting diodes (PHOLEDs) because of low triplet energy of Liq (2.0 eV) although there has been no report about the triplet exciton quenching effect by Liq."). Work arounds in 2015 required an exciton blocking layer between the n-doped layer and the emitting layer so as to attempt to block triplet exciton quenching. *Id.* at 34-35 ("Alternatively, exciton blocking layer was inserted between the n-doped layer and emitting layer to block triplet exciton quenching of emitting materials."). But that would increase the driving voltage due to the low electron mobility of the non-doped exciton blocking layer. *Id.* at 35 ("However, this approach increases the driving voltage of the device due to low electron mobility of the non-doped exciton blocking layer.").

107. The full passage from Oh is copied below:

> Cs_2CO_3, CsN_3, and LiF were reported as n-type doping materials and increased the conductivity of an electron transport layer, decreasing the driving voltage of OLEDs. However, the ionic compounds quenched the excitons in the emitting layer and had negative effect on the quantum efficiency of OLEDs. Therefore, organometallic complexes such as 8-hydroxyquinolinatolithium (Liq) were utilized as a molecular dopant to reduce the driving voltage. The organometallic Liq dopant increased the mobility and conductivity of electron transport materials, resulting in low driving voltage in OLEDs. ***However, the Liq dopant can act as a luminance quencher in phosphorescent organic light-emitting diodes (PHOLEDs) because of low triplet energy of Liq (2.0 eV) although there has been no report about the triplet exciton quenching effect by Liq.*** In those works listed above, ***the Liq dopant was applied as the dopant for***

Pictiva EX2002
Samsung v Pictiva
IPR2026-00129

> ***electron transport layer of fluorescent OLEDs***. Alternatively, exciton blocking layer was inserted between the n-doped layer and emitting layer to block triplet exciton quenching of emitting materials. However, this approach increases the driving voltage of the device due to low electron mobility of the non-doped exciton blocking layer. Therefore, it is strongly required to develop high triplet energy n-type doping materials to suppress the triplet exciton quenching by the n-type doping material.

EX2005 (Oh 2015) at 34-35. Neither Samsung nor Dr. Holmes address quenching or propose using any such exciton blocking layer to prevent quenching in Diekmann or Suzuki.

108. The industry is still trying to figure out just how Liq works as a dopant. In a 2022 paper by Kang (EX2006) investigated the "effect of coordinated structures of electron transporting materials (ETMs) with lithium quinolate (Liq) on charge transport characteristics." EX2006 (Kang 2022), Abstract, 1 ("[T]he purpose of our theoretical investigation [is] to understand the effect of ETL-Liq complexation on the charge transport property."). Again, while Kang reported some positive results, Kang also concluded that "charge transport" was actually "retarded" and that "co-deposition of Liq in an ETL solid matrix generally weakens the characteristics of hole/electron carrier transport via forming an ETL-Liq complex":

> The effect of coordinated structures of electron transporting materials (ETMs) with lithium quinolate (Liq) on charge transport characteristics was theoretically investigated. The reorganization energies of holes (λh) and electrons (λe) of ETM-Liq simultaneously increased compared with those of ETMs, indicating that the ***charge***

Pictiva EX2002
Samsung v Pictiva
IPR2026-00129

> ***transporting is retarded***. Interestingly, λe of ETM-(Liq)n increased, while λh decreased. Regarding transfer integrals for holes (th) and electrons (te), th's of T2T-Liq and BPyTP2-Liq were significantly reduced with te of T2T-Liq decreasing tremendously. Consequently, the hopping rates of holes of Liq-complexes were reduced, while that of electrons of BPyTP2-Liq increased and that of T2T-Liq/TSPO1-Liq was reduced.
>
> …
>
> Based on the comprehensive consideration of these results, it can be concluded that the co-deposition of Liq in an ETL solid matrix generally ***weakens the characteristics of hole/electron carrier transport via forming an ETL-Liq complex***.

Id., Abstract, 6.

109. And, even in 2023, reliance on Ma's approach of doping an ETL Bphen with Liq was still rare, as reported by Sasaki:

> Although we fabricated a blue OLED with Liq used as the EIL and BPhen doped with Liq used as the ETL, its operating voltage was much higher than that of Device-3 (Figure S1, Supporting Information). Actually, ***OLEDs fabricated using BPhen doped with Liq as the ETL have rarely been reported.***

EX2007 (Sasaki 2023) at 1.

110. Moreover, Ma describes increased conductivity of the Bphen transport layer due to "electron hopping among BPhen and Liq sites." Ma, 813. This "hopping" mechanism differs from the n-doping mechanism described in the `425 patent of an "electron donor," which improves the conductivity of the electron transport layer by increasing the number of electrons. `425 patent at 26:61-62. Diekmann's dopant of its injection layer is as an "electron donor" (Diekmann, 91)

Pictiva EX2002
Samsung v Pictiva
IPR2026-00129

and similarly focused on materials "suitable for emitting electrons" (*Id.*, 10, 34, 119), not electron hopping. This is likely why Ma required such heavy Liq doping. No POSITA would turn to a heavy dopant using an unproven transport mechanism (hopping) as in Ma over a simpler electron donor dopant that operates at significantly lower concentrations.

111. Indeed, a POSITA would be skeptical as to whether Liq is even an n-dopant as in the '425 Patent as Liq is described by Ma. Generally, a molecular dopant n-dopes an ETL by transferring electrons from the dopant's HOMO to the ETL's LUMO, as illustrated below:

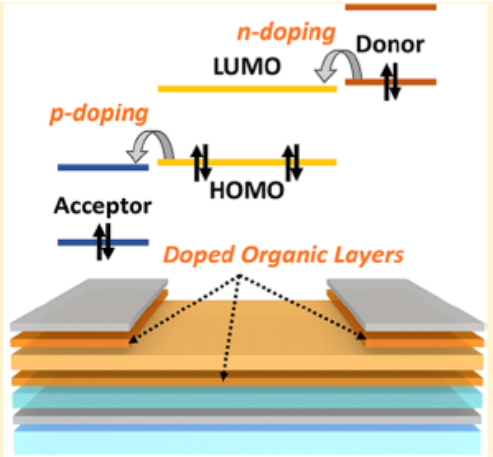

EX2009, Abstract.

112. The HOMO of Liq is 5.8eV (https://www.ossila.com/products/8-quinolinolato-lithium) while the LUMO of BPhen—according to Ma—is about 3.0eV. A POSITA would have regarded the 2.8eV energy gap as too much for any electron transfer from n-doping to occur from Liq to BPhen. Thus, although Ma described BPhen as n-doped, Samsung and Dr. Holmes have not explained why

shortening the molecule distance between electron carrier sites to improve "hopping" is n-doping as opposed to modulating the electron mobility.

113. In short, the use of Liq as an ETL dopant at the time of filing the '425 Patent was experimental and unpredictable and only demonstrated in Bphen in a fluorescent Alq_3 stack alongside an F_4-TCNQ-doped m-MTDATA layer. A POSITA would not have read Ma any broader.

D. Samsung and Dr. Holmes Do Not Account for the Differences Between Ma's Alq_3-based Fluorescent Emission System Versus the Claimed Iridium-based Phosphorescent Emission Systems

114. A skilled artisan would understand that Iridium-based compounds are phosphorescent emitters whose emission involves a triplet excitation state. This differs from a fluorescent emitter like Alq_3 used by Ma, which involves only a singlet excitation state.

115. As previously explained, Liq, with its relatively low triplet energy potentially "act[s] as a luminance quencher in phosphorescent organic light-emitting diodes (PHOLEDs)." EX2005 (Oh 2015) at 34. This is because PHOLEDs (unlike fluorescent OLEDs) use triplet excitation for emission. Neither Samsung nor Dr. Holmes account for this difference and indeed ignores the difference between Iridium-based phosphorescent and Alq_3-based fluorescent emitters entirely.

Pictiva EX2002
Samsung v Pictiva
IPR2026-00129

116. Given the early stages of this research into Liq, a skilled artisan armed with only a bachelor's degree in physics and chemistry and three years of experience would not and could not just swap materials or dopants into an entirely different stack with a reasonable expectation of success. That level of POSITA simply lacks the experience and expertise to do so. Such efforts would require a large team of cross-disciplinary scientists with far more advanced experience to even being to accomplish.

117. At the time of filing the '425 Patent, the research into using Liq in OLED devices was nascent and focused primarily on Liq as an ***injection*** layer material in ***fluorescent*** OLED stacks, not as an ETL dopant in phosphorescent OLED devices. As Ma's limited use shows, Liq was only starting to be tested in single, very specific and known fluorescent Alq_3-based OLED stack as a dopant for BPhen. Ma, 810.

118. Ma admits that "no work" had previously been done on Liq as an ETL dopant in BPhen:

> However, few studies have been reported about using lithium quinolinato complex such as 8-hydroxy-quinolinato lithium (Liq) as an electron injection layer [25], and no work has yet been reported about using Liq-doped BPhen as electron transport layer (ETL).

Ma, 810. Indeed, in 2023, Sasaki reported that "using Bphen doping with Liq as the ETL" has "rarely been reported":

Pictiva EX2002
Samsung v Pictiva
IPR2026-00129

> Although we fabricated a blue OLED with Liq used as the EIL and BPhen doped with Liq used as the ETL, its operating voltage was much higher than that of Device-3 (Figure S1, Supporting Information). ***Actually, OLEDs fabricated using BPhen doped with Liq as the ETL have rarely been reported.***

EX2007 (Sasaki 2023) at 1. Ma thus describes itself as the first use of Liq as a heavy dopant in its Bphen ETL in its fluorescent (Alq_3 emitter) OLED.

119. The use of Liq as a dopant remained almost exclusively on fluorescent OLEDs through at least 2015. EX2005 (Oh 2015) at 34. Yet, in that time frame and still years after the filing of the ’425 Patent, “the reason for the enhanced electron transport property” of Liq in Bphen and Alq_3 and why such high doping (around 30%) concentrations were needed of Liq still “was not well understood.” EX2004 (Kumar 2011) at 1-2. “[N]-type doping of organic semiconductors still remain[ed] a challenge” even then. *Id*. And, even as recently as 2022, researchers were still trying to figure out just how Liq works. EX2006 (Kang), Abstract, 1 (investigating the “effect of coordinated structures of electron transporting materials (ETMs) with lithium quinolate (Liq) on charge transport characteristics.”).

120. Yet the embodiments relied on by Smasung in Suzuki and Diekmann are ***phosphorescent*** OLEDs, not fluorescent OLEDs. Pet. 26 (relying on Diekmann’s emissive layer of “TMM-004:Ir(ppy)3(15%) layer (Irppy = fac-tris(2-phenly- pyridyl)iridium complex)”), 58 (Suzuki’s alleged Iridium complex is a

Pictiva EX2002
Samsung v Pictiva
IPR2026-00129

PHOLED); *see* EX1003, ¶¶ 31 (Iridium as a phosphorescent material), 38, 112 ("Ir(ppy)3, which is an iridium-containing compound which functions as a green light-emitting phosphorescent dopant"), 196 ("Suzuki teaches that in the case of phosphorescent dopants, "iridium compounds are the most preferable."); *see* EX1014 (Baldo 1999), 4. There is no iridium-containing emission layer in Ma's fluorescent system. Instead, Ma uses a single layer of Alq_3—the oldest and most studied fluorescent emissive layer material in OLED. Samsung and Dr. Holmes make no effort to explain how or why a Liq dopant tailored for Alq_3 and Bphen with the device-specific charge balance challenges would work with either Iridium-based emitters or their other emissive materials in the stack with their different HOMO and LUMO levels as well as other properties.

121. OLED emission is known to be quenched by Li+ ions from using a Liq layer or a Liq bulk dopant in phosphorescent OLED devices. Whatever the benefits to a fluorescent Alq_3 OLED, in a phosphorescent OLED, a Liq dopant acts as a "luminance quencher" because of the low triplet energy of Liq (2.0 eV). EX2005 (Oh 2015) at 34 (Liq as a dopant "act[s] as a luminance quencher in phosphorescent organic light-emitting diodes (PHOLEDs)."). As Oh reports, there was still a need, long after the filing date, of a high triplet energy n-type doping material that suppress triplet exciton quenching in phosphorescent OLEDs. EX2005 (Oh 2015) at 35 ("Therefore, it is strongly required to develop high triplet

Pictiva EX2002
Samsung v Pictiva
IPR2026-00129

energy n-type doping materials to suppress the triplet exciton quenching by the n-type doping material."). Samsung ignores the quenching problem. But, more fundamentally, Samsung never explains why a POSITA would have used Liq as a dopant in Diekmann's or Suzuki's phosphorescent system with a reasonable expectation of success given these unsolved quenching concerns.

122. No POSITA at the time of filing the '425 Patent would have been motivated to use this experimental and unexplored Liq dopant from a fluorescent Alq_3 stack in Diekmann's or Suzuki's entirely different phosphorescent OLED given its limited and experimental use with a reasonable expectation of success.

E. Samsung and Dr. Holmes Do Not Address the Delicate Energy-Level Balance Required for the Different Organic Layers in an OLED Stack

123. OLED stack layers and dopants are not modular, swappable components. There are significant difficulties in using unproven materials in a different OLED stack. To illustrate, the choice of which layers to use, the specific materials for each layer, the dopant and its concentration, if any, for each layer, the size of each layer, the layer order, and the choice of manufacturing processes (deposition, co-evaporation, temperature, and so forth) must be carefully chosen to maintain that balance that still create an operable OLED. Otherwise, there would be no "light emitting device" to qualify as the claimed OLED device that emits EM radiation in the claimed range.

Pictiva EX2002
Samsung v Pictiva
IPR2026-00129

124. For instance, maintaining the proper energy level balance between the layers is extremely difficult and necessary to solve before potentially expecting to build an operable OLED system that emits any electromagnetic radiation. Using the wrong materials, dopants, amount of doping, layer thickness, manufacturing processes, among many other variables could end up preventing an operable OLED entirely. At its core, OLED device engineering remains somewhat of an art form subject to complex and unpredictable results.

125. For an operational OLED, the LUMO and HOMO levels of the OLED layers must be carefully engineered. As Dr. Holmes admits, efficient injection of electrons and holes requires "relative energy level alignment between adjacent layers of the organic stack as well as the electrical conductivity of each layer." EX1003, ¶ 32; *see* EX2004 (Kumar 2011) at 1 (matching the "HOMO" value "of the donor molecule" to the "LUMO" value "of the host molecule.").

126. This is accomplished by matching the LUMO and HOMO levels of the various OLED layers so that the electrons and holes can traverse from the cathode or anode, respectively, to the emissive layer. The consequence of misaligning the charge levels is that the OLED might be inoperable.

127. Figure 1 of the '425 Patent is an energy level diagram, showing the LUMO (blue) and HOMO (red) balance in the '425 Patent's stack:

Pictiva EX2002
Samsung v Pictiva
IPR2026-00129

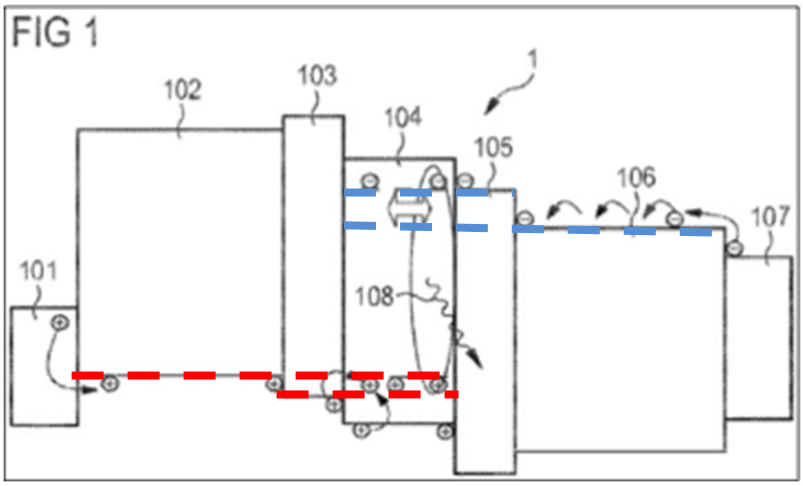

'425 Patent, Fig. 1 (annotated). The gap between neighboring levels must be sufficiently close to permit the injected electrons and holes to move (transport) from the electrode toward the emissive layer. Yet, at the same time, a charge balance must also be maintained to prevent holes from crossing into the ETL and to prevent electrons from passing into the HTL to avoid quenching and degradation of the OLED.

128. The HOMO and LUMO levels on the other side of the emissive layer must be sufficiently lower that the hole (p) or electron (n) side to avoid the holes entering the electron side or the electrons entering the hole-side. *E.g.*, EX2003 (Kim 2011) at 54 (higher mobility of holes results in "non-emissive cationic species" in the emission layer, obstructing "hole-electron recombination" and forming "dark spots, luminance decay[,] and subsequent low efficiency"), 56 (depicting charge levels for Liq doping), 57 (Liq has "poor electron transportation properties"), 58 ("heavy doping of Liq (15%-~50%) causes unbalanced holes and

electrons in EML due to excess or insufficient electrons and decreases the device efficiency."); EX1029 at 6.

129. The '425 Patent's embodiment below illustrates this by the large band gaps on the electron blocking layer (103) and hole barrier layer (105):

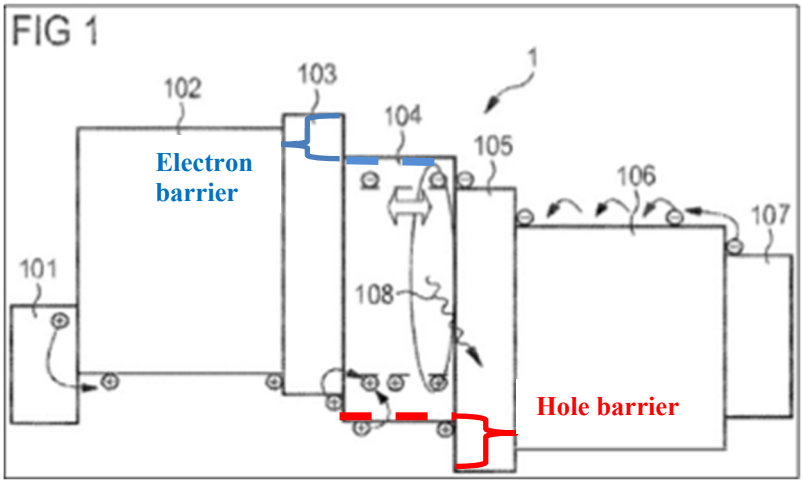

'425 Patent, Fig. 1 (annotated). The result is that a there is only a narrow range of permissible LUMO and HOMO levels for each layer and dopant to create an operable OLED. Adding a Liq as dopant—especially as a heavy 30%+ dopant as in Ma—would greatly throw off this delicate charge balance in Diekmann and Suzuki.

130. Ma repeatedly emphasizes this need for maintaining "efficient charge balance in the emission zone." Ma, Abstract, 810 ("[t]he high carrier balance is reached in the emission zone, which leads to the enhanced current and power efficiency at low driving voltage"), 813 ("current efficiency" depends "on the carrier balance"), 814 (discussing "good balance" between electrons and holes with "efficient charge balance" in the emission layer). This "good carrier balance" is

"one of the most important factors in getting excellent performance in OLEDs." *Id.* at 814.

131. Significant work continued well after the filing date in determining the correct energy band levels to dope materials with Liq for an operable system even when just based on Bphen as in Ma. EX2003 (Kim 2011). Abstract, 59 (testing multiple configurations of an ETL with doping concentrations of 5-65% of Liq in Bphen, reporting efficiency points as low as 5% and as high as 65% depending on configuration). Samsung makes no effort to explain how this would even be reasonably expected to work within the LUMO and HOMO level constraints of the different neighboring layers in Diekmann or Suzuki.

F. Samsung and Dr. Holmes Offer No Evidence that Diekmann and Suzuki Would Have Gained Any Benefit from Using a Liq-doped ETL

132. Ma's performance enhancement due to Liq was to correct a known hole surplus.

> For the stability of the devices, we have known that in un-doping devices, such as *Device A* [(the reference device)], the number of holes is much more than electrons. So, a surplus of holes at the NPB/Alq3 interface increases the probability that Alq3 cations are formed, which are known to be unstable and lead to rapid device degradation. However, in this paper, we introduce a p–i–n devices with a novel n-doping (33wt.% Liq:BPhen) layer as ETL and a p-doped (0wt.%, 0.3wt.%, 2 wt.% and 4 wt.% F4 -TCNQ:m-MTDATA) layer as HTL, in which the holes and electrons have a good balance seen from Fig. 6, leading to the decrease in surplus of holes."

Pictiva EX2002
Samsung v Pictiva
IPR2026-00129

Ma, 814. Samsung and Dr. Holmes do not contend Diekmann or Suzuki have such a surplus of holes to correct.

133. Without that hole surplus, Liq would have been expected to create an *electron surplus*, breaking charge carrier balance for generating excitons and degrading the emitter molecules. A skilled artisan would have expected that doping Liq into Diekmann and Suzuki as proposed by Samsung would thus only create charge balance problems. *See* EX2003 (Kim 2011) at 54 (charge imbalance leads to "dark spots, luminance decay[,] and subsequent low efficiency."). This is contrary to Ma and the extremely important need to maintain the charge balance, as discussed in the prior section.

134. Again, Ma repeatedly emphasizes that need for maintaining "efficient charge balance in the emission zone" for its reportedly improved efficiency. Ma, Abstract, 810 ("[t]he high carrier balance is reached in the emission zone, which leads to the enhanced current and power efficiency at low driving voltage"), 813 ("current efficiency" depends "on the carrier balance"), 814 (discussing "good balance" between electrons and holes with "efficient charge balance" in the emission layer). This "good carrier balance" is "one of the most important factors in getting excellent performance in OLEDs." *Id.* at 814. A POSITA, reading Ma, would not risk throwing off the carrier balance by creating an electron surplus. In

Pictiva EX2002
Samsung v Pictiva
IPR2026-00129

my opinion, Ma teaches away from Liq doping an ETL in an OLED device without a known hole surplus to correct.

135. Further, Samsung does not specify how much to dope the ETL layers in Diekmann or Suzuki and thus cannot show a reasonable expectation of success. This is not a scenario where more is better.

136. Ma illustrates this difficulty. Ma proposed ***heavily*** doping its BPhen layer with 33% Liq. Ma, Abstract. But Ma reported reduced conduction as the ratio increases to 50% Liq "attributed to the effect of carrier quench and generation of defects." Ma, 813. Such heavy doping of Liq turns Liq into more of a host material given the significant amount used, leading to the effects of Liq as a bulk material to become more present. For instance, even 5 nm of Liq (as an electron injection layer), risked "significantly affecting the EL properties" similar to LiF's instability and emission blocking. EX1018 (Liu), Abstract, 214 ("Liq layers should be under 5 nm to avoid "significantly affecting the EL properties"); *see generally id.* at 213 ("When the LiF thickness is increased to 1.0 nm, the EL efficiency deteriorates. When the thickness of LiF is 5 nm, the device is very unstable, and when it reaches 10 nm, the device does not give emission at all.").

137. In 2011, the uncertainty in the even the amount of doping remained even for BPhen. *See* EX2003 (Kim 2011). Abstract, 59 (testing multiple configurations of an ETL with doping concentrations from 5-65% of Liq in Bphen,

Pictiva EX2002
Samsung v Pictiva
IPR2026-00129

reporting efficiency points as low as 5% and as high as 65% depending on layer configuration and thickness). While Kim achieved some positive results, Kim also reported concerns of Liq having "poor electron transportation properties" as doping increased passed 15% (at 57) and that "heavy doping of Liq (15%-~50%) causes unbalanced holes and electrons in EML due to excess or insufficient electrons and decreases the device efficiency" (at 58). Samsung and Dr. Holmes do not mention the Liq doping concentration at all.

138. Samsung also ignores the significant technical barriers to phosphorescent OLED fabrication in even attempting to utilize a new, unproven dopant from a different OLED layer stack that are well-beyond the limited level of ordinary skill proposed by Samsung. Liq doping could "retard[]" and "weaken" charge transport, for example. EX2006 (Kang 2022), Abstract, 6 (theorizing the formation of an ETL-Liq complex). EX2003 (Kim 2011) at 54 (charge imbalance leads to "dark spots, luminance decay[,] and subsequent low efficiency"). Samsung does not explain how doping could be accomplished with Liq in Diekmann or Suzuki in a manner that would have been reasonable expected to work in Diekmann or Suzuki's system without these significant problems.

Pictiva EX2002
Samsung v Pictiva
IPR2026-00129

139. I declare that all statements made herein of my own knowledge are true and that all statements made on information and belief are believed to be true; and further that these statements were made with the knowledge that willful false statements and the like so made are punishable by fine or imprisonment, or both, under Section 1001 of Title 18 of the United States Code.

140. Executed on October 28, 2024, in Ringgold, Georgia, USA.

P. Morgan Pattison, Ph.D.

Pictiva EX2002
Samsung v Pictiva
IPR2026-00129

EXHIBIT A

P. Morgan Pattison
morgan@sslsinc.com
(805)217-3878

Experience

Solid State Lighting Services, Inc. **November 2007 - Present**
Founder/President- Provide technical, strategic, and market expertise in the areas of LEDs, OLEDs, Lighting, Solid State Lighting (SSL), displays, and optoelectronic materials and devices. LED device, lighting, and materials product development. Horticultural lighting research and strategy. Light pollution measurement, evaluation, and mitigation. LED and lighting product failure and reliability evaluation. Manage research on human and animal physiological responses to light. Scout and evaluate new technologies for investment.

U.S. Department of Energy **January 2006 – November 2007**
National Energy Technology Laboratory, Morgantown WV
Project Manager- Managed DOE funded R&D projects in SSL including LED and OLED lighting technologies. Managed solicitation and selection of new funded R&D projects. Identified priority areas of research necessary for advancement of SSL efficiency, performance, and price.

University of California, Santa Barbara **September 2000 – January 2006**
Graduate Student Researcher- Doctoral thesis research under Professor Shuji Nakamura (Nobel Prize in Physics 2014) on GaN based micro-cavity light emitting diodes. Research included: epitaxial structure design and growth by MOCVD, semiconductor process development, materials characterization, and electro-optical device characterization. Additional areas of research included UV LEDs, vertical cavity surface emitting laser (VCSEL), and edge emitting laser diodes.

Cymer Laser, San Diego **November 1996 – May 2000**
Laser Test Engineer- Tested and developed test methodology for production and prototype KrF and ArF excimer lasers used in deep UV photolithography for manufacturing of advanced semiconductor products. Testing included optical characterization and full system troubleshooting. Test development of new electrical and optical test methodologies to improve test cycle, Labview automation of test procedures, and development of test documentation.

Education

Ph.D. Materials Science, Electronic and Photonic Materials
University of California, Santa Barbara, 2006
Thesis: *Fabrication and Characterization of Gallium Nitride Based Micro-Cavity LEDs*
M.S. Electrical Engineering, Electronics and Photonics
University of California, Santa Barbara, 2003
B.S. Electrical Engineering, Electronic Devices and Materials
University of California, San Diego, 1996

Expertise

Optoelectronic materials and devices, lighting, LED, OLED, UV-LEDs, Germicidal UV application, R&D and technology evaluation, μLED-LED-OLED-Quantum Dot display technology, medical lighting, SSL product evaluation and selection, LED lighting product development, R&D Management, technology roadmapping, technical meeting moderation, technical writing, IP evaluation, trial expert witness, lighting color evaluation and selection, advanced lighting performance evaluation, Energy Star LED lighting testing, photometric characterization and testing, R&D Management, Federal R&D funding processes, R&D Proposal review and evaluation, ESCO contracts and performance measurement & verification (M&V), horticultural lighting, wildlife responses to light, human physiological responses to light

Accreditations, Affiliations, and Professional Societies

Fellow - Illuminating Engineering Society (IES)
- Chair – Outdoor Nighttime Environments (ONE) Committee
- Voting Member – IES Horticultural Lighting Committee

Oregon State University, Civil and Construction Engineering, Courtesy Faculty
Lighting Certified (LC) by National Council on Qualifications for Lighting Professionals
Member: International Society of Horticultural Scientists (ISHS), International Dark-Sky Association (IDA), International Society for Optics and Photonics (SPIE), American Society of Agricultural and Biological Engineers (ASABE), American Physical Society (APS)
Project Management Professional (PMP) *Lapsed,* Project Management Institute (2006)
U.S. Government Contracting Officer's Representative (COR) (2006)

Leadership

Senior Technical and Strategic Advisor to DOE SSL R&D Program
Lead writer of DOE SSL R&D Opportunities, R&D Plan, and Multi-Year Program Plan
Technical content supervisor of annual DOE SSL R&D Workshops
Manage organization of DOE SSL topical R&D meetings on: LED devices and materials, OLEDs, luminaire integration, roadway lighting, germicidal ultraviolet (UV) LEDs, human physiological responses to light, domesticated and wild animal responses to light, roadway and area lighting, and horticultural lighting
New business creation/development –*Action Spectrum, Ultra-Yield Solutions, Guidance LED, Zuli, Canvas, Intellilight/Next, SSLS, Inc., Diel Lighting Science, Blue Laser Fusion*
Scientific Advisory Board member to *GLASE (Greenhouse Lighting and System Engineering)*, NYSERDA funded controlled environment agriculture R&D program
Technical Advisory Committee of Resource Innovation Institute
Advisory Board Member of *Phosphor Global Summit* annual meeting
Advisor to *Cyclotron Road* – Clean Technology Incubator at Lawrence Berkeley National Lab
Project sponsor for Senior Design Course at UCSB (2011-2012)

1. Design and development of spectro-goniophotometer
2. Design and development of smartphone light controller (co-founder and original board member of resulting company renamed *Zuli*)

Designed, fabricated, and characterized world's first gallium nitride microcavity LED
Fabricated and characterized world's first gallium nitride semipolar LED

Publications

Minimizing Ecological Impacts of Marine Energy Lighting. Reilly, C. E., Larson, J., Amerson, A. M., Staines, G. J., Haxel, J. H., & Pattison, P. M. (2022). *Journal of Marine Science and Engineering*, *10*(3), 354.

Department of Energy SSL Manufacturing Status and Opportunities (2022)

Photon Efficacy in Horticulture. Kusuma, P, Pattison, PM, Bugbee, B. (2021) Chapter 7 in *Plant Factory: Basics, Applications and Advances*

A Review of Human Physiological Responses to Light: Implications for the Development of Integrative Lighting Solutions. Vetter, C, Pattison, PM, Houser, K, Herf, M, Phillips, AJK, Wright, KP, Skene, DJ, Brainard, GC, Boivin, DB, Glickman, G. (2021) *Leukos*

DOE 2020 LED Manufacturing Supply Chain. Lee, K, Nubbe, V, Rego, B, Hansen, M, Pattison, M. *U.S. DOE Lighting R&D Program*. July 2021.

Recommended Practice: Horticultural Lighting, An American National Standard. ANSI/IES RP-45-21. *Illuminating Engineering Society*. June 2021.

Energy Savings Potential of SSL in Agricultural Applications. Lee, K, Elliott, C, and Pattison, PM. *U.S. DOE Lighting R&D Program*. June 2020.

From physics to fixtures to food: current and potential LED efficacy. Kusuma, P, Pattison, PM, and Bugbee, B. (2020) *Horticultural Research*. 7, 56.

What's next for LEDs. Pattison, PM (2019) *Electroindustry*. March/April 2019.

Building the evidence outside the lab. Pattison, PM (2018) *Lighting Design & Application*. December

LEDs for photons, physiology and food. Pattison, PM, Tsao, JY, Brainard, GC, Bugbee, B. (2018) *Nature*. 563, 493-499.

LEDs for Horticulture: More than Meets the Eye. Pattison, PM. (2018) *Lighting Design & Application*. August.

LED lighting efficacy: Status and directions. Pattison, PM, Hansen, M, Tsao, JY. (2018) *Comptes Rendus Physique*. 19, 134-145.

Energy Savings Potential of SSL in Horticultural Applications. Stober, K, Lee, K, Yamada, M, and Pattison, PM. *U.S. DOE Lighting R&D Program*. December 2017.

Department of Energy Solid State Lighting R&D Opportunities/Plan, *lead author* (2022, 2019, 2018, 2017, 2016, 2015)

Light-emitting diode technology status and directions: opportunities for horticultural lighting. Pattison, PM, Tsao, JY, Krames, MR. (2016) *Acta Horticulturae*. 1134, 413-426.

Status of SSL Product Development and Future Trends for General Illumination. Katona TM, Pattison PM, Paolini S. (2016) *Annual Review of Chemical and Biomolecular Engineering* 7 (1).

The Blue LED Nobel Prize: Historical context, current scientific understanding, human benefit. Tsao, J, Han, J, Haitz, R, Pattison, PM. (2015) *Annalen der Physik* 527, No. 5–6, A53–A61.

Department of Energy SSL R&D Multi-Year Program Plan (2008-2014)

Department of Energy SSL Manufacturing Roadmap (2009-2014)

Gallium nitride based microcavity light emitting diodes with 2 lambda effective cavity thickness. Pattison, P. M., David, A., Sharma, R., Weisbuch, C., DenBaars, S., & Nakamura, S. (2007). *Appl. Phys. Lett*, *90*, 031111.

First-moment analysis of polarized light emission from InGaN/GaN light-emitting diodes prepared on semipolar planes. Masui, H., Baker, T. J., Sharma, R., Pattison, P. M., Iza, M., Zhong, H., Nakamura, S., & DenBaars, S. P. (2006). *Japanese journal of applied physics*, *45*(9L), L904.

Gallium nitride based micro-cavity light emitting diodes emitting at 498 nm. Pattison, P. M., Sharma, R., David, A., Waki, I., Weisbuch, C., & Nakamura, S. (2006). *Physica Status Solidi (a)*, *203*(7), 1783-1786.

Demonstration of a semipolar (10 (1) over-bar (3) over-bar) InGaN/GaN green light emitting diode. Sharma, R., Pattison, P. M., Masui, H., Farrell, R. M., Baker, T. J., Haskell, B. A., Wu, F., DenBaars, S.P., Speck, J.S., & Nakamura, S. (2005). *Applied Physics Letters*, *87*(23).

Micro cavity effect in GaN-based light-emitting diodes formed by laser lift-off and etch-back technique. Fujii, T., David, A., Schwach, C., Pattison, P. M., Sharma, R., Fujito, K., Margalith, T., DenBaars, S.P., Weisbuch, C., & Nakamura, S. (2004). *Japanese journal of applied physics*, *43*(3B), L411.

292 nm AlGaN single-quantum well light emitting diodes grown on transparent AlN base. Hanlon, A., Pattison, P. M., Kaeding, J. F., Sharma, R., Fini, P., & Nakamura, S. (2003). *Japanese journal of applied physics*, *42*(6B), L628.

Higher efficiency InGaN laser diodes with an improved quantum well capping configuration. Hansen, M., Piprek, J., Pattison, P. M., Speck, J. S., Nakamura, S., & DenBaars, S. P. (2002). *Applied physics letters*, *81*(22), 4275-4277.

Presentations

2024 Joint CEA Workshop, U.S. Fish & Wildlife Service Light Pollution & Bird Collisions expert panel, Workshop on Disorder in Semiconductor Physics and Devices 2024, University of Cincinnati IRIS 2023 Working Group, IES Raleigh Section "Horticultural Lighting – A Growing Opportunity", IES Street and Area Lighting Conference 2022, National Park Service Science and Technology – Skyglow Measurements at Channel Islands National Park 2022, UCSB Nitride Seminar 2022, International SSL Alliance 2021 General Assembly, The Limits of Food Production – Vertical Farming 2021, Horticann 2020, U.C. Davis Energy and Efficiency Institute,

California Energy Administration, 2020 DOE Lighting R&D Workshop, Charleston Catholic High School STEM Seminar, East Tennessee State University Physics and Astronomy Seminar, IES Rocky Mountain Section – CU Boulder, 2019 DOE SSL R&D Workshop, Harvard ES-173 Guest Lecture, U.S. DOE Building Technologies Office Brown Bag Seminar, U.C. Santa Barbara Nitrides Seminar 2018, Phosphor Global Summit 2018, West Virginia State University – Biology Seminar, East Tennessee State University Entrepreneur Club 2018, IES Aviation Lighting Committee Meeting 2017 (Best Technical Paper), ICCEA Panama 2017, NCERA 101 Controlled Environment Agriculture meeting, DOE SSL R&D Workshop 2017, The College of New Jersey Physics Colloquium, DOE SSL R&D Workshop 2017, NREL 2016, Harvard University Engineering Seminar, LightSym 2016, DOE SSL R&D Workshop 2016, DOE SSL Technology development Workshop 2015, DOE SSL R&D Workshop 2015, IDTechX Internet of Things Applications, Phosphor Global Summit 2014, International Conference on Nitride Semiconductors 2013, IES Illuminate Philadelphia 2012, Strategies in Light 2012, Energy Efficiency Expo 2011, Tennessee Association of Physical Plant Administrators 2011, East Tennessee State University Faculty Development Sustainability Seminar 2011, LED Discovery 2010, Think Tomorrow Today 2008, International Conference on Nitride Semiconductors 2005, International Symposium on Blue Lasers and Light Emitting Diodes 2004, Fall Materials Research Society 2001.

Patents

Technique for growth and fabrication of semipolar (Ga, Al, In, B) N thin films, heterostructures, and devices. #9793435, #9231376, #8686466, #7846757, #10529892

Lighting unit having lighting strips with lighting elements and a remote luminescent material. #8491165

Lighting unit with heat dissipating chimney #8360607

Lighting unit with indirect light source #8684566 B2

System for monitor and control of equipment. #9432210

Semiconductor light emitting device #8227820, #8643036

Etching technique for the fabrication of thin (Al, In, Ga) N layers. #7795146

Semiconductor micro-cavity light emitting diode. Application # 11/510,240 (abandoned), WO2007025122