Attorney Docket No. 7552/85663
Total Pages 3

IN THE UNITED STATES PATENT AND TRADEMARK OFFICE

Commissioner for Patents
P.O. Box 1450
Alexandria, VA 22313-1450

Transmitted herewith for filing under 37 CFR 1.53(b) are the specification and claims of the nonprovisional patent application of:

Ross PIRTLE
Inventor(s)

TOOLS FOR RAILWAY TRAFFIC CONTROL
Title

APPLICATION ELEMENTS ENCLOSED:

1. X Specification (total pages 42) including:
   a. 10 pages of claims (claims 1-19)
   b. 1 page(s) Abstract

2. X 11 sheets of drawings (Figs. 1A-13)

3. X Oath or declaration of inventor (1 total page)
   a. X Newly executed
   b.___ Unexecuted
   c.___ Copy from a prior application (*for continuation/divisional with Item 12 completed*)

4. X Application Data Sheet (signed).

5.___ Deletion of Inventor(s): Signed statement pursuant to 37 CFR 1.63(d)(2) and 1.33(b).

6.___ Incorporation By Reference: of entire disclosure of prior application(s) indicated in item 12.

APPLICATION PARTS ENCLOSED:

7.___ Nonpublication Request Under 35 U.S.C. 122(b)(2)(B)(i).

8.___ This application is assigned to

   a.__An assignment (including Form PTO-1595) _____ pages.

   b.__Request for Identification of Assignee On Cover Page of Publication.

9. X Power of Attorney
   a. X Newly executed
   b.___ Copy from a prior application
   c.___ Communication Indicating Practitioners To Be Recognized As Being Of Record
   d.___ 37 CFR 3.73(b) Statement (*when there is an assignee*).

10.___ Information Disclosure Statement
____ Form PTO-1449
____ List of Related Cases
____ Copies of IDS Citations

11.___ A Preliminary Amendment

12.___ If a Continuing Application, *check the appropriate box and supply the requisite information*:
_____ Continuation of prior application No.:_____ filed _____
_____ Divisional of prior application No.: _____ filed _____
_____ Continuation-in-part (CIP) of prior application No.: _____ filed _____

13.___ Applicant hereby claims priority under 35 U.S.C. §119 of application No.
____ Certified copy of priority application No. ___ is enclosed herewith.
____ Certified copy of priority application No. ___will be submitted in due course.
____ Certified copy of priority application No. ___has been filed in prior appl'n no. __.
____ A Request To Retrieve Electronic Priority Application is enclosed herewith.

14.__ This is a transitional application filed on or after March 16, 2013 and claims foreign priority or domestic benefit of an application filed before March 16, 2013.
___ This transitional application includes claim to invention having effective filing date on or after March 16, 2013

15.___ Applicant hereby establishes small entity status under 37 C.F.R. §1.27

The filing fee for electronic filing (claims as amended) is calculated as follows:

					Rate			Fee	
	Number Filed		Number Extra*		Small Entity	Other Entity		Small Entity	Other Entity
Total Claims	19 - 20	=	0	X	$40	$80	=	$	$0
Indep. Claims	3 - 3	=	0	X	$210	$420	=	$	$0
Multiple Dependent Claims Presented: Yes____ No __X__					$390	$780	=	$	$0
(53 pages*0.75) - 100 pages / 50pages		=	0	X	$200	$400	=	$	$0
*If the difference in column 1 is less than zero, enter "0" in column 2					Basic Fee			$140.00	$280.00
					Search Fee			$300.00	$600.00
					Examination Fee			$360.00	$720.00
					Total Fee			$	**$1,600.00**

Attorney Dkt. No. 7552/85663

16.___ A check in the amount of $_____ to cover the filing fee.

17.___ A check in the amount of $_____ for recordation of the Assignment.

18. X The Patent Office is hereby authorized to charge the following fees in connection with the following or credit any overpayment to Deposit Account No. 03-3125.

- X Filing fees for electronic filing ($ 1,600.00) under 37 C.F.R. §1.16.
- X Patent application processing fees under 37 C.F.R. §1.17.
- ___ The issue fee set in 37 C.F.R. §1.18 at or before mailing of the Notice of Allowance, pursuant to 37 C.F.R. §1.311(b).

19.__ Other (identify):

CORRESPONDENCE ADDRESS:
Customer Number 23432
COOPER & DUNHAM LLP
30 Rockefeller Plaza, 20th Floor
New York, New York 10112
United States of America
Tel.: (212) 278-0400
Fax: (212) 391-0525

Respectfully submitted,

2014 OCT. 21
Date

Paul Teng, Reg. No. 40,837
Attorney for Applicant
COOPER & DUNHAM LLP
30 Rockefeller Plaza, 20th Floor
New York, New York 10112
Tel.: (212) 278-0400

TOOLS FOR RAILWAY TRAFFIC CONTROL

CROSS-REFERENCE TO RELATED APPLICATION

This application claims the benefit of U.S. Provisional Application No. 61/893,547, filed October 21, 2013 and entitled "SYSTEM, APPARATUS AND METHOD FOR RAILWAY TRAFFIC CONTROL".

TECHNICAL FIELD

This disclosure relates to railway traffic control, and more specifically, a system, apparatus, and method for railway traffic control to address concerns for safety of railway workers working on or near railroad tracks.

BACKGROUND

Railway transportation is run under strict operational guidelines or rules, in order to operate safely. Most of these guidelines are standard amongst commercial railway traffic. Examples of transport standards include interlock signals, centralized traffic control (CTC), rule 251, etc.

Interlocking signals govern movement within a sector controlled by an interlock. For example, on a specific track line, a track may be divided into sections of 400 to 2500m,

WABTEC EX1023

on each of which trains move at a speed depending on an interlocking signal exhibited by an interlock at an entrance to the section. That is, the interlocking signal displays a color system which instructs the conductor of the train, or the train operating by automated response, how to move through the upcoming section of track. Interlocking systems usually incorporate a 3-color system by which the train, or train conductor, is informed to proceed at regular speed, is informed to proceed at a reduced speed or is prohibited from proceeding through the upcoming section.

While interlocking systems can be operated manually, currently most interlocking systems are controlled electronically. One method of controlling all of the interlocks within a rail system is through a centralized traffic control (CTC), or traffic control system (TCS). A CTC is used for monitoring, tracking and operating trains traversing tracks throughout a network. The CTC is controlled by a single person known as a train dispatcher.

In order for the train dispatcher to make appropriate train control decisions regarding how the train should be operated, various information and data must be obtained and presented. Information regarding track conditions, train traffic, scheduling, etc., are presented on a control

WABTEC EX1023

console which may include a map of the entire rail system controlled by the CTC. Through the control console, the dispatcher has control of each interlock signal (that is, the dispatcher controls the train traffic and flow of train traffic using the interlocks) and is constantly made aware of the positions of trains in the railway system as such positions are electronically reported by signals present throughout the railway system. In addition, in order to provide for safe traffic control and avoid accidents or collisions, signals are provided throughout the track network, or interlocks.

The interlocks may be controlled from the CTC in any of various different ways, including, e.g., direct wiring, by pulse codes sent over a wire to distant locations, etc. In addition, interlocks can also be controlled by a native mechanism detecting presence of a train on the track. That is, when a train occupies a certain section of track, the interlock prevents other trains from proceeding onto the same

Further, there are additional safety systems on the train itself, such as automatic train control (ATC). A common feature of many of such automated train control systems is the need for constant or nearly constant

WABTEC EX1023

communications between onboard train control systems and an offboard hub radio connected to control equipment located along the wayside or in a central office. In some systems, the offboard control equipment generates movement authorities which authorize the train to move in one or more sections of track. In some systems, the offboard equipment informs the onboard train control system of the presence of other trains in the vicinity. In yet other systems, the offboard equipment provides information such as temporary speed restrictions and work zone information to the onboard train control system. Such systems protect against a number of human errors on the part of the train drivers, one of the basics of the system being that the train is provided with a computer which receives traffic information, such as stop signals and speed limits, from a plurality of transmitters along the track. Thus, the computer may bring the train to a standstill regardless of what the train driver does when the train arrives at a stop signal.

Even with all these safety features present in a railway system, railway accidents occur, with many being fatal. For example, one study reported that there were 39 roadway worker accidents that occurred between January 1997 and the end of 2011, in which 41 roadway workers perished

WABTEC EX1023

while attending to tasks such as inspection, construction, maintenance, or repair of railroad track, bridges, roadway, signal and communication systems, electric traction systems, roadway facilities or roadway maintenance machinery on or near track, operating as flagmen or watchmen/lookouts for other roadway workers, etc.

There remains a need for further safety measures to protect the lives of railway workers.

BRIEF SUMMARY

This disclosure provides tools (in the form of systems, apparatuses, methodologies, etc.) for enhancing railway traffic control, as supplemental measures directed to safety of railway workers.

For example, a centralized railway control system may be adapted (such as via computer hardware, software, or a combination) to include providing on a user terminal a user interface including a block placing part to place a block on one or more specified track sections to permit a railway field worker to enter the track sections while blocking railway traffic to said track sections, generating a removal code and transmitting the removal code to the electronic contact address of the railway field worker, and permitting

WABTEC EX1023

the block to the track sections to be removed only upon entry of the removal code in the centralized railway control system. Such process may be largely automated via programming such that upon placement, by the block placing part, of the block of railway traffic to the specified track sections, the removal code is automatically transmitted, by a code generation part, to the electronic contact address of the railway field worker, and the block of railway traffic to the specified track sections remains in place in the centralized railway control system until the entry of the removal code in the centralized railway control system to cause a block removal part to remove the block on said one or more track sections.

In another aspect, the adaptation may include a RTC user interface to permit a user (e.g., train dispatcher) to specify a track section(s) to be blocked, specify an instruction to the centralized railway control system to block the railway traffic to the specified track section(s), and specify identifying information of the railway field worker performing (or to be performing) work in the specified track section(s).

In another aspect, the adaptation includes a block removal user interface to permit a user to enter the removal

WABTEC EX1023

code to cause the block removal part to remove the block on said one or more track sections. Such block removal user interface may be provided in any of various ways. For example, the block removal user interface may be provided within a mobile application or web page through which the railway field worker can enter the removal code manually or orally (i.e. including a voice or speech interface part). As another example, the removal code may be embedded in a link in a message transmitted by email or messaging to the electronic contact address of the railway field worker, and the railway field worker can simply cause the removal code to be entered by activating the link in the message received by the railway field worker. In another example, the block removal user interface may be provide on the same user terminal on which the block placing part is disposed. Further, a voice or speech interface part may be disposed on the system-side to process a voice message (such as received via a telephone call from the railway field worker, extract the removal code from the voice message, and enter the block removal code. In each instance, the block of railway traffic to the specified track sections remains in place in the centralized railway control system until the entry of the removal code through the block removal user interface.

WABTEC EX1023

Further, entry of the removal code may also require entry of identification of the user entering the removal code, and removal of the block may also require not only the removal code but also confirmation that the user entering the removal code is authorized to remove the block. The block removal user interface may further require, in addition to entry of the removal code, the user to specify that confirmation that the track sections have been cleared has been obtained from the railway field worker associated with the block, before the block removal user interface permits the removal code to be transmitted to the block removal part.

In another aspect, the system may include a railway control database registering block identifying information, including block limits identifying the one or more blocked track sections, along with the removal code for removing the block of the track sections. Further, the railway control database may register additional information, such as identification of the user who specified the instruction to block the track sections, notes specifying reasons for the block, date and time at which the block was placed, etc. The railway control database may further register block removal information identifying date and time at which the

WABTEC EX1023

block was removed and identifying the user who entered the removal code and who specified that confirmation that the track sections have been cleared was obtained from the railway field worker associated with the block.

BRIEF DESCRIPTION OF THE DRAWINGS

The aforementioned and other aspects, features and advantages can be more readily understood from the following detailed description with reference to the accompanying drawings wherein:

Fig. 1A shows a block diagram illustrating a railway control system, in accordance with an exemplary embodiment;

Fig. 1B shows a block diagram illustrating a railway control system, in accordance with another exemplary embodiment;

Fig. 2 shows a block diagram of a railway traffic control apparatus, in accordance with an exemplary embodiment;

Fig. 3A shows a block diagram of an exemplary configuration of a terminal;

Fig. 3B shows a block diagram of an exemplary configuration of a computing device;

WABTEC EX1023

Fig. 4 shows a schematic diagram illustrating communication flow in the system shown in Fig. 1A or in the system shown in Fig. 1B;

Fig. 5 shows an example of a graphical portrayal of a railway network;

Figs. 6-9 show examples of a user interface display, in accordance with an exemplary embodiment;

Fig. 10 shows an example of a user interface display that may be provided on the field worker side for triggering block removal;

Fig. 11 shows another example of a user interface display;

Fig. 12 shows a flow chart illustrating a block placement method, in accordance with an exemplary embodiment;

Fig. 13 shows a flow chart illustrating a block removal method, in accordance with an exemplary embodiment;

DETAILED DESCRIPTION

This patent specification describes tools (in the form of methods, apparatuses and systems) that controls train traffic within a railway system using, but not limited to,

WABTEC EX1023

standardized rules or timetables described in the Background section of this specification.

In describing exemplary embodiments illustrated in the drawings, specific terminology is employed for the sake of clarity. However, the subject matter of this patent specification is not intended to be limited to the specific terminology so selected and it is to be understood that each specific element includes all technical equivalents that operate in a similar manner.

The drawings show examples of implementations of the subject matter of this patent disclosure in several computing environments. However, it should be understood that the subject matter of this disclosure can be utilized by any computing device including but not limited to PDAs, cell phones, personal, notebook and workstation computers, kiosks, other information terminals, WIC pager etc. In addition, the subject matter of this disclosure might be provided as services in a modular fashion by other devices connected by a communication network.

Referring now to the drawings, wherein like reference numerals designate identical or corresponding parts throughout the several views, there is described tools (systems, apparatuses, methodologies, computer program

WABTEC EX1023

products, etc.) that can be integrated in a railway traffic control system.

Fig. 1A show schematically an exemplary embodiment in which a system 100A includes a railway traffic control terminal 105, a rail personnel data 104 and a terminal 103, each connected to the network 102. **Fig. 1B** shows schematically another exemplary embodiment, in which rail personnel contact data 104 is accessed directly by the railway traffic control apparatus 105. While only one terminal is connected to the network 102 in the example shown in **Fig. 1A** as well as in the example shown in **Fig. 1B**, it should be appreciated that the network environment can have an arbitrary number of devices (of various type).

The network 102 can be any data network, a local area network, a wide area network or any type of network such as an intranet, an extranet (for example, to provide controlled access to external users, for example through the Internet), a private or public cloud network, the Internet, etc., or a combination thereof. Further, other communications links (such as a virtual private network, a wireless link, etc.) may be used as well for the network 102. In addition, the network 102 preferably uses TCP/IP (Transmission Control Protocol/Internet Protocol), but other protocols such as

WABTEC EX1023

SNMP (Simple Network Management Protocol) and HTTP (Hypertext Transfer Protocol) can also be used. How devices can connect to and communicate over networks is well-known in the art and is discussed for example, in "How Networks Work", by Frank J. Derfler, Jr. and Les Freed (Que Corporation 2000) and "How Computers Work", by Ron White, (Que Corporation 1999), the entire contents of each of which are incorporated herein by reference.

The rail personnel 104 is a database that can be either connected to or inside the railway traffic control terminal 105. The rail personnel contact data 104 stores information regarding the maintenance workers used for traveling, inspecting and working on blocked rails. For example, the information stored can include be name of the maintenance worker, primary contact, secondary contact, previous assignment, current assignment, etc. as shown via user interface display in **Fig. 11**.

Fig. 2 shows a terminal 100A which is configured (such as via one or more programs of instructions executable by a processor of a computer or another electronic device) with a railway traffic blocking apparatus 101 to include a block placer 101A, a code generator 101B, a block remover 101C and a user interface 101D. The terminal 100A can be any

WABTEC EX1023

electronic device including a processor, storage and display, such as shown by way of examples in **Figs. 3A** and **3B**.

The railway traffic blocking apparatus is programmed to control the traffic of an entire railway network. The block placer 101A is configured to stop traffic within a certain length of rail line. That is, once a block is placed, no train can traverse the blocked section of rail. For example, in the case of a railway controlled by multiple interlocks, the block placer 101A causes those interlocks to output a STOP signal, therefore, stopping any train traffic within the rails controlled by that interlock. By doing this, maintenance workers and railway personnel can travel, inspect and work on the rails without the danger of oncoming train traffic. Trains that are scheduled to traverse said blocked tracks either come to a complete stop, electronically or mechanically, before passing the interlock or are rerouted using tracks that are not in a blocked state. However, this disclosure is not limited to a railway traffic control system implementing interlocks. This system can be implemented on any configuration in which there is control of the traffic of a railway system.

WABTEC EX1023

The code generator 101B is configured to produce a random cipher which is stored on the terminal. A new random cipher may be generated for each instance of traffic blocking. This random cipher is then sent to another terminal belonging to the railway personnel who are scheduled to travel, inspect or work on the specific rails being blocked.

The block remover 101C is programmed to remove the previous block, or plurality of blocks set by the block placer 101A. The block remover 101C is dependent on the code produced by the code generator 101B. As described in detail below, a block cannot be removed with the input of the release code.

The user interface 101D is configured preferably for the ease of use for the railway traffic controller. As shown by way of examples in **Figs. 6-9** and **11**, the user interface 101D displays information and tools needed to enable/disable blocks on rail sections.

The user interface 101D may be a mobile application, a web page or some other software component, on a terminal device. Such terminal preferably is configured to communicate through a computer or data network to obtain content and data from an external source. However, it

WABTEC EX1023

should be appreciated that the inventive aspects described herein can be employed even if the mobile device is not configured to connect to a data network, and/or is not connected to a data network.

An example of a configuration of a user terminal (e.g., the terminal 103) or computer is shown schematically in **Fig. 3A**. In the example of **Fig. 3A**, terminal device 200 includes a controller (or processor) 202 that communicates with a number of other components, including storage 203, display 204, input/output (such as mouse, touchpad, stylus, microphone and/or speaker with voice/speech interface and/or recognition software, etc.) 205 and a network interface 206, by way of an internal bus 201.

The storage 203 can provide storage for program and data, and may include a combination of assorted conventional storage devices such as buffers, registers and memories [for example, read-only memory (ROM), programmable ROM (PROM), erasable PROM (EPROM), electrically erasable PROM (EEPROM), static random access memory (SRAM), dynamic random access memory (DRAM), non-volatile random access memory (NOVRAM), etc.].

The network interface 206 provides a connection (for example, by way of an Ethernet connection or other network

WABTEC EX1023

connection which supports any desired network protocol such as, but not limited to TCP/IP, IPX, IPX/SPX, or NetBEUI) to a network (e.g., network 102) to enable the terminal device to communicate with another device through the network.

Fig. 3B shows an exemplary constitution of a computer 300 which can be configured by appropriate programming to operate as the railway traffic control apparatus 105 (**Fig. 1A**). The computer 300 shown in **Fig. 3B** includes a processor 302, and various elements connected to the processor 302 by an internal bus 301, such as a memory 303, display 304, keyboard 305 and network interface 306. The processor 302 processes incoming requests transmitted through the network interface 306. The network interface 306 enables the railway traffic control terminal to communicate with other network-connected devices such as a terminal (e.g., the terminal 103 of **Fig. 1A** or **Fig. 1B**) and receive data or service requests.

Each of the terminal 103, rail personnel database 104 and railway traffic control apparatus 105 can be configured to communicate with each other through the network 102. The railway traffic control terminal 105 can be configured to request data from the rail personnel contact data 104 through the network 102, as shown in **Fig. 4**. When the railway traffic control apparatus 105 initiates a block on a

WABTEC EX1023

track section, the railway traffic control apparatus 105 may also designate a worker in associate with the block on the track section. With this information, the railway traffic control apparatus 105 requests the specific personnel data pertaining to the designated worker. The rail personnel contact data retrieves the requested personnel data and sends it to the railway traffic control apparatus 105. By receiving this data, the railway traffic control apparatus 105 may then generate a release code and save it to an internal storage.

The release code is then sent to the terminal 102. This terminal 102 is the contact associated with the designated worker, and the electronic address of this terminal is found within the personnel data received from the rail personnel contact data 104. By this system, only the railway traffic control apparatus 105 and terminal 102 receive the release code generated by the railway traffic control apparatus 105.

Additionally, **Fig. 4** shows the communication between the terminal 102 and the railway traffic control apparatus 105 in the event that a block on a certain track is to be lifted. In order for a block on a certain track to be lifted, the release code has to be input into the railway traffic control apparatus. The terminal 102 sends the

WABTEC EX1023

release code to the railway traffic control apparatus 105. The release code is then input into the block remover 101C. After which, the block is removed and traffic to that section of rail is then allowed.

Fig. 5 illustrates an example of a railway network 500. Labeled are interlocks A-F which control sections of railway of the railway network 500. For example, the rail traffic controller might choose to block the section of rail corresponding to the track between interlock A and interlock B. This way, train traffic between those two interlocks in prohibited. The railway network is present on screen of the railway traffic control terminal 105 at all times for the convenience of the rail traffic controller. By being on screen at all times, the rail traffic controller knows the status of certain sections of rail in real time.

As shown in the example illustrated in **Fig. 5**, the railway between interlocks A and B, and interlocks C, D and E is blocked. Train traffic is prohibited between these sections and shown to the railway traffic controller on screen. As further explained below, the railway traffic controller can lift the blocks on these sections of track if the release code is input into the railway traffic control terminal 105.

WABTEC EX1023

Fig. 6 is an exemplary illustration of the user interface of the railway traffic control terminal 105. The railway traffic controller may place blocks on any section of traffic using this user interface. In this exemplary embodiment, the train traffic controller inputs authority, worker and block limits. This information corresponds to the train traffic controller username, maintenance worker designated to work on the specific blocked track and the sections of track being blocked, respectively. In addition, the railway traffic control terminal 105 then timestamps the order once the block is placed.

Once the block is put into place, the corresponding section on the railway network 500 displays the section of track being blocked. In addition, the railway traffic control terminal 105 generates a release code, stores the release code, and sends the code to the maintenance worker designated for track work, i.e. maintenance worker 12. As shown in **Fig. 6**, the railway traffic controller may place blocks on track sections but may not remove the track blocks without the input of the release code in the allotted area labeled release code. **Fig. 6** shows that the remove action is dashed out, meaning it cannot be selected (unless a release code is first entered). In the example illustrated in **Fig.**

WABTEC EX1023

6, it is shown that only one worker, maintenance worker 12 is designated to work on track Section A to Section B. However, as shown in later embodiments, the train traffic controller is not limited to the amount of maintenance workers designated for any track section. In addition, the train traffic controller may apply a block to any number of additional track sections.

The blocks are then tabulated by the railway traffic control apparatus 105 as depicted in **Fig. 7**. The table in **Fig. 7** lists all the blocks that are in place and in addition lists blocks that were previously set. The information that can be found in this table includes, but is not limited to, the type of work being done on the track sections, when the block was placed, who is designated to work on the sections of track, who placed the block, when was the block removed and who removed the block.

Additional information can be accessed though this table by highlighting a cell of the table and selecting info, as shown in **Fig. 7**. For example, by highlighting the cell labeled maintenance worker 12 and selecting info, the train traffic controller may access the bio of the maintenance worker 12, as shown in detail below. The train traffic controller may also highlight a different cell, such

WABTEC EX1023

as the limits cell label "Sec. A - Sec. B". By selecting this cell and selecting the info command, the past history of maintenance work and operation of the section(s) may be displayed to the train traffic controller.

Fig. 8 shows the user interface of the railway traffic control terminal 105 as the railway traffic controller inputs the release code to remove the block on certain track sections. In the exemplary embodiment of **Fig. 8**, the remove option is now able to be selected with the input of the release code provided by the designated worker assigned for track work, maintenance worker 12.

Without the input of the release code, the remove option is not available to be selected. In a different embodiment, the release code may be obtained from the storage of the railway traffic control terminal 105.

In the case where there are multiple maintenance workers assigned to a certain track section, there may be provided one release code to one, multiple or all of the maintenance workers assigned. That is, The train traffic controller may input that the release code be specified to one maintenance worker, preferably a supervisor or foreman, to multiple maintenance workers or to all of the maintenance workers assigned to work on a given track section. Also, in

WABTEC EX1023

another embodiment, in a case where there are multiple workers assigned for a certain track section, there may be provided multiple unique release codes which would then all be required to be input into the train traffic control terminal 105 by the train traffic controller in order to be able to remove blocks on certain track sections.

In another embodiment, the train traffic controller may be asked to verify that a railway section is cleared before receiving the option to remove a train block. As shown in **Fig. 9**, the user interface displayed by the railway traffic control terminal 105 does not allow a removal of a block until the option corresponding to "Railway Section Cleared" is checked. This option allows for a further protection of the maintenance workers assigned to the block track sections.

Fig. 10 shows an exemplary illustration of a message sent by the railway traffic control terminal 105 to a terminal 103 belonging to a corresponding address of a maintenance worker assigned to work on a blocked track. The message is meant to deliver the release code to the maintenance worker assigned to work on a blocked track. In addition to relaying the code, the message may include, but not limited to, information regarding the section of track

WABTEC EX1023

that is being blocked, the date and time that the track was blocked, who initiated the track block and also links to quickly respond to the message. By selecting one the links embedded in the message, the terminal 103 sends the release code to the railway traffic control terminal 105. The code can be transmitted through, but not limited to, text message, e-mail or voice message. In the present embodiment being illustrated, the terminal 103 is depicted as a mobile phone. The terminal 103 could be any communication device such as, but not limited to, mobile phone or smartphone, tablet, WIC pager, PDA, etc.

In another embodiment, once the rail traffic controller unblocks a section of track, the railway traffic control terminal 105 may send a message to the worker, or plurality of workers, associated with working on the previously blocked track in order to inform them that the track has been unblocked and is no longer a safe environment to work in.

Fig. 11 depicts an exemplary embodiment of a profile of a maintenance worker. This profile may be accessed directly by highlighting the corresponding maintenance worker cell in the table depicted in **Fig. 7** and selecting the info tab. This command brings up the profile and the maintenance

WABTEC EX1023

worker and displays information regarding the worker including, but not limited to, the name, age, primary contact, secondary contact, e-mail, last assignment and current assignment of the maintenance worker. Additionally in this screen, the railway traffic controller may contact the maintenance worker directly using one of the plurality of addresses provided.

Next, the method of placing a block on a track section will be described with reference to **Fig. 12**. In S1201, the rail traffic controller selects the sections to be blocked using the railway traffic control terminal 105. Once the block limits are designated and sent, the railway traffic control terminal 105 established office interlocking immediately in S1202. That is, the railway traffic control terminal 105 immediately sends a signal to the corresponding interlocks corresponding to the section of track designated to be blocked. Additionally, the railway traffic control terminal 105 generates and saves a random secret code in S1203.

After a request to block a certain section of track is sent, the railway traffic control terminal 105 checks if there is one or more of the sections currently has a block placed, as shown in S1204. If one or more of the designated

WABTEC EX1023

sections does not have a block placed, then the railway traffic control terminal 105 opens a user interface for the railway traffic controller to designate a type of block to set and a maintenance worker for the blocked section in S1206. If the railway traffic control terminal sees that a block is already in effect (S1205), then the railway traffic control terminal 105 allows the railway traffic controller to change the existing block type and maintenance worker using the same interface. The interface is then opened in S1206.

The railway traffic controller then inputs the type of block and assigns a worker to work on the blocked section. The railway traffic controller also has the option to block the track for purposes of an emergency and not necessarily for maintenance work in S1207. Once the railway traffic controller assigns a block type and/or a corresponding maintenance worker, the railway traffic control terminal 105 checks the status of the selected block in S1208. If the current selected section has an existing block, the railway traffic control terminal 105 waits for a response from the interlocks of the corresponding section to send an indication that a new block can be established in S1209. Once this indication is received in S1210, the railway

WABTEC EX1023

traffic control terminal 105 enables the place button of the user interface (S1211). If the selected section has no previous active block, the railway traffic control terminal 105 immediately enables the place button on the user interface.

Once the place button is selected, the railway traffic control terminal 105 generates a place time and enables safety measures so that the block cannot be removed without the input of the secret code generated (S1212). Finally, the railway traffic control terminal 105 sends the secret removal code to the corresponding one or more maintenance workers if the railway traffic controller has selected maintenance workers for the given block.

Fig. 13 describes a method for removing a block placed on a section of track. In S1301, the railway traffic controller selects an existing block by using either the network rail map, shown in **Fig. 5**, the remove tool, shown in **Figs. 6, 8 and 9**, or the summary table, shown in **Fig. 7**. The remove button is disabled without the input of the secret code from either the maintenance worker of the railway traffic control terminal 105 (S1302). In S1303, the railway traffic control terminal 105 checks if there is a maintenance worker that is eligible to transmit the random

WABTEC EX1023

secret code. If there is an eligible maintenance worker available, the maintenance worker transmits the random secret code to the railway traffic control center 105 (S1304). If there is no maintenance worker available to transmit the random secret code, the code can be retrieved from the train traffic control terminal 105 by the train traffic controller (S1305).

Once the secret code is received, the secret code may be input to the designated field in S1306. The railway traffic control terminal 105 checks the secret code with the code saved in its memory in S1307. If the code is incorrect, the railway traffic control terminal 105 will prompt the user to input the code again. If the code is correct, the railway traffic control terminal will prompt the user to enter information into any remaining fields in S1308. In S1309, the railway traffic control terminal 105 checks that all information input into all fields is correct and that all fields are filled in. After this check is performed by the railway traffic control terminal 105, the remove button is enabled on the form (S1310) and the railway traffic controller may remove the block on the corresponding track section.

The aforementioned specific embodiments are

WABTEC EX1023

illustrative, and many variations can be introduced on these embodiments without departing from the spirit of the disclosure or from the scope of the appended claims. For example, elements and/or features of different examples and illustrative embodiments may be combined with each other and/or substituted for each other within the scope of this disclosure and appended claims.

The orders in which the steps are performed in the aforementioned methods are not limited to those shown in the examples of **Figs. 12 and 13**, and may be switched as long as similar results are achieved. Also, it should be noted that the methods illustrated in the examples of **Figs. 12 and 13** may be implemented using any of the embodiments shown in **Figs. 1A-1B**.

Further, conventional systems can be modified to include the aspects described herein. As an example, a means may be added to a conventional interlock system by which the railway worker has partial control of the interlock system at the times that maintenance work is needed on a certain train block. In such modification, a system, apparatus and/or method may be provided to control the interlocks in a railway system as an interface between the railway workers and the interlock control. Thus, in a case in which

WABTEC EX1023

maintenance is to be performed on a certain rail block, which is controlled by an interlock, the interlock can be configured to send out a stop signal for all incoming trains, to block train traffic to such portion of the rail system. In addition, once the interlock is placed in a "stop traffic" state, a release code is transmitted to an electronic contact address corresponding to the railway worker.

Once a block has been placed, the interlock remains in a blocked sate, until the maintenance worker supplies the release code, which was received at the time the interlock started, and the release code is entered in the interlock control system. So long as the block is in place, the maintenance worker can perform on-track work, without interference of oncoming train traffic. After the maintenance worker finishes the assigned work and is clear of the train tracks, he/she may then supply the interlock control system with the release code, and the interlock control system in turn can release the interlock over the block.

Accordingly, the railway worker has more control over the traffic through the rail block in which the worker is working, and fatal on-track accidents can be reduced.

WABTEC EX1023

Additional variations may be apparent to one of ordinary skill in the art from reading U.S. Provisional Application No. 61/893,547, filed October 21, 2013 and entitled "SYSTEM, APPARATUS AND METHOD FOR RAILWAY TRAFFIC CONTROL", the entire contents of which are incorporated herein by reference.

WABTEC EX1023

What is claimed is:

1. A centralized railway control system comprising:

a rail personnel contact database registering, for each railway personnel, an electronic contact address of the railway personnel; and

a railway traffic control apparatus for controlling access to railway tracks, said railway traffic control apparatus comprising a processor, a non-transitory medium storing one or more programs of executable instructions, and a network interface through which the railway traffic control apparatus communicates via a network with a user terminal,

wherein execution of said one or more programs of executable instructions configures the processor to include:

a block placing part to place a block on one or more specified track sections to permit a railway field worker to enter the track sections while blocking railway traffic to said track sections;

a code generation part to generate a removal code, retrieve the electronic contact address of the railway field worker from the rail personnel contact database, and transmit the removal code to the electronic contact address of the railway

WABTEC EX1023

field worker; and

a block removal part to remove only upon entry of the removal code, the block placed by the block placing part on said one or more track sections.

2. The centralized railway control system of claim 1, wherein the railway traffic control apparatus further comprises:

a RTC user interface to permit a user to specify said one or more track sections to be blocked, specify an instruction to the centralized railway control system to block the railway traffic to the specified track sections, and specify identifying information of the railway field worker to be performing work in the specified track sections.

3. The centralized railway control system of claim 1, further comprising:

a railway control database registering block identifying information, including block limits identifying the one or more blocked track sections, along with the removal code for removing the block of the track sections.

WABTEC EX1023

4. The centralized railway control system of claim 1, further comprising:

a railway control database registering (a) identification of the user who specified the instruction to block the track sections and (b) block identifying information, including block limits identifying the one or more blocked track sections, notes specifying reasons for the block, and date and time at which the block was placed.

5. The centralized railway control system of claim 1, wherein upon placement by the block placing part of the block of railway traffic to said one or more specified track sections, the code generation part transmits the removal code to the electronic contact address of the railway field worker, and the block of railway traffic to said one or more specified track sections remains in place in the centralized railway control system until the entry of the removal code in the centralized railway control system to cause the block removal part to remove the block on said one or more track sections.

6. The centralized railway control system of claim 1, wherein the railway traffic control apparatus further

WABTEC EX1023

comprises:

a block removal user interface to permit a user to enter the removal code to cause the block removal part to remove the block on said one or more track sections,

wherein the block of railway traffic to said one or more specified track sections remains in place in the centralized railway control system until the entry of the removal code through the block removal user interface.

7. The centralized railway control system of claim 6, wherein the block removal user interface further requires, in addition to the entry of the removal code, the user to specify that confirmation that the track sections have been cleared has been obtained from the railway field worker associated with the block, before the block removal user interface permits the removal code to be transmitted to the block removal part, and

the centralized railway control system further comprises a railway control database registering (a) block identifying information identifying the one or more blocked track sections, date and time at which the block was placed and identifying information the railway field worker associated with the block, and (b) block removal information

WABTEC EX1023

identifying date and time at which the block was removed and identifying the user who entered the removal code and specified that confirmation that the track sections have been cleared was obtained from the railway field worker associated with the block.

8. The centralized railway control system of claim 1, further comprising:

a voice processing part configured to receive a voice message and extract the removal code from the voice message.

9. The centralized railway control system of claim 1, wherein the code generation part transmits an electronic message to the electronic contact address of the railway field worker, and the electronic message transmitted to the electronic contact address of the railway field worker includes the removal code and includes an embedded link for activating a return transmission of the removal code to the block removal part of the centralized railway control system.

10. A railway traffic control apparatus for controlling access to railway tracks, said railway traffic

WABTEC EX1023

control apparatus comprising:

a block placing part to place a block on one or more selected track sections to permit a railway field worker to enter the track sections while blocking railway traffic to said track sections;

a code generation part to generate a removal code, determine an electronic contact address of the railway field worker by accessing a rail personnel contact database registering, for each railway personnel, electronic contact information of the railway personnel, and transmit the removal code to the electronic contact address of the railway field worker; and

a block removal part to remove only upon entry of the removal code, the block placed by the block placing part on said one or more track sections for the railway field worker.

11. The railway traffic control apparatus of claim 10, further comprising:

a RTC user interface to permit a user to specify said one or more track sections to be blocked, specify an instruction to the centralized railway control system to block the railway traffic to the specified track sections,

WABTEC EX1023

and specify identifying information of the railway field worker to be performing work in the specified track sections.

12. The railway traffic control apparatus of claim 10, wherein block identifying information, including block limits identifying the one or more blocked track sections, is registered in a railway control database, along with the removal code for removing the block of the track sections.

13. The railway traffic control apparatus of claim 10, wherein block identifying information, including block limits identifying the one or more blocked track sections, notes specifying reasons for the block, and date and time at which the block was placed, are registered in a railway control database, along with identification of the user who specified the instruction to block the track sections.

14. The railway traffic control apparatus of claim 10, wherein upon placement by the block placing part of the block of railway traffic to said one or more specified track sections, the code generation code transmits the removal code to the electronic contact address of the railway field

WABTEC EX1023

worker, and the block of railway traffic to said one or more specified track sections remains in place in the centralized railway control system until the entry of the removal code in the centralized railway control system to cause the block removal part to remove the block on said one or more track sections.

15. The railway traffic control apparatus of claim 10, further comprising:

a block removal user interface to permit a user to enter the removal code to cause the block removal part to remove the block on said one or more track sections,

wherein the block of railway traffic to said one or more specified track sections remains in place in the centralized railway control system until the entry of the removal code through the block removal user interface.

16. The railway traffic control apparatus of claim 15, wherein the block removal user interface further requires, in addition to the entry of the removal code, the user to specify that confirmation that the track sections have been cleared has been obtained from the railway field worker associated with the block, before the block removal user

WABTEC EX1023

interface permits the removal code to be transmitted to the block removal part, and

block identifying information identifying the one or more blocked track sections, date and time at which the block was placed and identifying information the railway field worker associated with the block is registered in a railway control database, along with block removal information identifying date and time at which the block was removed and identifying the user who entered the removal code and specified that confirmation that the track sections have been cleared was obtained from the railway field worker associated with the block.

17. The railway traffic control apparatus of claim 10, further comprising:

a voice processing part configured to receive a voice message and extract the removal code from the voice message.

18. The railway traffic control apparatus of claim 10, wherein the code generation part transmits an electronic message to the electronic contact address of the railway field worker, and the electronic message transmitted to the electronic contact address of the railway field worker

WABTEC EX1023

includes the removal code and includes an embedded link for activating a return transmission of the removal code to the block removal part of the centralized railway control system.

19. A method for a centralized railway control system to control access to railway tracks, the method comprising:

providing a user interface on a user terminal including a block placing part to place a block on one or more specified track sections to permit a railway field worker to enter the track sections while blocking railway traffic to said track sections;

generating a removal code, determining an electronic contact address of the railway field worker by accessing a rail personnel contact database registering, for each railway personnel, electronic contact information of the railway personnel, and transmitting the removal code to the electronic contact address of the railway field worker; and

permitting the block to said one or more track sections to be removed only upon entry of the removal code in the centralized railway control system.

WABTEC EX1023

ABSTRACT

Tools (such as system, apparatus, methodology, etc.) may be provided to control traffic over a railway track section, when a railway worker is working on or near the track section. Move particularly, when traffic over the track section is to be blocked, a release code is generated and sent to an electronic contact address of the railway worker. Traffic through the track section is blocked until the release code is entered in the system.

WABTEC EX1023

FIGURE 1A

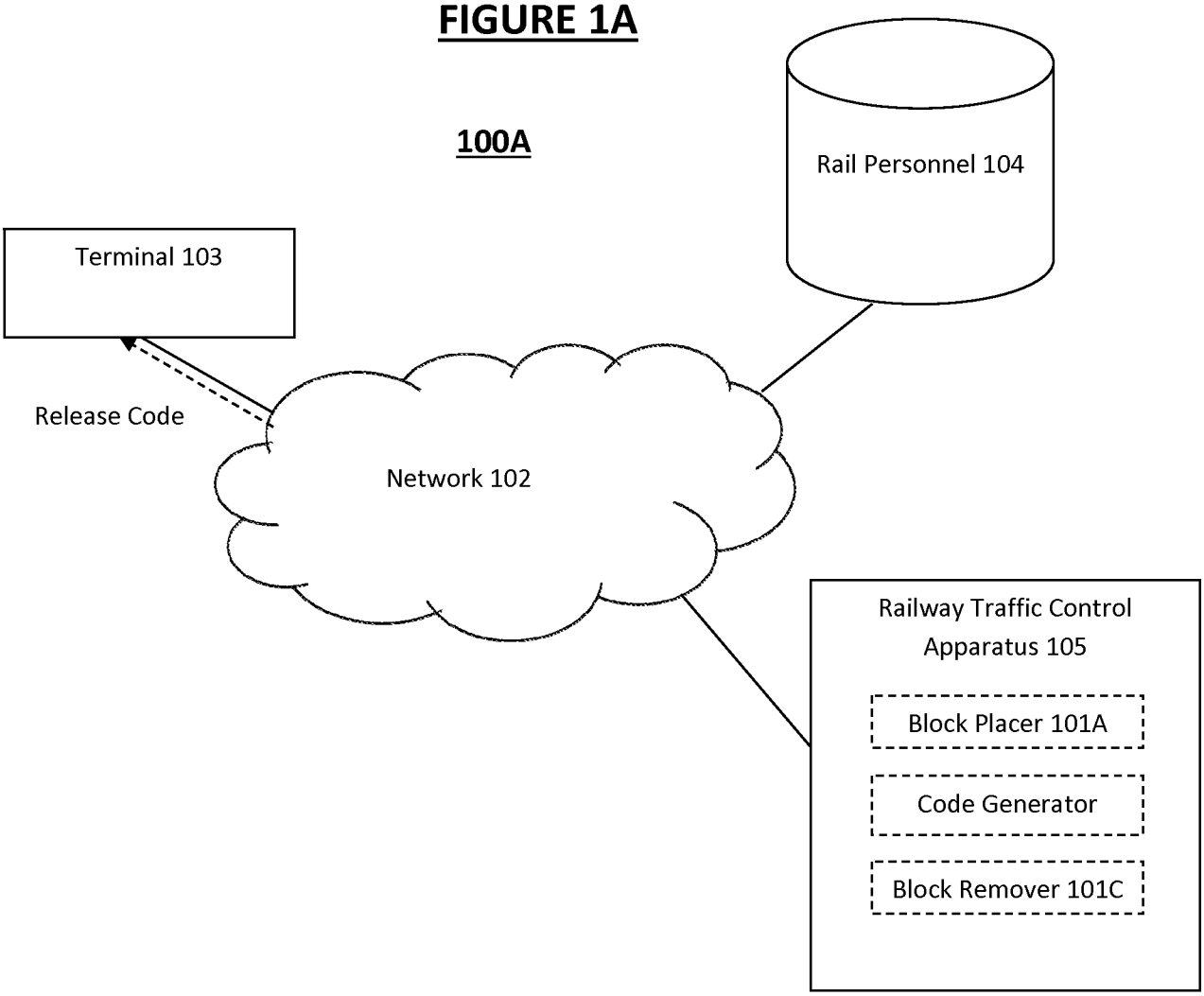
100A
Rail Personnel 104
Terminal 103
Release Code
Network 102
Railway Traffic Control Apparatus 105
Block Placer 101A
Code Generator
Block Remover 101C

FIGURE 1B

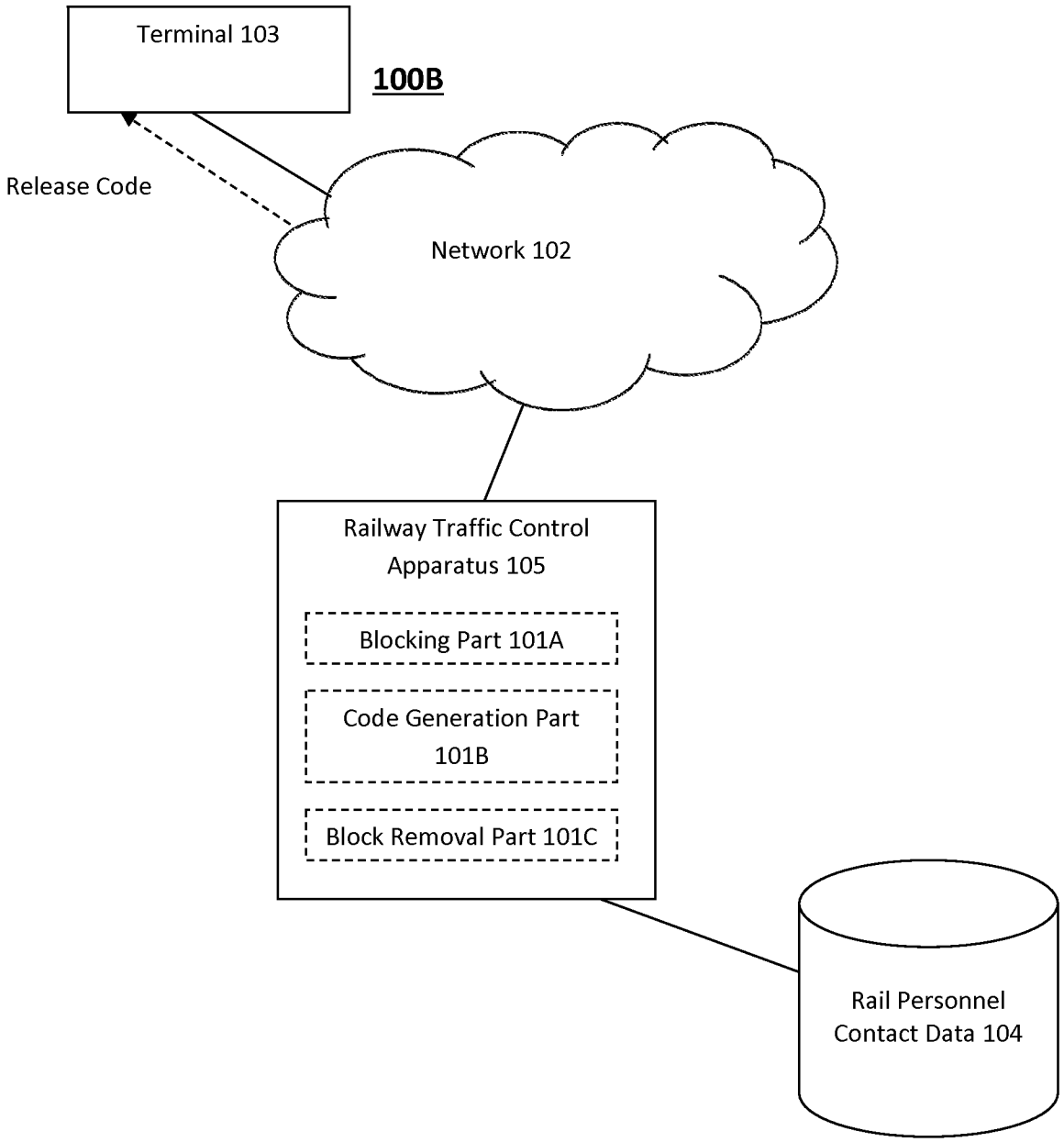
Terminal 103
100B
Release Code
Network 102
Railway Traffic Control Apparatus 105
Blocking Part 101A
Code Generation Part 101B
Block Removal Part 101C
Rail Personnel Contact Data 104

FIGURE 2

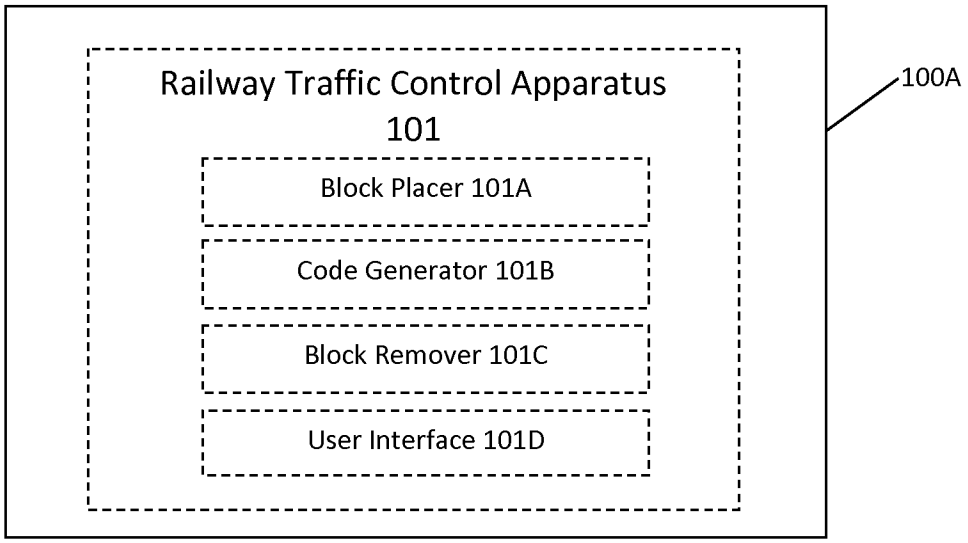

FIGURE 3A

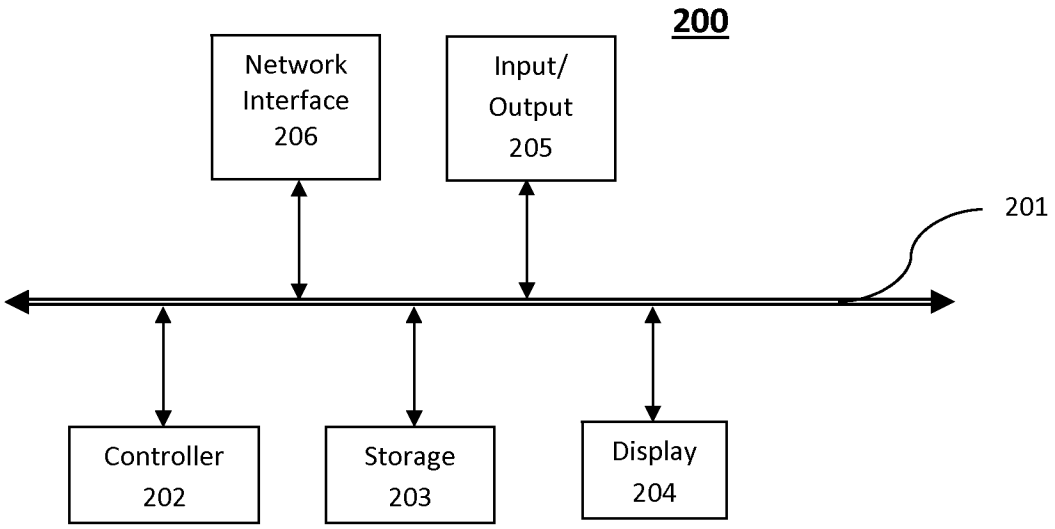

FIGURE 3B

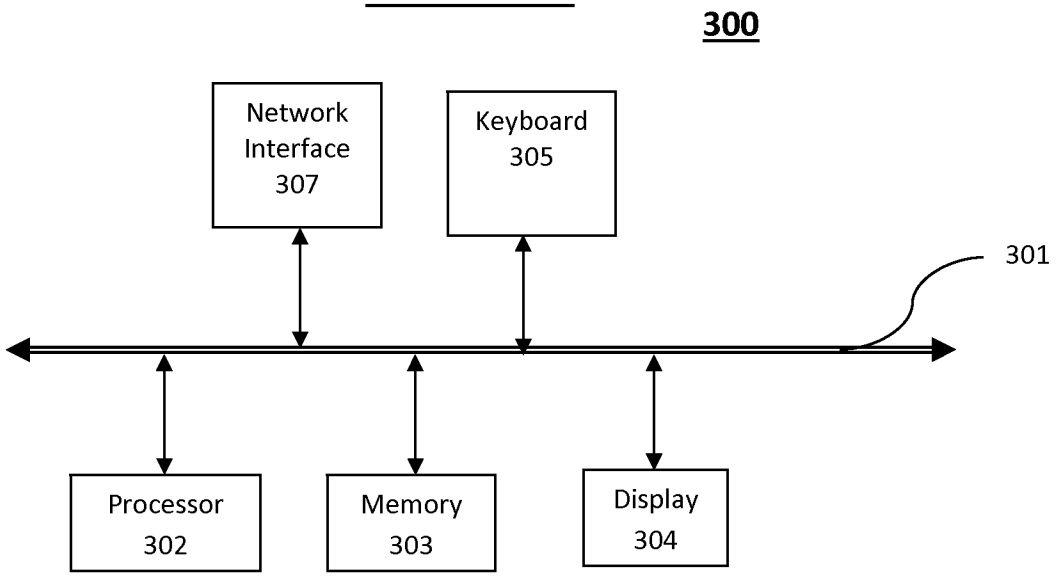
300
Network Interface 307
Keyboard 305
301
Processor 302
Memory 303
Display 304

FIGURE 4

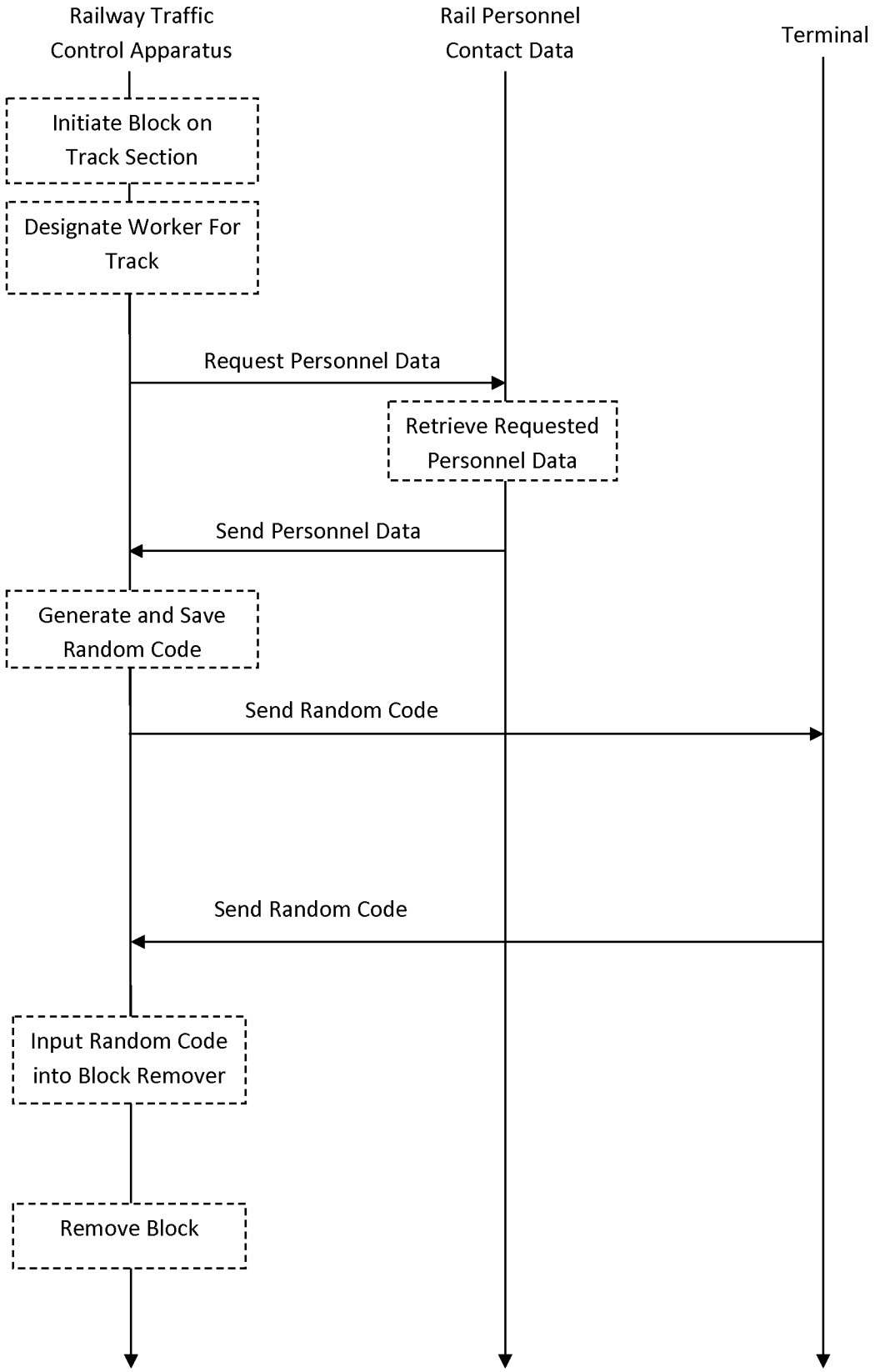
Railway Traffic Control Apparatus
Rail Personnel Contact Data
Terminal
Initiate Block on Track Section
Designate Worker For Track
Request Personnel Data
Retrieve Requested Personnel Data
Send Personnel Data
Generate and Save Random Code
Send Random Code
Send Random Code
Input Random Code into Block Remover
Remove Block

FIGURE 5

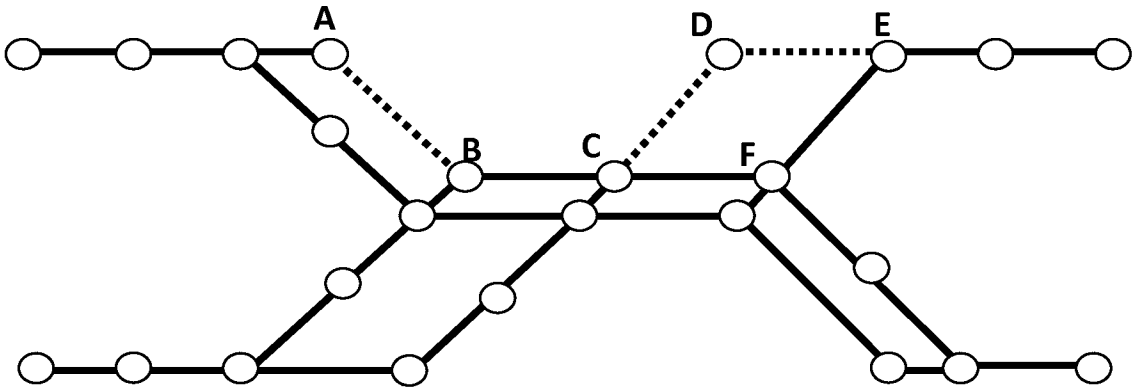

FIGURE 6

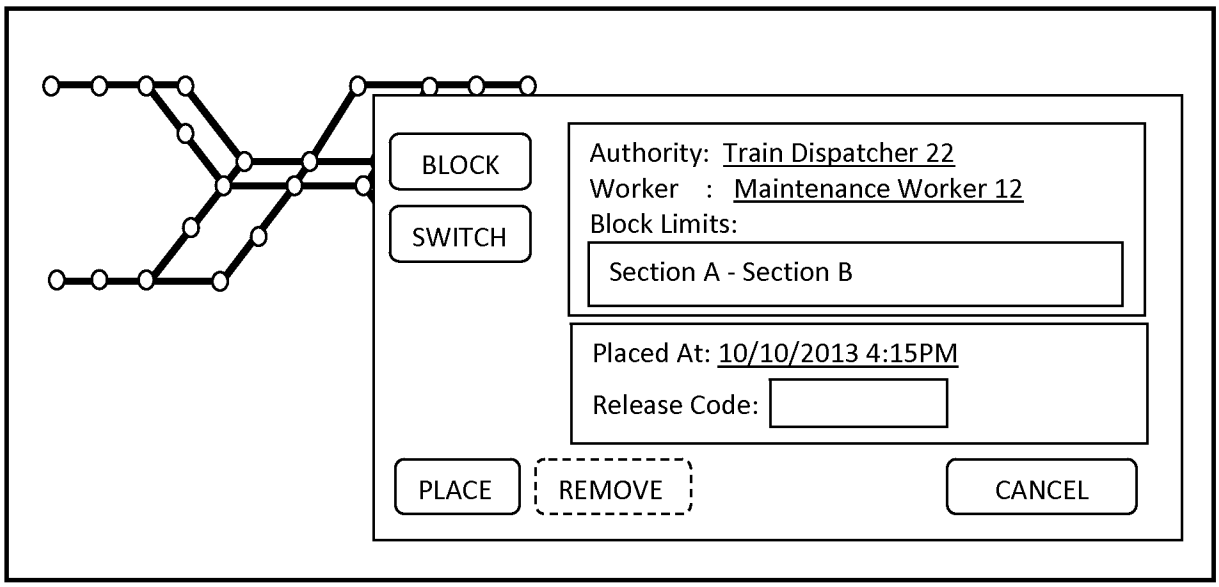

FIGURE 7

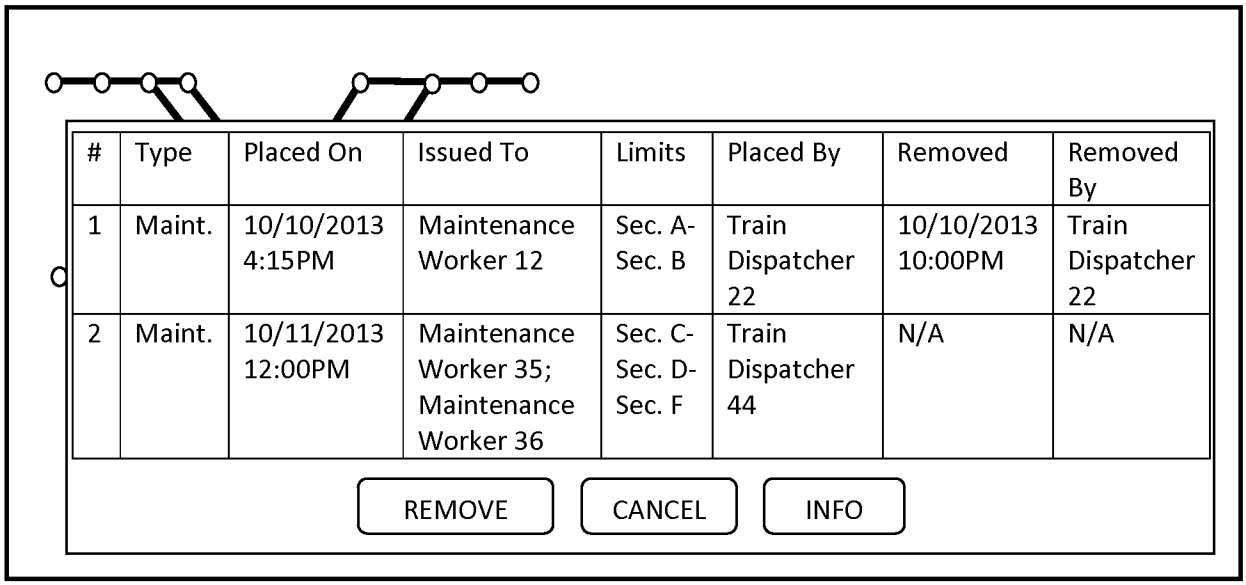

#	Type	Placed On	Issued To	Limits	Placed By	Removed	Removed By
1	Maint.	10/10/2013 4:15PM	Maintenance Worker 12	Sec. A-Sec. B	Train Dispatcher 22	10/10/2013 10:00PM	Train Dispatcher 22
2	Maint.	10/11/2013 12:00PM	Maintenance Worker 35; Maintenance Worker 36	Sec. C-Sec. D-Sec. F	Train Dispatcher 44	N/A	N/A

FIGURE 8

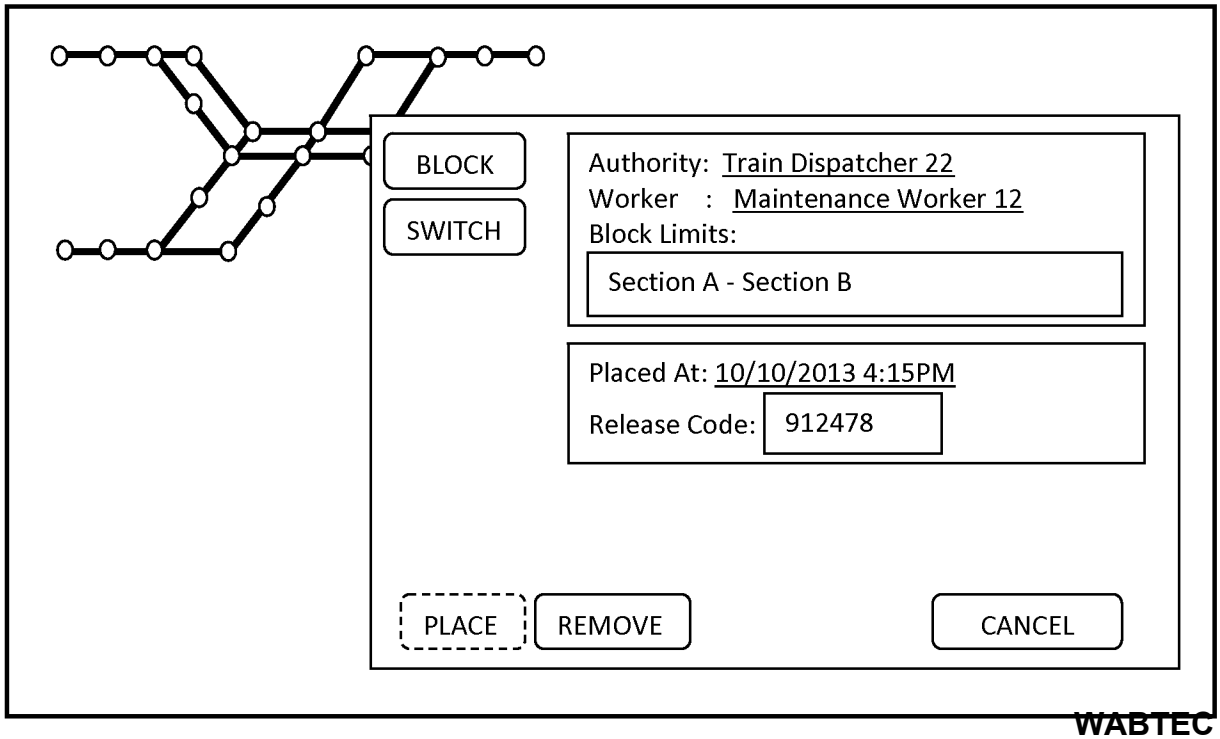

FIGURE 9

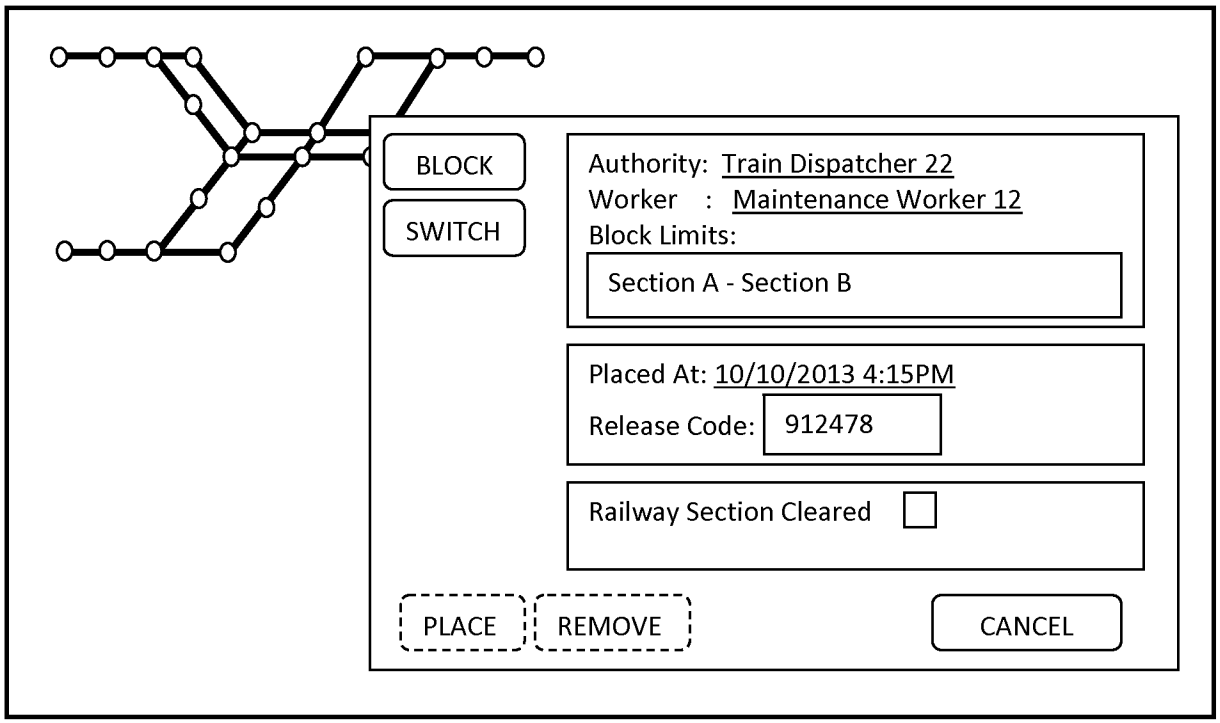

FIGURE 10

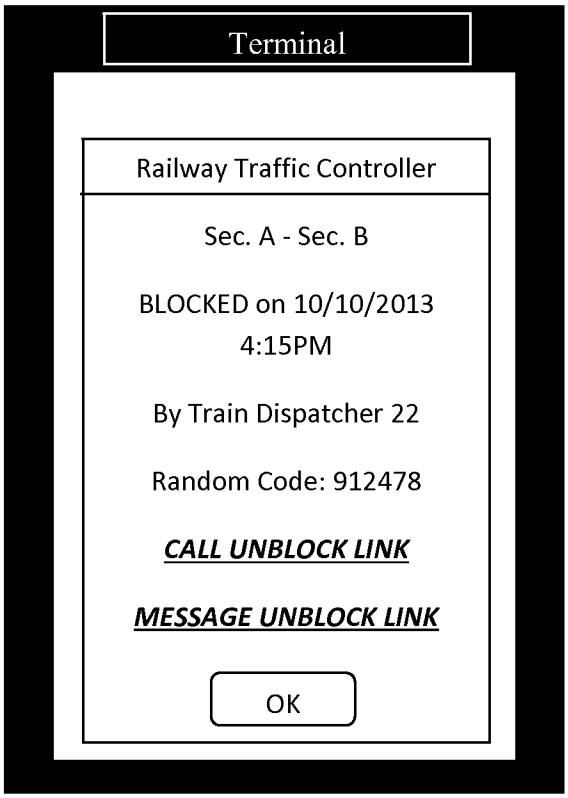

FIGURE 11

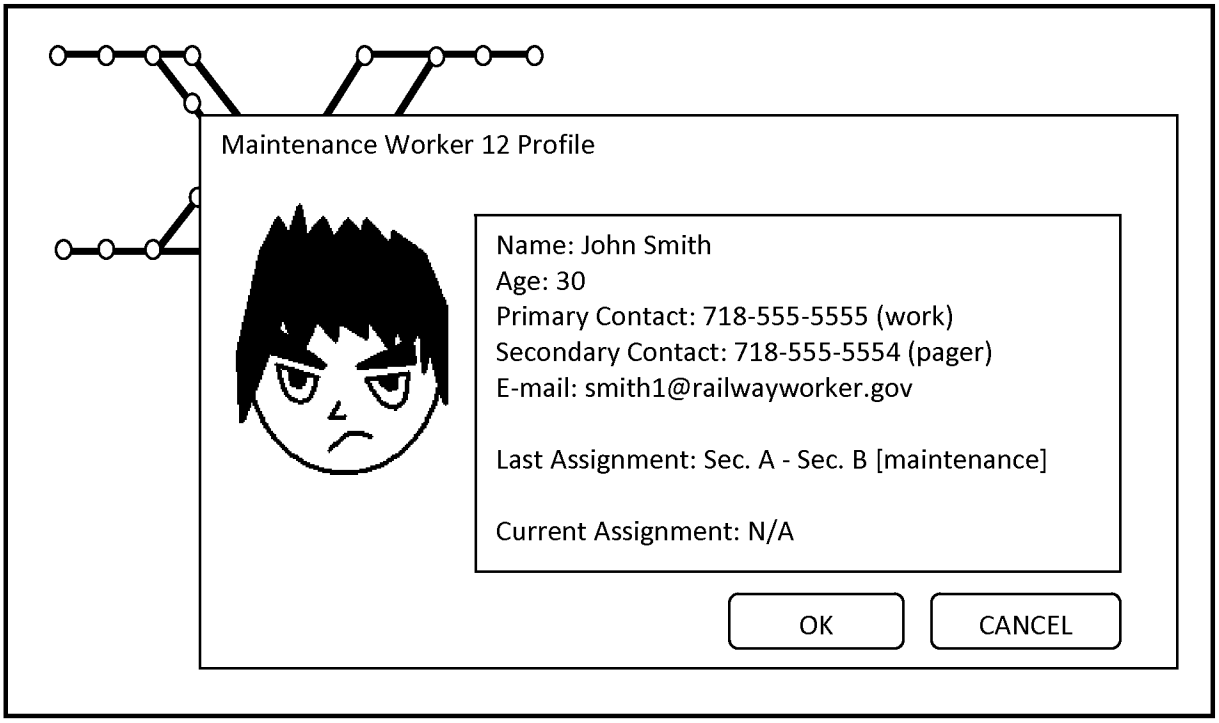
Maintenance Worker 12 Profile
Name: John Smith
Age: 30
Primary Contact: 718-555-5555 (work)
Secondary Contact: 718-555-5554 (pager)
E-mail: smith1@railwayworker.gov
Last Assignment: Sec. A - Sec. B [maintenance]
Current Assignment: N/A
OK
CANCEL

FIGURE 12

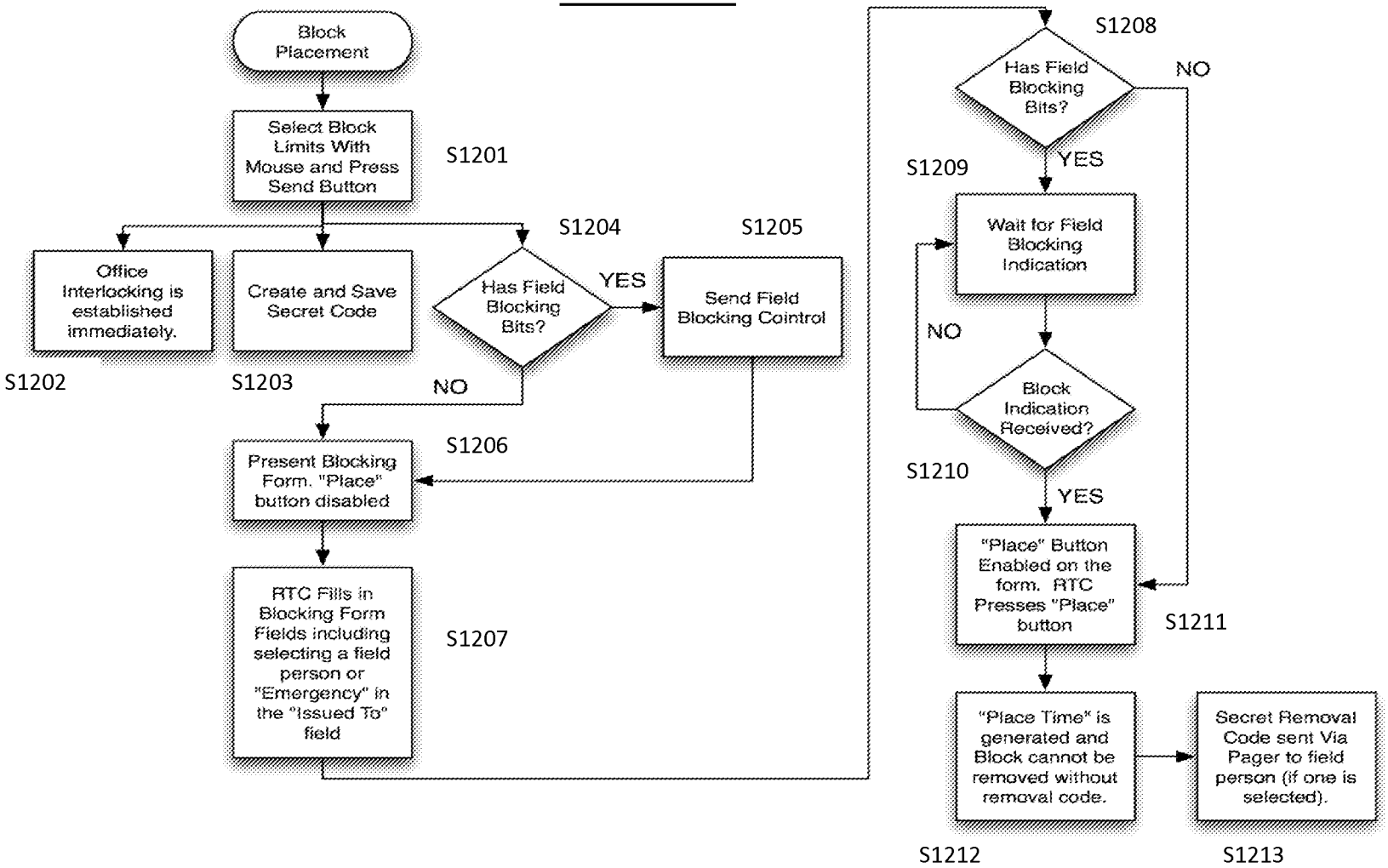
Block Placement
Select Block Limits With Mouse and Press Send Button
S1201
Office Interlocking is established immediately.
S1202
Create and Save Secret Code
S1203
Has Field Blocking Bits?
S1204
YES
NO
Send Field Blocking Cointrol
S1205
Present Blocking Form. "Place" button disabled
S1206
RTC Fills in Blocking Form Fields including selecting a field person or "Emergency" in the "Issued To" field
S1207
Has Field Blocking Bits?
S1208
NO
YES
Wait for Field Blocking Indication
S1209
NO
Block Indication Received?
S1210
YES
"Place" Button Enabled on the form. RTC Presses "Place" button
S1211
"Place Time" is generated and Block cannot be removed without removal code.
S1212
Secret Removal Code sent Via Pager to field person (if one is selected).
S1213

FIGURE 13

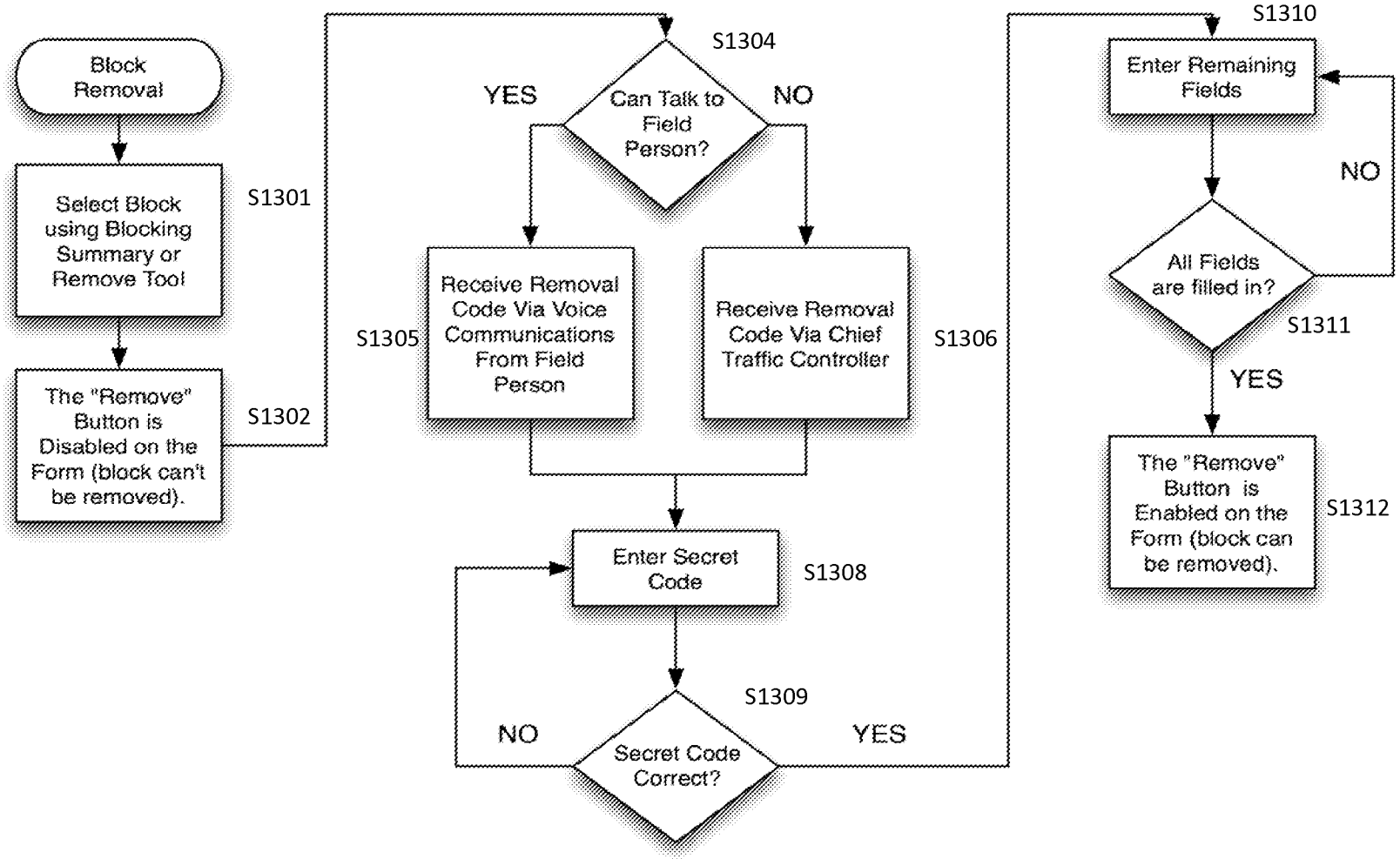
Block Removal
Select Block using Blocking Summary or Remove Tool
S1301
The "Remove" Button is Disabled on the Form (block can't be removed).
S1302
S1304
Can Talk to Field Person?
YES
NO
Receive Removal Code Via Voice Communications From Field Person
S1305
Receive Removal Code Via Chief Traffic Controller
S1306
Enter Secret Code
S1308
S1309
Secret Code Correct?
NO
YES
S1310
Enter Remaining Fields
All Fields are filled in?
NO
S1311
YES
The "Remove" Button is Enabled on the Form (block can be removed).
S1312

PTO/AIA/01 (06-12)
Approved for use through 01/31/2014. OMB 0651-0032
U.S. Patent and Trademark Office; U.S. DEPARTMENT OF COMMERCE
Under the Paperwork Reduction Act of 1995, no persons are required to respond to a collection of information unless it displays a valid OMB control number.

DECLARATION (37 CFR 1.63) FOR UTILITY OR DESIGN APPLICATION USING AN APPLICATION DATA SHEET (37 CFR 1.76)

Title of Invention	TOOLS FOR RAILWAY TRAFFIC CONTROL

As the below named inventor, I hereby declare that:

This declaration is directed to:

- [x] The attached application, or
- [ ] United States application or PCT international application number _____

  filed on _____.

The above-identified application was made or authorized to be made by me.

I believe that I am the original inventor or an original joint inventor of a claimed invention in the application.

I hereby acknowledge that any willful false statement made in this declaration is punishable under 18 U.S.C. 1001 by fine or imprisonment of not more than five (5) years, or both.

WARNING:

Petitioner/applicant is cautioned to avoid submitting personal information in documents filed in a patent application that may contribute to identity theft. Personal information such as social security numbers, bank account numbers, or credit card numbers (other than a check or credit card authorization form PTO-2038 submitted for payment purposes) is never required by the USPTO to support a petition or an application. If this type of personal information is included in documents submitted to the USPTO, petitioners/applicants should consider redacting such personal information from the documents before submitting them to the USPTO. Petitioner/applicant is advised that the record of a patent application is available to the public after publication of the application (unless a non-publication request in compliance with 37 CFR 1.213(a) is made in the application) or issuance of a patent. Furthermore, the record from an abandoned application may also be available to the public if the application is referenced in a published application or an issued patent (see 37 CFR 1.14). Checks and credit card authorization forms PTO-2038 submitted for payment purposes are not retained in the application file and therefore are not publicly available.

LEGAL NAME OF INVENTOR

Inventor: Ross Pirtle Date (Optional): 10/20/14

Signature: _____

Note: An application data sheet (PTO/AIA/14 or equivalent), including naming the entire inventive entity, must accompany this form. Use an additional PTO/SB/AIA01 form for each additional inventor.

This collection of information is required by 35 U.S.C. 115 and 37 CFR 1.63. The information is required to obtain or retain a benefit by the public which is to file (and by the USPTO to process) an application. Confidentiality is governed by 35 U.S.C. 122 and 37 CFR 1.11 and 1.14. This collection is estimated to take 1 minute to complete, including gathering, preparing, and submitting the completed application form to the USPTO. Time will vary depending upon the individual case. Any comments on the amount of time you require to complete this form and/or suggestions for reducing this burden, should be sent to the Chief Information Officer, U.S. Patent and Trademark Office, U.S. Department of Commerce, P.O. Box 1450, Alexandria, VA 22313-1450. DO NOT SEND FEES OR COMPLETED FORMS TO THIS ADDRESS. **SEND TO: Commissioner for Patents, P.O. Box 1450, Alexandria, VA 22313-1450.**

If you need assistance in completing the form, call 1-800-PTO-9199 and select option 2.

PTO/AIA/14 (12-13)
Approved for use through 01/31/2014. OMB 0651-0032
U.S. Patent and Trademark Office; U.S. DEPARTMENT OF COMMERCE
Under the Paperwork Reduction Act of 1995, no persons are required to respond to a collection of information unless it contains a valid OMB control number.

Application Data Sheet 37 CFR 1.76	Attorney Docket Number	7552/85663
	Application Number	
Title of Invention	TOOLS FOR RAILWAY TRAFFIC CONTROL	

The application data sheet is part of the provisional or nonprovisional application for which it is being submitted. The following form contains the bibliographic data arranged in a format specified by the United States Patent and Trademark Office as outlined in 37 CFR 1.76.
This document may be completed electronically and submitted to the Office in electronic format using the Electronic Filing System (EFS) or the document may be printed and included in a paper filed application.

Secrecy Order 37 CFR 5.2

☐ Portions or all of the application associated with this Application Data Sheet may fall under a Secrecy Order pursuant to 37 CFR 5.2 (Paper filers only. Applications that fall under Secrecy Order may not be filed electronically.)

Inventor Information:

Inventor 1 Remove

Legal Name

Prefix	Given Name	Middle Name	Family Name	Suffix
	Ross		Pirtle	

Residence Information (Select One) ◉ US Residency ◯ Non US Residency ◯ Active US Military Service

City	Commack	State/Province	NY	Country of Residence	US

Mailing Address of Inventor:

Address 1	RAILWARE, INC.		
Address 2	2110 Smithtown Avenue Suite 8		
City	Ronkonkoma	State/Province	NY
Postal Code	11779	Country i	US

All Inventors Must Be Listed - Additional Inventor Information blocks may be generated within this form by selecting the **Add** button. Add

Correspondence Information:

Enter either Customer Number or complete the Correspondence Information section below.
For further information see 37 CFR 1.33(a).

☐ **An Address is being provided for the correspondence Information of this application.**

Customer Number	23432		
Email Address		Add Email	Remove Email

Application Information:

Title of the Invention	TOOLS FOR RAILWAY TRAFFIC CONTROL		
Attorney Docket Number	7552/85663	Small Entity Status Claimed	☐
Application Type	Nonprovisional		
Subject Matter	Utility		
Total Number of Drawing Sheets (if any)	11	Suggested Figure for Publication (if any)	

Filing By Reference :

WABTEC EX1023

Under the Paperwork Reduction Act of 1995, no persons are required to respond to a collection of information unless it contains a valid OMB control number.

Application Data Sheet 37 CFR 1.76	Attorney Docket Number	7552/85663
	Application Number	
Title of Invention	TOOLS FOR RAILWAY TRAFFIC CONTROL	

Only complete this section when filing an application by reference under 35 U.S.C. 111(c) and 37 CFR 1.57(a). Do not complete this section if application papers including a specification and any drawings are being filed. Any domestic benefit or foreign priority information must be provided in the appropriate section(s) below (i.e., "Domestic Benefit/National Stage Information" and "Foreign Priority Information").

For the purposes of a filing date under 37 CFR 1.53(b), the description and any drawings of the present application are replaced by this reference to the previously filed application, subject to conditions and requirements of 37 CFR 1.57(a).

Application number of the previously filed application	Filing date (YYYY-MM-DD)	Intellectual Property Authority or Country

Publication Information:

☐ Request Early Publication (Fee required at time of Request 37 CFR 1.219)

☐ **Request Not to Publish.** I hereby request that the attached application not be published under 35 U.S.C. 122(b) and certify that the invention disclosed in the attached application **has not and will not** be the subject of an application filed in another country, or under a multilateral international agreement, that requires publication at eighteen months after filing.

Representative Information:

Representative information should be provided for all practitioners having a power of attorney in the application. Providing this information in the Application Data Sheet does not constitute a power of attorney in the application (see 37 CFR 1.32).
Either enter Customer Number or complete the Representative Name section below. If both sections are completed the customer Number will be used for the Representative Information during processing.

Please Select One:	◉ Customer Number	○ US Patent Practitioner	○ Limited Recognition (37 CFR 11.9)
Customer Number	23432		

Domestic Benefit/National Stage Information:

This section allows for the applicant to either claim benefit under 35 U.S.C. 119(e), 120, 121, or 365(c) or indicate National Stage entry from a PCT application. Providing this information in the application data sheet constitutes the specific reference required by 35 U.S.C. 119(e) or 120, and 37 CFR 1.78.
When referring to the current application, please leave the application number blank.

Prior Application Status	Pending		Remove
Application Number	Continuity Type	Prior Application Number	Filing Date (YYYY-MM-DD)
	Claims benefit of provisional	61893547	2013-10-21

Additional Domestic Benefit/National Stage Data may be generated within this form by selecting the **Add** button.

Foreign Priority Information:

WABTEC EX1023

Under the Paperwork Reduction Act of 1995, no persons are required to respond to a collection of information unless it contains a valid OMB control number.

Application Data Sheet 37 CFR 1.76	Attorney Docket Number	7552/85663
	Application Number	
Title of Invention	TOOLS FOR RAILWAY TRAFFIC CONTROL	

This section allows for the applicant to claim priority to a foreign application. Providing this information in the application data sheet constitutes the claim for priority as required by 35 U.S.C. 119(b) and 37 CFR 1.55(d). When priority is claimed to a foreign application that is eligible for retrieval under the priority document exchange program (PDX)[i] the information will be used by the Office to automatically attempt retrieval pursuant to 37 CFR 1.55(h)(1) and (2). Under the PDX program, applicant bears the ultimate responsibility for ensuring that a copy of the foreign application is received by the Office from the participating foreign intellectual property office, or a certified copy of the foreign priority application is filed, within the time period specified in 37 CFR 1.55(g)(1).

Remove

Application Number	Country[i]	Filing Date (YYYY-MM-DD)	Access Code[i] (if applicable)

Additional Foreign Priority Data may be generated within this form by selecting the **Add** button.

Statement under 37 CFR 1.55 or 1.78 for AIA (First Inventor to File) Transition Applications

☐ This application (1) claims priority to or the benefit of an application filed before March 16, 2013 and (2) also contains, or contained at any time, a claim to a claimed invention that has an effective filing date on or after March 16, 2013.
NOTE: By providing this statement under 37 CFR 1.55 or 1.78, this application, with a filing date on or after March 16, 2013, will be examined under the first inventor to file provisions of the AIA.

Authorization to Permit Access:

☐ Authorization to Permit Access to the Instant Application by the Participating Offices

WABTEC EX1023

Under the Paperwork Reduction Act of 1995, no persons are required to respond to a collection of information unless it contains a valid OMB control number.

Application Data Sheet 37 CFR 1.76	Attorney Docket Number	7552/85663
	Application Number	
Title of Invention	TOOLS FOR RAILWAY TRAFFIC CONTROL	

If checked, the undersigned hereby grants the USPTO authority to provide the European Patent Office (EPO), the Japan Patent Office (JPO), the Korean Intellectual Property Office (KIPO), the World Intellectual Property Office (WIPO), and any other intellectual property offices in which a foreign application claiming priority to the instant patent application is filed access to the instant patent application. See 37 CFR 1.14(c) and (h). This box should not be checked if the applicant does not wish the EPO, JPO, KIPO, WIPO, or other intellectual property office in which a foreign application claiming priority to the instant patent application is filed to have access to the instant patent application.

In accordance with 37 CFR 1.14(h)(3), access will be provided to a copy of the instant patent application with respect to: 1) the instant patent application-as-filed; 2) any foreign application to which the instant patent application claims priority under 35 U.S.C. 119(a)-(d) if a copy of the foreign application that satisfies the certified copy requirement of 37 CFR 1.55 has been filed in the instant patent application; and 3) any U.S. application-as-filed from which benefit is sought in the instant patent application.

In accordance with 37 CFR 1.14(c), access may be provided to information concerning the date o f filing this Authorization.

Applicant Information:

Providing assignment information in this section does not substitute for compliance with any requirement of part 3 of Title 37 of CFR to have an assignment recorded by the Office.

Applicant 1

If the applicant is the inventor (or the remaining joint inventor or inventors under 37 CFR 1.45), this section should not be completed. The information to be provided in this section is the name and address of the legal representative who is the applicant under 37 CFR 1.43; or the name and address of the assignee, person to whom the inventor is under an obligation to assign the invention, or person who otherwise shows sufficient proprietary interest in the matter who is the applicant under 37 CFR 1.46. If the applicant is an applicant under 37 CFR 1.46 (assignee, person to whom the inventor is obligated to assign, or person who otherwise shows sufficient proprietary interest) together with one or more joint inventors, then the joint inventor or inventors who are also the applicant should be identified in this section.

Clear

○ Assignee	○ Legal Representative under 35 U.S.C. 117	○ Joint Inventor
○ Person to whom the inventor is obligated to assign.	○ Person who shows sufficient proprietary interest	

If applicant is the legal representative, indicate the authority to file the patent application, the inventor is:

Name of the Deceased or Legally Incapacitated Inventor :

If the Applicant is an Organization check here. ☐

Prefix	Given Name	Middle Name	Family Name	Suffix

WABTEC EX1023

PTO/AIA/14 (12-13)
Approved for use through 01/31/2014. OMB 0651-0032
U.S. Patent and Trademark Office; U.S. DEPARTMENT OF COMMERCE
Under the Paperwork Reduction Act of 1995, no persons are required to respond to a collection of information unless it contains a valid OMB control number.

Application Data Sheet 37 CFR 1.76	Attorney Docket Number	7552/85663
	Application Number	
Title of Invention	TOOLS FOR RAILWAY TRAFFIC CONTROL	

Mailing Address Information For Applicant:			
Address 1			
Address 2			
City		**State/Province**	
Country i		Postal Code	
Phone Number		Fax Number	
Email Address			

Additional Applicant Data may be generated within this form by selecting the Add button.

Assignee Information including Non-Applicant Assignee Information:

Providing assignment information in this section does not subsitute for compliance with any requirement of part 3 of Title 37 of CFR to have an assignment recorded by the Office.

Assignee 1

Complete this section if assignee information, including non-applicant assignee information, is desired to be included on the patent application publication . An assignee-applicant identified in the "Applicant Information" section will appear on the patent application publication as an applicant. For an assignee-applicant, complete this section only if identification as an assignee is also desired on the patent application publication.

If the Assignee or Non-Applicant Assignee is an Organization check here. ☒

Organization Name	RAILWARE, INC.

Mailing Address Information For Assignee including Non-Applicant Assignee:			
Address 1	RAILWARE, INC.		
Address 2	2110 Smithtown Avenue Suite 8		
City	Ronkonkoma	**State/Province**	NY
Country i	US	Postal Code	11779
Phone Number		Fax Number	
Email Address			

Additional Assignee or Non-Applicant Assignee Data may be generated within this form by selecting the Add button.

Signature:

NOTE: This form must be signed in accordance with 37 CFR 1.33. See 37 CFR 1.4 for signature requirements and certifications.

Signature		Date (YYYY-MM-DD)	2014-10-21

WABTEC EX1023

PTO/AIA/14 (12-13)
Approved for use through 01/31/2014. OMB 0651-0032
U.S. Patent and Trademark Office; U.S. DEPARTMENT OF COMMERCE
Under the Paperwork Reduction Act of 1995, no persons are required to respond to a collection of information unless it contains a valid OMB control number.

Application Data Sheet 37 CFR 1.76	Attorney Docket Number	7552/85663
	Application Number	
Title of Invention	TOOLS FOR RAILWAY TRAFFIC CONTROL	

First Name	Paul	Last Name	Teng	Registration Number	40837
Additional Signature may be generated within this form by selecting the Add button.					

This collection of information is required by 37 CFR 1.76. The information is required to obtain or retain a benefit by the public which is to file (and by the USPTO to process) an application. Confidentiality is governed by 35 U.S.C. 122 and 37 CFR 1.14. This collection is estimated to take 23 minutes to complete, including gathering, preparing, and submitting the completed application data sheet form to the USPTO. Time will vary depending upon the individual case. Any comments on the amount of time you require to complete this form and/or suggestions for reducing this burden, should be sent to the Chief Information Officer, U.S. Patent and Trademark Office, U.S. Department of Commerce, P.O. Box 1450, Alexandria, VA 22313-1450. DO NOT SEND FEES OR COMPLETED FORMS TO THIS ADDRESS. **SEND TO: Commissioner for Patents, P.O. Box 1450, Alexandria, VA 22313-1450.**

WABTEC EX1023

PTO/AIA/82A (07-12)
Approved for use through 11/30/2014. OMB 0651-0035
U.S. Patent and Trademark Office; U.S. DEPARTMENT OF COMMERCE
Under the Paperwork Reduction Act of 1995, no persons are required to respond to a collection of information unless it displays a valid OMB control number.

TRANSMITTAL FOR POWER OF ATTORNEY TO ONE OR MORE REGISTERED PRACTITIONERS

NOTE: This form is to be submitted with the Power of Attorney by Applicant form (PTO/AIA/82B or equivalent) to identify the application to which the Power of Attorney is directed, in accordance with 37 CFR 1.5. If the Power of Attorney by Applicant form is not accompanied by this transmittal form or an equivalent, the Power of Attorney will not be recognized in the application.

Application Number	
Filing Date	
First Named Inventor	Ross PIRTLE
Title	TOOLS FOR RAILWAY TRAFFIC CONTROL
Art Unit	
Examiner Name	
Attorney Docket Number	7552/85663

SIGNATURE of Applicant or Patent Practitioner

Signature		Date	2014 OCT. 21
Name	Paul Teng	Telephone	(212) 278-0400
Registration Number	40,837		

NOTE: This form must be signed in accordance with 37 CFR 1.33. See 37 CFR 1.4(d) for signature requirements and certifications.

■ *Total of 1 forms are submitted.

This collection of information is required by 37 CFR 1.31, 1.32 and 1.33. The information is required to obtain or retain a benefit by the public which is to file (and by the USPTO to process) an application. Confidentiality is governed by 35 U.S.C. 122 and 37 CFR 1.11 and 1.14. This collection is estimated to take 3 minutes to complete, including gathering, preparing, and submitting the completed application form to the USPTO. Time will vary depending upon the individual case. Any comments on the amount of time you require to complete this form and/or suggestions for reducing this burden, should be sent to the Chief Information Officer, U.S. Patent and Trademark Office, U.S. Department of Commerce, P.O. Box 1450, Alexandria, VA 22313-1450. DO NOT SEND FEES OR COMPLETED FORMS TO THIS ADDRESS. **SEND TO: Commissioner for Patents, P.O. Box 1450, Alexandria, VA 22313-1450.**

If you need assistance in completing the form, call 1-800-PTO-9199 and select option 2.

PTO/AIA/82B(07-12)
Approved for use through 11/30/2014. OMB 0651-0035
U.S. Patent and Trademark Office; U.S. DEPARTMENT OF COMMERCE
Under the Paperwork Reduction Act of 1995, no persons are required to respond to a collection of information unless it displays a valid OMB control number.

POWER OF ATTORNEY BY APPLICANT

I hereby revoke all previous powers of attorney given in the application identified in the attached transmittal letter.

[x] I hereby appoint Practitioner(s) associated with the following Customer Number as my/our attorney(s) or agent(s), and to transact all business in the United States Patent and Trademark Office connected therewith for the application referenced in the attached transmittal letter (form PTO/AIA/82A or equivalent):

23432

OR

[ ] I hereby appoint Practitioner(s) named below as my/our attorney(s) or agent(s), and to transact all business in the United States Patent and Trademark Office connected therewith for the application referenced in the attached transmittal letter (form PTO/AIA/82A or equivalent):

Name	Registration Number	Name	Registration Number

Please recognize or change the correspondence address for the application identified in the attached transmittal letter to:

[x] The address associated with the above-mentioned Customer Number.

OR

[ ] The address associated with Customer Number:

OR

[ ] Firm or Individual Name					
Address					
City		State		Zip	
Country					
Telephone		Email			

I am the Applicant:

[x] Inventor or Joint Inventor

[ ] Legal Representative of a Deceased or Legally Incapacitated Inventor

[ ] Assignee or Person to Whom the Inventor is Under an Obligation to Assign

[ ] Person Who Otherwise Shows Sufficient Proprietary Interest (*e.g.*, a petition under 37 CFR 1.46(b)(2) was granted in the application or is concurrently being filed with this document)

SIGNATURE of Applicant for Patent

Signature		Date	10/20/14
Name	Ross Pirtle	Telephone	631-285-7245
Title and Company	President/CEO Ballore Inc.		

NOTE: Signature - This form must be signed by the applicant in accordance with 37 CFR 1.33. See 37 CFR 1.4 for signature requirements and certifications. Submit multiple forms for more than one signature, see below *.

[x] *Total of 1 forms are submitted.

This collection of information is required by 37 CFR 1.31, 1.32 and 1.33. The information is required to obtain or retain a benefit by the public which is to file (and by the USPTO to process) an application. Confidentiality is governed by 35 U.S.C. 122 and 37 CFR 1.11 and 1.14. This collection is estimated to take 3 minutes to complete, including gathering, preparing, and submitting the completed application form to the USPTO. Time will vary depending upon the individual case. Any comments on the amount of time you require to complete this form and/or suggestions for reducing this burden, should be sent to the Chief Information Officer, U.S. Patent and Trademark Office, U.S. Department of Commerce, P.O. Box 1450, Alexandria, VA 22313-1450. DO NOT SEND FEES OR COMPLETED FORMS TO THIS ADDRESS. SEND TO: **Commissioner for Patents, P.O. Box 1450, Alexandria, VA 22313-1450.**

If you need assistance in completing the form, call 1-800-PTO-9199 and select option 2.

Electronic Patent Application Fee Transmittal

Application Number:	
Filing Date:	
Title of Invention:	TOOLS FOR RAILWAY TRAFFIC CONTROL
First Named Inventor/Applicant Name:	Ross Pirtle
Filer:	Paul Teng/Smith Piyanan
Attorney Docket Number:	7552/85663

Filed as Large Entity

Utility under 35 USC 111(a) Filing Fees

Description	Fee Code	Quantity	Amount	Sub-Total in USD($)
Basic Filing:				
Utility application filing	1011	1	280	280
Utility Search Fee	1111	1	600	600
Utility Examination Fee	1311	1	720	720
Pages:				
Claims:				
Miscellaneous-Filing:				
Petition:				
Patent-Appeals-and-Interference:				

WABTEC EX1023

Description	Fee Code	Quantity	Amount	Sub-Total in USD($)
Post-Allowance-and-Post-Issuance:				
Extension-of-Time:				
Miscellaneous:				
			Total in USD ($)	**1600**

Electronic Acknowledgement Receipt

EFS ID:	20475045
Application Number:	14519727
International Application Number:	
Confirmation Number:	7580
Title of Invention:	TOOLS FOR RAILWAY TRAFFIC CONTROL
First Named Inventor/Applicant Name:	Ross Pirtle
Customer Number:	23432
Filer:	Paul Teng/Smith Piyanan
Filer Authorized By:	Paul Teng
Attorney Docket Number:	7552/85663
Receipt Date:	21-OCT-2014
Filing Date:	
Time Stamp:	15:36:27
Application Type:	Utility under 35 USC 111(a)

Payment information:

Submitted with Payment	yes
Payment Type	Deposit Account
Payment was successfully received in RAM	$1600
RAM confirmation Number	1992
Deposit Account	033125
Authorized User	

File Listing:

Document Number	Document Description	File Name	File Size(Bytes)/ Message Digest	Multi Part /.zip	Pages (if appl.)

WABTEC EX1023

1	Transmittal of New Application	85663--ApplicationTransmittal.pdf	133418 eac383eda101f9e88b7de0ad404e11500f181584	no	3
Warnings:					
Information:					
2		85663--SpecificationClaimsAbstract.pdf	68826 a6f1d8439d45c5e4be22c85d62761088b217bbd8	yes	42

	Multipart Description/PDF files in .zip description		
	Document Description	**Start**	**End**
	Specification	1	31
	Claims	32	41
	Abstract	42	42

Warnings:					
Information:					
3	Drawings-only black and white line drawings	85663--Drawings.pdf	536610 8aeabe3bc0b09ae5ee11b5d04323c9e0740bd75e	no	11
Warnings:					
Information:					
4	Oath or Declaration filed	85663--InventorsDeclaration.pdf	1403526 a0fef0afa16d5af9ca4007e71d632785ca7deb61	no	1
Warnings:					
Information:					
5	Application Data Sheet	85663--ApplicationDataSheet.pdf	448304 d653fd1b860fec0d2d9edfe4beaa5260342833f7	no	6
Warnings:					
Information:					
This is not an USPTO supplied ADS fillable form					
6	Power of Attorney	85663--Power_of_Attorney.pdf	193866 90d3692c2b12ef99cdc82ef0bdf1eed1d19c5eb0	no	2
Warnings:					
Information:					
7	Fee Worksheet (SB06)	fee-info.pdf	32598 d97c131216c58013ba2a087863b8ef5db6bdd228	no	2
Warnings:					
Information:					

WABTEC EX1023

Total Files Size (in bytes):	2817148

This Acknowledgement Receipt evidences receipt on the noted date by the USPTO of the indicated documents, characterized by the applicant, and including page counts, where applicable. It serves as evidence of receipt similar to a Post Card, as described in MPEP 503.

New Applications Under 35 U.S.C. 111
If a new application is being filed and the application includes the necessary components for a filing date (see 37 CFR 1.53(b)-(d) and MPEP 506), a Filing Receipt (37 CFR 1.54) will be issued in due course and the date shown on this Acknowledgement Receipt will establish the filing date of the application.

National Stage of an International Application under 35 U.S.C. 371
If a timely submission to enter the national stage of an international application is compliant with the conditions of 35 U.S.C. 371 and other applicable requirements a Form PCT/DO/EO/903 indicating acceptance of the application as a national stage submission under 35 U.S.C. 371 will be issued in addition to the Filing Receipt, in due course.

New International Application Filed with the USPTO as a Receiving Office
If a new international application is being filed and the international application includes the necessary components for an international filing date (see PCT Article 11 and MPEP 1810), a Notification of the International Application Number and of the International Filing Date (Form PCT/RO/105) will be issued in due course, subject to prescriptions concerning national security, and the date shown on this Acknowledgement Receipt will establish the international filing date of the application.

Dkt. 7552/85663

IN THE UNITED STATES PATENT AND TRADEMARK OFFICE

Application of: Ross PIRTLE

Application No.: 14/519,727

Filing Date: October 21, 2014

For: TOOLS FOR RAILWAY TRAFFIC CONTROL

Confirmation No.: 7580

This correspondence is being filed electronically with the U.S. Patent and Trademark Office via EFS-Web.

Smith Piyanan October 22, 2014
Smith Piyanan Date

30 Rockefeller Center, 20th Floor
New York, New York 10112
Tel.: (212) 278-0400

Commissioner for Patents
P.O. Box 1450
Alexandria, VA 22313-1450

INFORMATION DISCLOSURE STATEMENT

Sir:

In order to ensure compliance with the applicant's duty of disclosure under 37 C.F.R. §1.56 and §1.97(a)-(d), Applicant hereby submits this Information Disclosure Statement.

This Information Disclosure Statement is being filed pursuant to 37 C.F.R. § 1.97(b)(1), within three months after the October 21, 2014 filing date of this application.

It is respectfully requested that the information cited in the annexed Form PTO-1449 be considered by the Examiner in connection with the above-identified patent application, and that such art be made of record in said application.

Pursuant to 37 C.F.R. §1.98, copies are submitted herewith for only references listed on the annexed Form PTO-1449 that are not a U.S. patent or U.S. patent application publication.

The Patent Office is hereby authorized to charge any fees that are required for consideration of this Information Disclosure Statement, and to credit any overpayment, to our

Deposit Account No. 03-3125.

Respectfully submitted,

PAUL TENG, Reg. No. 40,837
Attorney for Applicant
COOPER & DUNHAM LLP
30 Rockefeller Center, 20th Floor
New York, New York 10112
Tel. (212) 278-0400

Submitted by: _____
Paul Teng, Reg. No. 40,837

Form PTO-1449	U.S. Department of Commerce Patent and Trademark Office	Application No. 14/519,727	Filing Date October 21, 2014
INFORMATION DISCLOSURE STATEMENT BY APPLICANT (Use as many sheets as necessary)		First Named Inventor: Ross PIRTLE	
		Art Unit:	
		Examiner Name:	
		Atty. Docket No.: 7552/85663	

U.S. PATENT DOCUMENTS

Examiner Initials*	Cite No.	Document Number (Number-Kind Code (if known))	Publication Date MM-DD-YYYY	Name of Patentee or Applicant of Cited Document	Relevant Pages, Lines, etc.
		5 3 9 0 8 8 0	02-21-1995	Fukawa et al.	
		5 9 2 4 6 5 3	07-20-1999	Pederson et al.	
		20 07 /0 05 57 43 A1	03-08-2007	Pirtle et al.	
		20 07 /0 17 60 54 A1	08-02-2007	Mally	
		20 11 /0 03 76 19 A1	02-17-2011	Ginsberg et al.	
		20 11 /0 23 82 42 A1	09-29-2011	NICHTER	
		20 11 /0 31 35 96 A1	12-22-2011	Ecton et al.	
		20 13 /0 13 51 09 A1	05-30-2013	Sharon	
		8 4 7 8 4 6 3	07-02-2013	Knott et al.	
		20 13 /0 16 85 03 A1	07-04-2013	Cooper et al.	
		20 13 /0 18 70 10 A1	07-25-2013	KIM	
		20 13 /0 20 13 16 A1	08-08-2013	BINDER et al.	
		20 13 /0 23 47 74 A1	09-12-2013	Huang	

FOREIGN PATENT DOCUMENTS

Examiner Initials*	Cite No.	Foreign Patent Document (Country Code, Number, Kind Code (if known))	Publication Date MM-DD-YYYY	Name of Patentee or Applicant of Cited Document	Relevant Pages, Lines, etc.	Translation
		EP 1 0 8 3 6 3	05-16-1984	Kawasaki Jukogyo Kabushiki Kaisha		

NON PATENT LITERATURE DOCUMENTS

Examiner Initials*	Cite No.	Include name of the author (in CAPITAL LETTERS), title of the article, title of the item (book, magazine, symposium, etc.), date, page(s), volume-issue number(s), publisher, city and/or country where published.
		J.B. CALVERT, "Centralized Traffic Control", May 29, 1999
		FRANK W. BRYAN, "Railroad's traffic control systems", May 1, 2006

EXAMINER	DATE CONSIDERED

***EXAMINER:** Initial if citation considered, whether or not citation is in conformance with MPEP 609: Draw line through citation if not in conformance and not considered. Include copy of this form with next communication to applicant.

Submitted by: _____
Paul Teng, Reg. No. 40,837

Form PTO-1449	U.S. Department of Commerce Patent and Trademark Office	Application No. 14/519,727	Filing Date October 21, 2014
INFORMATION DISCLOSURE STATEMENT BY APPLICANT (Use as many sheets as necessary)		First Named Inventor: Ross PIRTLE	
		Art Unit:	
		Examiner Name:	
		Atty. Docket No.: 7552/85663	

U.S. PATENT DOCUMENTS

Examiner Initials*	Cite No.	Document Number Number-Kind Code (if known)	Publication Date MM-DD-YYYY	Name of Patentee or Applicant of Cited Document	Relevant Pages, Lines, etc.

FOREIGN PATENT DOCUMENTS

Examiner Initials*	Cite No.	Foreign Patent Document Country Code, Number, Kind Code (if known)	Publication Date MM-DD-YYYY	Name of Patentee or Applicant of Cited Document	Relevant Pages, Lines, etc.	Translation

NON PATENT LITERATURE DOCUMENTS

Examiner Initials*	Cite No.	Include name of the author (in CAPITAL LETTERS), title of the article, title of the item (book, magazine, symposium, etc.), date, page(s), volume-issue number(s), publisher, city and/or country where published.
		KYLE MCINNES, "BlackBerry-Based WIC Pager Pilot Program at Children's Hospital", July 21, 2010
		JAI C.S., "Healthcare Communication Interface: WIC Pager, Philips Emergin", October 8, 2010
		"Fatal Accidents Involving Roadway Workers-In-Charge and Lone Workers", March 9, 2012, Fatality Analysis of Maintenance-of-way Employees and Signalmen (FAMES) Committee
		"Introduction to the FAMES Committee", May 21, 2012, Fatality Analysis of Maintenance-of-way Employees and Signalmen (FAMES) Committee
		CASEYJONZ et al., "Centralized traffic control", July 13, 2013, Wikipedia
		AARON-TRIPEL et al., "Train dispatcher", August 23, 2013, Wikipedia
		MASAKI KATAHIRA et al., "Recent Train Traffic Control Systems", Hitachi, Ltd.
		"SCC Centralized traffic control system for lines and area junctions", Ansaldo STS

EXAMINER	DATE CONSIDERED

***EXAMINER:** Initial if citation considered, whether or not citation is in conformance with MPEP 609: Draw line through citation if not in conformance and not considered. Include copy of this form with next communication to applicant.

(19) Europäisches Patentamt
European Patent Office
Office européen des brevets

(11) Publication number: 0 108 363
A2

(12) # EUROPEAN PATENT APPLICATION

(21) Application number: 83110839.4

(22) Date of filing: 28.10.83

(51) Int. Cl.³: B 61 L 27/00

(30) Priority: 02.11.82 JP 193231/82

(43) Date of publication of application: 16.05.84 Bulletin 84/20

(84) Designated Contracting States: DE FR GB

(71) Applicant: Kawasaki Jukogyo Kabushiki Kaisha
1-1 Higashikawasaki-cho 3-chome
Chuo-ku Kobe-shi Hyogo-ken(JP)

(72) Inventor: Miki, Hiromu
4-8, Takaoka-1-chome
Ohkubocho, Akashi-shi(JP)

(72) Inventor: Tomizawa, Yukio
425-22, Wada, Inamicho
Kako-gun, Hyogo-ken(JP)

(74) Representative: Strehl, Peter et al,
Dipl.-Ing. P. Strehl Dr. U. Schübel-Hopf Dr. R. Schulz
Patentanwälte Widenmayerstrasse 17 Postfach 22 03 45
D-8000 München 22(DE)

(54) **Method and apparatus for administration and control of train service.**

(57) Transmitter and receiver units (28, ..., 31, 32 ..., 35) each connected to corresponding one of a plurality of sections (37 ..., 42; 43 ..., 48) of an information transmission line (36), information transmission units (24, 25; 26, 27), control-processing unit (22; 23) and a single administration-processing unit (21) are arranged to form a hierarchy structure. The administration-processing unit (21) monitors the operation of the whole system and supplies to the control-processing units (22; 23) information relating to a train service schedule of a group of trains, a modified train service schedule to meet a change in demand, etc., and the control-processing units (22; 23) performs the traffic control of each train.

EP 0 108 363 A2

./...

Croydon Printing Company Ltd.

WABTEC EX1023

FIG. 3

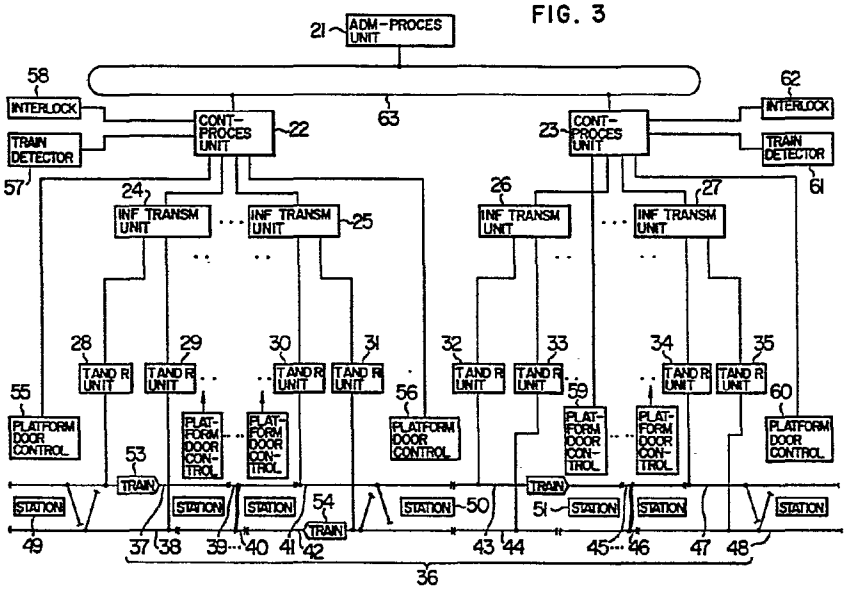

WABTEC EX1023

METHOD AND APPARATUS FOR ADMINISTRATION AND CONTROL OF TRAIN SERVICE

This invention relates to a method and apparatus for administration and control of train service.

Prior art train service administration and control systems which can attain unmanned train operation are broadly classified into a so-called centralized control type and a so-called decentralized control type. The prior art system of the centralized control type is shown in FIG. 1. Referring to FIG. 1, an information transmission line 6 extending along the entire length of the track (not shown) laid for running of trains 7A to 7X (of which only two, 7A and 7X, are shown) is divided nto a plurality of sections 6A, 6B, 6C, 6D, ..., 6K, 6L, 6M and 6N (some of which are not shown). Transmitter and receiver units 5A, 5B, ..., 5M and 5N are respectively connected to the individual sections 6A, 6B, .., 6M and 6N of the information transmission line 6. (The transmitter and receiver units 5C to 5L corresponding to the sections 6C to 6L respectively are not shown to avoid confusion of illustration.) A single or a plurality of information transmission units 4 are connected to all of the transmitter and receiver units 5A, 5B, ..., 5M and 5N to transmit and receive information required for the control of the operation of the trains 7A to 7X existing within the extent of the sections 6A to 6N of the information transmission line 6. (In FIG. 1,

WABTEC EX1023

a single information transmission unit 4 is shown.) Connected to the information transmission unit 4 is a train service administration and control unit 1 to exchanging information with the information transmission unit 4. Connected to the train service administration and control unit 1 are platform door control units 10A to 10Z controlling opening and closure of doors disposed at the platform of stations 8A to 8Z. Connected also to the train service administration and control unit 1 are a train detection unit 11 and an interlocking operation unit 12. Both of the train service administration and control unit 1 and the information transmission unit 4 are collectively installed in a central control center. The train service administration and control unit 1 functions to prepare the train service schedule, administrate the group of the trains and control the operation of the individual trains.

According to such a train service administration and control system of the centralized control type, the structure of its control system can be simplified, and all of necessary information can be collected in the train service administration and control unit 1. Therefore, this sytem has such an advantage that the operators can acquire all the information of the whole system and can readily intervene or interrupt in the control as required. This sytem has such another advantage that the installation of the important parts of the system in the central control center facilitates maintenance of those

parts. However, the prior art system of the centralized control type has such a disadvantage that, in the event of occurrence of an accident, the load attributable to the accident is added to the normal load of the train service administration and control unit 1, and the response speed for processing is inevitably reduced due to the concentration of the loads to be processed. Further, the prior art system of the centralized control type has such another disadvantage that the expansion of the system to deal with an extension of the train track is difficult since the load to be processed by the unit 1 is generally proportional to the length of the track or the frequency of train service.

The prior art train service administration and control system of the decentralized control type is shown in FIG. 2. In FIG. 2, the same reference numerals are used to designate the same or equivalent parts appearing in FIG. 1. In the system of the distributed control type , station control units 9A to 9Z are disposed for the individual stations 8A to 8Z respectively. All of these station control units 9A to 9Z are connected to the train service administration and control unit 1. Connected to the station control units 9A to 9Z are the platform door control units 10A to 10Z, interlocking operation units 12A to 12Z and station information transmission lines 13A to 13Z respectively. Information of a train or trains stopped at the station or stations and information of the individual stations are exchanged between the train

service administration and control unit 1 and the station control units 9A to 9Z. The train service administration and control 1 monitors generally the status of the individual trains 7A to 7X and applies to the station control units 9A to 9Z, the train control information for controlling the trains according to a predermined schedule of train service. The station control units 9A to 9Z control the operation of the trains 7A to 7X according to a predetermined sequence and timing. While the trains 7A to 7X are running, the train service administration and control unit 1 monitors the status of the trains on the basis of information applied through the information transmission unit 4 and transmits the control command through the information transmission unit 4.

The system of the decentralized control type has such an advantage that the load processed by the train service administration and control 1 can be distributed to improve the response speed for processing. However, due to the fact that the component units of the system are widely distributed, the maintenance of the distributed units is not easy, and the necessity for providing two systems of the train information transmission line 6 and station information transmission lines 13, leads to an increase in the cost. Further, when any one of the station control units 9A to 9Z is disabled, the function of the disabled one of the station control units 9A to 9Z cannot be substituted by the train service administration and control unit 1 disposed in the central control

WABTEC EX1023

center and since the trouble cannot be dealt with by intervention from the central control center, an operator must be dispatched to the associated stations 8A to 8Z for which the station control units 9A to 9Z are provided respectively. The prior art system of the distributed control type is therefore defective in that the unmanning of the stations cannot be realized in such an event.

With a view to solve the technical problems encountered by the prior art systems described above, it is a primary object of the present invention to provide a method and apparatus for administration and control of train service, which increases the response speed for processing, facilitates an expansion of the system to deal with an extension of the train track and yet permits easy maintenance of the system.

The present invention provides a method and apparatus for train service administration and control including means for exchanging information including status information indicative of the operating status of each of a plurality of trains running on the track and command information controlling the operation of the train, through an information transmission line divided into a plurality of sections of a predetermined length extending along the entire length of the track thereby controlling the train operation according to a train service schedule, the apparatus comprising a plurality of transmitter and receiver units connected individually to the sections of the information transmission line,

at least one information transmission unit installed in a central control center to be connected to at least one of the transmitter and receiver units, at least one control-processing unit installed in the central control center to be connected to the information transmission unit, and a single administration and control unit installed in the central control center to be connected to the control-processing unit, all of the units being disposed in a hierarchy in the above order, so that the distribution of processing functions to the administration-processing unit and control-processing unit can improve the response speed of these processing units.

The present invention differs from the prior art system of the centralized control type in that the train service administration-processing unit is divided into a single administration-processing unit and a plurality of control-processing units constituting a hierarchy structure, and the tasks of the processing for administration and the processing for control are respectively allocated to respective stages of the hierarchy thereby improving the response speed for processing. The present invention differs also from the prior art system of the distributed control type in that all of information are collected in a central control center for conveniences of the operators, and simplification of the structure of the system and improvement in the maintenance are further achieved.

Preferred embodiments of the present invention

WABTEC EX1023

will now be described in detail with reference to the drawings.

FIGs. 1 and 2 are block diagrams illustrating the prior art train service administration and control systems.

FIG. 3 is a block diagram of a preferred embodiment of the present invention.

FIG. 4 is a block diagram showing the detailed structure of the control-processing unit 22 shown in FIG. 3.

FIG. 5 is a block diagram of another preferred embodiment of the present invention.

Referring to FIG. 3 which is a block diagram of a preferred embodiment of the present invention, the train service administration and control system according to the present invention comprises an administration-processing unit 21, a plurality of or, for example, two control-processing units 22 and 23, a plurality of information transmission units 24, ..., 25 and 26, ..., 27 (some of which are not shown), and a plurality of transmitter and receiver units 28, 29, ..., 30, 31, 32, 33, ..., 34 and 35 (some of which are not shown). The administration-processing unit 21 and the control-processing units 22, 23; the control-processing units 22, 23 and the information transmission units 24 to 27; and the information transmission units 24 to 27 and the transmitter and receiver units 28 to 35 are disposed in a hierarchy as shown.

An information transmission line 36 extends along the entire length of the track laid for running of trains (of which only two, 53 and 54, are shown). This information transmission line 36 is divided into a plurality of sections 37, 38, 39, ..., 40, 41, 42, 43, 44, 45, ..., 46, 47 and 48 (some of which are not shown in FIG. 3). The sections 37 to 42 of the information transmission line 36 are those disposed along a section of track which was constructed in the first stage of the tranck construction work, while the sections 43 to 48 of the information transmission line 36 are those disposed along an extended track section which was constructed in the second stage of the track construction work carried out to extend the track. Stations 49, ..., 50 are those provided in the first stage of the track construction work, while stations 51, ..., 52 are those provided in the second stage of the track construction work. The transmitter and receiver units 28 to 35 are disposed in a relation individually corresponding to the sections 37 to 48 respectively of the information transmission line 36. (The transmitter and receiver units corresponding to the sections 39, ..., 40 and 45, ..., 46 of the information transmission line 36 are not shown.) These transmitter and receiver units 28 to 35 are installed in the individual stations nearest thereto or two or more of them are collectively installed in each of the key stations of a plurality of stations.

The transmitter and receiver units 28 to 35

are divided into a plurality of groups (some of which are not shown), and the information transmission units 24 to 27 are disposed in a relation corresponding individually to the groups of the transmitter and receiver units 28 to 35. In FIG. 3, the transmitter and receiver units 28 and 29 are connected to the information transmission unit 24, and the transmitter and receiver units 30 and 31 are connected to the information transmission unit 25. The transmitter and receiver units 32 and 33 are connected to the information transmission unit 26, and the transmitter and receiver units 34 and 35 are connected to the information transmission unit 27.

The information transmission units 24 to 27 are divided into a plurality of groups, for example, two groups as shown, and the control-processing units 22 and 23, which may be composed of computers, are disposed in a relation individually corresponding to the groups of the information transmission units 24 to 27. The information transmission units 24 to 25 are connected to the control-processing unit 22, and the information transmission units 26 to 27 are connected to the control-processing unit 23.

Connected also to the control-processing unit 22 are platform door control units 55 to 56 controlling the opening and closure of doors disposed at the platform of the stations in relation to the opening and closure of the doors of the trains 53 to 54 running along the corresponding sections of the track, a train detection

unit 57 detecting the position of the trains 53 to 54, and an interlocking operation unit 58 controlling the route of advancing movement of the trains 53 to 54 and indicating the advancing route status. Connected also to the control-processing unit 23 are platform door control units 59 to 60 similar to the platform door control units 55 to 56, a train detection unit 61 similar to the train detection unit 57, and an interlocking operation unit 62 similar to interlocking operation unit 58.

The control-processing units 22 and 23 are connected to each other and to an administration-processing unit 21, which may be also composed of a computer, through an exclusive circuit 63 which is in the form of , for example, an optical fiber cable or a coaxial cable. The administration-processing unit 21, control-processing unit 22 and information transmission units 24 to 25 are collectively installed in a central control center. The control-processing unit 23 and information transmission units 26 to 27 are collectively installed in a sub-control center. The central control center and sub-control center may be located in the same place or separate places.

The administration-processing unit 21, which is of the high echelon in the hierarchy arrangement, exchanges information with the control-processing units 22 and 23 of the lower echelon through the exclusive circuit 63, to carry out processing for the purpose of administration. The administration-processing unit 21

supplied to the control-processing units 22 and 23 the information including the train service schedule prepared for the group of the trains 53 to 54, modified schedule required to deal with, for example, a change of the transportation demand and occurrence of an accident, and intervening or interrupt information for inhibiting departure of or emergency stopping of a train or trains. The administration-processing unit 21 functions also to monitor the status of the train service administration and control system.

The control-processing unit 22 receives train status information from the sections 37 to 42 of the information transmission line 36 through the transmitter and receiver units 28 to 31 and information transmission units 24 to 25. The control-processing unit 22 receives also platform door status information from the platform door control units 55 to 56, trains position information from the train detection unit 57 and train advancing route status information from the interlocking operation unit 58. In response to the train service schedule information and interrupt information supplied from the administration-processing unit 21, the control-processing unit 22 generates train control command information, platform door control command information and route setting command information with appropriate timing on the basis of the train status information, platform door status information, train position information and train advancing route status information applied thereto.

WABTEC EX1023

FIG. 4 is a block diagram showing the detailed structure of the control-processing unit 22 shown in FIG. 3. Referring to FIG. 4, the control-processing unit 22 includes a timer 70, a plurality of memory parts 71, 72, 73, 74, 75 and 76, a plurality of selector parts 77, 78 and 79, a plurality of output parts 80, 81 and 82, and a plurality of checking parts 83, 84 and 85.

The timer 70 performs time keeping operation. The first memory part 71 stores the train operation schedule information supplied from the administration-processing unit 21. The second memory part 72 stores the interrupt information supplied from the administration-processing unit 21. The third memory part 73 stores the train position information supplied from the train detection unit 57. The fourth memory part 74 stores the train status information supplied from the information transmission units 24 to 25. The fifth memory part 75 stores the platform door status information supplied from the platform door control units 55 to 56. The sixth memory part 76 stores the train advancing route status information supplied from the interlocking operation unit 58.

The selector 77, 78 and 79 are actuated in response to the application of the train position information together with the time information and select a train control command, a platform door control command and a route setting command respectively depending on the train service schedule. The first output part 80 supplies the selected train control command information to the

information transmission units 24 to 25. The second output part 81 supplies the selected platform door control command information to the platform door control units 55 to 56. The third output part 82 supplies the selected route setting command information to the interlocking operation unit 58.

The first checking part 83 compares the train control command information supplied from the first output part 80 to the information transmission units 24 to 25, with the train status information supplied to the first memory part 74 from the information transmission units 24 to 25, and if there is a non-coincidence therebetween, informs the administration-processing unit 21 of the presence of non-coincidence or trouble. The second checking part 84 compares the platform door control command information supplied from the second output part 81 to the platform door control units 55 to 56, with the platform door status information supplied to the fifth memory part 75 from the platform door control units 55 to 56, and, if there is a non-coincidence therebetween, informs the administration-processing unit 21 of the presence of non-coincidence or trouble. The third checking part 85 compares the route setting command information supplied from the third output part 82 to the interlocking operation unit 58, with the train advancing route status information supplied to the sixth memory part 76 from the interlocking operation unit 58, and, if there is a non-coincidence therebetween, informs the administration-processing unit 21 of the presence of non-coincidence

WABTEC EX1023

or trouble.

When such a non-coincidence is found as a result of the check for comparison between the train status information and the train control command information, between the platform door status information and the platform door control command information and/or between the train advancing route status information and the route setting command information, the control-processing unit 22 supplies a non-coincidence information output indicative of the presence of the non-coincidence or trouble to the administration-processing unit 21. Also the control-processing unit 22 supplies the train status information, platform door status information and train advancing route status information to the administration-processing unit 21.

The administration-processing unit 21 supplies the train service schedule information to the control-processing unit 22 and, when so required, supplies also manual interrupt information by the operator for train departure inhibition, emergency train stopping, door opening-closure, etc. with appropriate timing. On the basis of the train service schedule information and interrupt information and in response to the train position information applied together with the time information as trigger the control-processing unit 22 selects and stores the required train control command information, platform door control information and route setting command information in the respective selectors, and send these command information at appropriate timing. When a

predetermined period of time has elapsed or when any one of the statuses changes after sending of the command information from the control-processing unit 22, the specific status information and command information are checked to be compared with each other. When the result of the comparison check proves that there is a non-coincidence therebetween, the administration-processing unit 21 at the highest echelen is informed of the presence of non-coincidence or trouble.

The other control-processing unit 23 has a structure similar to that of the control-processing unit 22 and executes functions similar to those of the control-processing unit 22. Further, the second stage of the track construction work can be started at any desired time after the first stage of the track construction work was completed, and it can be made while the trains are running on the first stage track, and the second control-processing unit 23 can be very easily connected to the administration-processing unit 21 by connecting the exclusive circuit 63.

The information transmission units 24 to 27 transmit the command information to the trains 53 to 54 through the transmitter and receiver units 28 to 35 and the sections 37 to 48 of the information transmisstion line 36 according to a predetermined information transmission sequence. Further, the information transmission units 24 to 27 scan the status information of each of the trains 53 to 54 at intervals of a

predetermined period of time for detecting any change in the status of each train. When the result of scanning proves that a change has occurred in the status of any one of the trains, the corresponding one of the information transmission units 24 to 27 trainsmits the status information of the specific train to the associated one of the control-processing units 22 and 23 at the higher echelon.

The administration-processing unit 21 monitors the status of the train service administration and control system on the basis of the train status information, platform door status information and trouble information supplied from the control-processing units 22 and 23 and sends out interrupt information to the control-processing units 22 and 23. More precisely, the administration-processing unit 21 supplies to the control-processing units 22 and 23 the information including the train service schedule prepared for the train group, modified train service schedule required to deal with, for example, a change of the transportation demand and occurrence of an accident, and interrupt information for inhibiting departure of or emergency stopping of the train or trains, open-close control of the platform door or doors, etc. The administration-processing unit 21 functions also to offer various information indicative of the status of the system to the operators in the central control center, so that the operators monitoring the status of the system on the

control panel can operate the control console as required to supply to the control-processing units 22 and 23 the interrupt information for inhibiting departure or emergency stopping of a train or trains, open-close control of the platform door or doors, etc.

FIG. 5 is a block diagram of another preferred embodiment of the present invention. In FIG. 5, the scan reference numerals are used to designate the same or equivalent parts appearing in FIG. 3. It is to be noted that, in order to provide redundancy, the administration-processing unit 21, control-processing units 22 and 23, information transmission units 24 to 27, and transmitter and receiver units 28 to 35 shown in FIG. 3 are replaced by a dual or duplex configuration of administration-processing units 21a and 21b, control processing units 22a, 22b and 23a, 23b, information transmission units 24a, 24b, ..., 25a, 25b and 26a, 26b, ..., 27a, 27b, and transmitter and receiver units 28a, 28b, 29a, 29b, ..., 30a, 30b, 31a, 31b and 32a, 32b, 33a, 33b, ..., 34a, 34b, 35a, 35b. It will be seen that the administration-processing units 21a and 21b; control-processing units 22a, 22b and 23a, 23b; information transmission units 24a, 24b, ..., 25a, 25b and 26a, 26b, ..., 27a, 27b; and transmitter and receiver units 28a, 28b, 29a, 29b, ..., 30a, 30b, 31a, 31b and 32a, 32b, 33a, 33b, ..., 34a, 34b, 35a, 35b are provided in dual or duplex to operate as a dual system or duplex system. Therefore, the system constructed in this way can

operate with higher reliability. Although this redundant arrangement is applied to each of the administration-processing unit 21, control-processing units 22 and 23, information transmission units 24 to 27 and transmitter and receiver units 28 to 35 in FIG. 5, it may be applied to at least one of them.

It will be understood from the foregoing detailed description of the present invention that the distribution of processing functions to the processing units arranged in a hierarchy can increase the response speed for processing. Further, because of the arrangement in which the administration-processing unit, control-processing unit and information transmission units are collectively installed in the central control center to collect all of the information in the central control center, the operators in the central control center can readily intervene in the processing by the administration-processing unit or control-processing unit in the event of an emergency so that unmanning of the trains and stations can be achieved. Further, the system according to the present invention requires only a single information requires only a single information transmission line compared with the prior art system of the distributed control type. Therefore, the number of required units can be decreased and the system construction can be simplified, thereby to make easy the maintenance. Furthermore, because of the fact that the processing functions are so distributed that the

administration-processing unit participates in the processing for preparation of the train service schedule and the control-processing unit participates in the processing for train service control, an expansion of the sytem to deal with an extension of the track can be easily done compared with that in the prior art system of the centralized control type.

WABTEC EX1023

CLAIMS

1. A train service administration and control system including means for exchanging information including status information indicative of the operating status of a plurality of trains (53, ..., 54) running on the track, and command information controlling the operation of the train through an information transmission line (36) divided into a plurality of sections (37, 38, ..., 41, 42) of a predetermined length extending along the entire length of the track thereby controlling the train operation according to a train service schedule, characterized in that

a plurality of transmitter and receiver units (28, 29, ..., 30, 31) connected individually to said sections of said information transmission line, at least one information transmission unit (24, ..., 25) to be connected to at least one of said transmitter and receiver units, at least one control-processing unit (22) to be connected to said information transmission unit, and a single administration-processing unit (21) to be connected to said at least one control-processing unit, are connected to form a hierachy structure in this order with said administration-processing unit at the top echelon.

2. A train service administration and control systm as claimed in claim 1, characterized in that said administration-processing unit (21) and said control-processing unit (22) are connected to each other by an exclusive circuit (63).

3. A train service administration and control

system as claimed in claim 1 or 2, characterized in that at least one of said administration-processing unit (21), said control-processing unit (22), said information transmission unit (24, ..., 25) and the group of said plural transmitter and receive units (28, 29, ..., 30, 31) is further redundantly added to provide a multiplex system.

4. A train service administration and control systm, as claimed in claim 1, 2 or 3, characterized in that,

there are further provided a plurality of information transmission line sections (43, 44, ..., 47, 48) of a predetermined length extending along an extension of said track, a plurality of transmitter and receiver units (32, 33, ..., 34, 35) connected individually to said information transmission line sections, at least one information transmission unit (26, ..., 27) to be connected to at least one of said transmitter and receiver units, and at least one control-processing unit (23) to said information transmission unit, all of said units being disposed in a hierarchy in the above order, with said control-processing unit (23) being connected to said administration-processing unit (21) of the highest order in the hierarchy arrangement.

5. A method for train service administration and control by a train service administration and control system as claimed in claim 1, 2, 3 or 4, characterized in that at least one control-processing unit (22) is connected to a single administration-processing unit

(21), train service schedule information from said administration-processing unit is supplied to said control-processing unit, and the service of trains (53, ..., 54) existing within the governing range of said control-processing unit is controlled by the function of said control-processing unit.

WABTEC EX1023

FIG. 1

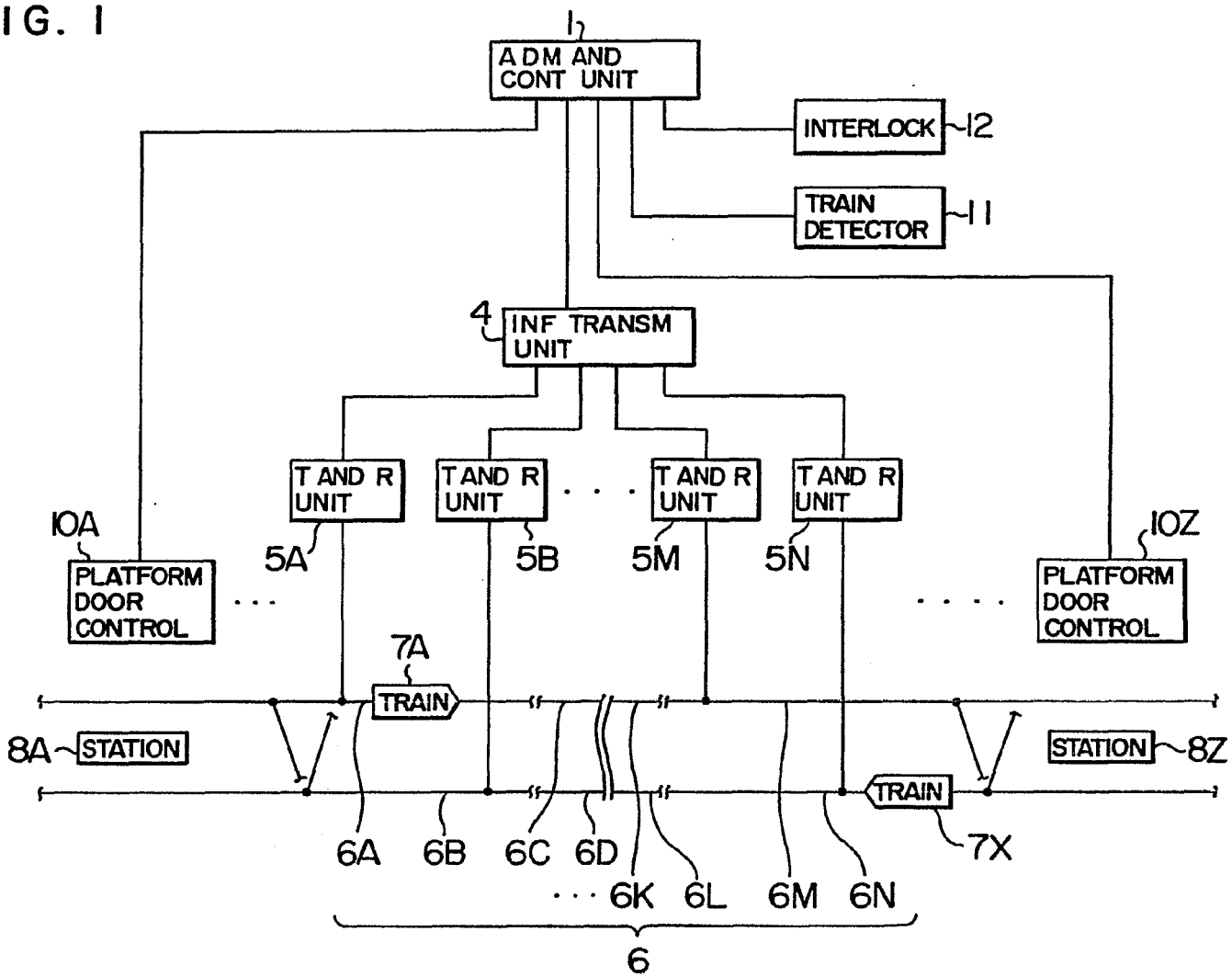

WABTEC EX1023

FIG. 2

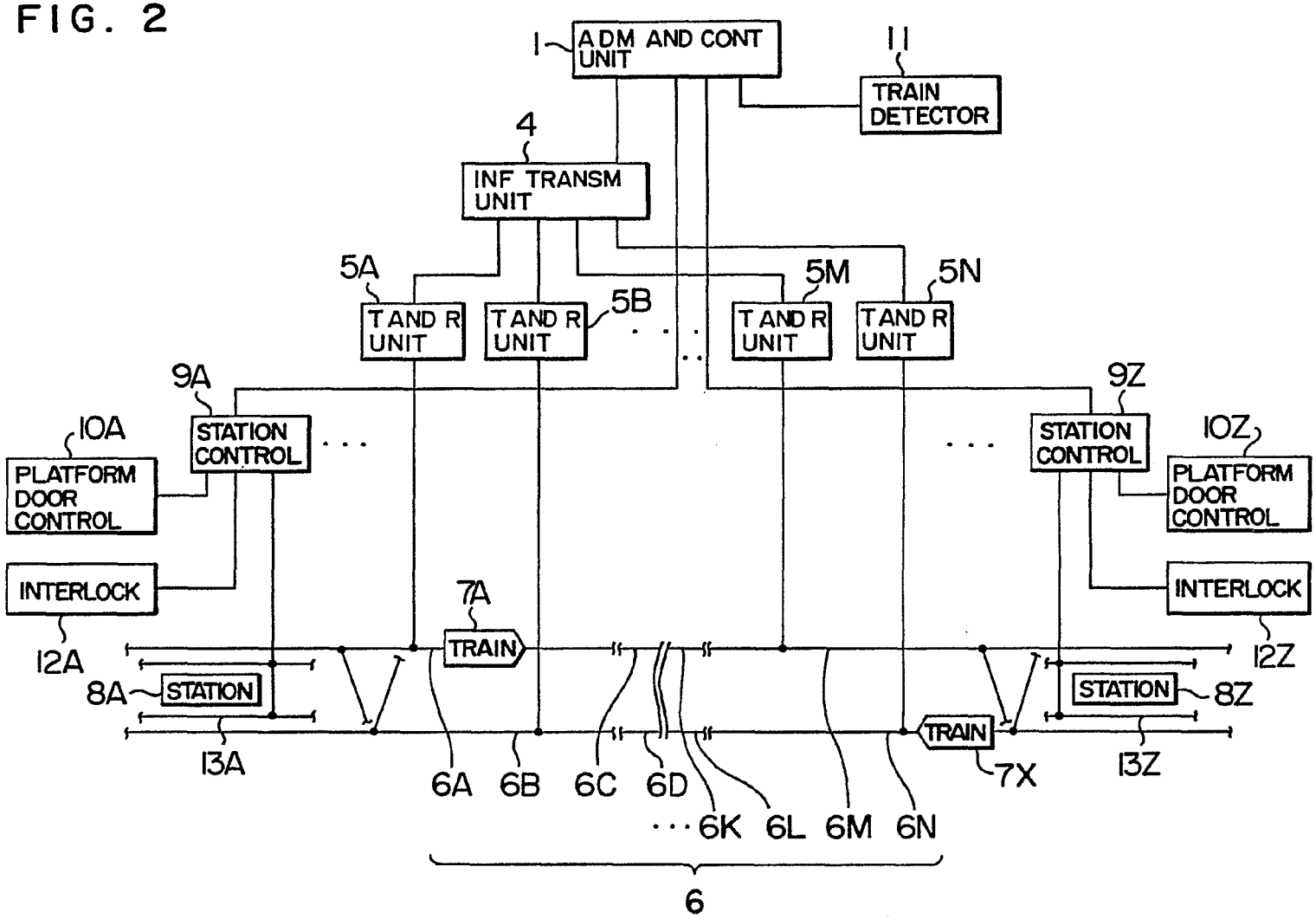

2/5

0108363

WABTEC EX1023

FIG. 3

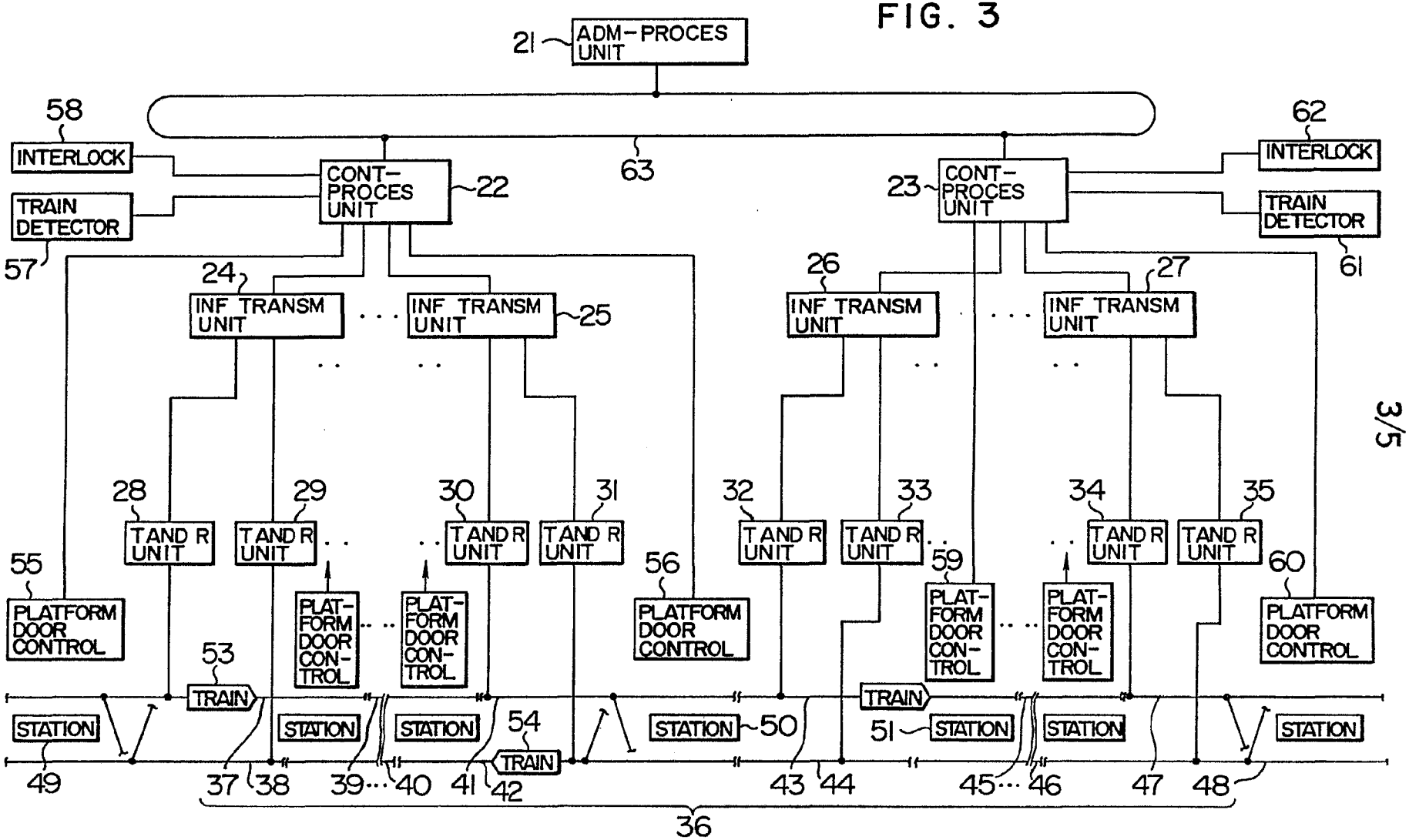

3/5

WABTEC EX1023

FIG. 4

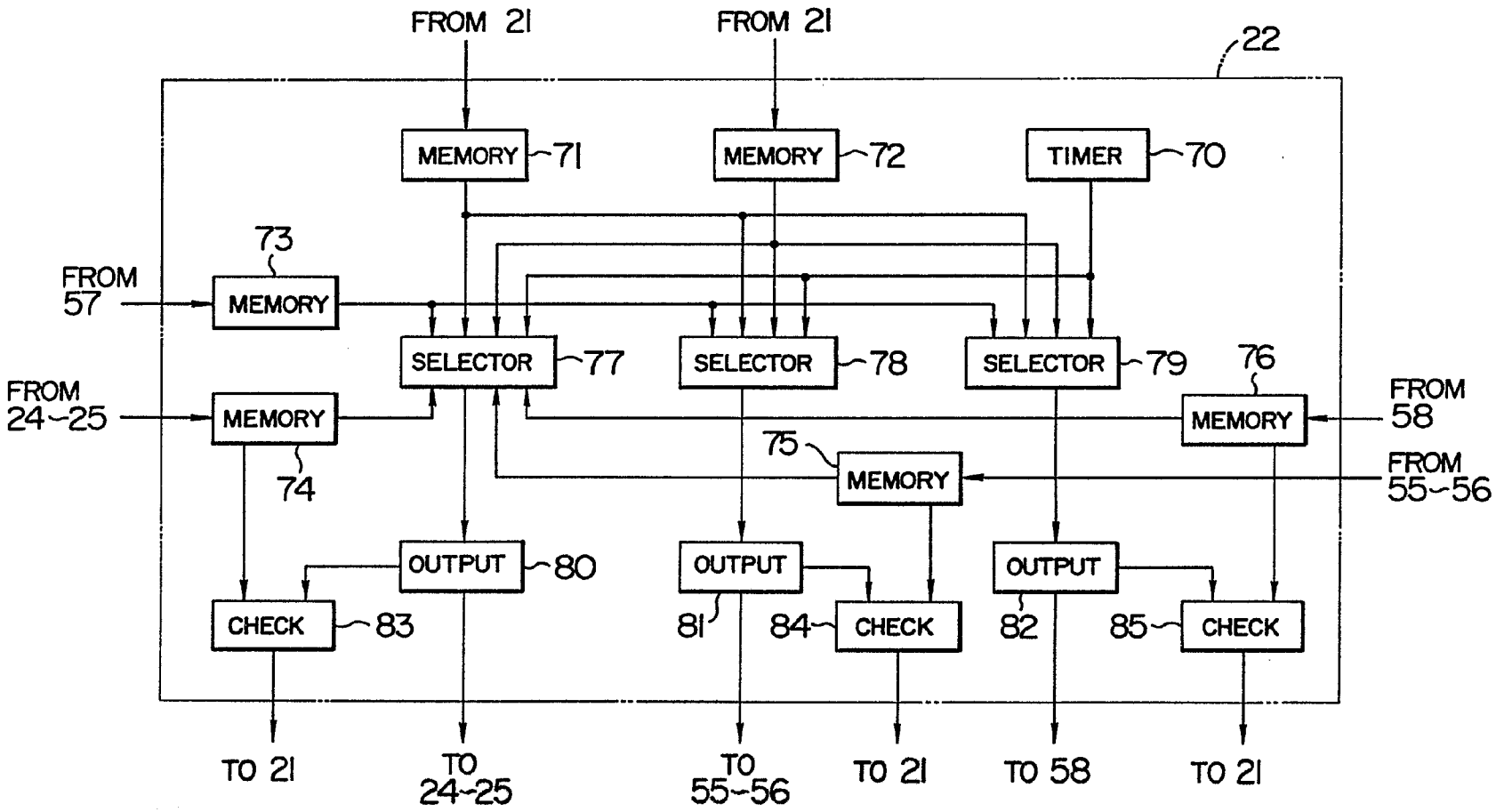

WABTEC EX1023

FIG. 5

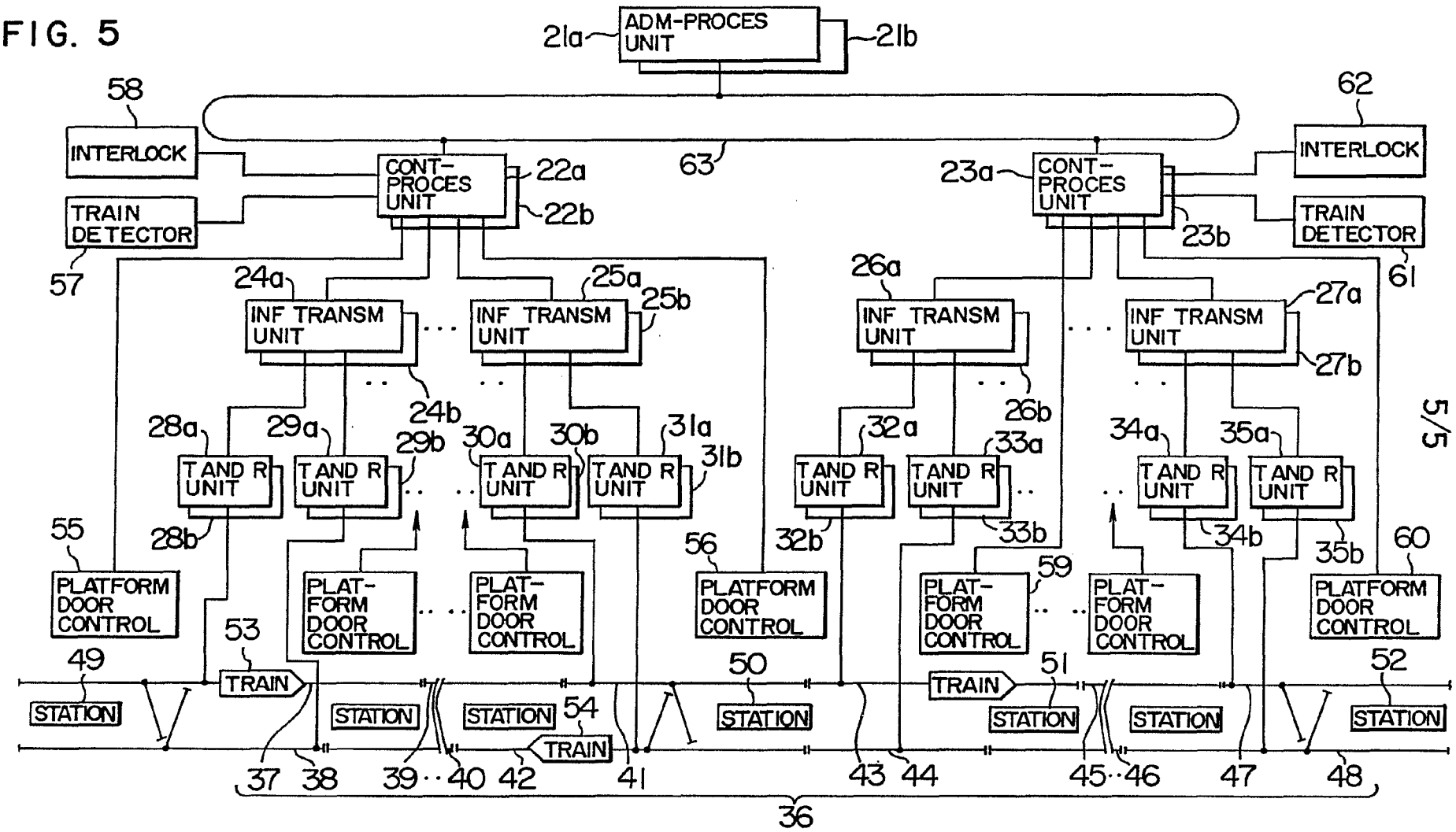

5/5

01083683

Electronic Acknowledgement Receipt

EFS ID:	20483114
Application Number:	14519727
International Application Number:	
Confirmation Number:	7580
Title of Invention:	TOOLS FOR RAILWAY TRAFFIC CONTROL
First Named Inventor/Applicant Name:	Ross Pirtle
Customer Number:	23432
Filer:	Paul Teng/Smith Piyanan
Filer Authorized By:	Paul Teng
Attorney Docket Number:	7552/85663
Receipt Date:	22-OCT-2014
Filing Date:	
Time Stamp:	11:46:19
Application Type:	Utility under 35 USC 111(a)

Payment information:

Submitted with Payment	no

File Listing:

Document Number	Document Description	File Name	File Size(Bytes)/ Message Digest	Multi Part /.zip	Pages (if appl.)
1	Information Disclosure Statement (IDS) Form (SB08)	85663--IDS1449.pdf	500817 ed0bb8cedc767331928dbdc992878a60c69fff68	no	4

Warnings:

Information:

WABTEC EX1023

This is not an USPTO supplied IDS fillable form

2	Foreign Reference	EP0108363.pdf	1079733 1904e832c5ee4417263ecbaefb61549e8c0f78ce	no	29
Warnings:					
Information:					
3	Non Patent Literature	BlackBerry-Based_WIC_Pager_Pilot_Program_at_Childrens_Hospital.pdf	282378 325c3bd44c0a7b259911a6a8c507e585e1511f49	no	6
Warnings:					
Information:					
4	Non Patent Literature	Centralized_Traffic_Control-Calvert.pdf	725624 6643aadac00da04f8b154fdccfe4016a86913acf	no	4
Warnings:					
Information:					
5	Non Patent Literature	Centralized_Traffic_Control-Wikipedia.pdf	787335 3790c0659c7d68f3b44add74131491027498df30	no	7
Warnings:					
Information:					
6	Non Patent Literature	Fatal_Accidents_Involving_Roadway_Workers-In-Charge_and_Lone_Workers.pdf	191844 8f214abbc9a97ea4f3785e25942442d01bbd68a4	no	5
Warnings:					
Information:					
7	Non Patent Literature	Healthcare_Communication_Interface_WIC_Pager_Philips_Emergin.pdf	98267 c1bc707d94d5c99ad51b44b54ef2463f6c255056	no	2
Warnings:					
Information:					
8	Non Patent Literature	Introduction_to_the_FAMES_Committee.pdf	425391 eb95111c938c11fe419dc7683af3b654ef3c5830	no	9
Warnings:					
Information:					
9	Non Patent Literature	Railroads_Traffic_Control_Systems.pdf	943511 89443e316629a530729cfe9da812df78314e2dd6	no	5
Warnings:					
Information:					
10	Non Patent Literature	Recent_Train_Traffic_Control_Systems.pdf	1219648 edbcfe4c4e282dfd595840a08e94cbd43a00b4f7	no	8

Warnings:					
Information:					
11	Non Patent Literature	SCC_Centralized_Traffic_Control_System_for_Lines_and_Area_Junctions.pdf	3301189 513573388ecb7cec77811e1b346c32010ce13702	no	7
Warnings:					
Information:					
12	Non Patent Literature	Train_Dispatcher-Wikipedia.pdf	297185 ae06832c4820b31f7880d5ffe9dfaecc06eb30ff	no	2
Warnings:					
Information:					
			Total Files Size (in bytes):	9852922	

This Acknowledgement Receipt evidences receipt on the noted date by the USPTO of the indicated documents, characterized by the applicant, and including page counts, where applicable. It serves as evidence of receipt similar to a Post Card, as described in MPEP 503.

<u>New Applications Under 35 U.S.C. 111</u>
If a new application is being filed and the application includes the necessary components for a filing date (see 37 CFR 1.53(b)-(d) and MPEP 506), a Filing Receipt (37 CFR 1.54) will be issued in due course and the date shown on this Acknowledgement Receipt will establish the filing date of the application.

<u>National Stage of an International Application under 35 U.S.C. 371</u>
If a timely submission to enter the national stage of an international application is compliant with the conditions of 35 U.S.C. 371 and other applicable requirements a Form PCT/DO/EO/903 indicating acceptance of the application as a national stage submission under 35 U.S.C. 371 will be issued in addition to the Filing Receipt, in due course.

<u>New International Application Filed with the USPTO as a Receiving Office</u>
If a new international application is being filed and the international application includes the necessary components for an international filing date (see PCT Article 11 and MPEP 1810), a Notification of the International Application Number and of the International Filing Date (Form PCT/RO/105) will be issued in due course, subject to prescriptions concerning national security, and the date shown on this Acknowledgement Receipt will establish the international filing date of the application.

PATENT APPLICATION FEE DETERMINATION RECORD

Substitute for Form PTO-875

Application or Docket Number
14/519,727

APPLICATION AS FILED - PART I

FOR	(Column 1) NUMBER FILED	(Column 2) NUMBER EXTRA	SMALL ENTITY RATE($)	SMALL ENTITY FEE($)	OR	OTHER THAN SMALL ENTITY RATE($)	OTHER THAN SMALL ENTITY FEE($)
BASIC FEE (37 CFR 1.16(a), (b), or (c))	N/A	N/A	N/A			N/A	280
SEARCH FEE (37 CFR 1.16(k), (i), or (m))	N/A	N/A	N/A			N/A	600
EXAMINATION FEE (37 CFR 1.16(o), (p), or (q))	N/A	N/A	N/A			N/A	720
TOTAL CLAIMS (37 CFR 1.16(i))	19 minus 20 =	*			OR	x 80 =	0.00
INDEPENDENT CLAIMS (37 CFR 1.16(h))	3 minus 3 =	*				x 420 =	0.00
APPLICATION SIZE FEE (37 CFR 1.16(s))	If the specification and drawings exceed 100 sheets of paper, the application size fee due is $310 ($155 for small entity) for each additional 50 sheets or fraction thereof. See 35 U.S.C. 41(a)(1)(G) and 37 CFR 1.16(s).						0.00
MULTIPLE DEPENDENT CLAIM PRESENT (37 CFR 1.16(j))							0.00
* If the difference in column 1 is less than zero, enter "0" in column 2.			TOTAL			TOTAL	1600

APPLICATION AS AMENDED - PART II

		(Column 1) CLAIMS REMAINING AFTER AMENDMENT		(Column 2) HIGHEST NUMBER PREVIOUSLY PAID FOR	(Column 3) PRESENT EXTRA	SMALL ENTITY RATE($)	SMALL ENTITY ADDITIONAL FEE($)	OR	OTHER THAN SMALL ENTITY RATE($)	OTHER THAN SMALL ENTITY ADDITIONAL FEE($)
AMENDMENT A	Total (37 CFR 1.16(i))	*	Minus	**	=	x =		OR	x =	
AMENDMENT A	Independent (37 CFR 1.16(h))	*	Minus	***	=	x =		OR	x =	
AMENDMENT A	Application Size Fee (37 CFR 1.16(s))									
AMENDMENT A	FIRST PRESENTATION OF MULTIPLE DEPENDENT CLAIM (37 CFR 1.16(j))							OR		
						TOTAL ADD'L FEE		OR	TOTAL ADD'L FEE	

		(Column 1) CLAIMS REMAINING AFTER AMENDMENT		(Column 2) HIGHEST NUMBER PREVIOUSLY PAID FOR	(Column 3) PRESENT EXTRA	RATE($)	ADDITIONAL FEE($)	OR	RATE($)	ADDITIONAL FEE($)
AMENDMENT B	Total (37 CFR 1.16(i))	*	Minus	**	=	x =		OR	x =	
AMENDMENT B	Independent (37 CFR 1.16(h))	*	Minus	***	=	x =		OR	x =	
AMENDMENT B	Application Size Fee (37 CFR 1.16(s))									
AMENDMENT B	FIRST PRESENTATION OF MULTIPLE DEPENDENT CLAIM (37 CFR 1.16(j))							OR		
						TOTAL ADD'L FEE		OR	TOTAL ADD'L FEE	

* If the entry in column 1 is less than the entry in column 2, write "0" in column 3.
** If the "Highest Number Previously Paid For" IN THIS SPACE is less than 20, enter "20".
*** If the "Highest Number Previously Paid For" IN THIS SPACE is less than 3, enter "3".
The "Highest Number Previously Paid For" (Total or Independent) is the highest found in the appropriate box in column 1.

UNITED STATES PATENT AND TRADEMARK OFFICE

UNITED STATES DEPARTMENT OF COMMERCE
United States Patent and Trademark Office
Address: COMMISSIONER FOR PATENTS
P.O. Box 1450
Alexandria, Virginia 22313-1450
www.uspto.gov

APPLICATION NUMBER	FILING or 371(c) DATE	GRP ART UNIT	FIL FEE REC'D	ATTY.DOCKET.NO	TOT CLAIMS	IND CLAIMS
14/519,727	10/21/2014	3617	1600	7552/85663	19	3

CONFIRMATION NO. 7580

23432
COOPER & DUNHAM, LLP
30 Rockefeller Plaza
20th Floor
NEW YORK, NY 10112

FILING RECEIPT

OC000000071634261

Date Mailed: 10/30/2014

Receipt is acknowledged of this non-provisional patent application. The application will be taken up for examination in due course. Applicant will be notified as to the results of the examination. Any correspondence concerning the application must include the following identification information: the U.S. APPLICATION NUMBER, FILING DATE, NAME OF APPLICANT, and TITLE OF INVENTION. Fees transmitted by check or draft are subject to collection. Please verify the accuracy of the data presented on this receipt. **If an error is noted on this Filing Receipt, please submit a written request for a Filing Receipt Correction. Please provide a copy of this Filing Receipt with the changes noted thereon. If you received a "Notice to File Missing Parts" for this application, please submit any corrections to this Filing Receipt with your reply to the Notice. When the USPTO processes the reply to the Notice, the USPTO will generate another Filing Receipt incorporating the requested corrections**

Inventor(s)
Ross Pirtle, Commack, NY;

Applicant(s)
Ross Pirtle, Commack, NY;

Assignment For Published Patent Application
RAILWARE, INC., Ronkonkoma, NY

Power of Attorney: The patent practitioners associated with Customer Number 23432

Domestic Priority data as claimed by applicant
This appln claims benefit of 61/893,547 10/21/2013

Foreign Applications for which priority is claimed (You may be eligible to benefit from the **Patent Prosecution Highway** program at the USPTO. Please see http://www.uspto.gov for more information.) - None.
Foreign application information must be provided in an Application Data Sheet in order to constitute a claim to foreign priority. See 37 CFR 1.55 and 1.76.

If Required, Foreign Filing License Granted: 10/28/2014

The country code and number of your priority application, to be used for filing abroad under the Paris Convention, is **US 14/519,727**

Projected Publication Date: 04/23/2015

Non-Publication Request: No

Early Publication Request: No

WABTEC EX1023

Title

TOOLS FOR RAILWAY TRAFFIC CONTROL

Preliminary Class

246

Statement under 37 CFR 1.55 or 1.78 for AIA (First Inventor to File) Transition Applications: No

PROTECTING YOUR INVENTION OUTSIDE THE UNITED STATES

Since the rights granted by a U.S. patent extend only throughout the territory of the United States and have no effect in a foreign country, an inventor who wishes patent protection in another country must apply for a patent in a specific country or in regional patent offices. Applicants may wish to consider the filing of an international application under the Patent Cooperation Treaty (PCT). An international (PCT) application generally has the same effect as a regular national patent application in each PCT-member country. The PCT process **simplifies** the filing of patent applications on the same invention in member countries, but **does not result** in a grant of "an international patent" and does not eliminate the need of applicants to file additional documents and fees in countries where patent protection is desired.

Almost every country has its own patent law, and a person desiring a patent in a particular country must make an application for patent in that country in accordance with its particular laws. Since the laws of many countries differ in various respects from the patent law of the United States, applicants are advised to seek guidance from specific foreign countries to ensure that patent rights are not lost prematurely.

Applicants also are advised that in the case of inventions made in the United States, the Director of the USPTO must issue a license before applicants can apply for a patent in a foreign country. The filing of a U.S. patent application serves as a request for a foreign filing license. The application's filing receipt contains further information and guidance as to the status of applicant's license for foreign filing.

Applicants may wish to consult the USPTO booklet, "General Information Concerning Patents" (specifically, the section entitled "Treaties and Foreign Patents") for more information on timeframes and deadlines for filing foreign patent applications. The guide is available either by contacting the USPTO Contact Center at 800-786-9199, or it can be viewed on the USPTO website at http://www.uspto.gov/web/offices/pac/doc/general/index.html.

For information on preventing theft of your intellectual property (patents, trademarks and copyrights), you may wish to consult the U.S. Government website, http://www.stopfakes.gov. Part of a Department of Commerce initiative, this website includes self-help "toolkits" giving innovators guidance on how to protect intellectual property in specific countries such as China, Korea and Mexico. For questions regarding patent enforcement issues, applicants may call the U.S. Government hotline at 1-866-999-HALT (1-866-999-4258).

WABTEC EX1023

LICENSE FOR FOREIGN FILING UNDER

Title 35, United States Code, Section 184

Title 37, Code of Federal Regulations, 5.11 & 5.15

GRANTED

The applicant has been granted a license under 35 U.S.C. 184, if the phrase "IF REQUIRED, FOREIGN FILING LICENSE GRANTED" followed by a date appears on this form. Such licenses are issued in all applications where the conditions for issuance of a license have been met, regardless of whether or not a license may be required as set forth in 37 CFR 5.15. The scope and limitations of this license are set forth in 37 CFR 5.15(a) unless an earlier license has been issued under 37 CFR 5.15(b). The license is subject to revocation upon written notification. The date indicated is the effective date of the license, unless an earlier license of similar scope has been granted under 37 CFR 5.13 or 5.14.

This license is to be retained by the licensee and may be used at any time on or after the effective date thereof unless it is revoked. This license is automatically transferred to any related applications(s) filed under 37 CFR 1.53(d). This license is not retroactive.

The grant of a license does not in any way lessen the responsibility of a licensee for the security of the subject matter as imposed by any Government contract or the provisions of existing laws relating to espionage and the national security or the export of technical data. Licensees should apprise themselves of current regulations especially with respect to certain countries, of other agencies, particularly the Office of Defense Trade Controls, Department of State (with respect to Arms, Munitions and Implements of War (22 CFR 121-128)); the Bureau of Industry and Security, Department of Commerce (15 CFR parts 730-774); the Office of Foreign AssetsControl, Department of Treasury (31 CFR Parts 500+) and the Department of Energy.

NOT GRANTED

No license under 35 U.S.C. 184 has been granted at this time, if the phrase "IF REQUIRED, FOREIGN FILING LICENSE GRANTED" DOES NOT appear on this form. Applicant may still petition for a license under 37 CFR 5.12, if a license is desired before the expiration of 6 months from the filing date of the application. If 6 months has lapsed from the filing date of this application and the licensee has not received any indication of a secrecy order under 35 U.S.C. 181, the licensee may foreign file the application pursuant to 37 CFR 5.15(b).

SelectUSA

The United States represents the largest, most dynamic marketplace in the world and is an unparalleled location for business investment, innovation, and commercialization of new technologies. The U.S. offers tremendous resources and advantages for those who invest and manufacture goods here. Through SelectUSA, our nation works to promote and facilitate business investment. SelectUSA provides information assistance to the international investor community; serves as an ombudsman for existing and potential investors; advocates on behalf of U.S. cities, states, and regions competing for global investment; and counsels U.S. economic development organizations on investment attraction best practices. To learn more about why the United States is the best country in the world to develop technology, manufacture products, deliver services, and grow your business, visit http://www.SelectUSA.gov or call +1-202-482-6800.

WABTEC EX1023

UNITED STATES PATENT AND TRADEMARK OFFICE

UNITED STATES DEPARTMENT OF COMMERCE
United States Patent and Trademark Office
Address: COMMISSIONER FOR PATENTS
P.O. Box 1450
Alexandria, Virginia 22313-1450
www.uspto.gov

APPLICATION NUMBER	FILING OR 371(C) DATE	FIRST NAMED APPLICANT	ATTY. DOCKET NO./TITLE
14/519,727	10/21/2014	Ross Pirtle	7552/85663

CONFIRMATION NO. 7580

PUBLICATION NOTICE

OC000000074778208

23432
COOPER & DUNHAM, LLP
30 Rockefeller Plaza
20th Floor
NEW YORK, NY 10112

Title:TOOLS FOR RAILWAY TRAFFIC CONTROL

Publication No.US-2015-0108284-A1
Publication Date:04/23/2015

NOTICE OF PUBLICATION OF APPLICATION

The above-identified application will be electronically published as a patent application publication pursuant to 37 CFR 1.211, et seq. The patent application publication number and publication date are set forth above.

The publication may be accessed through the USPTO's publically available Searchable Databases via the Internet at www.uspto.gov. The direct link to access the publication is currently http://www.uspto.gov/patft/.

The publication process established by the Office does not provide for mailing a copy of the publication to applicant. A copy of the publication may be obtained from the Office upon payment of the appropriate fee set forth in 37 CFR 1.19(a)(1). Orders for copies of patent application publications are handled by the USPTO's Office of Public Records. The Office of Public Records can be reached by telephone at (703) 308-9726 or (800) 972-6382, by facsimile at (703) 305-8759, by mail addressed to the United States Patent and Trademark Office, Office of Public Records, Alexandria, VA 22313-1450 or via the Internet.

In addition, information on the status of the application, including the mailing date of Office actions and the dates of receipt of correspondence filed in the Office, may also be accessed via the Internet through the Patent Electronic Business Center at www.uspto.gov using the public side of the Patent Application Information and Retrieval (PAIR) system. The direct link to access this status information is currently http://pair.uspto.gov/. Prior to publication, such status information is confidential and may only be obtained by applicant using the private side of PAIR.

Further assistance in electronically accessing the publication, or about PAIR, is available by calling the Patent Electronic Business Center at 1-866-217-9197.

Office of Data Managment, Application Assistance Unit (571) 272-4000, or (571) 272-4200, or 1-888-786-0101

WABTEC EX1023

UNITED STATES PATENT AND TRADEMARK OFFICE

UNITED STATES DEPARTMENT OF COMMERCE
United States Patent and Trademark Office
Address: COMMISSIONER FOR PATENTS
P.O. Box 1450
Alexandria, Virginia 22313-1450
www.uspto.gov

NOTICE OF ALLOWANCE AND FEE(S) DUE

23432 7590 03/03/2016
COOPER & DUNHAM, LLP
30 Rockefeller Plaza
20th Floor
NEW YORK, NY 10112

EXAMINER
SMITH, JASON C

ART UNIT	PAPER NUMBER
3617	

DATE MAILED: 03/03/2016

APPLICATION NO.	FILING DATE	FIRST NAMED INVENTOR	ATTORNEY DOCKET NO.	CONFIRMATION NO.
14/519,727	10/21/2014	Ross Pirtle	7552/85663	7580

TITLE OF INVENTION: TOOLS FOR RAILWAY TRAFFIC CONTROL

APPLN. TYPE	ENTITY STATUS	ISSUE FEE DUE	PUBLICATION FEE DUE	PREV. PAID ISSUE FEE	TOTAL FEE(S) DUE	DATE DUE
nonprovisional	UNDISCOUNTED	$960	$0	$0	$960	06/03/2016

THE APPLICATION IDENTIFIED ABOVE HAS BEEN EXAMINED AND IS ALLOWED FOR ISSUANCE AS A PATENT. PROSECUTION ON THE MERITS IS CLOSED. THIS NOTICE OF ALLOWANCE IS NOT A GRANT OF PATENT RIGHTS. THIS APPLICATION IS SUBJECT TO WITHDRAWAL FROM ISSUE AT THE INITIATIVE OF THE OFFICE OR UPON PETITION BY THE APPLICANT. SEE 37 CFR 1.313 AND MPEP 1308.

THE ISSUE FEE AND PUBLICATION FEE (IF REQUIRED) MUST BE PAID WITHIN THREE MONTHS FROM THE MAILING DATE OF THIS NOTICE OR THIS APPLICATION SHALL BE REGARDED AS ABANDONED. THIS STATUTORY PERIOD CANNOT BE EXTENDED. SEE 35 U.S.C. 151. THE ISSUE FEE DUE INDICATED ABOVE DOES NOT REFLECT A CREDIT FOR ANY PREVIOUSLY PAID ISSUE FEE IN THIS APPLICATION. IF AN ISSUE FEE HAS PREVIOUSLY BEEN PAID IN THIS APPLICATION (AS SHOWN ABOVE), THE RETURN OF PART B OF THIS FORM WILL BE CONSIDERED A REQUEST TO REAPPLY THE PREVIOUSLY PAID ISSUE FEE TOWARD THE ISSUE FEE NOW DUE.

HOW TO REPLY TO THIS NOTICE:

I. Review the ENTITY STATUS shown above. If the ENTITY STATUS is shown as SMALL or MICRO, verify whether entitlement to that entity status still applies.

If the ENTITY STATUS is the same as shown above, pay the TOTAL FEE(S) DUE shown above.

If the ENTITY STATUS is changed from that shown above, on PART B - FEE(S) TRANSMITTAL, complete section number 5 titled "Change in Entity Status (from status indicated above)".

For purposes of this notice, small entity fees are 1/2 the amount of undiscounted fees, and micro entity fees are 1/2 the amount of small entity fees.

II. PART B - FEE(S) TRANSMITTAL, or its equivalent, must be completed and returned to the United States Patent and Trademark Office (USPTO) with your ISSUE FEE and PUBLICATION FEE (if required). If you are charging the fee(s) to your deposit account, section "4b" of Part B - Fee(s) Transmittal should be completed and an extra copy of the form should be submitted. If an equivalent of Part B is filed, a request to reapply a previously paid issue fee must be clearly made, and delays in processing may occur due to the difficulty in recognizing the paper as an equivalent of Part B.

III. All communications regarding this application must give the application number. Please direct all communications prior to issuance to Mail Stop ISSUE FEE unless advised to the contrary.

IMPORTANT REMINDER: Utility patents issuing on applications filed on or after Dec. 12, 1980 may require payment of maintenance fees. It is patentee's responsibility to ensure timely payment of maintenance fees when due.

WABTEC EX1023

PART B - FEE(S) TRANSMITTAL

Complete and send this form, together with applicable fee(s), to: Mail **Mail Stop ISSUE FEE**
Commissioner for Patents
P.O. Box 1450
Alexandria, Virginia 22313-1450
or Fax (571)-273-2885

INSTRUCTIONS: This form should be used for transmitting the ISSUE FEE and PUBLICATION FEE (if required). Blocks 1 through 5 should be completed where appropriate. All further correspondence including the Patent, advance orders and notification of maintenance fees will be mailed to the current correspondence address as indicated unless corrected below or directed otherwise in Block 1, by (a) specifying a new correspondence address; and/or (b) indicating a separate "FEE ADDRESS" for maintenance fee notifications.

CURRENT CORRESPONDENCE ADDRESS (Note: Use Block 1 for any change of address)

23432 7590 03/03/2016
COOPER & DUNHAM, LLP
30 Rockefeller Plaza
20th Floor
NEW YORK, NY 10112

Note: A certificate of mailing can only be used for domestic mailings of the Fee(s) Transmittal. This certificate cannot be used for any other accompanying papers. Each additional paper, such as an assignment or formal drawing, must have its own certificate of mailing or transmission.

Certificate of Mailing or Transmission
I hereby certify that this Fee(s) Transmittal is being deposited with the United States Postal Service with sufficient postage for first class mail in an envelope addressed to the Mail Stop ISSUE FEE address above, or being facsimile transmitted to the USPTO (571) 273-2885, on the date indicated below.

(Depositor's name)
(Signature)
(Date)

APPLICATION NO.	FILING DATE	FIRST NAMED INVENTOR	ATTORNEY DOCKET NO.	CONFIRMATION NO.
14/519,727	10/21/2014	Ross Pirtle	7552/85663	7580

TITLE OF INVENTION: TOOLS FOR RAILWAY TRAFFIC CONTROL

APPLN. TYPE	ENTITY STATUS	ISSUE FEE DUE	PUBLICATION FEE DUE	PREV. PAID ISSUE FEE	TOTAL FEE(S) DUE	DATE DUE
nonprovisional	UNDISCOUNTED	$960	$0	$0	$960	06/03/2016

EXAMINER	ART UNIT	CLASS-SUBCLASS
SMITH, JASON C	3617	246-003000

1. Change of correspondence address or indication of "Fee Address" (37 CFR 1.363).
❑ Change of correspondence address (or Change of Correspondence Address form PTO/SB/122) attached.
❑ "Fee Address" indication (or "Fee Address" Indication form PTO/SB/47; Rev 03-02 or more recent) attached. **Use of a Customer Number is required.**

2. For printing on the patent front page, list
(1) The names of up to 3 registered patent attorneys or agents OR, alternatively,
(2) The name of a single firm (having as a member a registered attorney or agent) and the names of up to 2 registered patent attorneys or agents. If no name is listed, no name will be printed.
1_____
2_____
3_____

3. ASSIGNEE NAME AND RESIDENCE DATA TO BE PRINTED ON THE PATENT (print or type)

PLEASE NOTE: Unless an assignee is identified below, no assignee data will appear on the patent. If an assignee is identified below, the document has been filed for recordation as set forth in 37 CFR 3.11. Completion of this form is NOT a substitute for filing an assignment.

(A) NAME OF ASSIGNEE (B) RESIDENCE: (CITY and STATE OR COUNTRY)

Please check the appropriate assignee category or categories (will not be printed on the patent) : ❑ Individual ❑ Corporation or other private group entity ❑ Government

4a. The following fee(s) are submitted:
❑ Issue Fee
❑ Publication Fee (No small entity discount permitted)
❑ Advance Order - # of Copies _____

4b. Payment of Fee(s): (**Please first reapply any previously paid issue fee shown above**)
❑ A check is enclosed.
❑ Payment by credit card. Form PTO-2038 is attached.
❑ The director is hereby authorized to charge the required fee(s), any deficiency, or credits any overpayment, to Deposit Account Number _____ (enclose an extra copy of this form).

5. **Change in Entity Status** (from status indicated above)
❑ Applicant certifying micro entity status. See 37 CFR 1.29 — NOTE: Absent a valid certification of Micro Entity Status (see forms PTO/SB/15A and 15B), issue fee payment in the micro entity amount will not be accepted at the risk of application abandonment.
❑ Applicant asserting small entity status. See 37 CFR 1.27 — NOTE: If the application was previously under micro entity status, checking this box will be taken to be a notification of loss of entitlement to micro entity status.
❑ Applicant changing to regular undiscounted fee status. — NOTE: Checking this box will be taken to be a notification of loss of entitlement to small or micro entity status, as applicable.

NOTE: This form must be signed in accordance with 37 CFR 1.31 and 1.33. See 37 CFR 1.4 for signature requirements and certifications.

Authorized Signature _____ Date _____

Typed or printed name _____ Registration No. _____

WABTEC EX1023

UNITED STATES PATENT AND TRADEMARK OFFICE

UNITED STATES DEPARTMENT OF COMMERCE
United States Patent and Trademark Office
Address: COMMISSIONER FOR PATENTS
P.O. Box 1450
Alexandria, Virginia 22313-1450
www.uspto.gov

APPLICATION NO.	FILING DATE	FIRST NAMED INVENTOR	ATTORNEY DOCKET NO.	CONFIRMATION NO.
14/519,727	10/21/2014	Ross Pirtle	7552/85663	7580

23432 7590 03/03/2016
COOPER & DUNHAM, LLP
30 Rockefeller Plaza
20th Floor
NEW YORK, NY 10112

EXAMINER
SMITH, JASON C

ART UNIT	PAPER NUMBER
3617	

DATE MAILED: 03/03/2016

Determination of Patent Term Adjustment under 35 U.S.C. 154 (b)
(Applications filed on or after May 29, 2000)

The Office has discontinued providing a Patent Term Adjustment (PTA) calculation with the Notice of Allowance.

Section 1(h)(2) of the AIA Technical Corrections Act amended 35 U.S.C. 154(b)(3)(B)(i) to eliminate the requirement that the Office provide a patent term adjustment determination with the notice of allowance. See Revisions to Patent Term Adjustment, 78 Fed. Reg. 19416, 19417 (Apr. 1, 2013). Therefore, the Office is no longer providing an initial patent term adjustment determination with the notice of allowance. The Office will continue to provide a patent term adjustment determination with the Issue Notification Letter that is mailed to applicant approximately three weeks prior to the issue date of the patent, and will include the patent term adjustment on the patent. Any request for reconsideration of the patent term adjustment determination (or reinstatement of patent term adjustment) should follow the process outlined in 37 CFR 1.705.

Any questions regarding the Patent Term Extension or Adjustment determination should be directed to the Office of Patent Legal Administration at (571)-272-7702. Questions relating to issue and publication fee payments should be directed to the Customer Service Center of the Office of Patent Publication at 1-(888)-786-0101 or (571)-272-4200.

WABTEC EX1023

OMB Clearance and PRA Burden Statement for PTOL-85 Part B

The Paperwork Reduction Act (PRA) of 1995 requires Federal agencies to obtain Office of Management and Budget approval before requesting most types of information from the public. When OMB approves an agency request to collect information from the public, OMB (i) provides a valid OMB Control Number and expiration date for the agency to display on the instrument that will be used to collect the information and (ii) requires the agency to inform the public about the OMB Control Number's legal significance in accordance with 5 CFR 1320.5(b).

The information collected by PTOL-85 Part B is required by 37 CFR 1.311. The information is required to obtain or retain a benefit by the public which is to file (and by the USPTO to process) an application. Confidentiality is governed by 35 U.S.C. 122 and 37 CFR 1.14. This collection is estimated to take 12 minutes to complete, including gathering, preparing, and submitting the completed application form to the USPTO. Time will vary depending upon the individual case. Any comments on the amount of time you require to complete this form and/or suggestions for reducing this burden, should be sent to the Chief Information Officer, U.S. Patent and Trademark Office, U.S. Department of Commerce, P.O. Box 1450, Alexandria, Virginia 22313-1450. DO NOT SEND FEES OR COMPLETED FORMS TO THIS ADDRESS. SEND TO: Commissioner for Patents, P.O. Box 1450, Alexandria, Virginia 22313-1450. Under the Paperwork Reduction Act of 1995, no persons are required to respond to a collection of information unless it displays a valid OMB control number.

Privacy Act Statement

The Privacy Act of 1974 (P.L. 93-579) requires that you be given certain information in connection with your submission of the attached form related to a patent application or patent. Accordingly, pursuant to the requirements of the Act, please be advised that: (1) the general authority for the collection of this information is 35 U.S.C. 2(b)(2); (2) furnishing of the information solicited is voluntary; and (3) the principal purpose for which the information is used by the U.S. Patent and Trademark Office is to process and/or examine your submission related to a patent application or patent. If you do not furnish the requested information, the U.S. Patent and Trademark Office may not be able to process and/or examine your submission, which may result in termination of proceedings or abandonment of the application or expiration of the patent.

The information provided by you in this form will be subject to the following routine uses:

1. The information on this form will be treated confidentially to the extent allowed under the Freedom of Information Act (5 U.S.C. 552) and the Privacy Act (5 U.S.C 552a). Records from this system of records may be disclosed to the Department of Justice to determine whether disclosure of these records is required by the Freedom of Information Act.
2. A record from this system of records may be disclosed, as a routine use, in the course of presenting evidence to a court, magistrate, or administrative tribunal, including disclosures to opposing counsel in the course of settlement negotiations.
3. A record in this system of records may be disclosed, as a routine use, to a Member of Congress submitting a request involving an individual, to whom the record pertains, when the individual has requested assistance from the Member with respect to the subject matter of the record.
4. A record in this system of records may be disclosed, as a routine use, to a contractor of the Agency having need for the information in order to perform a contract. Recipients of information shall be required to comply with the requirements of the Privacy Act of 1974, as amended, pursuant to 5 U.S.C. 552a(m).
5. A record related to an International Application filed under the Patent Cooperation Treaty in this system of records may be disclosed, as a routine use, to the International Bureau of the World Intellectual Property Organization, pursuant to the Patent Cooperation Treaty.
6. A record in this system of records may be disclosed, as a routine use, to another federal agency for purposes of National Security review (35 U.S.C. 181) and for review pursuant to the Atomic Energy Act (42 U.S.C. 218(c)).
7. A record from this system of records may be disclosed, as a routine use, to the Administrator, General Services, or his/her designee, during an inspection of records conducted by GSA as part of that agency's responsibility to recommend improvements in records management practices and programs, under authority of 44 U.S.C. 2904 and 2906. Such disclosure shall be made in accordance with the GSA regulations governing inspection of records for this purpose, and any other relevant (i.e., GSA or Commerce) directive. Such disclosure shall not be used to make determinations about individuals.
8. A record from this system of records may be disclosed, as a routine use, to the public after either publication of the application pursuant to 35 U.S.C. 122(b) or issuance of a patent pursuant to 35 U.S.C. 151. Further, a record may be disclosed, subject to the limitations of 37 CFR 1.14, as a routine use, to the public if the record was filed in an application which became abandoned or in which the proceedings were terminated and which application is referenced by either a published application, an application open to public inspection or an issued patent.
9. A record from this system of records may be disclosed, as a routine use, to a Federal, State, or local law enforcement agency, if the USPTO becomes aware of a violation or potential violation of law or regulation.

WABTEC EX1023

Notice of Allowability	Application No. 14/519,727	Applicant(s) PIRTLE, ROSS	
	Examiner JASON C. SMITH	Art Unit 3617	AIA (First Inventor to File) Status Yes

-- The MAILING DATE of this communication appears on the cover sheet with the correspondence address--

All claims being allowable, PROSECUTION ON THE MERITS IS (OR REMAINS) CLOSED in this application. If not included herewith (or previously mailed), a Notice of Allowance (PTOL-85) or other appropriate communication will be mailed in due course. **THIS NOTICE OF ALLOWABILITY IS NOT A GRANT OF PATENT RIGHTS.** This application is subject to withdrawal from issue at the initiative of the Office or upon petition by the applicant. See 37 CFR 1.313 and MPEP 1308.

1. ☒ This communication is responsive to *10/21/2014*.
   ☐ A declaration(s)/affidavit(s) under **37 CFR 1.130(b)** was/were filed on_____.
2. ☐ An election was made by the applicant in response to a restriction requirement set forth during the interview on _____; the restriction requirement and election have been incorporated into this action.
3. ☒ The allowed claim(s) is/are *1-19*. As a result of the allowed claim(s), you may be eligible to benefit from the **Patent Prosecution Highway** program at a participating intellectual property office for the corresponding application. For more information, please see http://www.uspto.gov/patents/init_events/pph/index.jsp or send an inquiry to PPHfeedback@uspto.gov .
4. ☐ Acknowledgment is made of a claim for foreign priority under 35 U.S.C. § 119(a)-(d) or (f).

   Certified copies:

   a) ☐ All b) ☐ Some *c) ☐ None of the:
   1. ☐ Certified copies of the priority documents have been received.
   2. ☐ Certified copies of the priority documents have been received in Application No. _____ .
   3. ☐ Copies of the certified copies of the priority documents have been received in this national stage application from the International Bureau (PCT Rule 17.2(a)).

   * Certified copies not received: _____.

Applicant has THREE MONTHS FROM THE "MAILING DATE" of this communication to file a reply complying with the requirements noted below. Failure to timely comply will result in ABANDONMENT of this application.
THIS THREE-MONTH PERIOD IS NOT EXTENDABLE.

5. ☐ CORRECTED DRAWINGS (as "replacement sheets") must be submitted.
   ☐ including changes required by the attached Examiner's Amendment / Comment or in the Office action of Paper No./Mail Date _____.

   Identifying indicia such as the application number (see 37 CFR 1.84(c)) should be written on the drawings in the front (not the back) of each sheet. Replacement sheet(s) should be labeled as such in the header according to 37 CFR 1.121(d).
6. ☐ DEPOSIT OF and/or INFORMATION about the deposit of BIOLOGICAL MATERIAL must be submitted. Note the attached Examiner's comment regarding REQUIREMENT FOR THE DEPOSIT OF BIOLOGICAL MATERIAL.

Attachment(s)

1. ☒ Notice of References Cited (PTO-892)
2. ☒ Information Disclosure Statements (PTO/SB/08), Paper No./Mail Date 10/22/2014
3. ☐ Examiner's Comment Regarding Requirement for Deposit of Biological Material
4. ☐ Interview Summary (PTO-413), Paper No./Mail Date _____ .
5. ☐ Examiner's Amendment/Comment
6. ☒ Examiner's Statement of Reasons for Allowance
7. ☐ Other _____.

/JASON C SMITH/
Primary Examiner, Art Unit 3617

WABTEC EX1023

1. The present application, filed on or after March 16, 2013, is being examined under the first inventor to file provisions of the AIA.

REASONS FOR ALLOWANCE

2. The following is an examiner's statement of reasons for allowance: the block placing part to place a block on one or more specified track sections to permit a railway field worker to enter the track sections while blocking railway traffic to said track sections; a code generation part to generate a removal code, retrieve the electronic contact address of the railway field worker from the rail personnel contact database, and transmit the removal code to the electronic contact address of the railway field worker; and a block removal part to remove only upon entry of the removal code, the block placed by the block placing part on said one or more track sections, is seen as an unobvious improvement over the art of record.

Any comments considered necessary by applicant must be submitted no later than the payment of the issue fee and, to avoid processing delays, should preferably accompany the issue fee. Such submissions should be clearly labeled "Comments on Statement of Reasons for Allowance."

Any inquiry concerning this communication or earlier communications from the examiner should be directed to JASON C. SMITH whose telephone number is (571)270-5225. The examiner can normally be reached on M- F, 7:30 AM - 5:00 PM.

If attempts to reach the examiner by telephone are unsuccessful, the examiner's supervisor, Joseph Morano can be reached on (571) 272-6684. The fax phone number for the organization where this application or proceeding is assigned is 571-273-8300.

Information regarding the status of an application may be obtained from the Patent Application Information Retrieval (PAIR) system. Status information for published applications may be obtained from either Private PAIR or Public PAIR. Status information for unpublished applications is available through Private PAIR only. For more information about the PAIR system, see http://pair-direct.uspto.gov. Should you have questions on access to the Private PAIR system, contact the Electronic Business Center (EBC) at 866-217-9197 (toll-free). If you would like assistance from a USPTO Customer Service Representative or access to the automated information system, call 800-786-9199 (IN USA OR CANADA) or 571-272-1000.

/JASON C SMITH/
Primary Examiner, Art Unit 3617

Notice of References Cited	Application/Control No. 14/519,727	Applicant(s)/Patent Under Reexamination PIRTLE, ROSS	
	Examiner JASON C. SMITH	Art Unit 3617	Page 1 of 3

U.S. PATENT DOCUMENTS

*		Document Number Country Code-Number-Kind Code	Date MM-YYYY	Name	CPC Classification	US Classification
*	A	US-5,390,880 A	02-1995	Fukawa; Tatsuya	B61L27/0027	246/167R
*	B	US-5,727,758 A	03-1998	Penza; George Gregory	B61L23/06	246/124
*	C	US-5,924,653 A	07-1999	Pedersen; Heine Ewi	B61L3/121	246/14
*	D	US-6,113,037 A	09-2000	Pace; Joseph A.	B61L23/06	246/124
*	E	US-6,145,792 A	11-2000	Penza; George Gregory	B61L23/06	246/122R
*	F	US-2007/0055743 A1	03-2007	Pirtle; Ross Murray	H04L63/08	709/217
*	G	US-2007/0176054 A1	08-2007	Mally; Alain	B61L23/06	246/15
*	H	US-7,624,952 B1	12-2009	Bartek; Peter M.	B61L23/06	246/124
*	I	US-2011/0006912 A1	01-2011	Sheardown; Keith Burton	B61L23/06	340/901
*	J	US-2011/0037619 A1	02-2011	Ginsberg; Matthew L.	G08G1/095	340/910
*	K	US-2011/0238242 A1	09-2011	NICHTER; KEVIN CHRISTOPHER	B61L27/0005	701/19
*	L	US-2011/0226910 A1	09-2011	Bock; Ulrich	B61L23/06	246/167A
*	M	US-2011/0278401 A1	11-2011	Sheardown; Keith Burton	B61L23/06	246/167A

FOREIGN PATENT DOCUMENTS

*		Document Number Country Code-Number-Kind Code	Date MM-YYYY	Country	Name	CPC Classification
	N					
	O					
	P					
	Q					
	R					
	S					
	T					

NON-PATENT DOCUMENTS

*		Include as applicable: Author, Title Date, Publisher, Edition or Volume, Pertinent Pages)
	U	
	V	
	W	
	X	

*A copy of this reference is not being furnished with this Office action. (See MPEP § 707.05(a).)
Dates in MM-YYYY format are publication dates. Classifications may be US or foreign.

WABTEC EX1023

Notice of References Cited	Application/Control No. 14/519,727	Applicant(s)/Patent Under Reexamination PIRTLE, ROSS	
	Examiner JASON C. SMITH	Art Unit 3617	Page 2 of 3

U.S. PATENT DOCUMENTS

*		Document Number Country Code-Number-Kind Code	Date MM-YYYY	Name	CPC Classification	US Classification
*	A	US-8,061,662 B1	11-2011	Bartek; Peter M.	B61L3/04	246/203D
*	B	US-2011/0313596 A1	12-2011	Ecton; Mark	B61L3/127	701/2
*	C	US-2012/0176217 A1	07-2012	TAMARIBUCHI; Hiroyuki	B61L23/06	340/5.7
*	D	US-2013/0135109 A1	05-2013	Sharon; Hamolsky Lee	G08B21/02	340/576
*	E	US-2013/0166114 A1	06-2013	Baines; Stephen	B61L23/06	701/20
*	F	US-2013/0168503 A1	07-2013	Cooper; Jared Klineman	B61L15/0027	246/167R
*	G	US-2013/0187010 A1	07-2013	KIM; Jae Wook	B61L3/221	246/33
*	H	US-8,478,463 B2	07-2013	Knott; Jeffrey G.	B61L3/221	246/167R
*	I	US-2013/0201316 A1	08-2013	BINDER; Yehuda	H04L67/12	348/77
*	J	US-2013/0234774 A1	09-2013	Huang; Lei	H03L5/00	327/333
*	K	US-2013/0304286 A1	11-2013	Ehrler; Eric	B61L23/06	701/19
*	L	US-2014/0104081 A1	04-2014	Cross; Brad	G08G9/00	340/989
*	M	US-2014/0346286 A1	11-2014	Tonguz; Ozan K.	B61L15/0027	246/182R

FOREIGN PATENT DOCUMENTS

*		Document Number Country Code-Number-Kind Code	Date MM-YYYY	Country	Name	Classification
	N					
	O					
	P					
	Q					
	R					
	S					
	T					

NON-PATENT DOCUMENTS

*		Include as applicable: Author, Title Date, Publisher, Edition or Volume, Pertinent Pages)
	U	
	V	
	W	
	X	

*A copy of this reference is not being furnished with this Office action. (See MPEP § 707.05(a).)
Dates in MM-YYYY format are publication dates. Classifications may be US or foreign.

WABTEC EX1023

Notice of References Cited	Application/Control No. 14/519,727	Applicant(s)/Patent Under Reexamination PIRTLE, ROSS	
	Examiner JASON C. SMITH	Art Unit 3617	Page 3 of 3

U.S. PATENT DOCUMENTS

*		Document Number Country Code-Number-Kind Code	Date MM-YYYY	Name	CPC Classification	US Classification
*	A	US-2015/0108284 A1	04-2015	Pirtle; Ross	B61L27/00	246/4
*	B	US-2015/0367873 A1	12-2015	IBENDORF; HENDRIK	F16P3/147	246/167R
*	C	US-2016/0035507 A1	02-2016	BRABAND; JENS	B61L23/06	307/326
	D	US-				
	E	US-				
	F	US-				
	G	US-				
	H	US-				
	I	US-				
	J	US-				
	K	US-				
	L	US-				
	M	US-				

FOREIGN PATENT DOCUMENTS

*		Document Number Country Code-Number-Kind Code	Date MM-YYYY	Country	Name	Classification
	N					
	O					
	P					
	Q					
	R					
	S					
	T					

NON-PATENT DOCUMENTS

*		Include as applicable: Author, Title Date, Publisher, Edition or Volume, Pertinent Pages)
	U	
	V	
	W	
	X	

*A copy of this reference is not being furnished with this Office action. (See MPEP § 707.05(a).)
Dates in MM-YYYY format are publication dates. Classifications may be US or foreign.

WABTEC EX1023

Dkt. 7552/85663

IN THE UNITED STATES PATENT AND TRADEMARK OFFICE

Application of: Ross PIRTLE

Application No.: 14/519,727

Filing Date: October 21, 2014

For: TOOLS FOR RAILWAY TRAFFIC CONTROL

Confirmation No.: 7580

This correspondence is being filed electronically with the U.S. Patent and Trademark Office via EFS-Web.

Smith Piyanan October 22, 2014
Smith Piyanan Date

30 Rockefeller Center, 20th Floor
New York, New York 10112
Tel.: (212) 278-0400

Commissioner for Patents
P.O. Box 1450
Alexandria, VA 22313-1450

INFORMATION DISCLOSURE STATEMENT

Sir:

In order to ensure compliance with the applicant's duty of disclosure under 37 C.F.R. §1.56 and §1.97(a)-(d), Applicant hereby submits this Information Disclosure Statement.

This Information Disclosure Statement is being filed pursuant to 37 C.F.R. § 1.97(b)(1), within three months after the October 21, 2014 filing date of this application.

It is respectfully requested that the information cited in the annexed Form PTO-1449 be considered by the Examiner in connection with the above-identified patent application, and that such art be made of record in said application.

Pursuant to 37 C.F.R. §1.98, copies are submitted herewith for only references listed on the annexed Form PTO-1449 that are not a U.S. patent or U.S. patent application publication.

The Patent Office is hereby authorized to charge any fees that are required for consideration of this Information Disclosure Statement, and to credit any overpayment, to our

WABTEC EX1023

Deposit Account No. 03-3125.

Respectfully submitted,

PAUL TENG, Reg. No. 40,837
Attorney for Applicant
COOPER & DUNHAM LLP
30 Rockefeller Center, 20th Floor
New York, New York 10112
Tel. (212) 278-0400

WABTEC EX1023

ALL REFERENCES CONSIDERED EXCEPT WHERE LINED THROUGH. /JCS/

Submitted by: Paul Teng, Reg. No. 40,837

Form PTO-1449	U.S. Department of Commerce Patent and Trademark Office	Application No. 14/519,727	Filing Date October 21, 2014
INFORMATION DISCLOSURE STATEMENT BY APPLICANT (Use as many sheets as necessary)		First Named Inventor: Ross PIRTLE	
		Art Unit:	
		Examiner Name:	
		Atty. Docket No.: 7552/85663	

U.S. PATENT DOCUMENTS

Examiner Initials*	Cite No.	Document Number (Number-Kind Code (if known))	Publication Date MM-DD-YYYY	Name of Patentee or Applicant of Cited Document	Relevant Pages, Lines, etc.
		5 3 9 0 8 8 0	02-21-1995	Fukawa et al.	
		5 9 2 4 6 5 3	07-20-1999	Pederson et al.	
		20 07 /0 05 57 43 A1	03-08-2007	Pirtle et al.	
		20 07 /0 17 60 54 A1	08-02-2007	Mally	
		20 11 /0 03 76 19 A1	02-17-2011	Ginsberg et al.	
		20 11 /0 23 82 42 A1	09-29-2011	NICHTER	
		20 11 /0 31 35 96 A1	12-22-2011	Ecton et al.	
		20 13 /0 13 51 09 A1	05-30-2013	Sharon	
		8 4 7 8 4 6 3	07-02-2013	Knott et al.	
		20 13 /0 16 85 03 A1	07-04-2013	Cooper et al.	
		20 13 /0 18 70 10 A1	07-25-2013	KIM	
		20 13 /0 20 13 16 A1	08-08-2013	BINDER et al.	
		20 13 /0 23 47 74 A1	09-12-2013	Huang	

FOREIGN PATENT DOCUMENTS

Examiner Initials*	Cite No.	Foreign Patent Document (Country Code, Number, Kind Code (if known))	Publication Date MM-DD-YYYY	Name of Patentee or Applicant of Cited Document	Relevant Pages, Lines, etc.	Translation
		EP 1 0 8 3 6 3	05-16-1984	Kawasaki Jukogyo Kabushiki Kaisha		

NON PATENT LITERATURE DOCUMENTS

Examiner Initials*	Cite No.	Include name of the author (in CAPITAL LETTERS), title of the article, title of the item (book, magazine, symposium, etc.), date, page(s), volume-issue number(s), publisher, city and/or country where published.
		J.B. CALVERT, "Centralized Traffic Control", May 29, 1999
		FRANK W. BRYAN, "Railroad's traffic control systems", May 1, 2006

EXAMINER	DATE CONSIDERED
/Jason C Smith/	02/23/2016

*EXAMINER: Initial if citation considered, whether or not citation is in conformance with MPEP 609: Draw line through citation if not in conformance and not considered. Include copy of this form with next communication to applicant.

WABTEC EX1023

ALL REFERENCES CONSIDERED EXCEPT WHERE LINED THROUGH. /JCS/

Submitted by: Paul Teng, Reg. No. 40,837

Form PTO-1449	U.S. Department of Commerce Patent and Trademark Office	Application No. 14/519,727	Filing Date October 21, 2014
INFORMATION DISCLOSURE STATEMENT BY APPLICANT (Use as many sheets as necessary)		First Named Inventor: Ross PIRTLE	
		Art Unit:	
		Examiner Name:	
		Atty. Docket No.: 7552/85663	

U.S. PATENT DOCUMENTS

Examiner Initials*	Cite No.	Document Number Number-Kind Code (if known)	Publication Date MM-DD-YYYY	Name of Patentee or Applicant of Cited Document	Relevant Pages, Lines, etc.

FOREIGN PATENT DOCUMENTS

Examiner Initials*	Cite No.	Foreign Patent Document Country Code, Number, Kind Code (if known)	Publication Date MM-DD-YYYY	Name of Patentee or Applicant of Cited Document	Relevant Pages, Lines, etc.	Translation

NON PATENT LITERATURE DOCUMENTS

Examiner Initials*	Cite No.	Include name of the author (in CAPITAL LETTERS), title of the article, title of the item (book, magazine, symposium, etc.), date, page(s), volume-issue number(s), publisher, city and/or country where published.
		KYLE MCINNES, "BlackBerry-Based WIC Pager Pilot Program at Children's Hospital", July 21, 2010
		JAI C.S., "Healthcare Communication Interface: WIC Pager, Philips Emergin", October 8, 2010
		"Fatal Accidents Involving Roadway Workers-In-Charge and Lone Workers", March 9, 2012, Fatality Analysis of Maintenance-of-way Employees and Signalmen (FAMES) Committee
		"Introduction to the FAMES Committee", May 21, 2012, Fatality Analysis of Maintenance-of-way Employees and Signalmen (FAMES) Committee
		CASEYJONZ et al., "Centralized traffic control", July 13, 2013, Wikipedia
		AARON-TRIPEL et al., "Train dispatcher", August 23, 2013, Wikipedia
		MASAKI KATAHIRA et al., "Recent Train Traffic Control Systems", Hitachi, Ltd.
		"SCC Centralized traffic control system for lines and area junctions", Ansaldo STS

EXAMINER	DATE CONSIDERED
/Jason C Smith/	02/23/2016

***EXAMINER:** Initial if citation considered, whether or not citation is in conformance with MPEP 609: Draw line through citation if not in conformance and not considered. Include copy of this form with next communication to applicant.

WABTEC EX1023

ALL REFERENCES CONSIDERED EXCEPT WHERE LINED THROUGH. /JCS/

UNITED STATES PATENT AND TRADEMARK OFFICE

UNITED STATES DEPARTMENT OF COMMERCE
United States Patent and Trademark Office
Address: COMMISSIONER FOR PATENTS
P.O. Box 1450
Alexandria, Virginia 22313-1450
www.uspto.gov

BIB DATA SHEET

CONFIRMATION NO. 7580

SERIAL NUMBER	FILING or 371(c) DATE	CLASS	GROUP ART UNIT	ATTORNEY DOCKET NO.
14/519,727	10/21/2014 RULE	246	3617	7552/85663

APPLICANTS

INVENTORS

Ross Pirtle, Commack, NY;

**** CONTINUING DATA ***************************

This appln claims benefit of 61/893,547 10/21/2013

**** FOREIGN APPLICATIONS ***************************

**** IF REQUIRED, FOREIGN FILING LICENSE GRANTED ****

10/28/2014

		STATE OR COUNTRY	SHEETS DRAWINGS	TOTAL CLAIMS	INDEPENDENT CLAIMS
Foreign Priority claimed ☐ Yes ☑ No 35 USC 119(a-d) conditions met ☐ Yes ☑ No Verified and Acknowledged /JASON C SMITH/ Examiner's Signature	☐ Met after Allowance Initials	NY	11	19	3

ADDRESS

COOPER & DUNHAM, LLP
30 Rockefeller Plaza
20th Floor
NEW YORK, NY 10112
UNITED STATES

TITLE

TOOLS FOR RAILWAY TRAFFIC CONTROL

FILING FEE RECEIVED 1600	FEES: Authority has been given in Paper No._____ to charge/credit DEPOSIT ACCOUNT No._____ for following:	☐ All Fees ☐ 1.16 Fees (Filing) ☐ 1.17 Fees (Processing Ext. of time) ☐ 1.18 Fees (Issue) ☐ Other _____ ☐ Credit

WABTEC EX1023

Issue Classification	Application/Control No.	Applicant(s)/Patent Under Reexamination
	14519727	PIRTLE, ROSS
	Examiner	**Art Unit**
	JASON C SMITH	3617

CPC						
Symbol					**Type**	**Version**
B61L		23	/	06	F	2013-01-01
B61L		27	/	00	I	2013-01-01
			/			
			/			
			/			
			/			
			/			
			/			
			/			
			/			
			/			
			/			
			/			
			/			
			/			

CPC Combination Sets								
Symbol					**Type**	**Set**	**Ranking**	**Version**
			/					
			/					

NONE (Assistant Examiner)	(Date)	**Total Claims Allowed:** 19	
/JASON C SMITH/ Primary Examiner.Art Unit 3617 (Primary Examiner)	02/23/2016 (Date)	O.G. Print Claim(s) 1	O.G. Print Figure 1

Issue Classification	Application/Control No.	Applicant(s)/Patent Under Reexamination
	14519727	PIRTLE, ROSS
	Examiner	**Art Unit**
	JASON C SMITH	3617

US ORIGINAL CLASSIFICATION		INTERNATIONAL CLASSIFICATION	
CLASS	SUBCLASS	CLAIMED	NON-CLAIMED
		B 6 1 L 23 / 06 (2006.01.01)	

CROSS REFERENCE(S)

CLASS	SUBCLASS (ONE SUBCLASS PER BLOCK)				

NONE (Assistant Examiner)	(Date)	**Total Claims Allowed:** 19	
/JASON C SMITH/ Primary Examiner.Art Unit 3617 (Primary Examiner)	02/23/2016 (Date)	O.G. Print Claim(s) 1	O.G. Print Figure 1

WABTEC EX1023

Issue Classification	Application/Control No.	Applicant(s)/Patent Under Reexamination
	14519727	PIRTLE, ROSS
	Examiner	**Art Unit**
	JASON C SMITH	3617

☒ **Claims renumbered in the same order as presented by applicant** ☐ **CPA** ☐ **T.D.** ☐ **R.1.47**

Final	Original	Final	Original	Final	Original	Final	Original	Final	Original	Final	Original	Final	Original	Final	Original
	1		17												
	2		18												
	3		19												
	4														
	5														
	6														
	7														
	8														
	9														
	10														
	11														
	12														
	13														
	14														
	15														
	16														

NONE (Assistant Examiner)	(Date)	**Total Claims Allowed:** 19	
/JASON C SMITH/ Primary Examiner.Art Unit 3617 (Primary Examiner)	02/23/2016 (Date)	O.G. Print Claim(s) 1	O.G. Print Figure 1

WABTEC EX1023

Search Notes	Application/Control No.	Applicant(s)/Patent Under Reexamination
	14519727	PIRTLE, ROSS
	Examiner	**Art Unit**
	JASON C SMITH	3617

CPC- SEARCHED

Symbol	Date	Examiner
B61L 23/06, 16, 27/00	2/23/2016	jcs

CPC COMBINATION SETS - SEARCHED

Symbol	Date	Examiner

US CLASSIFICATION SEARCHED

Class	Subclass	Date	Examiner
246	3, 4, 124, 122r, 167r	2/23/2016	jcs

SEARCH NOTES

Search Notes	Date	Examiner
east text search	2/23/2016	jcs

INTERFERENCE SEARCH

US Class/ CPC Symbol	US Subclass / CPC Group	Date	Examiner
B61L	23/06, 16, 27/00	2/23/2016	jcs

	/JASON C SMITH/ Primary Examiner.Art Unit 3617

WABTEC EX1023

EAST Search History

EAST Search History (Prior Art)

Ref #	Hits	Search Query	DBs	Default Operator	Plurals	Time Stamp
L1	1	"14519727"	US-PGPUB; USPAT; USOCR	OR	OFF	2016/02/23 21:30
L2	13	("20070055743" | "20070176054" | "20110037619" | "20110238242" | "20110313596" | "20130135109" | "20130168503" | "20130187010" | "20130201316" | "20130234774" | "5390880" | "5924653" | "8478463").PN.	US-PGPUB; USPAT; USOCR	OR	OFF	2016/02/23 21:30
L3	80	b61l23/06.cpc.	US-PGPUB; USPAT; USOCR	OR	OFF	2016/02/23 21:32
L4	7	("20030025589" | "20070073457" | "20090140856" | "20100013227" | "5705991" | "5942985" | "8548391").PN. OR ("9187105").URPN.	US-PGPUB; USPAT; USOCR	OR	OFF	2016/02/23 21:37
L5	6	("20110006912" | "5727758" | "6113037" | "6145792" | "7624952" | "8344877").PN. OR ("8786428").URPN.	US-PGPUB; USPAT; USOCR	OR	OFF	2016/02/23 21:37
L6	7	246/124.ccls. and worker$2 and block	US-PGPUB; USPAT; USOCR	OR	OFF	2016/02/23 21:38
L7	2	246/124.ccls. and worker$2 same block	US-PGPUB; USPAT; USOCR	OR	OFF	2016/02/23 21:38
L8	352	246/124.ccls.	US-PGPUB; USPAT; USOCR	OR	OFF	2016/02/23 21:40
L9	1	246/124.ccls. and worker$2 and code	US-PGPUB; USPAT; USOCR	OR	OFF	2016/02/23 21:40
L10	49	246/$.ccls. and worker$2 and code	US-PGPUB; USPAT; USOCR	OR	OFF	2016/02/23 21:40
L11	875	246/122r.ccls.	US-PGPUB; USPAT; USOCR	OR	OFF	2016/02/23 21:41
L12	508	246/167r.ccls.	US-PGPUB; USPAT;	OR	OFF	2016/02/23 21:41

WABTEC EX1023

			USOCR			
L13	112	b61l27/00.cpc.	US-PGPUB; USPAT; USOCR	OR	OFF	2016/02/23 21:41
L14	16	b61l23/16.cpc.	US-PGPUB; USPAT; USOCR	OR	OFF	2016/02/23 21:42
L15	1641	246/3.ccls.	US-PGPUB; USPAT; USOCR	OR	OFF	2016/02/23 21:42
L16	193	246/4.ccls.	US-PGPUB; USPAT; USOCR	OR	OFF	2016/02/23 21:42
L17	2	pirtle adj ross.in.	US-PGPUB; USPAT; USOCR	OR	OFF	2016/02/23 21:42

2/23/2016 9:43:08 PM
C:\Users\jsmith8\Documents\EAST\Workspaces\14519727.wsp

WABTEC EX1023

Dkt. 7552/85663

IN THE UNITED STATES PATENT AND TRADEMARK OFFICE

Application of: Ross Pirtle

Application No.: 14/519,727 Art Unit: 3617

Filing Date: October 21, 2014 Examiner: Jason Smith

For: TOOLS FOR RAILWAY TRAFFIC CONTROL

Confirmation No.: 7580 Class-Subclass: 246-003000

Issue Fee Due Date: June 3, 2016

This correspondence is being transmitted by facsimile transmission and/or EFS-Web to the U.S. Patent and Trademark Office.

May 31, 2016

Paul Teng Date
Reg. No. 40,837

30 Rockefeller Plaza, 20th Floor
New York, New York 10112
Tel.: (212) 278-0400

Commissioner for Patents
P.O. Box 1450
Alexandria, VA 22313-1450

AMENDMENT UNDER 37 C.F.R. §1.312

Sir:

This Amendment is submitted pursuant to 37 C.F.R. §1.312 in order to amend the specification. Payment of the issue fee has not yet been submitted.

Amendments to the Specification begin on page 2 of this paper.

Remarks begin on page 6 of this paper.

Amendments to the Specification

Please amend the paragraph at page 6, line 22, through page 8, line 12, in the following manner:

In another aspect, the adaptation includes a block removal user interface to permit a user to enter the removal code to cause the block removal part to remove the block on said one or more track sections. Such block removal user interface may be provided in any of various ways. For example, the block removal user interface may be provided within a mobile application or web page through which the railway field worker can enter the removal code manually or orally (i.e. including a voice or speech interface part). As another example, the removal code may be embedded in a link in a message transmitted by email or messaging to the electronic contact address of the railway field worker, and the railway field worker can simply cause the removal code to be entered by activating the link in the message received by the railway field worker. In another example, the block removal user interface may be ~~provide~~ provided on the same user terminal on which the block placing part is disposed. Further, a voice or speech interface part may be disposed on the system-side to process a voice message (such as received via a telephone call from the railway field worker), extract the removal code from the voice message, and enter the block removal code. In each instance, the block of railway traffic to the specified track sections remains in place in the centralized railway control system until the entry of the removal code through the block removal user interface. Further, entry of the removal code may also require entry of identification of the user entering the removal code, and removal of the block may also require not only the removal code but also confirmation that the user entering the removal code is authorized to remove the block. The block removal user interface may further require, in addition to entry of the removal code, the user to specify that confirmation that the track sections have been cleared has been obtained from the railway field worker associated with the block, before the block removal user interface permits the removal code to be transmitted to the block removal part.

Please amend the paragraph at page 11, lines 10-19, in the following manner:

The drawings show examples of implementations of the subject matter of this patent disclosure in several computing environments. However, it should be understood that the subject matter of this disclosure can be utilized by any computing device including but not limited to PDAs, cell phones, personal, notebook and workstation computers, kiosks, other information terminals, WIC (or another) pager, etc. In addition, the subject matter of this disclosure might be provided as services in a modular fashion by other devices connected by a communication network.

Please amend the paragraph at page 12, lines 3-13, in the following manner:

Fig. 1A [[show]] shows schematically an exemplary embodiment in which a system 100A includes a railway traffic control terminal 105, [[a]] rail personnel data 104 and a terminal 103, each connected to the network 102. **Fig. 1B** shows schematically another exemplary embodiment, in which rail personnel contact data 104 is accessed directly by the railway traffic control apparatus 105. While only one terminal is connected to the network 102 in the example shown in **Fig. 1A** as well as in the example shown in **Fig. 1B**, it should be appreciated that the network environment can have an arbitrary number of devices (of various [[type]] types).

Please amend the paragraph at page 13, lines 9-17, in the following manner:

The rail personnel 104 is a database that can be either connected to or inside the railway traffic control terminal 105. The rail personnel contact data 104 stores information regarding the maintenance workers used for traveling, inspecting and working on blocked rails. For example, the information stored can include [[be]] name of the maintenance worker, primary contact, secondary contact, previous assignment,

current assignment, etc. as shown via user interface display in **Fig. 11**.

Please amend the paragraphs at page 15, lines 1-13, in the following manner:

The code generator 101B is configured to produce a removal or release code, such as a ~~random~~ cipher which is random, pseudo-random, secret, etc., and stored on the terminal. A new random cipher may be generated for each instance of traffic blocking. This ~~random cipher~~ removal or release code is then sent to another terminal belonging to the railway personnel who are scheduled to travel, inspect or work on the specific rails being blocked.

The block remover 101C is programmed to remove the previous block, or plurality of blocks set by the block placer 101A. The block remover 101C is dependent on the code produced by the code generator 101B. As described in detail below, a block cannot be removed [[with]] without the input of the removal or release code.

Please amend the paragraph bridging pages 23 and 24, in the following manner:

Fig. 10 shows an exemplary illustration of a message sent by the railway traffic control terminal 105 to a terminal 103 ~~belonging to~~ at a corresponding address of a maintenance worker assigned to work on a blocked track. The message is meant to deliver the release code to the maintenance worker assigned to work on a blocked track. In addition to relaying the code, the message may include, but not limited to, information regarding the section of track that is being blocked, the date and time that the track was blocked, who initiated the track block, and [[also]] links to quickly respond to the message. By selecting one of the links embedded in the message, the terminal 103 sends the release code to the railway traffic control terminal 105. The code can be transmitted through, but not limited to, text message, e-mail or voice message. In the present embodiment being illustrated, the terminal 103 is depicted as a mobile phone. The terminal 103 could be any communication device such as, but not limited to, mobile

phone or smartphone, tablet, WIC (or another) pager, PDA, etc.

Please amend the paragraphs at page 27, line 14, through page 28, line 22, in the following manner:

Fig. 13 describes a method for removing a block placed on a section of track. In S1301, the railway traffic controller selects an existing block by using either the network rail map, shown in **Fig. 5**, the remove tool, shown in **Figs. 6, 8 and 9**, or the summary table, shown in **Fig. 7**. The remove button is disabled without the input of the secret code from either the maintenance worker [[of]] or the railway traffic control terminal 105 (S1302). In S1304 [[S1303]], the railway traffic control terminal 105 checks if there is a maintenance worker that is eligible to transmit the random secret code. If there is an eligible maintenance worker available (S1304, YES), the maintenance worker transmits the random secret code to the railway traffic control center 105 (S1305 [[S13043]]). If there is no maintenance worker available to transmit the random secret code (S1304, NO), the code can be retrieved from the train traffic control terminal 105 by the train traffic controller (S1306 [[S1305]]).

Once the secret code is received, the secret code may be input to the designated field in S1308 [[S1306]]. The railway traffic control terminal 105 checks the secret code with the code saved in its memory in S1309 [[S1307]]. If the code is incorrect (S1309, NO), the railway traffic control terminal 105 will prompt the user to input the code again (S1308). If the code is correct (S1309, YES), the railway traffic control terminal will prompt the user to enter information into any remaining fields in S1310 [[S1308]]. In S1311 [[S1309]], the railway traffic control terminal 105 checks that all information input into all fields is correct and that all fields are filled in. After this check is performed by the railway traffic control terminal 105, the remove button is enabled on the form S1312 [[(S1310)]] and the railway traffic controller may remove the block on the corresponding track section.

REMARKS

By this Amendment, the specification has been amended to address various formal issues.

Applicant submits that such amendment does not introduce new matter and does not substantially change the application. Accordingly, Applicant respectfully requests entry of the amendment.

Respectfully submitted,

Paul Teng, Reg. No. 40,837
Attorney for Applicant
COOPER & DUNHAM LLP
30 Rockefeller Plaza, 20th Floor
New York, New York 10112
Tel.: (212) 278-0400

Electronic Acknowledgement Receipt

EFS ID:	25929867
Application Number:	14519727
International Application Number:	
Confirmation Number:	7580
Title of Invention:	TOOLS FOR RAILWAY TRAFFIC CONTROL
First Named Inventor/Applicant Name:	Ross Pirtle
Customer Number:	23432
Filer:	Paul Teng
Filer Authorized By:	
Attorney Docket Number:	7552/85663
Receipt Date:	31-MAY-2016
Filing Date:	21-OCT-2014
Time Stamp:	19:06:28
Application Type:	Utility under 35 USC 111(a)

Payment information:

Submitted with Payment	no

File Listing:

Document Number	Document Description	File Name	File Size(Bytes)/ Message Digest	Multi Part /.zip	Pages (if appl.)
1	Amendment after Notice of Allowance (Rule 312)	85663--Rule312Amendment.PDF	220601 24994e4016bb6426333829ec27a8c23f0089b657	no	6

Warnings:

Information:

WABTEC EX1023

Total Files Size (in bytes):	220601

This Acknowledgement Receipt evidences receipt on the noted date by the USPTO of the indicated documents, characterized by the applicant, and including page counts, where applicable. It serves as evidence of receipt similar to a Post Card, as described in MPEP 503.

New Applications Under 35 U.S.C. 111

If a new application is being filed and the application includes the necessary components for a filing date (see 37 CFR 1.53(b)-(d) and MPEP 506), a Filing Receipt (37 CFR 1.54) will be issued in due course and the date shown on this Acknowledgement Receipt will establish the filing date of the application.

National Stage of an International Application under 35 U.S.C. 371

If a timely submission to enter the national stage of an international application is compliant with the conditions of 35 U.S.C. 371 and other applicable requirements a Form PCT/DO/EO/903 indicating acceptance of the application as a national stage submission under 35 U.S.C. 371 will be issued in addition to the Filing Receipt, in due course.

New International Application Filed with the USPTO as a Receiving Office

If a new international application is being filed and the international application includes the necessary components for an international filing date (see PCT Article 11 and MPEP 1810), a Notification of the International Application Number and of the International Filing Date (Form PCT/RO/105) will be issued in due course, subject to prescriptions concerning national security, and the date shown on this Acknowledgement Receipt will establish the international filing date of the application.

PART B - FEE(S) TRANSMITTAL

Complete and send this form, together with applicable fee(s), to: Mail **Mail Stop ISSUE FEE**
Commissioner for Patents
P.O. Box 1450
Alexandria, Virginia 22313-1450
or Fax (571)-273-2885

INSTRUCTIONS: This form should be used for transmitting the ISSUE FEE and PUBLICATION FEE (if required). Blocks 1 through 5 should be completed where appropriate. All further correspondence including the Patent, advance orders and notification of maintenance fees will be mailed to the current correspondence address as indicated unless corrected below or directed otherwise in Block 1, by (a) specifying a new correspondence address; and/or (b) indicating a separate "FEE ADDRESS" for maintenance fee notifications.

CURRENT CORRESPONDENCE ADDRESS (Note: Use Block 1 for any change of address)

23432 7590 03/03/2016
COOPER & DUNHAM, LLP
30 Rockefeller Plaza
20th Floor
NEW YORK, NY 10112

Note: A certificate of mailing can only be used for domestic mailings of the Fee(s) Transmittal. This certificate cannot be used for any other accompanying papers. Each additional paper, such as an assignment or formal drawing, must have its own certificate of mailing or transmission.

Certificate of Mailing or Transmission
I hereby certify that this Fee(s) Transmittal is being deposited with the United States Postal Service with sufficient postage for first class mail in an envelope addressed to the Mail Stop ISSUE FEE address above, or being facsimile transmitted to the USPTO (571) 273-2885, on the date indicated below.

(Depositor's name)
(Signature)
(Date)

APPLICATION NO.	FILING DATE	FIRST NAMED INVENTOR	ATTORNEY DOCKET NO.	CONFIRMATION NO.
14/519,727	10/21/2014	Ross Pirtle	7552/85663	7580

TITLE OF INVENTION: TOOLS FOR RAILWAY TRAFFIC CONTROL

APPLN. TYPE	ENTITY STATUS	ISSUE FEE DUE	PUBLICATION FEE DUE	PREV. PAID ISSUE FEE	TOTAL FEE(S) DUE	DATE DUE
nonprovisional	UNDISCOUNTED	$960	$0	$0	$960	06/03/2016

EXAMINER	ART UNIT	CLASS-SUBCLASS
SMITH, JASON C	3617	246-003000

1. Change of correspondence address or indication of "Fee Address" (37 CFR 1.363).
- ☐ Change of correspondence address (or Change of Correspondence Address form PTO/SB/122) attached.
- ☐ "Fee Address" indication (or "Fee Address" Indication form PTO/SB/47; Rev 03-02 or more recent) attached. **Use of a Customer Number is required.**

2. For printing on the patent front page, list
(1) The names of up to 3 registered patent attorneys or agents OR, alternatively,
(2) The name of a single firm (having as a member a registered attorney or agent) and the names of up to 2 registered patent attorneys or agents. If no name is listed, no name will be printed.

1 COOPER & DUNHAM LLP
2
3

3. ASSIGNEE NAME AND RESIDENCE DATA TO BE PRINTED ON THE PATENT (print or type)

PLEASE NOTE: Unless an assignee is identified below, no assignee data will appear on the patent. If an assignee is identified below, the document has been filed for recordation as set forth in 37 CFR 3.11. Completion of this form is NOT a substitute for filing an assignment.

(A) NAME OF ASSIGNEE
RAILWARE, INC.

(B) RESIDENCE: (CITY and STATE OR COUNTRY)
Hauppauge, New York

Please check the appropriate assignee category or categories (will not be printed on the patent): ☐ Individual ☒ Corporation or other private group entity ☐ Government

4a. The following fee(s) are submitted:
- ☒ Issue Fee
- ☒ Publication Fee (No small entity discount permitted)
- ☒ Advance Order - # of Copies (3)

4b. Payment of Fee(s): **(Please first reapply any previously paid issue fee shown above)**
- ☐ A check is enclosed.
- ☐ Payment by credit card. Form PTO-2038 is attached.
- ☒ The director is hereby authorized to charge the required fee(s), any deficiency, or credits any overpayment, to Deposit Account Number 03-3125 (enclose an extra copy of this form).

5. **Change in Entity Status** (from status indicated above)
- ☐ Applicant certifying micro entity status. See 37 CFR 1.29 — NOTE: Absent a valid certification of Micro Entity Status (see forms PTO/SB/15A and 15B), issue fee payment in the micro entity amount will not be accepted at the risk of application abandonment.
- ☐ Applicant asserting small entity status. See 37 CFR 1.27 — NOTE: If the application was previously under micro entity status, checking this box will be taken to be a notification of loss of entitlement to micro entity status.
- ☐ Applicant changing to regular undiscounted fee status. — NOTE: Checking this box will be taken to be a notification of loss of entitlement to small or micro entity status, as applicable.

NOTE: This form must be signed in accordance with 37 CFR 1.31 and 1.33. See 37 CFR 1.4 for signature requirements and certifications.

Authorized Signature _____ Date June 3, 2016

Typed or printed name Paul Teng Registration No. 40,837

WABTEC EX1023

Dkt. 7552/85663

IN THE UNITED STATES PATENT AND TRADEMARK OFFICE

Application of: Ross Pirtle

Application No.: 14/519,727 Art Unit: 3617

Filing Date: October 21, 2014 Examiner: Jason Smith

For: TOOLS FOR RAILWAY TRAFFIC CONTROL

Confirmation No.: 7580 Class-Subclass: 246-003000

Issue Fee Due Date: June 3, 2016

Mail Stop Issue Fee
Commissioner for Patents
P.O. Box 1450
Alexandria, VA 22313-1450

APPLICANT'S COMMENTS ON
EXAMINER'S STATEMENT OF REASONS FOR ALLOWANCE

Sir:

Applicant appreciates the Examiner's Statement of the Reasons for Allowance attached to the Notice of Allowability dated March 3, 2016 and submits that the allowed claims recite subject matter which further supports patentability for reasons in addition to those identified in the Reasons for Allowance.

Respectfully submitted,

PAUL TENG, Reg.No.40,837
Attorney for Applicant
COOPER & DUNHAM LLP
30 Rockefeller Plaza, 20th Floor
New York, New York 10112
Tel.: (212) 278-0400

This correspondence is being transmitted by facsimile transmission and/or EFS-Web to the U.S. Patent and Trademark Office.

June 3, 2016

Paul Teng
Reg. No. 40,837

Date

Electronic Acknowledgement Receipt

EFS ID:	25961625
Application Number:	14519727
International Application Number:	
Confirmation Number:	7580
Title of Invention:	TOOLS FOR RAILWAY TRAFFIC CONTROL
First Named Inventor/Applicant Name:	Ross Pirtle
Customer Number:	23432
Filer:	Paul Teng
Filer Authorized By:	
Attorney Docket Number:	7552/85663
Receipt Date:	03-JUN-2016
Filing Date:	21-OCT-2014
Time Stamp:	12:36:02
Application Type:	Utility under 35 USC 111(a)

Payment information:

Submitted with Payment	no

File Listing:

Document Number	Document Description	File Name	File Size(Bytes)/ Message Digest	Multi Part /.zip	Pages (if appl.)
1	Issue Fee Payment (PTO-85B)	85663--IssueFee.PDF	115276 f667ad989147eda43efa15d7a91eeba82a565611	no	2

Warnings:

Information:

WABTEC EX1023

Total Files Size (in bytes):	115276

This Acknowledgement Receipt evidences receipt on the noted date by the USPTO of the indicated documents, characterized by the applicant, and including page counts, where applicable. It serves as evidence of receipt similar to a Post Card, as described in MPEP 503.

New Applications Under 35 U.S.C. 111
If a new application is being filed and the application includes the necessary components for a filing date (see 37 CFR 1.53(b)-(d) and MPEP 506), a Filing Receipt (37 CFR 1.54) will be issued in due course and the date shown on this Acknowledgement Receipt will establish the filing date of the application.

National Stage of an International Application under 35 U.S.C. 371
If a timely submission to enter the national stage of an international application is compliant with the conditions of 35 U.S.C. 371 and other applicable requirements a Form PCT/DO/EO/903 indicating acceptance of the application as a national stage submission under 35 U.S.C. 371 will be issued in addition to the Filing Receipt, in due course.

New International Application Filed with the USPTO as a Receiving Office
If a new international application is being filed and the international application includes the necessary components for an international filing date (see PCT Article 11 and MPEP 1810), a Notification of the International Application Number and of the International Filing Date (Form PCT/RO/105) will be issued in due course, subject to prescriptions concerning national security, and the date shown on this Acknowledgement Receipt will establish the international filing date of the application.

OPAP
JUN 03 2016
PATENT & TRADEMARK OFFICE

IFW

PART B - FEE(S) TRANSMITTAL

Complete and send this form, together with applicable fee(s), to: Mail **Mail Stop ISSUE FEE**
Commissioner for Patents
P.O. Box 1450
Alexandria, Virginia 22313-1450
or Fax **(571)-273-2885**

INSTRUCTIONS: This form should be used for transmitting the ISSUE FEE and PUBLICATION FEE (if required). Blocks 1 through 5 should be completed where appropriate. All further correspondence including the Patent, advance orders and notification of maintenance fees will be mailed to the current correspondence address as indicated unless corrected below or directed otherwise in Block 1, by (a) specifying a new correspondence address; and/or (b) indicating a separate "FEE ADDRESS" for maintenance fee notifications.

CURRENT CORRESPONDENCE ADDRESS (Note: Use Block 1 for any change of address)

23432 7590 03/03/2016
COOPER & DUNHAM, LLP
30 Rockefeller Plaza
20th Floor
NEW YORK, NY 10112

06/06/2016 CCHAU2 00000024 033125 14519727

01 FC:1501 960.00 DA
02 FC:8001 9.00 DA

Note: A certificate of mailing can only be used for domestic mailings of the Fee(s) Transmittal. This certificate cannot be used for any other accompanying papers. Each additional paper, such as an assignment or formal drawing, must have its own certificate of mailing or transmission.

Certificate of Mailing or Transmission
I hereby certify that this Fee(s) Transmittal is being deposited with the United States Postal Service with sufficient postage for first class mail in an envelope addressed to the Mail Stop ISSUE FEE address above, or being facsimile transmitted to the USPTO (571) 273-2885, on the date indicated below.

(Depositor's name)
(Signature)
(Date)

APPLICATION NO.	FILING DATE	FIRST NAMED INVENTOR	ATTORNEY DOCKET NO.	CONFIRMATION NO.
14/519,727	10/21/2014	Ross Pirtle	7552/85663	7580

TITLE OF INVENTION: TOOLS FOR RAILWAY TRAFFIC CONTROL

APPLN. TYPE	ENTITY STATUS	ISSUE FEE DUE	PUBLICATION FEE DUE	PREV. PAID ISSUE FEE	TOTAL FEE(S) DUE	DATE DUE
nonprovisional	UNDISCOUNTED	$960	$0	$0	$960	06/03/2016

EXAMINER	ART UNIT	CLASS-SUBCLASS
SMITH, JASON C	3617	246-003000

1. Change of correspondence address or indication of "Fee Address" (37 CFR 1.363).
☐ Change of correspondence address (or Change of Correspondence Address form PTO/SB/122) attached.
☐ "Fee Address" indication (or "Fee Address" Indication form PTO/SB/47; Rev 03-02 or more recent) attached. **Use of a Customer Number is required.**

2. For printing on the patent front page, list
(1) The names of up to 3 registered patent attorneys or agents OR, alternatively,
(2) The name of a single firm (having as a member a registered attorney or agent) and the names of up to 2 registered patent attorneys or agents. If no name is listed, no name will be printed.

1 COOPER & DUNHAM LLP
2
3

3. ASSIGNEE NAME AND RESIDENCE DATA TO BE PRINTED ON THE PATENT (print or type)
PLEASE NOTE: Unless an assignee is identified below, no assignee data will appear on the patent. If an assignee is identified below, the document has been filed for recordation as set forth in 37 CFR 3.11. Completion of this form is NOT a substitute for filing an assignment.

(A) NAME OF ASSIGNEE
RAILWARE, INC.

(B) RESIDENCE: (CITY and STATE OR COUNTRY)
Hauppauge, New York

Please check the appropriate assignee category or categories (will not be printed on the patent): ☐ Individual ☒ Corporation or other private group entity ☐ Government

4a. The following fee(s) are submitted:
☒ Issue Fee
☒ Publication Fee (No small entity discount permitted)
☒ Advance Order - # of Copies (3)

4b. Payment of Fee(s): **(Please first reapply any previously paid issue fee shown above)**
☐ A check is enclosed.
☐ Payment by credit card. Form PTO-2038 is attached.
☒ The director is hereby authorized to charge the required fee(s), any deficiency, or credits any overpayment, to Deposit Account Number 03-3125 (enclose an extra copy of this form).

5. **Change in Entity Status** (from status indicated above)
☐ Applicant certifying micro entity status. See 37 CFR 1.29 — NOTE: Absent a valid certification of Micro Entity Status (see forms PTO/SB/15A and 15B), issue fee payment in the micro entity amount will not be accepted at the risk of application abandonment.
☐ Applicant asserting small entity status. See 37 CFR 1.27 — NOTE: If the application was previously under micro entity status, checking this box will be taken to be a notification of loss of entitlement to micro entity status.
☐ Applicant changing to regular undiscounted fee status. — NOTE: Checking this box will be taken to be a notification of loss of entitlement to small or micro entity status, as applicable.

NOTE: This form must be signed in accordance with 37 CFR 1.31 and 1.33. See 37 CFR 1.4 for signature requirements and certifications.

Authorized Signature [signature] Date June 3, 2016
Typed or printed name Paul Teng Registration No. 40,837

WABTEC EX1023

OK TO ENTER: /JCS/

Dkt. 7552/85663

IN THE UNITED STATES PATENT AND TRADEMARK OFFICE

Application of: Ross Pirtle

Application No.: 14/519,727 Art Unit: 3617

Filing Date: October 21, 2014 Examiner: Jason Smith

For: TOOLS FOR RAILWAY TRAFFIC CONTROL

Confirmation No.: 7580 Class-Subclass: 246-003000

Issue Fee Due Date: June 3, 2016

This correspondence is being transmitted by facsimile transmission and/or EFS-Web to the U.S. Patent and Trademark Office.

May 31, 2016

Paul Teng
Reg. No. 40,837

Date

30 Rockefeller Plaza, 20th Floor
New York, New York 10112
Tel.: (212) 278-0400

Commissioner for Patents
P.O. Box 1450
Alexandria, VA 22313-1450

AMENDMENT UNDER 37 C.F.R. §1.312

Sir:

This Amendment is submitted pursuant to 37 C.F.R. §1.312 in order to amend the specification. Payment of the issue fee has not yet been submitted.

Amendments to the Specification begin on page 2 of this paper.

Remarks begin on page 6 of this paper.

UNITED STATES PATENT AND TRADEMARK OFFICE

UNITED STATES DEPARTMENT OF COMMERCE
United States Patent and Trademark Office
Address: COMMISSIONER FOR PATENTS
P.O. Box 1450
Alexandria, Virginia 22313-1450
www.uspto.gov

APPLICATION NO.	FILING DATE	FIRST NAMED INVENTOR	ATTORNEY DOCKET NO.	CONFIRMATION NO.
14/519,727	10/21/2014	Ross Pirtle	7552/85663	7580

23432 7590 06/08/2016
COOPER & DUNHAM, LLP
30 Rockefeller Plaza
20th Floor
NEW YORK, NY 10112

EXAMINER
SMITH, JASON C

ART UNIT	PAPER NUMBER
3617	

MAIL DATE	DELIVERY MODE
06/08/2016	PAPER

Please find below and/or attached an Office communication concerning this application or proceeding.

The time period for reply, if any, is set in the attached communication.

WABTEC EX1023

Response to Rule 312 Communication	Application No.	Applicant(s)
	14/519,727	PIRTLE, ROSS
	Examiner	**Art Unit**
	JASON C. SMITH	3617

-- The MAILING DATE of this communication appears on the cover sheet with the correspondence address --

1. ☒ The amendment filed on *31 May 2016* under 37 CFR 1.312 has been considered, and has been:

a) ☐ entered.

b) ☒ entered as directed to matters of form not affecting the scope of the invention.

c) ☐ disapproved because the amendment was filed after the payment of the issue fee.
Any amendment filed after the date the issue fee is paid must be accompanied by a petition under 37 CFR 1.313(c)(1) and the required fee to withdraw the application from issue.

d) ☐ disapproved. See explanation below.

e) ☐ entered in part. See explanation below.

/JASON C SMITH/
Primary Examiner, Art Unit 3617

WABTEC EX1023

UNITED STATES PATENT AND TRADEMARK OFFICE

UNITED STATES DEPARTMENT OF COMMERCE
United States Patent and Trademark Office
Address: COMMISSIONER FOR PATENTS
P.O. Box 1450
Alexandria, Virginia 22313-1450
www.uspto.gov

APPLICATION NO.	ISSUE DATE	PATENT NO.	ATTORNEY DOCKET NO.	CONFIRMATION NO.
14/519,727	08/02/2016	9403545	7552/85663	7580

23432 7590 07/13/2016
COOPER & DUNHAM, LLP
30 Rockefeller Plaza
20th Floor
NEW YORK, NY 10112

ISSUE NOTIFICATION

The projected patent number and issue date are specified above.

Determination of Patent Term Adjustment under 35 U.S.C. 154 (b)
(application filed on or after May 29, 2000)

The Patent Term Adjustment is 64 day(s). Any patent to issue from the above-identified application will include an indication of the adjustment on the front page.

If a Continued Prosecution Application (CPA) was filed in the above-identified application, the filing date that determines Patent Term Adjustment is the filing date of the most recent CPA.

Applicant will be able to obtain more detailed information by accessing the Patent Application Information Retrieval (PAIR) WEB site (http://pair.uspto.gov).

Any questions regarding the Patent Term Extension or Adjustment determination should be directed to the Office of Patent Legal Administration at (571)-272-7702. Questions relating to issue and publication fee payments should be directed to the Application Assistance Unit (AAU) of the Office of Data Management (ODM) at (571)-272-4200.

APPLICANT(s) (Please see PAIR WEB site http://pair.uspto.gov for additional applicants):

Ross Pirtle, Commack, NY;

The United States represents the largest, most dynamic marketplace in the world and is an unparalleled location for business investment, innovation, and commercialization of new technologies. The USA offers tremendous resources and advantages for those who invest and manufacture goods here. Through SelectUSA, our nation works to encourage and facilitate business investment. To learn more about why the USA is the best country in the world to develop technology, manufacture products, and grow your business, visit SelectUSA.gov.

WABTEC EX1023